THIS DRAWING IS PROPRIETARY TO HELCO
NO PART OF THIS DRAWING MAY BE REPRODUCED
WITHOUT THE PERMISSION OF HELCO
허가없이 복사할 수 없음

도면번호 DWG. NO HE001021 1/1

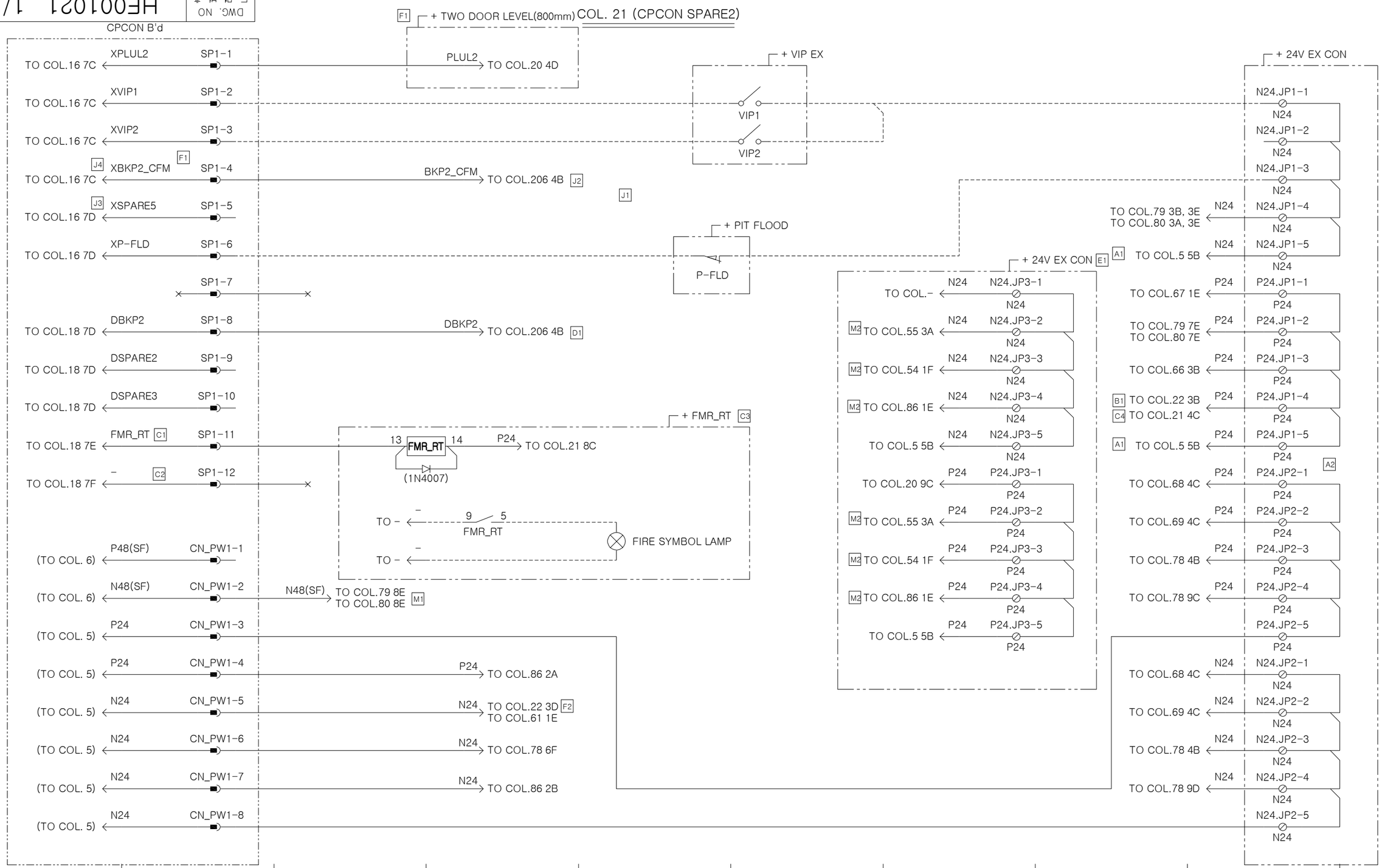

통보처	

CHANGE 개정란

A1	WERE COL.5C (8B)	2020. 07. 07 JHY
A2	WERE JP1 (9D)	실시기안 설시중
B1	WAS NOT ON(8C)	2020. 11. 23 JHY 실시기안 설시중
C1	FMR_RT WAS NOT ON(2C)	2021. 02. 08 JHY 실시기안 설시중
C2	WAS REMOVED(2D)	
C3	WAS NOT ON(5C)	
C4	WAS NOT ON(8C)	
D1	WAS NOT ON(5C)	2021. 04. 26 JHY 실시기안 설시중
E1	WAS NOT ON(8B)	2021. 06. 09 JHY 실시기안 설시중
F1	WAS NOT ON(3A)	2021. 07. 19 JHY 실시기안 설시중
F2	WAS NOT ON(4E)	
J1	MOVLD, MFULL WERE REMOVED(1B,5B)	
J2	WAS NOT ON(4B)	2022. 02. 14 JHY 실시기안 설시중
J3	WAS XMOVLD(1B)	
J4	WAS XMFULL(1B)	
M1	WAS NOT ON(3D)	2022. 07. 12 JHY 실시기안 설시중
M2	WERE NOT ON(7C,7D)	
P1	APPAR. GT-E ADDED	2022. 10. 06 W.R.JUNG 실시기안 다음제작분부터

TOLERANCES—UNLESS OTHERWISE SPECIFIED

SIZE OVER	SIZE TO INCL.	TURN. PNCH'G DIST. OF HOLE STR.	MLDG. DIE CSTG. PRCN.CSTG DRAW.	SH.MET WELD GAS CTG.	CSTG. FORG.
1	4	± 0.1	± 0.2	± 0.3	± 0.5
4	16	± 0.2	± 0.3	± 0.5	± 0.7
16	63	± 0.3	± 0.4	± 0.7	± 0.9
63	250	± 0.4	± 0.6	± 1.2	± 1.3
250	500	± 0.6	± 0.8	± 1.5	± 1.8
500	1000	± 0.8	± 1.0	± 2.0	± 2.5
1000	2000	± 1.1	± 1.5	± 2.5	± 3.3
ANGLE		± 0.25°	± 0.5°	± 1.0°	± 2.0°

HYUNDAI ELEVATOR CO., LTD.

	DRWN BY 제 도	DSND BY 설 계	CHKD BY 검 토	APPD BY 승 인
표 준				
임 시	J.H.Y		LTR	KMS
보 류				
	2019.	01. 01	06/09	06/09

UNIT 단위	MM	APPAR.	GT, GT-R, GT-E
SCALE 척도	N/S	TITLE 제 목	ELEM.W.DIAGRAM
3RD ANGLE 3 각 법			
REF. NO 참고도면		DWG. NO 도면번호	HE001021 1/1

HDW-91-003A

A3 (420mmx297MM)