THIS DRAWING IS PROPRIETARY TO HELCO
NO PART OF THIS DRAWING MAY BE REPRODUCED
WITHOUT THE PERMISSION OF HELCO
허가없이 복사할 수 없음

DWG. NO 도면번호 HE001710 1/1

COL. 210 (+ELD)

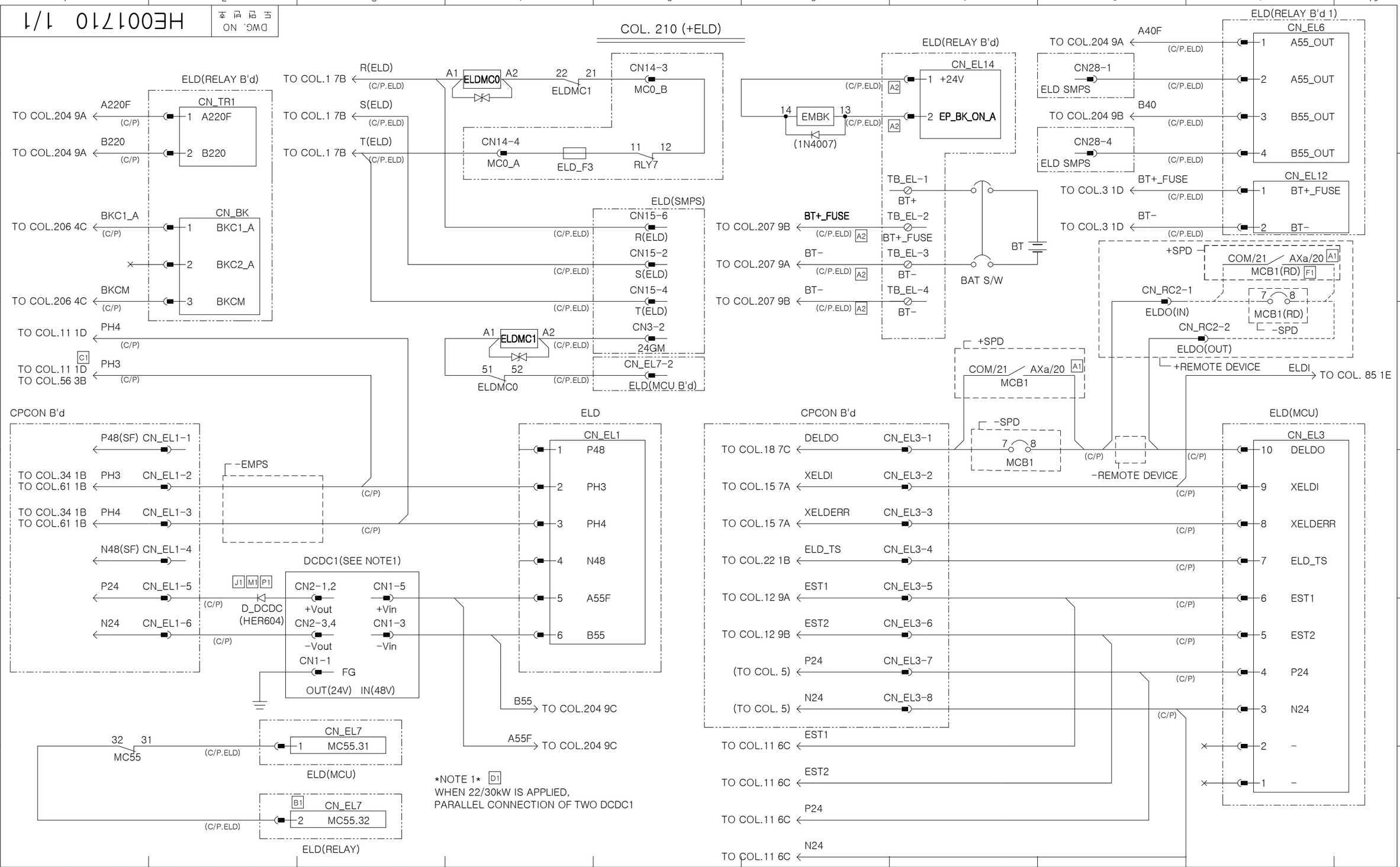

배부처	

CHANGE 개정란

A1	WERE COM/11, Axa/14(8C, 9B)	A	2021. 11. 02 JHY 설시기 설시 중
A2	WERE (C/P)(6A, 6B)		
B1	WAS 1(2F)	B	2022. 03. 29 JHY 설시기 설시 중
C1	WAS NOT ON(1C)	C	2022. 08. 23 JHY 설시기 다음 제작 분 부터
D1	WAS NOT ON (6F)	D	2022. 09. 29 JHY 설시기 설시 중
E1	CHANGE TO APPAR. GT-R	E	2022. 10. 06 W.R.JUNG 설시기 다음제작분 부터
F1	WAS 'MCB1' (9B)	F	2023. 03. 30 KSH 설시기 다음 제작분부터
J1	MC55 81-82 WAS NOT ON(3E)	J	2023. 07. 19 JHY 설시기 재고 소진 후
M1	WAS MC55 81-82(3E)	M	2023. 09. 12 JHY 설시기 재고 소진 후
P1	WAS HER608(3E)	P	2023. 10. 11 JHY 설시기 재고 소진 후

TOLERANCES-UNLESS OTHERWISE SPECIFIED

SIZE OVER	SIZE TO INCL.	TURN. PNCH'G DIST. OF HOLE STR.	MLDG. DIE. CSTG. PRCN. CSTG DRAW.	SH.MET WELD GAS CTG.	CSTG. FORG.
1	4	± 0.1	± 0.2	± 0.3	± 0.5
4	16	± 0.2	± 0.3	± 0.5	± 0.7
16	63	± 0.3	± 0.4	± 0.7	± 0.9
63	250	± 0.4	± 0.6	± 1.2	± 1.3
250	500	± 0.6	± 0.8	± 1.5	± 1.8
500	1000	± 0.8	± 1.0	± 2.0	± 2.5
1000	2000	± 1.1	± 1.5	± 2.5	± 3.3
ANGLE		± 0.25°	± 0.5°	± 1.0°	± 2.0°

HYUNDAI ELEVATOR CO., LTD.

	DRWN BY 제 도	DSND BY 설 계	CHKD BY 검 토	APPD BY 승 인
표 준				
임 시	KSH		LTR	KMS
보 류				
	2021.03.19		03/19	03/19

UNIT 단위	MM	APPAR.	GT-R
SCALE 척도	N/S	TITLE 제 목	ELEM.W.DIAGRAM
3RD ANGLE 3 각 법			
REF. NO 참고도면		DWG. NO 도면번호	HE001710 1/1

HDW-91-003A

A3 (420mmx297MM)