THIS DRAWING IS PROPRIETARY TO HELCO
NO PART OF THIS DRAWING MAY BE REPRODUCED
WITHOUT THE PERMISSION OF HELCO
허가없이 복사할 수 없음

DWG. NO 도면번호 HE001704 1/1

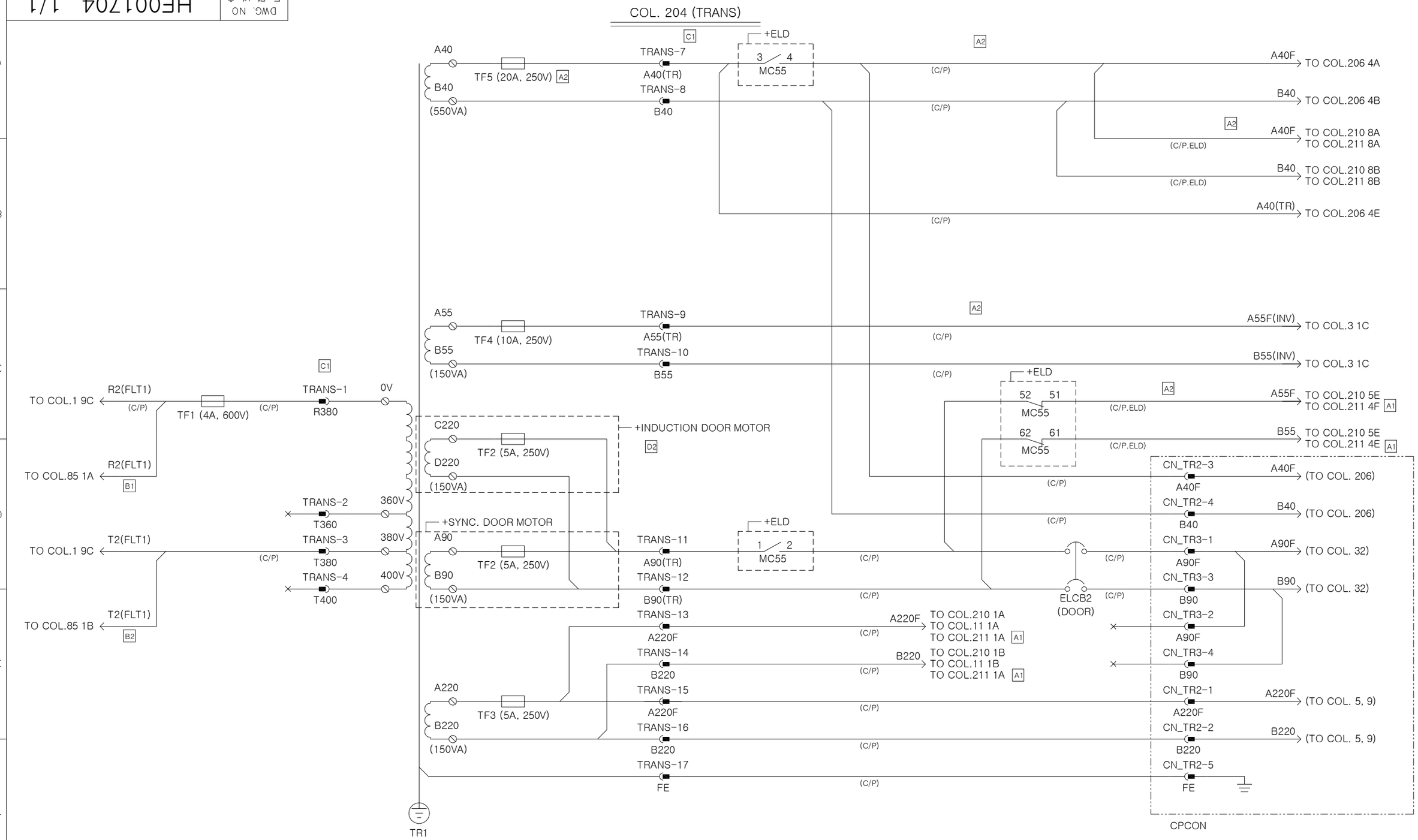

변 경 점	실시기기	실시 중
A1 WERE NOT ON (9C, 7E)	2021. 11. 01 JHY	
A2 WERE NOT ON (7A, 7C, 8B)		
B1 WAS NOT ON (1D)	2022. 03. 31 JHY	
B2 WAS NOT ON (1E)		
C1 TRANS WERE TR1,TR2,TR3(3C,5A)		
D1 CHANGE TO APPAR. GT-R	2022. 10. 06 J.H.Y	
D2 WAS NOT ON(5D)		

CHANGE 개 정 란

배 부 처

TOLERANCES—UNLESS OTHERWISE SPECIFIED

SIZE OVER	SIZE TO INCL.	TURN. PNCH'G DIST. OF HOLE STR.	MLDG. DIE CSTG. PRCN.CSTG DRAW.	SH.MET WELD GAS CTG.	CSTG. FORG.
1	4	± 0.1	± 0.2	± 0.3	± 0.5
4	16	± 0.2	± 0.3	± 0.5	± 0.7
16	63	± 0.3	± 0.4	± 0.7	± 0.9
63	250	± 0.4	± 0.6	± 1.2	± 1.3
250	500	± 0.6	± 0.8	± 1.5	± 1.8
500	1000	± 0.8	± 1.0	± 2.0	± 2.5
1000	2000	± 1.1	± 1.5	± 2.5	± 3.3
ANGLE		± 0.25°	± 0.5°	± 1.0°	± 2.0°

HYUNDAI ELEVATOR CO., LTD.

표 준	DRWN BY 제 도	DSND BY 설 계	CHKD BY 검 토	APPD BY 승 인
임 시 보 류	KSH		LTR	KMS
	2021.03.19		03/19	03/19

UNIT 단위	MM	APPAR.	GT-R
SCALE 척도	N/S	TITLE 제 목	ELEM.W.DIAGRAM
3RD ANGLE 3 각 법			
REF. NO 참고도면		DWG. NO 도면번호	HE001704 1/1

HDW-91-003A

A3 (420mmx297MM)