COL. 51 (HOIST LAMP, CP LAMP)

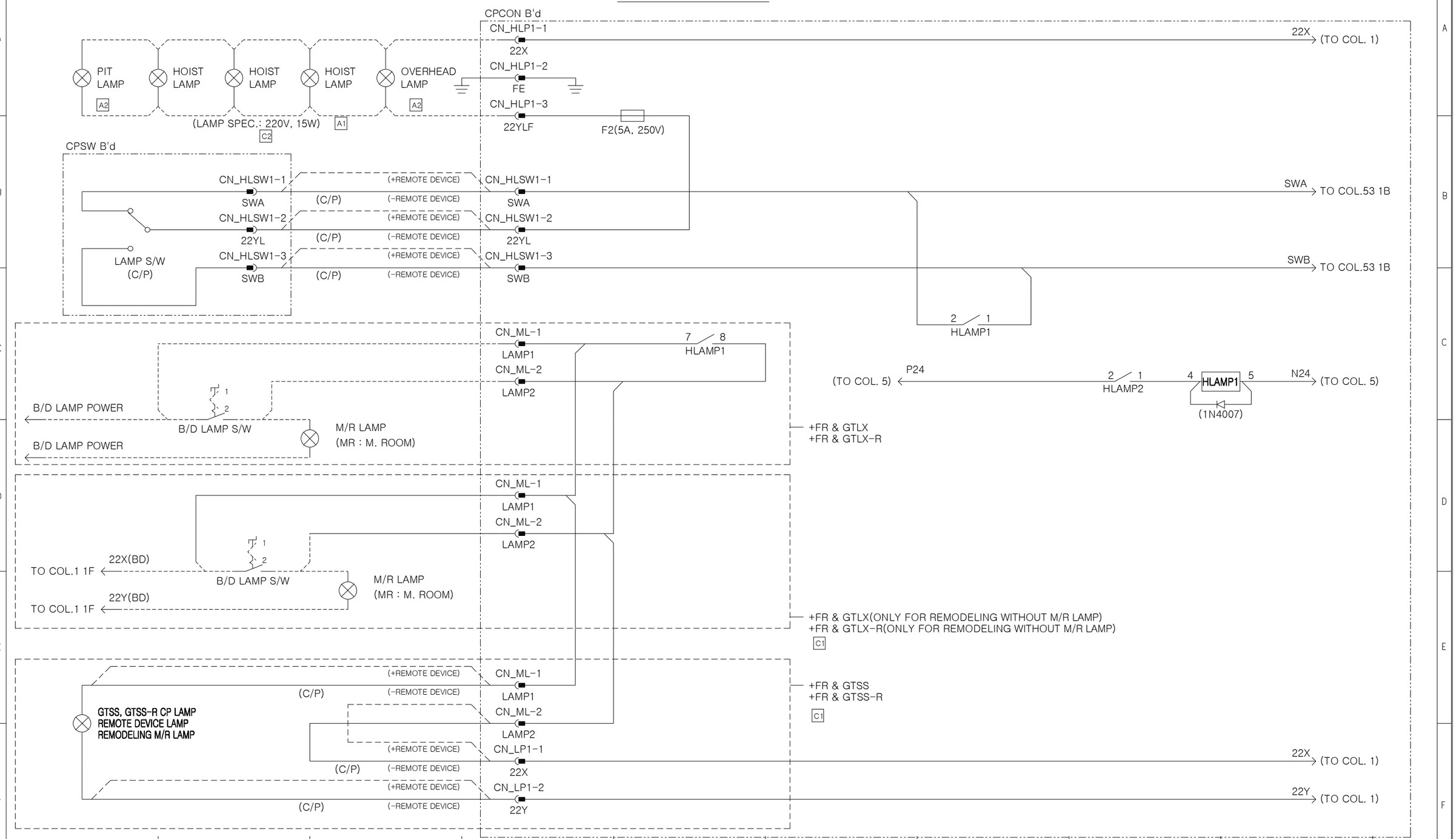

THIS DRAWING IS PROPRIETARY TO HELCO
NO PART OF THIS DRAWING MAY BE REPRODUCED
WITHOUT THE PERMISSION OF HELCO
허가없이 복사할 수 없음

배 부 처

CHANGE 개 정 란		
A1 WAS 10MR (3B) A2 OVERHEAD. PIT LAMP WERE ADDED (1A, 3A)	2020. 10. 20 JHY	A 실시시기 설시 품
B1 WAS NOT ON (4D)	2021. 10. 20 JHY	B 실시시기 설시 품
C1 WERE NOT ON (6E.6F) C2 5MR/1EA WAS REMOVED (2B)	2022. 07. 14 JHY	C 실시시기 설시 품
D1 APPAR. GT-E ADDED	2022. 10. 06 W.R.JUNG	D 실시시기 다음제작분부터

TOLERANCES-UNLESS OTHERWISE SPECIFIED

SIZE OVER	SIZE TO INCL.	TURN. PNCH'G DIST. OF HOLE STR.	MLDG. DIE CSTG. PRCN.CSTG DRAW.	SH.MET WELD GAS CTG.	CSTG. FORG.
1	4	± 0.1	± 0.2	± 0.3	± 0.5
4	16	± 0.2	± 0.3	± 0.5	± 0.7
16	63	± 0.3	± 0.4	± 0.7	± 0.9
63	250	± 0.4	± 0.6	± 1.2	± 1.3
250	500	± 0.6	± 0.8	± 1.5	± 1.8
500	1000	± 0.8	± 1.0	± 2.0	± 2.5
1000	2000	± 1.1	± 1.5	± 2.5	± 3.3
ANGLE		± 0.25°	± 0.5°	± 1.0°	± 2.0°

HYUNDAI ELEVATOR CO., LTD.

표 준 / 임 시 / 보 류	DRWN BY 제 도	DSND BY 설 계	CHKD BY 검 토	APPD BY 승 인
	J.H.Y		LTR	KMS
	2019.	01. 01	06/09	06/09

UNIT 단위	MM	APPAR.	GT, GT-R, GT-E
SCALE 척도	N/S	TITLE 제 목	ELEM.W.DIAGRAM
3RD ANGLE 3 각 법			
REF. NO 참고도면		DWG. NO 도면번호	HE001051 1/1

HDW-91-003A

A3 (420mmx297MM)