COL. 84 (+CARD KEY)

TABLE 1.

NO	OPTION (HHT SET)	FUNCTION	NOTE
1	HELCO STANDARD	MASK FLOOR UNLOCK. MASK FLOOR SETTING : BY HHT	CARD WIRING 1
2	AUTO CALL	MASK FLOOR AUTO CALL. AUTO CALL FLOOR SETTING : STORED IN CARD	CARD WIRING 2
3	AUTO CALL + BTN	MASK FLOOR BUTTON (ENABLE). MASK FLOOR SETTING : STORED IN CARD	CARD WIRING 3
		MASK FLOOR AUTO CALL. AUTO CALL FLOOR SETTING : STORED IN CARD	CARD WIRING 4

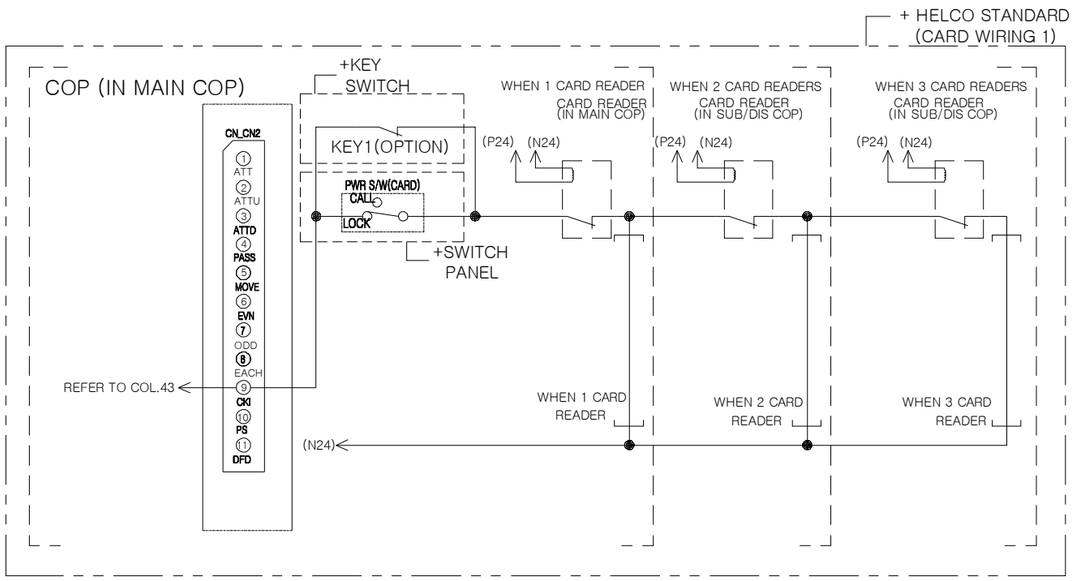

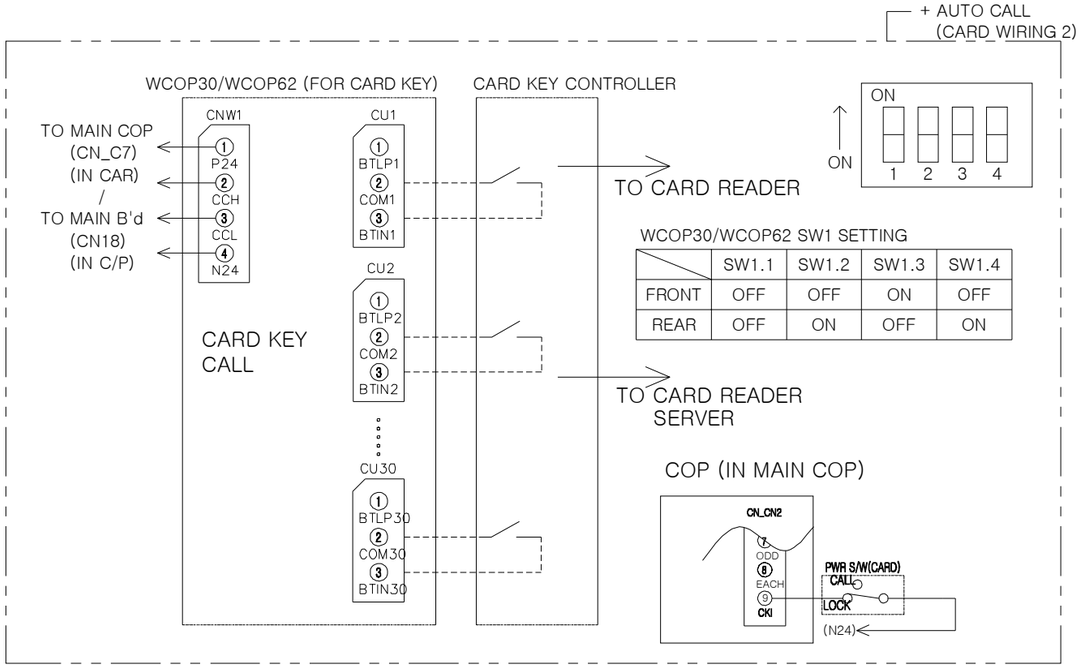

WCOP30/WCOP62 SW1 SETTING

	SW1.1	SW1.2	SW1.3	SW1.4
FRONT	OFF	OFF	ON	OFF
REAR	OFF	ON	OFF	ON

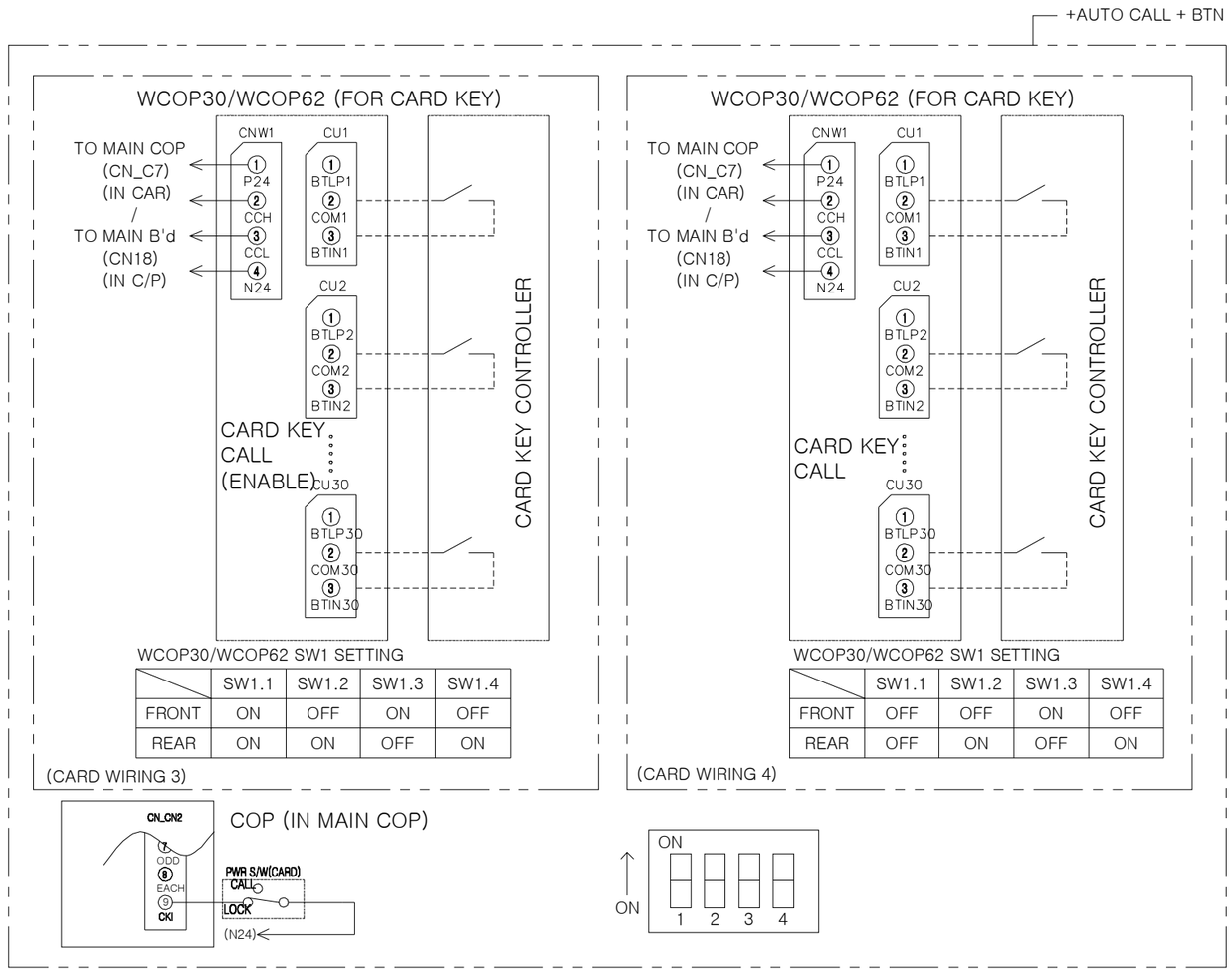

WCOP30/WCOP62 SW1 SETTING

	SW1.1	SW1.2	SW1.3	SW1.4
FRONT	ON	OFF	ON	OFF
REAR	ON	ON	OFF	ON

WCOP30/WCOP62 SW1 SETTING

	SW1.1	SW1.2	SW1.3	SW1.4
FRONT	OFF	OFF	ON	OFF
REAR	OFF	ON	OFF	ON

THIS DRAWING IS PROPRIETARY TO HELCO
NO PART OF THIS DRAWING MAY BE REPRODUCED
WITHOUT THE PERMISSION OF HELCO
허가없이 복사할 수 없음

배 부 처

A	CHANGE 개정란
A1	APPAR. GT-E ADDED 2022. 10. 06 W.R.JUNG
	실시시기 다음제작분부터

TOLERANCES-UNLESS OTHERWISE SPECIFIED

SIZE OVER	SIZE TO INCL.	TURN. PNCH'G DIST.OF HOLE STR.	MLDG. DIE CSTG. PRCN.CSTG DRAW.	SH.MET WELD GAS CTG.	CSTG. FORG.
1	4	± 0.1	± 0.2	± 0.3	± 0.5
4	16	± 0.2	± 0.3	± 0.5	± 0.7
16	63	± 0.3	± 0.4	± 0.7	± 0.9
63	250	± 0.4	± 0.6	± 1.2	± 1.3
250	500	± 0.6	± 0.8	± 1.5	± 1.8
500	1000	± 0.8	± 1.0	± 2.0	± 2.5
1000	2000	± 1.1	± 1.5	± 2.5	± 3.3
ANGLE		± 0.25°	± 0.5°	± 1.0°	± 2.0°

HYUNDAI ELEVATOR CO., LTD.

	DRWN BY 제 도	DSND BY 설 계	CHKD BY 검 토	APPD BY 승 인
표 준				
임 시	J.H.Y		LTR	KMS
보 류				
	2019. 01. 01		06/09	06/09

UNIT 단위	MM	APPAR.	GT, GT-R, GT-E
SCALE 척도	N/S	TITLE 제 목	ELEM.W.DIAGRAM
3RD ANGLE 3 각 법			
REF. NO 참고도면		DWG. NO 도면번호	HE001084 1/1