DWG. NO 도면번호 HE001079 1/1

COL. 79 (ROPE BK)

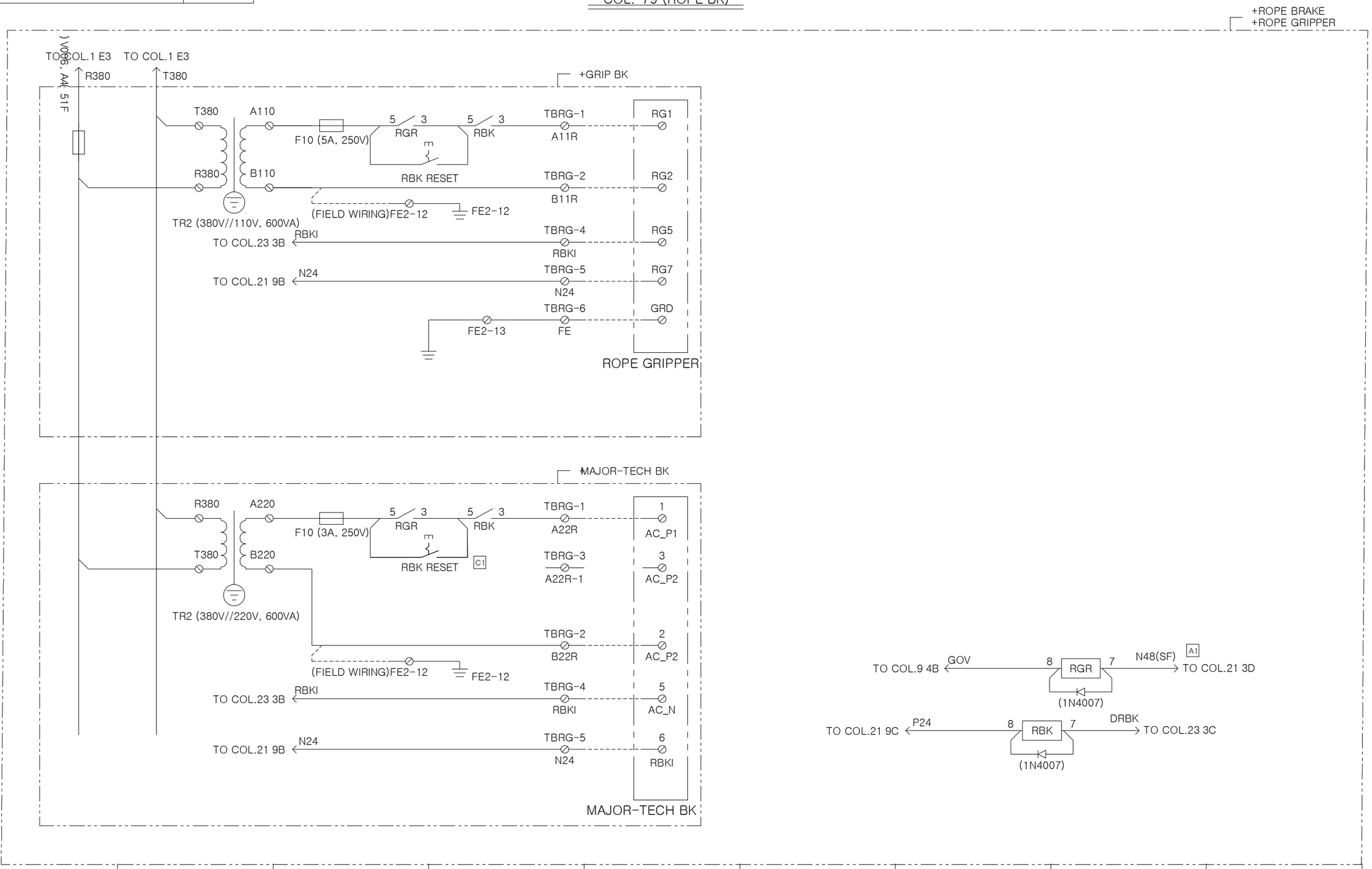

THIS DRAWING IS PROPRIETARY TO HELCO
NO PART OF THIS DRAWING MAY BE REPRODUCED
WITHOUT THE PERMISSION OF HELCO
허가없이 복사할 수 없음

변 경	일 자	내 용
A1	2022. 07. 12 JHY	WAS N110(9E)
B1	2022. 10. 06 W.R.JUNG	APPAR. GTLX-E ADDED
C1	2023. 06. 14 J.H.Y	RGR, RBK RESET WAS MOVED(4D)

CHANGE 개 정 란

도 투 처

TOLERANCES-UNLESS OTHERWISE SPECIFIED

SIZE (OVER)	(TO INCL.)	TURN. PNCH'G DIST.OF HOLE STR.	MLDG. DIE CSTG. PRCN.CSTG DRAW.	SH.MET WELD GAS CTG.	CSTG. FORG.
1	4	± 0.1	± 0.2	± 0.3	± 0.5
4	16	± 0.2	± 0.3	± 0.5	± 0.7
16	63	± 0.3	± 0.4	± 0.7	± 0.9
63	250	± 0.4	± 0.6	± 1.2	± 1.3
250	500	± 0.6	± 0.8	± 1.5	± 1.8
500	1000	± 0.8	± 1.0	± 2.0	± 2.5
1000	2000	± 1.1	± 1.5	± 2.5	± 3.3
ANGLE		± 0.25°	± 0.5°	± 1.0°	± 2.0°

HYUNDAI ELEVATOR CO., LTD.

	DRWN BY 제 도	DSND BY 설 계	CHKD BY 검 토	APPD BY 승 인
표 준				
임 시	J.H.Y		LTR	KMS
보 류				
	2019.	01. 01	06/09	06/09

UNIT 단위	MM	APPAR.	GTLX, GTLX-R, GTLX-E
SCALE 척도	N/S	TITLE 제 목	ELEM.W.DIAGRAM
3RD ANGLE 3 각 법			
REF. NO 참고도면		DWG. NO 도면번호	HE001079 1/1

HDW-91-003A

A3 (420mmx297MM)