DWG. NO 도면번호 HE001086 1/1

COL. 86 (+DPRAM3, +EMON-ONE, +GMON)

NOTE
*REFER TO THE MANUAL(CM-204-8A001) FOR WIRING.

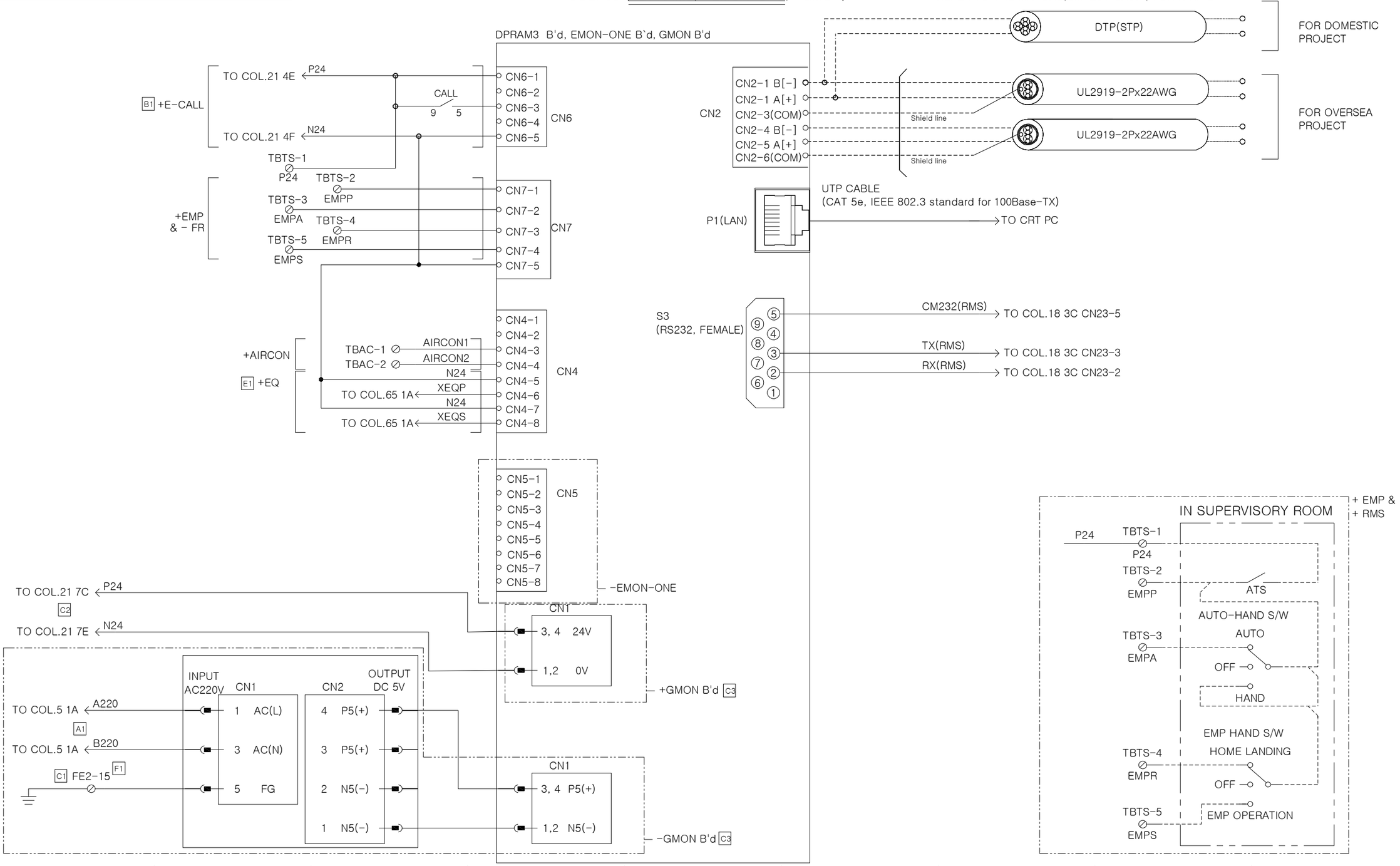

THIS DRAWING IS PROPRIETARY TO HELCO
NO PART OF THIS DRAWING MAY BE REPRODUCED
WITHOUT THE PERMISSION OF HELCO
허가없이 복사할 수 없음

배 부 처

CHANGE 개 정 란	
A1	WERE COL.1 9C (1E)
2020. 07. 07 JHY	A 실시기 실시 중
B1	WAS E CALL(1A)
2021. 04. 01 JHY	B 실시기 실시 중
C1	WAS FE-19(1A)
C2	WERE NOT ON(1E)
C3	WERE NOT ON(5E,5F)
2022. 06. 27 JHY	C 실시기 실시 중
D1	APPAR. GT-E ADDED
2022. 10. 06 W.R.JUNG	D 실시기 다음제작분부터
E1	CN4-8 WAS CHANGED (XEQP->XEQS, SMART EQ DEL) (2C)
2023. 06. 07 H.J.NAM	E 실시기 다음제작분부터
F1	WAS 'FE2-14' (1F)
2023. 08. 09 H.C.NOH	F 실시기 다음제작분부터

TOLERANCES-UNLESS OTHERWISE SPECIFIED

SIZE (OVER / TO INCL.)		TURN. PNCH'G DIST.OF HOLE STR.	MLDG. DIE CSTG. PRCN.CSTG DRAW.	SH.MET WELD GAS CTG.	CSTG. FORG.
1	4	± 0.1	± 0.2	± 0.3	± 0.5
4	16	± 0.2	± 0.3	± 0.5	± 0.7
16	63	± 0.3	± 0.4	± 0.7	± 0.9
63	250	± 0.4	± 0.6	± 1.2	± 1.3
250	500	± 0.6	± 0.8	± 1.5	± 1.8
500	1000	± 0.8	± 1.0	± 2.0	± 2.5
1000	2000	± 1.1	± 1.5	± 2.5	± 3.3
ANGLE		± 0.25°	± 0.5°	± 1.0°	± 2.0°

HYUNDAI ELEVATOR CO., LTD.

표 준	DRWN BY 제 도	DSND BY 설 계	CHKD BY 검 토	APPD BY 승 인
임 시 보 류	J.H.Y		LTR	KMS
	2019.	01. 01	06/09	06/09

UNIT 단위	MM	APPAR.	GT, GT-R, GT-E
SCALE 척도	N/S	TITLE 제 목	ELEM.W.DIAGRAM
3RD ANGLE 3 각 법			
REF. NO 참고도면		DWG. NO 도면번호	HE001086 1/1

HDW-91-003A

A3 (420mmx297MM)