DWG. NO 도면번호 HE001095 1/1

COL. 95 (SLD SW INSTALL LENGTH)

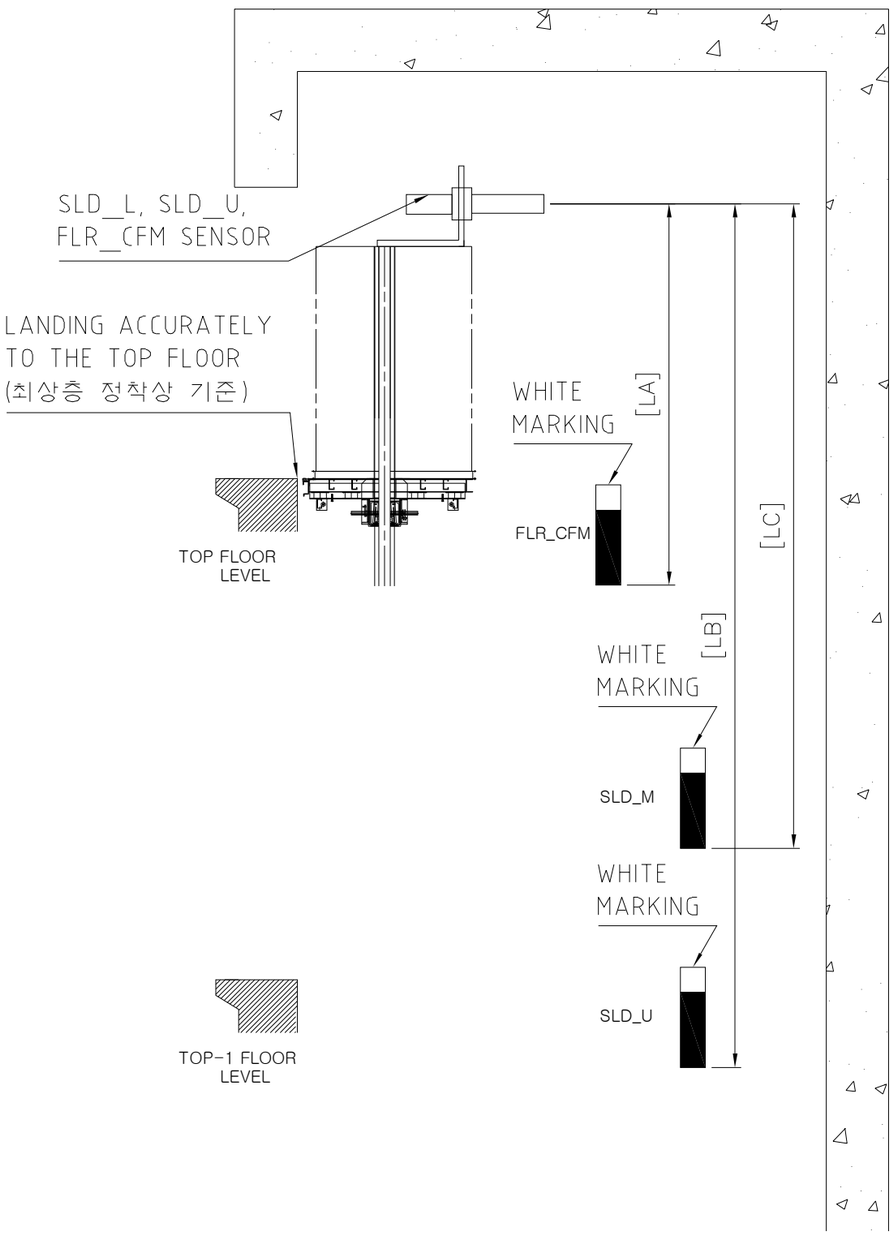

SENSOR & MAGNETIC INSTALL LAYOUT (TOP VIEW)

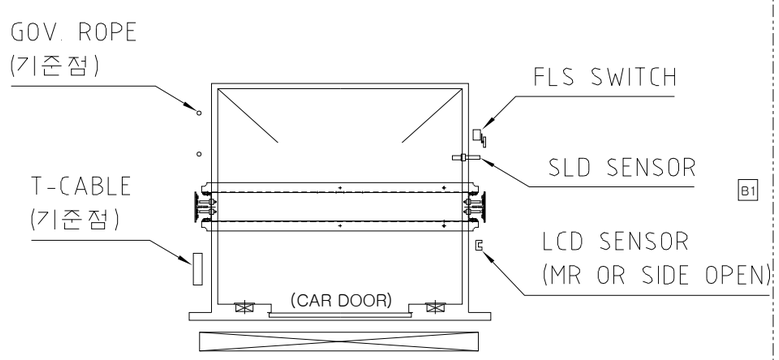

BASED ON THE LOCATION WHERE GOV. ROPE IS INSTALLED.
(가버너 로프 설치 위치를 기준점으로 잡는다.)
예 GOV 로프가 왼쪽일 경우, FLS&LCD SENSOR는 오른쪽에 위치.
(WHEN GOV ROPE POSITION IS LEFT, FLS&LCD SENSOR POSITIONS ARE RIGHT)

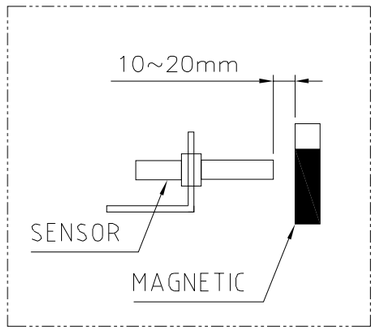

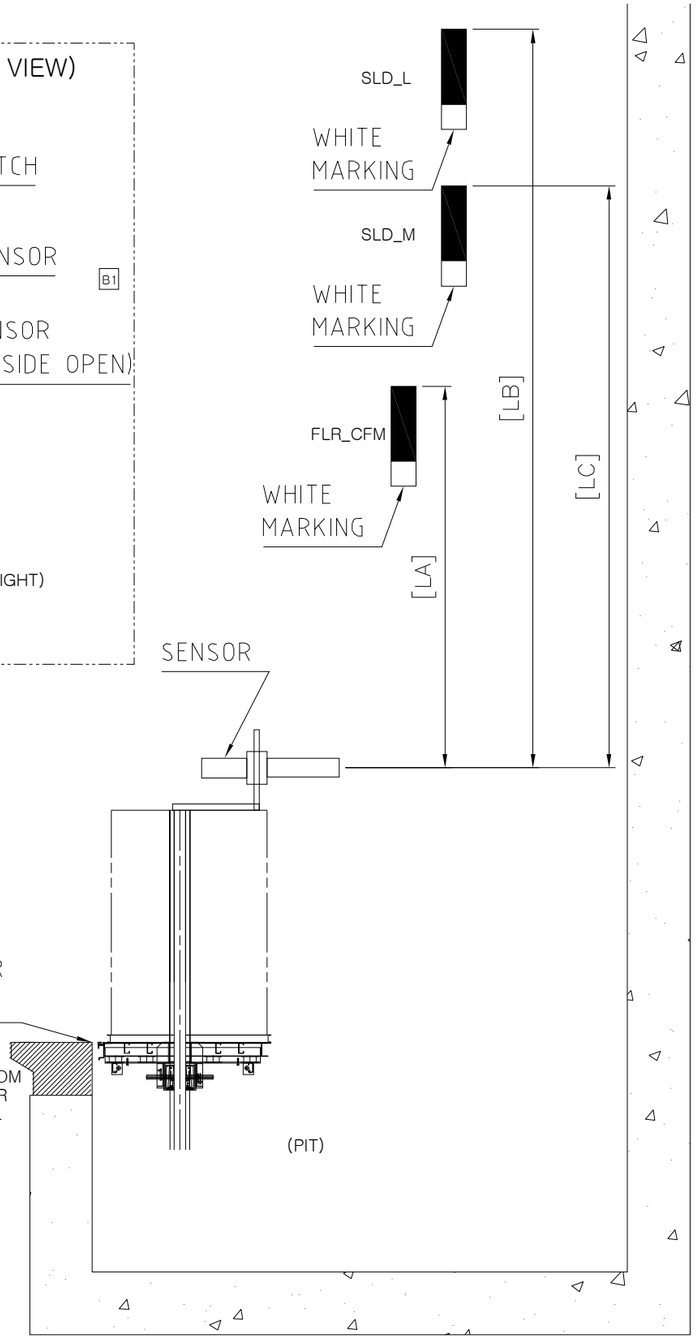

*LENGTH TABLE

SPEED	[LA]	[LB]	[LC]	TOLERANCE
30M/Min	650	650		±100
45M/Min	1050	1050		
60M/Min	1500	1500		
90M/Min	1500	3000		
105M/Min	1500	4000		
120M/Min	1500	5000		
150M/Min	1500	7500	5000	
180M/Min	1500	10500	7500	

THIS DRAWING IS PROPRIETARY TO HELCO
NO PART OF THIS DRAWING MAY BE REPRODUCED
WITHOUT THE PERMISSION OF HELCO
허가없이 복사할 수 없음

배 부 처

A1	XSLD_M WAS NOT ON	2021. 07. 19 JHY	설시기 설시홍
B1	SLD SENSOR AND LCD SENSOR POSITION WERE SWITCHED(7B)	2021. 11. 03 JHY	설시기 설시홍
C1	APPAR. GT-E ADDED	2022. 10. 06 W.R.JUNG	설시기 다음제작분부터

CHANGE 개 정 란

TOLERANCES—UNLESS OTHERWISE SPECIFIED

SIZE OVER	SIZE TO INCL.	TURN. PNCH'G DIST. OF HOLE STR.	MLDG. DIE CSTG. PRCN.CSTG DRAW.	SH.MET WELD GAS CTG.	CSTG. FORG.
1	4	± 0.1	± 0.2	± 0.3	± 0.5
4	16	± 0.2	± 0.3	± 0.5	± 0.7
16	63	± 0.3	± 0.4	± 0.7	± 0.9
63	250	± 0.4	± 0.6	± 1.2	± 1.3
250	500	± 0.6	± 0.8	± 1.5	± 1.8
500	1000	± 0.8	± 1.0	± 2.0	± 2.5
1000	2000	± 1.1	± 1.5	± 2.5	± 3.3
ANGLE		± 0.25°	± 0.5°	± 1.0°	± 2.0°

HYUNDAI ELEVATOR CO., LTD.

표 준 / 임 시 / 보 류	DRWN BY 제 도	DSND BY 설 계	CHKD BY 검 토	APPD BY 승 인
	J.H.Y		LTR	KMS
	2019.	01. 01	06/09	06/09

UNIT 단위	MM	APPAR.	GT, GT-R, GT-E
SCALE 척도	N/S	TITLE 제 목	ELEM.W.DIAGRAM
3RD ANGLE 3 각 법			
REF. NO 참고도면		DWG. NO 도면번호	HE001095 1/1

HDW-91-003A

A3 (420mmx297MM)