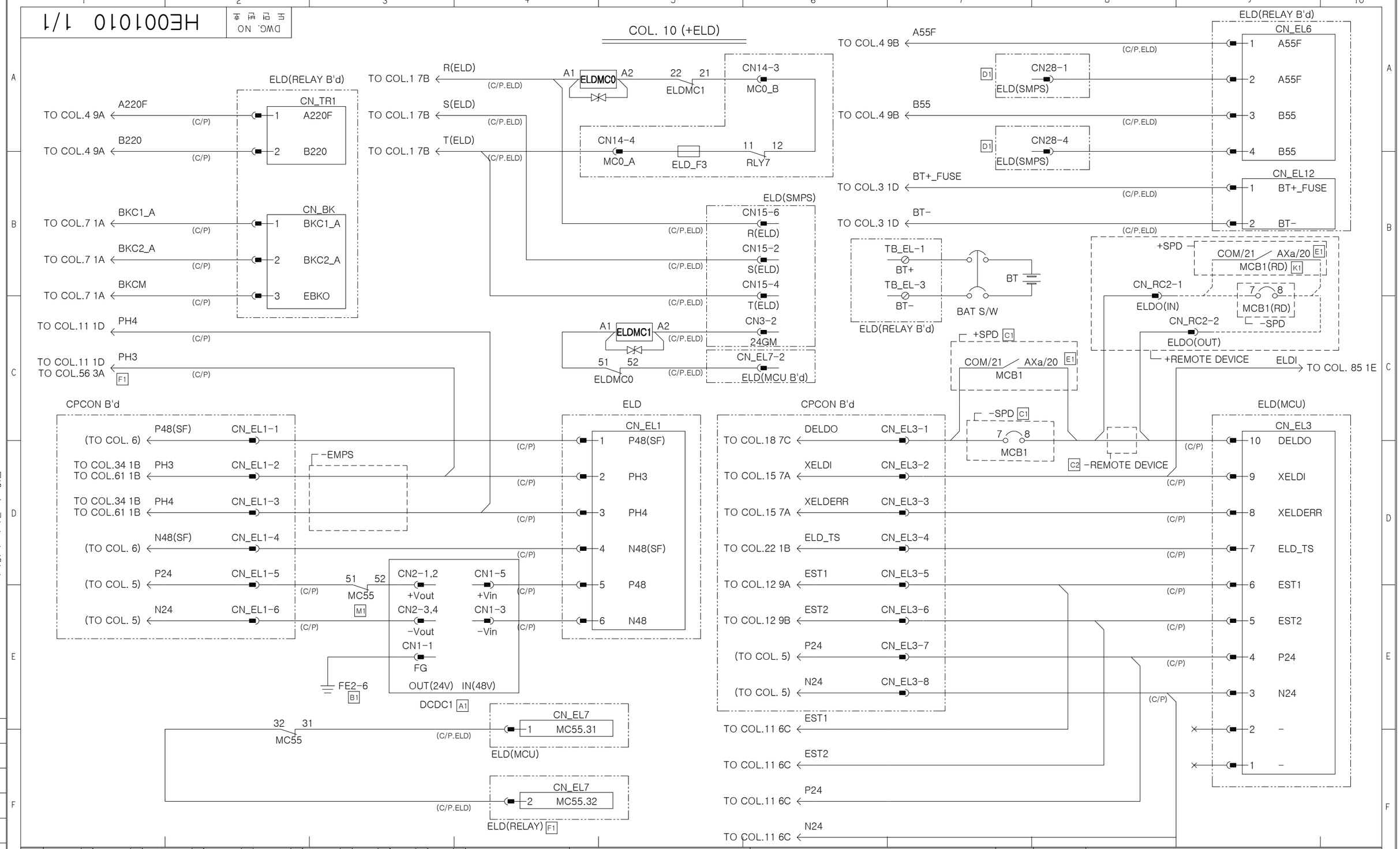

THIS DRAWING IS PROPRIETARY TO HELCO
NO PART OF THIS DRAWING MAY BE REPRODUCED
WITHOUT THE PERMISSION OF HELCO
허가없이 복사할 수 없음

변경점	실시기	실시 중
A1 DCDC1 WAS TERMINAL LUG (3E)	2021. 02. 18 JHY	
B1 WAS NOT ON (2E)	2021. 03. 25 JHY	
C1 +SPD,-SPD WERE NOT ON (7C) C2 +REMOTE DEVICE,-REMOTE DEVICE WERE NOT ON (8B,8D)	2021. 06. 29 JHY	즉시 실시
D1 ALL REVISED	2021. 08. 25 JHY	
E1 WERE COM/11, Axa/14(8C, 9B)	2021. 11. 02 JHY	
F1 WAS NOT ON(1C)	2022. 03. 29 JHY	
J1 APPAR. GT-E ADDED	2022. 10. 06 W.R.JUNG	다음제작분부터
K1 WAS 'MCB1' (9B)	2023. 03. 30 KSH	다음 제작분부터
M1 MC55 81-82 WAS NOT ON(3E)	2023. 07. 19 JHY	재고소진 후

TOLERANCES-UNLESS OTHERWISE SPECIFIED

SIZE OVER	SIZE TO INCL.	TURN. PNCH'G DIST. OF HOLE STR.	MLDG. DIE CSTG. PRCN.CSTG DRAW.	SH.MET WELD GAS CTG.	CSTG. FORG.
1	4	± 0.1	± 0.2	± 0.3	± 0.5
4	16	± 0.2	± 0.3	± 0.5	± 0.7
16	63	± 0.3	± 0.4	± 0.7	± 0.9
63	250	± 0.4	± 0.6	± 1.2	± 1.3
250	500	± 0.6	± 0.8	± 1.5	± 1.8
500	1000	± 0.8	± 1.0	± 2.0	± 2.5
1000	2000	± 1.1	± 1.5	± 2.5	± 3.3
ANGLE		± 0.25°	± 0.5°	± 1.0°	± 2.0°

HYUNDAI ELEVATOR CO., LTD.

표준	DRWN BY 제도	DSND BY 설계	CHKD BY 검토	APPD BY 승인
임시 보류	J.H.Y		LTR	KMS
	2019.	01. 01	06/09	06/09

UNIT 단위	MM	APPAR.	GT, GT-E
SCALE 척도	N/S	TITLE 제목	ELEM.W.DIAGRAM
3RD ANGLE 3 각 법			
REF. NO 참고도면		DWG. NO 도면번호	HE001010 1/1

복부처

HDW-91-003A

A3 (420mmx297MM)