DWG. NO 도면번호 HE001052 1/1

COL. 52 (PIT REMOTE CON)

NOTE B1 E2
IF PTLD, BUF.CWT, CMP.RP ARE NOT APPLIED
REPLACE WITH INSTALL JUMPER CONNECTOR

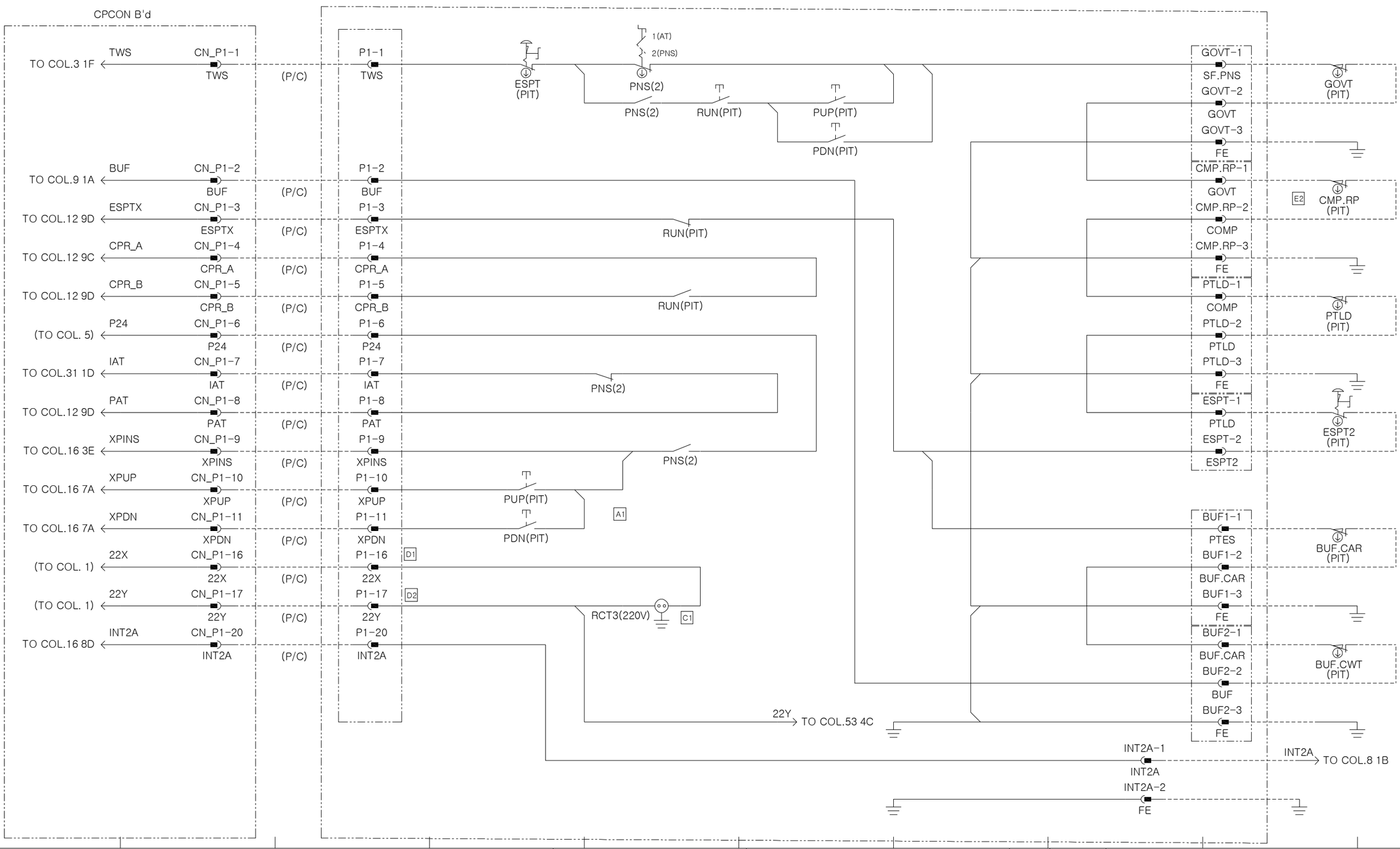

THIS DRAWING IS PROPRIETARY TO HELCO
NO PART OF THIS DRAWING MAY BE REPRODUCED
WITHOUT THE PERMISSION OF HELCO
허가없이 복사할 수 없음

배 부 처

CHANGE 개 정 란		
A1	PUP.PDN COM. WERE P24(5D)	2020. 08. 06 JHY 설시기 설시 홍
B1	WAS NOT ON(9A)	2021. 05. 07 JHY 설시기 설시 홍
C1	WAS RCT1 (5E)	2021. 05. 07 JHY 설시기 설시 홍
D1	WAS P1-12 (3D)	2021. 10. 06 JHY 설시기 설시 홍
D2	WAS P1-13 (3E)	
E1	WAS NOT ON (9A)	2022. 01. 03 JHY 설시기 설시 홍
E2	WAS NOT ON (9B)	
F1	APPAR. GT-E ADDED	2022. 10. 06 W.R.JUNG 설시기 대흥제작분부터

TOLERANCES-UNLESS OTHERWISE SPECIFIED

SIZE OVER	SIZE TO INCL.	TURN. PNCH'G DIST. OF HOLE STR.	MLDG. DIE CSTG. PRCN.CSTG DRAW.	SH.MET WELD GAS CTG.	CSTG. FORG.
1	4	± 0.1	± 0.2	± 0.3	± 0.5
4	16	± 0.2	± 0.3	± 0.5	± 0.7
16	63	± 0.3	± 0.4	± 0.7	± 0.9
63	250	± 0.4	± 0.6	± 1.2	± 1.3
250	500	± 0.6	± 0.8	± 1.5	± 1.8
500	1000	± 0.8	± 1.0	± 2.0	± 2.5
1000	2000	± 1.1	± 1.5	± 2.5	± 3.3
ANGLE		± 0.25°	± 0.5°	± 1.0°	± 2.0°

HYUNDAI ELEVATOR CO., LTD.

표 준	DRWN BY 제 도	DSND BY 설 계	CHKD BY 검 토	APPD BY 승 인
임 시 / 보 류	J.H.Y		LTR	KMS
	2019.	01. 01	06/09	06/09

UNIT 단위	MM	APPAR.	GT, GT-R, GT-E
SCALE 척도	N/S	TITLE 제 목	ELEM.W.DIAGRAM
3RD ANGLE 3 각 법			
REF. NO 참고도면		DWG. NO 도면번호	HE001052 1/1

HDW-91-003A

A3 (420mmx297MM)