THIS DRAWING IS PROPRIETARY TO HELCO
NO PART OF THIS DRAWING MAY BE REPRODUCED
WITHOUT THE PERMISSION OF HELCO
허가없이 복사할 수 없음

DWG. NO 도면번호 HE001711 1/1

COL. 211 (+ELD & GTSS 22/30)

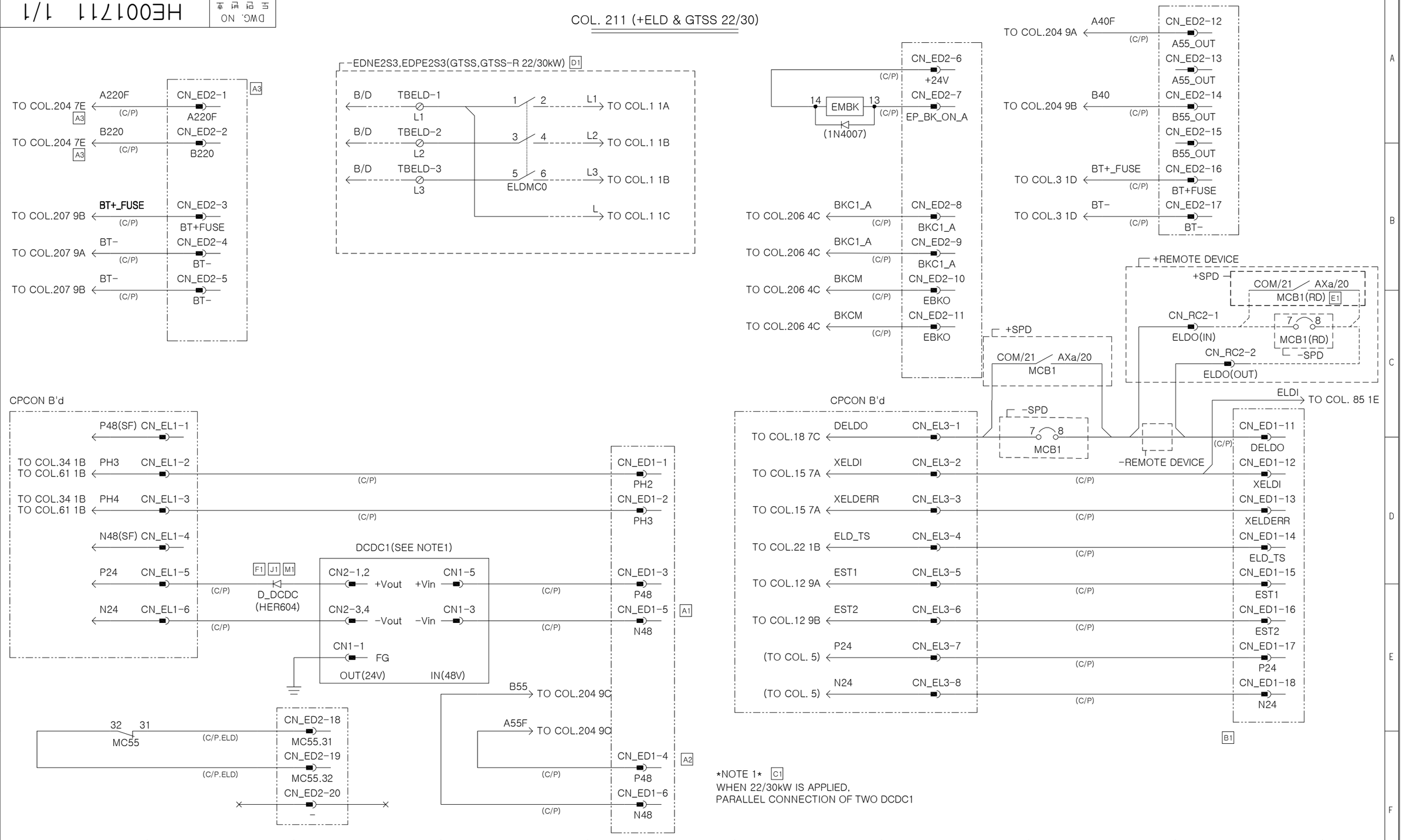

NOTE 1 C1
WHEN 22/30kW IS APPLIED,
PARALLEL CONNECTION OF TWO DCDC1

배부처	

CHANGE 개정란

A1	WAS CN_ED1-4 (5E)	실시시기 설시 중	A
A2	WAS CN_ED1-5 (5F)		
A3	WAS COL.204 9A (1A)		
A4	WAS CN_ED1-5 (5F)		
A5	CN_ED2-1-5 WERE ADDED(2A)		
A6	SPD, REMOTE DEVICE OPTION WERE ADDED(8B, 8C, 8D)		
		2021. 11. 01 JHY	
B1	WAS NOT ON (9F)	실시시기 설시 중	B
		2022. 04. 11 JHY	
C1	WAS NOT ON (6F)	실시시기 설시 중	C
		2022. 09. 29 JHY	
D1	WAS NOT ON (4A)	실시시기 설시 중	D
		2023. 03. 03 JHY	
E1	WAS 'MCB1'(10C)	실시시기 설시 중	E
		2023. 03. 30 KSH	
F1	MC55 81-82 WAS NOT ON(3E)	실시시기 다음 제작분부터	F
		2023. 07. 19 JHY	
J1	WAS MC55 81-82(3E)	실시시기 제고 소진 후	J
		2023. 09. 12 JHY	
M1	WAS HER608(3E)	실시시기 제고 소진 후	M
		2023. 10. 11 JHY	

TOLERANCES-UNLESS OTHERWISE SPECIFIED

SIZE OVER	SIZE TO INCL.	TURN. PNCH'G DIST. OF HOLE STR.	MLDG. DIE CSTG. PRCN.CSTG DRAW.	SH.MET WELD GAS CTG.	CSTG. FORG.
1	4	± 0.1	± 0.2	± 0.3	± 0.5
4	16	± 0.2	± 0.3	± 0.5	± 0.7
16	63	± 0.3	± 0.4	± 0.7	± 0.9
63	250	± 0.4	± 0.6	± 1.2	± 1.3
250	500	± 0.6	± 0.8	± 1.5	± 1.8
500	1000	± 0.8	± 1.0	± 2.0	± 2.5
1000	2000	± 1.1	± 1.5	± 2.5	± 3.3
ANGLE		± 0.25°	± 0.5°	± 1.0°	± 2.0°

HYUNDAI ELEVATOR CO., LTD.

	DRWN BY 제 도	DSND BY 설 계	CHKD BY 검 토	APPD BY 승 인
표 준				
임 시	JHY		LTR	KMS
보 류				
	2021.08.20		08/20	08/20

UNIT 단위	MM	APPAR.	GTSS-R(22/30kW)
SCALE 척도	N/S	TITLE 제 목	ELEM.W.DIAGRAM
3RD ANGLE 3 각 법			
REF. NO 참고도면		DWG. NO 도면번호	HE001711 1/1

HDW-91-003A

A3 (420mmx297MM)