COL. 38 (CAR TOP 8)

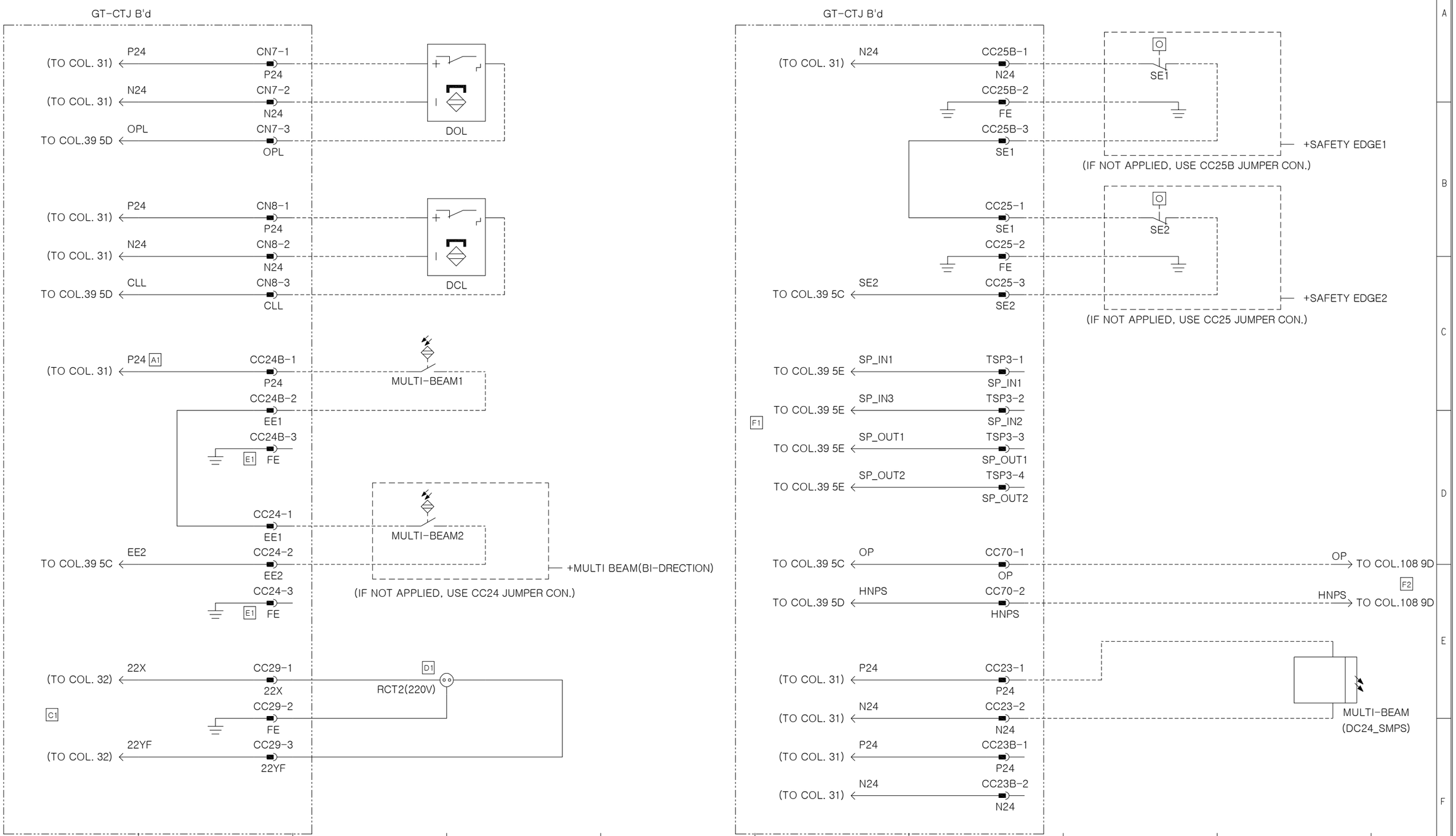

THIS DRAWING IS PROPRIETARY TO HELCO
NO PART OF THIS DRAWING MAY BE REPRODUCED
WITHOUT THE PERMISSION OF HELCO
허가없이 복사할 수 없음

변경	일자	내용
A1	2021. 02. 22 JHY	WAS N24(1C) 실시기준 적용
B1	2021. 02. 22 JHY	WAS N24(1C) 실시기준 적용
C1		WERE COL.33 (1E,1F)
C2		TSP2 WERE ADDED (6C)
	2021. 03. 11 JHY	실시기준 적용
D1		WAS NOT ON (3E)
	2021. 07. 05 JHY	실시기준 적용
E1		WERE N24 (2D, 2E)
	2021. 09. 08 JHY	실시기준 적용
F1		WERE COL.34 5B (6D)
F2		WAS NOT ON (9E)
	2022. 09. 27 JHY	실시기준 적용
J1		APPAR. GT-E ADDED
	2022. 10. 06 W.R.JUNG	실시기준 다음제작분부터

CHANGE 개정란

TOLERANCES—UNLESS OTHERWISE SPECIFIED					
SIZE (OVER / TO INCL.)	WORK: TURN. PNCH'G DIST. OF HOLE STR.	MLDG. DIE CSTG. PRCN.CSTG DRAW.	SH.MET WELD GAS CTG.	CSTG. FORG.
1 / 4	± 0.1	± 0.2	± 0.3	± 0.5
4 / 16	± 0.2	± 0.3	± 0.5	± 0.7
16 / 63	± 0.3	± 0.4	± 0.7	± 0.9
63 / 250	± 0.4	± 0.6	± 1.2	± 1.3
250 / 500	± 0.6	± 0.8	± 1.5	± 1.8
500 / 1000	± 0.8	± 1.0	± 2.0	± 2.5
1000 / 2000	± 1.1	± 1.5	± 2.5	± 3.3
ANGLE	± 0.25°	± 0.5°	± 1.0°	± 2.0°

HYUNDAI ELEVATOR CO., LTD.

표준 / 임시 / 보류	DRWN BY 제도	DSND BY 설계	CHKD BY 검토	APPD BY 승인
	J.H.Y		LTR	KMS
	2019.	01. 01	06/09	06/09

UNIT 단위	MM	APPAR.	GT, GT-R, GT-E
SCALE 척도	N/S	TITLE 제목	ELEM.W.DIAGRAM
3RD ANGLE 3 각 법			
REF. NO 참고도면		DWG. NO 도면번호	HE001038 1/1