DWG. NO 도면번호 HE001036 1/1

COL. 36 (CAR TOP 6)

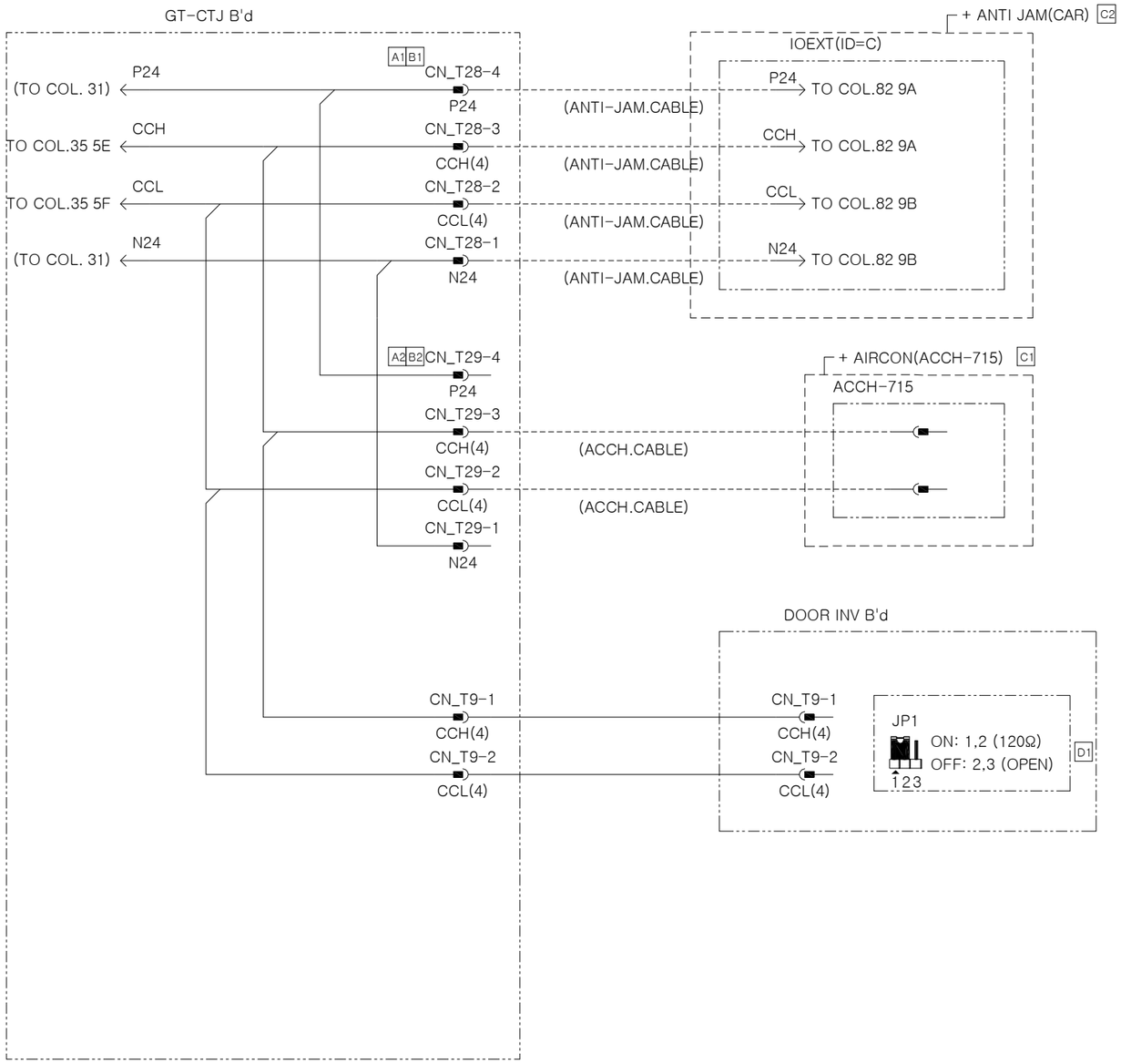

THIS DRAWING IS PROPRIETARY TO HELCO
NO PART OF THIS DRAWING MAY BE REPRODUCED
WITHOUT THE PERMISSION OF HELCO
허가없이 복사할 수 없음

변경	내용	일자	작성
A1	WAS CN_T21(3A)	2020. 08. 07	JHY
A2	WAS CN_T22(3B)		
B1	WAS CN_T25(3A)	2020. 09. 03	JHY
B2	WAS CN_T27(3C)		
C1	+AIRCON WAS NOT ON (5C)	2020. 11. 23	JHY
C2	+ANTI JAM WAS NOT ON (6A)		
D1	WAS NOT ON (6D)	2022. 07. 04	JHY
E1	APPAR. GT-E ADDED	2022. 10. 06	W.R.JUNG

CHANGE 개정란

복사처

TOLERANCES-UNLESS OTHERWISE SPECIFIED

SIZE OVER	SIZE TO INCL.	TURN. PNCH'G DIST. OF HOLE STR.	MLDG. DIE CSTG. PRCN.CSTG DRAW.	SH.MET WELD GAS CTG.	CSTG. FORG.
1	4	± 0.1	± 0.2	± 0.3	± 0.5
4	16	± 0.2	± 0.3	± 0.5	± 0.7
16	63	± 0.3	± 0.4	± 0.7	± 0.9
63	250	± 0.4	± 0.6	± 1.2	± 1.3
250	500	± 0.6	± 0.8	± 1.5	± 1.8
500	1000	± 0.8	± 1.0	± 2.0	± 2.5
1000	2000	± 1.1	± 1.5	± 2.5	± 3.3
ANGLE		± 0.25°	± 0.5°	± 1.0°	± 2.0°

HYUNDAI ELEVATOR CO., LTD.

표준	DRWN BY 제도	DSND BY 설계	CHKD BY 검토	APPD BY 승인
임시 보류	J.H.Y		LTR	KMS
	2019.	01. 01	06/09	06/09

UNIT 단위	MM	APPAR.	GT, GT-R, GT-E
SCALE 척도	N/S	TITLE 제목	ELEM.W.DIAGRAM
3RD ANGLE 3각법			
REF. NO 참고도면		DWG. NO 도면번호	HE001036 1/1

HDW-91-003A

A3 (420mmx297MM)