THAMES COROMANDEL DISTRICT COUNCIL

A copy of the Approved Plans must be on-site at all times

APPROVED
ABA20250557
Thames-Coromandel
District Council

APPROVED
ABA20250557
Thames-Coromandel
District Council

Owner J L Berge and T N Berge 457 Thames Coast Road RD5 Thames
Lot 1 DPS 22735

Iron roof wooden floor

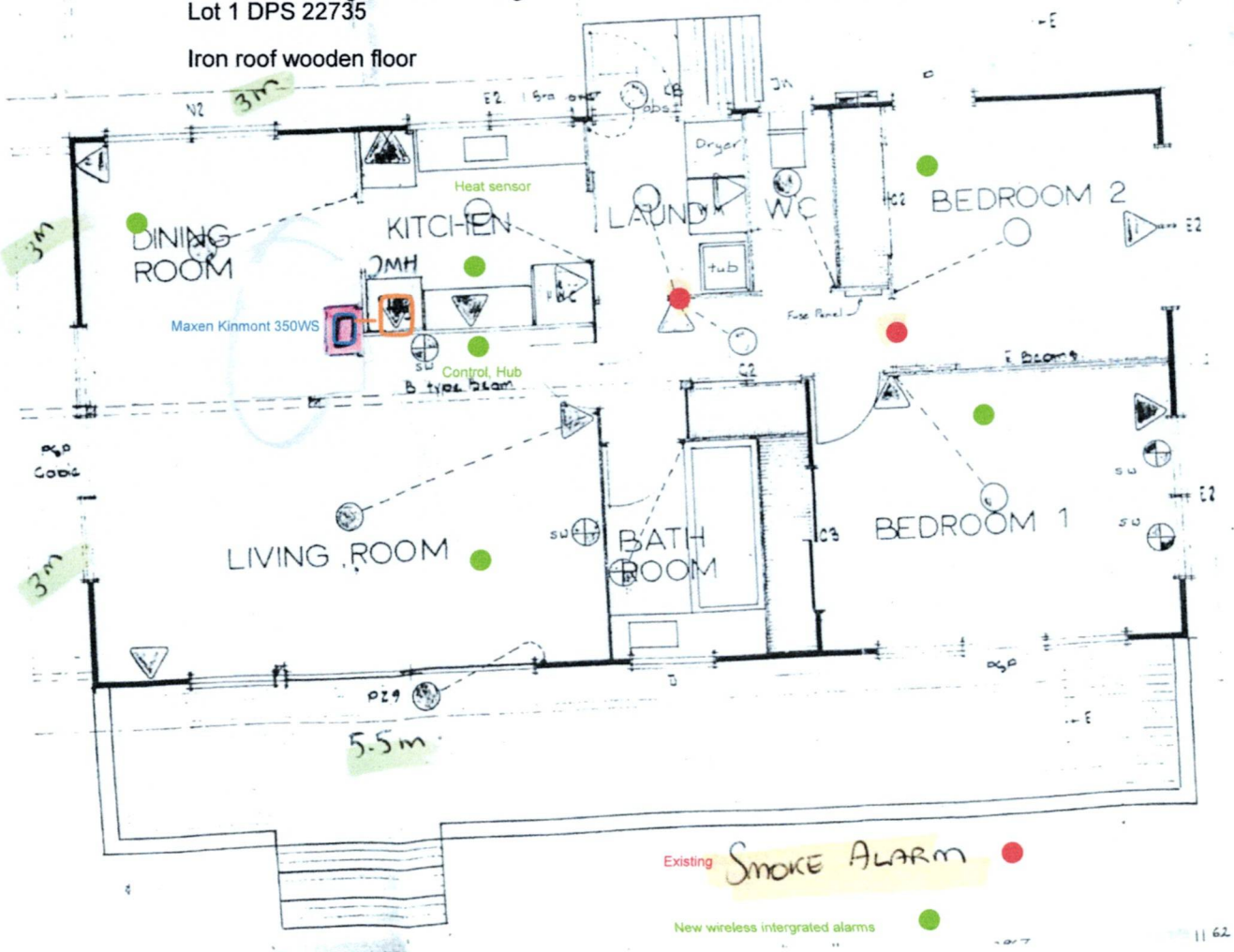

Owner J L Burge & T N Burge, 457 Thames Coast Road RD5 Thames 3575
Lot 1 DPS 33735
Iron Roof Wooden floor
replace existing flue and add bracing
Roof pitch 10 degrees
APPROVED
ABA20250557
Thames-Coromandel
District Council

steel&tube

Roofing
Residential Detail
Trimline

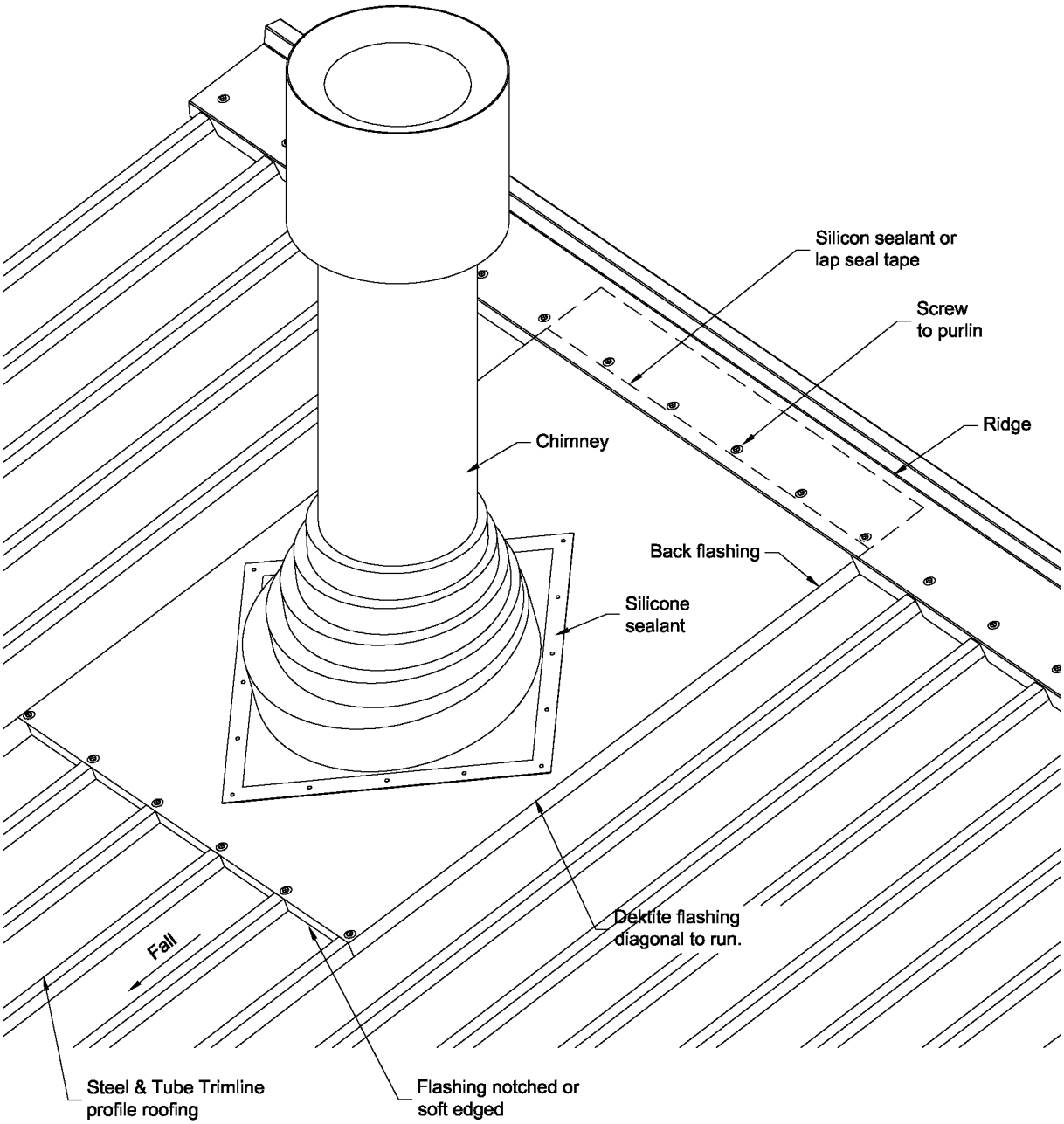

Note: Soft edged flashings to be colour matched prior to installation.

APPROVED
ABA20250557
Thames-Coromandel
District Council

ribb_trimline-chim_round_ridge

Rib Profile Chimney Flashing - Round Flue

All dimensions in millimetres
Scale 1:10
16/01/12

© 2012. The copyright of this document is the property of Steel & Tube Holdings Limited and shall not be reproduced, copied, loaned or disposed of directly, or indirectly, nor used for any purpose other than that for which it is specifically furnished without prior consent.

www.steelandtube.co.nz
Technical helpline 0800 333 247

Quick Code: QA19

Amend 5 Feb 2004

Figure 15: Wet-back Installation – Open Vented System
Paragraph 6.13.1 a)

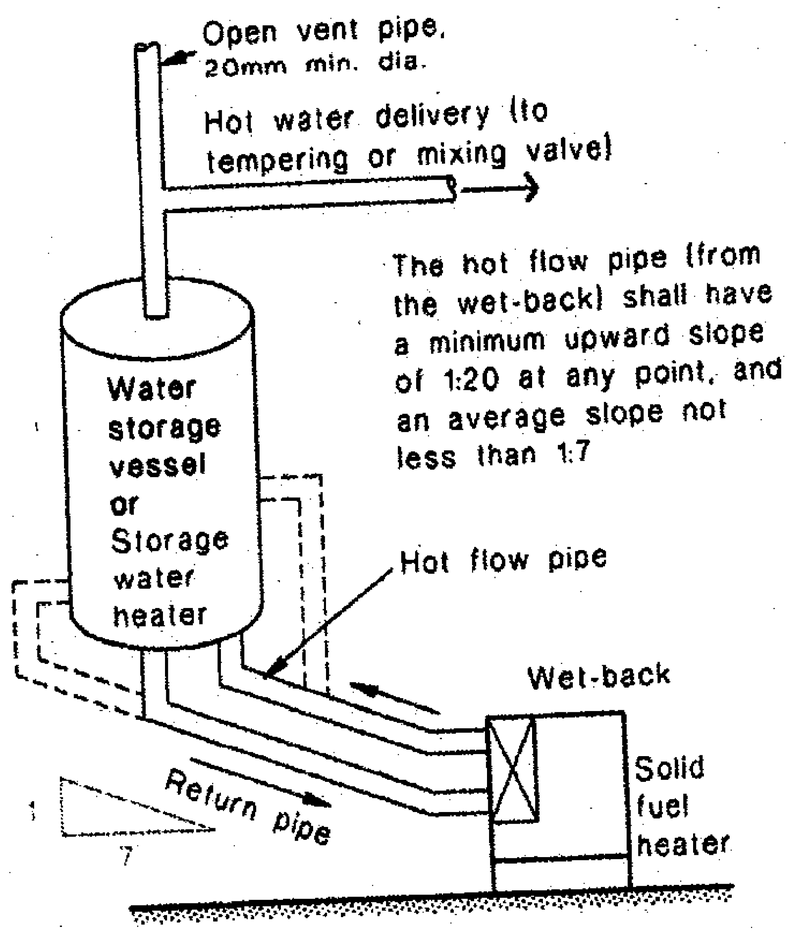

Amend 5 Feb 2004

Figure 16 Tempering Valve Installation
Paragraph 6.14.2 a)

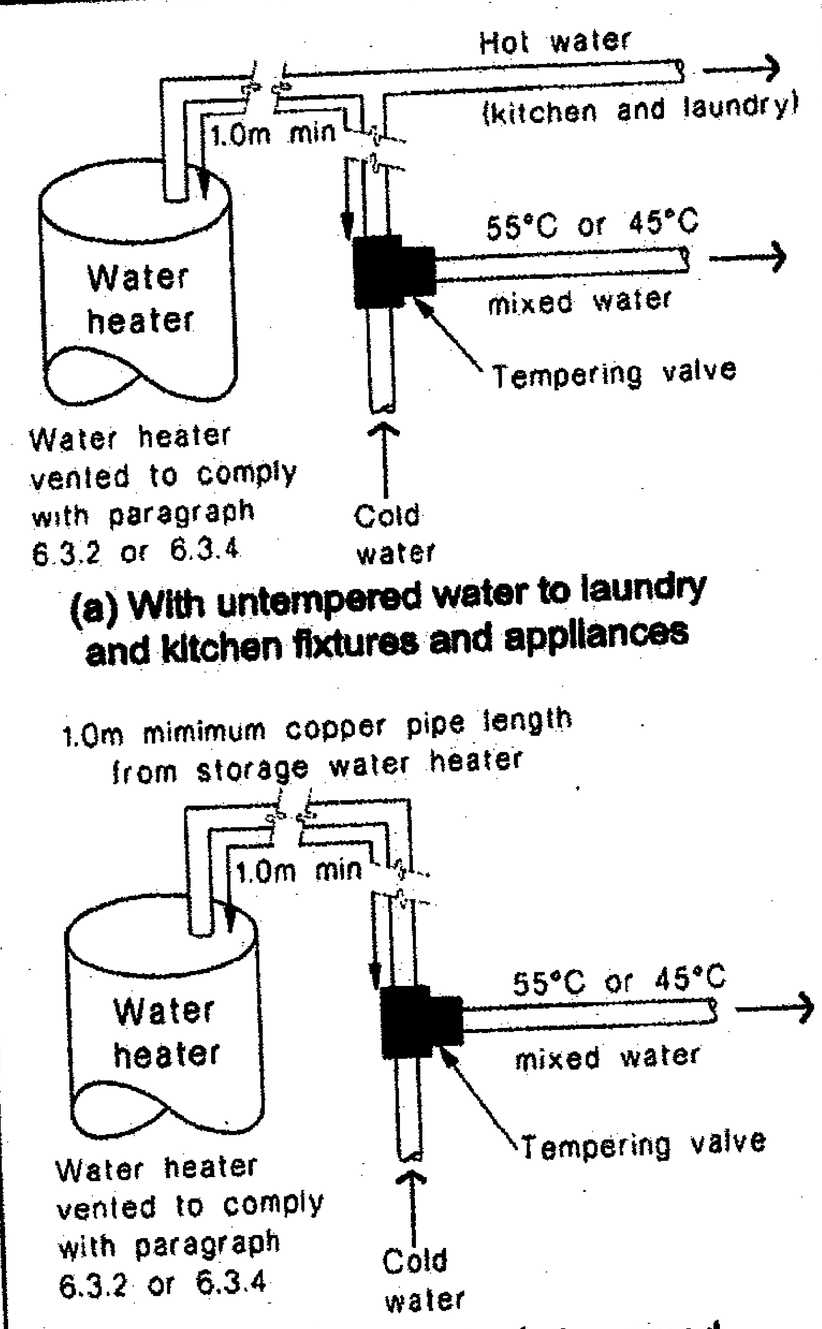

Note:
1. For optimum system efficiency the tempering valve, for other than a mains pressure system, may be located as low as practicable to achieve the manufacturer's recommended head, at the tempering valve.
2. 1.0m minimum copper pipe length from storage water heater.

6.14 Safe water temperatures

APPROVED ABA20250557 Thames-Coromandel District Council

6.14.1 Maximum temperatures

The delivered hot water temperature at any *sanitary fixture* used for personal hygiene shall not exceed:

a) 45°C for early childhood centres, schools, old people's homes, institutions for people with psychiatric or physical disabilities, hospitals, and

b) 55°C for all other *buildings*.

COMMENT:

1. At greatest risk from scalding are children, the elderly, and people with physical or intellectual disabilities, particularly those in institutional care.
2. ***Sanitary fixtures*** used for personal hygiene includes showers, baths, hand basins and bidets.

6.14.2 Hot water delivered from storage water heaters

a) An acceptable method of limiting hot water temperature delivered from *storage water heaters* is to install a mixing device between the outlet of the *water heater* and the *sanitary fixture* (see Figure 16).

Amend 5 Feb 2004

b) Tempering valves shall comply with NZS 4617 or AS 1357.2.

6.14.3 Legionella bacteria

Irrespective of whether a mixing device is installed, the *storage water heater* control thermostat shall be set at a temperature of not less than 60°C to prevent the growth of Legionella bacteria.

Third Edition Dec 2007

Amend 5 Feb 2004