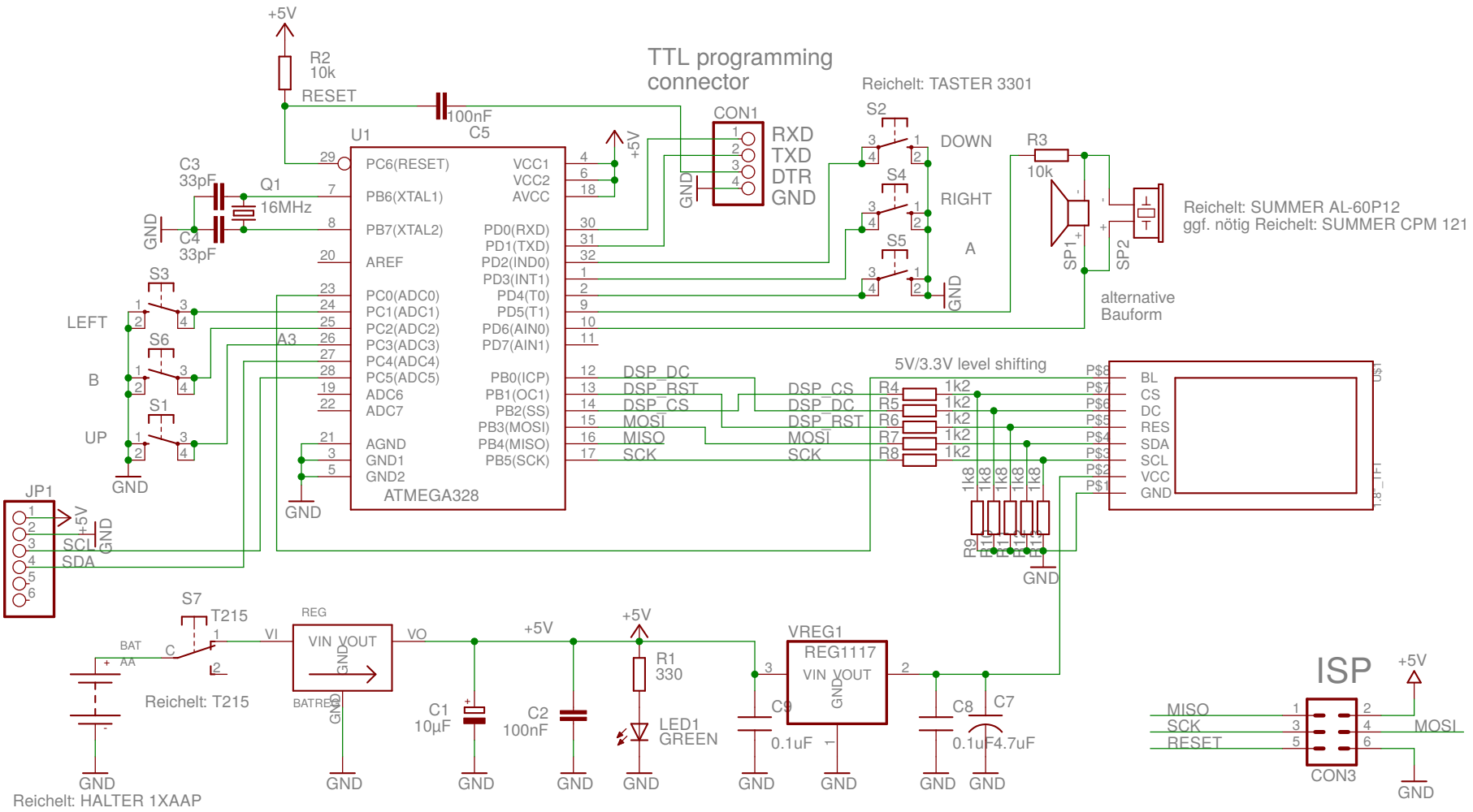

Battery power supply, 1.5V to 5V

BGBoy, cheap Arduboy clone	
TITLE: bgboy_modul	
Document Number: 1.0	REV:
Date: 26.07.19 15:02	Sheet: 1/1