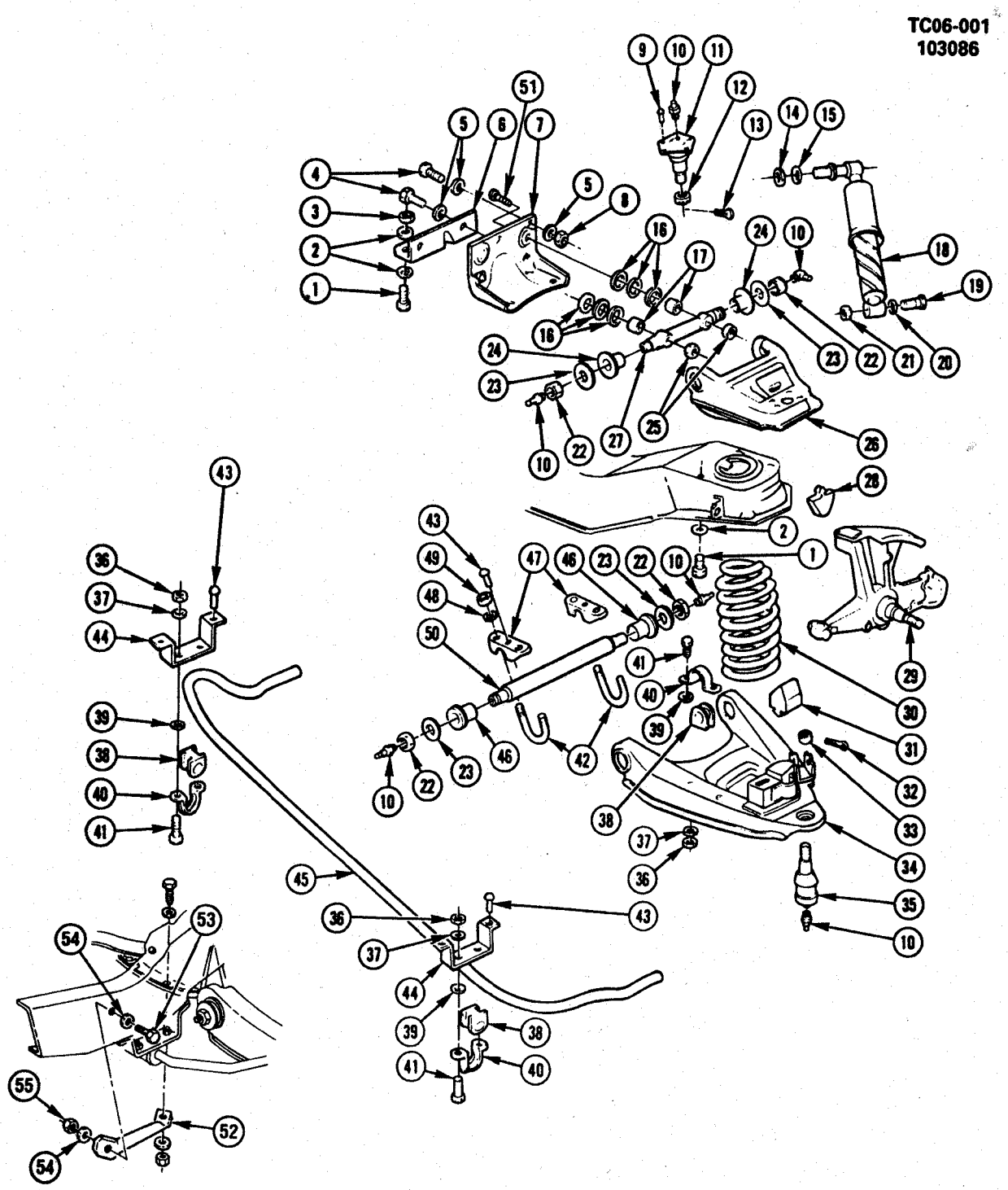

TC06-001

1985-1986 C SUSPENSION/FRONT
1987-1991 R SUSPENSION/FRONT

1.	7.010	**BOLT**, FRAME TO FRONT C/MEMBER UNIT (1/2-13X1 3/4)
2.	8.929	**WASHER**, FL (.531X1.25X.119, STL)
3.	8.915	**NUT**, HEX (1/2-13, CZ)
4.	8.900	**BOLT**, HEX (7/16-14X1.5)
5.	8.929	**WASHER**, SPL FL (.120X.440X.870, PL)
6.	6.177	**REINFORCEMENT**, FRT C/MBR-LH
	6.177	**REINFORCEMENT**, FRT C/MBR-RH
7.	6.177	**BRACKET**, STRG KNU UPR CONT ARM-LH (W/F42)
	6.177	**BRACKET**, STRG KNU UPR CONT ARM-RH (W/F42)
	6.177	**BRACKET**, STRG KNU UPR CONT ARM-LH (EXC F42)
	6.177	**BRACKET**, STRG KNU UPR CONT ARM-RH (EXC F42)
8.	8.915	**NUT**, (7/16-14)
9.	N.S.	**RIVET**, (5/16X7/8)
10.	8.984	**FITTING**,
11.	6.164	**STUD KIT**, STRG KNU UPR CONT ARM
12.	6.164	**NUT**, STRG KNU UPR CONT ARM BALL STUD
13.	8.938	**PIN**, COTTER (1/8X1)
14.	8.915	**NUT**, (5/8-18)
15.	8.931	**WASHER**, (5/8)
16.	6.178	**SHIM**, STRG KNU UPR CONT ARM
17.	6.163	**SPACER**, STRG KNU UPR CONT ARM (1 1/4X1 1/2)
18.	7.345	**ABSORBER ASM**, FRONT SHOCK
19.	8.900	**BOLT**, (1/2-13X2 1/2)
20.	8.931	**WASHER**, (1/2)
21.	8.915	**NUT**, (1/2-13)
22.	8.917	**NUT**, (3/4-16)
23.	6.163	**RETAINER**, STRG KNU UPR CONT ARM BUSHING
24.	6.164	**BUSHING**, STRG KNU UPR CONT ARM
25.	8.917	**NUT**, (1/2-20)
26.	6.168	**ARM**, STRG KNU UPR CONT
27.	6.164	**SHAFT UNIT**, STRG KNU UPR CONT ARM
28.	6.176	**BUMPER**, STRG KNU UPR CONT ARM
29.	6.020	**KNUCKLE ASM**, STRG
30.	7.412	**SPRING ASM**, FRONT (COIL)
31.	6.176	**BUMPER**, STRG KNU LWR CONT ARM
32.	8.938	**PIN**, COTTER (1/8X1 1/2)
33.	6.174	**NUT**, STRG KNU LWR CONT ARM
34.	6.168	**ARM**, STRG KNU LWR CONT
35.	6.174	**STUD ASM**, STRG KNU LWR CONT ARM
36.	8.915	**NUT**, (3/8-16)
37.	N.S.	**WASHER**, (NO LONGER USED)
38.	7.243	**BUSHING**, STABILIZER SHAFT
39.	N.S.	**WASHER**, (NO LONGER USED)
40.	7.242	**BRACKET**, FRONT STABILIZER SHAFT
41.	8.900	**BOLT**, (3/8-16X1 3/8)
42.	6.172	**BOLT**, STRG KNU LWR CONT ARM "U"
43.	N.S.	**RIVET**, (3/8X1)
44.	7.242	**BRACKET**, FRONT STABILIZER SHAFT FRAME
45.	7.241	**SHAFT**, FRONT STABILIZER
46.	6.170	**BUSHING**, STRG KNU LWR CONT ARM SHAFT
47.	6.177	**BRACKET**, STRG KNU LWR CONT ARM (CROSSMEMBER)
48.	8.931	**WASHER**, (9/16)
49.	8.917	**NUT**, (9/16-12)
50.	6.169	**SHAFT UNIT**, STRG KNU LWR CONT ARM
51.	6.178	**BOLT**, STRG KNU UPR CONT ARM BRKT
52.	7.039	**BRACE**, FRT SUSP
53.	8.900	**BOLT**, HEX (1/2-13X1 3/4)
54.	8.929	**WASHER**, (17/32X1 1/16X3/32, PL)
55.	8.917	**NUT**, PREV TORQ HEX LK (1/2-13)

RPO DEFINITIONS
F42 - SUSPENSION SYSTEM, FRT, HD

© 1990 GENERAL MOTORS SERVICE PARTS OPERATIONS—LIGHT TRUCK 52R

29.	6.022	**RING**, BRG ADJ NUT LK (K3/V3)(1985-87)	14038051
30.	6.022	**NUT**, W/PIN, WHL BRG ADJ (K1,2/V1,2)	14034410
	6.022	**NUT**, W/PIN, WHL BRG ADJ (K3)(V3 1987)	15582233
31.	8.934	**RING**, EXT RET TYPE T (1 1/4" DIA SHAFT)(K1,2)	
	6.308	**RING**, DR GEAR RET (K3)	464141

© 1990 GENERAL MOTORS SERVICE PARTS OPERATIONS—LIGHT TRUCK 52R

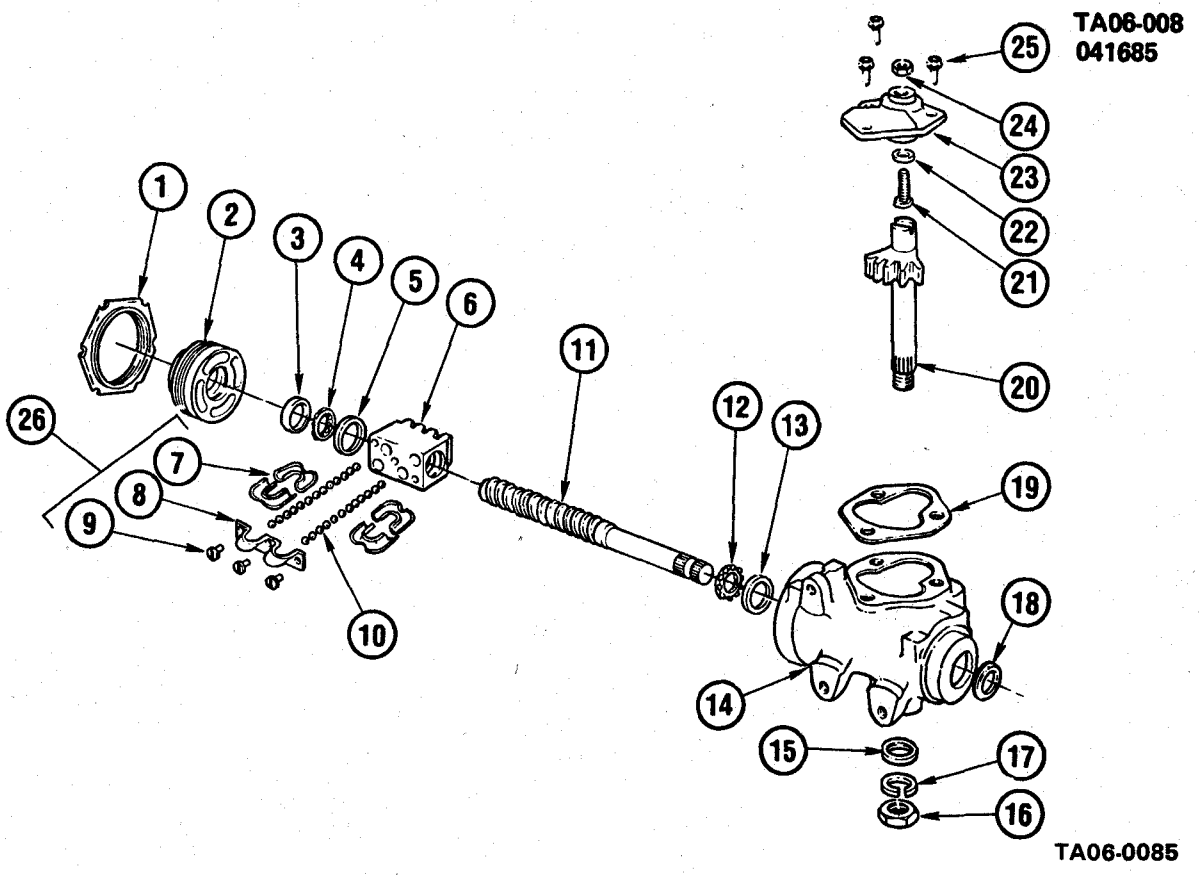

1985-1986 C STEERING GEAR ASM/MANUAL
1987-1988 R STEERING GEAR ASM/MANUAL

1.	6.832	**NUT**, STRG GEAR WORM BRG ADJ LK	5676217
2.	6.830	**ADJUSTER**, STRG GEAR WORM BRG (INCL #3,4,5)	7840888
3.	6.835	**RACE**, STRG GEAR THRUST BRG	5666683
4.	6.835	**BEARING**, STRG GEAR WORM THRUST	5666693
5.	6.835	**RETAINER**, STRG GEAR LWR BRG	5668489
6.	N.S.	**NUT**, BALL (PART OF #11)	
7.	N.S.	**GUIDE**, BALL RETURN (PART OF #11)	
8.	N.S.	**CLAMP**, BALL RETURN GUIDE (PART OF #11,26)	
9.	N.S.	**SCREW**, GUIDE CLAMP (PART OF #11,26)	
10.	6.844	**BALL** (9/32")(50 REQD)	7808541
11.	6.524	**WORM**, STRG GEAR (INCL #6 THRU 10)	7811333
12.	6.835	**BEARING**, STRG GEAR WORM THRUST	5666693
13.	6.835	**RACE**, STRG GEAR THRUST BRG	5666683
14.	6.803	**HOUSING**, STRG (INCL #13)	5698178
15.	6.855	**SEAL**, STRG PITMAN SHAFT GREASE	7801626
16.	6.861	**NUT**, PITMAN ARM (7/8"-14)	5667628
17.	6.861	**WASHER**, PITMAN ARM LOCK	5697702
18.	6.525	**SEAL**, STRG GEAR SHAFT	7802160
19.	6.809	**GASKET**, STRG GEAR HSG SIDE CVR	5666734
20.	6.850	**GEAR**, STRG PITMAN SHAFT	7815992
21.	6.822	**ADJUSTER**, STRG GEAR LASH	7802482
22.	6.828	**SHIM KIT**, STRG GEAR LASH ADJ	605142
23.	6.807	**COVER KIT**, W/BUSHING, HSG SIDE (INCL #19,21,25)	7806748
24.	8.915	**NUT**, HEX (7/16"-20)	
25.	8.900	**BOLT**, HEX FLG HD (3/8"-16 X 3/4")(300M)	
26.	6.842	**GUIDE KIT**, STRG GEAR BALL (INCL #7,8,9)	5676231

© 1990 GENERAL MOTORS SERVICE PARTS OPERATIONS—LIGHT TRUCK 52R

NOTES

BLANK PAGE

TG06-091
080990

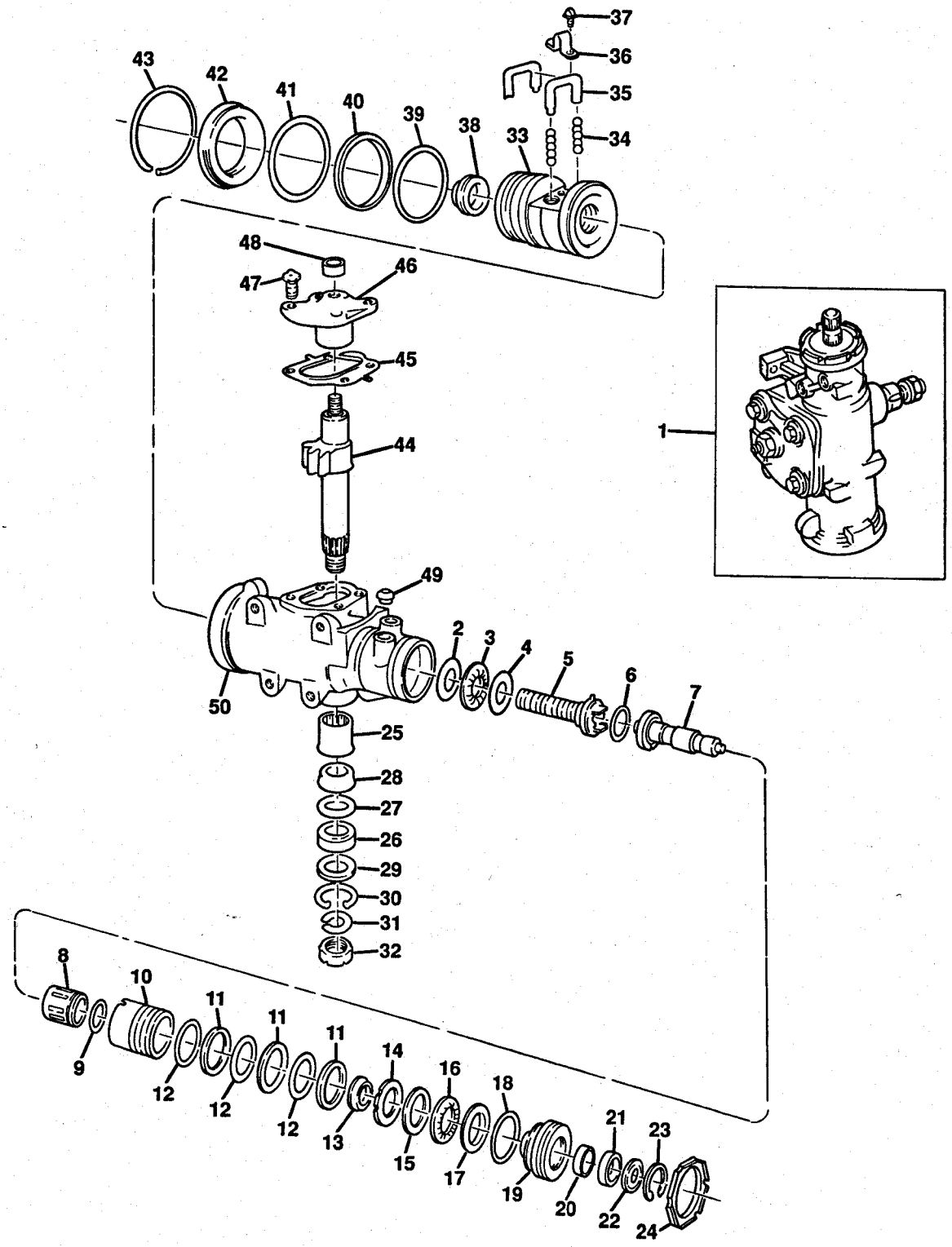

TG06-0911

1985-1986 CK STEERING GEAR ASM (MODEL 800-808)
1987-1991 RV STEERING GEAR ASM (MODEL 800-808)

NOTE: QUANTITY IS ONE PER VEHICLE UNLESS OTHERWISE SPECIFIED.

1.	6.508	**GEAR**, STRG (C/R MODELS)	7846958
	6.508	**GEAR**, STRG (K/V MODELS)	7846959
2.	N.S.	**RACE**, THRUST BRG(KIT 12)	
3.	N.S.	**BEARING**, LWR THRUST(KIT 12)	
4.	N.S.	**RACE**, THRUST BRG(KIT 12)	
5.	N.S.	**WORM**, STRG(KIT 5)	
6.	N.S.	**SEAL**, STUB SHF(KIT 4)	
7.	N.S.	**SHAFT**, STUB(KIT 1)	
8.	N.S.	**SPOOL**, VALVE(KIT 1)	
9.	N.S.	**SEAL**, SPOOL(KIT 1,4)	
10.	N.S.	**BODY**, VLV(KIT 1)	
11.	N.S.	**RING**, VLV BODY(KIT 1,4)	
12.	N.S.	**SEAL**, VLV BODY(KIT 1,4)	
13.	N.S.	**RETAINER**, ADJ BRG(KIT 2,9)	
14.	N.S.	**SPACER**, THRUST BRG(KIT 2,9)	
15.	N.S.	**RACE**, UPR THRUST BRG(KIT 2,9)	
16.	N.S.	**BEARING**, VLV ASM(KIT 2,9)	
17.	N.S.	**RACE**, THRUST BRG(KIT 2,9)	
18.	N.S.	**SEAL**, ADJ PLUG(KIT 2,3)	
19.	N.S.	**PLUG**, ADJ(KIT 2)	
20.	6.826	**BEARING**, ADJUSTER PLUG(KIT 2)	7828012
21.	N.S.	**SEAL**, END PLUG STUB SHF OIL(KIT 2,3)	
22.	N.S.	**SEAL**, STUB SHF(KIT 2,3)	
23.	N.S.	**RING**, RET(KIT 2,3)	
24.	6.832	**NUT**, ADJUSTING PLUG (2 1/4X20)	7826012
25.	6.786	**BEARING**, PITMAN SHAFT GEAR(KIT 6)	5697804
26.	N.S.	**SEAL**, PITMAN SHF OIL, DOUBLE LIP(KIT 6,15)	
27.	N.S.	**WASHER**, PITMAN SHF SEAL B/U(KIT 6,15)	
28.	N.S.	**SEAL**, PITMAN SHF OIL(KIT 6,15)	
29.	N.S.	**WASHER**, PITMAN SHF SEAL B/U(KIT 6,15)	
30.	N.S.	**RING**, RET(KIT 6,15)	
31.	6.861	**WASHER**, PITMAN ARM LOCK (7/8)	5697702
32.	6.861	**NUT**, PITMAN ARM (7/8X14)	5667628
33.	N.S.	**RACK**, W/PISTON STRG GEAR(KIT 5)	
34.	N.S.	**BALL KIT**, GEAR WORM(KIT 5,16)	
35.	6.842	**GUIDE**, BALL RTN(KIT 5)	5695774
36.	6.843	**CLAMP**, BALL RTN GUIDE(KIT 5)	5686539
37.	6.586	**SCREW**, (W/LOCKWASHER) BRG(KIT 5)	5696151
38.	6.586	**PLUG**, PISTON END(KIT 5)	7817355
39.	N.S.	**SEAL**, PISTON RING B/U (2 7/16 ID)(KIT 5,13)	
40.	N.S.	**RING**, PWR CYL PISTON(KIT 5,13)	
41.	N.S.	**SEAL**, HSG END CVR O-RING(KIT 7,8)	
42.	6.824	**PLUG**, HSG END	5686815
43.	N.S.	**RING**, HSG END(KIT 10)	
44.	N.S.	**GEAR**, PITMAN SHF	
45.	N.S.	**SEAL KIT**, HSG SI CVR(KIT 7,8)	
46.	N.S.	**COVER ASM**, HSG GUIDE(KIT 7)	
47.	6.809	**BOLT**, HSG SI CVR(KIT 5,7,8)	7816516
48.	6.822	**NUT**, LASH ADJ(KIT 7)	5687973
49.	N.S.	**VALVE**, HSG(KIT 14)	
50.	N.S.	**HOUSING**, STRG GR	

SERVICE KITS

KIT	1.	6.550	**VALVE ASM**, STEERING GEAR(INCLS. #7-12)	7841529
	2.	6.830	**PLUG**, ADJUSTING(INCLS. #13-23)	7832731
	3.	6.840	**SEAL KIT**, ADJUSTING PLUG(INCLS. #18,21-23)	7832730
	4.	6.552	**SEAL KIT**, VALVE RING(INCLS. #6,9,11,12)	5687182
	5.	6.586	**RACK**, STEERING GEAR W/PISTON & NUT(INCLS. #5,33-40,47)	7817529
	6.	6.803	**HOUSING ASM**, W/RING(INCLS. #25-30)	7834333
	7.	6.807	**COVER ASM**, HOUSING SIDE(INCLS. #45-48)	7817484
	8.	6.850	**GEAR KIT**, PITMAN(INCLS. #45,47)(C/R MODELS)	7813631
		6.850	**GEAR KIT**, PITMAN(INCLS. #45,47)(K/V MODELS)	7818809
	9.	6.835	**BEARING KIT**, UPPER THRUST(INCLS. #13-17)	7832729
	10.	6.825	**SEAL KIT**, END PLUG(INCLS. #41,43)	7817485
	12.	6.835	**BEARING KIT**, LOWER THRUST(INCLS. #2-4)	7826850
	13.	6.579	**SEAL KIT**, W/SEAL & RING(INCLS. #39-41)	7817487
	14.	6.673	**VALVE KIT**, CHECK(INCLS. #49)	7834284
	15.	6.855	**SEAL KIT**, PITMAN SHAFT(INCLS. #26-30)	7826470

© 1990 GENERAL MOTORS SERVICE PARTS OPERATIONS—LIGHT TRUCK 52R

SERVICE KITS

KIT 16. 6.844 BALL KIT, RECIRCULATORY(INCLS. #34) **5695513**

NOTES

BLANK PAGE

TR06-304
051090

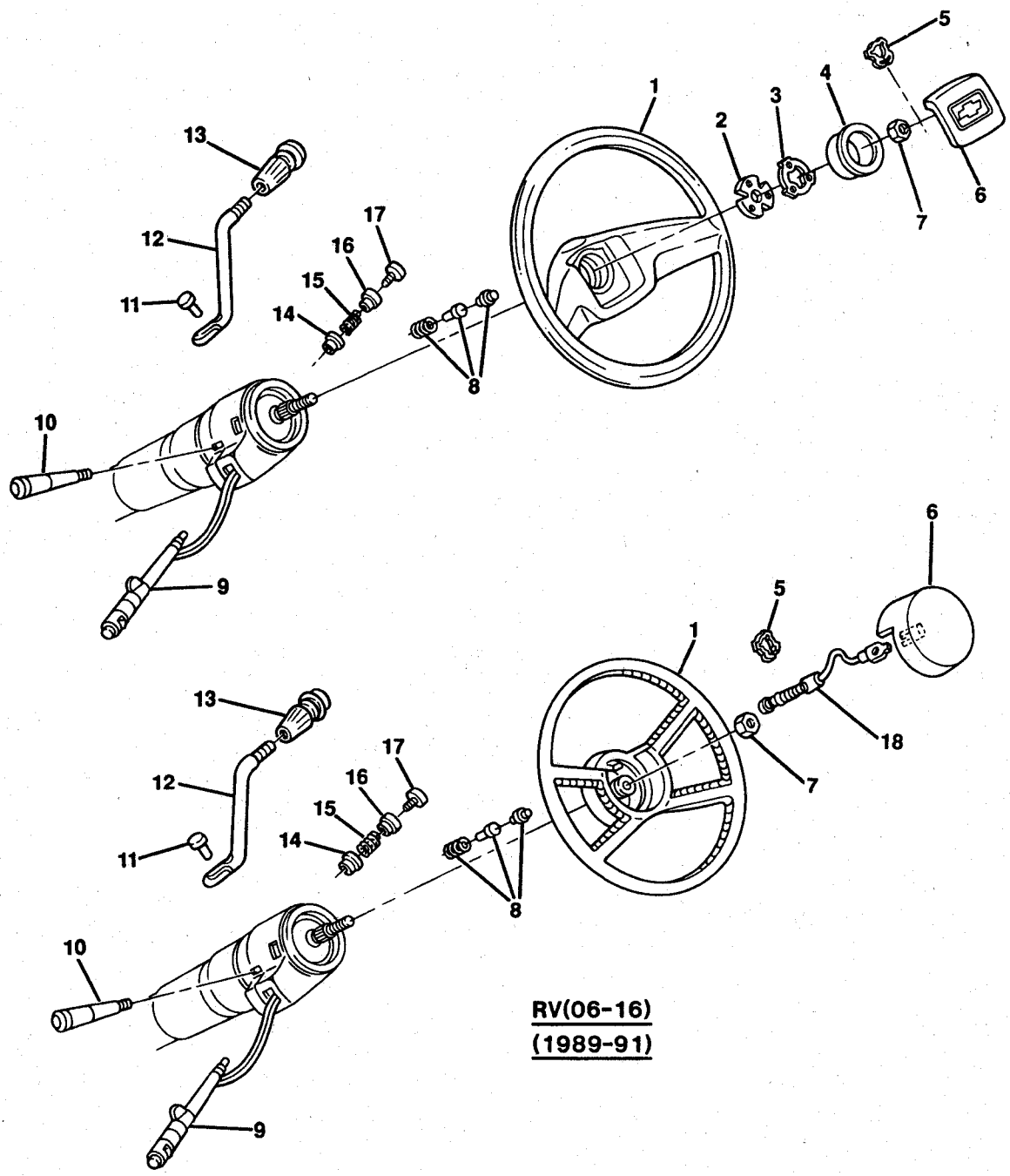

RV(06-16)
(1989-91)

TR06-304

© 1990 GENERAL MOTORS SERVICE PARTS OPERATIONS—LIGHT TRUCK 52R

1985-1986 CK STEERING WHEEL & HORN PARTS
1987-1991 RV STEERING WHEEL & HORN PARTS

1.	6.513	**WHEEL**, STEERING	9762199
	6.513	**WHEEL**, STEERING (4 SPOKE)(06-16)	17984236
2.	2.819	**SPRING**, STEERING WHEEL HORN CONTACT (BELLEVILLE)	17982401
3.	2.819	**BUSHING**, STEERING WHEEL HORN BUTTON CAP ADAPTER	12338143
4.	2.819	**CUP**, STEERING WHEEL HORN BUTTON CAP	17983936
5.	6.515	**RETAINER**, STEERING WHEEL NUT	419454
6.	2.820	**CAP**, STEERING WHEEL HORN (CHEV)(EXC NK3/N31)	17987489
	2.820	**CAP**, STEERING WHEEL HORN (GMC)(EXC NK3/N31)	17987490
	2.820	**CAP**, STEERING WHEEL HORN (CHEV)(W/N31)	17987491
	2.820	**CAP**, STEERING WHEEL HORN (GMC)(W/N31)	17987492
	2.820	**CAP**, STEERING WHL HORN (GMC)(06-16)(W/NK3)(1989-91)	17985469
	2.820	**CAP**, STEERING WHL HORN (CHEV)(06-16)(W/NK3)(1989-91)	17985467
	2.820	**CONTACT**, STEERING WHEEL HORN (W/NK3)(1989-91)	17985460
	2.820	**RING**, HORN CAP TRIM (GMC)(06-16)(W/NK3)(1989-91)	17985205
7.	8.915	**NUT**, HEX PLAIN (M14X1.5)	7846970
8.	2.819	**CONTACT**, HORN BLOW (INCL EYELET & SPRING)	15576411
9.	2.897	**LEVER**, T/SIG & HDLP D/SW & WSW & WSWA (BRI)(EXC K34)	22510144
	2.897	**LEVER**, W/ACTR,T/SIG,WSW,WSWA AND D/SW (W/K34)	25111260
10.	6.514	**LEVER**, STEERING COLUMN TILT WHEEL RELEASE (BLACK)	14042496
11.	8.940	**PIN**, SPL SERRATED (15/64-1 1/4 BLK OXIDE)	3793014
12.	4.006	**LEVER**, A/TRNS CONTROL(W/MD8/MT1)(EXC N33)	14081915
	4.006	**LEVER**, A/TRNS CONTROL (W/MD8/MT1/N33)	15629526
13.	4.006	**KNOB**, A/TRNS CONTROL LEVER (BLACK)	14049351
14.	2.575	**KNOB**, HAZARD WARNING SWITCH	12337964
15.	2.575	**SPRING**, HAZARD WARNING SWITCH KNOB	556743
16.	2.575	**BUTTON**, HAZARD WARNING SWITCH	556742
17.	8.977	**SCREW**, OV HD C/S C/R TAP (M3.5X1.27X22 PC)	11503505
18.	2.859	**WIRE**, HORN SWITCH	9769448

RPO DEFINITIONS
K34 - CRUISE CONTROL, AUTOMATIC, ELECTRONIC
MD8 - TRANSMISSION, AUTO 4 SPD, THM 700 R4
MT1 - TRANSMISSION, AUTO 4 SPD, THM R2
NK3 - STEERING WHEEL, SPORT, SOFT RIM, SIMULATED LEATHER
N31 - STEERING WHEEL, CUSTOM
N33 - STEERING COLUMN, TILT TYPE

© 1990 GENERAL MOTORS SERVICE PARTS OPERATIONS—LIGHT TRUCK 52R

T6-52

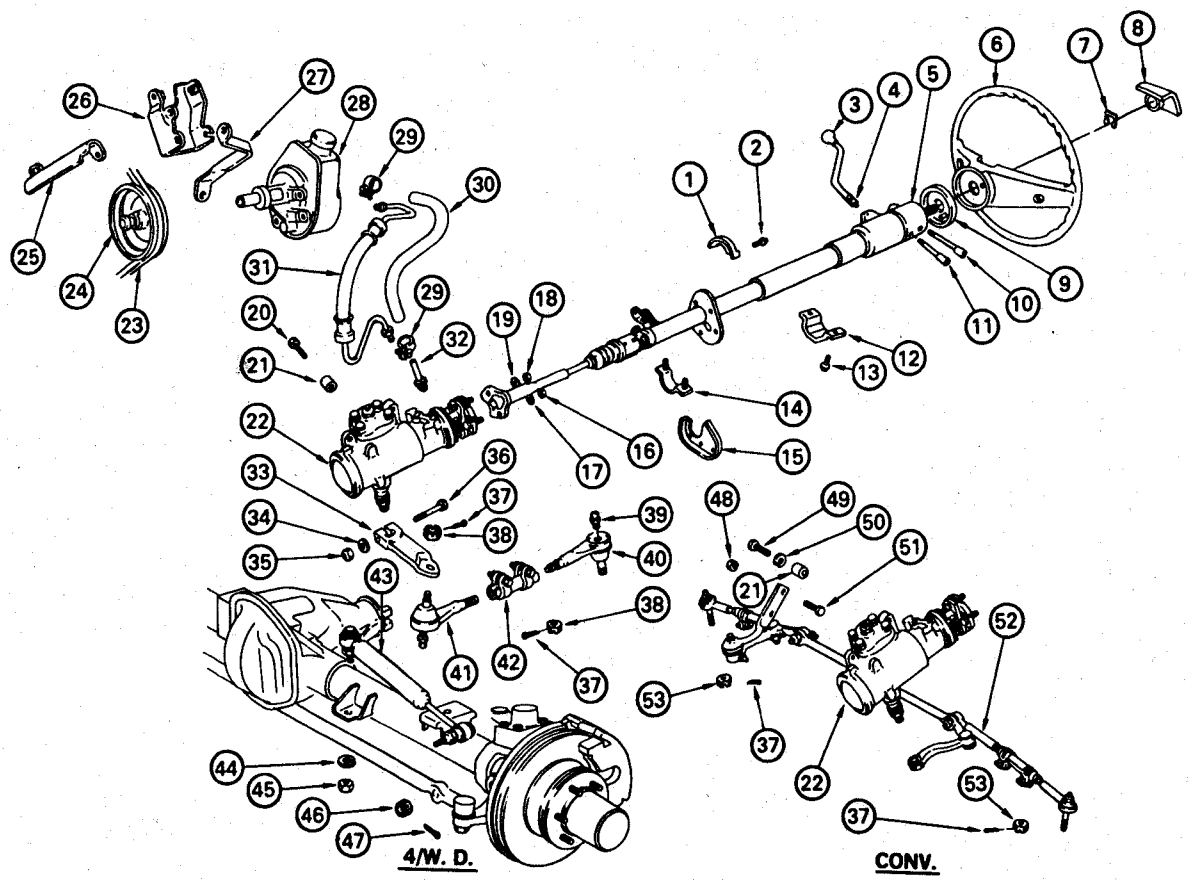

T6-52

1985-1986 CK STEERING SYSTEM & RELATED PARTS

1.	6.758	**COVER**, STRG COL DASH UPR
2.	8.977	**BOLT**, HEX WA HD TAP (M6.3X1.81X20)
3.	4.006	**KNOB**, TRANS CONT LVR
4.	4.006	**LEVER**, TRANS CONT
5.	6.518	**COLUMN**, STRG(*1)
6.	6.513	**WHEEL**, STRG
7.	6.515	**RETAINER**, STRG WHL NUT
8.	2.820	**CAP**, HORN BUTTON
9.	6.500	**COVER**, STRG SHFT LK PLT
10.	2.897	**LEVER**, W/KNOB, T/SIG
	2.897	**LEVER**, W/SWITCH, T/SIG AND CRUISE CONT
11.	6.514	**LEVER**, W/KNOB, STRG WHL REL
12.	6.760	**SUPPORT**, STRG COL UPR
13.	8.900	**BOLT** (M8X1.25X12)
14.	6.760	**CLAMP**, STRG COL DASH
15.	6.758	**COVER**, STRG COL DASH LWR
16.	8.915	**NUT**, HEX (3/8"-24)
17.	8.931	**WASHER**, LK (3/8")
18.	8.915	**NUT**, HEX (5/16"-24)
19.	8.931	**WASHER**, LK (M8)
20.	6.509	**BOLT**, STRG GEAR TO FRAME (7/16"-14X2 1/8")
21.	6.509	**SPACER**, STRG GEAR TO FRAME
22.	6.508	**GEAR**, STRG(*1)
23.	1.066	**BELT**, HYD STRG
24.	6.655	**PULLEY**, HYD STRG PUMP
25.	6.606	**BRACE**, HYD STRG PUMP
26.	6.606	**BRACKET**, HYD STRG PUMP
27.	6.606	**BRACE**, HYD STRG PUMP RR
28.	6.605	**PUMP**, HYD STRG(*1)
29.	8.948	**CLAMP**, HOSE PUMP RTRN (1/2"TO5/8")
30.	8.962	**HOSE**, PUMP RTRN (3/8)(CUT FROM BULK)
31.	6.670	**HOSE ASM**, HYD STRG PUMP OTLT
32.	6.671	**PIPE ASM**, HYD STRG GEAR OTLT
33.	6.859	**ARM**, PITMAN
34.	8.929	**WASHER** (9/16X1 1/8X1/16)
35.	8.916	**NUT** (9/16"-18)
36.	8.900	**BOLT** (5/8"-18X3 1/2")
37.	8.938	**PIN**, COTTER (1/8"X1/2")
38.	8.917	**NUT**, SLOTTED HEX (3/8"-18)
39.	8.984	**FITTING**, LUB (1/4"-28X1/2")
40.	6.874	**SOCKET**, STRG CONN ROD LONG
41.	6.874	**SOCKET**, STRG CONN ROD SHORT
42.	6.870	**SLEEVE**, STRG CONN ROD ADJ
43.	6.865	**ABSORBER**, STRG RELAY AND THE ROD SHK
44.	8.931	**WASHER**, LK (1/2")
45.	8.915	**NUT**, HEX (1/2"-20)
46.	8.917	**NUT**, SLOTTED HEX (1/2"-20)
47.	8.938	**PIN**, COTTER (3/32X1)
48.	8.917	**NUT**, HEX LK (3/8"-16)
49.	8.900	**BOLT**, HEX (7/16"-14X1 1/4")
50.	8.931	**WASHER**, LK (7/16")
51.	8.900	**BOLT**, HEX (3/8"-16X1 1/4")
52.	N.S.	**ROD ASM**, RELAY AND TIE(*1)
53.	6.164	**NUT**, STRG LINK

NOTE 1: FOR INFORMATION ON SERVICEABLE COMPONENTS, SEE APPLICABLE ASSEMBLY ILLUSTRATION.

© 1990 GENERAL MOTORS SERVICE PARTS OPERATIONS—LIGHT TRUCK 52R

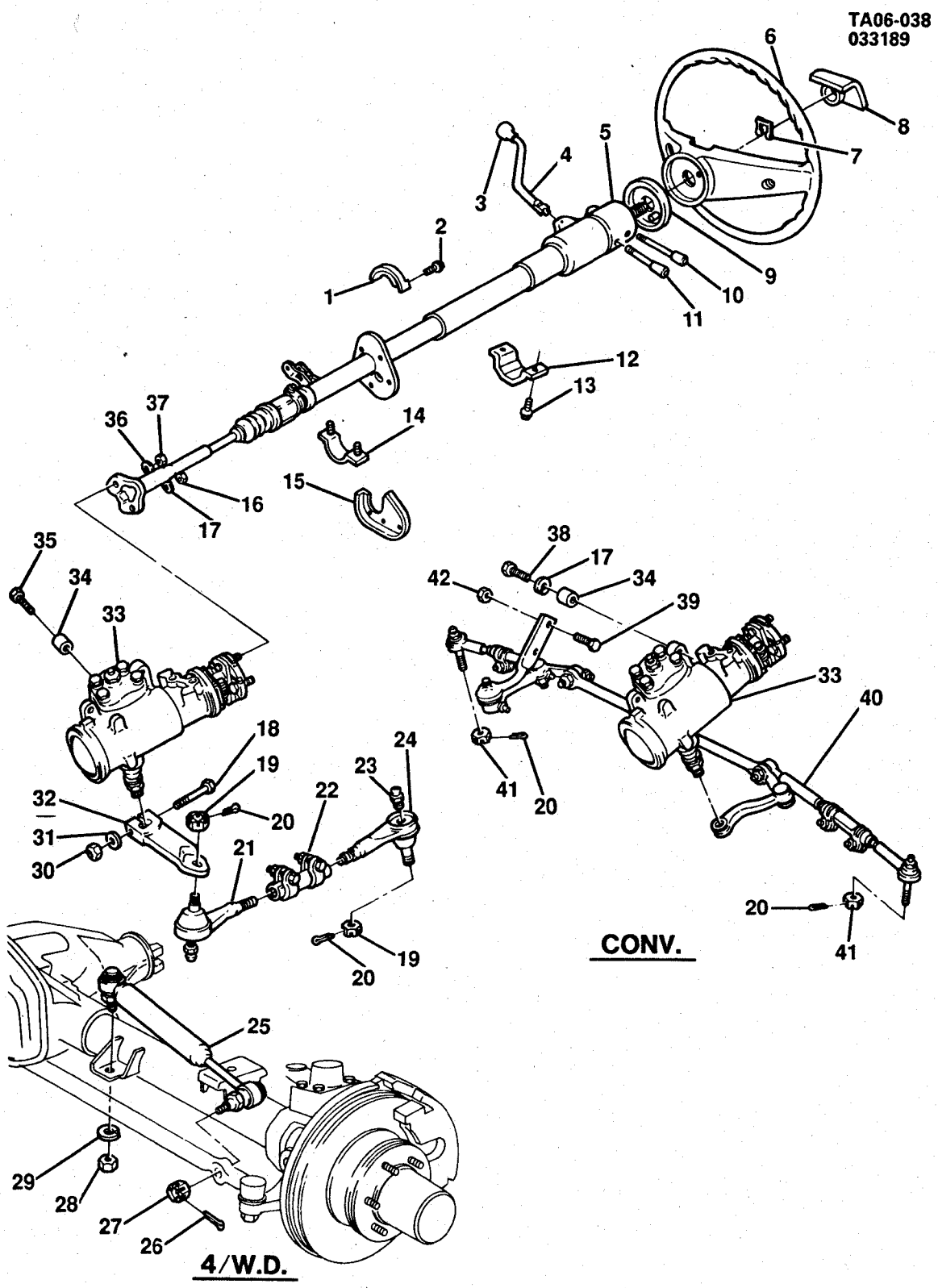
TA06-038
033189
CONV.
4/W.D.
TA06-038

1987-1991 RV STEERING SYSTEM & RELATED PARTS

1.	6.758	**COVER**, STRG COL DASH UPR	14027746
2.	8.977	**BOLT**, HEX W/FL WA (M6.3X1.81X20, PZOR)	22527475
3.	4.006	**KNOB**, TRANS CONT LVR	14049351
4.	4.006	**LEVER**, A/TRNS CONT (EXC N33)	14081915
	4.008	**INSULATOR**, A/TRNS CONT LVR PIV PIN (EXC N33)	
	4.006	**LEVER**, TRANS CONT (W/N33)(1987-88)	14029232
	4.006	**LEVER**, A/TRNS CONT (W/N33)(1989-91)	15629526
5.	6.518	**COLUMN**, STRG(*1)	7842668
6.	6.513	**WHEEL**, STRG (SEE CATALOG)	
7.	6.515	**RETAINER**, STRG WHL NUT	419454
8.	2.820	**CAP**, HORN BUTTON (SEE CATALOG)	
9.	6.500	**COVER**, STRG SHFT LK PLT	7819738
10.	2.897	**LEVER**, T/SIG (SEE CATALOG)	
11.	6.514	**LEVER**, W/KNOB, STRG WHL REL	14042496
12.	6.760	**SUPPORT**, STRG COL UPR	7809925
13.	8.900	**BOLT**, (M8X1.25X12, 10.9)	11500914
14.	6.760	**CLAMP**, STRG COL DASH	467283
15.	6.758	**COVER**, STRG COL DASH LWR	14027745
16.	6.525	**NUT**, STRG GR CPLG (HEX 3/8-24)(0.626)	3866766
17.	8.931	**WASHER**, SPR LK (7/16X25/32X7/64, ZOR)	9439513
18.	8.900	**BOLT**, HEX (9/16-18X3.5, 300M)	9425344
19.	8.917	**NUT**, HEX SLOTTED (5/8-18, 286M PL)	14054921
20.	8.938	**PIN**, COTTER (1/8-2X1/2, PL)	103391
21.	6.874	**SOCKET**, STRG CONN ROD SHORT	362297
22.	6.870	**SLEEVE**, STRG CONN ROD ADJ (1987-88)	14007644
	6.870	**SLEEVE**, STRG CONN ROD (1989-91)	15617288
23.	8.984	**FITTING**, LUB (.250-28, CZ)	9417901
24.	6.874	**SOCKET**, STRG CONN ROD LONG	362298
25.	6.865	**ABSORBER**, STRG RELAY AND THE ROD SHK	4993563
26.	8.938	**PIN**, COTTER (3/32X1 1/2, PL)	103376
27.	8.917	**NUT**, SLOTTED HEX (1/2-20, 301M)	9431840
28.	8.915	**NUT**, HEX (1/2-20, 301M ZC)	9417614
29.	8.931	**WASHER**, SPR LK (.50X.87, ZOR)	9439514
30.	8.917	**NUT**, PREV TORQ HEX (9/16-18, 301M ZN)	9422304
31.	8.929	**WASHER**, FL (9/16X1 1/8X1/16, ZP)	2441143
32.	6.859	**ARM**, PITMAN	14064660
33.	6.508	**GEAR**, STRG(*1)	7846959
34.	6.509	**SPACER**, STRG GEAR TO FRAME	343179
35.	6.509	**BOLT**, STRG GEAR TO FRAME (7/16-14X2 1/8)	343178
36.	8.931	**WASHER**, SPR LK (5/16, PL)	9439511
37.	8.915	**NUT**, HEX (5/16-24, 286M ZN)	451399
38.	8.900	**BOLT**, HEX (7/16-14X1 1/4)	9424069
39.	8.900	**BOLT**, HEX (3/8-16X1.25, 300M PS)	9440954
40.	N.S.	**ROD ASM**, RELAY AND TIE(*1)	
41.	6.164	**NUT**, STRG LINK	3983037
42.	8.917	**NUT**, HEX LK (3/8-16, 301M CAD)	9422297

NOTE 1: FOR INFORMATION ON SERVICEABLE COMPONENTS, SEE APPLICABLE ASSEMBLY ILLUSTRATION.

RPO DEFINITIONS
N33 - STEERING COLUMN, TILT TYPE

© 1990 GENERAL MOTORS SERVICE PARTS OPERATIONS—LIGHT TRUCK 52R

GM6-45

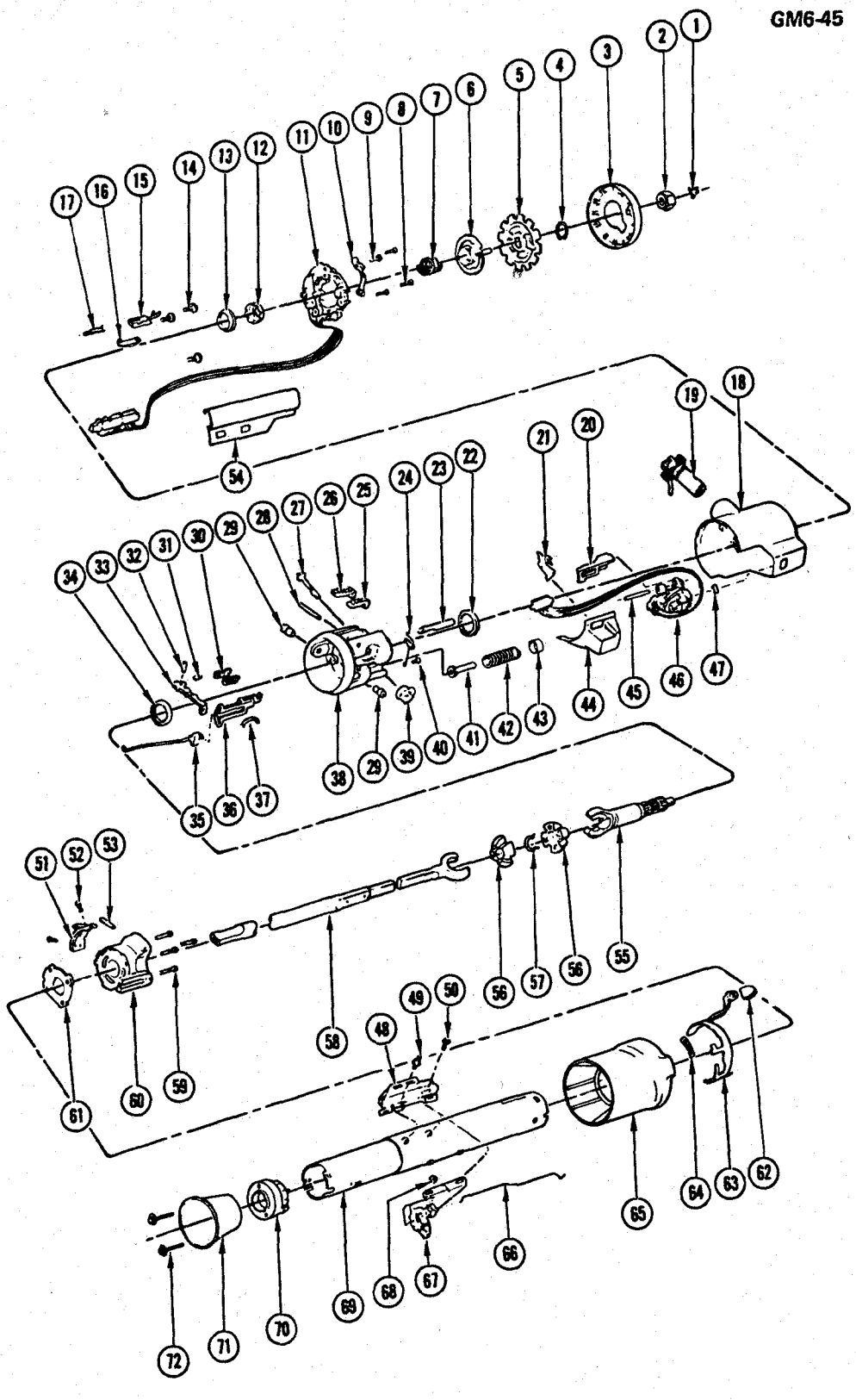

GM6-45 5

© 1990 GENERAL MOTORS SERVICE PARTS OPERATIONS—LIGHT TRUCK 52R

1985-1986 CK STEERING COLUMN/KEY RELEASE TILT WHEEL-M.T. FLR SHFT
1987-1990 RV STEERING COLUMN/KEY RELEASE TILT WHEEL-M.T. FLR SHFT

1.	6.515	**RETAINER**
2.	8.915	**NUT**, HEX (M14 X 1.5)
3.	6.500	**COVER**, SHF LK
4.	6.515	**RING**, RET
5.	6.500	**LOCK**, SHF
6.	2.896	**CAM**, TURN SIG
7.	6.521	**SPRING**, UPR BRG
8.	2.895	**SCREW**, SIG SW MTG
9.	N.S.	**SCREW**, RD WASHER HD
10.	2.895	**ARM**, SIG SW
11.	2.895	**SWITCH**, DIR SIG
	2.897	**LEVER**, DIR SIG
12.	N.S.	**SEAT**, UPR BRG INR RACE(*1)
13.	N.S.	**RACE**, UPR SHF UPR BRG(*1)
14.	2.895	**SCREW**, (1/4"-20 X 3/4")
15.	2.195	**SWITCH**, KEY BUZZER
16.	2.195	**CLIP**, BUZZER SW RET
17.	2.195	**SCREW**, LK RET
18.	6.518	**COVER**, LK HSG
19.	2.188	**LOCK**, STRG COL
20.	2.459	**ACTUATOR**, DIMR SW ROD
21.	6.514	**SHIELD**, TILT LVR OPG
22.	6.521	**BEARING**, UPR STRG SHF LWR
23.	6.500	**BOLT**, STRG SHF LK
24.	6.500	**SPRING**, LK BOLT
25.	6.514	**SHOE**, LK 3/POSN
26.	6.514	**SHOE**, LK 4/POSN
27.	2.195	**SHAFT**, SW SEL
28.	6.514	**PIN**, TILT LK SHOE RET
	6.514	**LEVER**, TILT WHL RELEASE
29.	N.S.	**PIN**, PIVOT(*1)
30.	6.514	**SPRING**, LK SHOE RET
31.	6.514	**SPRING**, SHOE REL
32.	6.514	**PIN**, SHOE REL LVR
33.	6.514	**LEVER**, SHOE REL
34.	6.521	**BEARING**, UPR SHF LWR
35.	2.195	**ACTUATOR**, IGN SW
36.	2.195	**RACK**, SW ACTR
37.	2.195	**SPRING**, RACK PRELOAD
38.	6.514	**HOUSING**, COL
39.	2.195	**SECTOR**, SW ACTR
40.	6.500	**SCREW**, SHF LK BOLT SPR
41.	N.S.	**GUIDE**, SPR(*1)
42.	N.S.	**SPRING**, COL(*1)
43.	N.S.	**RETAINER**, SPR(*1)
44.	6.518	**CAP**, DIMR SW HSG CVR END
45.	2.459	**PIN**, DIMR SW ACTR PIVOT
46.	2.459	**SWITCH**, W/S WIPER DIMR SW
47.	2.459	**SPRING**, PIN PRELOAD DIMR SW
48.	2.188	**SWITCH ASM**, IGN
49.	2.188	**STUD**, DIMR & IGN SW MTG
50.	2.188	**SCREW**, IGN SW
51.	6.518	**PLATE**, SHROUD RET
52.	4.012	**SCREW**, SHFT DETENT PLATE
53.	6.514	**PIN**, COL
54.	2.906	**PROTECTOR**, WIRING
55.	6.524	**SHAFT**, STRG UPR
56.	6.514	**SPHERE**, SHF CTR
57.	6.514	**SPRING**, CTR SPHERE
58.	6.524	**SHAFT**, STRG LWR
59.	6.514	**SCREW**, HSG SUPT
60.	6.518	**SUPPORT**, HSG
61.	6.514	**PLATE**, SUPT LK
62.	6.500	**PAD**, REL LVR FINGER
63.	6.500	**LEVER**, KEY REL
64.	6.514	**SPRING**, KEY REL
65.	6.518	**SHROUD**, HSG
66.	2.459	**ROD**, DIMR SW
67.	2.459	**SWITCH**, DIMR
68.	8.915	**NUT**, (#10-24)
69.	6.518	**JACKET**, COL
70.	6.521	**BEARING**, W/ADAP LWR BRG

© 1990 GENERAL MOTORS SERVICE PARTS OPERATIONS—LIGHT TRUCK 52R

71. **6.521** **RETAINER**, BRG ADAP .....
72. **8.977** **SCREW**, HEX .....

NOTE 1: PART OF SPRING KIT, TILT UPR, GROUP 6.521

© 1990 GENERAL MOTORS SERVICE PARTS OPERATIONS—LIGHT TRUCK 52R

NOTES

BLANK PAGE

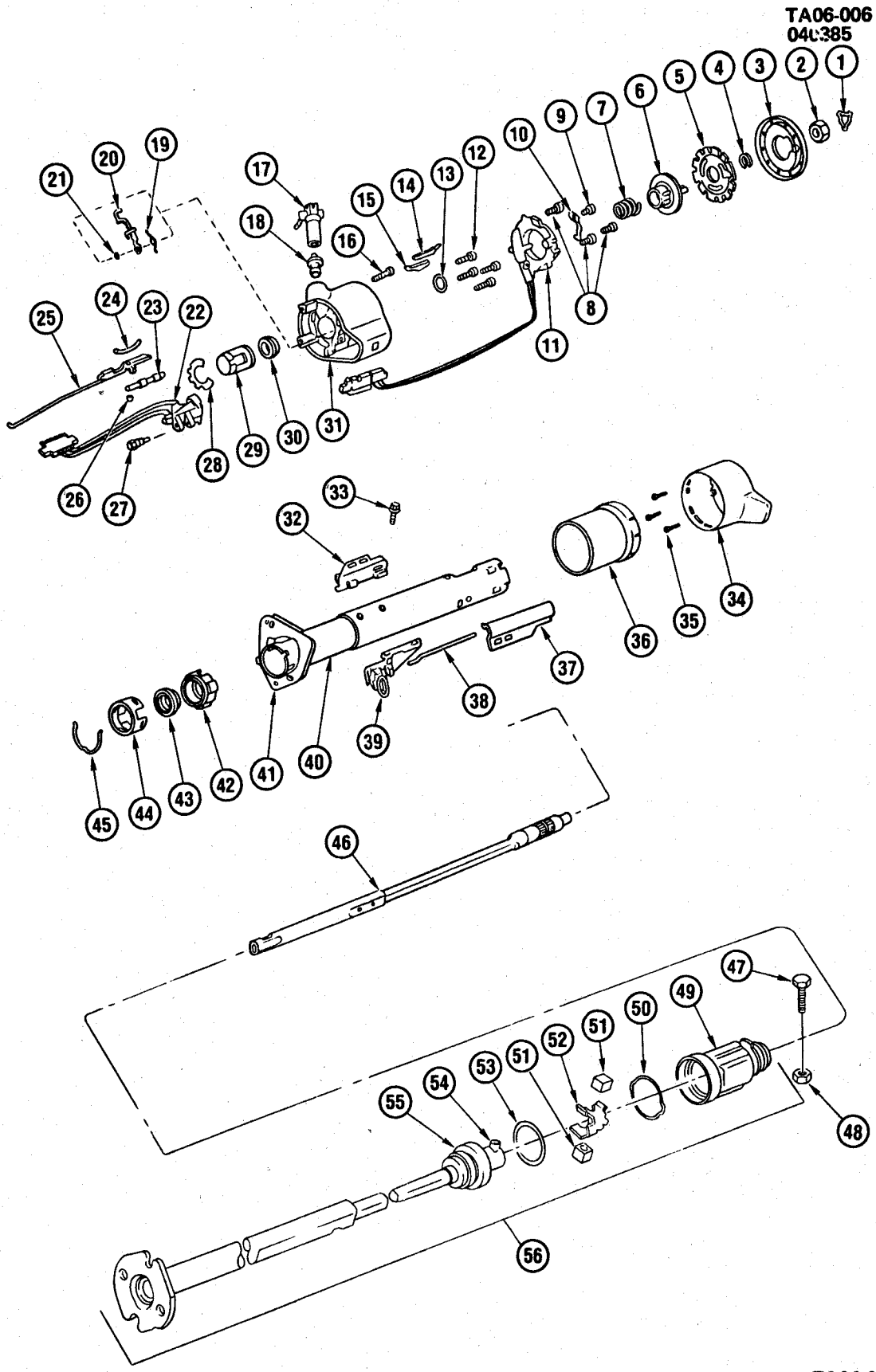

© 1990 GENERAL MOTORS SERVICE PARTS OPERATIONS—LIGHT TRUCK 52R

1985-1986 CK STEERING COLUMN/NON-TILT FLOOR SHIFT
1987-1991 RV STEERING COLUMN/NON-TILT FLOOR SHIFT

1.	6.515	**RETAINER**, STRG WHL NUT	419454
2.	8.915	**NUT**, HEX (M14X1.5)(PLAIN)(GRD 9)	
3.	6.500	**COVER**, STRG SHF LK PLT	7819738
4.	6.521	**RETAINER**, STRG UPR SHF	5694191
5.	6.500	**LOCK**, STRG COL SHF	7837185
6.	2.896	**CAM**, T/SIG CANC	7812136
7.	6.521	**SPRING**, STRG COL SHF UPR BRG	7819898
8.	2.895	**SCREW**, STRG COL SIG SW MTG	7809128
9.	8.977	**SCREW**, LG RD HD TORX TAP (M4.2X1.41X20)	
10.	2.895	**ARM**, STRG COL T/SIG SW ACTR	7843400
11.	2.895	**SWITCH**, STRG COL T/SIG	1997983
12.	2.906	**SCREW**, T/SIG SW HSG	7806867
13.	6.521	**WASHER**, STRG SHF UPR RET RING THRUST	7800580
14.	2.195	**SWITCH**, IGN KEY WARNING ALARM	7804414
15.	2.195	**CLIP**, ALARM SWITCH RET	7830375
16.	2.195	**SCREW**, CYL LK RET	7830377
17.	2.188	**LOCK**, IGN (CODED W/KEY,B&S 607872)	7830380
18.	2.195	**SECTOR**, IGN SW ACTR	7812526
19.	6.514	**SPRING**, IGN KEY REL	7810516
20.	6.500	**LEVER**, IGN KEY REL	7819515
21.	2.195	**WASHER**, KEY RELEASE, WAVE	7811188
22.	2.459	**SWITCH**, DIMMER PIVOT & WIPER (PULSE)	7844704
	2.459	**SWITCH**, DIMMER PIVOT & WIPER (2 SPD)	7840274
23.	6.500	**BOLT**, W/SPRING, STRG COL SHF LK	7806185
24.	2.195	**SPRING**, STRG COL IGN SW RACK PRELOAD	7804410
25.	2.195	**ROD**, STRG COL IGN SW ACTR	7842682
	2.195	**RACK**, IGN SW ACTR	7810020
26.	6.500	**WASHER**, STRG COL LK BOLT SPRING THRUST	7805950
27.	2.459	**PIN**, DIMR SW ACTR PIVOT	7830384
28.	6.521	**RETAINER**, STRG COL UPR BRG	7832311
29.	6.521	**BUSHING**, STRG COL BRG RET	7829069
30.	6.521	**BEARING**, STRG COL HSG	7819517
31.	6.518	**HOUSING KIT**, STRG COL (INCL #18,28,29,30)	7837035
32.	2.188	**SWITCH**, STRG COL IGN	1990115
33.	2.188	**SCREW**, STRG COL IGN SW	7806433
	2.195	**STUD**, STRG COL DIMMER & IGN SW MT	7846418
34.	6.518	**BOWL**, STRG COL FLR SHIFT	7830208
35.	2.895	**SCREW**, STRG COL SIG SW MT	7809128
36.	4.010	**SHROUD**, STRG COL G/S BOWL	7833436
37.	6.522	**PROTECTOR**, STRG COL WIRING (157MM LG)	7830335
38.	2.459	**ROD**, STRG COL DIMMER SW ACTR	26002904
39.	2.459	**SWITCH**, STRG COL DIMMER	26019661
40.	6.518	**JACKET**, STRG COL	7842685
41.	6.758	**SEAL**, STRG COL DASH	7814387
42.	6.521	**ADAPTER**, STRG SHF LWR BRG	7805822
43.	6.521	**BEARING**, STRG COL LWR SHIFT TUBE	7805700
44.	6.521	**REINFORCEMENT**, STRG COL LWR BRG ADAPTER	7804440
45.	6.521	**CLIP**, STRG COL LWR BRG ADAPTER	7804439
46.	6.524	**SHAFT**, STRG (COMPLETE)	7831538
47.	6.525	**BOLT**, INTER STRG SHAFT	7832907
48.	8.917	**NUT**, HEX FLG (M10X1.5, 9 PZOR)	
49.	6.525	**COUPLING**, W/PLUG, INTER STRG SHF	7831571
50.	6.525	**RETAINER**, INTER STRG SHAFT CPLG SEAL	7809408
51.	6.525	**BEARING**, STRG SHF UJT CPLG	5671921
52.	6.525	**SPRING**, STRG SHAFT CPLG	7809409
53.	6.525	**WASHER**, CPLG & CLAMP INTER SHAFT	7817454
54.	N.S.	**PIN**, STRG SHF (PART OF #56)	
55.	N.S.	**SEAL**, SHF CPLG (PART OF #56)	
56.	6.526	**SHAFT**, W/CPLG, STRG INTER	7831570

© 1990 GENERAL MOTORS SERVICE PARTS OPERATIONS—LIGHT TRUCK 52R

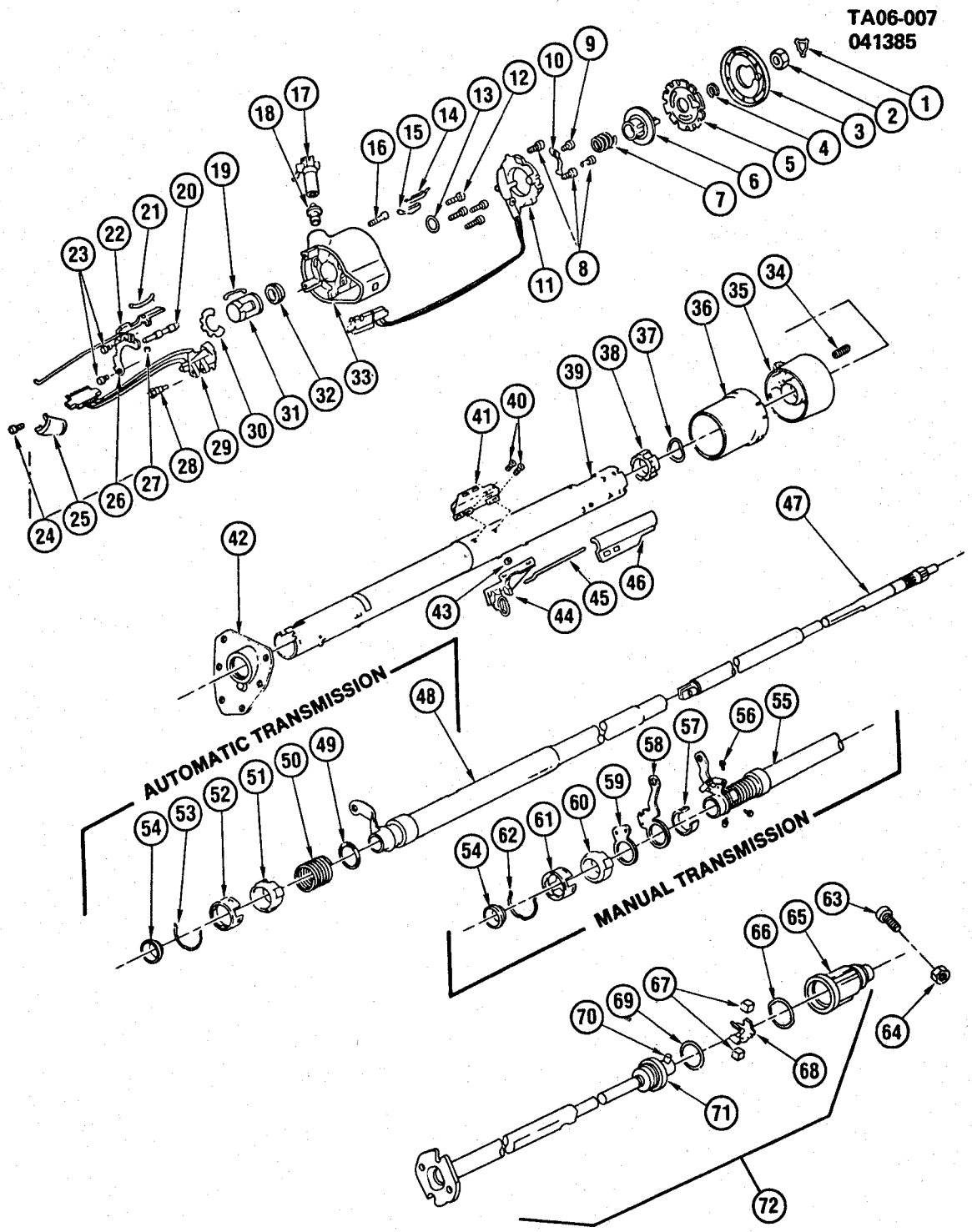

© 1990 GENERAL MOTORS SERVICE PARTS OPERATIONS—LIGHT TRUCK 52R

1985-1986 CK STEERING COLUMN/NON-TILT COLUMN SHIFT
1987-1990 RV STEERING COLUMN/NON-TILT COLUMN SHIFT

1.	6.515	**RETAINER**, STRG WHL NUT	419454
2.	8.915	**NUT**, HEX (M14X1.5)(PLAIN)(GRD 9)	
3.	6.500	**COVER**, STRG SHF LK PLT	7819738
4.	6.521	**RETAINER**, STRG UPR SHF	5694191
5.	6.500	**LOCK**, STRG COL SHF	7837185
6.	2.896	**CAM**, T/SIG CANC	7812136
7.	6.521	**SPRING**, UPR BRG (W/M.T.)	7804771
	6.521	**SPRING**, UPR BRG (W/A.T.)	7819898
8.	2.895	**SCREW**, SIG SW MTG	7809128
9.	8.977	**SCREW**, LG RD HD TORX TAP (M4.2X1.41X20)	
10.	2.895	**ARM**, T/SIG SW ACTR	7843400
11.	2.895	**SWITCH**, T/SIG	1997983
12.	2.906	**SCREW**, T/SIG SW HSG	7806867
13.	6.521	**WASHER**, STRG SHF UPR RET RING THRUST	7800580
14.	2.195	**SWITCH**, IGN KEY WARNING ALARM	7804414
15.	2.195	**CLIP**, ALARM SWITCH RET	7830375
16.	2.195	**SCREW**, CYL LK RET	7830377
17.	2.188	**LOCK**, IGN (CODED W/KEY)	7830380
18.	2.195	**SECTOR**, IGN SW ACTR	7812520
19.	2.819	**CONTACT**, HORN CIRC	7832984
20.	6.500	**BOLT**, W/SPRING, SHF LK	7806185
21.	2.195	**SPRING**, IGN SW RACK PRELOAD	7804410
22.	2.195	**RACK**, W/ROD, IGN SW ACTR (W/A.T.)	7843368
	2.195	**RACK**, W/ROD, IGN SW ACTR (W/M.T.)	7843510
23.	4.027	**SCREW**, SHIFT LVR RET	7830314
24.	2.895	**SCREW**, HSG COVER	7809128
25.	6.518	**COVER**, HSG	7830209
26.	4.027	**GATE**, SHIFT LVR (W/M.T.)	7804761
	4.027	**GATE**, SHIFT LVR (W/A.T.)	7845130
27.	6.500	**WASHER**, LK BOLT SPR THR	7805950
28.	2.459	**PIN**, DIMR SW ACTR PIVOT	7830384
29.	2.459	**SWITCH**, DIMMER PIVOT & WPR (2 SPD)	7840274
	2.459	**SWITCH**, DIMMER PIVOT & WPR (PULSE)	7844704
30.	6.521	**RETAINER**, UPR BRG	7832311
31.	6.521	**BUSHING**, BRG RET	7832808
32.	6.521	**BEARING**, STRG COL HSG	7819517
33.	6.518	**HOUSING KIT**, STRG COL (W/M.T.)(INCL #18,19,30,31,32)	7838497
	6.518	**HOUSING KIT**, STRG COL (W/A.T.)(INCL #18,19,30,31,32)	7837032
34.	4.008	**SPRING**, G/S LVR (W/M.T.)	7804624
	4.008	**SPRING**, G/S LVR (W/A.T.)	7837378
35.	4.010	**BOWL**, G/S LVR (W/M.T.)	7812064
	4.010	**BOWL**, G/S LVR (W/A.T.)	7836169
36.	4.010	**SHROUD**, G/S BOWL (W/M.T.)	7815829
	4.010	**SHROUD**, G/S BOWL (W/A.T.)	7827076
37.	4.012	**WASHER**, SHIFT LVR HSG BRG WAV (W/M.T.)	7804447
38.	6.521	**BEARING**, BOWL LWR (W/M.T.)	7829532
	6.521	**BEARING**, BOWL LWR (W/A.T.)	7827111
39.	6.518	**JACKET**, STRG COL (W/M.T.)	7842726
	6.518	**JACKET**, STRG COL (W/A.T.)	7842684
40.	2.188	**SCREW**, IGN SW	7806433
	2.195	**STUD**, DIMMER & IGN SW MT	7846418
41.	2.188	**SWITCH**, IGN	1990115
42.	6.758	**SEAL**, DASH	7814387
43.	8.915	**NUT**, HEX (#10-24)	
44.	2.459	**SWITCH**, DIMMER	26019661
45.	2.459	**ROD**, DIMR SW ACTR	26002904
46.	6.522	**PROTECTOR**, STRG COL WIRING (157MM LG)	7830335
47.	6.524	**SHAFT**, STRG	7831538
48.	4.025	**TUBE**, STRG COL SHIFT	7842688
49.	4.027	**WASHER**, SHIFT TUBE THRUST	7832112
50.	4.027	**SPRING**, SHIFT TUBE RET LWR	7810567
51.	6.521	**ADAPTER**, LWR BRG	7805822
52.	6.521	**REINFORCEMENT**, LWR BRG ADAPTER	7804440
53.	6.521	**CLIP**, LWR BRG ADAPTER	7804439
54.	6.521	**BEARING**, LWR SHIFT TUBE	7805700
55.	4.025	**TUBE**, STRG COL SHIFT	7842689
56.	8.900	**BOLT**, HEX FLG HD (1/4"-20X3/8")	
	8.932	**WASHER**, INTER TTH LK (1/4")	
57.	4.032	**SPACER**, LWR SHIFT LVR	7805818
58.	4.030	**LEVER**, LOWER SHIFT (1ST & REV)	7838400
59.	6.500	**PLATE**, LWR BRG ADAP	7832865
60.	6.521	**ADAPTER**, SHF LWR BRG	7815998

© 1990 GENERAL MOTORS SERVICE PARTS OPERATIONS—LIGHT TRUCK 52R

61.	6.521	**RETAINER**, BRG ADAPTER	7815999
62.	6.521	**CLIP**, LWR BRG ADAPTER	7816001
63.	6.525	**BOLT**, INTER STRG SHAFT	7832907
64.	8.917	**NUT**, HEX FLG (M10X1.5, 9 PZOR)	
65.	6.525	**COUPLING**, W/PLUG, INTER STRG SHF	7831571
66.	6.525	**RETAINER**, INTER STRG SHAFT CPLG SEAL	7809408
67.	6.525	**BEARING**, STRG SHF UJT CPLG	5671921
68.	6.525	**SPRING**, STRG SHAFT CPLG	7809409
69.	6.525	**WASHER**, CPLG & CLAMP INTER SHAFT	7817454
70.	N.S.	**PIN**, SHF CPLG (PART OF #72)	
71.	N.S.	**SEAL**, SHF CPLG (PART OF #72)	
72.	6.526	**SHAFT**, W/CPLG, STRG INTER	7831570

© 1990 GENERAL MOTORS SERVICE PARTS OPERATIONS—LIGHT TRUCK 52R

NOTES

BLANK PAGE

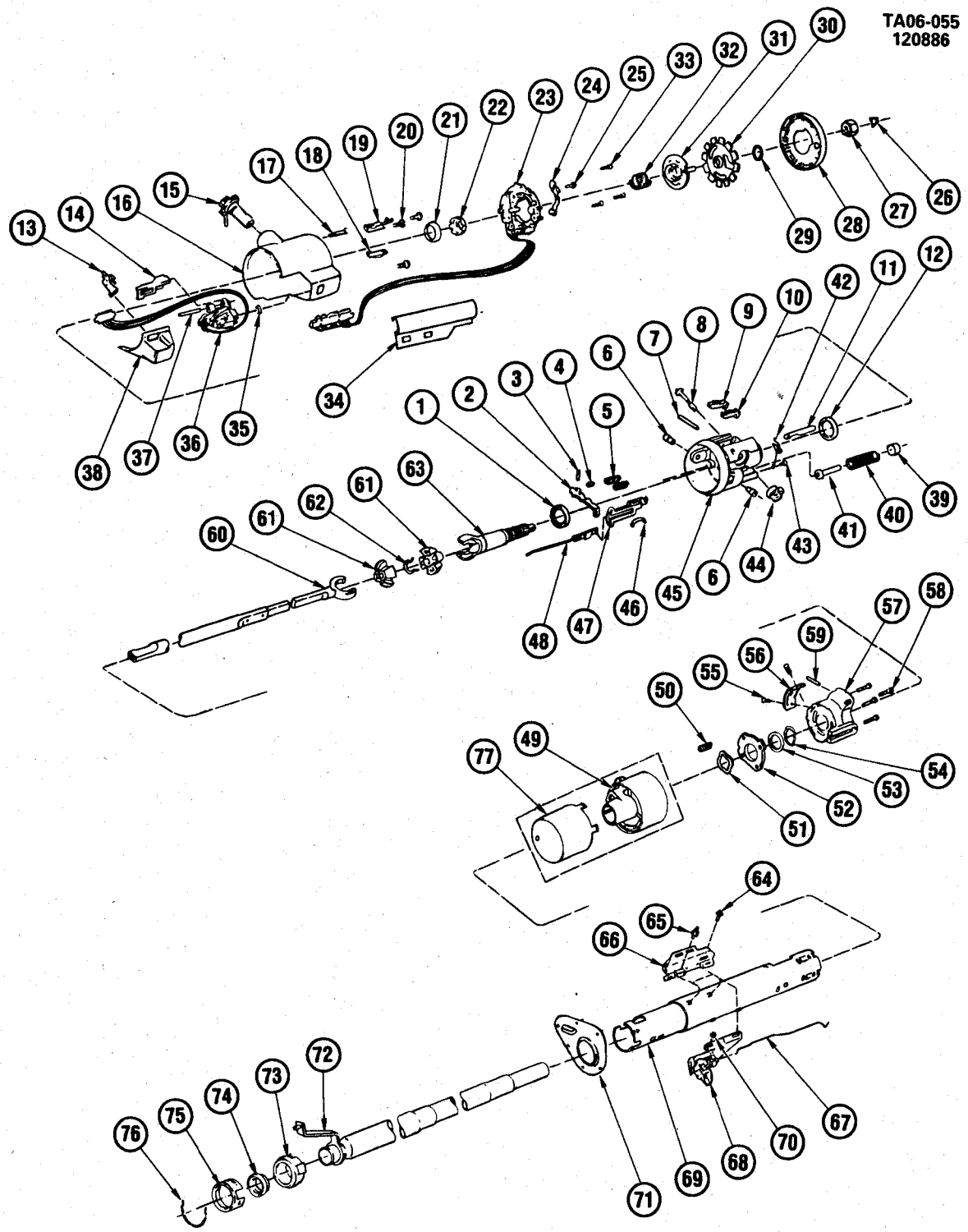

© 1990 GENERAL MOTORS SERVICE PARTS OPERATIONS—LIGHT TRUCK 52R

1985-1986 CK STEERING COLUMN/TILT WHEEL-A.T. COLUMN SHIFT
1987-1991 RV STEERING COLUMN/TILT WHEEL-A.T. COLUMN SHIFT

1.	6.521	**BEARING**, UPR SHF LWR
2.	6.514	**LEVER**, SHOE REL
3.	6.514	**PIN**, SHOE REL LVR
	6.514	**LEVER**, TILT WHL RELEASE
4.	6.514	**SPRING**, SHOE REL
5.	6.514	**SPRING**, LK SHOE REL
6.	N.S.	**PIN**, PIVOT(*1)
7.	6.514	**PIN**, TILT LK SHOE RET
8.	2.195	**SHAFT**, SW SECTOR
9.	6.514	**SHOE**, LK
10.	6.514	**SHOE**, LK
11.	6.500	**BOLT**, SHF LK
12.	6.521	**BEARING**, SHF LWR
13.	6.518	**CAP**, HOUSING COVER END
14.	2.459	**ACTUATOR**, DIMR SW
15.	2.188	**LOCK**, IGN
16.	6.518	**COVER**, LK HSG
17.	2.195	**SCREW**, LK RET
18.	2.195	**CLIP**, BUZZER, SW RET
19.	2.195	**SWITCH**, KEY BUZZER
20.	2.895	**SCREW**, (1/4X20X3/4)
21.	N.S.	**RACE**, UPR SFT & BRG(*1)
22.	N.S.	**SEAT**, UPR BRG INR RACE(*1)
23.	2.895	**SWITCH**, DIR SIG
	2.897	**LEVER**, DIR SIG
24.	2.895	**ARM**, DIR SW
25.	N.S.	**SCREW**, RD WASHER-HD
26.	6.515	**RETAINER**,
27.	8.915	**NUT**, (M14X1.5)
28.	6.500	**COVER**, SHF LK
29.	6.515	**RETAINER**,
30.	6.500	**LOCK**, SHF
31.	2.896	**CAM**, CANCEL
32.	6.521	**SPRING**, UPR BRG
33.	2.895	**SCREW**,
34.	2.906	**PROTECTOR**, WIRING
35.	2.459	**SPRING**, PIN PRELOAD
36.	2.459	**SWITCH**, W/PIVOT
37.	2.459	**PIN**, SW ACTR PIVOT
38.	6.518	**CAP**, DIMR SW HSG CVR END
39.	N.S.	**RETAINER**, SPR(*1)
40.	N.S.	**SPRING**, WHL TILT(*1)
41.	N.S.	**GUIDE**, SPRING(*1)
42.	N.S.	**SPRING**, LK BOLT(*2)
43.	6.500	**SCREW**, LK BOLT SPRING
44.	2.195	**SECTOR**, SW ACTR(*2)
45.	6.514	**HOUSING KIT**, COL
46.	2.195	**SPRING**, RACK PRELOAD
47.	2.195	**RACK**, SW ACTR
48.	2.195	**ACTUATOR**, IGN SW
49.	4.010	**BOWL**, G/S LVR
50.	4.008	**SPRING**, G/S LVR HSG
51.	4.419	**WASHER**, REV THRUST
52.	6.514	**PLATE**, SUPT LK
53.	6.521	**WASHER**, BOWL THRUST
54.	4.027	**RING**, SUPT RET
55.	4.012	**SCREW**, DETENT PLATE
56.	4.027	**GATE**, SHFT LVR
57.	6.518	**SUPPORT**, HSG
58.	6.514	**SCREW**, HSG SUPT
59.	6.514	**PIN**,
60.	6.524	**SHAFT**, STRG LWR
61.	6.514	**SPHERE**, SHFT CTR
62.	6.514	**SPRING**, CTR SPHERE
63.	6.524	**SHAFT**, W/RACE UPR
64.	2.188	**SCREW**,
65.	2.188	**STUD**, DIMMER MT
66.	2.188	**SWITCH**,
67.	2.459	**ROD**, DIMMER SW
68.	2.459	**SWITCH**, DIMMER
69.	6.518	**JACKET**, COL
70.	8.915	**NUT**, HEX (#10-24)

© 1990 GENERAL MOTORS SERVICE PARTS OPERATIONS—LIGHT TRUCK 52R

71.	6.758	**SEAL**, DASH BRG
72.	4.025	**TUBE**, SHFT
73.	6.521	**ADAPTER**, LWR BRG
74.	6.521	**BEARING**, SHF LWR
75.	6.521	**RETAINER**, BRG ADAP
76.	6.521	**CLIP**, LWR BRG ADAP
77.	4.010	**SHROUD**, BOWL

NOTE 1: PART OF SPRING KIT, TILT UPR, GROUP 6.521
NOTE 2: PART OF RACK KIT, W/COL SECTOR, GROUP 2.195

© 1990 GENERAL MOTORS SERVICE PARTS OPERATIONS—LIGHT TRUCK 52R

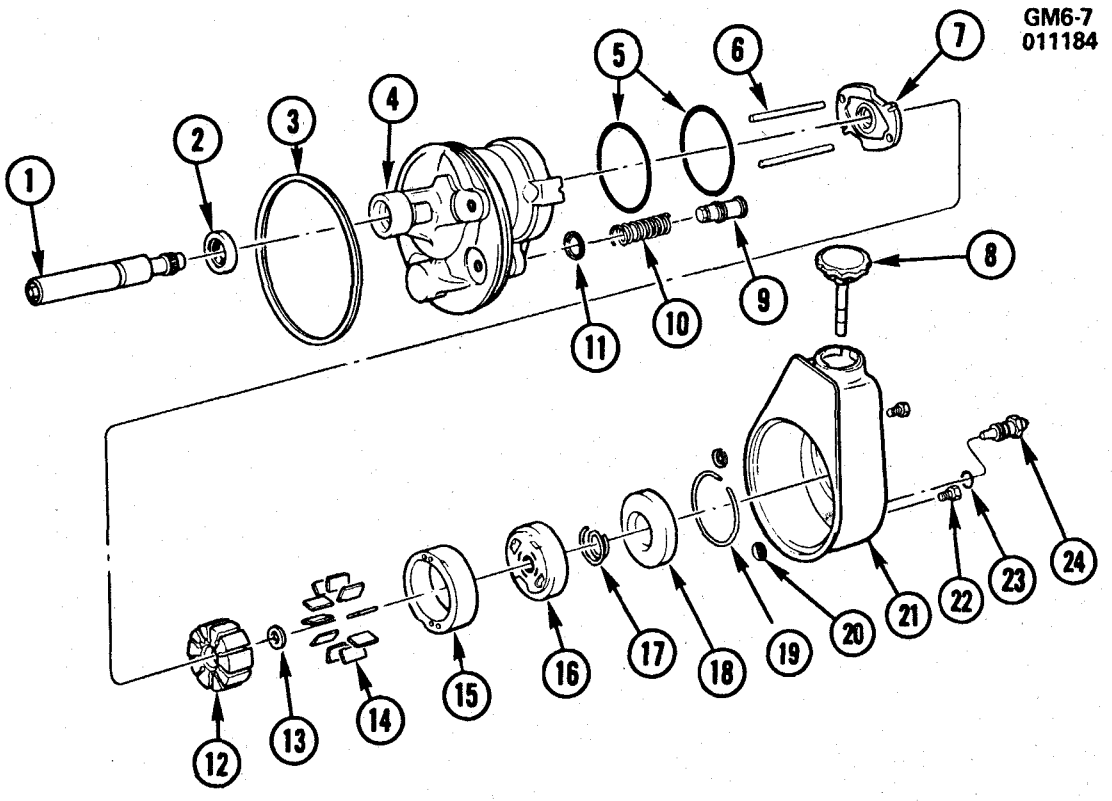

GM6-7

1985-1986 CK STEERING PUMP ASM
1987-1990 RV STEERING PUMP ASM

1.	6.614	**SHAFT**, PUMP DRIVE	7837321
2.	6.617	**SEAL**, PUMP SHAFT(*1)	7808195
3.	6.635	**SEAL**, RESERVOIR O RING(*1)	5688015
4.	6.608	**HOUSING**, PUMP (2.5R)	7830236
5.	6.609	**SEAL KIT**, PUMP(*1)	7848522
6.	6.608	**PIN**, PUMP RING DOWEL	5689357
7.	6.612	**PLATE KIT**, THRUST & PRESS	7839366
8.	6.635	**CAP**, FILLER	7834183
9.	6.624	**VALVE**, FLOW CONTROL	7809230
10.	6.612	**SPRING**, FLOW CONTROL	5688037
11.	6.674	**SEAL**, UNION TO PUMP HSG O RING(*1)	5688035
12.	N.S.	**ROTOR**, PUMP (PART OF #15)	
13.	6.616	**RING**, SHAFT RETAINER (PART OF #1,15)	7837284
14.	N.S.	**VANE**, ROTOR (PART OF #15)	
15.	6.610	**RING KIT**, ROTOR (INCL #12,13,14,15)	7837322
16.	6.612	**PLATE KIT**, THRUST & PRESSURE	7839366
17.	6.612	**SPRING**, PRESS PLATE	5688037
18.	6.609	**PLATE**, PUMP HSG END	5689358
19.	6.609	**RING**, END PLATE RETG	5688014
20.	6.635	**SEAL**, RESERVOIR(*1)	5688015
21.	6.635	**RESERVOIR**, PUMP	7842553
22.	8.900	**BOLT**, HEX (3/8X16X3/4)	
23.	6.674	**SEAL**, FITTING	5688035
24.	6.624	**FITTING**, W/ORIFICE	7830909

NOTE 1: ALSO PART OF SEAL KIT, GROUP 6.609

© 1990 GENERAL MOTORS SERVICE PARTS OPERATIONS—LIGHT TRUCK 52R

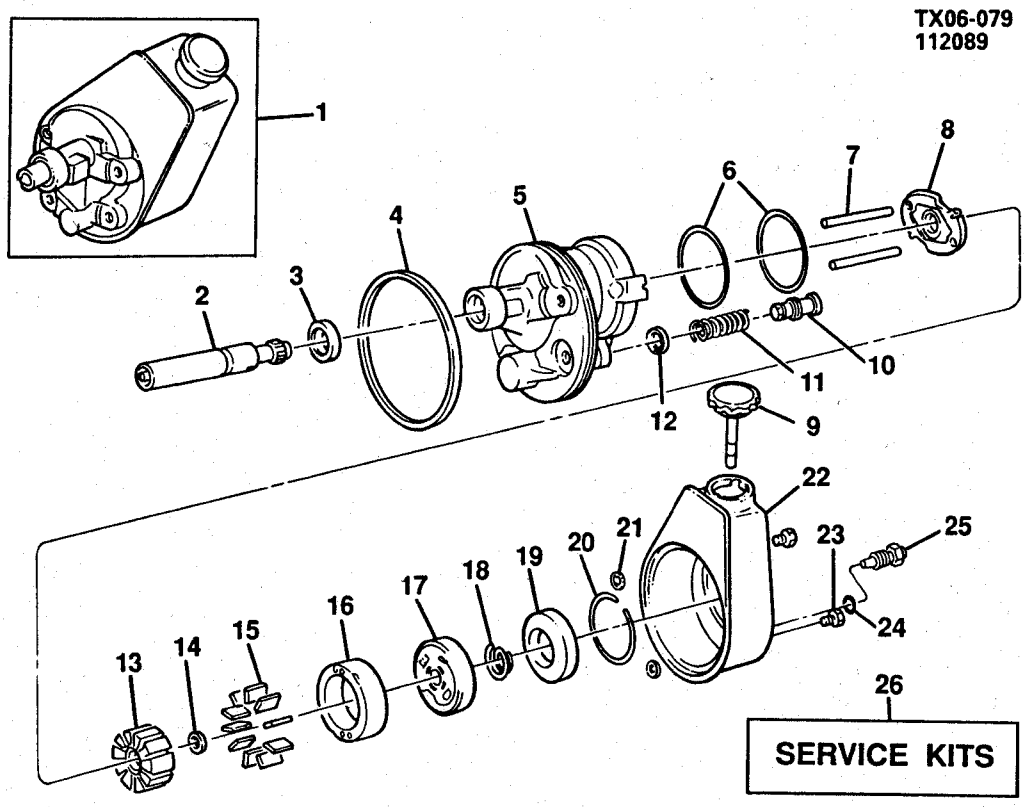

TX06-079R

© 1990 GENERAL MOTORS SERVICE PARTS OPERATIONS—LIGHT TRUCK 52R

1991 RV STEERING PUMP ASM

NOTE: QUANTITY IS ONE PER ASSEMBLY UNLESS OTHERWISE SPECIFIED.

1.	6.605	**PUMP** ,P/S(R1,2,3 W/LH6,LL4,C60)(*1)	26019736
	6.605	**PUMP** ,P/S(V1,2,3 W/LH6,LL4,C60)(*1)	26019737
	6.605	**PUMP** ,P/S(R1,2,3 W/LH6,LL4 (EXC C60))(*1)	26019738
	6.605	**PUMP** ,P/S(V1,2,3 W/LH6,LL4 (EXC C60))(*1)	26019739
	6.605	**PUMP** ,P/S(V3 W/L05)(*1)	26019740
	6.605	**PUMP** ,P/S(R3 W/L05)(*1)	26019741
	6.605	**PUMP** ,P/S(R3 W/L19)(*1)	26019742
	6.605	**PUMP** ,P/S(V3 W/L19)(*1)	26019743
	6.605	**PUMP** ,P/S(R1,2 (06) W/L05,L19)(*1)	26019744
	6.605	**PUMP** ,P/S(V1,2 W/L05)(*1)	26019745
2.	6.614	**SHAFT** ,W/RING,HYD STRG PUMP DR (INCL ITEM #14)	7837321
3.	6.617	**SEAL** ,DRIVE SHAFT(ALSO PART OF ITEM #5)(*KIT3)	7808195
4.	6.635	**SEAL** ,O RING HYD STRG PUMP (4 1/2 I.D.)(ALSO PART OF ITEM #22)(*KIT3)	5688015
5.	6.608	**HOUSING** ,HYD PUMP(R1,2,3 W/LH6,LL4,C60)(*2)	26009478
	6.608	**HOUSING** ,HYD PUMP(V1,2,3 W/LH6,LL4,C60)(*2)	26009478
	6.608	**HOUSING** ,HYD PUMP(R1,2,3 W/LH6,LL4 (EXC C60))(*2)	26009478
	6.608	**HOUSING** ,HYD PUMP(V1,2,3 W/LH6,LL4 (EXC C60))(*2)	26009478
	6.608	**HOUSING** ,HYD PUMP(V3 W/L05)(*2)	26009478
	6.608	**HOUSING** ,HYD PUMP(R3 W/L05)(*2)	26009478
	6.608	**HOUSING** ,HYD PUMP(R3 W/L19)(*2)	26009478
	6.608	**HOUSING** ,HYD PUMP(V3 W/L19)(*2)	26009478
	6.608	**HOUSING** ,HYD PUMP(R1,2 (06) W/L05,L19)(*2)	26010258
	6.608	**HOUSING** ,HYD PUMP(V1,2 W/L05)(*2)	26010258
6.	N.S.	**SEAL** ,HYD STRG PUMP(*KIT3)	
7.	6.608	**PIN** ,RING DOWEL (2 REQD)	5689357
8.	6.612	**PLATE** ,HYD STRG PUMP THRUST(ALSO PART OF KIT4)	7836369
9.	6.635	**CAP** ,RESERVOIR	7834183
10.	6.624	**VALVE** ,HYD STRG PUMP CONT(V1,2,3 W/LH6,LL4,C60)	7809232
	6.624	**VALVE** ,HYD STRG PUMP CONT(V1,2,3 W/LH6,LL4 (EXC C60))	7809232
	6.624	**VALVE** ,HYD STRG PUMP CONT(V3 W/L05)	7809232
	6.624	**VALVE** ,HYD STRG PUMP CONT(K310,314 W/L19)	7809232
	6.624	**VALVE** ,HYD STRG PUMP CONT(V3 W/L19)	7809232
	6.624	**VALVE** ,HYD STRG PUMP CONT(V1,2 W/L05)	7809232
	6.624	**VALVE** ,HYD STRG PUMP CONT(R1,2,3 W/LH6,LL4,C60)	7809230
	6.624	**VALVE** ,HYD STRG PUMP CONT(R1,2,3 W/LH6,LL4 (EXC C60))	7809230
	6.624	**VALVE** ,HYD STRG PUMP CONT(R3 W/L05)	7809230
	6.624	**VALVE** ,HYD STRG PUMP CONT(R3 W/L19)	7809230
	6.624	**VALVE** ,HYD STRG PUMP CONT(R1,2 (06) W/L05,L19)	7809230
11.	6.612	**SPRING** ,FLOW CONTROL	5688037
12.	6.609	**SEAL** ,HYD PUMP RECTANGULAR SECTION(*KIT3)	7848088
13.	N.S.	**ROTOR** ,(*KIT1)	
14.	6.616	**RING** ,DRIVE SHAFT RETAINING (ALSO PART OF ITEM #2)(*KIT1)	7837284
15.	N.S.	**VANE** ,(*KIT1)	
16.	6.611	**RING KIT** ,HYD PUMP(INCL ITEMS #13,14,15,16)(*KIT1)	
17.	6.612	**PLATE** ,PRESSURE(ALSO PART OF KIT4)	7839669
18.	6.612	**SPRING** ,PRESSURE PLATE(ALSO PART OF KIT4)	7839667
19.	6.609	**PLATE** ,END	5689358
20.	6.609	**RING** ,END PLATE RETAINING	5688014
21.	N.S.	**SEAL** ,(*KIT2,KIT3)	
22.	N.S.	**RESERVOIR** ,(*KIT2)	
	6.608	**MAGNET** ,HYD PUMP RESVR(*KIT3)	5692682
23.	6.635	**BOLT** ,RESERVOIR	7830239
	6.606	**STUD** ,P.S. PUMP MTG(R1,2,3 W/LH6,LL4,C60)	7831388
	6.606	**STUD** ,P.S. PUMP MTG(V1,2,3 W/LH6,LL4,C60)	7831388
	6.606	**STUD** ,P.S. PUMP MTG(R1,2,3 W/LH6,LL4 (EXC C60))	7831388
	6.606	**STUD** ,P.S. PUMP MTG(V1,2,3 W/LH6,LL4 (EXC C60))	7831388
	6.606	**STUD** ,P.S. PUMP MTG(V3 W/L05)	7831388
	6.606	**STUD** ,P.S. PUMP MTG(R3 W/L05)	7831388
	6.606	**STUD** ,P.S. PUMP MTG(R3 W/L19)	7831389
	6.606	**STUD** ,P.S. PUMP MTG(V3 W/L19)	7831389
	6.606	**STUD** ,P.S. PUMP MTG(R1,2 (06) W/L05,L19)	26009574
	6.606	**STUD** ,P.S. PUMP MTG(V1,2 W/L05)	26009574
24.	6.508	**SEAL** ,O RING UPR & LWR RACK(*KIT3)	7814503
25.	6.624	**FITTING** ,HYD PUMP UNION(INCLUDES ITEM #24)	7830913
26.	N.S.	**SEE SERVICE KITS BELOW**	

SERVICE KITS

KIT 1.	6.611	**RING KIT** ,HYD PUMP(R1,2,3 W/LH6,LL4,C60)(*3)	26021605
	6.611	**RING KIT** ,HYD PUMP(V1,2,3 W/LH6,LL4,C60)(*3)	26021605

© 1990 GENERAL MOTORS SERVICE PARTS OPERATIONS—LIGHT TRUCK 52R

SERVICE KITS

KIT	1.	6.611	RING KIT ,HYD PUMP(R1,2,3 W/LH6,LL4 (EXC C60))(*3)	26021605
		6.611	RING KIT ,HYD PUMP(V1,2,3 W/LH6,LL4 (EXC C60))(*3)	26021605
		6.610	RING KIT ,HYD PUMP(V3 W/L05)(*3)	26016720
		6.610	RING KIT ,HYD PUMP(R3 W/L05)(*3)	26016720
		6.610	RING KIT ,HYD PUMP(R3 W/L19)(*3)	26016720
		6.610	RING KIT ,HYD PUMP(V3 W/L19)(*3)	26016720
		6.610	RING KIT ,HYD PUMP(R1,2 (06) W/L05,L19)(*3)	26016720
		6.610	RING KIT ,HYD PUMP(V1,2 W/L05)(*3)	26016720
	2.	6.635	RESERVOIR KIT ,P/S FLUID(R1,2,3 W/LH6,LL4,C60)	7839497
		6.635	RESERVOIR KIT ,P/S FLUID(V1,2,3 W/LH6,LL4,C60)	7839497
		6.635	RESERVOIR KIT ,P/S FLUID(V1,2,3 W/LH6,LL4 (EXC C60))	7839499
		6.635	RESERVOIR KIT ,P/S FLUID(R1,2,3 W/LH6,LL4 (EXC C60))	7839499
		6.635	RESERVOIR KIT ,P/S FLUID(V3 W/L05)	7828926
		6.635	RESERVOIR KIT ,P/S FLUID(R3 W/L05)	7828926
		6.635	RESERVOIR KIT ,P/S FLUID(R3 W/L19)	7828922
		6.635	RESERVOIR KIT ,P/S FLUID(V3 W/L19)	7828922
		6.635	RESERVOIR KIT ,P/S FLUID(R1,2 (06) W/L05,L19)	26019668
		6.635	RESERVOIR KIT ,P/S FLUID(V1,2 W/L05)	26019668
	3.	6.609	SEAL KIT ,(INCLUDES ITEMS #4,6,12,21,24,25)	7848522
	4.	6.612	PLATE KIT ,PRESSURE & THRUST	7839366

NOTE 1: INCLUDES ITEMS (#2-25)
NOTE 2: INCLUDES ITEM #3
NOTE 3: INCLUDES ITEMS (#13,14,15,16)

RPO DEFINITIONS
C60 - HVAC SYSTEM, AIR CONDITIONER, FRT MAN CONTROLS
LH6 - ENGINE, DIESEL, 8 CYL, 6.2L
LL4 - ENGINE, DIESEL, 8 CYL, 6.2L, HEAVY DUTY
L05 - ENGINE, GAS, 8 CYL, 5.7L, 1TBI, V8
L19 - ENGINE, GAS, 8 CYL, 7.4L, 1TBI, V8

© 1990 GENERAL MOTORS SERVICE PARTS OPERATIONS—LIGHT TRUCK 52R

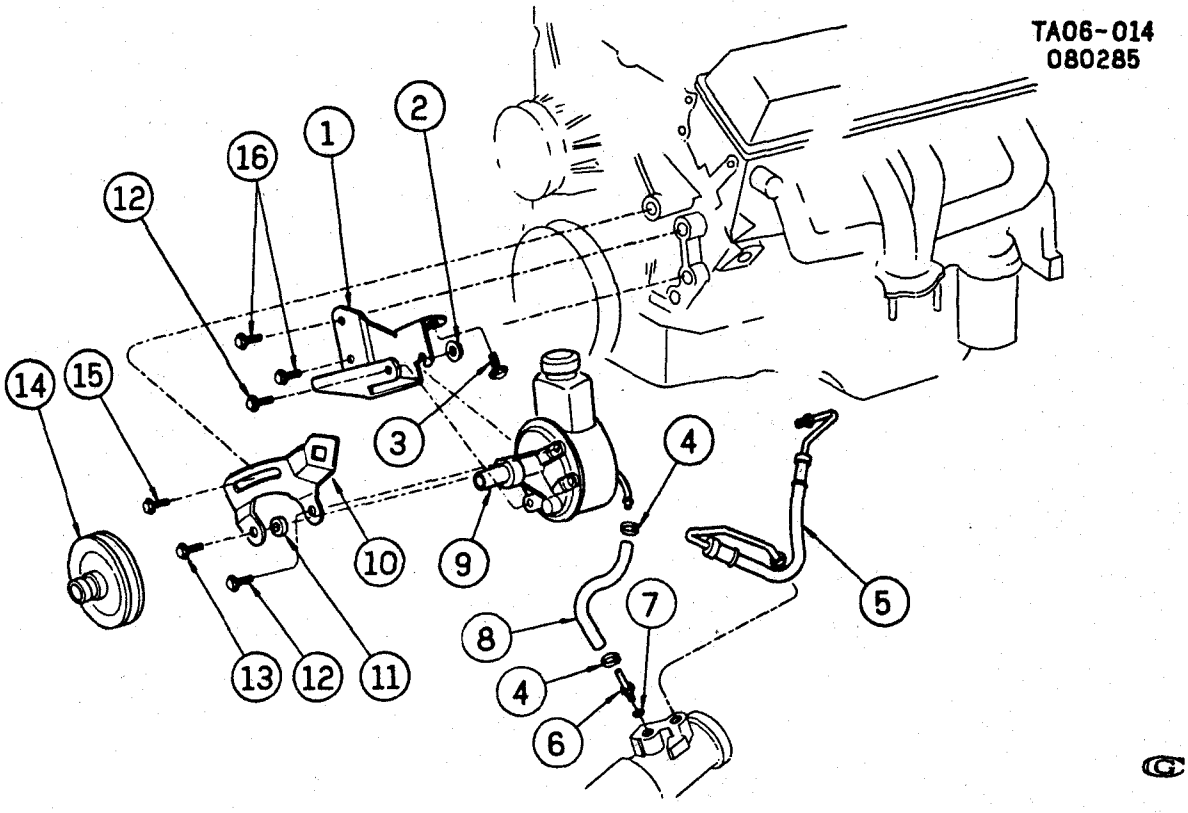

TA06-014

1985-1986 C2 STEERING PUMP MOUNTING & LINES (LE8/454)

1.	6.606	**BRACKET**, PUMP	14015392
2.	8.917	**NUT**, HFH (M10X1.5X10, POR)	
3.	8.900	**BOLT**, HFH (3/8-16X3/4, 300M PZOR)	
4.	8.948	**CLAMP**, WORM (.31 TO .75 DIA)(1.166)	
5.	6.670	**HOSE**, P.S. GEAR INLET	26006310
6.	6.671	**PIPE**, P.S. GEAR OTLT	22514738
7.	4.845	**SEAL**, HOSE O-RING (7.65X1.63)	26001594
8.	8.962	**HOSE**, BULK (3/8 IDX10 FT)	
9.	6.605	**PUMP**, P.S. (1985 W/H4D)(*1)	7839803
	6.605	**PUMP**, P.S. (1985 W/H5D)(1986 ALL)(*1)	26000518
10.	6.606	**BRACE**, PUMP ADJ	14015391
11.	6.606	**SPACER**, PUMP	3967424
12.	8.900	**BOLT**, HFH (M10X1.5X16, 9.8 PEOR)	
13.	8.900	**BOLT**, HFH (M10X1.5X25, 9.8 PZOR)	14063755
14.	6.655	**PULLEY**, PUMP (1985 W/H4D EXC C60)(*1)	14023172
	6.655	**PULLEY**, PUMP (1985 W/H4D & C60)(*1)	14084343
	6.655	**PULLEY**, PUMP (1985 W/H5D)(1986 ALL)(*1)	14103167
15.	8.900	**BOLT**, HFH (1/2-13X1, 280M POR)	
16.	8.900	**BOLT**, HFH (7/16-14X3/4, 280M POR)	

NOTE 1: H4D EMISSIONS IDENTIFIED BY CAST IRON EXHAUST MANIFOLD. H5D EMISSIONS IDENTIFIED BY STAINLESS STEEL TUBULAR EXHAUST MANIFOLD.

RPO DEFINITIONS
C60 - HVAC SYSTEM, AIR CONDITIONER FRT MAN CONTROLS

© 1990 GENERAL MOTORS SERVICE PARTS OPERATIONS—LIGHT TRUCK 52R

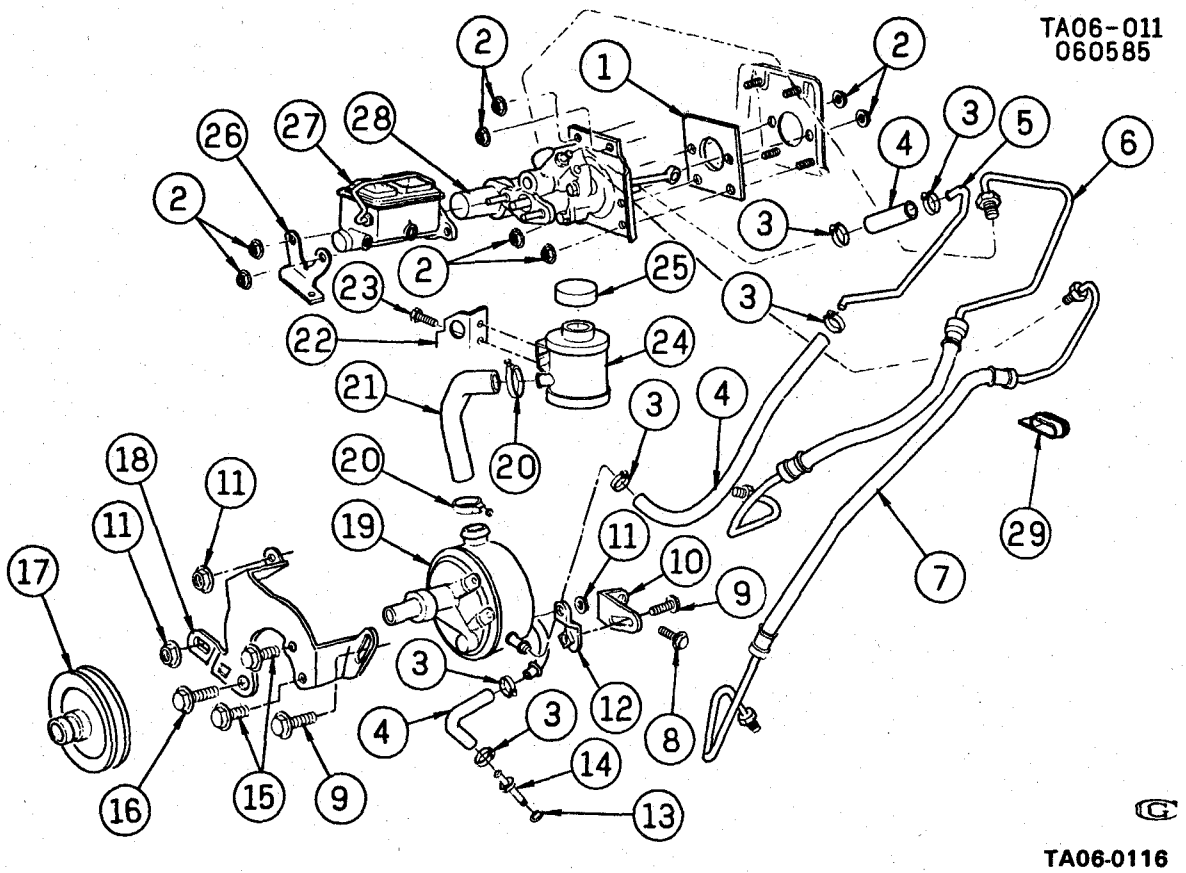

1985-1986 CK STEERING PUMP MOUNTING & LINES (LH6/6.2 C,LL4/6.2J)(W/A.C.)
1987-1988 RV STEERING PUMP MOUNTING & LINES (LH6/6.2 C,LL4/6.2J)(W/A.C.)

1.	4.805	**GASKET**, PWR BRK BOOS	14004810
2.	8.915	**NUT**, HEX FLG PREV TORQ (M10X1.5)	
3.	8.948	**CLAMP**, HEX HD WORM GEAR (5/16"TO3/4")	
4.	8.962	**HOSE** (3/8"ID)	
5.	8.964	**TUBING** (3/8"OD)	
6.	4.845	**HOSE**, PWR BRK BOOS INLET	26006305
7.	6.670	**HOSE**, STRG GEAR INLET	26006309
8.	8.900	**BOLT**, HEX (M10X1.5X20)(10.9/POR)	
	8.929	**WASHER**, FL (13/32"IDX13/16"ODX1/16"THK)	
9.	8.900	**BOLT**, HEX WA HD (M10X1.5X25)	
10.	6.606	**BRACKET**, PUMP RR	14033880
11.	8.917	**NUT**, HEX FLG & CON SPR (M10X1.5)	
12.	6.606	**BRACE**, PUMP	14033881
13.	4.845	**SEAL**, HOSE "O" RING (7.65X1.63)	26001594
14.	6.671	**PIPE**, STRG GEAR OTLT	22514738
15.	8.900	**BOLT**, HEX (M10X1.5X16)	
16.	8.900	**BOLT**, HEX (M10X1.5X30)	
	8.929	**WASHER**, FLAT (13/32"IDX13/16"ODX1/16"THK)	
	8.929	**WASHER**, BOWED SPRING (M10.5)	
17.	6.655	**PULLEY**, PUMP	15592123
18.	6.606	**BRACKET**, PUMP FRT ADJ	14033879
19.	6.605	**PUMP**, P.S./P.B. (C/R MODELS)(*2)	7838933
	6.605	**PUMP**, P.S./P.B. (K/V MODELS)(*2)	7838934
20.	8.948	**CLAMP**, WORM GEAR (.62 TO 1.25)	
21.	6.671	**HOSE**, FLUID RSVR	14040734
22.	0.004	**BRACKET**, ENG LIFT FRT	14033945
23.	8.900	**BOLT**, HEX (M8X1.25X16)	
	8.929	**WASHER**, FLAT (11/32"IDX11/16"ODX1/16"THK)	
24.	6.635	**RESERVOIR**, FLUID	14040733
25.	6.635	**CAP**, PUMP RESVR	7834183
26.	4.845	**BRACKET**, PWR BRK BOOS PIPE CLIP	14045698
27.	4.650	**CYLINDER**, BRK MASTER (SEE CATALOG)(*1)	
28.	4.805	**BOOSTER**, HYD PWR BRK (SEE CATALOG)(*1)	
29.	4.845	**CLIP**, PWR BRK BOOS PIPE	338696

NOTE 1: FOR INFORMATION ON SERVICEABLE DETAILS REFER TO APPLICABLE ASSEMBLY ILLUSTRATION, IN GROUP 4.000.

© 1990 GENERAL MOTORS SERVICE PARTS OPERATIONS—LIGHT TRUCK 52R

NOTE 2: FOR INFORMATION ON SERVICEABLE DETAILS REFER TO APPLICABLE ASSEMBLY ILLUSTRATION, IN GROUP 6.000.

© 1990 GENERAL MOTORS SERVICE PARTS OPERATIONS—LIGHT TRUCK 52R

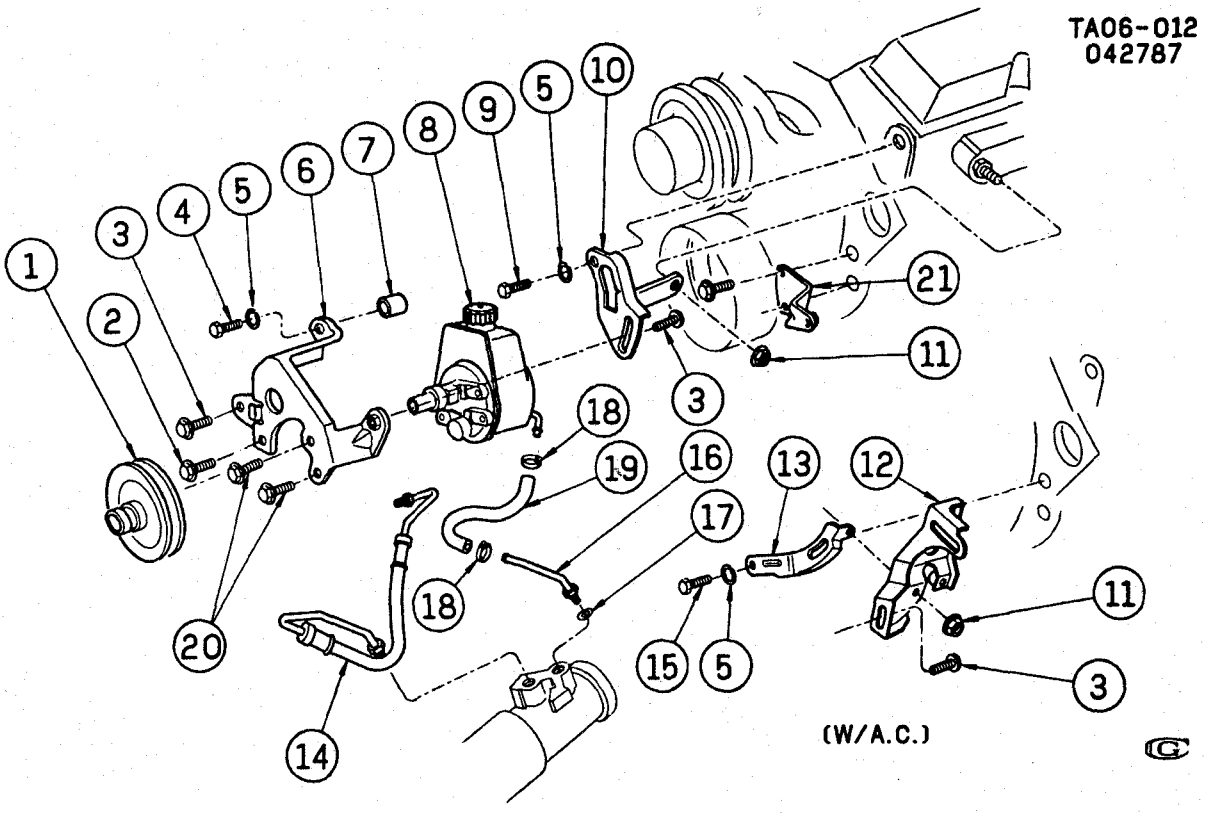

TA06-012

1985-1986 CK STEERING PUMP MOUNTING & LINES (LS9/350L)
1985-1986 CK STEERING PUMP MOUNTING & LINES (LT9/350M)(EXC HYD B RK /JB8)
1985-1986 CK STEERING PUMP MOUNTING & LINES (LB1/4.3N)
1985-1986 CK STEERING PUMP MOUNTING & LINES (LE9/305H,LF3/305F)

1.	6.655	**PULLEY**, PUMP (EXC A.C.)	14023172
	6.655	**PULLEY**, PUMP (W/A.C.)	14023173
2.	8.900	**BOLT**, PUMP, HEX FLG HD (M10X1.5X25)	14063755
3.	8.900	**BOLT**, HEX (3/8"-16X3/4")(280M)	
4.	8.900	**BOLT**, HEX (3/8"-16X1 1/4")(300M)	
5.	8.931	**WASHER**, SPR LK (3/8")	
6.	6.606	**BRACKET**, PUMP FRT ADJ	14081277
7.	6.606	**SPACER**, PUMP FRT ADJ BRKT (EXC A.C.)	3983422
8.	6.605	**PUMP**, P.S. (C/R MODELS)	7839818
	6.605	**PUMP**, P.S. (K/V MODELS)	7839797
9.	8.900	**BOLT**, HEX FLG HD (3/8"-16X3/4")(300M)	
10.	6.606	**BRACKET**, PUMP RR ADJ (EXC A.C.)	469560
11.	8.917	**NUT**, HEX FLG (3/8"-16)	
12.	9.171	**SUPPORT**, CMPR OTR (W/A.C.)	14103211
13.	6.606	**BRACKET**, PUMP RR ADJ (W/A.C.)	14082318
14.	6.670	**HOSE**, P.S. GEAR INL (W/305,350)	26010184
	6.670	**HOSE**, P.S. GEAR INL (W/4.3N)(FOR COMPLETE HOSE REPLACEMENT ALSO ORDER THE FOLLOWING NON-ILLUS ITEMS:	7845603
	6.673	**CONNECTOR**, INL HOSE (W/4.3N)	7847535
	6.673	**FITTING**, INL HOSE (W/4.3N)	7839119
15.	8.900	**BOLT**, HEX (3/8"-16X7/8")(300M)	
16.	6.671	**PIPE**, P.S. GR OTLT	7833191
17.	4.845	**SEAL**, HOSE "O"RING (7.65X1.63)	26001594
18.	8.948	**CLAMP**, HOSE WORM GEAR (5/16"TO3/4")	
19.	8.962	**HOSE**, BULK (3/8"ID)	
20.	8.900	**BOLT**, HFH (M10X1.5X16, 9.8 PEOR)	
21.	6.606	**BRACKET**, PUMP RR ADJ (W/5.0H/5.7K)	14031105

© 1990 GENERAL MOTORS SERVICE PARTS OPERATIONS—LIGHT TRUCK 52R

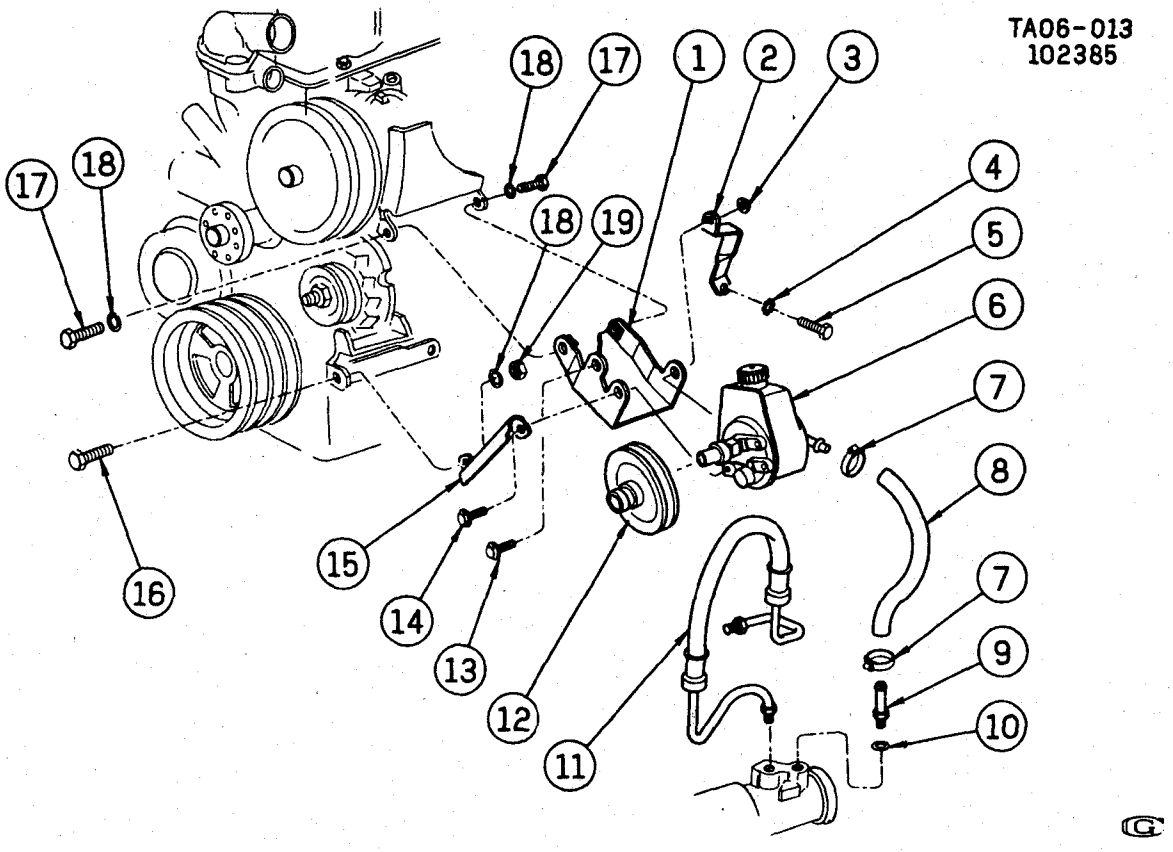

TA06-013

1985-1986 CK STEERING PUMP MOUNTING & LINES (L25/292T)(EXC HYD B RK /JB8)

1.	6.606	**BRACKET**, PUMP	14015360
2.	6.606	**BRACE**, PUMP RR	14015414
3.	8.917	**NUT**, HEX FLG HD (M10X1.5X10)	11506101
4.	8.932	**WASHER**, EXT TOOTH LK (7/16")	
5.	8.900	**BOLT**, HEX (3/8"-16X1 1/8")(300M)	
6.	6.605	**PUMP**, P.S. (K/V MODELS)	7839799
	6.605	**PUMP**, P.S. (C/R MODELS)	7839800
7.	8.948	**CLAMP**, HOSE WORM GEAR (5/16"TO3/4")	
8.	8.962	**HOSE**, BULK (3/8"ID) P.S. RETURN	
9.	6.671	**PIPE**, GEAR OTLT	22514738
10.	4.845	**SEAL**, HOSE O RING (7.65X1.63)	26001594
11.	6.670	**HOSE**, GEAR INL	7833369
12.	6.655	**PULLEY**, PUMP (EXC A.C.)	14023172
	6.655	**PULLEY**, PUMP (W/A.C.)	14025192
13.	8.900	**BOLT**, HEX W/SHAKEPROOF WA (M10X1.5X25)	
14.	8.900	**BOLT**, HEX (M10X1.5X20)	
	8.929	**WASHER**, FL (13/32"IDX13/16"ODX1/16"THK)	
15.	6.606	**BRACE**, PUMP FRT	14015362
16.	8.900	**BOLT**, HEX (3/8"-16X1")(300M)	
17.	8.900	**BOLT**, HEX (3/8"-16X1 1/4")(300M)	
18.	8.931	**WASHER**, SPR LK (3/8")	
19.	8.915	**NUT**, HEX (3/8X16X21/64, 301 ZN)	

© 1990 GENERAL MOTORS SERVICE PARTS OPERATIONS—LIGHT TRUCK 52R

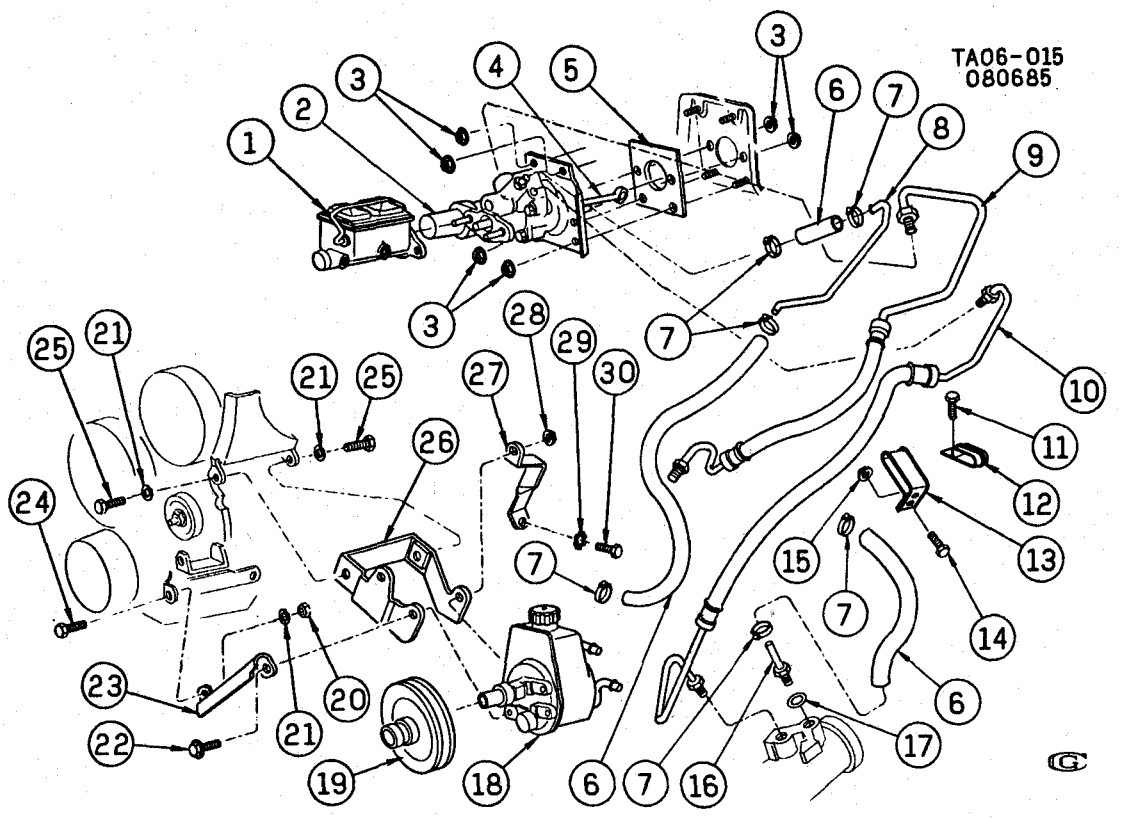

TA06-015

1985-1986 CK STEERING PUMP MOUNTING & LINES (L25/292T)
1987-1988 RV STEERING PUMP MOUNTING & LINES (L25/292T)

1.	4.650	**CYLINDER**, BRK MASTER	14066425
2.	4.805	**BOOSTER**, HYD PWR BRK	14055057
3.	8.917	**NUT**, HEX FLG PREV TORQ (M10X1.5)	
4.	4.658	**ROD**, PWR BOOS PED	345683
5.	4.805	**GASKET**, PWR BRK BOOS	14004810
6.	8.962	**HOSE**, BULK (3/8"ID)	
7.	8.948	**CLAMP**, HOSE HEX WORM GEAR (5/16"TO3/4")	
8.	8.964	**TUBING**, STL BULK (3/8"OD)	
9.	4.845	**HOSE**, P.B. BOOS INL	26013208
10.	6.670	**HOSE**, P.S. GEAR INL	26006307
11.	8.900	**BOLT**, HEX (5/16"-18X3/4")(300M)	
12.	4.845	**CLIP**, PWR BRK BOOS PIPE	338696
13.	4.845	**CLIP**, PWR BRK BOOS PIPE	14032991
14.	8.900	**BOLT**, HEX (1/4"-20X5/8")	
15.	8.917	**NUT**, HEX (1/4")	
16.	6.671	**PIPE**, P.S. GEAR OTLT	22514738
17.	4.845	**SEAL**, HOSE "O" RING (7.65MMIDX1.63MMTHK)	7829923
18.	6.605	**PUMP**, P.S./P.B. (C/R MODELS)	7839801
	6.605	**PUMP**, P.S./P.B. (K/V MODELS)	7839813
19.	6.655	**PULLEY**, PUMP (EXC A.C.)	14023172
	6.655	**PULLEY**, PUMP (W/A.C.)	14025192
20.	8.915	**NUT**, HEX (3/8X16X21/64, 301 ZN)	
21.	8.931	**WASHER**, SPR LK (3/8")	
22.	8.900	**BOLT**, HEX (M10X1.5X20)	
	8.929	**WASHER**, FL (13/32"IDX13/16"ODX1/16"THK)	
23.	6.606	**BRACE**, PUMP FRT	14015362
24.	8.900	**BOLT**, HEX (3/8"-16X1")	
25.	8.900	**BOLT**, HEX (3/8"-16X1 1/4")	
26.	6.606	**BRACKET**, PUMP	14015360
27.	6.606	**BRACE**, PUMP RR	14015414
28.	8.917	**NUT**, HEX FLG & CON SPR WA (M10X1.5)	
29.	8.932	**WASHER**, EXT TTH LK (7/16")	
30.	8.900	**BOLT**, HEX (3/8"-16X1 1/8")	

© 1990 GENERAL MOTORS SERVICE PARTS OPERATIONS—LIGHT TRUCK 52R

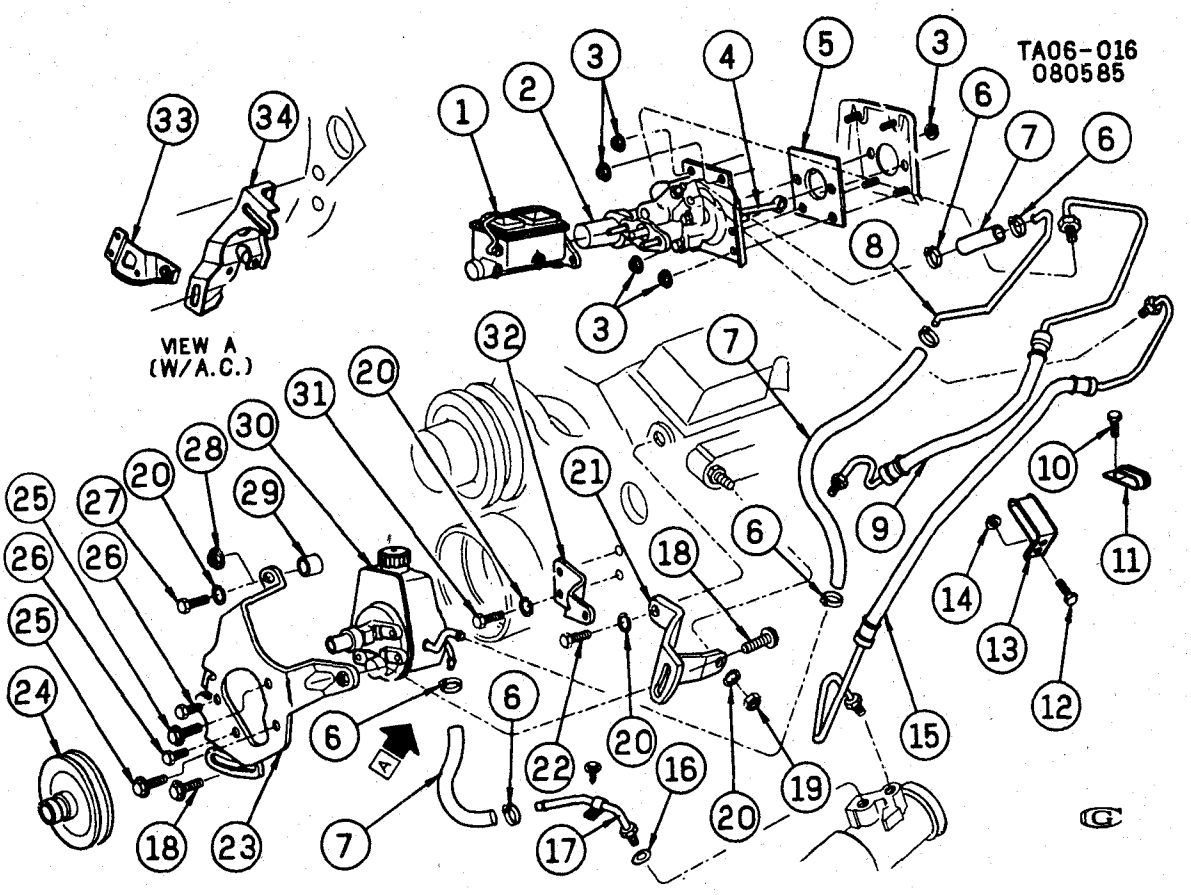

TA06-016

1985-1986 CK STEERING PUMP MOUNTING & LINES (LT9/350M)
1987-1988 RV STEERING PUMP MOUNTING & LINES (LT9/350M)

1.	4.650	**CYLINDER**, BRK MASTER	14066425
2.	4.805	**BOOSTER**, HYD PWR BRK	14055057
3.	8.917	**NUT**, FLG HEX HD (M10X1.5)	
4.	4.658	**ROD**, PWR BOOS PED	345683
5.	4.805	**GASKET**, PWR BRK BOOS	14004810
6.	8.948	**CLAMP**, HOSE WORM (5/16-3/4)	
7.	8.962	**HOSE**, BULK (3/8 IDX10 FT)	
8.	8.964	**TUBING**, STL BULK (3/8 ODX25 FT)	
9.	4.845	**HOSE**, P.B. BOOS INL	26006306
10.	8.900	**BOLT**, HEX (.312-18X.750, 300M)	
11.	4.845	**CLIP**, PWR BRK BOOS PIPE	338696
12.	8.900	**BOLT**, HEX (1/4-20X5/8, 280M ZP)	
13.	4.845	**CLIP**, PWR BRK BOOS PIPE	14032991
14.	8.917	**NUT**, HEX (.250-20, CZ)	
15.	6.670	**HOSE**, P.S. GEAR INL	26006307
16.	4.845	**SEAL**, HOSE O-RING (7.65MMIDX1.63MMTHK)	7829923
17.	6.671	**PIPE**, PUMP INL	7833191
18.	8.900	**BOLT**, HEX (.375-16X.750, 280M ZC)	
19.	8.915	**NUT**, HEX (3/8X16X21/64, 301 ZN)	
20.	8.931	**WASHER**, SPR LK (3/8X11/16, ZOR)	
21.	6.606	**BRACKET**, PUMP (EXC A.C.)	10085793
22.	8.900	**BOLT**, HFH (3/8-16X3/4, 300M PZOR)	
23.	4.845	**BRACKET**, PUMP FRT ADJ	14031106
24.	6.655	**PULLEY**, PUMP (EXC A.C.)	14023172
	6.655	**PULLEY**, PUMP (W/A.C.)	14023173
25.	8.900	**BOLT**, HFH (M10X1.5X25, 9.8 PZOR)	14063755
26.	8.900	**BOLT**, HFH (M10X1.5X16, 9.8 PEOR)	
27.	8.900	**BOLT**, HEX (3/8-16X1 1/8)(EXC A.C.)	
28.	8.917	**NUT**, HEX FLANGE (3/8-16, 286M)	
29.	6.606	**SPACER**, PUMP FRT ADJ BRKT (EXC A.C.)	3983422
30.	6.605	**PUMP**, P.S./P.B. (C/R MODELS)	7839802
	6.605	**PUMP**, P.S./P.B. (K/V MODELS)	7839798
31.	8.900	**BOLT**, HEX (3/8-16X7/8)	

© 1990 GENERAL MOTORS SERVICE PARTS OPERATIONS—LIGHT TRUCK 52R

32.	6.606	**BRACKET**, PUMP RR ADJ	**14031105**
33.	9.171	**SUPPORT**, A.C. CMPR	**14081273**
34.	9.171	**SUPPORT**, A.C. CMPR OTR	**14103211**

© 1990 GENERAL MOTORS SERVICE PARTS OPERATIONS—LIGHT TRUCK 52R

NOTES

BLANK PAGE

TR06-071
040789

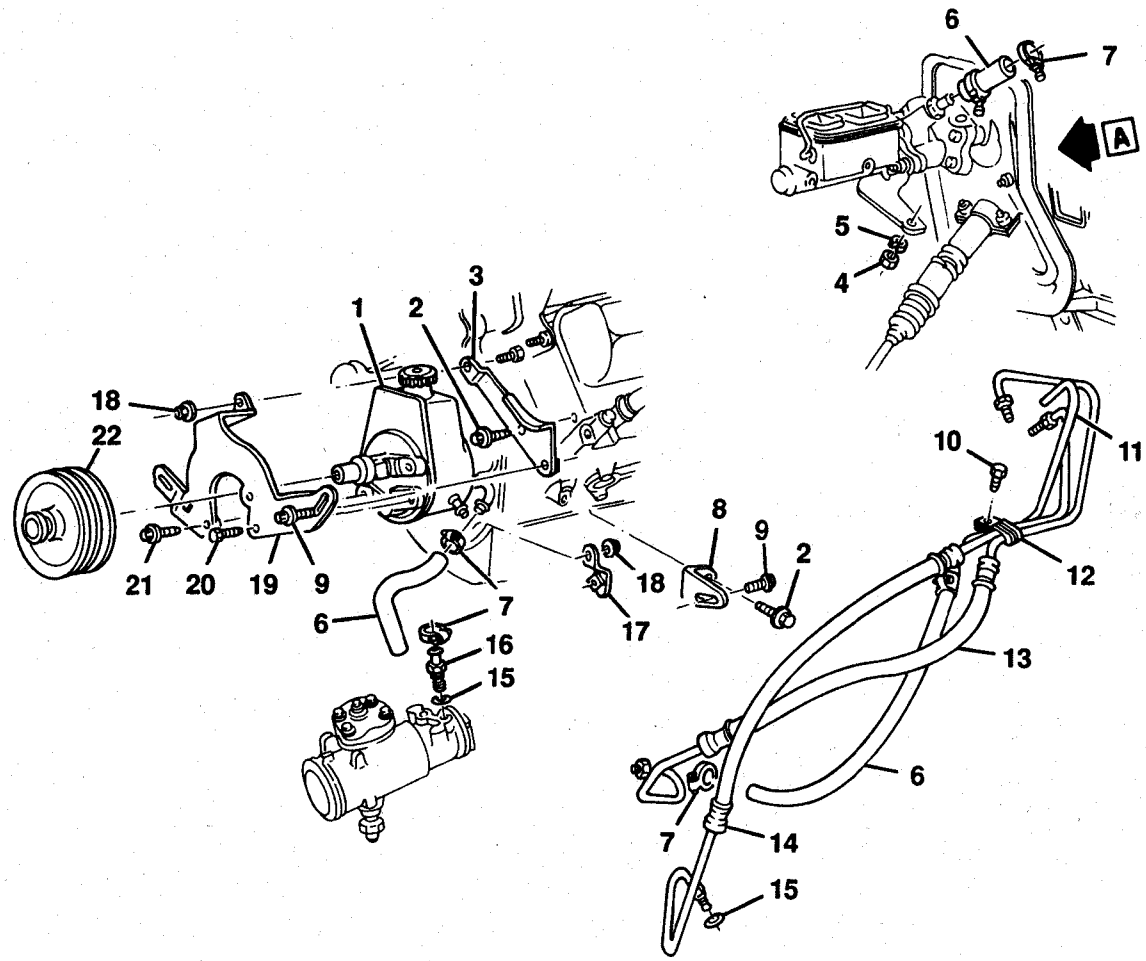

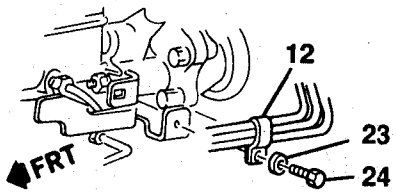

VIEW A
(06-16)

TR06-071

© 1990 GENERAL MOTORS SERVICE PARTS OPERATIONS—LIGHT TRUCK 52R

1985-1986 CK STEERING PUMP MOUNTING & LINES (LH6/6.2C,LL4/6.2J)(EXC A.C.)
1987-1991 RV STEERING PUMP MOUNTING & LINES (LH6/6.2C,LL4/6.2J)(EXC A.C.)

1.	6.605	**PUMP**, P.S. (SEE CATALOG)	
2.	8.900	**BOLT**, HEX (M10X1.5X20, 10.9 POR)	11504595
3.	6.606	**BRACKET**, P.S. PUMP	14033883
4.	8.915	**NUT**, HEX (5/16-18X1/4 286M POR)	9439493
5.	8.931	**WASHER**, SPR LK (5/16 PL)	9439511
6.	8.962	**HOSE**, BULK (3/8X10 FT)(CUT TO SIZE)	7828506
7.	8.948	**CLAMP**, WORM (.31 TO .75 DIA)(1.166)	477402
8.	6.606	**BRACKET**, P.S. PUMP RR ADJ	14033880
9.	8.900	**BOLT**, HWH (M10-1.5X25, 10.9 PH)	11502788
10.	8.900	**BOLT**, HEX (5/16-18X3/4 300M PC)	9424877
11.	8.964	**TUBING**, FUEL FLTR INL (3/8X25 FT)(CUT TO SIZE)(06-16)	3750950
	8.964	**TUBING**, STEEL 1/4 (3.358)(03-43)(CUT TO SIZE)	15618248
13.	4.845	**HOSE**, PWR BRK BOOS INLET	26006305
	4.845	**HOSE**, PWR BRK BOOS INL (RV1,2 06-16)(1990-91)	26014553
14.	6.670	**HOSE**, STRG GEAR INLET	26006309
15.	6.674	**SEAL**, (7.65MM IDX1.63MM THICK)	7829923
16.	6.671	**PIPE**, P.S. GEAR OTLT	22514738
17.	6.606	**BRACE**, P.S. PUMP	14033881
18.	8.917	**NUT**, HFH (M10X1.5X10, POR)	11506101
19.	6.606	**BRACKET**, P.S. PUMP FRT ADJ	14033879
20.	8.900	**SCREW**, HEX (M10X1.5X16, 9.8 ZC)(1985-87)	11513783
	8.900	**SCREW**, HEX (M10X1.5X16, 9.8 PE)	11513783
21.	8.900	**BOLT**, HFH (M10X1.5X30, 9.8)	11502607
22.	6.655	**PULLEY**, P.S. PUMP	15592123
23.	4.686	**WASHER**, FRT & RR BRK TUBE CLIP	15531203
24.	8.900	**BOLT**, HEX (5/16-18X5/8 280M)	180075

© 1990 GENERAL MOTORS SERVICE PARTS OPERATIONS—LIGHT TRUCK 52R

TR06-072
040789

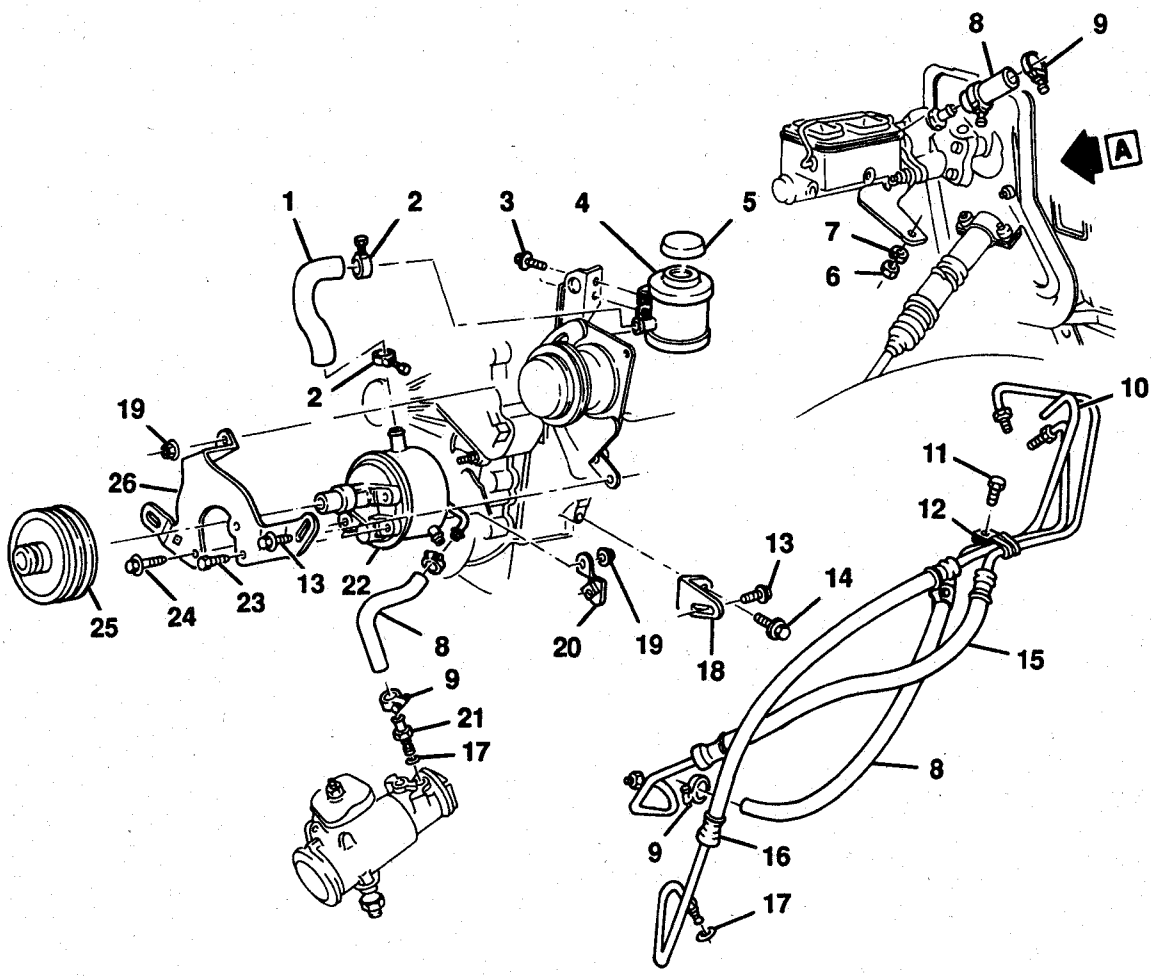

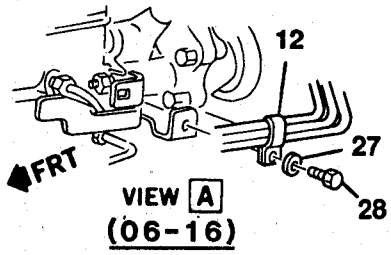

TR06-072

© 1990 GENERAL MOTORS SERVICE PARTS OPERATIONS—LIGHT TRUCK 52R

1985-1986 CK STEERING PUMP MOUNTING & LINES (LH6/6.2C,LL4/6.2J)(W/A.C.)
1987-1991 RV STEERING PUMP MOUNTING & LINES (LH6/6.2C,LL4/6.2J)(W/A.C.)

1.	6.671	**HOSE**, P.S. FLUID RSVR	14040734
2.	8.948	**CLAMP**, WORM TYPE (11/16 TO 1 5/16)	1470030
3.	8.900	**BOLT**, HEX (M8X1.25X16, 9.8 PS)	11509589
4.	6.635	**RESERVOIR**, P.S. FLUID	14040733
5.	6.635	**CAP**, P.S. PUMP RESVR	7834183
6.	8.915	**NUT**, HEX (5/16-18X.25 286M POR)	9439493
7.	8.931	**WASHER**, SPR LK (5/16 PL)	9439511
8.	8.962	**HOSE**, BULK (3/8 IDX10 FT)	7828506
9.	8.948	**CLAMP**, WORM (.31 TO .75 DIA)(1.166)	477402
10.	8.964	**TUBING**, FUEL FLTR INL (3/8X25 FT)(RV 06-16)	3750950
	8.964	**TUBING**, STEEL 1/4 (3.358)(RV 03-43)(CUT TO SIZE)	15618248
11.	8.900	**BOLT**, HEX (5/16-18X3/4 300M PC)	9424877
12.	4.845	**CLIP**, PWR BRK BOOS PIPE	338696
13.	8.900	**BOLT**, HWH (M10-1.5X25, 10.9 PH)	11502788
14.	8.900	**BOLT**, HEX (M10X1.5X20, 10.9 POR)	11504595
15.	4.845	**HOSE**, PWR BRK BOOS INL	26006305
	4.845	**HOSE**, PWR BRK BOOS INL (RV1,2 06-16)(1990-91)	26014553
16.	6.670	**HOSE**, STRG GEAR INL	26006309
	6.670	**HOSE**, P.S. GEAR INL (RV1,2 06-16)(1990-91)	26014554
17.	6.674	**SEAL**, (7.65MM IDX1.63MM THICK)	7829923
18.	6.606	**BRACKET**, P.S. PUMP RR ADJ	14033880
19.	8.917	**NUT**, HFH (M10X1.5X10, POR)	11506101
20.	6.606	**BRACE**, P.S. PUMP	14033881
21.	6.671	**PIPE**, P.S. GEAR OTLT	22514738
22.	6.605	**PUMP**, P.S. (SEE CATALOG)	
23.	8.900	**SCREW**, HEX (M10X1.5X16 9.8 PE)	11513783
24.	4.319	**BOLT**, HFH (M10X1.5X30.26 10.9 PEOR)(1985-88)	1640755
	8.900	**BOLT**, HFH (M10X1.5X30.26 10.9 PEOR)(1989-91)	11514121
25.	6.655	**PULLEY**, PWR BRK BOOS & P.S. PUMP	15592123
26.	6.606	**BRACKET**, PWR BRK & P.S. PUMP FRT ADJ	14033879
27.	4.686	**WASHER**, FRT & RR BRK TUBE CLIP	15531203
28.	8.900	**BOLT**, HEX (5/16-18X5/8 280M)	180075

© 1990 GENERAL MOTORS SERVICE PARTS OPERATIONS—LIGHT TRUCK 52R

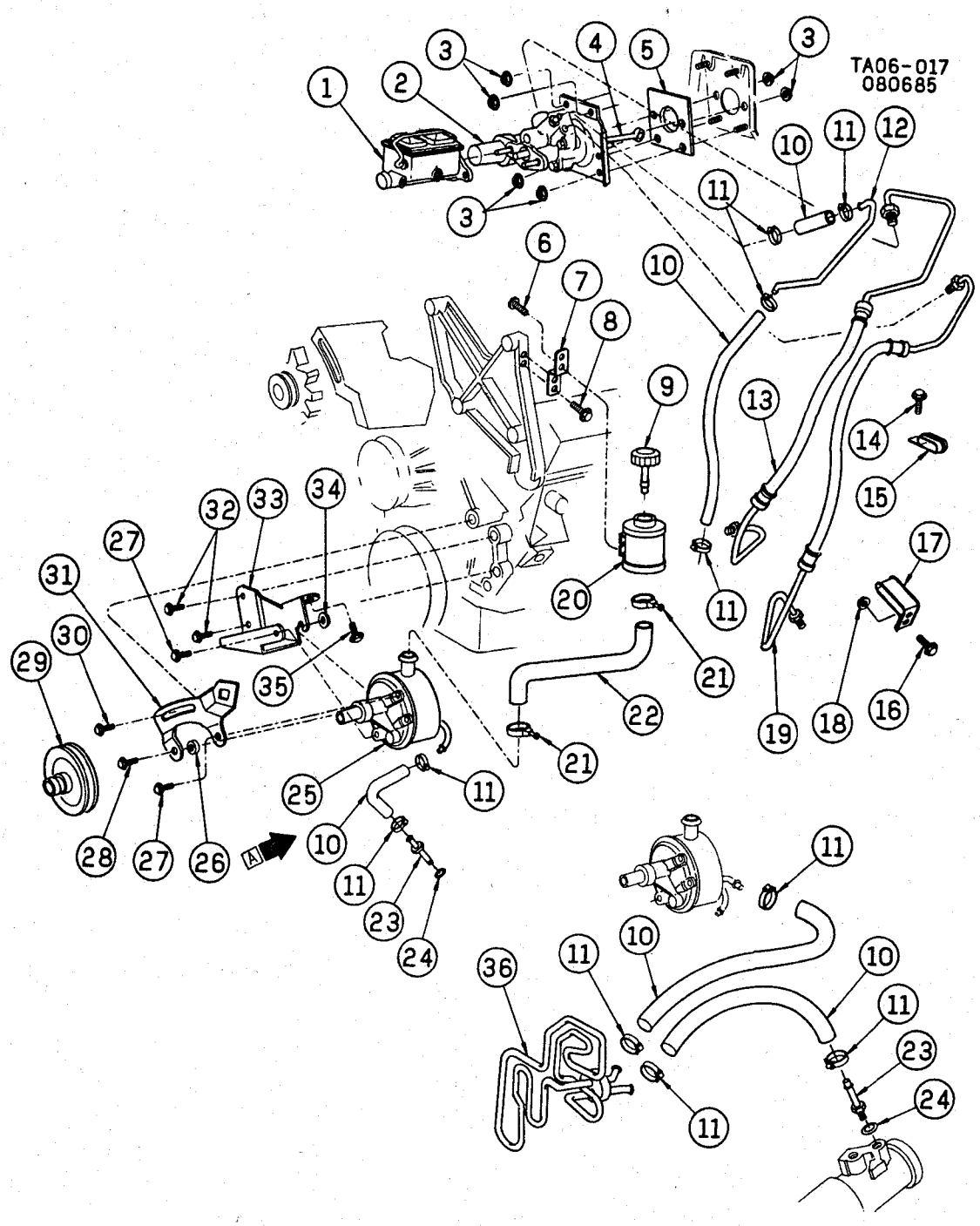

TA06-017

© 1990 GENERAL MOTORS SERVICE PARTS OPERATIONS—LIGHT TRUCK 52R

1985-1986 CK3 STEERING PUMP MOUNTING & LINES (LE8/454W)
1987-1989 RV3 STEERING PUMP MOUNTING & LINES (LE8/454W)

1.	4.650	**CYLINDER**, BRK MASTER	14066425
2.	4.805	**BOOSTER**, HYD PWR BRK	14055057
3.	8.917	**NUT**, HFH (M10X1.5)	11502812
4.	4.658	**ROD**, PWR BOOS PED	345683
5.	4.805	**GASKET**, PWR BRK BOOS	14004810
6.	8.900	**BOLT**, HFH (5/16-18X.56, 280M POR)	9440035
7.	6.635	**BRACKET**, FLUID RSVR (W/A.C.)	15592493
	6.635	**BRACKET**, FLUID RSVR (EXC A.C.)(1985 H4D ONLY)	14040766
8.	8.900	**BOLT**, HFH (3/8-16X.88, 280M POR)	9440169
9.	6.635	**CAP**, PUMP RESVR	7834183
10.	8.962	**HOSE**, BULK (3/8 IDX10 FT)	7828506
11.	8.948	**CLAMP**, WORM GEAR (.31 TO .75 DIA)	477402
12.	8.964	**TUBING**, STL (3/8 ODX25 FT)	3750950
13.	4.845	**HOSE**, P.B. BOOS INL	26006308
14.	8.900	**BOLT**, HEX (.312-18X.750, 300M)	9424877
15.	4.845	**CLIP**, PWR BRK BOOS PIPE	338696
16.	8.900	**BOLT**, HEX (1/4-20X5/8, 280M ZP)	180018
17.	4.845	**CLIP**, P.B. BOOS PIPE	14032991
18.	8.917	**NUT**, HEX (.250-20, CZ)	9422293
19.	6.670	**HOSE**, P.S. GEAR INL	26006307
20.	6.635	**RESERVOIR**, FLUID	14042351
21.	8.948	**CLAMP**, WORM TYPE (11/16 TO 1 5/16)	1470030
22.	6.671	**HOSE**, FLUID RSVR (1985 W/H4D)(*1)	14040767
	6.671	**HOSE**, FLUID RSVR(*1)	15592494
	8.962	**HOSE**, BULK (3/4X10 FT ROLL)	9438842
	6.671	**HOSE**, P.S. FLUID RSVR	14040767
23.	6.671	**PIPE**, GEAR OTLT	22514738
24.	4.845	**SEAL**, HOSE O RING (7/65MMIDX1.63MMTHK)	7829923
25.	6.605	**PUMP**, P.S./P.B. (C/R MODELS)	7839804
	6.605	**PUMP**, P.S./P.B. (K/V MODELS)	7839816
26.	6.606	**SPACER**, PUMP	3967424
27.	8.900	**BOLT**, HFH (M10X1.5X16, 9.8 POR)	11508581
	8.929	**WASHER**, FL (M10.8X18.8X2.3, 1050 PS)	11509161
28.	8.900	**BOLT**, HWH (M10X1.5X25, 10.9 PH)	11502788
29.	6.655	**PULLEY**, PUMP (W/H4D EXC A.C.)(*1)	14023172
	6.655	**PULLEY**, PUMP (1985 W/H4D & A.C.)(*1)	14084343
	6.655	**PULLEY**, PUMP (1985 W/H5D)(1986-88 ALL)(*1)	14103167
30.	8.900	**BOLT**, HFH (1/2-13X1.00, 280M POR)	9440350
	8.931	**WASHER**, SPR LK (.50X.87, ZOR)	9439514
	8.929	**WASHER**, PLAIN (.531, CZ)	120396
31.	6.606	**BRACE**, PUMP FRT	14015391
32.	8.900	**BOLT**, HFH (7/16-14X.75, 280M POR)	9440038
33.	6.606	**BRACKET**, PUMP	14015392
34.	8.917	**NUT**, HFH (M10X1.5, POR)	11506101
35.	8.900	**BOLT**, HFH (3/8-16X3/4, 300M PZOR)	9439905
36.	6.602	**PIPE**, FLUID CLG	14055558
	6.672	**GROMMET**, FLUID CLG PIPE (W/4.56R)(HC4)	343130

NOTE 1: H4D EMISSIONS IDENTIFIED BY CAST IRON EXHAUST MANIFOLD. H5D EMISSIONS IDENTIFIED BY STAINLESS STEEL TUBULAR EXHAUST MANIFOLD

© 1990 GENERAL MOTORS SERVICE PARTS OPERATIONS—LIGHT TRUCK 52R

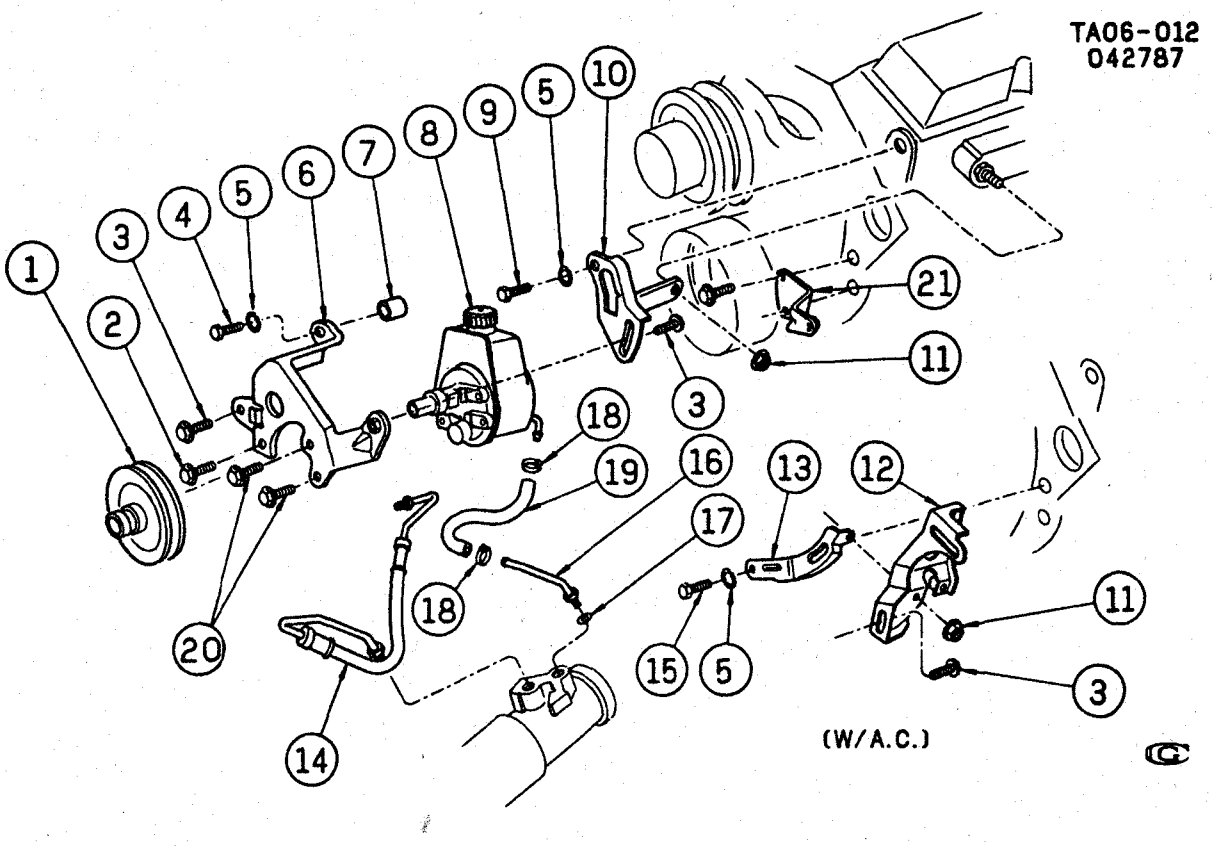

TA06-0125

1987 RV STEERING PUMP MOUNTING & LINES (LB4/4.3Z)

1.	6.655	PULLEY, PUMP (EXC A.C.)	14023172
	6.655	PULLEY, PUMP (W/A.C.)	14023173
2.	8.900	BOLT, PUMP, HEX FLG HD (M10X1.5X25)	14063755
3.	8.900	BOLT, HEX (3/8"-16 X 3/4")(280M)	
4.	8.900	BOLT, HEX (3/8"-16 X 1 1/4")(300M)	
5.	8.931	WASHER, SPR LK (3/8")	
6.	6.606	BRACKET, PUMP FRT ADJ (W/4.3Z)	14081277
	6.606	BRACKET, PUMP FRT ADJ (W/5.0H/5.7K)	14031106
7.	6.606	SPACER, PUMP FRT ADJ BRKT (EXC A.C.)	3983422
8.	6.605	PUMP, P.S. (SEE CATALOG)	
9.	8.900	BOLT, HEX FLG HD (3/8"-16 X 3/4")(300M)	
10.	6.606	BRACKET, P.S. PUMP RR ADJ (W/4.3Z)	14101199
	6.606	BRACKET, P.S. PUMP (W/5.0H/5.7K))	10085793
11.	8.917	NUT, HEX FLG (3/8"-16)	
12.	9.171	SUPPORT, CMPR OTR (W/A.C.)	14103211
13.	6.606	BRACKET, PUMP RR ADJ (W/4.3Z & A.C.)	14082318
14.	6.670	HOSE, P.S. GEAR INL (W/5.0H/5.7K)	26010184
	6.670	HOSE, P.S. GEAR INL (W/4.3N)	26002383
	4.845	SEAL (7.65X1.63)(W/4.3Z)	26001594
15.	8.900	BOLT, HEX (3/8"-16 X 7/8")(300M)	
16.	6.671	PIPE, P.S. GR OTLT	7833191
17.	4.845	SEAL, HOSE "O"RING (7.65X1.63)	26001594
18.	8.948	CLAMP, HOSE WORM GEAR (5/16" TO 3/4")	
19.	8.962	HOSE, BULK (3/8"ID)	
20.	8.900	BOLT, HFH (M10X1.5X16, 9.8 PEOR)	
21.	6.606	BRACKET, PUMP RR ADJ (W/5.0H/5.7K)	14031105

© 1990 GENERAL MOTORS SERVICE PARTS OPERATIONS—LIGHT TRUCK 52R

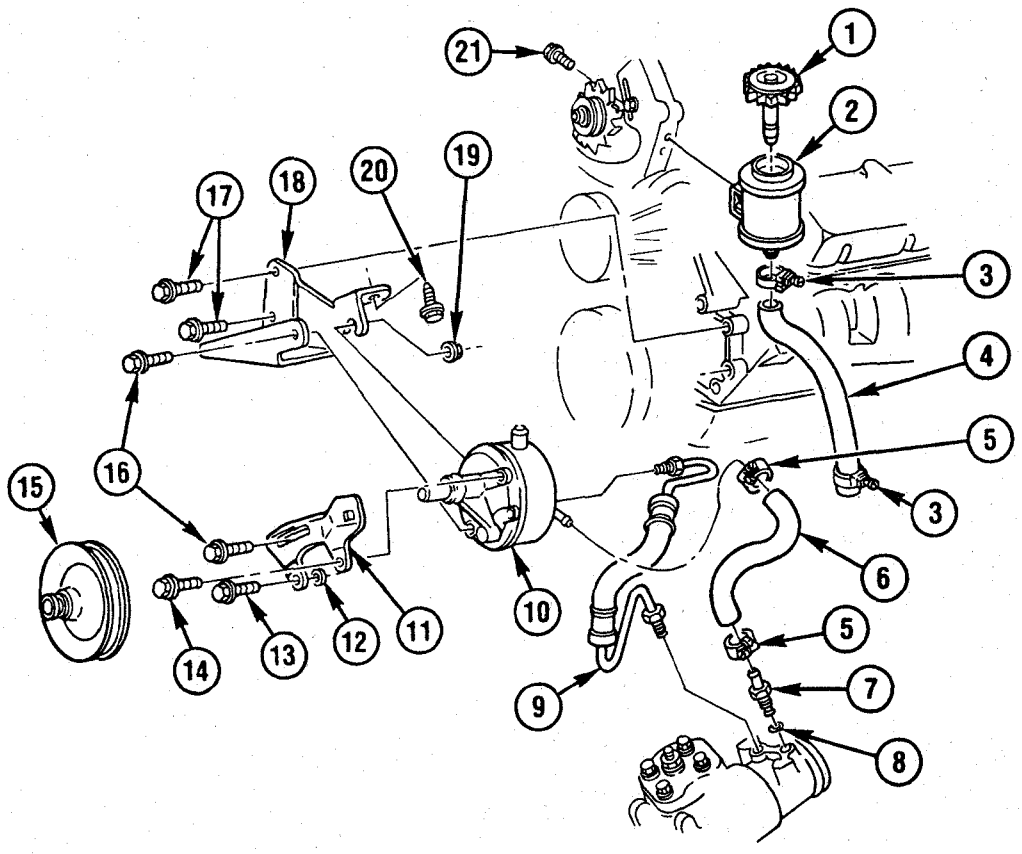

TR06-069

1987-1988 RV STEERING PUMP MOUNTING & LINES (L19/7.4N)
1989 R2(43) STEERING PUMP MOUNTING & LINES (L19/7.4N)

1.	6.635	**CAP**, PUMP RESVR	7834183
2.	6.635	**RESERVOIR**, FLUID	14042351
3.	8.948	**CLAMP**, WORM TYPE (11/16 TO 1 5/16)	1470030
4.	6.671	**HOSE**, FLUID RSVR	14040767
5.	8.948	**CLAMP**, WORM (.31 TO .75 DIA, ZC CHR)(1.166)	477402
6.	8.962	**HOSE**, OUTLET (3/8X24 FT)	9438373
7.	6.671	**PIPE**, GEAR OTLT	22514738
8.	6.674	**SEAL**, (7.65MM I.D.X 1.63MM THICK)	7829923
9.	6.670	**HOSE**, GEAR INL (1987-89)	26006310
10.	6.605	**PUMP**, P.S. (SEE CATALOG)	7839816
11.	6.606	**BRACE**, PUMP ADJ	14015391
12.	6.606	**SPACER**, PUMP	3967424
13.	8.900	**BOLT**, HFH (M10X1.5X25, 9.8 PZOR)	14063755
14.	8.900	**BOLT**, HFH (M10X1.5X16, 9.8 POR)	11508581
15.	6.655	**PULLEY**, PUMP (3 GRV)	14103167
16.	8.900	**BOLT**, HFH (1/2-13X1, 280M POR)	9440350
17.	8.900	**BOLT**, HFH (7/16-14X.75, 280M POR)	9440038
18.	6.606	**BRACKET**, PUMP	14015392
19.	8.917	**NUT**, HFH (M10X1.5X10, POR)	11506101
20.	8.900	**BOLT**, HFH (3/8-16X3/4, 300M PZOR)	9439905
21.	8.900	**BOLT**, HFH (5/16-18X.56, 280M POR)	9440035

© 1990 GENERAL MOTORS SERVICE PARTS OPERATIONS—LIGHT TRUCK 52R

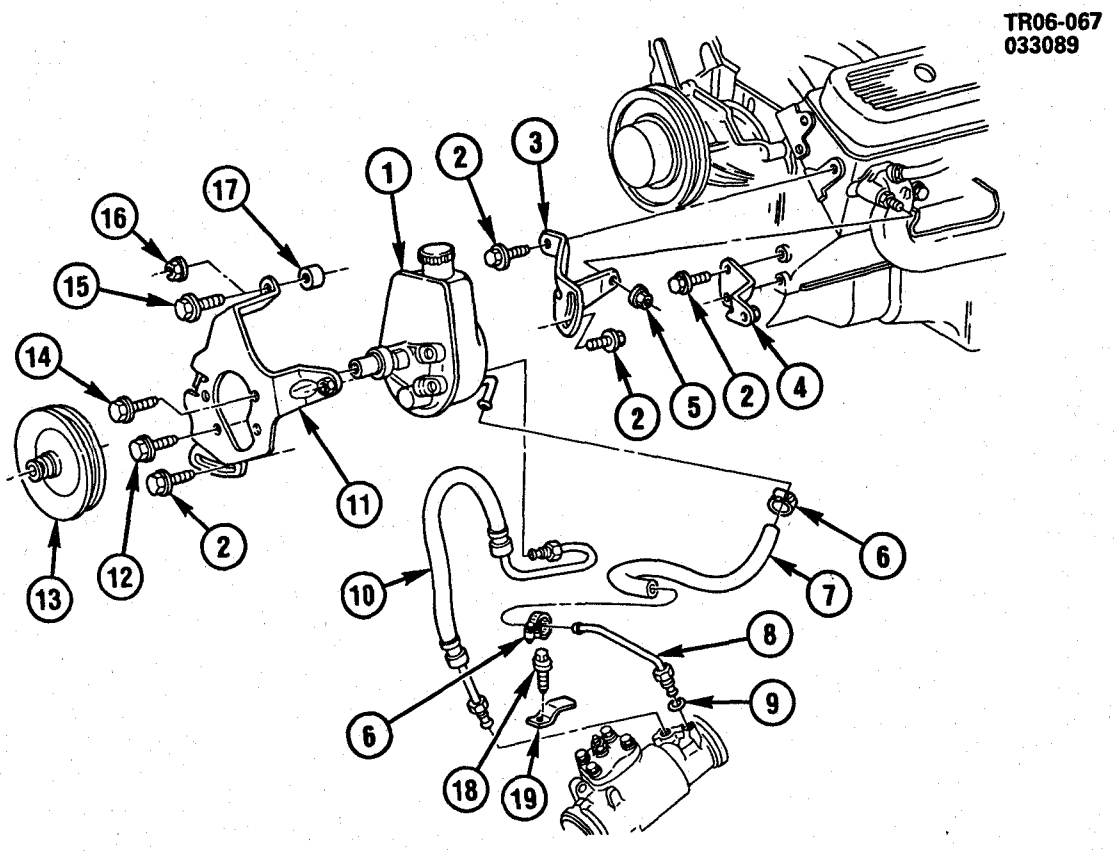

TR06-067

1987-1988 RV(06-16) STEERING PUMP MOUNTING & LINES (L05/5.7K)

1.	6.605	**PUMP**, P.S. (SEE CATALOG)	
2.	8.900	**BOLT**, HEX (.375-16X.750, 280M ZC)	180120
3.	6.606	**BRACKET**, PUMP	10085793
4.	6.606	**BRACKET**, PUMP RR ADJ	14031105
5.	8.917	**NUT**, HEX FLANGE (3/8-16, 286M)	14057004
6.	8.948	**CLAMP**, WORM (.31 TO .75 DIA)(1.166)	477402
7.	8.962	**HOSE**, BULK (3/8X24 FT)	9438373
8.	6.671	**PIPE**, GEAR OTLT	7833191
9.	6.674	**SEAL**, (7.65MM I.D.X 1.63MM)	7829923
10.	6.670	**HOSE**, GEAR INL	26010184
11.	6.606	**BRACKET**, PUMP FRT ADJ	14031106
12.	8.900	**BOLT**, HFH (M10X1.5X25, 9.8 PZOR)	14063755
13.	6.655	**PULLEY**, PUMP (EXC A.C.)	14023172
	6.655	**PULLEY**, PUMP (W/A.C.)	14023173
14.	8.900	**BOLT**, HFH (M10X1.5X16, 9.8 POR)	11508581
15.	8.900	**BOLT**, HEX (3/8-16X1.25, 280M PZOR)(EXC A.C.)	9440249
16.	8.917	**NUT**, HEX FLANGE (3/8-16, 286M)(W/A.C.)	14057004
17.	6.606	**SPACER**, PUMP FRT ADJ BRKT (EXC A.C.)	3983422
18.	8.977	**SCREW**, PAN HD C/R TAP (M6.3X1.81X25)	11508434
19.	8.950	**CLIP**, CLSD STEEL (7/16 X 5/16 ZC)	25526629

© 1990 GENERAL MOTORS SERVICE PARTS OPERATIONS—LIGHT TRUCK 52R

NOTES

BLANK PAGE

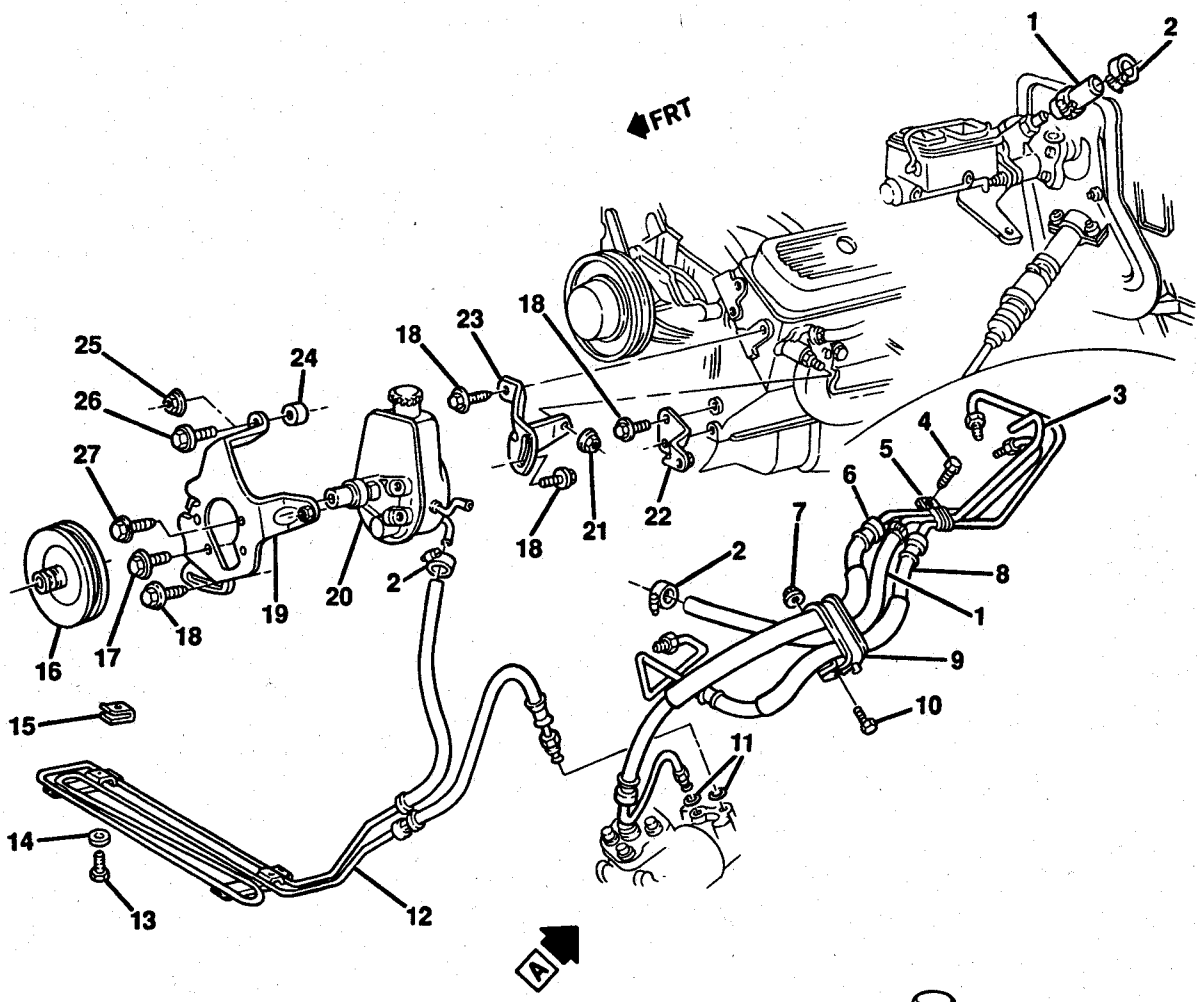

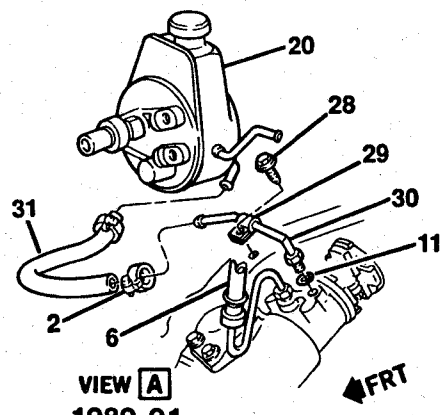

VIEW A
1989-91
(W/GT4, GT5, 5x2, 5x3)

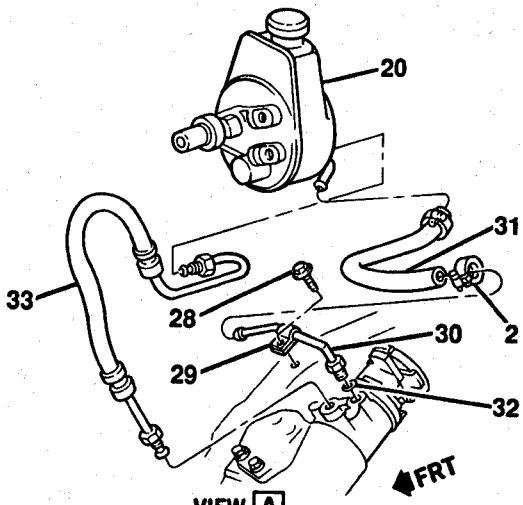

VIEW A
1987-89

TR06-301

© 1990 GENERAL MOTORS SERVICE PARTS OPERATIONS—LIGHT TRUCK 52R

1987-1991 RV(03-43) STEERING PUMP MOUNTING & LINES (L05/5.7K)

1.	8.962	**HOSE**, (3/8X10 FT)(CUT AS REQUIRED)	7828506
2.	8.948	**CLAMP**, WORM DRIVE SL HEX HD (.31X.75 ZC)	477402
3.	8.964	**TUBING**, STEEL (3/8X25 FT)(CUT AS REQUIRED)	3750950
4.	8.900	**BOLT**, HEX (.312-18X.750 300M PC)	9424877
5.	4.845	**CLIP**, POWER BRAKES BOOSTER PIPE	338696
6.	6.670	**HOSE**, POWER STEERING GEAR INLET	26006307
7.	8.917	**NUT**, HEX (.250-20 CZ)	9422293
8.	4.845	**HOSE**, POWER BRAKES BOOSTER INLET	26006306
9.	4.931	**CLIP**, POWER BRAKES BOOSTER HOSE	14032991
10.	8.900	**BOLT**, HEX (1/4-20X5/8 280M ZP)	180018
11.	6.674	**SEAL**, (7.65MMX1.63MM)	26001594
12.	6.600	**COOLER**, POWER STEERING FLUID	15610542
13.	8.900	**BOLT**, HEX (1/4-20X3/4 300M PC)	9425113
14.	8.929	**WASHER**, FLAT (.28X.50X.030 PC)	507295
15.	8.921	**NUT**, U-SHAPE (1/4-20X.50 ZP)	3982098
16.	6.655	**PULLEY**, POWER STEERING PUMP (EXC A.C.)	14023172
	6.655	**PULLEY**, POWER STEERING PUMP (W/A.C)	14023173
17.	8.900	**BOLT**, POWER STEERING PUMP BRACKET (M10X1.5X25 9.8 PZ)	14063755
18.	3.890	**BOLT**, HEX (.375-16X.750)	180120
19.	6.606	**BRACKET**, POWER STEERING PUMP FRONT ADJUSTER	14031106
20.	6.605	**PUMP**, POWER STEERING (SEE CATALOG)	
21.	8.917	**NUT**, HEX FLANGE (3/8-16 286M PC)	14057004
22.	6.606	**BRACKET**, POWER STEERING PUMP REAR ADJUSTER	14031105
23.	6.606	**BRACKET**, POWER STEERING PUMP REAR ADJUSTER	10085793
24.	6.606	**SPACER**, P/S PUMP FRT ADJUSTER BRACKET PIVOT (EXC A.C)	3983422
25.	8.917	**NUT**, HEX FLANGE (3/8-16 286M PC)(W/A.C)	14057004
26.	8.900	**BOLT**, HEX (3/8-16X1.25 280M PZOR)(EXC A.C)	9440249
27.	8.900	**BOLT**, HFH (M10X1.5X16 9.8 POR)	11508581
28.	8.900	**BOLT**, HFH (8X1.25X16 16.8 POR)	11508534
29.	8.950	**CLIP**, CLOSED STEEL (7/16X5/16 ZC)	25526629
30.	6.671	**PIPE**, POWER STEERING GEAR OUTLET	7833191
31.	8.962	**HOSE**, FUEL-OIL EVAP (3/8X24 FT)	9438373
32.	4.845	**SEAL**, (7.65MMX1.63MM)	7829923
33.	6.670	**HOSE**, POWER STEERING GEAR INLET	26010184

RPO DEFINITIONS
GT4 - AXLE REAR, 3.73 RATIO
GT5 - AXLE REAR, 4.10 RATIO
5X2 - AXLE REAR, WIDE TRACK DUAL, 3.73:1 RATIO
5X3 - AXLE REAR, WIDE TRACK DUAL, 4.10:1 RATIO

© 1990 GENERAL MOTORS SERVICE PARTS OPERATIONS—LIGHT TRUCK 52R

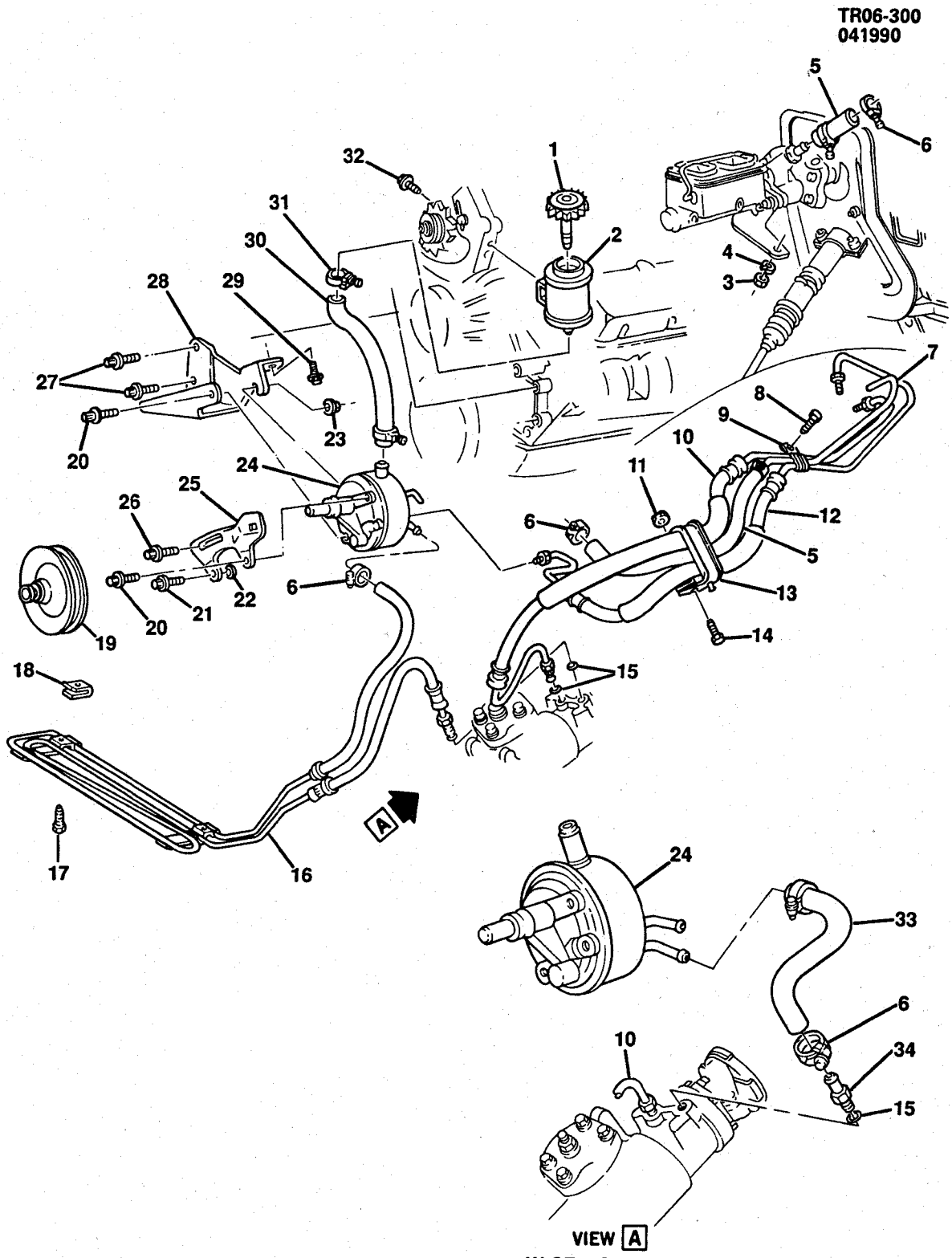

© 1990 GENERAL MOTORS SERVICE PARTS OPERATIONS—LIGHT TRUCK 52R

1989 RV(03) STEERING PUMP MOUNTING & LINES (L19/7.4N)
1989-1991 RV(43) STEERING PUMP MOUNTING & LINES (L19/7.4N)

1.	6.635	**CAP**, PWR STRG PUMP RESVR	7834183
2.	6.635	**RESERVOIR**, PWR STRG FLUID	14042351
3.	8.915	**NUT**, HEX (5/16-18X1/4 286M POR)	9439493
4.	8.931	**WASHER**, SPR LK (5/16 PL)	9439511
5.	8.962	**HOSE**, HYD STRG RETURN (3/8X10 FT)(CUT TO SIZE)	7828506
6.	8.948	**CLAMP**, TYPE F HOSE (5/16 TO 3/4 DIA ZC CHR)(1.166)	477402
7.	8.964	**TUBE**, HYD STRG GEAR OTLET(3/8X25 FT)(CUT TO SIZE)	3750950
8.	8.900	**BOLT**, HEX (5/16-18X3/4 300M PC)	9424877
9.	4.845	**CLIP**, PWR BRK BOOS PIPE	338696
10.	6.670	**HOSE**, PWR STRG GEAR INL	26006307
11.	8.917	**NUT**, HEX (1/4-20 CZ)	9422293
12.	4.845	**HOSE**, P.B. BOOS INL	26006308
13.	4.845	**CLIP**, PWR BRK BOOS PIPE	14032991
14.	8.900	**BOLT**, HEX (1/4-20X5/8 280M ZP)	180018
15.	6.674	**SEAL**, PWR STRG GEAR INLET HOSE NUT	7829923
16.	6.600	**COOLER**, POWER STEERING FLUID	15610542
17.	8.900	**BOLT**, HEX (1/4-20X3/4 300M PC)	9425113
	8.929	**WASHER**, FLAT (.28X.50X.030 PC)	507295
18.	8.921	**NUT**, U-SHAPE (1/4-20X.50 ZP)	3982098
19.	6.655	**PULLEY**, PWR STRG PUMP (3 GRV)	14103167
20.	8.900	**BOLT**, HFH (M10X1.5X25 9.8 PZOR)	14063755
21.	8.900	**BOLT**, HFH (M10X1.5X16 9.8 POR)	11508581
22.	6.606	**SPACER**, PWR STRG PUMP ADAPTER	3967424
23.	8.917	**NUT**, HFH (M10X1.5X10 POR)	11506101
24.	6.605	**PUMP**, BWR BRK BOOS & P.S. (SEE CATALOG)	
25.	6.606	**BRACE**, PWR STRG PUMP ADJ	14015391
26.	8.900	**BOLT**, HFH (1/2-13X1.00 280M POR)	9440350
27.	8.900	**BOLT**, HFH (7/16-14X.75 280M POR)	9440038
28.	6.606	**BRACKET**, PWR STRG PUMP	14015392
29.	8.900	**BOLT**, HFH (3/8-16X3/4 300M PZOR)	9439905
30.	6.671	**HOSE**, PWR STRG FLUID RSVR	14040767
31.	8.948	**CLAMP**, WORM TYPE (11/16 TO 1 5/16)	1470030
32.	8.900	**BOLT**, HFH (5/16-18X9/16 280M POR)	9440035
33.	8.962	**HOSE**, FUEL-OIL EVAP (3/8X24 FT)(CUT TO SIZE)	9438373
34.	6.671	**PIPE**, PWR STRG GEAR OTLT	22514738

RPO DEFINITIONS
GT4 - AXLE REAR, 3.73 RATIO
GU6 - AXLE REAR, 3.42 RATIO
5X2 - AXLE REAR, WIDE TRACK DUAL 3.73:1 RATIO

© 1990 GENERAL MOTORS SERVICE PARTS OPERATIONS—LIGHT TRUCK 52R

TR06-302
042690

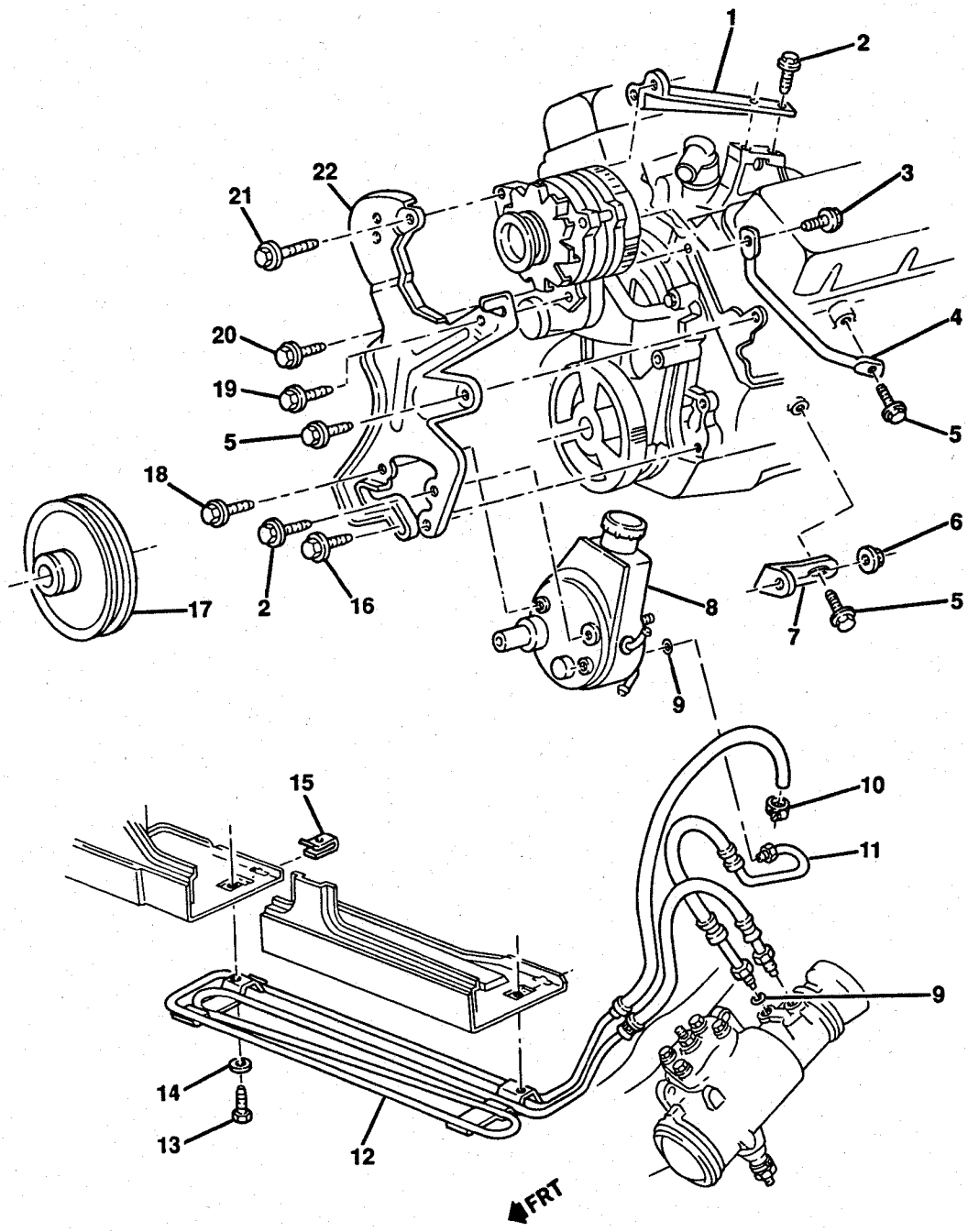

TR06-302

© 1990 GENERAL MOTORS SERVICE PARTS OPERATIONS—LIGHT TRUCK 52R

1989-1991 R2(06) STEERING PUMP MOUNTING & LINES (L19/7.4N)

1.	2.277	**BRACE**, GENERATOR REAR	14103109
2.	8.900	**BOLT**, HFH (M10X1.5X16 9.8 POR)	11508581
3.	8.900	**BOLT**, HFH (M8X1.25X25 9.8 POR)	11508106
4.	2.277	**BRACE**, GENERATOR	10045757
5.	8.900	**BOLT**, HFH (3/8-16X3/4 PZOR)	9439905
6.	8.915	**NUT**, HFH (M10X1.5X11,21 OD)	11503643
7.	6.606	**BRACE**, POWER STEERING PUMP REAR	14103108
8.	6.605	**PUMP**, POWER STEERING	26019744
9.	6.674	**SEAL**, (7.65MMX1.63MM)	26001594
10.	8.948	**CLAMP**, HOSE WORM DRIVE SL HEX HD (.31X.75 ZC)	477402
11.	6.670	**HOSE**, POWER STEERING GEAR INLET	26010184
12.	6.600	**COOLER**, POWER STEERING FLUID	15610542
13.	8.900	**BOLT**, HEX (1/4-20X3/4 300M PC)	9425113
14.	8.929	**WASHER**, FLAT (.28X.50X.030 PC)	507295
15.	8.921	**NUT**, U-SHAPE (1/4-20)	3982098
16.	8.900	**BOLT**, HFH (7/16-14X.75 280M POR)	9440038
17.	6.655	**PULLEY**, POWER STEERING PUMP	14103114
18.	8.900	**BOLT**, GENERATOR BRACKET TO CYLINDER HD (M10X1.5X25)	14063755
19.	2.277	**SCREW**, W/SPLASH WASHER,GENERATOR ADJUSTER (M8X1.25)	
20.	8.900	**SCREW**, HWH W/SERRATED FACE (3/8-16X.75 ZP)	15521977
21.	8.900	**BOLT**, HFH (M10X1.5X75 10.9 PZOR)	11508497
22.	2.277	**BRACKET**, GENERATOR & POWER STEERING PUMP	14103106

© 1990 GENERAL MOTORS SERVICE PARTS OPERATIONS—LIGHT TRUCK 52R

TR06-070
071288

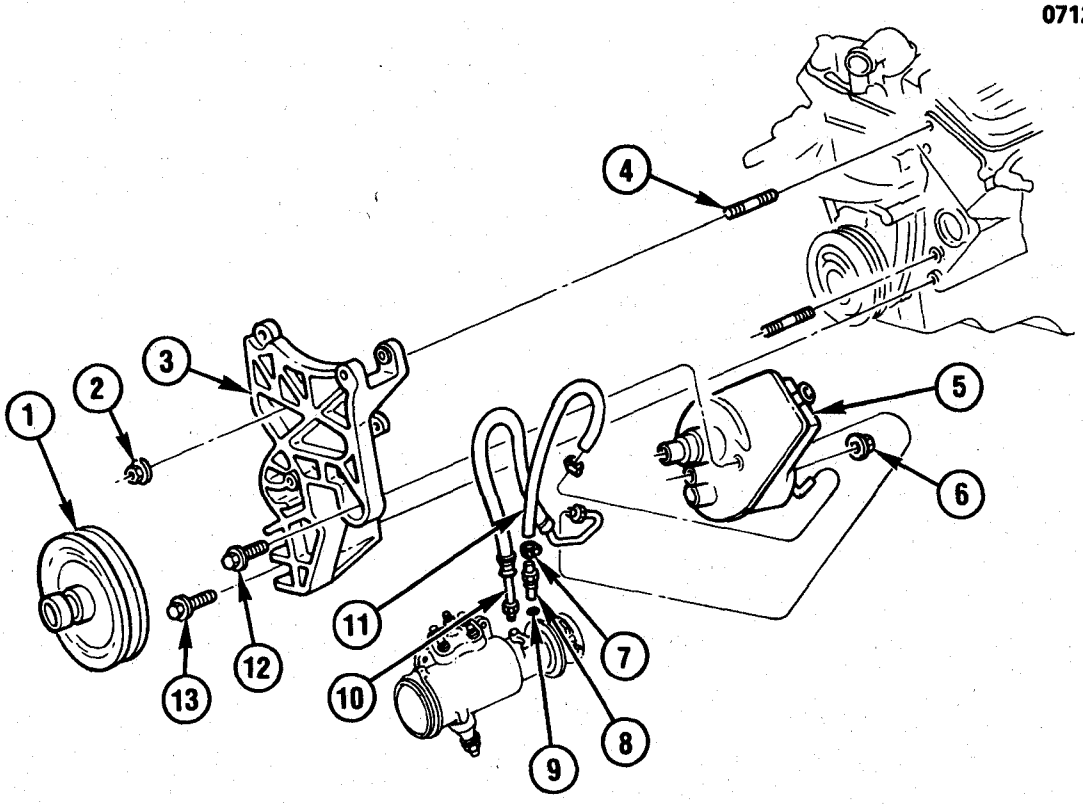

TR06-070

1989-1991 RV(06-16) STEERING PUMP MOUNTING & LINES (L05/5.7K)

1.	6.655	**PULLEY**, PUMP (EXC A.C.)	14023172
	6.655	**PULLEY**, PUMP (W/A.C.)	14023173
2.	8.917	**NUT**, HEX FLANGE (3/8-16, 286M)	14057004
3.	2.277	**BRACKET**, GEN & P.S. PUMP	10118701
4.	3.655	**STUD**, DRV BELT TENS BRKT	10055883
5.	6.605	**PUMP**, P.S. (SEE CATALOG)	
6.	8.915	**NUT**, HEX (M10X1.5X9 10 ZF)	11514603
7.	8.948	**CLAMP**, WORM (.31 TO .75 DIA)(1.166)	477402
8.	6.671	**PIPE**, GEAR OTLT	22514738
9.	6.674	**SEAL**, (7.65MM I.D.X 1.63MM)	7829923
10.	6.670	**HOSE**, GEAR INL	26010184
11.	8.962	**HOSE**, BULK (3/8 IDX10 FT)	7828506
12.	8.900	**BOLT**, HFH (M10X1.5X30, 9.8 PZOR)	11507023
13.	8.900	**BOLT**, HFH (3/8-16X1, 280M PZOR)	9439870

© 1990 GENERAL MOTORS SERVICE PARTS OPERATIONS—LIGHT TRUCK 52R

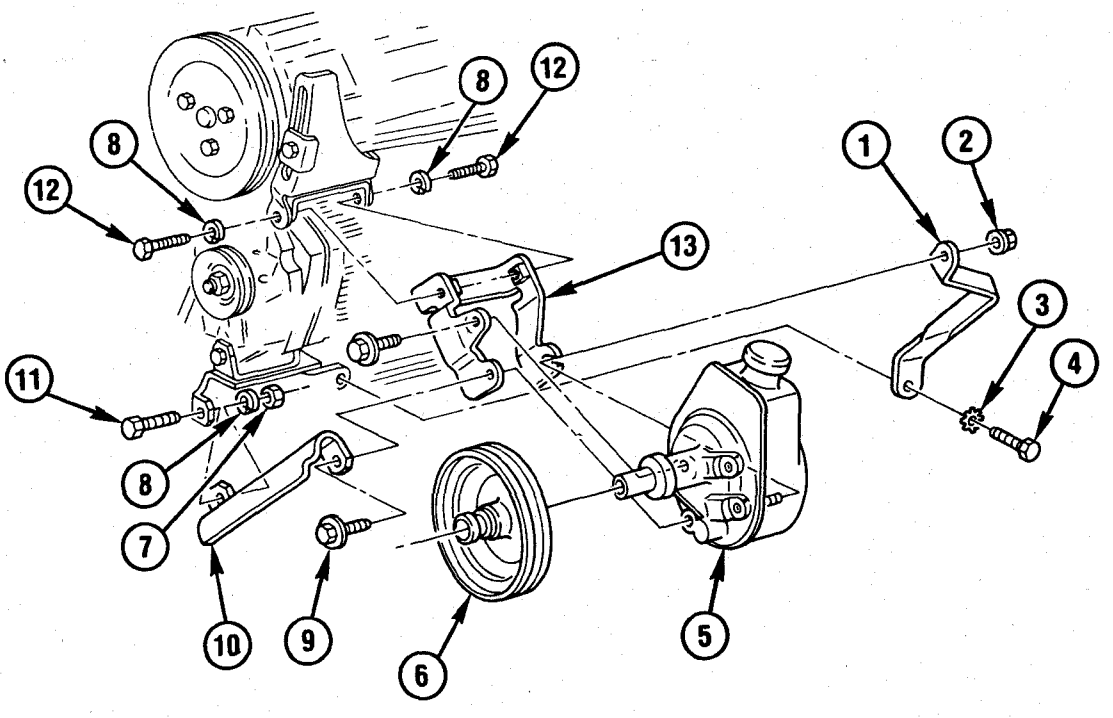

TR06-073

1985-1986 CK STEERING/BRAKE PUMP MOUNTING (L25/292T)
1987-1989 RV STEERING/BRAKE PUMP MOUNTING (L25/292T)

1.	6.606	**BRACE**, P.S. PUMP RR	14015414
2.	8.917	**NUT**, HFH (M10X1.5X10, POR, 10)	11506101
3.	8.932	**WASHER**, EXT TTH LK (7/16)	
4.	8.900	**BOLT**, HEX (3/8-16X1 1/8)	
5.	6.605	**PUMP**, P.B./P.S. (C/R MODELS)	7839801
	6.605	**PUMP**, P.B./P.S. (K/V MODELS)	7839813
6.	6.655	**PULLEY**, P.S. PUMP (EXC A.C.)	14023172
	6.655	**PULLEY**, P.B. BOOS & P.S. PUMP (W/A.C.)	14025192
7.	8.915	**NUT**, HEX (3/8X16X21/64, 301 ZN)	9414034
8.	8.931	**WASHER**, SPR LK (7/16X25/32X7/64, ZOR)	9439513
9.	8.900	**BOLT**, HEX (M10X1.5X20, 10.9 POR)	11504595
	8.931	**WASHER**, SPR LK (7/16 X 25/32 X 7/64, ZOR)	9439513
10.	6.606	**BRACE**, P.S. PUMP FRT	14015362
11.	8.900	**BOLT**, FLG HEX (3/8-16X1, 300M)	9424320
12.	8.900	**BOLT**, HEX (3/8-16X11/4)	
13.	6.606	**BRACKET**, P.S. PUMP	14015360

© 1990 GENERAL MOTORS SERVICE PARTS OPERATIONS—LIGHT TRUCK 52R

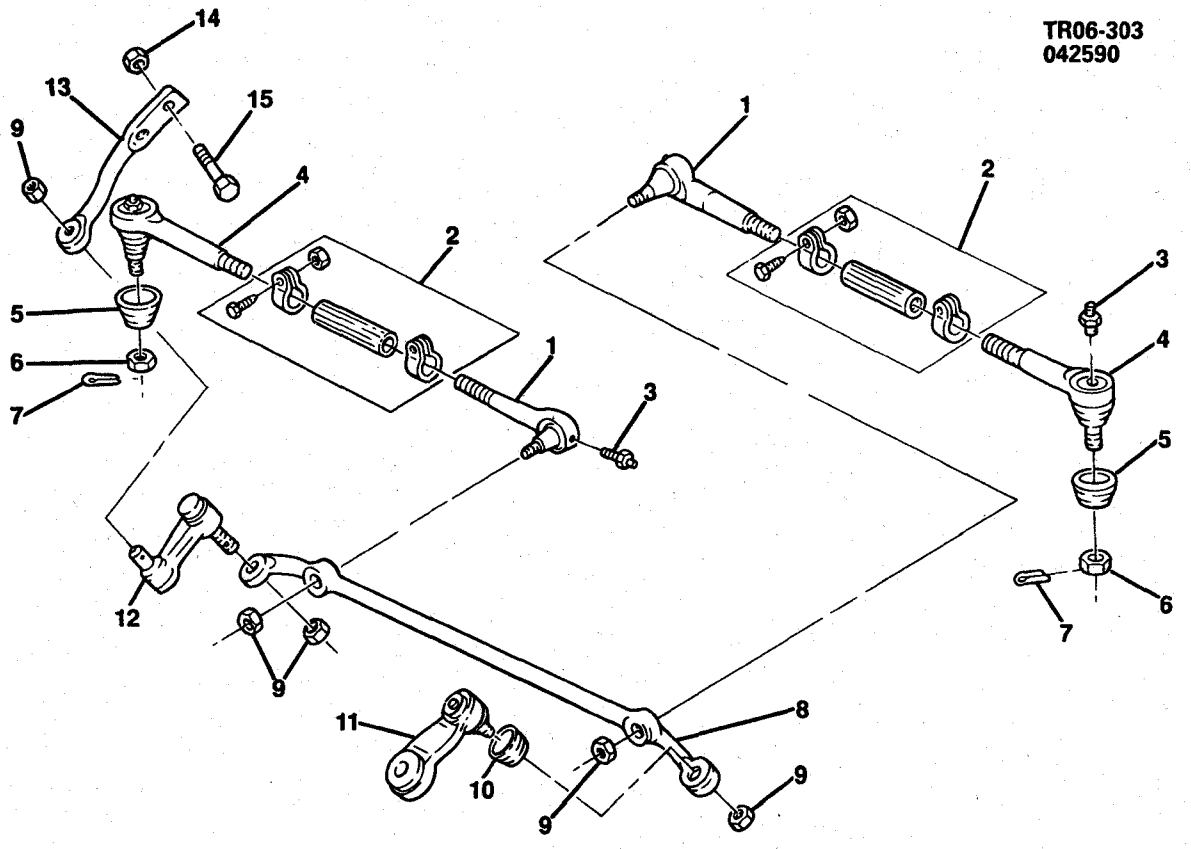

1985-1986 C STEERING LINKAGE
1987-1991 R STEERING LINKAGE

1.	6.230	**ROD**, INNER TIE(*1)	14002550
2.	6.232	**TUBE KIT**, ADJUSTER	7839709
3.	8.984	**FITTING**, TYPE C OR D STGHT (.25X28X.58 ZC)	9417901
4.	6.233	**ROD**, OUTER TIE	378343
5.	6.242	**SEAL**, TIE ROD SOC BALL STUD OTR	328144
6.	8.917	**NUT**, HEX SL (9/16-18 CAD OR ZC)	3983037
7.	8.938	**PIN**,COTTER (1/8X1 1/2)	
8.	6.870	**ROD KIT**, INTER	14067697
9.	8.915	**NUT**, HEX (.625-18 CB)(*2)	9424988
10.	6.886	**SEAL**, BALL STUD	3941724
11.	6.859	**ARM**, PITMAN (MANUAL)(*1)	14013039
	6.859	**ARM**, PITMAN (W/P.S.)(*1)	14013038
12.	6.895	**ARM KIT**, IDLER(*1)	14067696
13.	6.896	**SUPPORT**, STRG IDLER ARM	6260677
14.	8.917	**NUT**, HEX LK (3/8-16 301M CAD)	9422297
15.	8.900	**BOLT**, HEX (3/8-16X1.25 300M PS)	9440954

NOTE 1: ASSEMBLIES INCLUDE BALL, STUD, NUT.
NOTE 2: REFER TO LIGHT TRUCK SERVICE MANUAL FOR SPECIAL INSTRUCTIONSON BALL, STUD, NUT REPLACEMENT.

© 1990 GENERAL MOTORS SERVICE PARTS OPERATIONS—LIGHT TRUCK 52R

T6-72

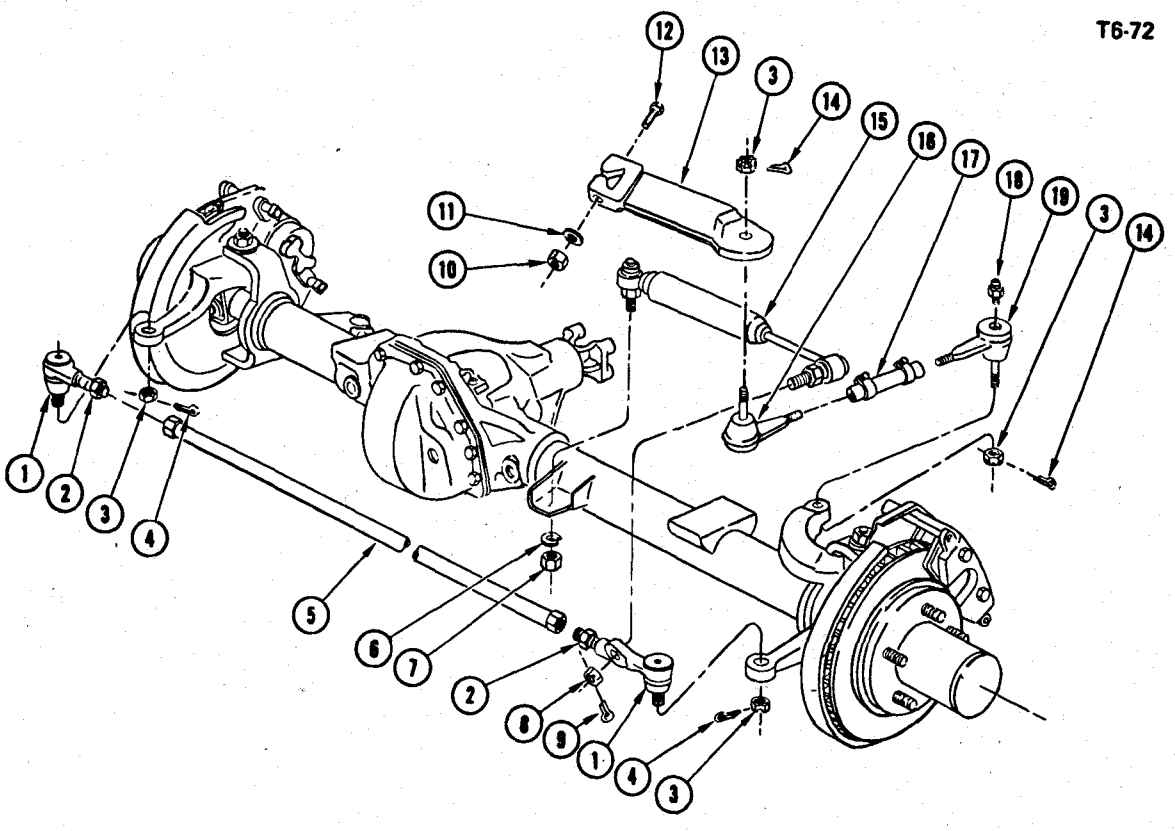

T6-72

1985-1986 K1,2 STEERING LINKAGE (EXC 4.10 RATIO W/JB7,JD7)
1987-1988 V1,2 STEERING LINKAGE (EXC 4.10 RATIO W/JB7,JD7)

1.	6.233	**SOCKET**, TIE ROD-RH (INCL SEAL & ITEM #2)	14026802
	6.233	**SOCKET**, TIE ROD-LH (INCL SEAL & ITEM #2)	14026803
	6.242	**SEAL**, TIE ROD SOC BALL STUD	6259074
2.	6.234	**NUT**, TIE ROD JAM-RH (7/8"-18 RH THD)	14026806
	6.234	**NUT**, TIE ROD JAM-LH (7/8"-18 LH THD)	14026805
3.	8.917	**NUT**, HEX SLOTTED (5/8"-18)(TIE ROD SOCKETS TO KNU)	
	6.870	**NUT**, HEX SLOTTED (5/8"-18)(CONN ROD SOCKETS TO PITMAN ARM & STRG ARM)(8.917)	14054921
4.	8.938	**PIN**, COTTER (M3.2X25)	
5.	6.230	**TUBE**, TIE ROD ADJ	14026804
6.	8.931	**WASHER**, LK (1/2")	
7.	8.915	**NUT**, PREV TORQ HEX LK (1/2"-20)	
8.	8.917	**NUT**, HEX SLOTTED (1/2"-20)	
9.	8.938	**PIN**, COTTER (3/32"X1")	
10.	8.917	**NUT**, PREV TORQ HEX LK (9/16"-18)	
11.	8.929	**WASHER** (9/16X1 1/8X1/16)	
12.	8.900	**BOLT** (9/16"-18X3 1/2")	
13.	6.859	**ARM**, PITMAN	14064660
14.	8.938	**PIN**, COTTER (1/8"X1 1/2")	
15.	6.865	**ABSORBER**, STRG RELAY & TIE ROD SHK	4993563
16.	6.874	**SOCKET**, STRG CONN ROD SHORT	362297
17.	6.870	**SLEEVE**, STRG CONN ROD	14007644
18.	8.984	**FITTING**, LUBE, STRAIGHT (1/4"-28X1/2")	
19.	6.874	**SOCKET**, STRG CONN ROD LONG	362298

© 1990 GENERAL MOTORS SERVICE PARTS OPERATIONS—LIGHT TRUCK 52R

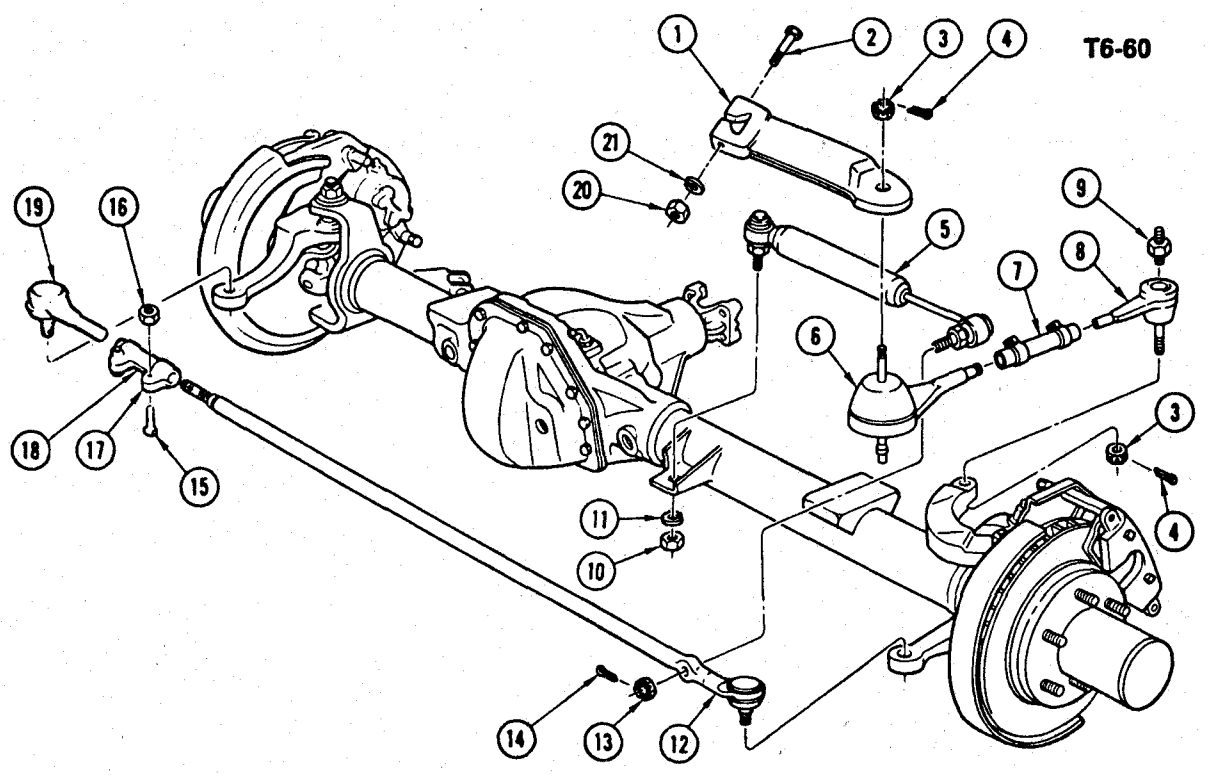

T6-60

1985-1986 K2,3 STEERING LINKAGE
1987-1991 V2,3 STEERING LINKAGE

1.	6.859	**ARM**, PITMAN	14064660
2.	8.900	**BOLT**, HEX (9/16-18X3 1/2, 300M)	9425344
3.	8.917	**NUT**, HEX SLOTTED (5/8-18, 286M PL)	14054921
4.	8.938	**PIN**, COTTER (1/8X1 1/2)	103376
5.	6.865	**ABSORBER**, SHK	4993563
6.	6.874	**SOCKET**, CONN ROD SHORT	362297
7.	6.870	**SLEEVE**, CONN ROD (1985-88)	14007644
	6.870	**SLEEVE**, CONN ROD (1989-91)	15617288
8.	6.874	**SOCKET**, CONN ROD LONG	362298
9.	8.984	**FITTING**, LUB (1/4-28X1/2)	9417901
10.	8.915	**NUT**, HEX (1/2-20, 301M ZC)	9417614
11.	8.931	**WASHER**, LK (1/2)	15531205
12.	6.233	**SOCKET**, TIE ROD-LH (K2/V2)	458479
	6.233	**SOCKET**, TIE ROD-LH (K3/V3)	462821
13.	8.917	**NUT**, SLOTTED HEX (1/2-20)	9431840
14.	8.938	**PIN**, COTTER (3/32X1 1/2)	103376
15.	N.S.	**BOLT**, (PART OF ITEM #18)	
16.	N.S.	**NUT**, (PART OF ITEM #18)	
17.	N.S.	**CLAMP**, (PART OF ITEM #18)	
18.	6.2 2	**SLEEVE**, TIE ROD ADJ (INCL #15-17)	458481
19.	6.233	**SOCKET**, TIE ROD-RH	458480
20.	8.917	**NUT**, PRVG TORQ LK (9/16-18)	9422304
21.	8.929	**WASHER** (9/16X1 1/8X1/16)	2441143

© 1990 GENERAL MOTORS SERVICE PARTS OPERATIONS—LIGHT TRUCK 52R

GROUP 7.000

ILLUSTRATION INDEX

TITLE		PAGE
1987-1991	R FRAME ASM	7-3
1985-1986	C FRAME	7-5
1985-1986	K FRAME	7-6
1987-1991	V FRAME	7-9
1987-1991	RV TRAILER HITCH/TOW HOOK	7-11
1985-1986	C3 STABILIZER SHAFT/REAR	7-12
1987-1991	R3 STABILIZER SHAFT/REAR	7-12
1987-1991	V3 STABILIZER SHAFT/REAR (W/5X2,5X3,5X4)	7-12
1985-1986	K SUSPENSION/FRONT	7-15
1987	V SUSPENSION/FRONT	7-15
1988-1991	V SUSPENSION/FRONT	7-17
1985-1986	C2(43) SUSPENSION/REAR	7-19
1985-1986	CK3 SUSPENSION/REAR (EXC AUXILIARY SPRINGS)	7-19
1987-1989	R2(43) SUSPENSION/REAR	7-19
1987-1991	RV3 SUSPENSION/REAR (EXC AUXILIARY SPRINGS)	7-19
1985-1986	C3 SUSPENSION/REAR (W/AUXILIARY SPRINGS)	7-21
1987-1991	R3 SUSPENSION/REAR (W/AUXILIARY SPRINGS)	7-21
1985-1986	CK1,2 SUSPENSION/REAR	7-23
1987-1991	RV1,2 SUSPENSION/REAR	7-23
1985-1986	K3 SUSPENSION/REAR (W/AUXILIARY SPRINGS)	7-25
1987-1991	V3 SUSPENSION/REAR (W/AUXILIARY SPRINGS)	7-25
1985-1986	CK(03-43) SPARE WHEEL CARRIER/FRAME MOUNTED (P10)/GLIDE-OUT (P11)	7-27
1987-1991	RV(03-43) SPARE WHEEL CARRIER/FRAME MOUNTED (P10)/GLIDE-OUT (P11)	7-27
1985-1986	CK(03-43) SPARE WHEEL CARRIER/SIDE MOUNTED (P13)	7-28
1987-1991	RV(03-43) SPARE WHEEL CARRIER/SIDE MOUNTED (P13)	7-28
1985-1986	CK(06-16) SPARE WHEEL CARRIER	7-29
1987-1991	RV(06-16) SPARE WHEEL CARRIER	7-29
1985-1986	CK BUMPER/FRONT	7-31
1987-1991	RV BUMPER/FRONT	7-31
1985-1986	CK(03-43) BUMPER/REAR STEP	7-33
1987-1991	RV(03-42) BUMPER/REAR STEP	7-33
1985-1986	CK(06-16) BUMPER/REAR	7-34
1987-1991	RV(06-16) BUMPER/REAR	7-34
1989-1991	RV(03-43) BUMPER/REAR	7-36

© 1990 GENERAL MOTORS SERVICE PARTS OPERATIONS—LIGHT TRUCK 52R

NOTES

BLANK PAGE

TR07-009
042590

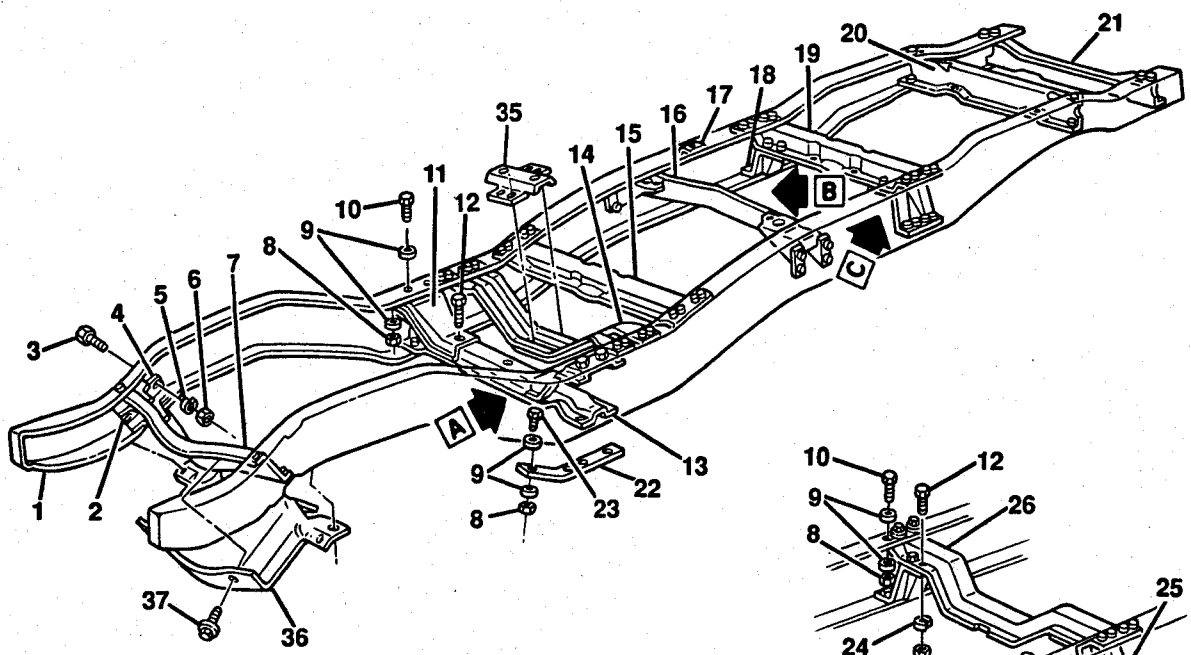

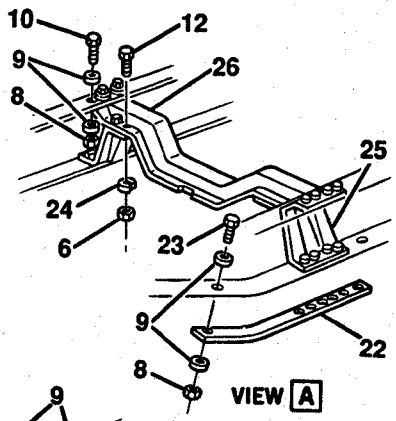

VIEW A
R2 (43) R3 (W/M 20)
1987-89

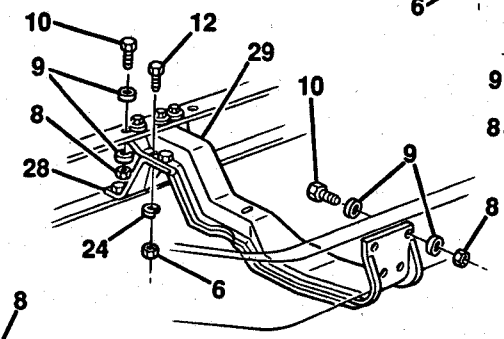

VIEW A
R1-2 (03-06) (W/M 20) 1987
R2 (06) (W/M 20) 1988-90

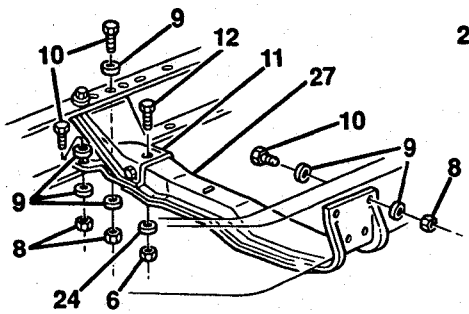

VIEW A
R1-2(03-06) (W/MD8) 1987
R1 (06) (W/MD8) 1988-91

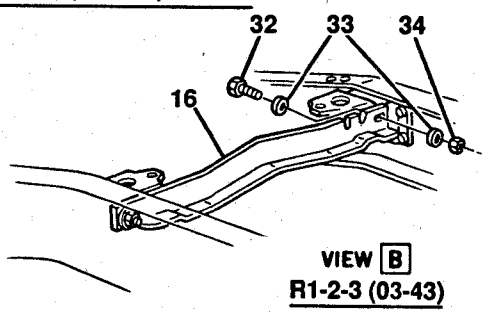

VIEW B
R1-2-3 (03-43)

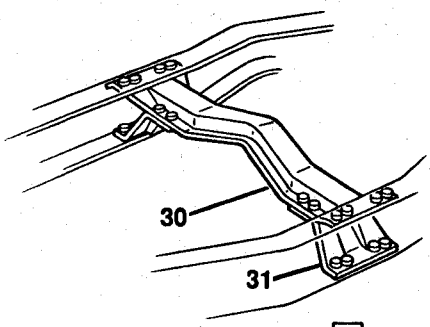

VIEW C
R1-2 (06)

TR07-009

© 1990 GENERAL MOTORS SERVICE PARTS OPERATIONS—LIGHT TRUCK 52R

1987-1991 R FRAME ASM

1.	7.006	**MEMBER**, SI (SEE CATALOG)	
2.	7.039	**REINFORCEMENT**, FRT C/MBR FRT (R310,314 RH)(1987-89)	14041240
3.	8.900	**BOLT**, HEX (3/8-16X1.12, 280M PEOR)	9440310
4.	7.039	**REINFORCEMENT**, FRT C/MBR RR (R310,314 RH)(1987-89)	14041248
5.	8.931	**WASHER**, SPR LK (7/16X25/32X7/64, ZOR)	9439513
6.	8.915	**NUT**, HEX (3/8X16X21/64, 301 ZN)	9414034
7.	7.010	**MEMBER**, FRT CR	15610526
8.	8.915	**NUT**, HEX (7/16-14, 301M)	9424985
9.	8.929	**WASHER**, FL (15/32X7/8X3/32)	3990160
10.	8.900	**BOLT**, HEX (7/16-14X1 1/8, 300M PS)	9441504
11.	4.081	**BRACE**, TRANS SUPT (SEE CATALOG)	
12.	8.900	**BOLT**, HEX (3/8-16X1.00, 300M)	9424320
13.	4.081	**SUPPORT**, TRANS (SEE CATALOG)	
14.	7.012	**MEMBER**, PROP SHF BRG SUPT CR (R1,2 06)(W/2 PIECE PROP)	14029159
	7.012	**MEMBER**, PROP SHF CR (R2 06)(7.4N)(1990-91)	15610651
15.	7.012	**MEMBER**, PROP SHF BRG SUPT CR (SEE CATALOG)	
16.	3.162	**SUPPORT**, AUX FUEL PIPE (R1,2,3)(03-43)(1987-89)(*1)	15588505
	3.162	**SUPPORT**, FUEL RR PIPE (R3 43)(1990-91)	15641300
17.	7.006	**REINFORCEMENT**, S/MBR (FLEETSIDE W/CAMPER SPL)	14041298
18.	7.039	**BRACE**, RR SPR C/MBR (R1,2 03,06)	14041285
	7.039	**BRACE**, RR SPR C/MBR (R2 43)(R3)	14041286
19.	7.012	**MEMBER**, RR SPR CR (SEE CATALOG)	15538347
20.	7.014	**MEMBER**, F/TNK CR (R1,2 06)	14067782
21.	7.014	**MEMBER**, RR CROSS (03,43)	14024585
	7.014	**MEMBER**, RR CR (R1,2 06)(EXC 40 GAL TANK)	14067782
	7.014	**MEMBER**, RR CR (R1,2 06)(W/40 GAL TANK)	14024579
22.	7.006	**REINFORCEMENT**, S/MBR-LH (292T,350M,454W)(W/ZW9)	14009327
	7.006	**REINFORCEMENT**, S/MBR-LH (5.7K,7.4N,6.2J)(W/ZW9)	15641235
	7.006	**REINFORCEMENT**, S/MBR-RH (292T,350M,454W)(W/ZW9)	14009328
	7.006	**REINFORCEMENT**, S/MBR-RH (5.7K,7.4N,6.2J)(W/ZW9)	15641236
23.	8.900	**BOLT**, HEX (7/16-14X1 12, 300M)	
24.	8.931	**WASHER**, SPR LK (3/8X11/16, ZOR)	9439512
25.	7.039	**BRACE**, TRANS SUPT (R2 43)(R3)(W/M20)(1987-89)	355475
26.	4.081	**SUPPORT**, TRANS (R2 43)(R3)(W/M20)(1987-89)	
27.	4.081	**SUPPORT**, TRANS (SEE CATALOG)	
28.	7.039	**BRACE**, TRANS SUPT (R1,2 03,06)(W/M20)	355471
29.	4.081	**SUPPORT**, TRANS (5.7K)(W/M20)	
30.	7.012	**MEMBER**, RR SPR CR (R1,2 06)	15629471
31.	7.039	**BRACE**, RR SPR C/MBR (R1,2 06)	14041285
32.	8.900	**BOLT**, HEX (5/16-18X7/8)	
33.	8.929	**WASHER**, FL (.344X.688X.065)	
34.	8.917	**NUT**, PREV TORQ HEX (5/16-18)	
35.	5.598	**HANGER**, PROP SHF (R1,2 06)	14007698
36.	0.029	**SHIELD**, ENG COMPT LWR NOISE (R3)(W/6.2)(1988-91)	15565031
37.	8.977	**BOLT**, HEX W/FL WA,TAP(M8X1.25X20,6202M)	11513894

NOTE 1: SUPPORT IS USED WHEN NO CROSSMEMBER EXISTS AT CAB REAR MOUNTING LOCATION.

RPO DEFINITIONS
M20 - TRANSMISSION, MAN 4 SPD, 117MM, 6.55 1ST
ZW9 - BODY EQUIPMENT, BASE BODY OR CHASSIS

© 1990 GENERAL MOTORS SERVICE PARTS OPERATIONS—LIGHT TRUCK 52R

TC07-004
090586

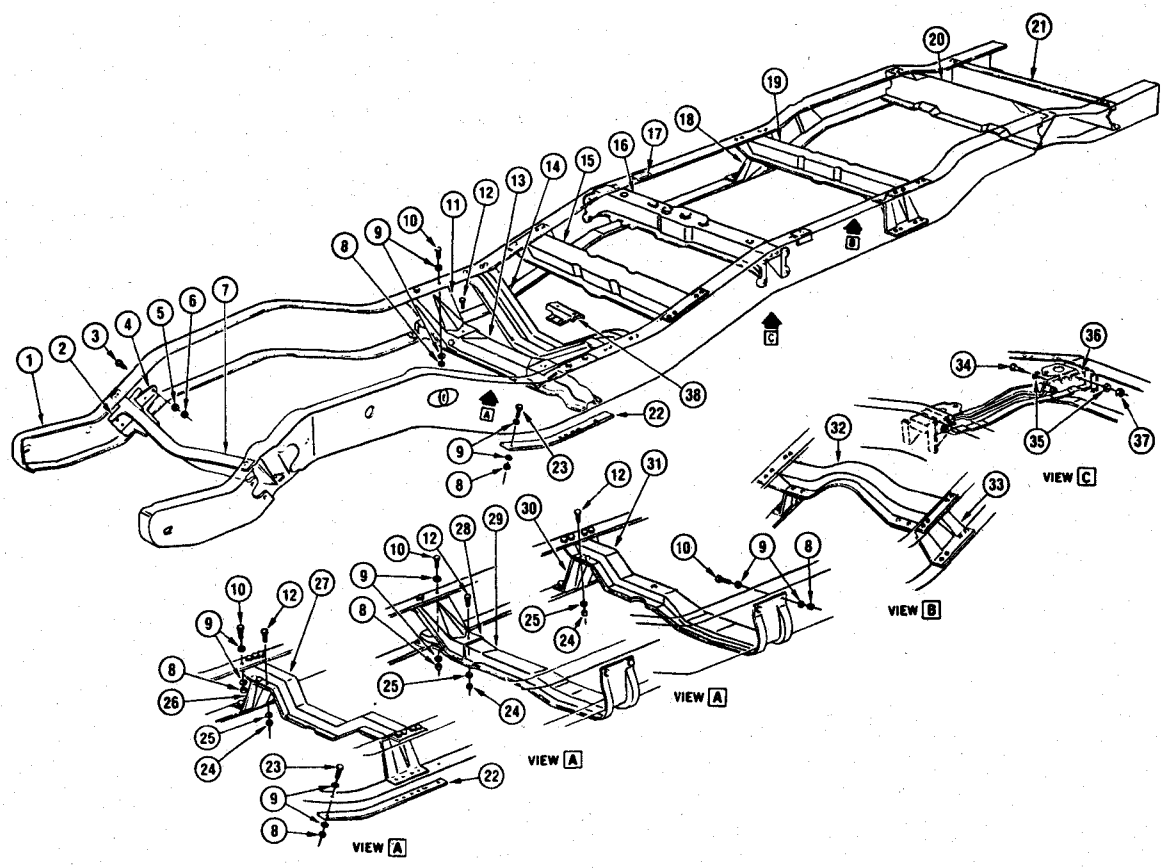

TC07-004

© 1990 GENERAL MOTORS SERVICE PARTS OPERATIONS—LIGHT TRUCK 52R

1985-1986 C FRAME

1.	7.006	**MEMBER**, SI	
2.	7.039	**REINFORCEMENT**, FRT C/MBR FRT (C310,314 RH ONLY)	14041240
3.	8.900	**BOLT**, HEX (3/8"-16X1 1/8")(300M)	
4.	7.039	**REINFORCEMENT**, FRT C/MBR RR (C310,314 RH ONLY)	14041248
5.	8.931	**WASHER**, SPR LK (3/8")	
6.	8.915	**NUT**, HEX (3/8X16X21/64, 301 ZN)	
7.	7.010	**MEMBER**, FRT CR (EXC ENG OIL COOLER)	15610526
	7.010	**MEMBER**, FRT CR (W/ENG OIL COOLER)	15610526
8.	8.915	**NUT**, HEX (7/16"-14)(301M)	
9.	8.929	**WASHER**, FL (15/32"IDX7/8"ODX3/32"THK)	
10.	8.900	**BOLT**, HEX (7/16"-14X1 1/8")(300M)	
11.	4.081	**BRACE**, TRANS SUPT (C20-43,C30 W/M40)	14032902
12.	8.900	**BOLT**, HEX (3/8"-16X1")(300M)	
13.	4.081	**SUPPORT**, TRANS (C20-43,C30 W/M40)	15549275
14.	7.012	**MEMBER**, PROP SHF BRG SUPT CR (C10,20-06 W/2 PIECE PROP)	14029159
15.	7.012	**MEMBER**, PROP SHF BRG SUPT CR (C20,30-43)	378326
16.	7.012	**MEMBER**, PROP SHF CR (C10,20-03 W/2 PIECE PROP)	15588517
17.	7.006	**REINFORCEMENT**, S/MBR (FLEETSIDE W/CAMPER SPL)	14041298
18.	7.039	**BRACE**, RR SPR C/MBR (C10,20-03 & 06)	14041285
	7.039	**BRACE**, RR SPR C/MBR (C20-43,C30)	14041286
19.	7.012	**MEMBER**, RR SPR CR (C10,20-03 W/4.3,6.2,305,350L)	15538347
	7.012	**MEMBER**, PROP SHF CR (C20,30-03 W/6.2J,292,350M,454)	15538347
20.	7.014	**MEMBER**, F/TNK CR (C10,20-06)	14067782
21.	7.014	**MEMBER**, RR CROSS (C10,20,30-03)	14024585
	7.014	**MEMBER**, RR CR (C10,20-06 EXC 40 GAL TANK)	14067782
	7.014	**MEMBER**, RR CR (C10,20-06 W/40 GAL TANK)	14024579
22.	7.006	**REINFORCEMENT**, S/MBR-LH (C30 CHASSIS CABS)	14009327
	7.006	**REINFORCEMENT**, S/MBR-RH (C30 CHASSIS CABS)	14009328
23.	8.900	**BOLT**, HEX (7/16"-14X1 12")(300M)	
24.	8.915	**NUT**, HEX (3/8X16X21/64, 301 ZN)	
25.	8.931	**WASHER**, SPR LK (3/8")	
26.	7.039	**BRACE**, TRANS SUPT (C20-43,C30 W/M20)	355475
27.	4.081	**SUPPORT**, TRANS (C20-43,C30 W/M20)	14045679
28.	4.081	**BRACE**, TRANS SUPT (C10,20-30 & 06 EXC M20)	14032902
29.	4.081	**SUPPORT**, TRANS (C10,20-03 & 06 W/305,350L & MD8)	14045675
	4.081	**SUPPORT**, TRANS (C10,20-03 & 06 W305H,350M,454 EXC MD8,M20)	15588512
	4.081	**SUPPORT**, TRANS (C10-03 W/4.3 & M40)	15588515
	4.081	**SUPPORT**, TRANS (C10,20-03 & 06 W/4.3N,6.2C & MD8)	15593991
	4.081	**SUPPORT**, TRANS (C10,20-03 & 06 W/4.3N,6.2 EXC MD8,M20)	15593994
30.	7.039	**BRACE**, TRANS SUPT (C10,20-03 & 06 W/M20)	355471
31.	4.081	**SUPPORT**, TRANS (C10,20-03 & 06 W/292,305,350M,454 & M20)	15588516
	4.081	**SUPPORT**, TRANS (C10,20-03 W/4.3,6.2 & M20)	15593996
32.	7.012	**MEMBER**, RR SPR CR (C10,20-06)	15538365
33.	7.039	**BRACE**, RR SPR C/MBR (C10,20-06)	14041285
34.	8.900	**BOLT**, HEX (5/16"-18X7/8")	
35.	8.929	**WASHER**, FL (11/32"IDX11/16"ODX1/16"THK)	
36.	3.162	**SUPPORT**, AUX FUEL PIPE(*1)	15588505
37.	8.917	**NUT**, PREV TORQ HEX LK (5/16"-18)	
38.	5.598	**HANGER**, PROP SHF (C2-06)	14007698

NOTE 1: SUPPORT IS USED WHEN NO CROSSMEMBER EXISTS AT CAB REAR MOUNTING LOCATION.

RPO DEFINITIONS
MD8 - TRANSMISSION, AUTO 4 SPD, THM 700 R4
M20 - TRANSMISSION, MAN 4 SPD, 117MM, 6.55 1ST
M40 - TRANSMISSION, AUTO 3 SPD, 76MM, 2.85 RATIO

© 1990 GENERAL MOTORS SERVICE PARTS OPERATIONS—LIGHT TRUCK 52R

TK07-005
062485

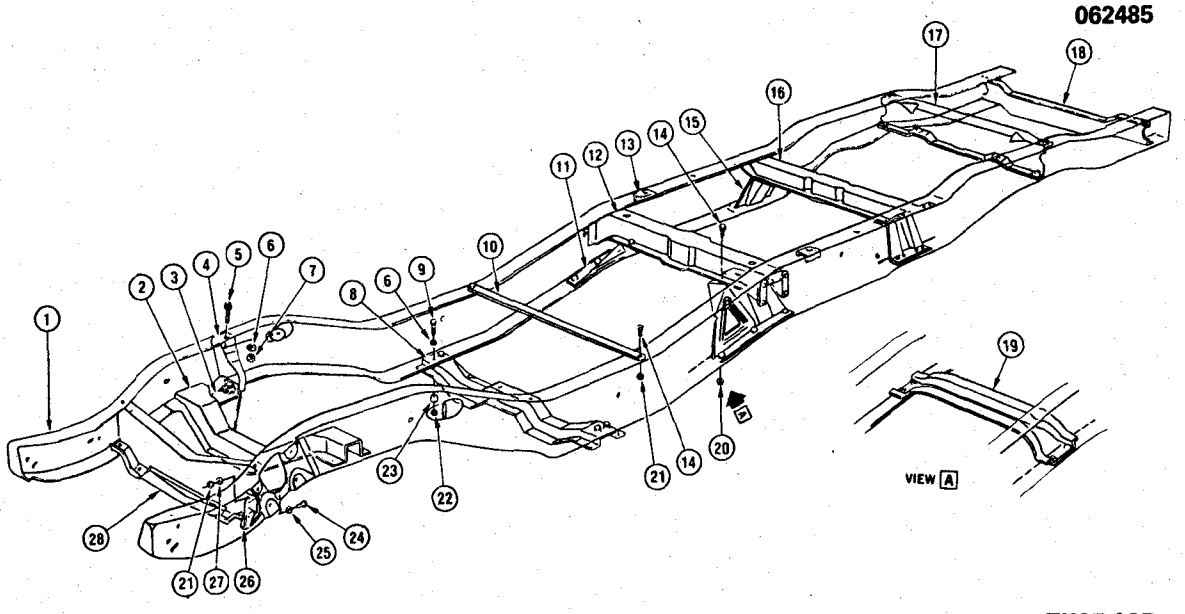

TK07-005

1985-1986 K FRAME

1.	7.006	**MEMBER**, SI	
2.	0.029	**SUPPORT**, ENG FRT (EXC 292)	14072695
	0.029	**SUPPORT**, ENG FRT (W/292)	14041273
3.	0.029	**REINFORCEMENT**, ENG FRT SUPT (EXC 292)(USED ON RH ONLY)	14072690
4.	7.006	**REINFORCEMENT**, ENG FRT SUPT-LH (W/4.3N)	15598061
	7.006	**REINFORCEMENT**, ENG FRT SUPT-RH	15598062
5.	8.900	**BOLT**, HEX FLG HD (7/16"-14X1 1/8")(300M)	
6.	8.929	**WASHER**, FL (15/32"IDX7/8"ODX3/32"THK)	
7.	8.917	**NUT**, PREV TORQ HEX LK (7/16"-14)(301M)	
8.	4.081	**SUPPORT**, TRANS	15538276
9.	4.085	**BOLT**, TRANS SUPT (6.605)	343178
10.	7.039	**BRACE**, SI MBR (K109209-06 W/6.2)	14064614
11.	7.039	**BRACE**, C/MBR-LH (K1,2)	15593977
	7.039	**BRACE**, C/MBR-LH (K3)	15593979
	7.039	**BRACE**, C/MBR-RH (K1,2)	15593978
	7.039	**BRACKET**, C/MBR-RH (K3)	15538381
12.	7.012	**MEMBER**, CR (EXC K30943)	15593955
	3.162	**SUPPORT**, FUEL RR PIPE (K30943)	15588505
13.	7.006	**REINFORCEMENT**, S/MBR (FLEETSIDE W/CAMPER SPL ONLY)	14041298
14.	8.900	**BOLT**, HEX (3/8"-16X1")(300M)	
15.	7.039	**BRACE**, C/MBR-LH & RH (K314)	6271340
	7.039	**BRACE**, C/MBR-LH & RH (K10906,20906)	14041285
	7.039	**BRACE**, C/MBR-LH (K10903,K20903)	343191
	7.039	**BRACE**, C/MBR-RH (K10903,K20903)	467002
	7.039	**BRACE**, C/MBR-LH & RH (K10516,K300)	14041286
16.	7.012	**MEMBER**, RR SPR CR (K10516)	14024577
	7.012	**MEMBER**, RR SPR CR (K10003)(K20003 W/6.2C,350L)	14061356
	7.012	**MEMBER**, RR SPR CR (K20003 W/6.2J,350M,292)	15538348
	7.012	**MEMBER**, RR SPR CR (K10006 W/6.2)(K20006,K300)	15538347
17.	7.014	**MEMBER**, F/TNK CR	14067782
18.	7.014	**MEMBER**, RR CR (K1,2,3-03 MODELS)	14024585
	7.014	**MEMBER**, RR CR (K10906)	14024579
	7.014	**MEMBER**, RR CR (K10516)	14067782
19.	7.012	**MEMBER**, PROP SHF BRG SUPT CR (4.081)(K30943)	14014791
20.	8.917	**NUT**, PREV TORQ HEX LK (3/8"-16)(301M)	
21.	8.915	**NUT**, HEX (3/8X16X21/64, 301 ZN)	
22.	8.915	**NUT**, HEX (7/16"-14)(301M)	
23.	4.081	**SPACER**, TRANS SUPT (6.509)	343179
24.	8.900	**BOLT**, HEX (3/8"-16X1 1/8")	
25.	8.929	**WASHER**, FL (3/8"IDX3/4"ODX1/16"THK)	
26.	7.039	**REINFORCEMENT**, FRT C/MBR (LH ONLY)	14024593
27.	8.931	**WASHER**, SPR LK (3/8")	
28.	7.010	**MEMBER**, FRT CROSS	15610525

© 1990 GENERAL MOTORS SERVICE PARTS OPERATIONS—LIGHT TRUCK 52R

NOTES

BLANK PAGE

TA07-021
101288

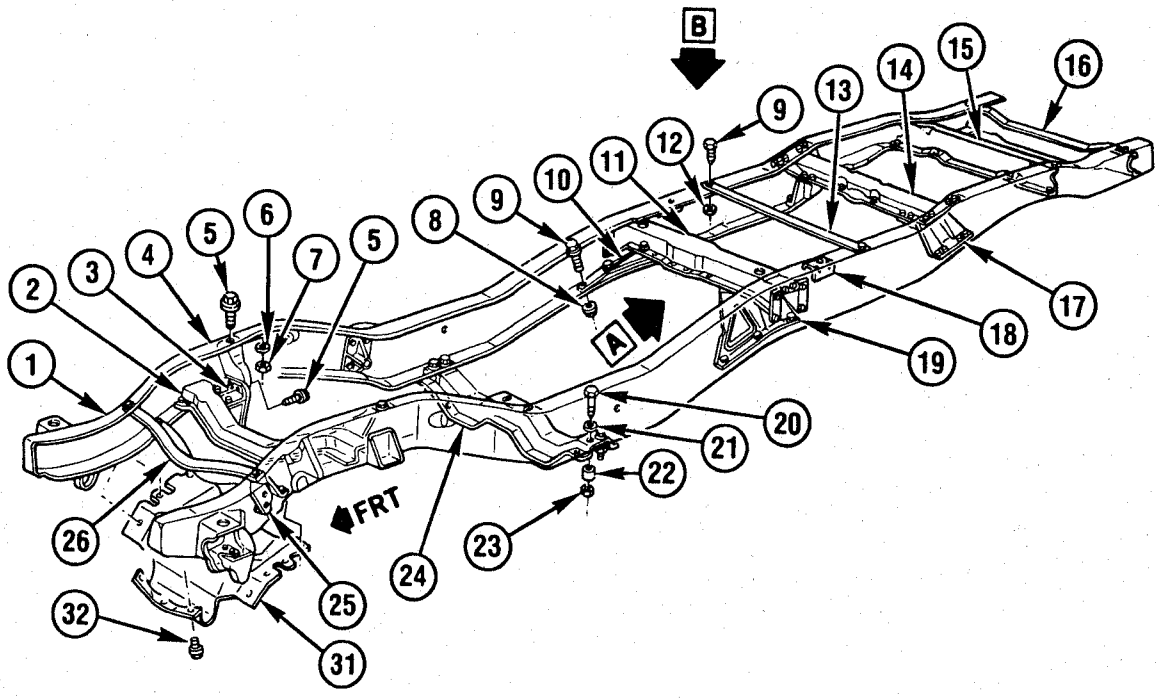

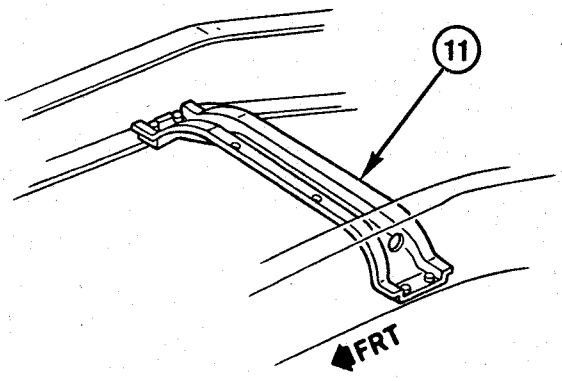

VIEW A
V3 (43)

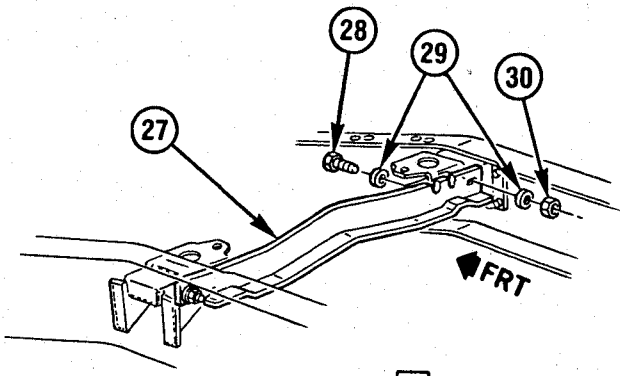

VIEW B

TA07-021

1987-1991 V FRAME

1.	7.006	**MEMBER**, SI (SEE CATALOG)	
2.	0.029	**SUPPORT**, ENG FRT (W/292T)(1987-89)	14041273
	0.029	**SUPPORT**, ENG FRT (W/454W)(1987-89)	15549324
	0.029	**SUPPORT**, ENG FRT (EXC 292T/454W)	14072695
3.	0.029	**REINFORCEMENT**, ENG FRT SUPT	14072690
4.	7.006	**REINFORCEMENT**, ENG FRT SUPT-LH (V1-03 W/4.3Z)(1987)	15598061
	7.006	**REINFORCEMENT**, ENG FRT SUPT-RH (V1-03 W/4.3Z)(1987)	15598062
5.	8.900	**BOLT**, HFH (7/16-14X1.125, 300M PEOR)	9440344
6.	8.929	**WASHER**, FL (15/32X7/8X3/32)	3990160
7.	8.917	**NUT**, HEX LK (7/16-14, 301M CAD)	9422299
8.	8.917	**NUT**, HEX LK (3/8-16, 301M CAD)	9422297
9.	8.900	**BOLT**, FLG HEX (3/8-16X1, 300M)	9424320
10.	7.039	**BRACE**, PROP SHF C/MBR-RH (V1,2 03)(W/AUX TK NL2)(1987)	15593978
	7.039	**BRACE**, PROP SHF C/MBR-RH (43)(W/AUX TK NL2)(1987-89)	
	7.039	**BRACE**, PROP SHF C/MBR-RH (V3 03)(1987-89)	6271340
11.	7.012	**MEMBER**, PROP SHF CR (V1,2,3-03)(V310)(1987-89)	15593955
	7.012	**MEMBER**, PROP SHF CR (V3-43)(1987-91)	14014791
12.	8.915	**NUT**, HEX (3/8X16X21/64, 301 ZN)	9414034
13.	7.039	**BRACE**, SI MBR (V1,2-06 W/6.2C,J)	14064614
14.	7.012	**MEMBER**, RR SPR CR (SEE CATALOG)	
15.	7.014	**MEMBER**, F/TNK CR (06,16)	14067782
16.	7.014	**MEMBER**, RR CR (03,43)	14024585
	7.014	**MEMBER**, RR CR (V1,2-06 W/40 GAL TK NE2)	14024579
	7.014	**MEMBER**, RR CR (V1,2-06 EXC 40 GAL TK NE2)(V1-16)	14067782
17.	7.039	**BRACE**, RR SPR C/MBR (SEE CATALOG)	14041286
18.	7.006	**REINFORCEMENT**, S/MBR (V2)(V309 W/E63 & Z81)	14041298
19.	7.039	**BRACE**, PROP SHF C/MBR-LH (V1,2-03 W/292T,6.2C,J)(1987)	15593977
	7.039	**BRACE**, PROP SHF C/MBR-LH (V310 W/5.7K,7.4N)(1987-89)	15549115
	7.039	**BRACE**, PROP SHF C/MBR-LH (V310 W/292T,350M,454W,6.2J)	15593979
	7.039	**BRACE**, PROP SHF C/MBR-LH (V314)(1987-89)	6271340
20.	4.085	**BOLT**, TRANS SUPT	343178
21.	8.929	**WASHER**, FL (15/32X7/8X3/32)	3990160
22.	4.081	**SPACER**, TRANS SUPT	343179
23.	8.915	**NUT**, HEX (7/16-14)	9424985
24.	4.081	**SUPPORT**, TRANS (W/292T,350M,454W)(1987-89)	15538276
	4.081	**SUPPORT**, TRANS (W/5.7K,7.4N,6.2C,J)	15548905
25.	7.039	**REINFORCEMENT**, FRT C/MBR-LH	14024593
26.	7.010	**MEMBER**, FRT CR	15610525
27.	3.162	**SUPPORT**, AUX FUEL PIPE (1987-89)	15588505
	3.162	**SUPPORT**, FUEL RR PIPE (1990-91)	15641300
28.	8.900	**BOLT**, HEX (5/16-18X7/8, 300M)	9425117
29.	8.929	**WASHER**, FL (.344X.688X.065)	120393
30.	8.917	**NUT**, PREV TORQ HEX (5/16-18)	9422295
31.	0.029	**SHIELD**, ENG COMPT LWR NOISE	15571405
32.	8.977	**BOLT**, HEX W/FL WA (M8X1.25X20,6202M)	11513894

RPO DEFINITIONS
E63 - BODY EQUIPMENT, FLEETSIDE PUBX
Z81 - CAMPER SPECIAL

© 1990 GENERAL MOTORS SERVICE PARTS OPERATIONS—LIGHT TRUCK 52R

TA07-006
042789

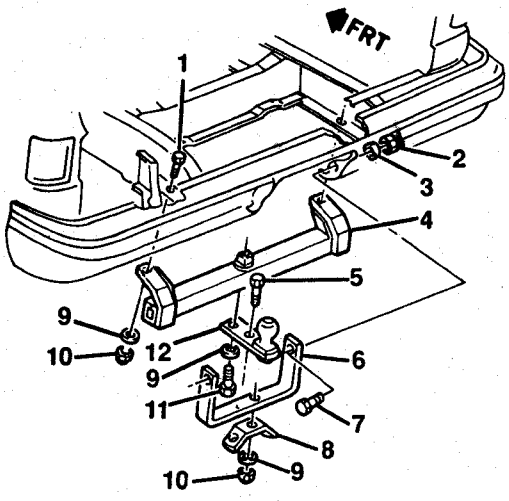

RV(06)W/VR2

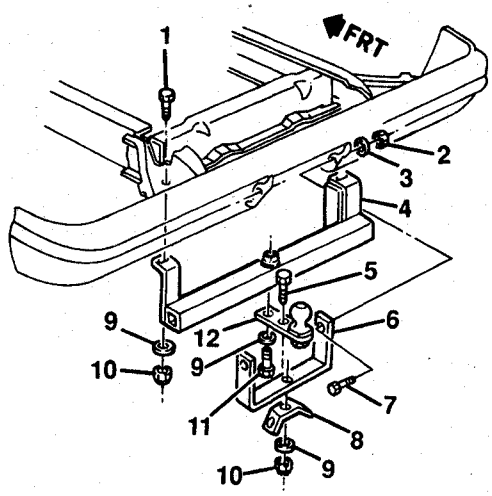

V(16)W/VR2

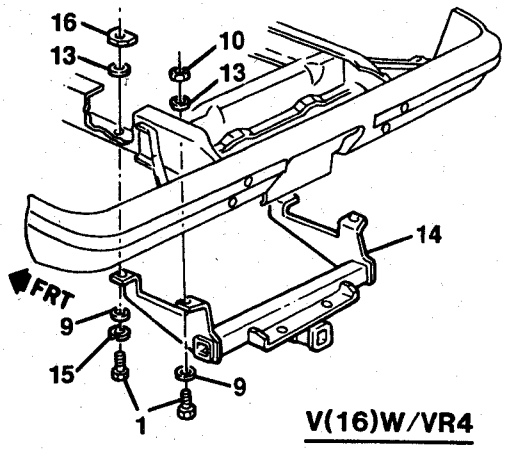

V(16)W/VR4

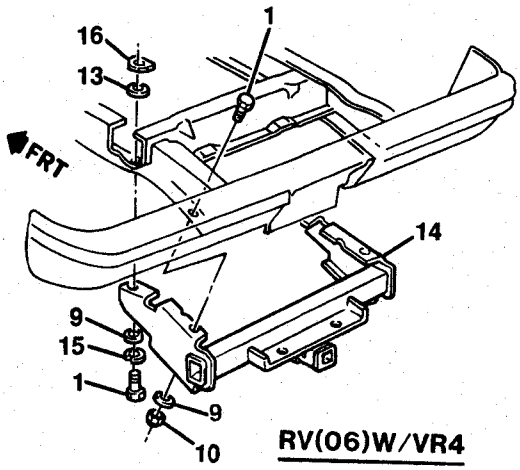

RV(06)W/VR4

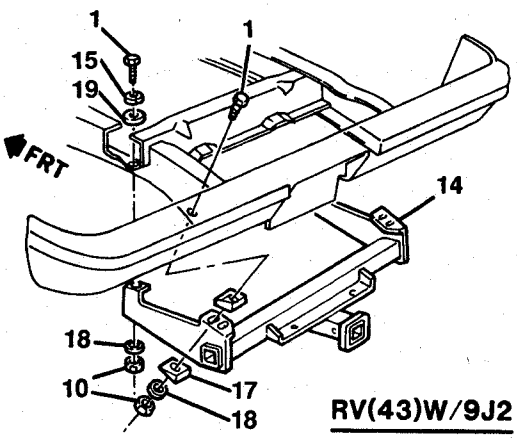

RV(43)W/9J2

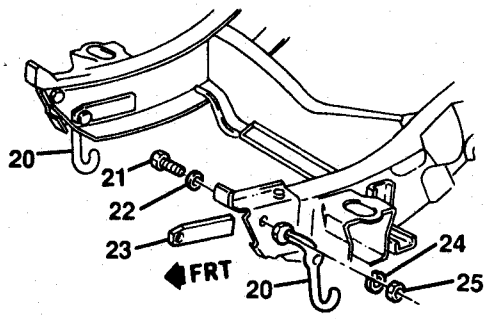

RV W/V76

TA07-006

© 1990 GENERAL MOTORS SERVICE PARTS OPERATIONS—LIGHT TRUCK 52R

1987-1991 RV TRAILER HITCH/TOW HOOK

NOTE: V76 - HOOK/TOW
NOTE: VR2 - TRAILER HITCH/FACTORY INSTALLED.
NOTE: VR4 - TRAILER HITCH/WEIGHT DISTRIBUTING PLATFORM.
NOTE: 9J2 - TRAILERING SPECIAL/REESE TYPE HITCH.

1.	8.900	**BOLT**, SPL (50-13X1.500, 300M)	9422332
	7.068	**PLATE**, TRLR WT DISTR HITCH PLTF STUD (W/VR4)(1990-91)	15648959
2.	8.915	**NUT**, HEX (3/8X16X21/64, 301 ZN)	9414034
3.	8.929	**WASHER**, FLAT (3/4X3/8)	331247
4.	7.068	**BRACKET**, TRLR HITCH DRAW BAR (V16 & VR2)	14072677
	7.068	**BRACKET**, TRLR HITCH DRAW BAR (RV-06 & VR2)	14072676
5.	8.900	**BOLT**, HEX (1/2-13X2)	
6.	7.068	**SUPPORT**, TRLR HITCH (VR2)	468493
7.	7.068	**BOLT**, TRLR HITCH SUPT (3/8-16X1.75)	351949
8.	N.S.	**BRACKET**, TRLR HITCH CHAIN (MAKE LOC)	
9.	8.931	**WASHER**, FLAT (1/2 STL)	1914842
10.	8.917	**NUT**, HEX LK (1/2-13, 301M CAD)	9422301
11.	8.900	**BOLT**, HEX (1/2-13X3 1/2, 300M ZC)	455005
12.	21.260	**HITCH PKG**, TRAILER TOW (EXC E62)(1987-90)	996922
	7.068	**BAR**, TRLR HITCH DRAW (RV1,2)(06)(W/VR2)	14029220
	7.068	**BAR**, TRLR HITCH DRAW (V16 & VR2)	468487
13.	8.929	**WASHER**, FL (.531X1.250)	3983589
14.	7.068	**PLATFORM**, TRLR WT DISTR HITCH (RV06 W/VR4)	14072675
	7.068	**PLATFORM**, TRLR WT DISTR HITCH (V16 W/VR4)(1987-89)	15522383
	7.068	**PLATFORM**, TRLR WT DISTR HITCH (V16 W/VR4)(1990-91)	15648960
	7.068	**PLATFORM**, TRLR WT DISTR HITCH (W/9J2)	14072673
15.	8.931	**WASHER**, SPR LK (.50X.87, ZOR)	9439514
16.	16.335	**PLATE**, TAPPED (1/2-13)	6274588
17.	7.068	**PLATE**, TRLR DISTR DISTR HITCH FWDG (W/9J2)	6260695
18.	8.929	**WASHER**, FLAT (1/2X1X1/16,ZC)	2436165
19.	5.556	**WASHER**, FLAT	7814115
20.	7.068	**HOOK**, FRT TOW-LH	14072663
	7.068	**HOOK**, FRT TOW-RH	14072664
21.	8.900	**BOLT**, HEX (1/2-13X2 1/2)	455002
22.	8.929	**WASHER**, PLAIN (9/16X3/8, ZC)	120390
23.	7.068	**REINFORCEMENT**, FRT TOW HOOK FRM (R)(1987-89)	14045519
	7.068	**REINFORCEMENT**, FRT TOW HOOK FRM (V)(1987-91)	14045501
24.	8.931	**WASHER**, SPR LK (1/2X7/8)	9439514
25.	8.915	**NUT**, HEX (1/2-13)	9414511

© 1990 GENERAL MOTORS SERVICE PARTS OPERATIONS—LIGHT TRUCK 52R

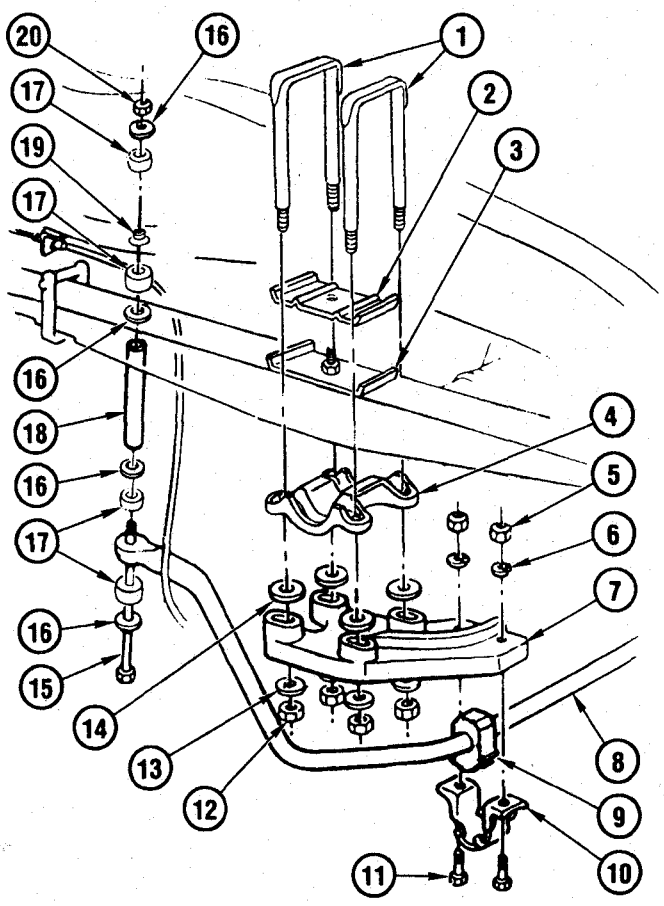

TC07-001

1985-1986 C3 STABILIZER SHAFT/REAR
1987-1991 R3 STABILIZER SHAFT/REAR
1987-1991 V3 STABILIZER SHAFT/REAR (W/5X2,5X3,5X4)

NOTE: 5X2 - AXLE REAR, WIDE TRACK DUAL 3.73:1 RATIO
NOTE: 5X3 - AXLE REAR, WIDE TRACK DUAL 4.10:1 RATIO
NOTE: 5X4 - AXLE REAR, WIDE TRACK DUAL 4.56:1 RATIO

1.	7.516	**BOLT**, RR SPR U (12X2 1/2X5/8-18)(310,314)(1985-87)	471662
	7.516	**BOLT**, RR SPR U (10 1/2X2 1/2X5/8-18)(309 EXC AUX SPR)	471666
	7.516	**BOLT**, RR SPR U (12 1/2X2 1/2X5/8-18)(309 W/AUX SPR)	474977
2.	7.518	**SPACER**, RR SPR U-BOLT (SEE CATALOG)	
3.	7.518	**SPACER**, RR SPR U BOLT (SEE CATALOG)	
4.	7.518	**PLATE**, RR SPR U BOLT ANC (SEE CATALOG)	
5.	8.915	**NUT**, HEX (3/8X16X21/64, 301 ZN)	9414034
6.	8.931	**WASHER**, SPR LK (3/8")	
7.	7.242	**ANCHOR**, RR STAB SHF-LH	14033574
	7.242	**ANCHOR**, RR STAB SHF-RH	14033573
8.	7.241	**SHAFT**, RR STAB	328107
9.	7.243	**BUSHING**, RR STAB SHF	404062
10.	7.242	**CLAMP**, STAB SHF INSL.	406887
11.	8.900	**BOLT**, HEX (3/8-16X1 3/4, CAD BR)	9439637
12.	8.915	**NUT**, HEX (5/8"-18)	9424988
13.	7.516	**WASHER**, RR SPR U-BOLT (21/32X1 1/2X15/64)	15550711
14.	7.518	**SPACER**, RR SPR U-BOLT	474978
15.	7.240	**BOLT**, RR STAB SHF LINK	328111
16.	8.929	**WASHER**, FL (M9.1X31.5X3.1)	10029761
17.	7.243	**INSULATOR**, RR STAB SHF LINK	6270752
18.	7.240	**LINK KIT**, RR STAB SHF	6258545
19.	7.245	**RETAINER**, RR STAB SHF LINK GROM	337957
20.	7.245	**NUT**, RR STAB SHF	14074909

© 1990 GENERAL MOTORS SERVICE PARTS OPERATIONS—LIGHT TRUCK 52R

NOTES

BLANK PAGE

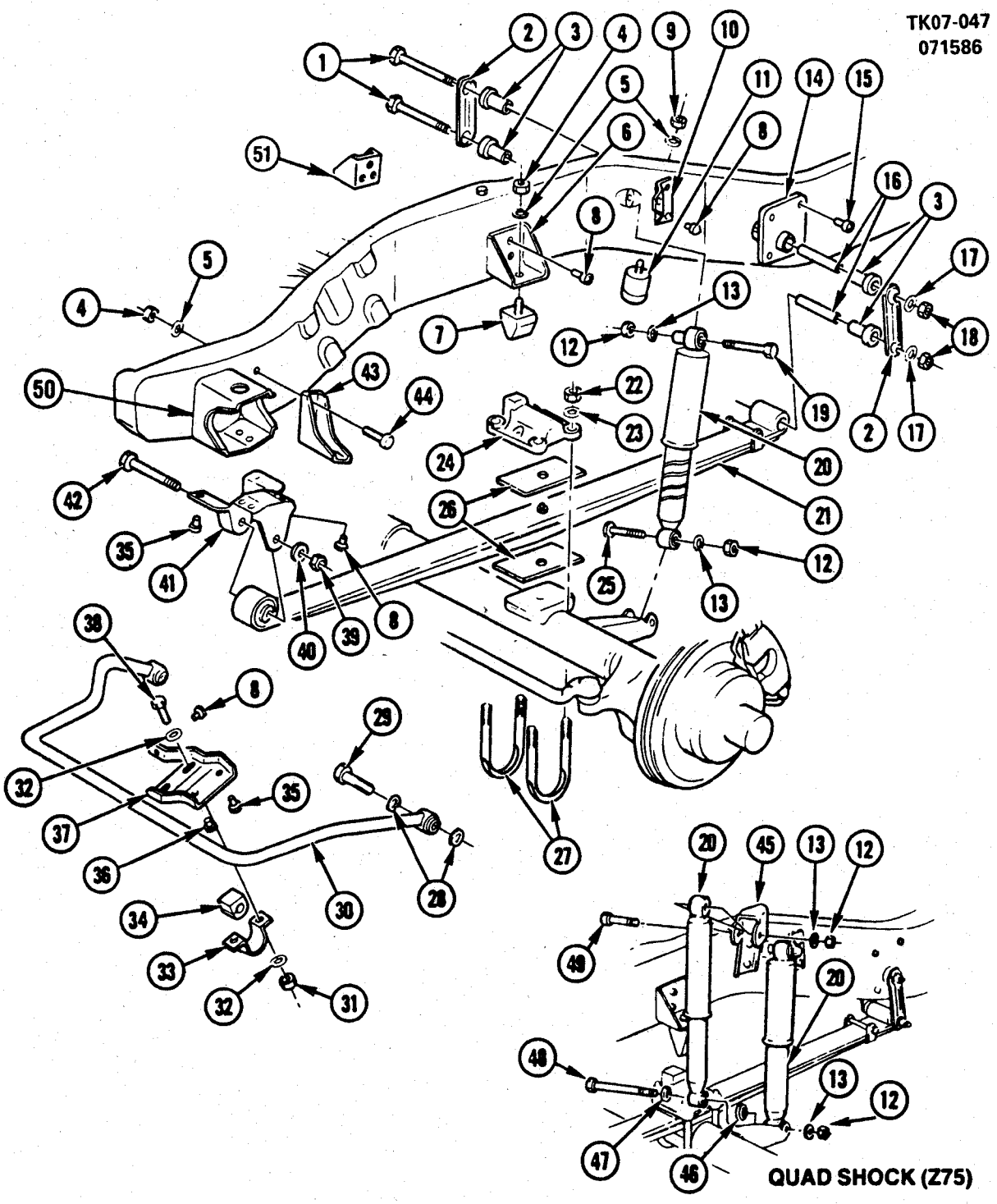
TK07-047
071586
QUAD SHOCK (Z75)
TK07-047

1985-1986 K SUSPENSION/FRONT
1987 V SUSPENSION/FRONT

1.	8.900	**BOLT** (7/16"-20X5")
2.	7.436	**SHACKLE ASM**, FRONT SPRING
3.	7.524	**BUSHING**, FRONT SPRING SHACKLE
4.	8.915	**NUT** (3/8"-16)
5.	8.931	**WASHER** (3/8")
6.	7.421	**BRACKET**, FRONT SPRING BUMPER
7.	7.422	**BUMPER**, FRONT SPRING
8.	8.967	**RIVET** (3/8"X7/8")
9.	8.915	**NUT** (3/8"-16)
10.	7.395	**BRACKET**, FRONT SHOCK ABSORBER FRAME
11.	7.422	**BUMPER**, FRONT SPRING
12.	8.915	**NUT** (1/2"-13)
13.	8.931	**WASHER** (1/2")
14.	7.105	**HANGER**, FRONT SPRING REAR
15.	8.967	**RIVET** (3/8"X1 1/4")
16.	7.425	**SPACER**, FRONT SPRING SHACKLE
17.	8.929	**WASHER** (7/16")
18.	8.917	**NUT** (7/16"-20)
19.	8.900	**BOLT** (1/2"-13X3 1/2")
20.	7.345	**ABSORBER ASM**, FRONT SHOCK
21.	7.412	**SPRING ASM**, FRONT (COMPLETE)(ALSO SERVICED BY THE FOLLOWING COMPONENTS)
	7.415	**LEAF**, SPR #1,2,3
	7.413	**BUSHING**, SPR EYE
	7.513	**SLEEVE**, SPR #2-#3 LEAF CLIP
	7.513	**CLIP**, SPR #3 LEAF
	7.506	**BOLT**, LEAF SPR CTR
	7.425	**SPACER**, SPR LEAF
22.	8.915	**NUT** (5/8"-18)
23.	8.929	**WASHER** (21/32"IDX1 1/4"ODX3/32"THK)
24.	7.425	**PLATE**, FRONT SPRING ANCHOR
25.	8.900	**BOLT** (1/2"-13X2 3/4")
26.	7.425	**SPACER**, FRONT SPRING (5 1/2"OLX2 1/2"THK)
27.	7.417	**BOLT**, "U" FRONT SPRING
28.	8.929	**WASHER** (13/16")
29.	7.242	**BOLT**, FRONT STABILIZER SHAFT (3/4"-10X3 1/4")
30.	7.241	**SHAFT**, FRONT STABILIZER
31.	8.917	**NUT** (7/16"-14)
32.	8.929	**WASHER** (15/32")
33.	7.242	**BRACKET**, FRONT STABILIZER SHAFT
34.	7.243	**BUSHING**, FRONT BAR TO FRAME (1 1/4"IDX1 1/2"HIGH)
35.	8.967	**RIVET** (3/8"X1")
36.	8.967	**RIVET** (3/8"X1 1/8")
37.	7.242	**BRACKET**, FRONT STABILIZER SHAFT FRAME
38.	8.900	**BOLT** (7/16"-14X1 1/2")
39.	8.917	**NUT** (9/16"-12)
40.	8.929	**WASHER** (19/32")
41.	7.105	**HANGER**, FRONT SPRING FRONT
42.	8.900	**BOLT** (9/16"-12X5")
43.	7.105	**REINFORCEMENT**, FRONT SPRING FRONT HANGER
44.	8.900	**BOLT** (3/8"-16X1")
45.	7.395	**BRACKET**, FRT S/ABS UPR
46.	7.347	**SPACER**, FRT S/ABS
47.	N.S.	**WASHER** (17/32"IDX1 1/16"ODX3/32"THK)
48.	8.900	**BOLT**, HEX (1/2"-13X5")(300M)
49.	N.S.	**BOLT**, HEX (1/2"-13X2 7/8")(280M)
50.	1.274	**BRACKET**, RAD SUPT
51.	7.421	**REINFORCEMENT**, FRT SPR BPR BRKT

© 1990 GENERAL MOTORS SERVICE PARTS OPERATIONS—LIGHT TRUCK 52R

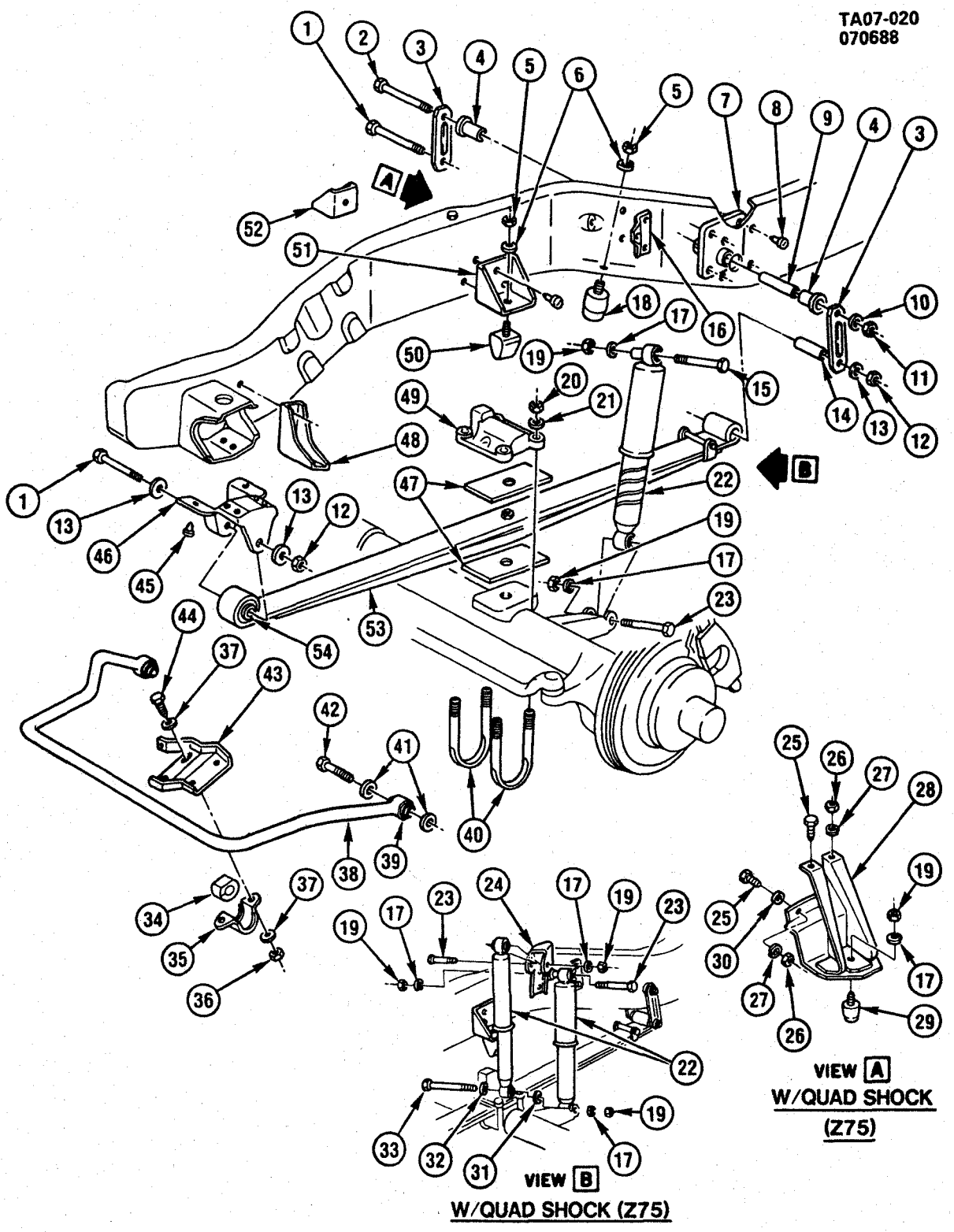
TA07-020
070688
VIEW A
W/QUAD SHOCK
(Z75)
VIEW B
W/QUAD SHOCK (Z75)
TA07-020

1988-1991 V SUSPENSION/FRONT

1.	7.105	**BOLT**, FRT SPR SHKL (9/16-12X5, 300M PHOS)(8.900)	9430840
2.	7.422	**BOLT**, FRT SPR SHKL (7/16-20X5.0, 300M)(8.900)	9430789
3.	7.436	**SHACKLE**, FRT SPRING (INCLS. #1,2,4,9,12,13,14)	15576190
4.	7.436	**INSULATOR**, FRT SPR SHKL	15565053
5.	8.915	**NUT**, HEX (3/8X16X21/64, 301 ZN)	9414034
6.	8.931	**WASHER**, SPR LK (3/8X11/16, ZOR)	9439512
7.	7.105	**HANGER**, FRT SPR RR	6271344
8.	8.967	**RIVET**, BUTTON HD CH PT (.375-1.250)	443663
9.	7.425	**SPACER**, FRT SPR SHKL	15571581
10.	8.929	**WASHER**, SPL STL (15/32 IDX1 1/8 ODX1/8)	3790768
11.	7.427	**NUT**, FRT SPR SHKL (7/16-20, 301M)(8.917)	9422300
12.	7.428	**NUT**, FRT SPR SHKL (9/16-12 GDE GM301M CAD)(8.917)	12338063
13.	8.929	**WASHER**, FL (9/16X1 1/8X1/16)	2441143
14.	7.413	**BUSHING**, FRT SPR	3887751
15.	7.105	**BOLT**, FRT S/ABS (1/2-13X3 1/2, 300M ZC)(8.900)	455005
16.	7.395	**BRACKET**, FRT S/ABS UPR-LH	3943493
	7.395	**BRACKET**, FRT S/ABS UPR-RH	3943494
17.	8.931	**WASHER**, SPR LK (1/2X7/8, ZOR)	9439514
18.	7.422	**BUMPER**, FRT SPR (ATTACHED TO FRAME)	359878
19.	8.915	**NUT**, HEX (1/2-13, CZ)	9414511
20.	7.417	**NUT**, FRT SPR U-BOLT (5/8-18)(8.915)	9424988
21.	8.929	**WASHER**, FL (.656X1.312X.095, ZC)	131016
22.	7.345	**ABSORBER**, FRT SHK (SEE CATALOG)	
23.	8.900	**BOLT**, HEX (1/2-13X2.88)	9422574
24.	7.395	**BRACKET**, FRT S/ABS UPR-LH	14072699
	7.395	**BRACKET**, FRT S/ABS UPR-RH	14072700
25.	8.900	**BOLT**, FLG HEX (3/8-16X1, 300M)	9424320
26.	8.915	**NUT**, HEX (3/8X16X21/64, 301 ZN)	9414034
27.	8.931	**WASHER**, SPR LK (7/16X25/32X7/64, ZOR)	9439513
28.	7.421	**BRACKET**, F/AXL BPR (V1,2)	15522381
	7.421	**BRACKET**, F/AXL BPR (V3)	14045654
29.	7.422	**BUMPER**, F/AXL	14029200
30.	8.929	**WASHER**, FL (15/32X15/16X1/16, ZP)	120395
31.	7.347	**SPACER**, FRT S/ABS	14029196
32.	7.347	**WASHER**, FRT S/ABS	1914842
33.	8.900	**BOLT**, HEX (1/2-13X5, 300M ZOR)	9439584
34.	7.243	**INSULATOR**, FRT STAB SHF	14015724
35.	7.242	**BRACKET**, FRT STAB SHF BUSHING	14015726
36.	8.917	**NUT**, HEX LK (7/16-14, 301M CAD)	9422299
37.	8.929	**WASHER**, FL (15/32X7/8X3/32)	3990160
38.	7.241	**SHAFT**, FRT STAB (INCL ITEM #39)	328132
39.	7.243	**BUSHING**, FRT STAB SHF	328128
40.	7.417	**BOLT**, FRT SPR U (SEE CATALOG)	
41.	7.243	**WASHER**, FRT STAB SHF	328131
42.	7.242	**BOLT**, FRT STAB SHF	328130
43.	7.242	**BRACKET**, FRT STAB SHF FRM-LH	328059
	7.242	**BRACKET**, FRT STAB SHF FRM-RH	328060
44.	8.900	**BOLT**, HEX (7/16-14X1 1/2, 300M PS)	9441552
45.	8.967	**RIVET**, BUT HD CH PT (.375-1.000)	443662
46.	7.105	**HANGER**, FRT SPR FRT-LH	326439
	7.105	**HANGER**, FRT SPR FRT-RH	326440
47.	7.425	**SPACER**, SPR (5.50 LG X 2.5 THK)	3970988
48.	7.105	**REINFORCEMENT**, FRT SPR HNGR	14029194
49.	7.425	**PLATE**, FRT SPR U-BOLT ANC-LH (V1,2)	379393
	7.425	**PLATE**, FRT SPR U-BOLT ANC-RH (V1,2)	379394
	7.425	**PLATE**, FRT SPR U-BOLT ANC-LH (V3)	370055
	7.425	**PLATE**, FRT SPR U-BOLT ANC-RH (V3)	370056
50.	7.422	**BUMPER**, FRT SPR (ATTCHS TO BRKT)	359877
51.	7.421	**BRACKET**, FRT SPR BPR	460397
52.	7.421	**REINFORCEMENT**, FRT SPR BPR BRKT-LH	14045645
	7.421	**REINFORCEMENT**, FRT SPR BPR BRKT-RH	14045646
53.	7.412	**SPRING**, FRT (SEE CATALOG)	
54.	7.413	**BUSHING**, FRT SPR	3887751

© 1990 GENERAL MOTORS SERVICE PARTS OPERATIONS—LIGHT TRUCK 52R

T7-19
042789

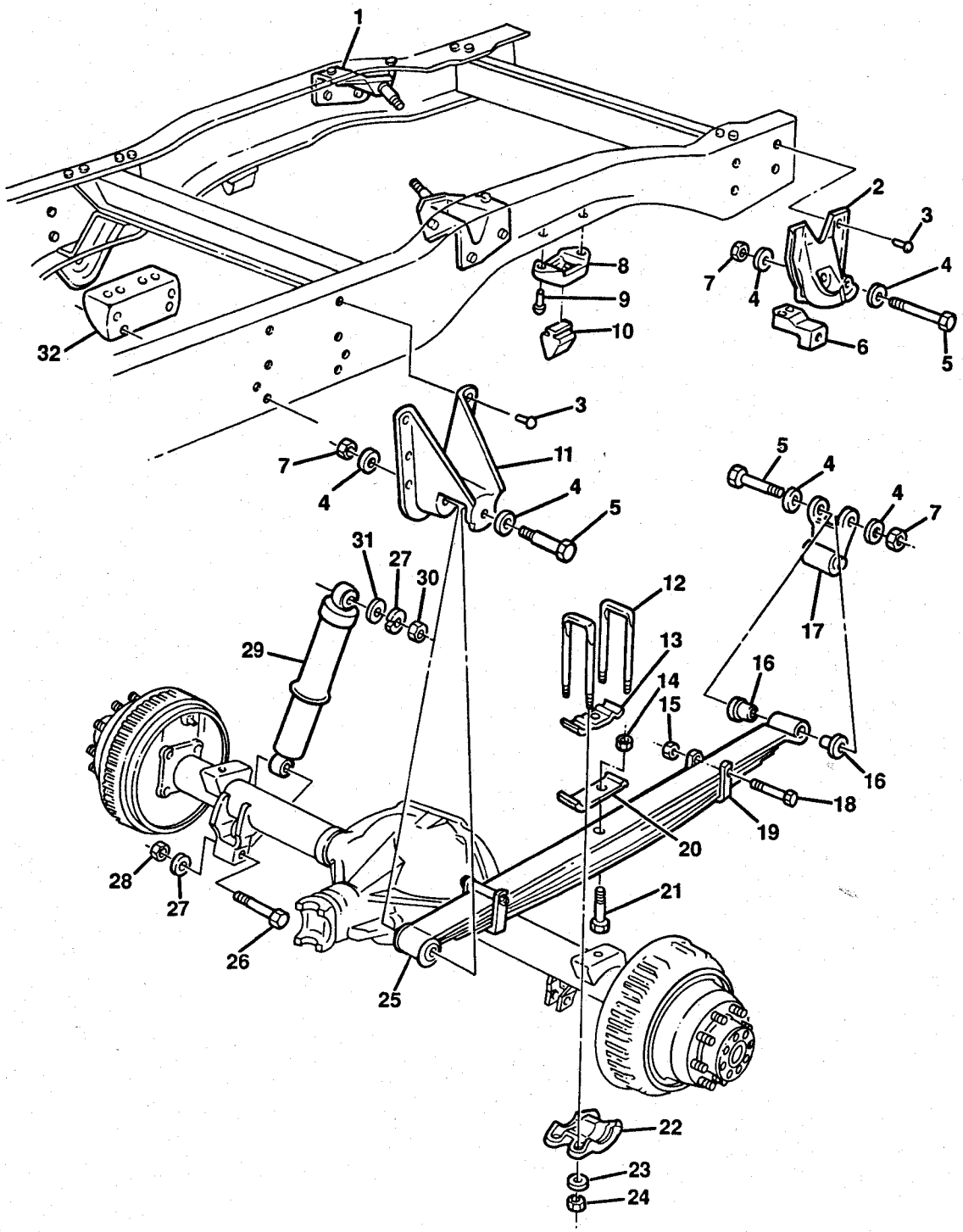

T7-19

© 1990 GENERAL MOTORS SERVICE PARTS OPERATIONS—LIGHT TRUCK 52R

1985-1986 C2(43) SUSPENSION/REAR
1985-1986 CK3 SUSPENSION/REAR (EXC AUXILIARY SPRINGS)
1987-1989 R2(43) SUSPENSION/REAR
1987-1991 RV3 SUSPENSION/REAR (EXC AUXILIARY SPRINGS)

1.	7.380	**BRACKET ASM**, REAR SHOCK ABSORBER FRAME	334666
2.	7.112	**HANGER**, REAR SPRING REAR (C/R)	332858
	7.112	**HANGER**, REAR SPRING REAR (K/V)	14000211
3.	N.S.	**RIVET**, (3/8X1)	
4.	8.929	**WASHER**, FL (9/16X1 1/8X1/16, ZP)	2441143
5.	8.900	**BOLT**, HEX (9/16-12X4.50)	15640771
6.	7.112	**REINFORCEMENT**, REAR HANGER (C/R)	332702
	7.112	**REINFORCEMENT**, REAR HANGER (K/V)	14000212
7.	8.917	**NUT**, PREV TORQ HEX (9/16-12, 301M CAD)	12338063
8.	5.394	**BRACKET**, REAR AXLE (C/R)	371596
	5.394	**BRACKET**, REAR AXLE (K/V)	14000214
9.	N.S.	**RIVET**, (.365X1.00)	
10.	5.395	**BUMPER**, REAR AXLE (C/R)	6263975
	5.395	**BUMPER**, REAR AXLE (K/V)	3764438
11.	7.112	**HANGER**, REAR SPRING FRONT (C/R)	14005121
	7.112	**HANGER**, REAR SPRING FRONT (K/V)	14000209
12.	7.516	**BOLT**, "U" REAR SPRING (SEE CATALOG)	
13.	7.518	**SPACER**, REAR SPRING "U" BOLT	337520
14.	8.915	**NUT**, HEX (3/8-24, 301M ZC)	225854
15.	8.915	**NUT**, HEX (3/8-16, 286M)	124829
16.	7.504	**BUSHING**, RR SPR SHACKLE & RR SPR FRT & RR EYE	468481
17.	7.523	**SHACKLE ASM**, REAR SPRING	14022597
18.	8.900	**BOLT**, HEX (3/8-16X3 1/2, 300M)	9430723
19.	7.513	**CLIP**, REAR SPRING (SEE CATALOG)	
20.	7.518	**SPACER**, RR SPR "U" BOLT(SEE CATALOG)	
21.	7.506	**BOLT**, REAR LEAF SPRING	3931287
22.	7.518	**PLATE**, ANCHOR (SEE CATALOG)	
23.	8.929	**WASHER**, FL (.656X1.312X.095, ZC)	131016
24.	8.915	**NUT**, REAR SPRING U-BOLT	9424988
25.	7.503	**SPRING**, REAR (SEE CATALOG)	
26.	8.900	**BOLT**, HEX (9/16-12X3, 280M)	9419138
27.	8.931	**WASHER**, SPR LK (3/8X11/16, ZOR)	9439514
28.	8.915	**NUT**, HEX (9/16-12, ZC)	9433353
29.	7.345	**ABSORBER ASM**, REAR SHOCK (SEE CATALOG)	
30.	8.915	**NUT**, HEX (1/2-13, CZ)	9414511
31.	8.929	**WASHER**, FLAT (1/2X1X1/16, ZC)	2436165
32.	7.112	**REINFORCEMENT**, RR SPR FRT HNGR-LH (K/V3)	14041287
	7.112	**REINFORCEMENT**, RR SPR FRT HNGR-RH (K/V3)	14041288

© 1990 GENERAL MOTORS SERVICE PARTS OPERATIONS—LIGHT TRUCK 52R

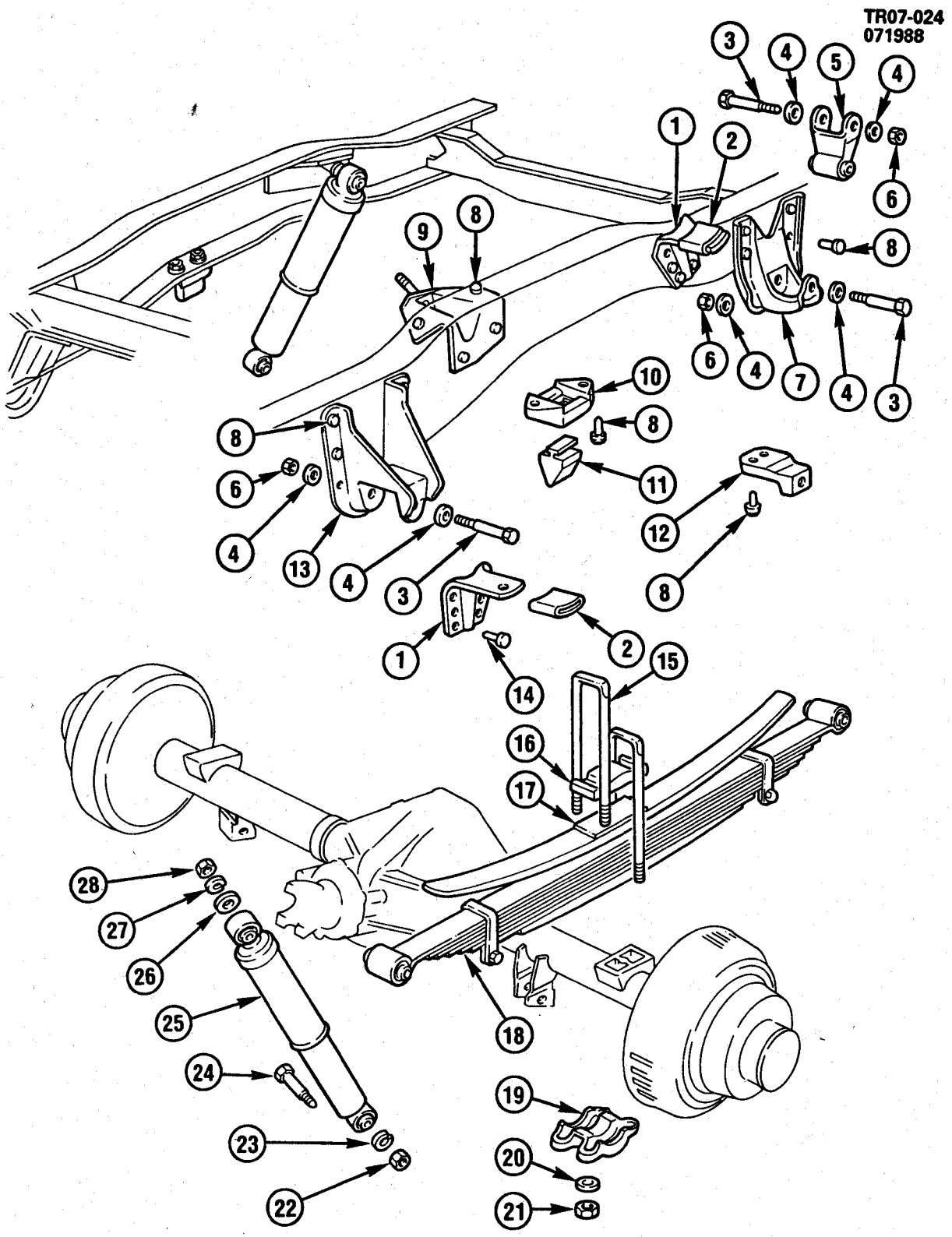

© 1990 GENERAL MOTORS SERVICE PARTS OPERATIONS—LIGHT TRUCK 52R

1985-1986 C3 SUSPENSION/REAR (W/AUXILIARY SPRINGS)
1987-1991 R3 SUSPENSION/REAR (W/AUXILIARY SPRINGS)

1.	7.526	**BRACKET**, AUX SPR	328200
2.	7.545	**CUSHION**, AUX SPR BRKT	328169
3.	7.529	**BOLT**, RR SPR (9/16-12X4.50)(8.900)	15640771
4.	8.929	**WASHER**, FL (9/16X1 1/8X1/16, ZP)	2441143
5.	7.523	**SHACKLE**, RR SPR	14022597
6.	7.530	**NUT**, RR SPR (9/16-12, 301M CAD)(8.917)	12338063
7.	7.112	**HANGER**, RR SPR RR	332858
8.	N.S.	**RIVET**, BUT HD CHAM (.365X1, PL)	
9.	7.380	**BRACKET**, RR S/ABS FRM	334666
10.	5.394	**BRACKET**, RR AXLE BPR	371596
11.	5.395	**BUMPER**, RR AXLE	6263975
12.	7.112	**REINFORCEMENT**, RR SPR RR HNGR	332702
13.	7.112	**HANGER**, RR SPR FRT	14005121
14.	N.S.	**RIVET**, BUT HD CHAM (.375X1.125, CP)	
15.	7.516	**BOLT**, RR SPR U (SEE CATALOG)	
16.	7.518	**SPACER**, RR SPR U-BOLT (SEE CATALOG)	
17.	7.425	**SPACER**, SPR (5.50LX2.5 THK)	3970988
18.	7.503	**SPRING**, RR (SEE CATALOG)	
19.	7.518	**PLATE**, RR SPR U-BOLT ANC	
20.	7.516	**WASHER**, RR SPR U-BOLT	15550711
21.	7.516	**NUT**, RR SPR U-BOLT (.625-18, CB)(8.915)	9424988
22.	8.915	**NUT**, HEX (9/16-12, ZC)	9433353
23.	8.931	**WASHER**, HS (9/16, ZC ORG)	9439515
24.	8.900	**BOLT**, HEX (9/16-12X3, 280M)	9419138
25.	7.345	**ABSORBER**, RR SHK (SEE CATALOG)	
26.	8.929	**WASHER**, FLAT (1/2X1X1/16, ZC)	2436165
27.	8.931	**WASHER**, SPR LK (.50X.87, ZOR)	9439514
28.	8.915	**NUT**, HEX (1/2-13, CZ)	9414511

© 1990 GENERAL MOTORS SERVICE PARTS OPERATIONS—LIGHT TRUCK 52R

T7-18
042789

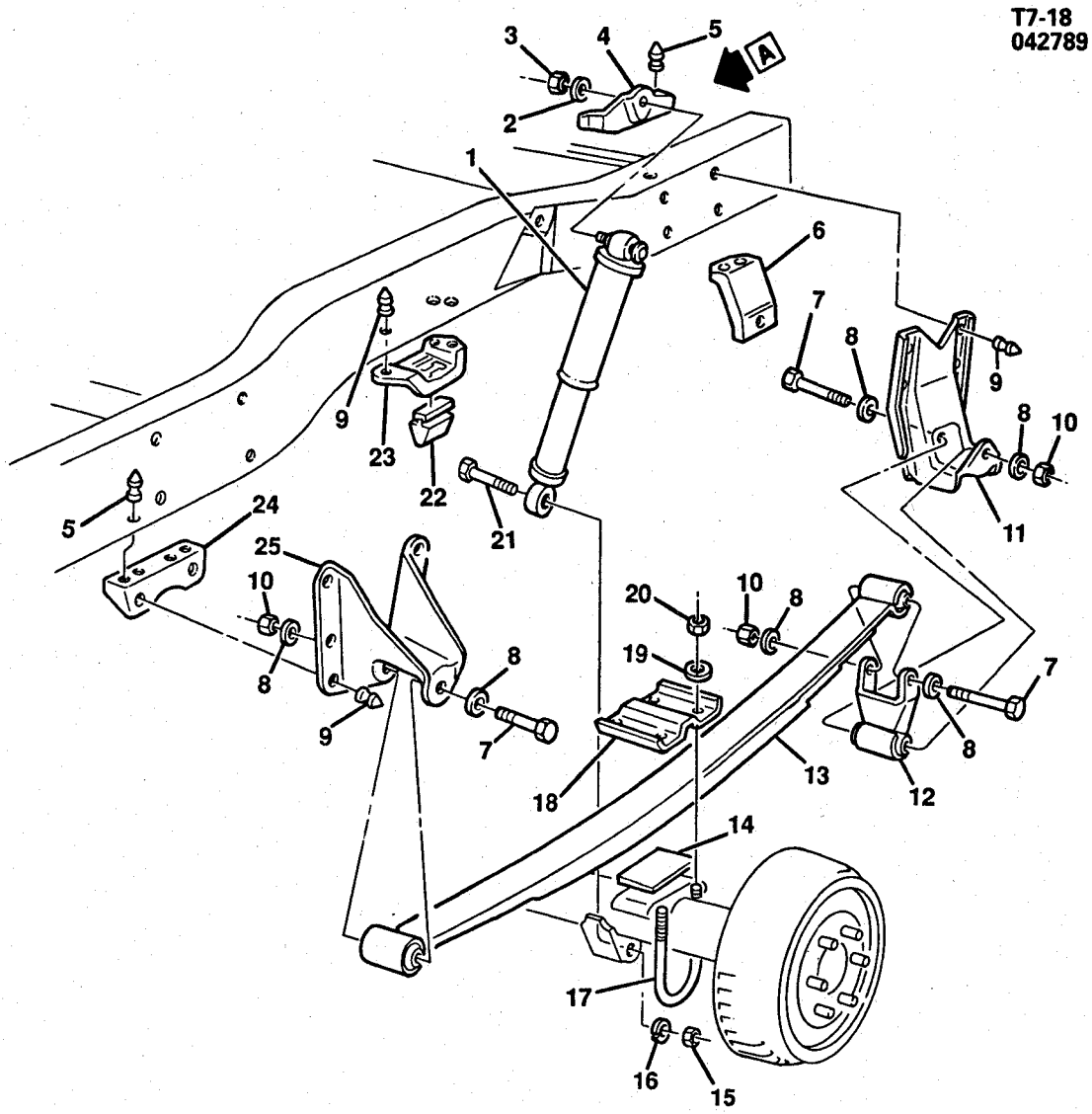

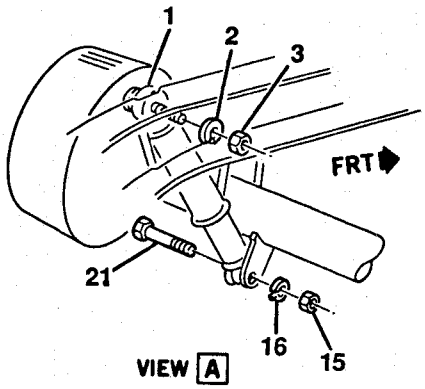

VIEW A
RIGHT SIDE

T7-18

© 1990 GENERAL MOTORS SERVICE PARTS OPERATIONS—LIGHT TRUCK 52R

1985-1986 CK1,2 SUSPENSION/REAR
1987-1991 RV1,2 SUSPENSION/REAR

1.	7.345	**ABSORBER ASM**, REAR SHOCK(*1)	
2.	8.931	**WASHER**, (9/16)	9439516
3.	8.915	**NUT**, (9/16-18)	9422306
4.	7.380	**BRACKET**, LEFT REAR SHOCK ABSORBER FRAME (06-16)	6271341
5.	N.S.	**RIVET**, (3/8X1 1/8)	
6.	7.112	**REINFORCEMENT**, RR SPR RR HNGR (K/V1-2)	6270214
7.	7.529	**BOLT**, RR SPR (8.900)(9/16-12X4 1/2)	15640771
8.	8.929	**WASHER**, FLAT (9/16X1 1/8X1/16)	2441143
9.	N.S.	**RIVET**, (3/8X1)	
10.	7.530	**NUT**, RR SPR (8.917)(9/16-12)	12338063
11.	7.112	**HANGER**, REAR SPRING REAR (C/R1,2)	471698
	7.112	**HANGER**, REAR SPRING REAR (K/V1,2)	6270213
12.	7.523	**SHACKLE**, REAR SPR	14022597
13.	7.503	**SPRING ASM** (*1)	14032937
14.	7.518	**PLATE**, REAR SPRING (C2/R2)(*1)	362275
15.	8.915	**NUT**, (9/16-12)	9433353
16.	8.931	**WASHER**, (9/16)	9439515
17.	7.516	**BOLT**, "U" REAR SPRING (R1)(*1)	326489
18.	7.518	**PLATE**, ANCHOR (CK1/RV1)	6263945
	7.518	**PLATE**, ANCHOR (CK2/RV2)	334527
19.	8.929	**WASHER**, (21/32X1 5/16)	131016
20.	8.915	**NUT**, (5/8-18)	9424988
21.	8.900	**BOLT**, (9/16-12X3)	9419138
22.	5.395	**BUMPER**, REAR AXLE (C/R)	6263975
	5.395	**BUMPER**, REAR AXLE (K/V)	3764438
23.	5.394	**BRACKET**, REAR AXLE BUMPER (C2/R2)(*1)	332756
24.	7.112	**SUPPORT**, REAR SPRING FRT HANGER (C2/R2)(*1)	14041289
25.	7.112	**HANGER**, REAR SPRING FRONT (C2/R2)(*1)	332762

NOTE 1: FOR ADDITIONAL PART NUMBERS SEE CATALOG.

© 1990 GENERAL MOTORS SERVICE PARTS OPERATIONS—LIGHT TRUCK 52R

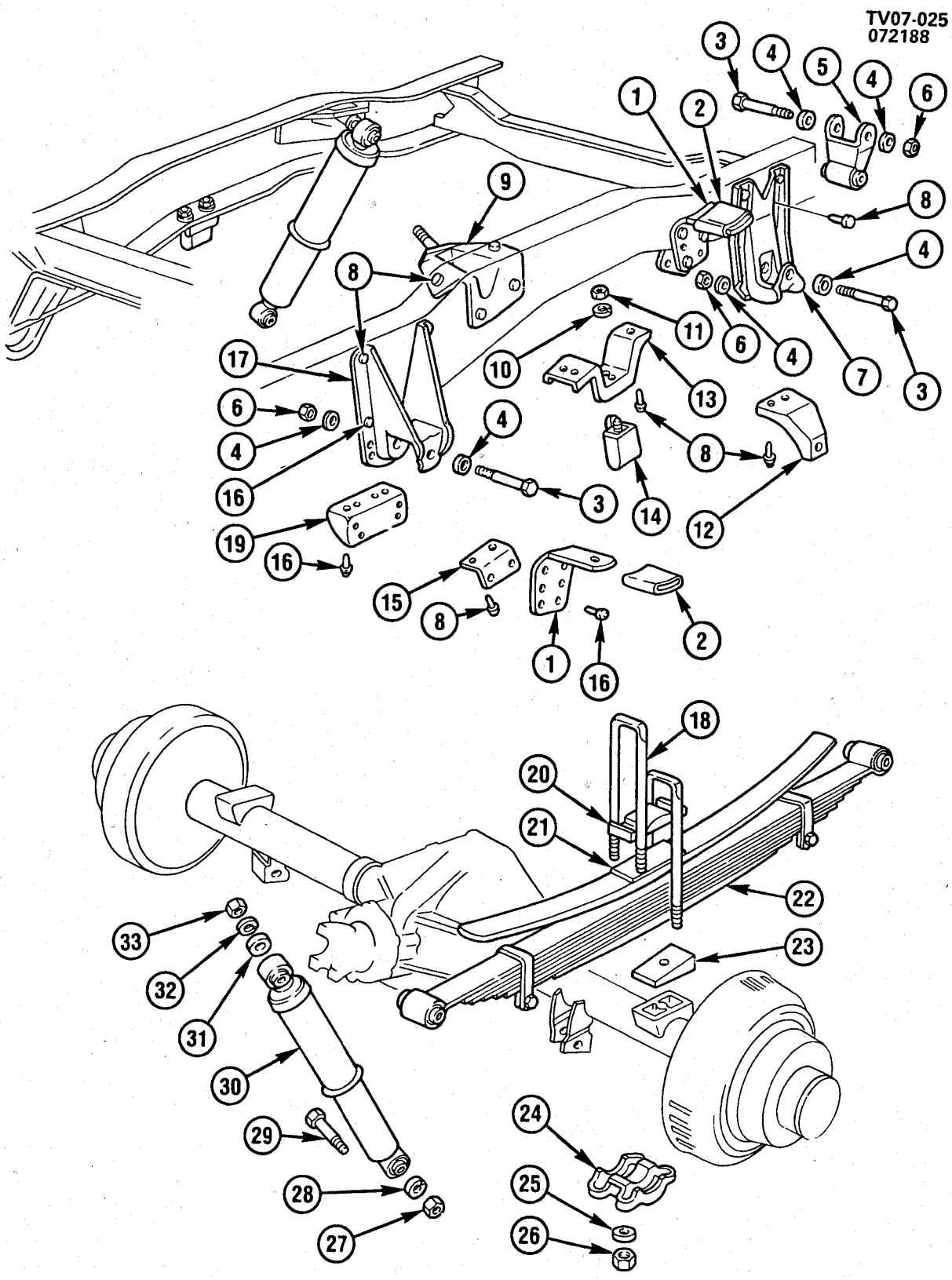

© 1990 GENERAL MOTORS SERVICE PARTS OPERATIONS—LIGHT TRUCK 52R

1985-1986 K3 SUSPENSION/REAR (W/AUXILIARY SPRINGS)
1987-1991 V3 SUSPENSION/REAR (W/AUXILIARY SPRINGS)

1.	7.526	**BRACKET**, AUX SPR	328200
2.	7.545	**CUSHION**, AUX SPR BRKT	328169
3.	7.529	**BOLT**, RR SPR (9/16-12X4.50)(8.900)	15640771
4.	8.929	**WASHER**, FL (9/16X1 1/8X1/16, ZP)	2441143
5.	7.523	**SHACKLE**, RR SPR	14022597
6.	7.530	**NUT**, RR SPR (9/16-12, 301M CAD)(8.917)	12338063
7.	7.112	**HANGER**, RR SPR RR	14000211
8.	N.S.	**RIVET**, BUT HD CHAM (.365X1, PL)	
9.	7.380	**BRACKET**, RR S/ABS FRM	334666
10.	8.931	**WASHER**, SPR LK (7/16X25/32X7/64, ZOR)	9439513
11.	8.915	**NUT**, HEX (3/8X16X21/64, 301 ZN)	9414034
12.	7.112	**REINFORCEMENT**, RR SPR RR HNGR	14000212
13.	5.394	**BRACKET**, RR AXLE BPR	14000214
14.	5.395	**BUMPER**, RR AXLE	3764438
15.	7.526	**REINFORCEMENT**, AUX SPR BRKT	14000213
16.	N.S.	**RIVET**, BUT HD CHAM (.375X1.125, CP)	
17.	7.112	**HANGER**, RR SPR FRT	14000209
18.	7.516	**BOLT**, RR SPR U (SEE CATALOG)	
19.	7.112	**REINFORCEMENT**, RR SPR FRT HNGR-LH	14041287
	7.112	**REINFORCEMENT**, RR SPR FRT HNGR-RH	14041288
20.	7.518	**SPACER**, RR SPR U-BOLT (SEE CATALOG)	
21.	7.425	**SPACER**, SPR (5.50LX2.5 THK)	3970988
22.	7.503	**SPRING**, RR (SEE CATALOG)	
23.	7.518	**SPACER KIT**, RR SPR (1985-88)	488369
24.	7.518	**PLATE**, RR SPR U-BOLT ANC	362275
25.	8.929	**WASHER**, FL (.656X1.312X.095, ZC)	131016
26.	7.516	**NUT**, RR SPR U-BOLT (.625-18, CB)(8.915)	9424988
27.	8.915	**NUT**, HEX (9/16-12, ZC)	9433353
28.	8.931	**WASHER**, HS (9/16, ZC ORG)	9439515
29.	8.900	**BOLT**, HEX (9/16-12X3, 280M)	9419138
30.	7.345	**ABSORBER**, RR SHK (SEE CATALOG)	
31.	8.929	**WASHER**, FLAT (1/2X1X1/16, ZC)	2436165
32.	8.931	**WASHER**, SPR LK (.50X.87, ZOR)	9439514
33.	8.915	**NUT**, HEX (1/2-13, CZ)	9414511

© 1990 GENERAL MOTORS SERVICE PARTS OPERATIONS—LIGHT TRUCK 52R

TA07-002
062288

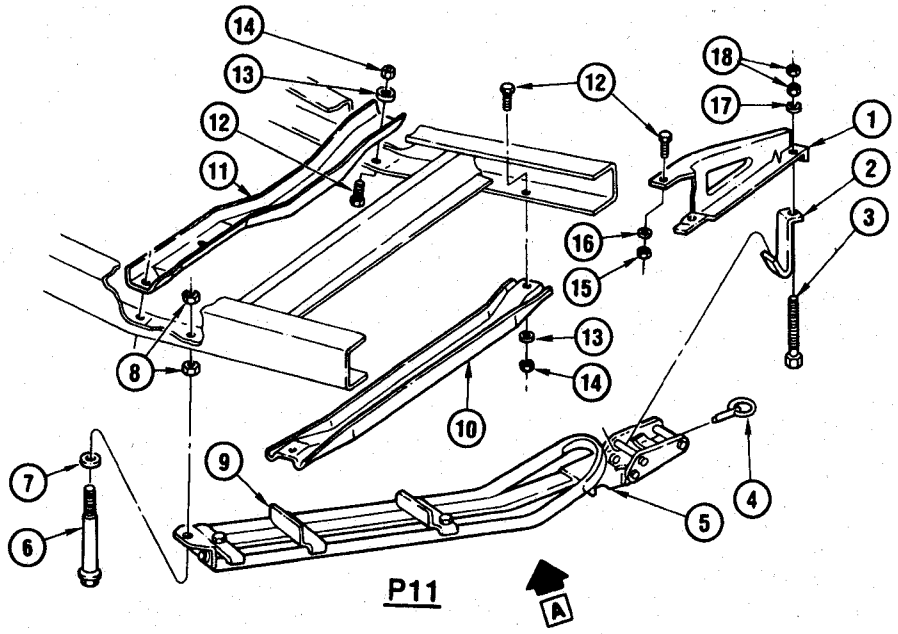

P11

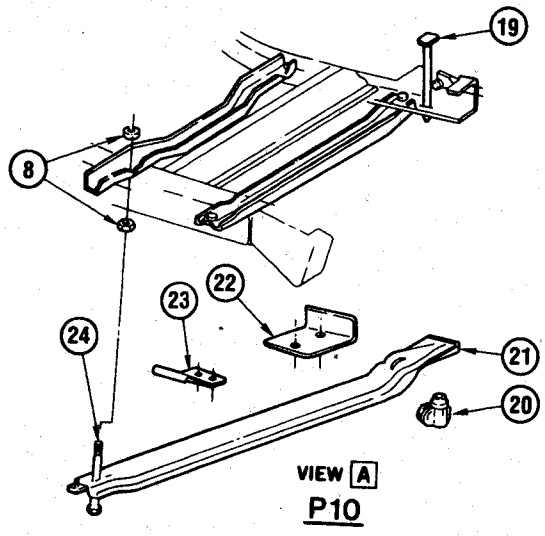

P10

TA07-002

© 1990 GENERAL MOTORS SERVICE PARTS OPERATIONS—LIGHT TRUCK 52R

1985-1986 CK(03-43) SPARE WHEEL CARRIER/FRAME MOUNTED (P10)/GLIDE-OUT (P11)
1987-1991 RV(03-43) SPARE WHEEL CARRIER/FRAME MOUNTED (P10)/GLIDE-OUT (P11)

1.	7.629	**SUPPORT**, CARR HOOK	355448
2.	7.629	**HOOK**, WHL CARR	357910
3.	7.632	**BOLT**, CARR HOOK	14061311
4.	N.S.	**PIN**, (PART OF ITEM #5)	
5.	7.629	**CARRIER**, SPA WHL	14055559
6.	7.632	**BOLT**, WHL STOW (1/2-13X10 7/8)	371605
	7.632	**BOLT**, WHL STOW (1/2-13X11 1/2)	371603
7.	8.929	**WASHER**, PLAIN (.531, CZ)	120396
8.	8.915	**NUT**, HEX (1/2-13, CZ)	9414511
9.	N.S.	**GUIDE**, (PART OF ITEM #5)	
10.	7.629	**BAR**, CROSS RR (1985-87)	6274020
11.	7.629	**BAR**, CROSS FRT	15595211
12.	8.900	**BOLT**, HEX (.375-16X.875, 300M)	9442119
13.	8.929	**WASHER**, FL (M10.8X18.8X2.3, PS)	11509161
14.	8.917	**NUT**, HEX LK (3/8-16, 301M CAD)	9422297
15.	8.915	**NUT**, HEX (3/8X16X21/64, 301 ZN)	9414034
16.	8.931	**WASHER**, SPR LK (7/16X25/32X7/64, ZOR)	9439513
17.	8.929	**WASHER**, FL (15/32X7/8X3/32)	3990160
18.	8.915	**NUT**, HEX (7/16-14, 301M)	9424985
19.	7.632	**BOLT**, CR STRP	3991022
20.	7.633	**NUT**, WHL CARR CROSS STRAP	6274031
21.	7.629	**STRAP**, WHL CARR CR	350036
22.	7.629	**GUIDE**, WHL CARR CENTERING RR	6274036
23.	7.629	**GUIDE**, WHL CARR CENTERING FRT	350037
24.	7.632	**BOLT**, WHL CARR CR STRAP	371603

© 1990 GENERAL MOTORS SERVICE PARTS OPERATIONS—LIGHT TRUCK 52R

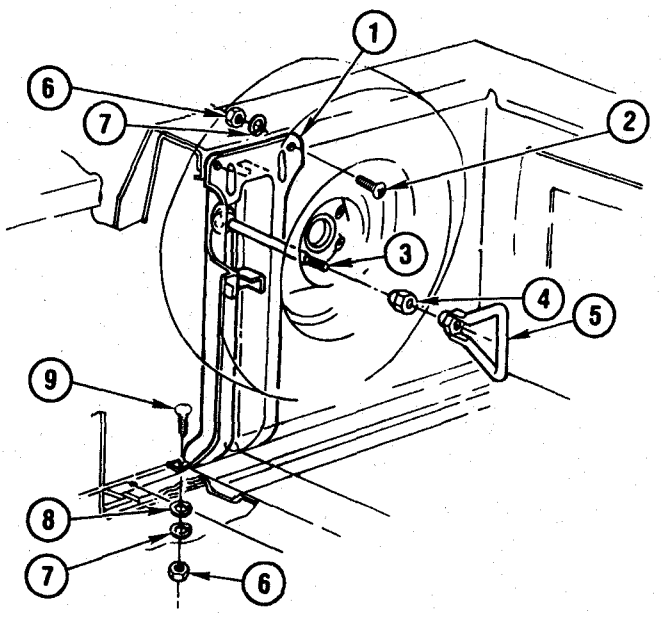

TA07-015

1985-1986 CK(03-43) SPARE WHEEL CARRIER/SIDE MOUNTED (P13)
1987-1991 RV(03-43) SPARE WHEEL CARRIER/SIDE MOUNTED (P13)

* 1.	7.629	**CARRIER**, SPA WHL	325482
2.	8.913	**SCREW**, PAN C/R (5/16-18X7/8)	9437685
3.	7.632	**BOLT**, WHL CARR (W/DUAL WHLS)	342930
	7.632	**BOLT**, SPA WHL STOW (EXC DUAL WHLS)	14037144
4.	5.813	**NUT**, SPA WHL STOW (W/DUAL WHLS)	334387
5.	7.633	**NUT**, SPA WHL STOW (EXC DUAL WHLS)	14037169
6.	8.915	**NUT**, HEX (5/16-18X.25, 286M POR)	9439493
7.	8.931	**WASHER**, SPR LK (5/16, PL)	9439511
8.	8.929	**WASHER**, FLAT (11/32X11/16X3/16)	3834560
9.	8.903	**BOLT**, RD HD SHORT SQ NK (5/16-18X7/8)	9438059

© 1990 GENERAL MOTORS SERVICE PARTS OPERATIONS—LIGHT TRUCK 52R

TA07-031
102088

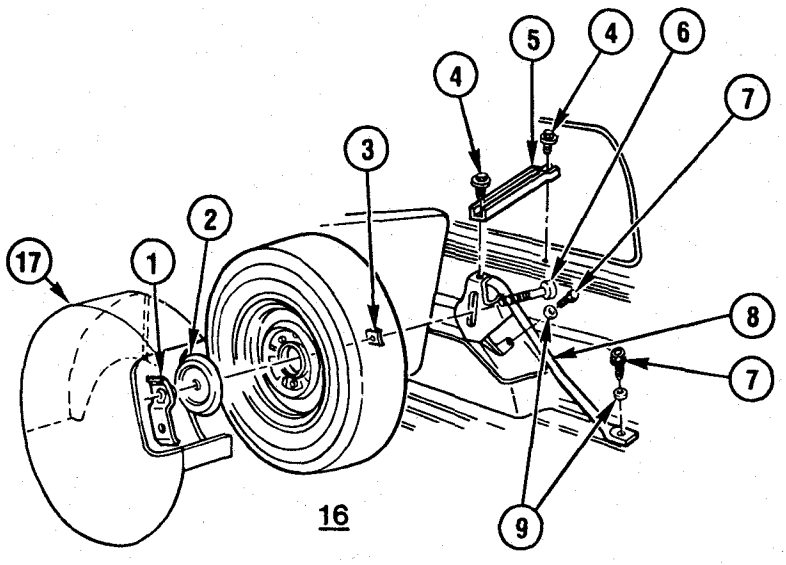

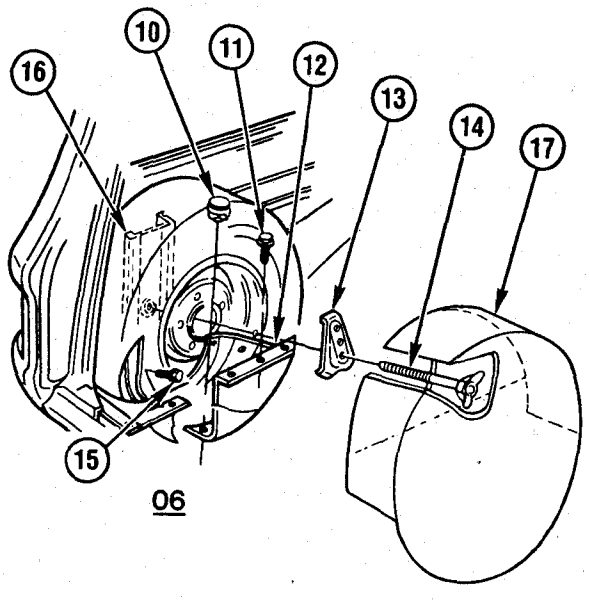

TA07-031

1985-1986 CK(06-16) SPARE WHEEL CARRIER
1987-1991 RV(06-16) SPARE WHEEL CARRIER

1.	7.633	**RETAINER**, SPA WHL	330046
2.	7.629	**PLATE**, SPA WHL CARR	14027926
3.	8.921	**NUT**, PUSH ON (.88X1.25)(.44-.50 STUD)	3725668
4.	7.629	**SCREW**, WHL CARR BR	327042
5.	7.629	**BRACE**, WHL CARR	14007545
6.	8.903	**BOLT**, RD HD SQ NK (1/2-13X2 1/2, 260M)	15599432
7.	16.714	**BOLT**, SPA WHL CARR (16.714)	3954730
8.	7.629	**SUPPORT**, WHL CARR	343951
9.	8.929	**WASHER**, PLAIN (.531, CZ)	120396
10.	16.565	**PLUG**, SPA WHL WELL DRN (10.587)(1985-86)	10064600
	16.565	**PLUG**, SPA WHL WELL DRN (12.981)(1987-91)	10064600
11.	8.900	**BOLT**, HEX LG FL WA (5/16-18X.88, POR)	12337916
12.	16.565	**WELL**, SPARE TIRE	15596982
13.	7.633	**RETAINER**, SPA WHL (3 HOLES)	342923
14.	7.632	**BOLT**, SPA WHL WING	325191
15.	8.900	**BOLT**, HEX (5/16-18X5/8, 280M)	180075
	8.931	**WASHER**, LK (5/16, PL)	9439511
16.	N.S.	**SUPPORT**, SPA WHL (PART OF SIDE, BODY GROUP 16.570)	

© 1990 GENERAL MOTORS SERVICE PARTS OPERATIONS—LIGHT TRUCK 52R

17. 7.629 **COVER**, SPARE TIRE (SEE CATALOG) .....

© 1990 GENERAL MOTORS SERVICE PARTS OPERATIONS—LIGHT TRUCK 52R

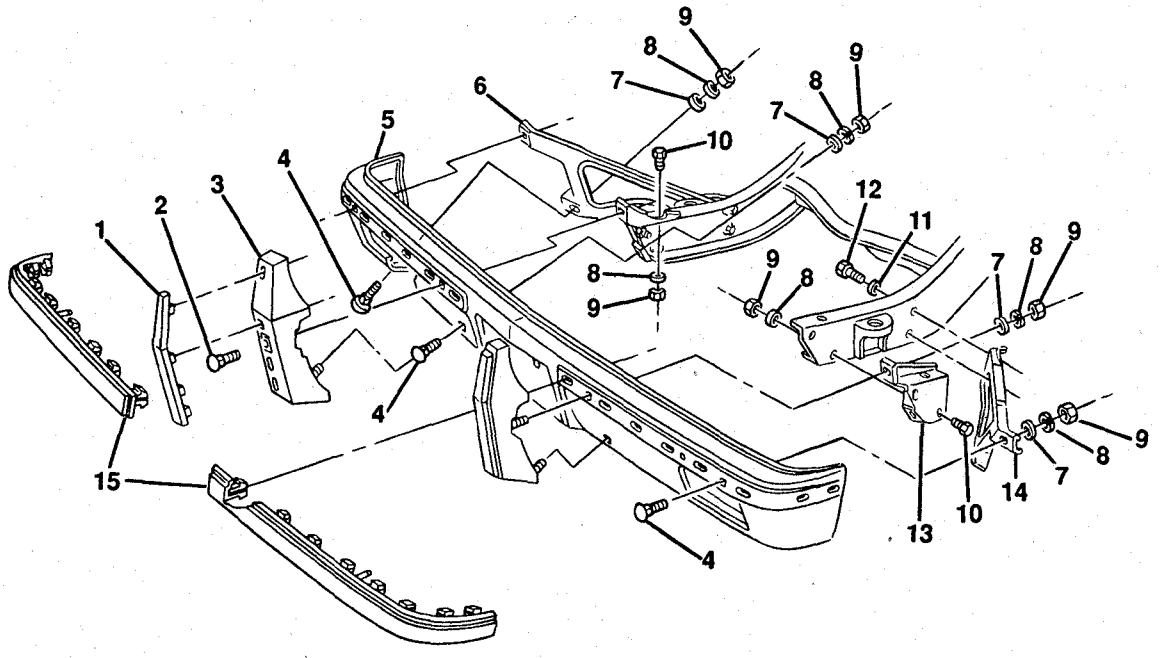

TZR07-03

1985-1986 CK BUMPER/FRONT
1987-1991 RV BUMPER/FRONT

1.	7.828	**STRIP**, BUMPER GUARD	467300
2.	7.829	**BUSHING KIT**, FRT BPR GUARD(V31)	358059
3.	7.828	**GUARD**, FRONT BUMPER-LH (W/GUARDS V31)	14022881
	7.828	**GUARD**, FRONT BUMPER-RH (W/GUARDS V31)	14022882
	7.828	**GUARD**, FRT BPR-LH (RV1,2 06-16)(W/GUARDS VG3)(1990-91)	15614471
	7.828	**GUARD**, FRT BPR-RH (RV1,2,06-16)(W/GUARDS VG3)(1990-91)	15614472
4.	8.903	**BOLT**, RND HD SQ NK W/SST CAP (1/2-13X2)(*1)	340734
	8.903	**BOLT**, RND HD SQ NK (1/2-13X1 1/2)(*2)	9437273
5.	7.831	**BAR**, BUMPER (CHROME)(EXC IMP STRIP)	14043720
	7.831	**BAR**, BUMPER (CHROME)(W/IMP STRIP)(1985-89)	14043721
	7.831	**BAR**, FRT BPR IMP (W/8E8 PAINTED BUMPER,5U7 CARRIER & SPARE WHEEL)	14063124
6.	7.836	**BRACE**, BAR OUTER-RH	15606578
7.	8.929	**WASHER**, FLAT (.531X1.25X.119)	3983589
8.	8.931	**WASHER**, LOCK (1/2X1X1/16,ZINC)	2436165
9.	8.915	**NUT**, HEX (1/2-13)	9414511
10.	8.900	**BOLT**, HEX (1/2-13X1 1/4)	9425082
11.	8.929	**WASHER**, SPL STL (15/32 IDX1 1/8 ODX1/8)	3790768
12.	8.900	**BOLT**, HEX (7/16-14X1 1/4)	9424069
13.	7.836	**BRACKET**, BAR OUTER-LH	14064637
	7.836	**BRACKET**, BAR OUTER-RH	14064638
14.	7.836	**BRACE**, BAR OUTER-LH (1985-87)	14045515
	7.836	**BRACE**, FRT BPR IMP BAR OTR-LH (1988-91)	15606577
15.	7.831	**STRIP**, OUTER RUB IMP-LH (W/VG3 FRONT BUMPER IMPACT STRIP)(1985-88)	14026497
	7.831	**STRIP**, OUTER RUB IMP-LH (W/VG3 FRONT BUMPER IMPACT STRIP)(1989-90)	15571635
	7.831	**STRIP**, OUTER RUB IMP-RH (W/VG3 FRONT BUMPER IMPACT STRIP(1985-88)	14026498
	7.831	**STRIP**, OUTER RUB IMP-RH (W/VG3 FRONT BUMPER IMPACT STRIP)(1989-90)	15571636

NOTE 1: USED IN ALL LOCATIONS EXCEPT UNDER IMPACT STRIP ON BUMPERS SO EQUIPPED.
NOTE 2: USED UNDER IMPACT STRIP ONLY, ON BUMPERS SO EQUIPPED.

RPO DEFINITIONS
VG3 - STRIP, FRT BUMPER IMPACT
V31 - GUARDS, BUMPER, FRT, CHROME

© 1990 GENERAL MOTORS SERVICE PARTS OPERATIONS—LIGHT TRUCK 52R

RPO DEFINITIONS
8E8 - BUMPER, PAINTED FRONT
V31 - GUARDS,FRONT BUMPER(CHROME)

© 1990 GENERAL MOTORS SERVICE PARTS OPERATIONS—LIGHT TRUCK 52R

TZR07-02
052290

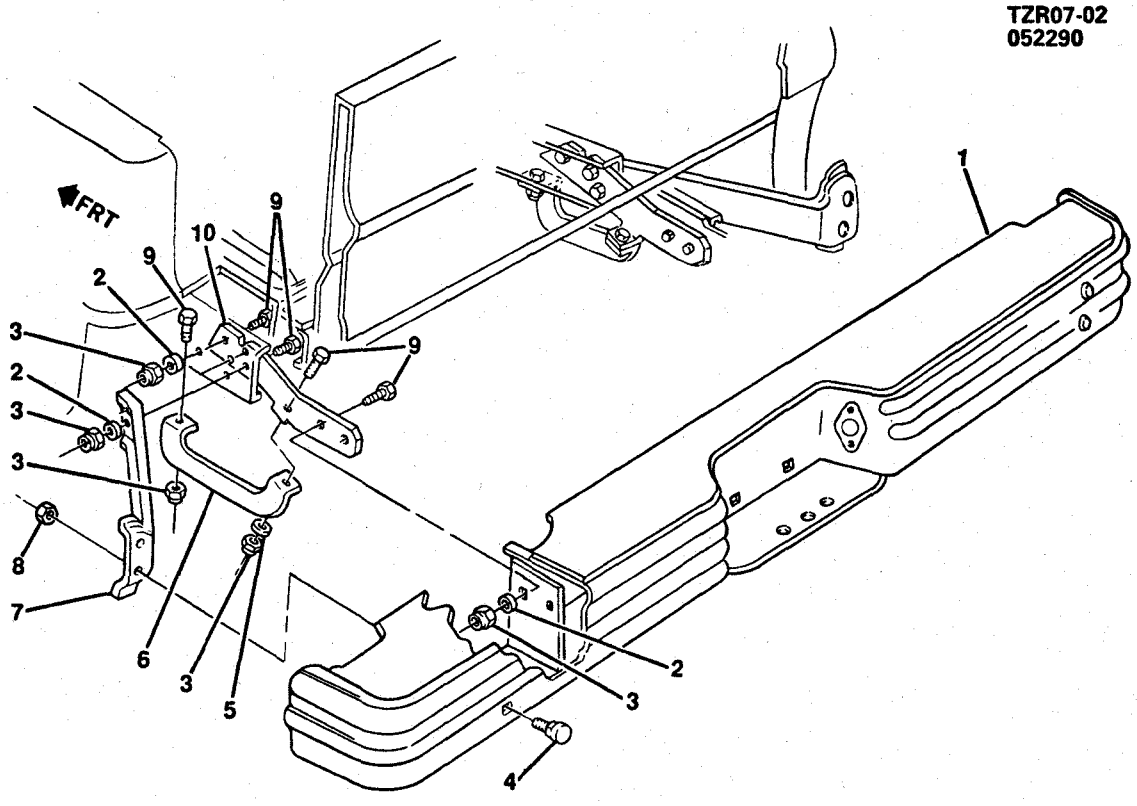

TZR07-02

1985-1986 CK(03-43) BUMPER/REAR STEP
1987-1991 RV(03-42) BUMPER/REAR STEP

1.	7.831	**BAR**, REAR BUMPER IMPACT (CHROME)	14043836
	7.831	**BAR**, RR BPR IMP (PAINTED)(W/STEPSIDE E62)(1985-87)	14043837
	7.831	**BAR**, RR BPR IMP (PAINTED)(W/FLEETSIDE E63)	14043838
2.	8.931	**WASHER**, SPRING LOCK (.50X.87 ZOR)	9439514
3.	8.917	**NUT**, HEX LOCK (1/2-13 301M CAD)	9422301
4.	8.903	**BOLT**, ROUND HEAD SQUARE SHANK (1/2-13X2)	340734
5.	8.929	**WASHER**, PLAIN (.531 CZ)	120396
6.	7.831	**REINFORCEMENT**, REAR BUMPER INNER BRACE-LH	14014797
	7.831	**REINFORCEMENT**, REAR BUMPER INNER BRACE-RH	14014798
7.	7.836	**BRACE**, REAR BUMPER OUTER-LH	14014799
	7.836	**BRACE**, REAR BUMPER OUTER-RH	14014800
8.	7.831	**NUT**, REAR BUMPER IMPACT BAR (1/2-13X.44,1.03 PX)	9442090
9.	8.900	**BOLT**, SPL (1/2-13X1.50 PC)	9422332
10.	7.836	**BRACE**, REAR BUMPER INNER-LH	14014793
	7.836	**BRACE**, REAR BUMPER INNER-RH	14014794

© 1990 GENERAL MOTORS SERVICE PARTS OPERATIONS—LIGHT TRUCK 52R

TZR07-04
070590

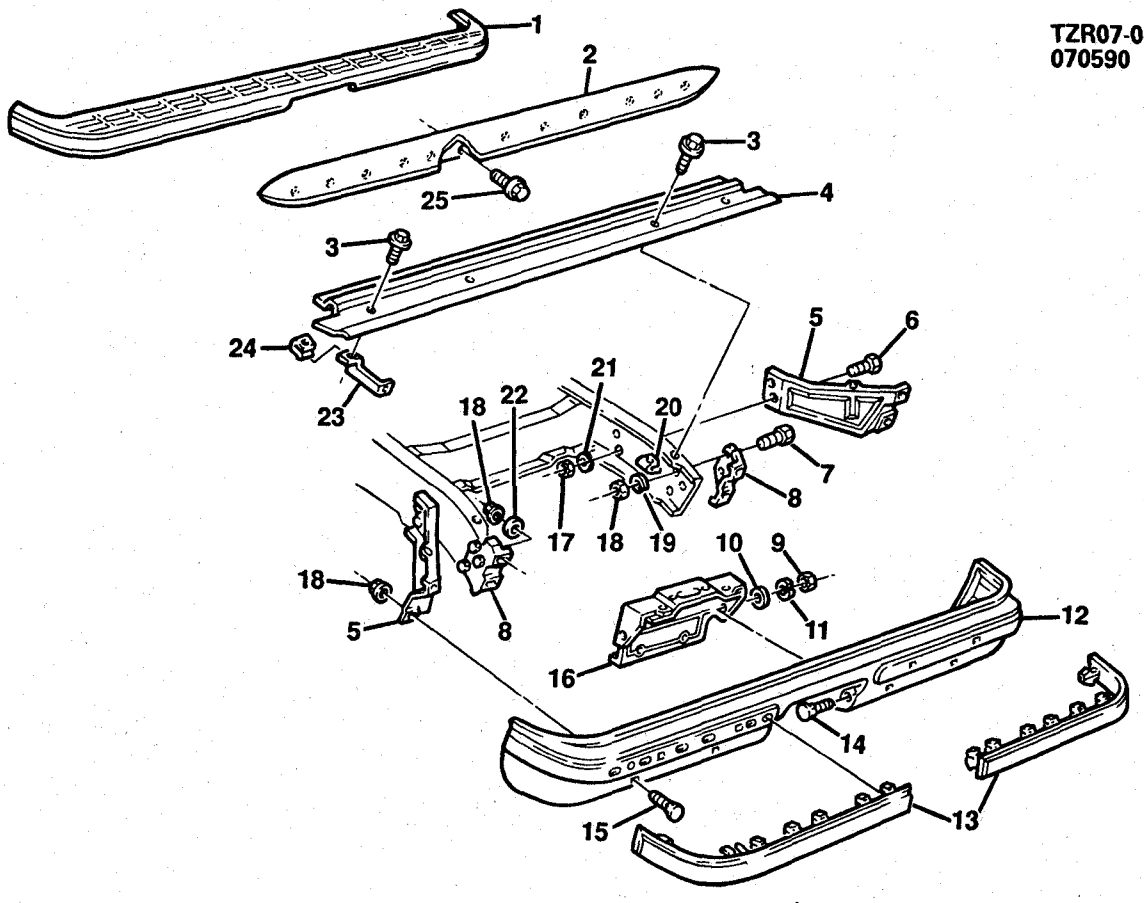

TZR07-04

1985-1986 CK(06-16) BUMPER/REAR
1987-1991 RV(06-16) BUMPER/REAR

1.	7.831	**STRIP**, RR BPR RUB (RV 06)(W/VG5)(1989-91)	15571637
2.	7.833	**SHIELD**, PROTECTIVE (CK/RV 06)	14022883
	7.833	**FILLER**, RR BPR (CK/RV 06)(1989-91)	15610507
3.	8.900	**SCREW**, HEX W/CON WA (5/16-18X7/8)	473892
4.	7.833	**DEFLECTOR**, GRAVEL (K/R 16)(1985-88)	329138
	7.833	**FILLER**, RR BPR	15614122
5.	7.836	**BRACE**, BAR OUTER-LH	14067783
	7.836	**BRACE**, BAR OUTER-RH	14067784
6.	8.900	**BOLT**, HEX (7/16-14X1 1/4)	9424069
7.	8.900	**BOLT**, HEX (1/2-13X1.25, 300M)	9425082
8.	7.836	**BRACE**, BAR INNER-LH (K/V 16)	14021357
	7.836	**BRACE**, BAR INNER-RH (K/V 16)	14021358
	7.836	**BRACE**, BAR INNER-LH (CK/RV 06)	14021359
	7.836	**BRACE**, BAR INNER-RH (CK/RV 06)	14021360
9.	8.915	**NUT**, HEX (3/8X16X21/64, 301 ZN)	9414034
10.	8.929	**WASHER**, FLAT (15/32X15/16X1/16, ZP)	120395
11.	8.931	**WASHER**, SPR LK (3/8X11/16, ZOR)	9439512
12.	7.831	**BAR**, BUMPER (CHROME)(EXC STRIP)	14021280
	7.831	**BAR**, BUMPER (CHROME)(W/STRIP)	14026495
	7.831	**BAR**, BUMPER (W/RR STRIP IMP BPR VG5)(1989-91)	15628731
13.	7.831	**STRIP**, OUTER-LH	14026499

© 1990 GENERAL MOTORS SERVICE PARTS OPERATIONS—LIGHT TRUCK 52R

13.	7.831	**STRIP**, OUTER-RH	14026500
14.	8.903	**BOLT**, RD HD SQ NK (3/8-16X1)	9433489
15.	8.903	**BOLT**, RD HD SQ NK (.500-13X2)(*1)	340734
	7.831	**BOLT**, IMP BAR (1/2-13X1)(*2)	9442091
16.	7.800	**BRACKET**, REAR LIC PLT	14043845
17.	8.915	**NUT**, HEX (1/2-13, CZ)	9414511
18.	8.915	**NUT**, HEX (1/2-13X.44)	9442090
19.	8.931	**WASHER**, SPR LK (.50X.87, ZOR)	9439514
20.	8.915	**NUT**, HFH (5/16-18X.20, 286M)	1359887
	8.932	**WASHER**, EXT TTH LK (.375, CAD OR ZC)	138489
21.	8.931	**WASHER**, SPR LK (3/8X11/16, ZOR)	9439512
22.	8.929	**WASHER**, PLAIN (.531, CZ)	120396
23.	7.833	**BRACKET**, GVL DFL-LH (K/V1 16)	337707
	7.833	**BRACKET**, GVL DFL-RH (K/V1 16)	337708
24.	8.921	**NUT**, "U" (5/16-18)	10008002
25.	8.977	**SCREW**, HEX W/FLAT WA (M6.3X1.81X16, PZOR)	11509371

NOTE 1: USED IN ALL POSITIONS EXCEPT UNDER IMPACT STRIP, ON BUMPERS SO EQUIPPED.
NOTE 2: USED UNDER IMPACT STRIP ON BUMPERS SO EQUIPPED.

© 1990 GENERAL MOTORS SERVICE PARTS OPERATIONS—LIGHT TRUCK 52R

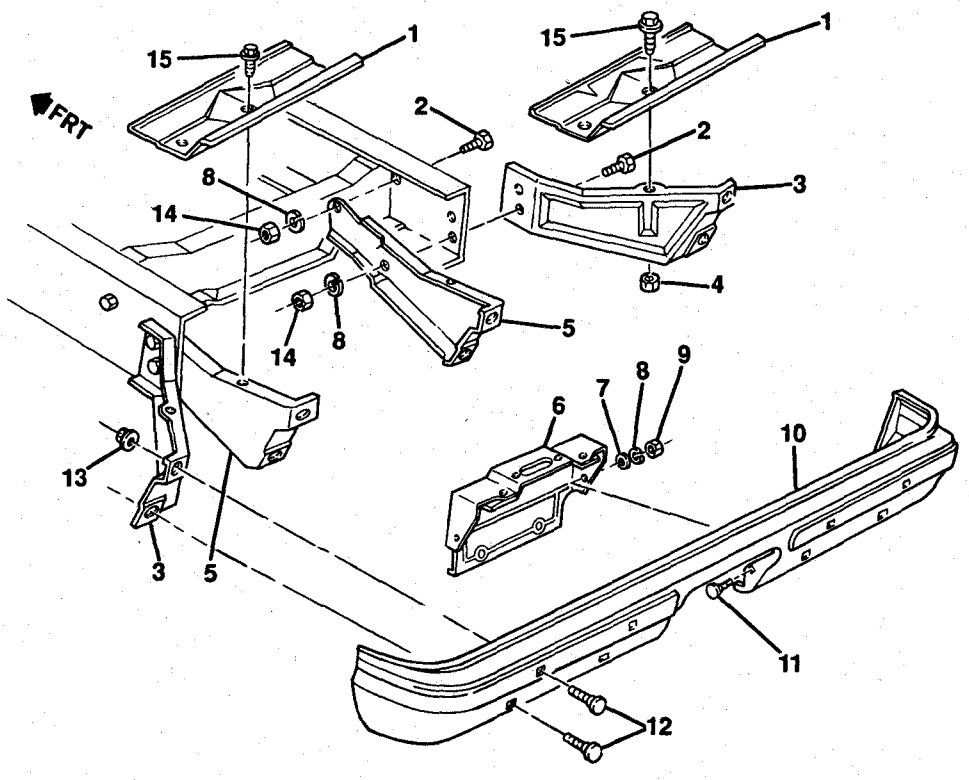

TZR07-01

1989-1991 RV(03-43) BUMPER/REAR

1.	7.833	**DEFLECTOR**, REAR BUMPER GRAVEL(*1)	325465
2.	8.900	**BOLT**, SPL (1/2-13 X 1.50 300M PC)	9422332
3.	7.836	**BRACE**, REAR BUMPER IMPACT BAR OUTER-LH	14067783
	7.836	**BRACE**, REAR BUMPER IMPACT BAR OUTER-RH	14067784
4.	8.917	**NUT**, HFH (5/16-18X.20 286M PC)	1359887
5.	7.836	**BRACE**, REAR BUMPER IMPACT BAR INNER-LH	14021341
	7.836	**BRACE**, REAR BUMPER IMPACT BAR INNER-RH	14021342
6.	7.800	**PANEL**, REAR LICENSE PLATE	14043845
7.	8.929	**WASHER**, FLAT (15/32X15/16X1/16 ZP)	120395
8.	8.931	**WASHER**, SPRING LOCK (.50X.87 ZOR)	9439514
9.	8.915	**NUT**, HEX (.375-16X21/64 301M ZC)	9414034
10.	7.831	**BAR**, REAR BUMPER IMPACT	14049997
11.	8.903	**BOLT**, ROUNDHEAD SQUARE SHANK (3/8-16X1 ZP)	9433489
12.	8.903	**BOLT**, ROUND HEAD SQUARE SHANK (1/2-13X2 ZP)	340734
13.	7.831	**NUT**, REAR BUMPER IMPACT BAR (1/2-13X.44,1.03 PX)	9442090
14.	8.915	**NUT**, HEX (1/2-13 CZ)	9414511
15.	8.900	**SCREW**, HEX W/CON WASHER (5/16-18X7/8 PO)	473892

NOTE 1: THESE PARTS ARE ACTUALLY LEFT HAND PARTS BUT CAN BE USED FOR RIGHT HAND APPLICATION BY DRILLING NECESSARY HOLES.

© 1990 GENERAL MOTORS SERVICE PARTS OPERATIONS—LIGHT TRUCK 52R

GROUP 8.000

ILLUSTRATION INDEX

	TITLE	PAGE
1987-1991	RV SHEET METAL/FRONT END	8-3
1985-1986	CK(06) HEATER SYSTEM/REAR AUXILIARY	8-7
1987-1991	RV(06) HEATER SYSTEM/REAR AUXILIARY (INCLUDES HEATER ASSEMBLY DETAILS)	8-7
1985-1986	CK HEATER & BLOWER ASM	8-8
1987-1991	RV HEATER & BLOWER ASM	8-8
1988-1991	RV HEATER ASM REAR AUXILIARY)(C36	8-10
1988	RV HOSES & PIPES/HEATER & RELATED PARTS	8-13
1985-1986	CK HEATER CONTROL ASM	8-14
1987-1991	RV HEATER CONTROL ASM	8-14

© 1990 GENERAL MOTORS SERVICE PARTS OPERATIONS—LIGHT TRUCK 52R

NOTES

BLANK PAGE

© 1990 GENERAL MOTORS SERVICE PARTS OPERATIONS—LIGHT TRUCK 52R

TZR08-01
062690

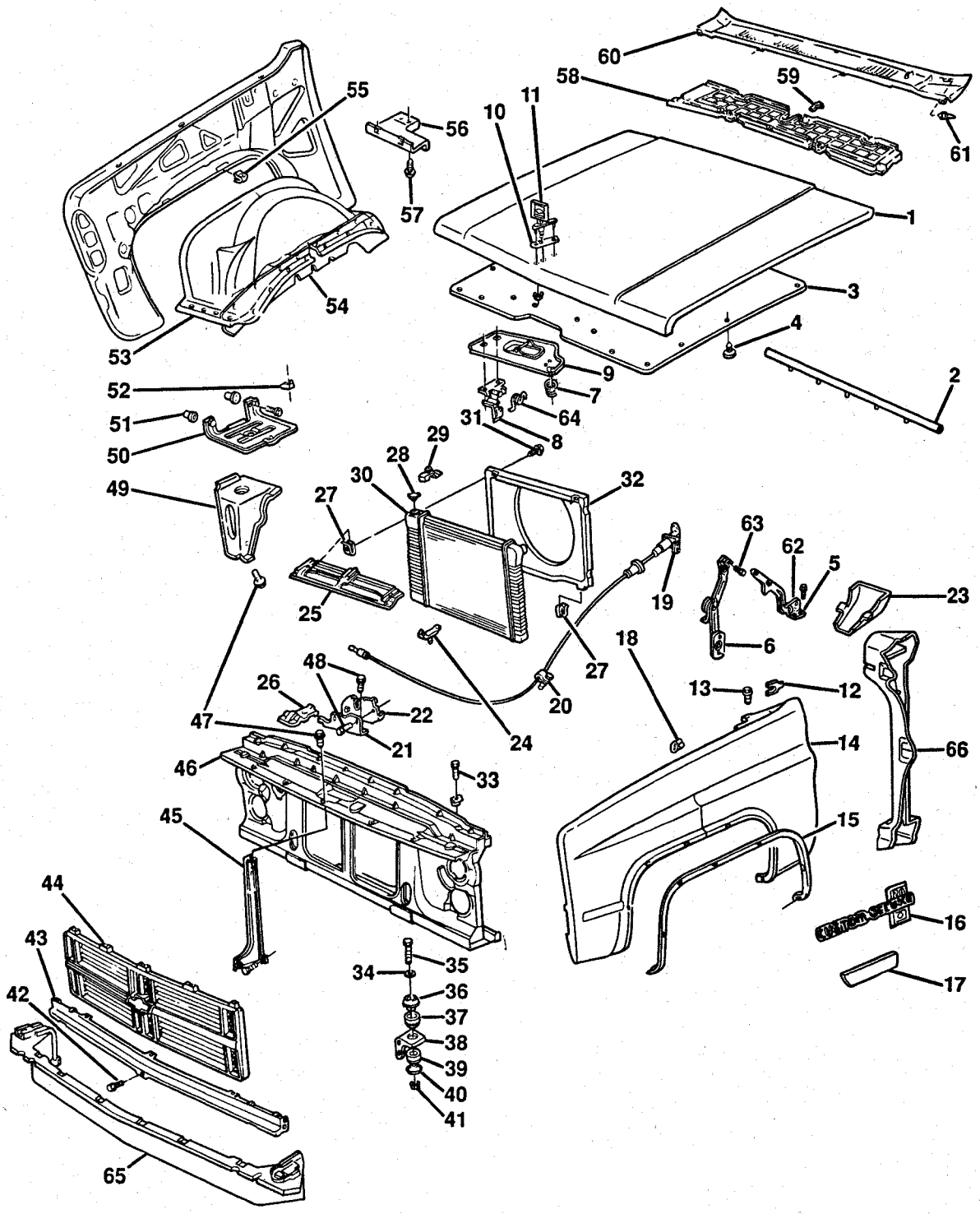

TZR08-01

© 1990 GENERAL MOTORS SERVICE PARTS OPERATIONS—LIGHT TRUCK 52R

1987-1991 RV SHEET METAL/FRONT END

NOTE: QUANTITY IS ONE PER ASSEMBLY UNLESS OTHERWISE SPECIFIED.

1.	8.000	**HOOD** (1985-90)	15571640
	8.000	**HOOD** (1991)	15629509
2.	8.010	**SEAL**, HOOD RR	14018523
3.	8.021	**INSULATOR**, HOOD PNL (57X.50X70)	12306178
	8.021	**INSULATOR**, HOOD (DIESEL)(1991)	15641298
	8.021	**INSULATOR**, HOOD (LL4)(10500 GVW)	15641299
4.	8.950	**RETAINER**, PUSH-IN (.35X.25)	3977775
5.	8.015	**HINGE**, HOOD-LH	14043823
	8.015	**HINGE**, HOOD-RH	14043824
6.	8.013	**SPRING**, HOOD OPEN ASST-LH	14021253
	8.013	**SPRING**, HOOD OPEN ASST-RH	14021254
7.	8.083	**SPRING**, HOOD POP-UP	14018532
8.	8.080	**CATCH**, HOOD LATCH SEC (INCL #64)	14018526
9.	N.S.	**REINFORCEMENT**, HOOD LATCH (PART OF #1)	
10.	8.055	**SEAL**, HOOD ORNA	12337877
11.	8.055	**ORNAMENT**, HOOD (CHEV)	14032781
	8.055	**ORNAMENT**, HOOD (GMC)	14032782
	8.055	**ORNAMENT**, HOOD (DIESEL)	14039999
12.	8.143	**SHIM**, FENDER (8.016)(AS REQD)	345819
13.	8.900	**BOLT**, HEX W/CON WA (3/8-16X1 3/8 275M)(AS REQD)	15641800
14.	8.130	**FENDER**, FRT-LH	15614467
	8.130	**FENDER**, FRT-RH (1985-87)	15615335
	8.130	**FENDER**, FRT-RH (1988-90)	15571642
	8.130	**FENDER**, FRT-RH (1991)	15614468
15.	8.132	**MOLDING**, FENDER WHL OPG-LH (BRIGHT)(W/B96)	14022805
	8.132	**MOLDING**, FENDER WHL OPG-RH (BRIGHT)(W/B96)	14022806
	8.132	**MOLDING KIT**, FENDER WHL HSG-LH (06-16)(W/B96)(1989-91)(WHL OPG MLDG(B96))	15616313
	8.132	**MOLDING**, FENDER WHL OPG-RH (06-16)(W/B96)(1989-91)	15616312
16.	8.147	**PLATE**, FENDER NAME (BLAZER)(1985-88)	14051844
	8.147	**PLATE**, FENDER NAME (6.2 LITRE DIESEL)	14043697
	8.147	**PLATE**, FENDER NAME (CUSTOM DELUXE)((CHEV))	14051846
	8.147	**PLATE**, FENDER NAME (CUSTOM DELUXE)(W/PLASTIC GSKT)((CHEV))	14051847
	8.147	**PLATE**, FENDER NAME (SCOTTSDALE)((CHEV))	14051848
	8.147	**PLATE**, FENDER NAME (SCOTTSDALE 20)((CHEV))	14051849
	8.147	**PLATE**, FENDER NAME (SCOTTSDALE)((CHEV))	14051850
	8.147	**PLATE**, FENDER NAME (SILVERADO)((CHEV))	14051851
	8.147	**PLATE**, FENDER NAME (SILVERADO)((CHEV))	14051852
	8.147	**PLATE**, FENDER NAME (SILVERADO)((CHEV))	14051853
	8.147	**PLATE**, FENDER NAME (JIMMY)((GMC))	14051854
	8.147	**PLATE**, FENDER NAME (SIERRA 2500)((GMC))	14051856
	8.147	**PLATE**, FENDER NAME (SIERRA 3500)((GMC))	14051857
	8.147	**PLATE**, FENDER NAME (HIGH SIERRA 1500)((GMC))	14051858
	8.147	**PLATE**, FENDER NAME (HIGH SIERRA 2500)((GMC))	14051859
	8.147	**PLATE**, FENDER NAME (HIGH SIERRA 3500)((GMC))	14051860
	8.147	**PLATE**, FENDER NAME (SIERRA CLASSIC 1500)((GMC))	14051861
	8.147	**PLATE**, FENDER NAME (SIERRA CLASSIC 2500)((GMC))	14051862
	8.147	**PLATE**, FENDER NAME (SIERRA CLASSIC 3500)((GMC))	14051863
17.	8.132	**MOLDING**, FDR SI LWR RR-LH (BLACK)(W/B84,B88)(1985-88)	15596905
	8.132	**MOLDING**, FDR SI LWR RR-RH (BLACK)(W/B84,B88)(1985-88)	15596906
	8.132	**MOLDING**, FDR SI LWR RR-LH (BRIGHT)(W/B85)	15596907
	8.132	**MOLDING**, FDR SI LWR RR-RH (BRIGHT)(W/B85)	15596908
	8.132	**MOLDING**, FDR LWR RR-LH (W/B85)(1989-91)	15628787
	8.132	**MOLDING**, FDR LWR RR-RH (W/B85)(1989-91)	15628788
18.	8.024	**BUMPER**, HOOD PNL SI(4 REQD)	12337985
19.	8.075	**CABLE**, HOOD LAT	14039963
20.	8.965	**RETAINER**, ADJ PLASTIC (7 INCH)	3816659
21.	8.080	**BRACKET**, HOOD LAT	14018531
22.	8.080	**LATCH**, HOOD PRIM (CONSIST OF)	14070703
	8.077	**RETAINER**, HOOD LAT CBL	20051384
	N.S.	**NUT**, HFH (M8X1.25X7.5, 10 PEOR)(AS REQD)	
23.	8.015	**DEFLECTOR**, HOOD HGE WAT-LH	15569091
	8.015	**DEFLECTOR**, HOOD HGE WAT-RH	
24.	1.270	**INSULATOR**, RAD MT LWR (51.82MM)(2 REQD)	14018584
	1.270	**INSULATOR**, RAD MT (78.3 MM)(2 REQD)	6264100
	1.270	**INSULATOR**, RAD MT (49.78 MM)(4 REQD)	14018568
	1.270	**INSULATOR**, RAD MT LWR (51.82 MM)(1987-89)((292T)(EXC C60))	14032841
25.	1.270	**PANEL**, RAD MT UPR	
	1.270	**PANEL**, RAD MT UPR (LH6,LL4,L19)	14039948
	1.270	**PANEL**, RAD MT UPR (L19,454W)(1987-88)	14018600
26.	1.277	**BRACKET**, RAD FAN SHRD-LH	

© 1990 GENERAL MOTORS SERVICE PARTS OPERATIONS—LIGHT TRUCK 52R

26.	1.270	**BRACKET**, RAD UPR MTG-LH	14018579
	1.270	**BRACKET**, RAD UPR MTG-RH	14018580
	1.270	**BRACKET**, RAD UPR MTG-RH (1988-91)	14063152
27.	8.921	**NUT**, U-SHAPE (1/4-20, ZP)(AS REQD)	3982098
28.	1.203	**CAP**, RAD FILLER	6410785
29.	1.270	**INSULATOR**, RAD MT UPR (SEE CATALOG)	
30.	1.219	**RADIATOR** (SEE CATALOG)	
31.	8.900	**BOLT**, HEX W/FL WA (1/4-20X1, 275M CAD)(AS REQD)	9440334
32.	1.277	**SHROUD**, RAD FAN (SEE CATALOG)	
33.	8.024	**BUMPER**, HOOD ADJ FRT	472450
34.	1.270	**WASHER**, RAD SUPT (2 REQD)	14049809
35.	8.900	**BOLT**, HEX (1/2-13X5, 300M ZOR)(AS REQD)	9439584
36.	N.S.	**SPACER**, RAD SUPT UPR CUSH (PART OF #37)	
37.	1.270	**CUSHION**, RAD SUPT UPR (INCL #36)	15597600
38.	1.274	**BRACKET**, RAD SUPT (C/R MODELS)(2 REQD)	14024565
	1.274	**BRACKET**, RAD SUPT (K/V MODELS)(2 REQD)	14029193
39.	1.270	**CUSHION**, RAD SUPT LWR (9.023)(2 REQD)	15597629
40.	1.270	**RETAINER**, RAD SUPT CUSH (9.011)(AS REQD)	14027472
41.	8.915	**NUT**, HEX (1/2-13, 301M)(AS REQD)	9414511
42.	8.080	**SCREW**, HEX W/CON WA (5/16-18X7/8, 275 PHOS)(AS REQD)	473892
43.	1.263	**PANEL**, F/END (1987-88)	14043880
	1.263	**PANEL**, F/END (1989-91)	15641829
44.	1.266	**GRILLE**, RAD (SEE CATALOG)	
45.	1.263	**SUPPORT**, F/END SHEET MET	15606524
46.	1.270	**SUPPORT**, RAD (COMPLETE)(W/CHR GRL)(1985-88)	15606586
	1.270	**SUPPORT**, RAD (W/CHR GRL)(1989-91)	15628620
	1.270	**SUPPORT**, RAD (COMPLETE)(EXC CHR GRL)(1985-88)	15606587
	1.270	**SUPPORT**, RAD (EXC CHR GRL)(1989-91)	15628622
47.	8.900	**BOLT**, HEX LG FL WA (5/16-18X7/8, 275 POR)(AS REQD)	
48.	8.080	**BOLT**, HOOD PRIM LAT (8.900)(2 REQD)	11508017
49.	N.S.	**SUPPORT**, BAT TRAY (PART OF #50)	
50.	2.333	**TRAY**, W/SUPT, BAT-RH	15616326
	2.333	**TRAY**, BAT W/SUPT-LH (INCL #49)	15594129
	2.333	**SUPPORT**, BAT TRAY-LH (W/DIESEL)	15616249
51.	2.334	**NUT**, BATTERY TRAY (3.704)(2 REQD)	3792287
52.	2.335	**RETAINER**, BAT HOLDN (AS REQD)	14005061
53.	8.153	**PANEL**, FRT WHL HSE-LH	15594889
	8.153	**PANEL**, FRT WHL HSE-RH	15594890
54.	8.153	**SHIELD**, FRT W/H-LH (C/R)	14027793
	8.153	**SHIELD**, FRT W/H-RH (C/R)	14027794
	8.153	**SHIELD**, FRT W/H-LH (K/V)	14027795
	8.153	**SHIELD**, FRT W/H-RH (K/V)	14027796
	8.153	**SHIELD**, FRT W/H-RH (K/V)(W/FRT QUAD SHKS)	14032786
55.	8.921	**NUT**, U-SHAPE (5/16-18)(AS REQD)	
56.	8.153	**SHIELD**, FRT W/H PNL SPLASH LOWER REAR-LH	14027645
	8.153	**SHIELD**, FRT W/H PNL SPLASH-RH	14027646
57.	16.165	**RETAINER**, PNL HOLE (12.801)(AS REQD)	480534
58.	16.125	**SCREEN**, AIR INLET W/S FRM & PLENUM PNL	15598709
59.	16.125	**RETAINER**, AIR INL SCREEN (2 REQD)	14027555
60.	16.125	**PANEL**, AIR INL GRL	15598708
61.	16.125	**RETAINER**, AIR INLET GRL PANEL (3 REQD)	15598769
	16.125	**RETAINER**, AIR INLET GRL PANEL OUTER (2 REQD)	15598770
62.	8.016	**BOLT**, HEX W/CON WA (3/8-16X1.125)(3.015)(AS REQD)	6271980
63.	8.080	**SCREW**, HEX W/CON WA (5/16-18X7/8)(AS REQD)	473892
64.	8.083	**SPRING**, HOOD LATCH SEC CATCH	14018529
65.	1.272	**DEFLECTOR**, FRT AIR (C/R)	15569084
	1.272	**DEFLECTOR**, FRT AIR (K/V)(EXC V76)	15569086
	1.272	**DEFLECTOR**, FRT AIR (W/V76)(1987-91)	15569088
66.	16.507	**INSULATOR**, F/FDR-LH	14022831
	16.507	**INSULATOR**, F/FDR-RH	14022832

RPO DEFINITIONS
B84-BLACK BODY SIDE MOLDING.
B85-BRIGHT BODY SIDE MOLDING W/DUAL CHROME ACCENT.
B88-ORNAMATATION,EXTERIOR,BODT SIDE MOLDING(CUSTOM)(BODY COLOR)
B96-ORNAMATATION,EXTERIOR,WHEEL OPENING MOLDING(BRIGHT)

© 1990 GENERAL MOTORS SERVICE PARTS OPERATIONS—LIGHT TRUCK 52R

NOTES

BLANK PAGE

TA08-016
050687

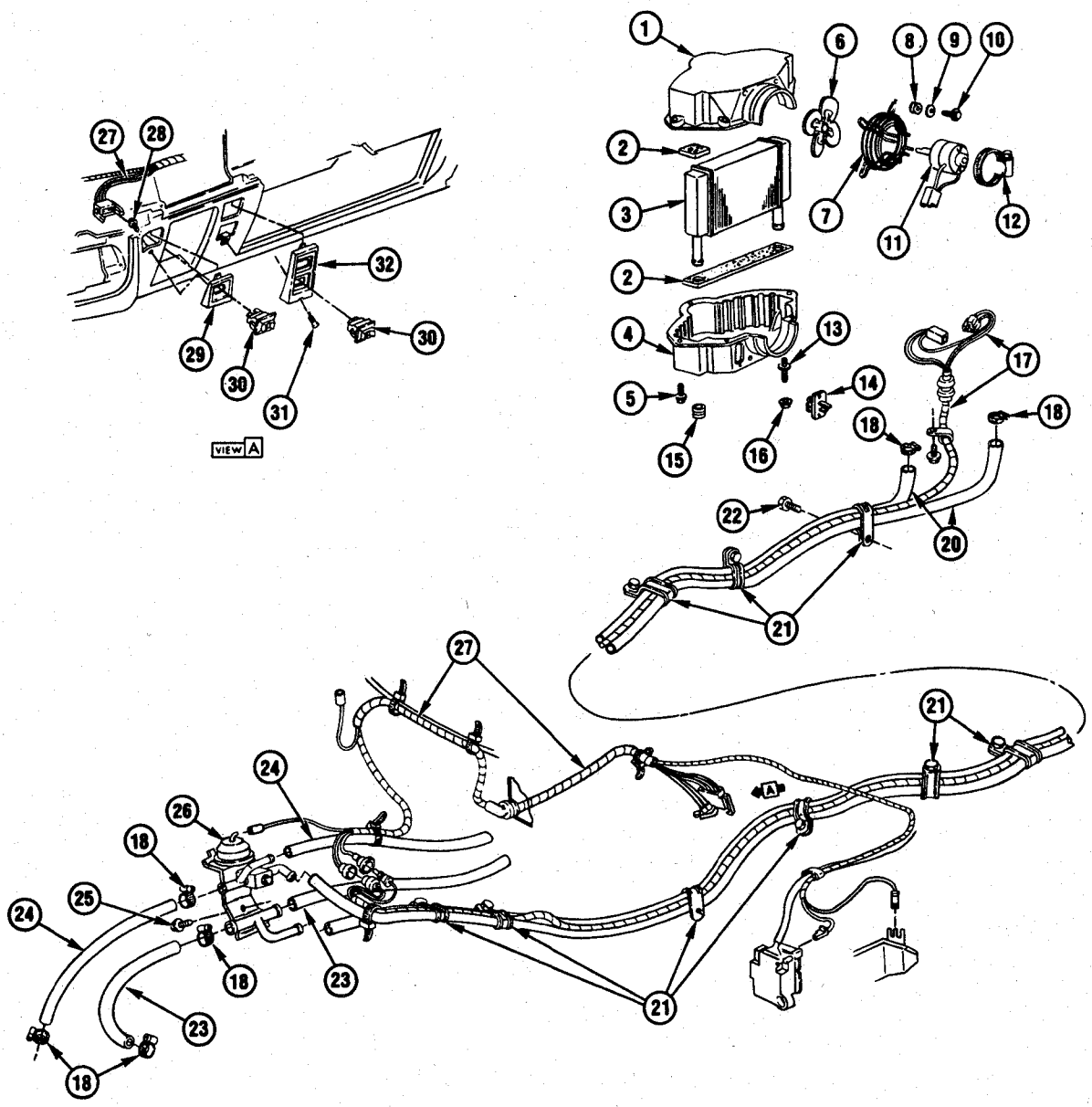

TA08-016

© 1990 GENERAL MOTORS SERVICE PARTS OPERATIONS—LIGHT TRUCK 52R

1985-1986 CK(06) HEATER SYSTEM/REAR AUXILIARY
1987-1991 RV(06) HEATER SYSTEM/REAR AUXILIARY (INCLUDES HEATER ASSEMBLY DETAILS)

1.	8.854	**CASE**, UPPER	3034755
2.	9.260	**SEAL**, POLYURETHANE (59 1/2"X1 1/4"X3/4")	3999572
3.	8.854	**CORE**, AUXILIARY HEATER	3034749
4.	8.854	**CASE**, LOWER	3034754
5.	8.977	**SCREW**, HEX WA HD TAP (#10-16X5/8")	
6.	8.857	**FAN**, AUXILIARY HEATER	3007341
7.	8.856	**SUPPORT**, W/GUARD, MOTOR	3145757
8.	8.845	**GROMMET**, GUARD MOUNT	3141610
9.	8.929	**WASHER**, FLAT (5/16"IDX3/4"ODX1/16"THK)	
10.	8.977	**SCREW**, HEX WA HD (1/4"-14X1 1/8")	
11.	8.855	**MOTOR**, BLOWER	22020891
12.	8.948	**CLAMP**, WORM GEAR (65.1 TO 89.9, BLK OX)	14081883
13.	N.S.	**STUD** (1/4"-20)	
14.	8.855	**RESISTOR**, BLOWER MOTOR	3929052
15.	8.845	**SEAL**, AUXILIARY HEATER	3035049
16.	8.917	**NUT**, W/WASHER (1/4-20)	14051876
17.	8.852	**HARNESS**, REAR WIRING	12026216
18.	8.948	**CLAMP**, WORM GEAR (.62 TO 1.25)(1985-86)	12337891
	1.166	**CLAMP**, THERM BY-PASS HOSE (8.948)(1987-91)	22537533
20.	8.846	**PIPE**, AUXILIARY HEATER INLET & OUTLET FRONT	15530584
21.	8.950	**CLIP**, SPL (1" TUBE DIA 5/16" HOLE)	3825416
22.	8.977	**SCREW**, HEX WA HD TAP (M8X1.25X20)	11508534
23.	8.962	**HOSE**, WATER HEATER OUTLET (BULK)(3/4)	12322343
24.	8.962	**HOSE**, WATER HEATER INLET (BULK)(5/8)	12322342
25.	8.977	**SCREW**, HEX TAP W/FL WA (M6.3X1.81X16) PO	11509371
26.	8.866	**VALVE**, AUXILIARY HEATER WATER SHUTOFF	15545676
27.	8.852	**HARNESS**, AUXILIARY HEATER FRONT WIRING	12041592
28.	8.977	**SCREW**, HWH TAP (M4.2X1.41X16) PZOR	11509135
29.	8.849	**BEZEL**, AUXILIARY HEATER SWITCH (SINGLE FUNCTION)	14040894
30.	8.852	**SWITCH**, AUXILIARY HEATER CONTROL	14040841
	9.275	**SWITCH**, AUXILIARY A/C CONTROL (W/C69)	14040842
31.	8.977	**SCREW**, PAN HD C/R TAP (M4.2X1.41X35)	11509374
32.	8.849	**BEZEL**, AUXILIARY HEATER/A/C CONTROL SWITCH (DUAL FUNCTION)	14040839

RPO DEFINITIONS
C69 - HVAC SYSTEM, AIR CONDITIONER ROOF MOUNTED

© 1990 GENERAL MOTORS SERVICE PARTS OPERATIONS—LIGHT TRUCK 52R

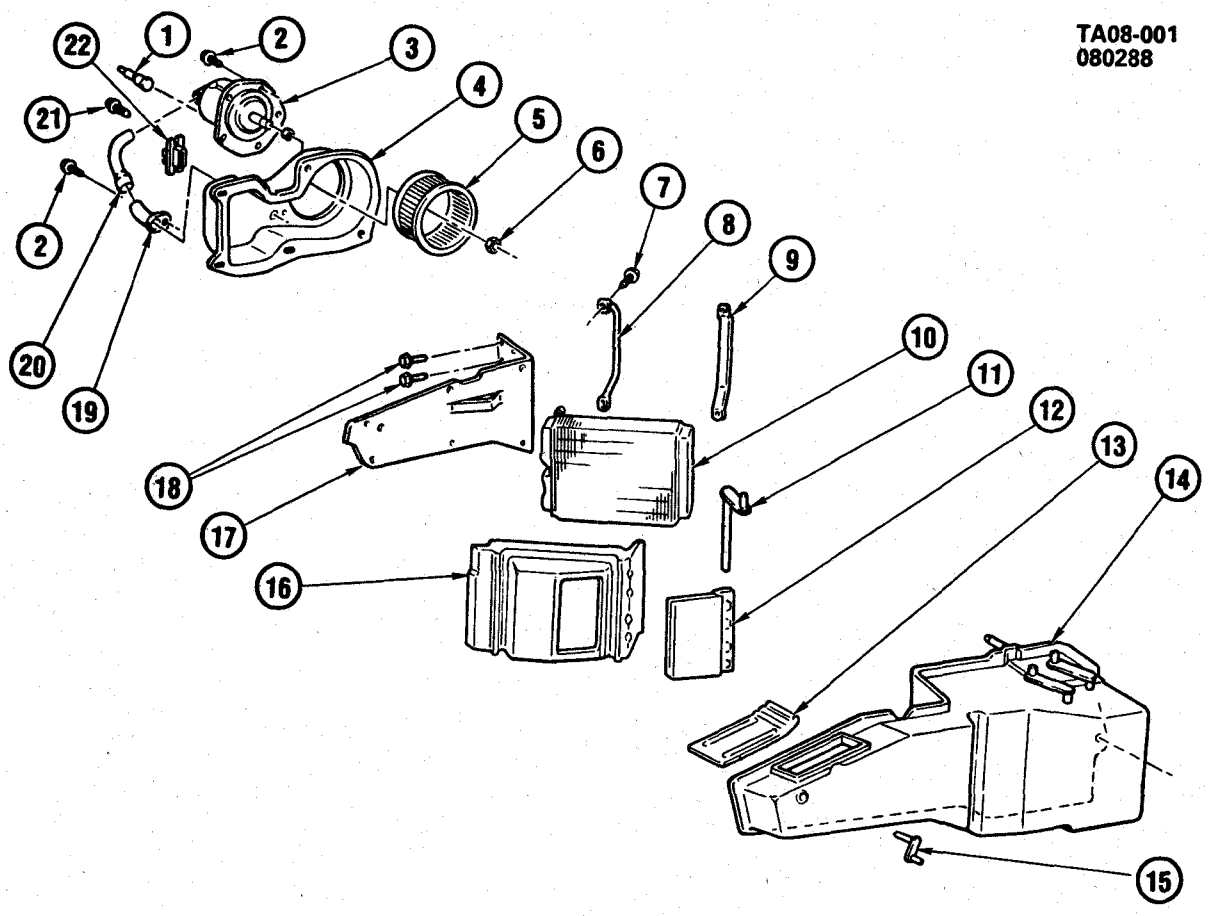

1985-1986 CK HEATER & BLOWER ASM
1987-1991 RV HEATER & BLOWER ASM

NOTE: FOR INFORMATION ON SERVICEABLE COMPONENTS TO HEATER WITH AIR CONDITIONING, SEE ILLUSTRATION IN GROUP 9.000 ENTITLED; A.C. HEATER ASM.

1.	8.965	**CONNECTOR**, ELECTRICAL	
2.	8.977	**SCREW**, HEX WA HD TAP (M4.2X1.41X13)	3042017
3.	9.215	**MOTOR**, BLOWER (W/C42)	22020945
	8.855	**MOTOR**, BLOWER (W/C41)	22048573
4.	8.857	**CASE**, HEATER BLOWER (W/C42)	3029730
	8.857	**CASE**, HEATER BLOWER (W/C41)	3027319
5.	8.857	**FAN**, BLOWER (W/C42)(INCL #6)	3094154
	8.857	**FAN**, BLOWER (W/C41)(INCL #6)	3094157
6.	N.S.	**NUT**, (PART OF #5)	
7.	N.S.	**BOLT**,	
8.	8.854	**CLAMP**, CORE MOUNT (HEADER TANK)	3025501
9.	8.854	**CLAMP**, CORE MOUNT (IN-OUT TANK)	3024673
10.	8.854	**CORE**, W/FITTING, HEATER	3027247
11.	9.786	**SHAFT**, W/LEVER, TEMPERATURE VALVE	3030075
12.	9.786	**VALVE**, W/SEAL, TEMPERATURE(PART OF #14)	3024867
13.	9.779	**VALVE**, DEFROST(PART OF #14)	3027308
14.	8.854	**CASE**, HEATER	3054315
	8.854	**CASE**, HEATER (INCL #12 THRU 15)	3054315
15.	9.779	**SHAFT**, W/LEVER, DEFROST VALVE(PART OF #14)	3030072
16.	8.854	**SHROUD**, W/VALVE SEAT, HEATER CORE	3048083
17.	8.852	**PLATE**, FRONT	3048067
18.	N.S.	**BOLT**, FRONT PLATE	
19.	8.859	**ELBOW**, MOTOR COOLING TUBE	3013475
20.	8.859	**TUBE**, MOTOR COOLING	3036927
21.	8.977	**BOLT**, HWH TAP (M4.2X1.41X16, POR)	11513932
22.	8.855	**RESISTOR**, BLOWER MOTOR (9.275)	500890

© 1990 GENERAL MOTORS SERVICE PARTS OPERATIONS—LIGHT TRUCK 52R

RPO DEFINITIONS
C41 - HVAC SYSTEM, HEATER OUTSIDE AIR, WITH FAN
C42 - HEATER, DELUXE OUTSIDE AIR

© 1990 GENERAL MOTORS SERVICE PARTS OPERATIONS—LIGHT TRUCK 52R

TR08-017
052590

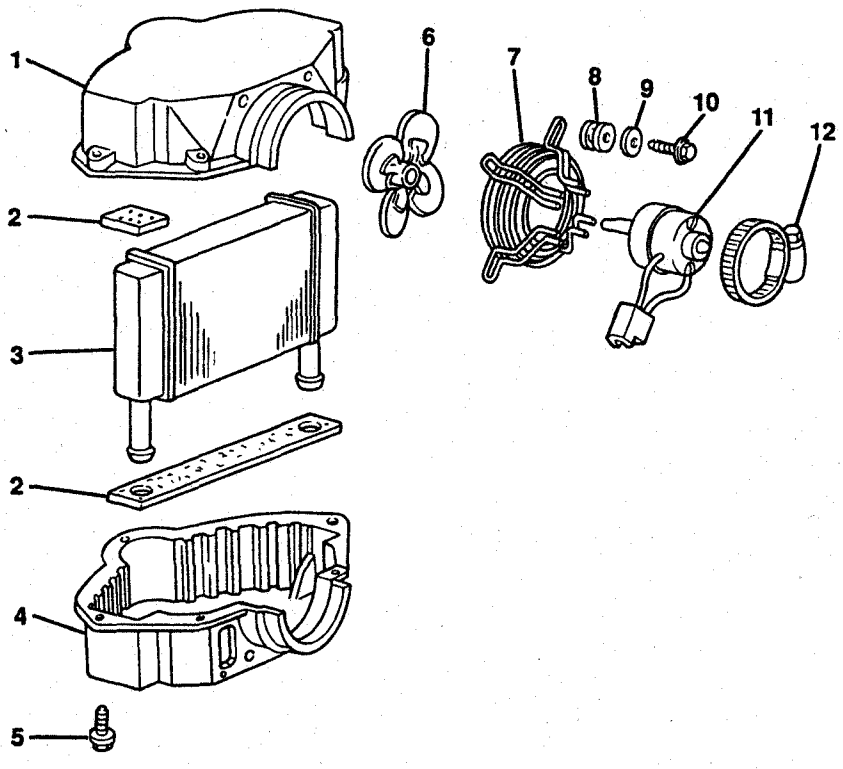

TR08-017

1988-1991 RV HEATER ASM REAR AUXILIARY)(C36

1.	8.854	CASE , UPPER	3034755
2.	9.260	SEAL , POLYURETHANE(59.50 X 1.25 X .75)	3999572
3.	8.854	CORE , AUXILIARY HEATER	3034749
4.	8.854	CASE , LOWER	3034754
5.	N.S.	SCREW , HEX WA HEAD TAP (#10-16X5/8")	
6.	8.857	FAN , AUXILIARY HEATER	3007341
7.	8.856	SUPPORT , W/GUARD, AUXILIARY HEATER MOTOR	3145757
8.	8.845	GROMMET , AUXILIARY HEATER GUARD MOUNTING	3141610
9.	N.S.	WASHER , FLAT (5/16"IDX3/4"ODX1/16"THK)	
10.	N.S.	SCREW , HEX WA HEAD (1/4"-14X1 1/8")	
11.	8.855	MOTOR , AUXILIARY HEATER BLOWER	22020891
12.	8.948	CLAMP , WORMGEAR,65.1-89.9 BLK OX	14081883

© 1990 GENERAL MOTORS SERVICE PARTS OPERATIONS—LIGHT TRUCK 52R

NOTES

BLANK PAGE

TX08-019
032188

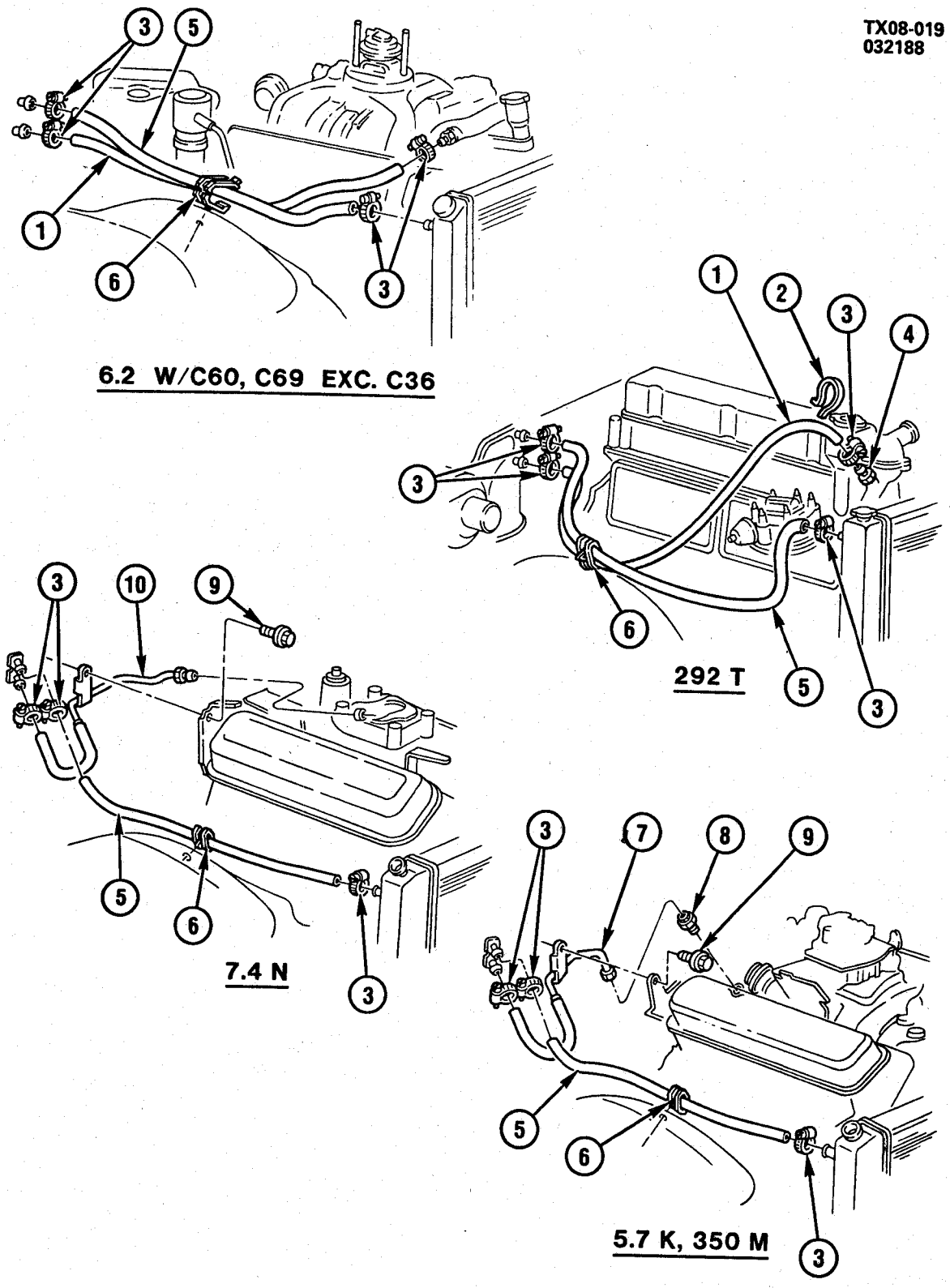

TX08-019

© 1990 GENERAL MOTORS SERVICE PARTS OPERATIONS—LIGHT TRUCK 52R

1988 RV HOSES & PIPES/HEATER & RELATED PARTS

1.	8.962	**HOSE**, (5/8 IDX25 FT.)(RUBBER)	495692
2.	8.965	**STRAP**, ADJ TIE (5.00MM WIDE,345MM WORKING LGTH)	11509088
3.	8.948	**CLAMP**, WORM GEAR (15.7 TO 31.8)	22537533
4.	8.866	**NIPPLE**, THERM BY-PASS	354501
5.	8.962	**HOSE**, (5/8 IDX25 FT)(GM6140)	12322342
6.	8.950	**CLIP**, SPL (3.12X.94X1.06)	3825416
7.	8.846	**HOSE**, HTR INL (EXC A.C.)	15554920
	8.846	**HOSE**, HTR INL (W/A.C.)	15554921
8.	8.866	**FITTING**, HTR HOSE	15601871
10.	8.846	**PIPE**, HRT INL W/HOSE (EXC A.C.)	15565039
	8.846	**PIPE**, HTR INL W/HOSE (W/A.C.)	15565040

© 1990 GENERAL MOTORS SERVICE PARTS OPERATIONS—LIGHT TRUCK 52R

TA08-003
032290

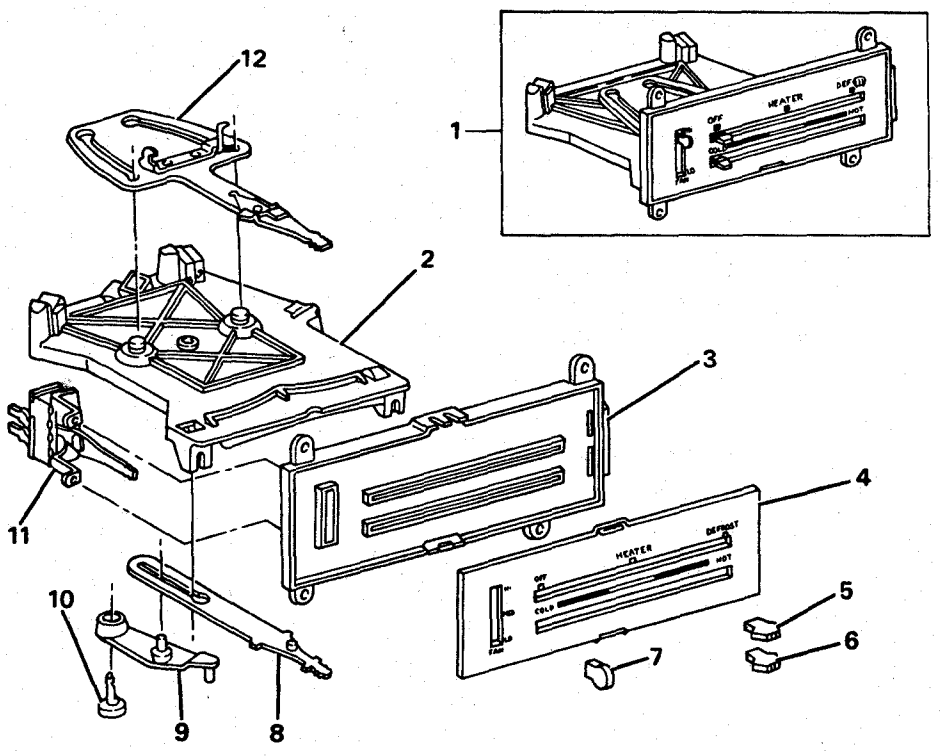

TA08-003

1985-1986 CK HEATER CONTROL ASM
1987-1991 RV HEATER CONTROL ASM

NOTE: QUANTITY IS ONE PER ASSEMBLY UNLESS OTHERWISE SPECIFIED.

1.	8.849	**CONTROL ASSEMBLY**, HEATER (INCL ITEMS #2-12)	16034561
2.	N.S.	**HOUSING**, HEATER CONTROL	
3.	N.S.	**PLATE**, DAIL PACKAGE	
4.	8.852	**DIAL KIT**, HEATER CONTROL (INCL ITEMS #5,6,7)	1226174
5.	8.852	**KNOB**, MODE LEVER(PART OF #4)	336406
6.	8.852	**KNOB**, TEMPERATURE LEVER(PART OF #4)	336406
7.	8.852	**KNOB**, BLOWER SWITCH(PART OF #4)	336406
8.	N.S.	**LEVER**, HEATER TEMPERATURE	
9.	N.S.	**CAM**, TEMPERATURE CONTROL CABLE	
10.	N.S.	**PIN**, CABLE CAM PIVOT	
11.	8.852	**SWITCH**, BLOWER (9.275)	16032480
12.	N.S.	**LEVER**, HEATER MODE	

© 1990 GENERAL MOTORS SERVICE PARTS OPERATIONS—LIGHT TRUCK 52R

GROUP 9.000

ILLUSTRATION INDEX

TITLE	PAGE
1985-1986 CK(03) BODY MOUNTING	9-1
1987-1989 RV(03) BODY MOUNTING	9-1
1985-1986 CK(43) BODY MOUNTING	9-2
1987-1991 RV(43) BODY MOUNTING	9-2
1985-1986 CK(06) BODY MOUNTING	9-3
1987-1991 RV(06) BODY MOUNTING	9-3
1985-1986 K(16) BODY MOUNTING	9-4
1987-1991 V(16) BODY MOUNTING	9-4
1985-1986 CK A/C & HEATER MODULE ASM	9-7
1987-1991 RV A/C & HEATER MODULE ASM	9-7
1985-1986 CK A/C & HEATER MODULE ASM/REAR AIR (C69)	9-8
1987-1991 RV A/C & HEATER MODULE ASM/REAR AIR (C69)	9-8
1985-1986 CK A/C COMPRESSOR ASM/R-4	9-9
1987-1990 RV A/C COMPRESSOR ASM/R-4	9-9
1985-1986 CK A/C COMPRESSOR ASM/R-4	9-13
1987-1991 RV A/C COMPRESSOR ASM/R-4	9-13
1985-1986 CK A/C COMPRESSOR ASM/A-6	9-15
1987-1990 RV A/C COMPRESSOR ASM/A-6	9-15
1991 RV A/C COMPRESSOR ASM/HR-6	9-17
1985 CK A/C COMPRESSOR MOUNTING (LE8/454W) (W/STAINLESS STEEL EXHAUST H5D)	9-18
1986 CK A/C COMPRESSOR MOUNTING (LE8/454W)	9-18
1987-1989 RV A/C COMPRESSOR MOUNTING (LE8/454W,L19/7.4N)	9-18
1985 CK A/C COMPRESSOR MOUNTING (LE8/454) (W/CAST IRON EXHAUST MANIFOLD H4D)	9-19
1985-1986 CK A/C COMPRESSOR MOUNTING (L25/292T)	9-20
1987-1989 RV A/C COMPRESSOR MOUNTING (L25/292T)	9-20
1985-1986 CK A/C COMPRESSOR MOUNTING	9-21
1987 RV A/C COMPRESSOR MOUNTING (LB4/4.3Z,LO3/5.0H)	9-21
1987-1988 RV A/C COMPRESSOR MOUNTING (LO5/5.7K,LT9/350M)	9-21
1985-1986 CK A/C COMPRESSOR MOUNTING (LH6/6.2C,LL4/6.2J) DIESEL	9-22
1987-1991 RV A/C COMPRESSOR MOUNTING (LH6/6.2C,LL4/6.2J) DIESEL	9-22
1989-1991 RV A/C COMPRESSOR MOUNTING (L05/5.7K)	9-25
1989-1991 RV A/C COMPRESSOR MOUNTING (L19/7.4N)	9-27
1985-1986 CK A/C REFRIGERATION SYSTEM	9-28
1987-1991 RV A/C REFRIGERATION SYSTEM	9-28
1985-1986 CK(06) A/C SYSTEM/REAR (C69)	9-31
1987-1991 RV(06) A/C SYSTEM/REAR (C69)	9-31
1985-1986 CK A/C EVAPORATOR ASM & BLOWER	9-33
1987-1991 RV A/C EVAPORATOR ASM & BLOWER	9-33
1985-1986 CK A/C AIR DISTRIBUTION SYSTEM/INSTRUMENT PANEL	9-34
1987-1991 RV A/C AIR DISTRIBUTION SYSTEM/INSTRUMENT PANEL	9-34
1985-1986 CK A/C AIR DISTRIBUTION SYSTEM/PLENUM	9-37
1987-1991 RV A/C AIR DISTRIBUTION SYSTEM/PLENUM	9-37
1985-1986 CK A/C & HEATER CONTROL ASM	9-38
1987-1991 RV A/C & HEATER CONTROL ASM	9-38
1985-1986 CK A/C CONTROL SYSTEM VACUUM & ELECTRICAL (C60)	9-39
1987-1991 RV A/C CONTROL SYSTEM VACUUM & ELECTRICAL (C60)	9-39
1985-1986 CK AUDIO SYSTEM	9-41
1987 RV AUDIO SYSTEM	9-41
1988-1991 RV AUDIO SYSTEM	9-43
1985-1986 CK CLUSTER ASM/INSTRUMENT PANEL	9-45
1987-1991 RV CLUSTER ASM/INSTRUMENT PANEL	9-45
1990-1991 RV CLUSTER ASM/INSTRUMENT PANEL	9-46
1985-1986 CK(03-43) LAMP/CARGO	9-47
1987-1991 RV(03-43) LAMP/CARGO	9-47

© 1990 GENERAL MOTORS SERVICE PARTS OPERATIONS—LIGHT TRUCK 52R

TM09-094
010484

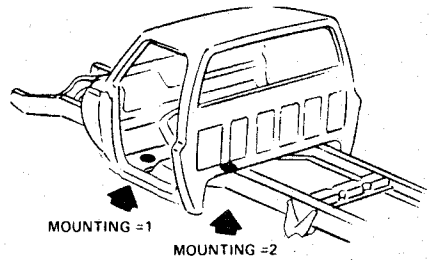

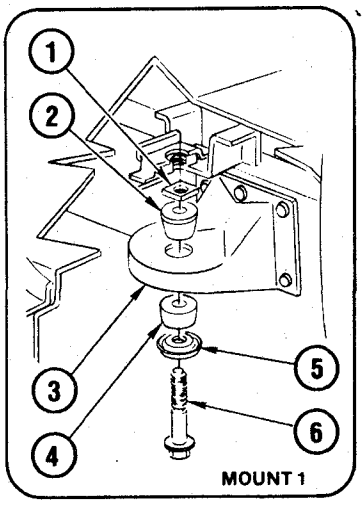

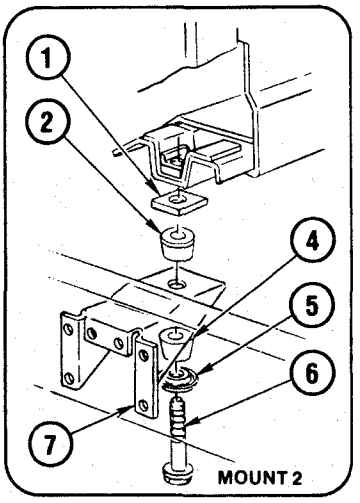

TM09-0945

1985-1986 CK(03) BODY MOUNTING
1987-1989 RV(03) BODY MOUNTING

1.	N.S.	**SHIM**, (NOT REQ'D)	
2.	1.270	**CUSHION**, BODY MT UPR 1,2 (9.023)	15597600
3.	9.009	**BRACKET**, BODY MT #1	14040692
4.	1.270	**CUSHION**, BODY MT LWR #1,2	15597629
5.	9.011	**RETAINER**, BODY MT CUSH LWR #1,2	14027472
6.	8.900	**BOLT**, HEX (1/2-13X3 1/2, 300M ZC)	455005
	8.929	**WASHER**, FL (9/16X1 1/8X1/16, ZP)	2441143
7.	9.009	**BRACKET**, BODY MT #2	15588500

© 1990 GENERAL MOTORS SERVICE PARTS OPERATIONS—LIGHT TRUCK 52R

TM09-096
030784

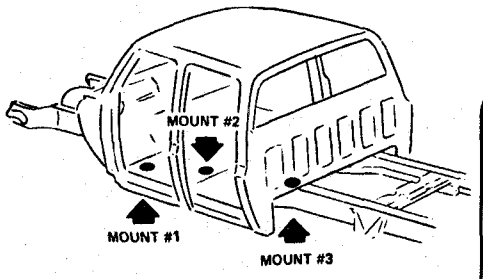

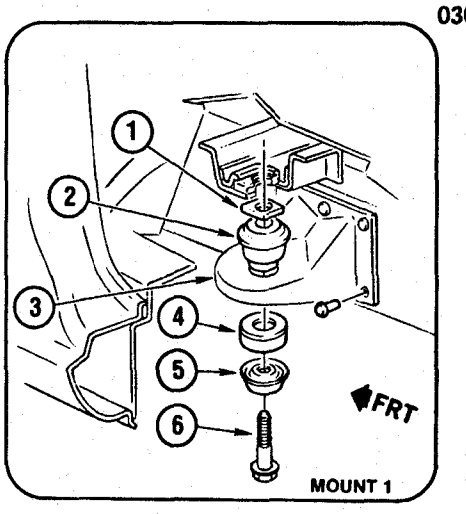

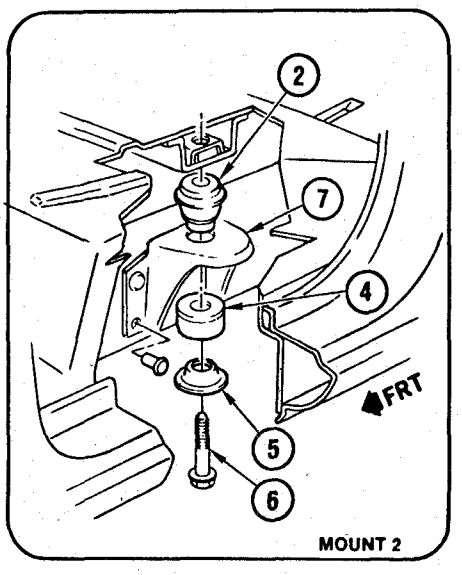

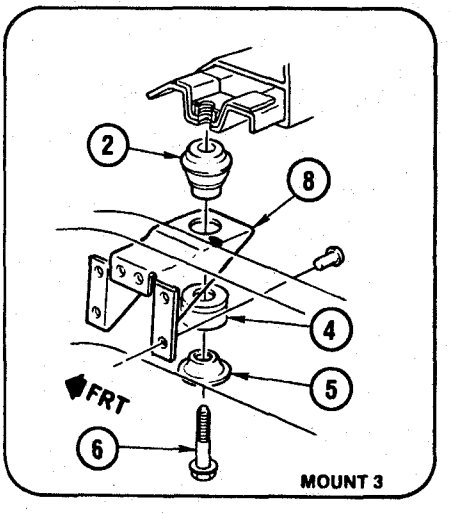

TM09-0965

1985-1986 CK(43) BODY MOUNTING
1987-1991 RV(43) BODY MOUNTING

1.	9.023	**SHIM**, BODY HOLDN BOLT (1989-91)	1489411
2.	9.023	**CUSHION**, BODY BOLT UPR	15597600
3.	9.009	**BRACKET**, BODY MT (#1)	14040692
4.	1.270	**CUSHION**, BODY BOLT LWR	15597629
5.	9.011	**RETAINER**, BODY BOLT LWR CUSH	14027472
6.	8.900	**BOLT**, HEX (1/2-13X3 1/2, 300M ZC)	455005
	8.929	**WASHER**, FL (9/16X1 1/8X1/16, ZP)	2441143
7.	9.009	**BRACKET**, BODY MT (#2)	14029286
8.	9.009	**BRACKET**, BODY MT (#3)	15588500

© 1990 GENERAL MOTORS SERVICE PARTS OPERATIONS—LIGHT TRUCK 52R

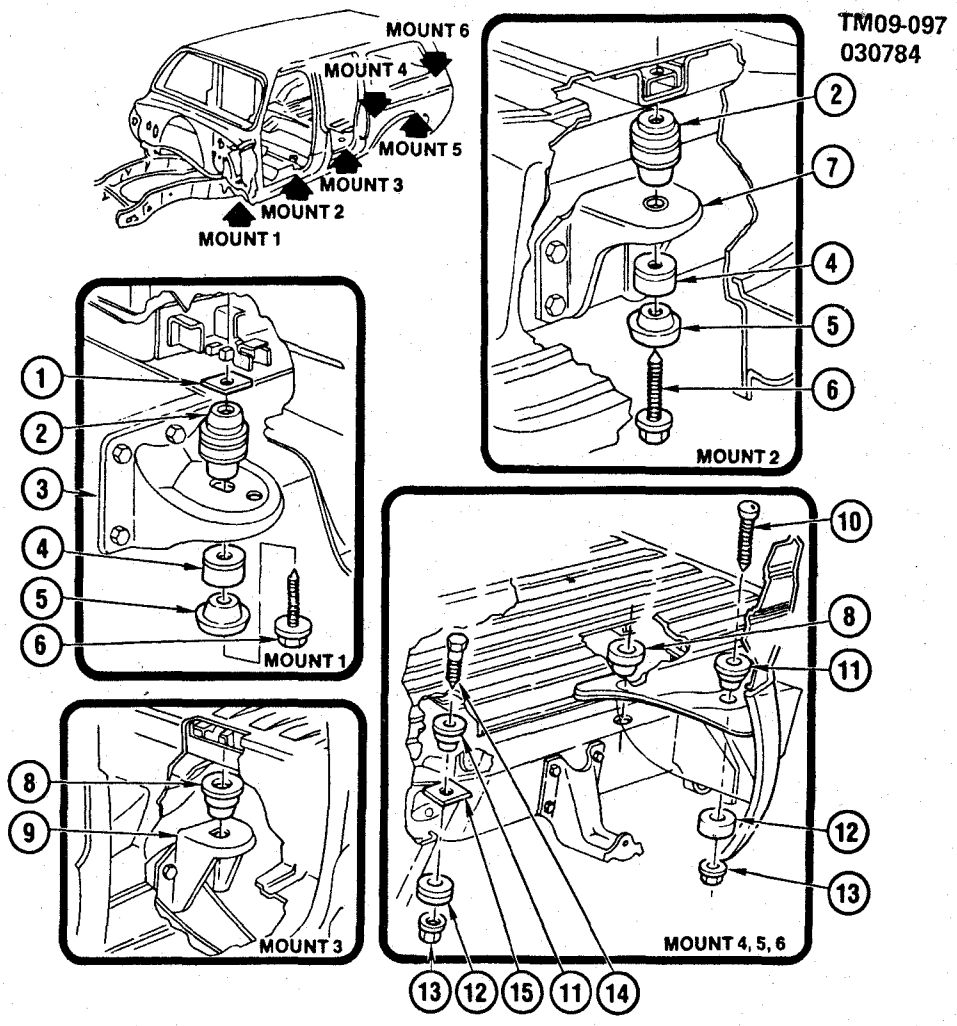

TM09-0975

1985-1986 CK(06) BODY MOUNTING
1987-1991 RV(06) BODY MOUNTING

1.	N.S.	**SHIM**, (NOT REQ'D)	
2.	9.023	**CUSHION**, BODY HOLDN UPR (#1,2)	15597600
3.	9.009	**BRACKET**, BODY MT (#1)	14040692
4.	1.270	**CUSHION**, BODY HOLDN LWR(#1,2)	15597629
5.	9.011	**RETAINER**, BODY HOLDN LWR CUSH	14027472
6.	8.900	**BOLT**, HEX (1/2-13X3 1/2, 300M ZC)	455005
	8.931	**WASHER**, SPR LK (.50X.87, ZOR)	9439514
7.	9.009	**BRACKET**, BODY MT (#2)	14029286
8.	9.023	**CUSHION**, BODY HOLDN (#3,6)	14032778
9.	9.009	**BRACKET**, BODY MT (#3)	6272342
10.	9.008	**BOLT**, BODY HOLDN (#6)	6274945
11.	9.023	**CUSHION**, BODY HOLDN UPR (#4,6)	14049981
12.	9.023	**INSULATOR**, BODY HOLDN LWR (#6)	6271842
13.	8.915	**NUT**, HEX (1/2-13, 301M CZ)	9414511
	8.929	**WASHER**, FL (13.2X30X3.5)	11502466
14.	9.008	**BOLT**, BODY HOLDN (#4)	15599971
15.	9.009	**BRACKET**, BODY MT (#4)	6272343

© 1990 GENERAL MOTORS SERVICE PARTS OPERATIONS—LIGHT TRUCK 52R

TM09-095
031584

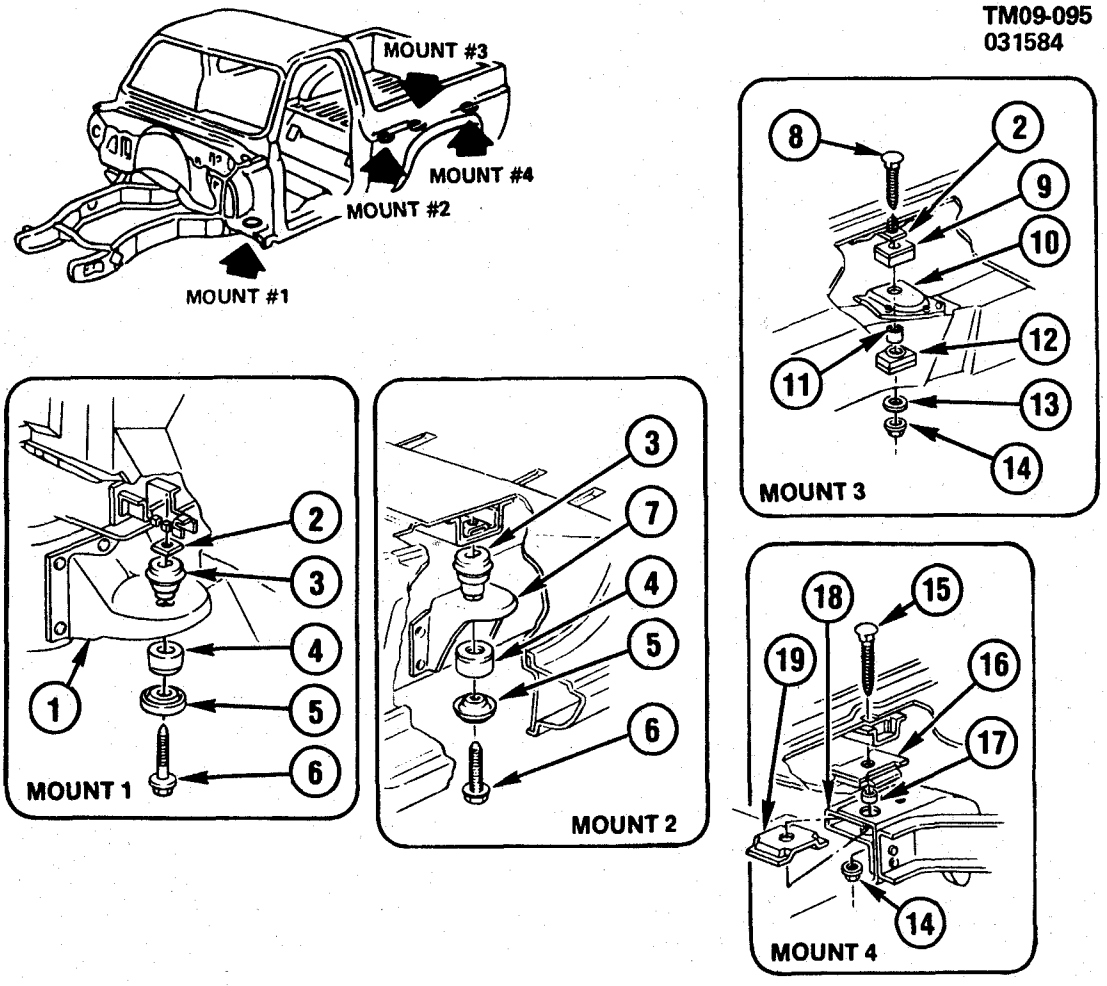

TM09-0955

1985-1986 K(16) BODY MOUNTING
1987-1991 V(16) BODY MOUNTING

1.	9.009	**BRACKET**, BODY MT #1	14040692
2.	N.S.	**SHIM**, (NOT REQ'D)	
3.	9.023	**CUSHION**, BODY MT UPR 1,2	15597600
4.	1.270	**CUSHION**, BODY MT LWR #1,2	15597629
5.	9.011	**RETAINER**, BODY MT CUSH LWR #1,2	14027472
6.	8.900	**BOLT**, HEX (1/2-13X3 1/2, 300M ZC)	455005
	8.929	**WASHER**, FL (9/16X1 1/8X1/16)	2444143
7.	9.009	**BRACKET**, BODY MT #2	14029286
8.	9.008	**BOLT**, BODY MT #3	14014389
9.	9.023	**CUSHION**, BODY MT UPR #3	3946246
10.	9.009	**BRACKET**, BODY MT-LH #3	6274179
	9.009	**BRACKET**, BODY MT-RH #3	326418
11.	9.023	**SPACER**, BODY MT CUSH #3	3946247
12.	9.023	**CUSHION**, BODY MT LWR #3	3909351
13.	9.023	**WASHER**, BODY MT #3 (7.629)	2387523
14.	8.915	**NUT**, HEX (1/2-13, CZ)	9414511
	8.929	**WASHER**, SPL FL (17/32X1 1/4X1/8)	3983589
15.	9.008	**BOLT**, BODY MT #4	14013710
16.	9.023	**CUSHION**, BODY MT UPR #4	337751
17.	9.023	**SPACER**, BODY MT CUSH #4	337773
18.	9.009	**BRACKET**, BODY MT CUSH #4-LH	14043889
	9.009	**BRACKET**, BODY MT CUSH #4-RH	14043890
19.	9.023	**CUSHION**, BODY MT LWR #4	327100

© 1990 GENERAL MOTORS SERVICE PARTS OPERATIONS—LIGHT TRUCK 52R

NOTES

BLANK PAGE

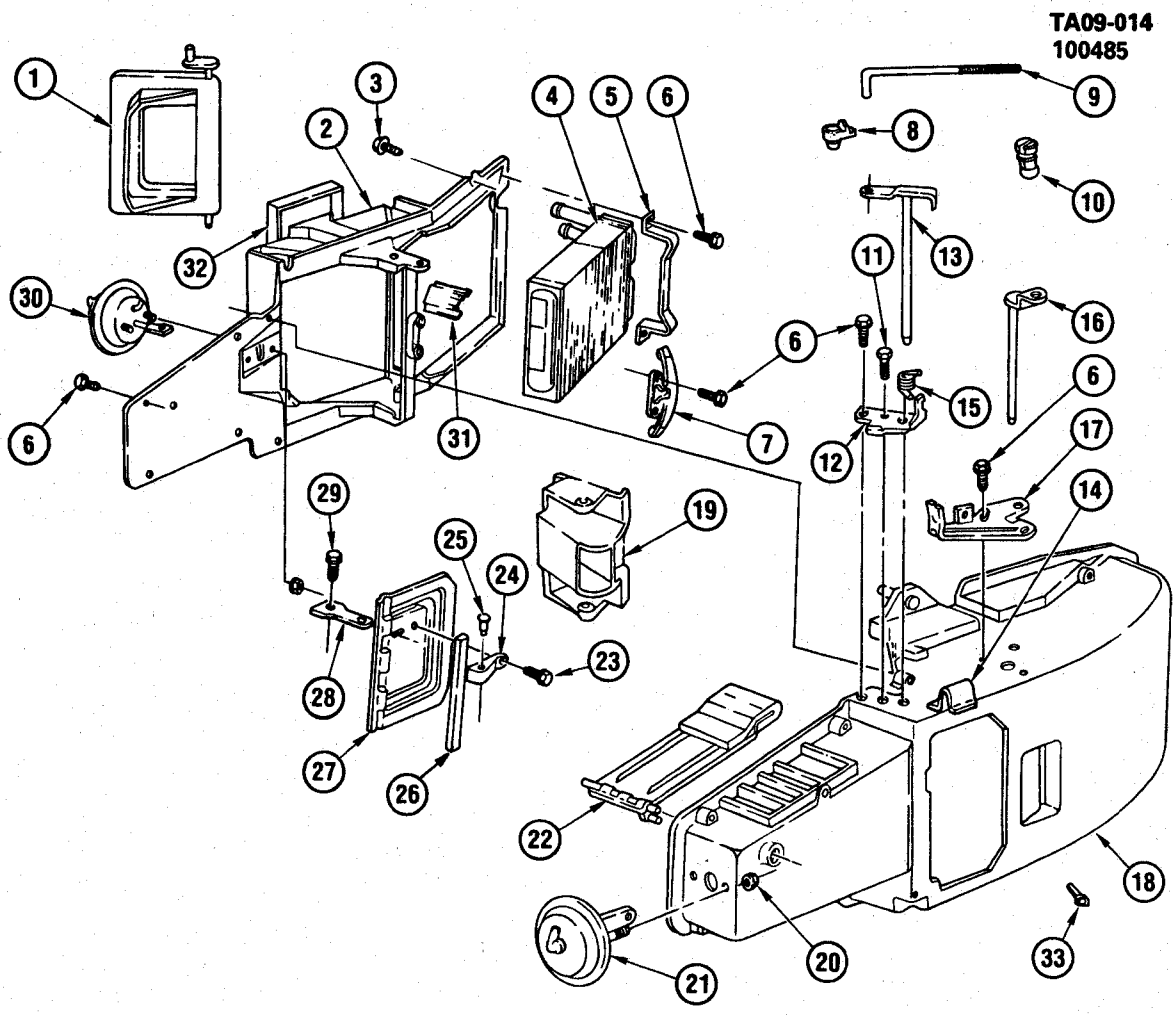

TA09-014

© 1990 GENERAL MOTORS SERVICE PARTS OPERATIONS—LIGHT TRUCK 52R

1985-1986 CK A/C & HEATER MODULE ASM
1987-1991 RV A/C & HEATER MODULE ASM

1.	9.786	**VALVE**, TEMPERATURE	3053542
2.	9.786	**HOUSING**, W/FRONT PLATE, VALVE HEATER DEFROST	3055284
3.	8.856	**BOLT**, HOUSING TO CORE (4 REQD)	3043009
4.	8.854	**CORE**, HEATER	3027265
5.	8.854	**STRAP**, CORE MOUNT	3028863
6.	8.977	**BOLT**, HWH TAP (M10X16X.50, PZOR)	9440166
7.	8.854	**CLAMP**, CORE MOUNT (HEADER TANK)	3025501
8.	9.786	**CONNECTOR**, LINK (PLASTIC)	20007898
9.	9.786	**LINK**, DIVERTER VALVE	3038869
10.	9.786	**CONNECTOR**, LINK ADJUSTABLE	1224062
11.	8.977	**SCREW**, HWH TAP (M4.2X1.41X16) PZOR	11509135
12.	9.262	**BRACKET**, DIVERTER VALVE ADJUSTABLE	3020477
13.	9.262	**SHAFT**, W/LEVER, DIVERTER VALVE	3039069
14.	9.786	**CLIP**, A/C OUTLET MOUNT	3012291
15.	9.786	**SPRING**, DIVERTER VALVE SHAFT	3022539
16.	9.786	**SHAFT**, W/LEVER, DIVERTER SLEEVE	3053541
17.	8.849	**BRACKET**, TEMPERATURE CABLE ADJUSTABLE MOUNT	3053540
18.	9.786	**CASE**, HEATER DEFROST A/C (1985)(INCL #23 THRU 28)	3056977
	9.211	**CASE**, HEATER DEFROST A/C (1986)(INCL #23 THRU 28)	3058653
19.	9.218	**BAFFLE**, AIR ADJUSTED	3056645
20.	8.921	**NUT**, MET SKW FLG (M5X15, PHOS)	11501047
21.	9.280	**ACTUATOR**, DEFROST VALVE VACCUM (1985-86)	1996730
22.	9.779	**VALVE**, DEFROST	3027434
23.	9.786	**SCREW**, HEX SER WA HD (#8-18X3/8")(PART OF #18)	3154511
24.	9.786	**CONNECTOR**, DIVERTER VALVE LINK(PART OF #18)	3018715
25.	9.786	**PIN**, DIVERTER VALVE LINKAGE(PART OF #18)	3037080
26.	N.S.	**SEAL**, DIVERTER VALVE (PART OF #18)	
27.	N.S.	**VALVE**, DIVERTER (PART OF #18)	
28.	9.786	**LINK**, DIVERTER VALVE ADJUSTED(PART OF #18)	3027712
29.	8.977	**SCREW**, HEX WA HD TAP (#10-16X3/8")	
30.	9.280	**ACTUATOR**, HEATER AIR DISTANCE VACCUM (1985)	1996686
	9.789	**ACTUATOR**, DIVERTER VALVE VACCUM	1996735
31.	9.786	**CLIP**, VALVE SHAFT RETAINER	3022741
32.	9.211	**GASKET**, HEATER DEFROST MOUNTING	3048477
33.	9.786	**STUD**, W/CLIP, HEATER EVAPORATOR MOUNTING	3024884

© 1990 GENERAL MOTORS SERVICE PARTS OPERATIONS—LIGHT TRUCK 52R

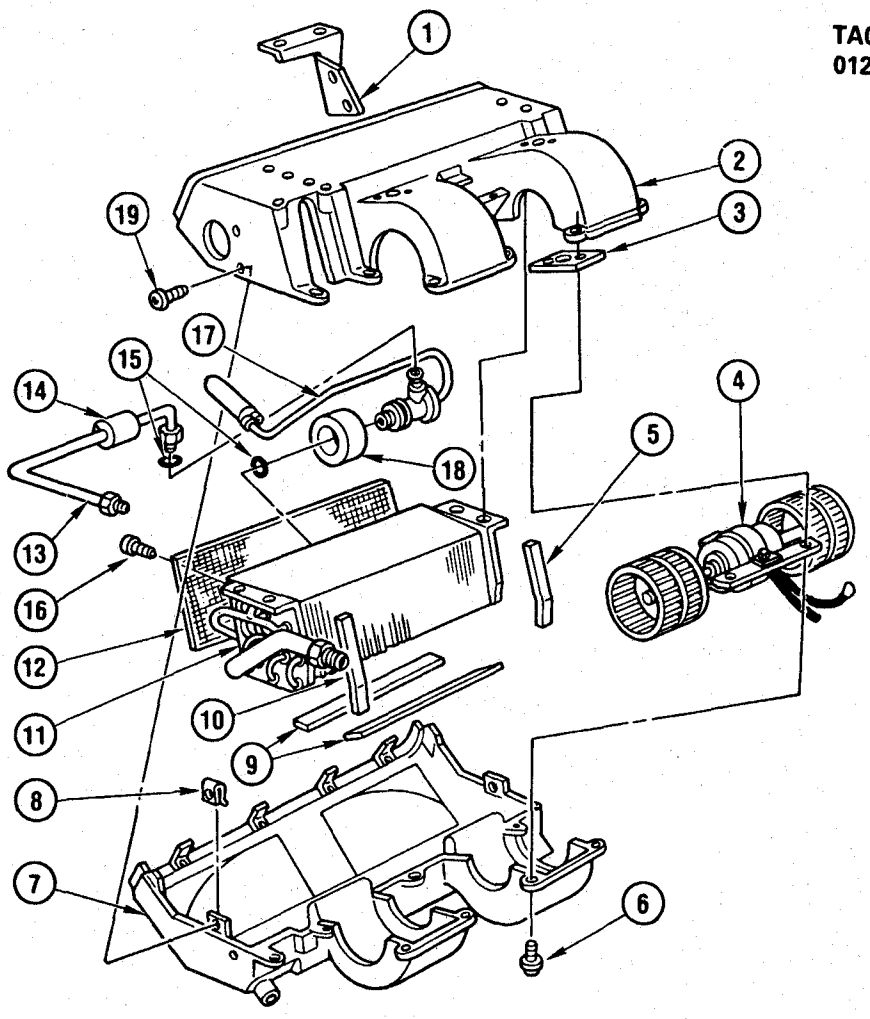

TA09-0215

1985-1986 CK A/C & HEATER MODULE ASM/REAR AIR (C69)
1987-1991 RV A/C & HEATER MODULE ASM/REAR AIR (C69)

1.	9.196	**BRACKET**, TUBE SUPPORT	3024976
2.	9.211	**CASE**, EVAPORATOR UPPER	3025868
3.	9.211	**PLATE**, BLOWER TO CASE BRACKET	3012072
4.	9.215	**MOTOR**, W/FAN & BRACKET	3031995
5.	9.211	**SEAL**, EVAP CORE (1.274)(18" LONG, CUT AS REQD)	3919753
6.	8.977	**SCREW**, HEX WA HD TAP (#8-18X5/8)	
7.	9.211	**CASE**, EVAPORATOR LOWER	3025867
8.	N.S.	**NUT**, "U" (#8-18)	
9.	9.211	**SEAL**, EVAPORATOR CORE BOTTOM	3014431
10.	9.260	**SEAL**, TUBE POLYURETHANE (6' LONG, CUT AS REQD)	3999572
11.	9.210	**CORE**, EVAPORATOR	3024972
12.	9.211	**SCREEN**, EVAPORATOR CORE	3014349
13.	9.220	**TUBE**, W/NUT, EXPANSION VALVE	3036630
14.	9.213	**INSULATOR**, EVAPORATOR & BLOWER MOTOR (.38 I.D.)	3019103
	9.213	**INSULATOR**, EVAPORATOR & BLOWER MOTOR (.88 I.D.)	3019104
15.	8.927	**O RING**,(5/16" ID RUBBER)	3093509
16.	9.210	**RETAINER**, EVAPORATOR CORE SCREEN	3040933
17.	9.213	**VALVE**, EXPANSION	12333205
18.	9.213	**INSULATOR**, EXPANSION VALVE (.88 ID)	3019104
19.	8.977	**SCREW**, FL TRIM HD C/R TAP (#8-18X5/8)	

© 1990 GENERAL MOTORS SERVICE PARTS OPERATIONS—LIGHT TRUCK 52R

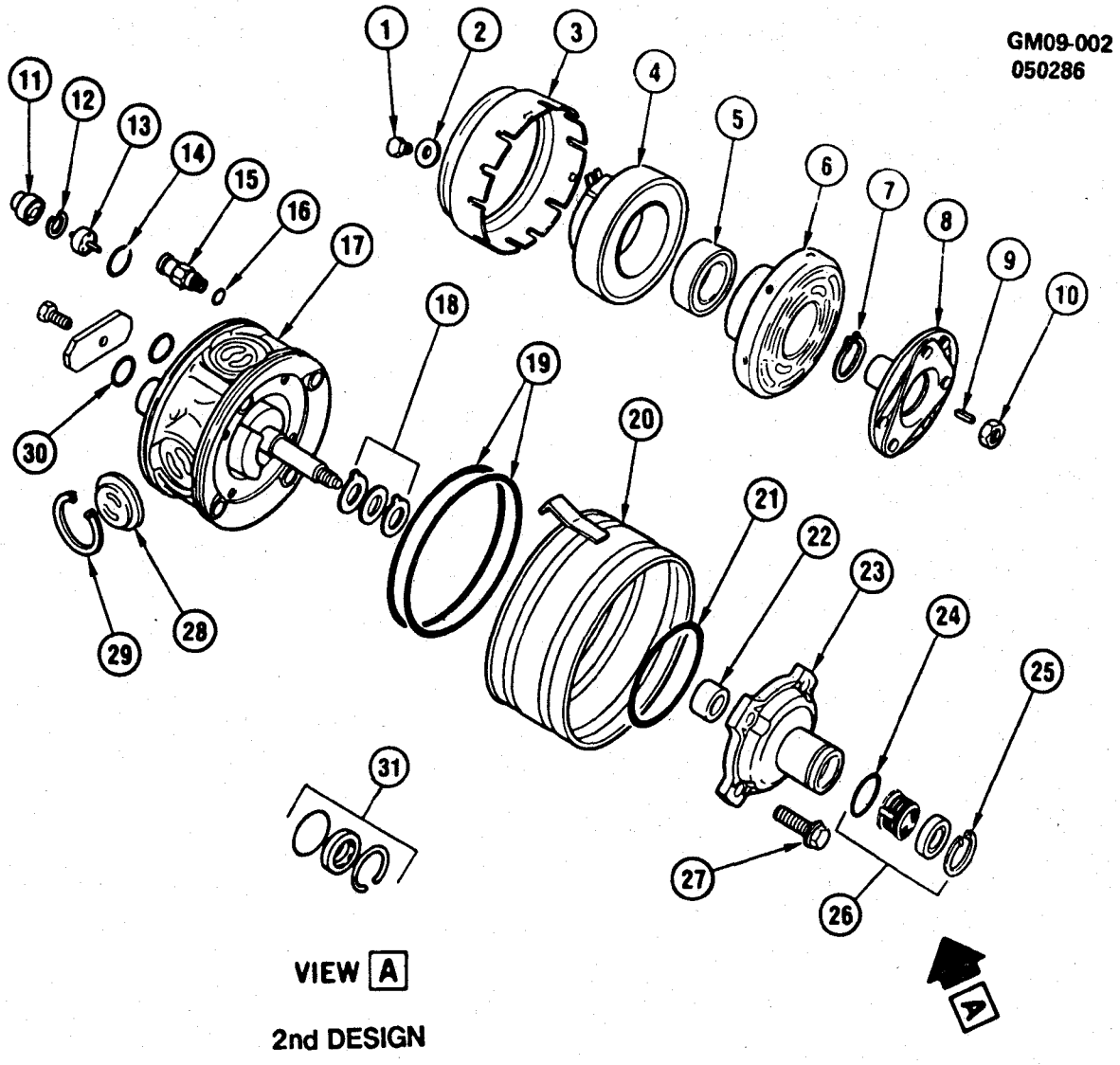

GM09-002

1985-1986 CK A/C COMPRESSOR ASM/R-4
1987-1990 RV A/C COMPRESSOR ASM/R-4

NOTE: SEAL KIT, SHAFT 6599114 GROUP 9.170 USED THRU 1984, SEAL KIT, SHAFT 2724319 GROUP 9.170 USED AFTER 1984.

1.	9.180	**SCREW**, PULLEY RIM MOUNTING
2.	9.180	**WASHER**, PULLEY RIM MOUNTING SCREEN
3.	9.180	**PULLEY**, COMPRESSOR
4.	9.186	**COIL**, W/HOUSING
5.	9.181	**BEARING**, PULLEY ROTOR
6.	9.172	**ROTOR**, W/BEARING COMPRESSOR
7.	9.181	**RING**, BEARING TO FRONT HEAD RETIANER
8.	9.188	**CLUTCH**, COMPRESSOR DRIVE
9.	9.188	**KEY**, CLUTCH HUB
10.	9.181	**NUT**, DRIVE SHAFT PULLEY
11.	N.S.	**CAP**, THERMAL SWITCH PROTECTIVE
12.	9.172	**RETAINER**, RR COMPRESSOR HEAD SWITCH
13.	9.275	**SWITCH KIT**, HI PRESSURE CUTOFF
14.	9.172	**O-RING**, SWITCH(*1)
15.	9.178	**VALVE**, PRESSURE RELIEF
16.	9.178	**O-RING**, RELIEF VALVE(*1)
17.	9.170	**CYLINDER**, W/SHAFT, COMPRESSOR
18.	9.170	**WASHER KIT**, THRUST COMPRESSOR(*1)
19.	9.172	**O-RING**, CYLINDER TO SHELL(*1)
20.	9.170	**SHELL**, COMPRESSOR

© 1990 GENERAL MOTORS SERVICE PARTS OPERATIONS—LIGHT TRUCK 52R

21.	9.172	**SEAL**, FRONT HEAD TO CYLINDER(*1)
22.	9.172	**BEARING**, FRONT HEAD MAIN
23.	9.174	**HEAD**, W/BEARING, FRONT
24.	N.S.	**SEAL**, SEAT O-RING (INCLUDED W/#26)
25.	9.175	**RING**, SEAL SEAT RETAINER
26.	9.170	**SEAL KIT**, SHAFT(PART OF #24)
27.	N.S.	**SCREW**, W/WASHER ASM, FRT HD MT
28.	9.172	**PLATE**, VALVE
29.	9.172	**RING**, VALVE PLATE RETIANER
30.	9.222	**SEAL**, SUCTION DISCH PORTS(*1)
31.	9.170	**SEAL KIT**, SHAFT

NOTE 1: ALSO PART OF O RING KIT 9956746 GROUP 9.170.

© 1990 GENERAL MOTORS SERVICE PARTS OPERATIONS—LIGHT TRUCK 52R

NOTES

BLANK PAGE

© 1990 GENERAL MOTORS SERVICE PARTS OPERATIONS—LIGHT TRUCK 52R

TS09-001
110189

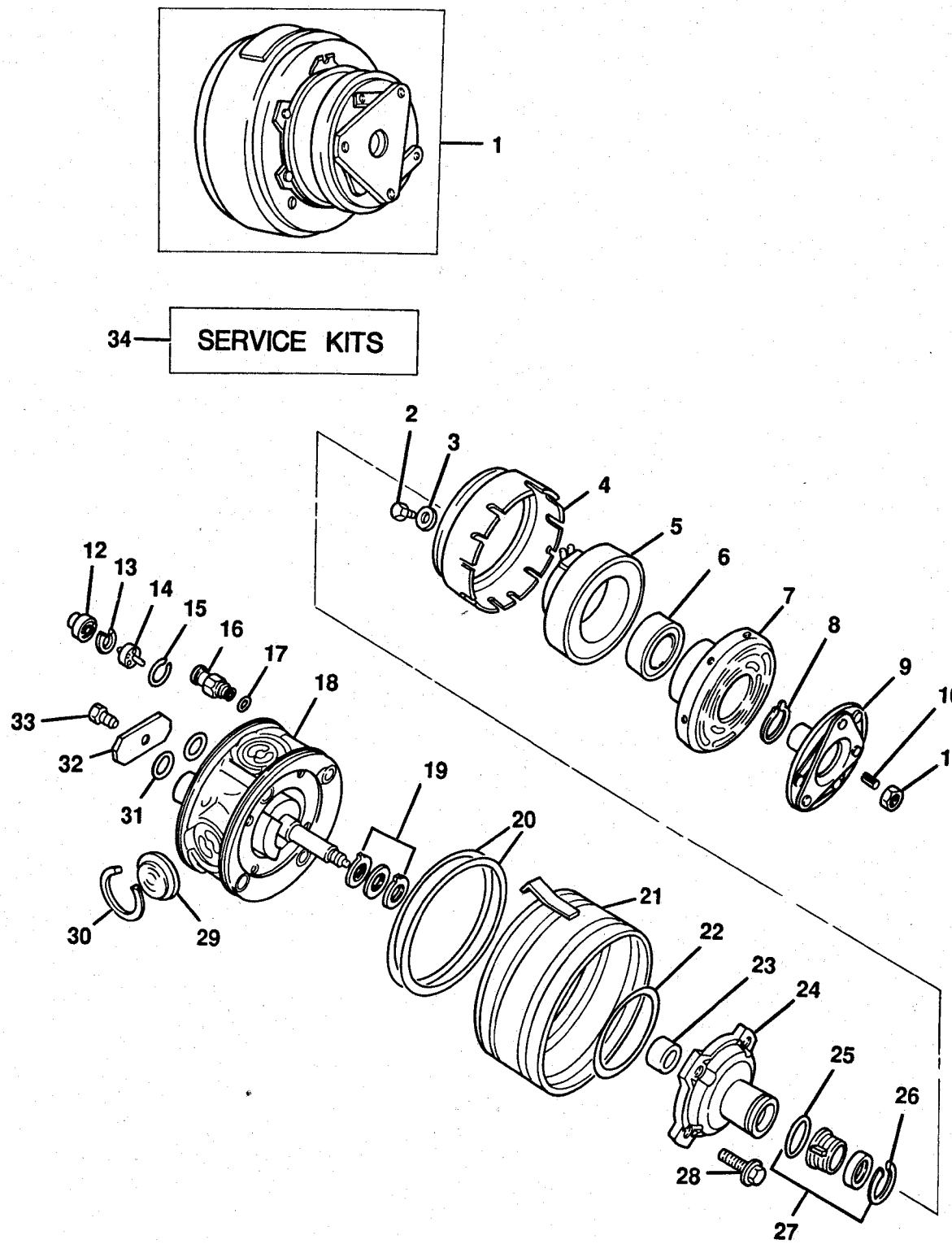

TS09-0019

© 1990 GENERAL MOTORS SERVICE PARTS OPERATIONS—LIGHT TRUCK 52R

1985-1986 CK A/C COMPRESSOR ASM/R-4
1987-1991 RV A/C COMPRESSOR ASM/R-4

NOTE: QUANTITY IS ONE PER ASSEMBLY UNLESS OTHERWISE SPECIFIED.

1.	9.170	**COMPRESSOR ASM**, A/C (INCL ITEM #2-33)	12326202
	9.170	**COMPRESSOR ASM**, A/C (1985 1ST DES)(1986-90)(INCL ITEM #2-33)	12326198
	9.170	**COMPRESSOR ASM**, A/C (W/4.3Z)(INCL ITEM #2-33)	12326202
	9.170	**COMPRESSOR ASM**, A/C (INCL ITEM #2-33)	12327548
	9.282	**OIL**, COMPRESSOR (1 QUART)	5416939
2.	9.180	**SCREW**, PULLEY RIM MOUNTING (6 REQD)	6557996
3.	9.180	**WASHER**, PULLEY RIM MOUNTING SCREW (6 REQD)	6557996
4.	9.180	**PULLEY**, COMPRESSOR (5.0 DIA)(W/2.8R)	6551971
	9.180	**PULLEY**, COMPRESSOR (4.2 DIA)(W/4.3Z)	6552150
5.	9.186	**COIL**, W/HOUSING	6551997
6.	9.181	**BEARING**, PULLEY ROTOR	6557684
7.	9.172	**ROTOR**, W/BEARING COMPRESSOR	6551216
8.	9.186	**RING**, BEARING TO FRONT HEAD RETAINER	6555329
9.	9.188	**CLUTCH**, COMPRESSOR DRIVE	6551996
10.	9.186	**KEY**, CLUTCH HUB	6555320
11.	9.181	**NUT**, DRIVE SHAFT PULLEY	6555385
12.	N.S.	**CAP**, THERMAL SWITCH PROTECTIVE	
13.	9.172	**RETAINER**, RR COMPRESSOR HEAD SWITCH (AS REQD)	6556408
14.	9.275	**SWITCH KIT**, HI PRESSURE CUTOFF	3041336
15.	9.172	**O-RING**, SWITCH (AS REQD)(ALSO PART OF ITEM #34)	6556407
16.	9.178	**VALVE**, PRESSURE RELIEF	5914435
17.	9.178	**O-RING**, RELIEF VALVE (ALSO PART OF ITEM #34)	52450548
18.	9.170	**CYLINDER**, W/SHAFT, COMPRESSOR	2724400
19.	9.171	**WASHER KIT**, THRUST COMPRESSOR (ALSO PART OF ITEM #34)	9956685
20.	9.172	**O-RING**, CYLINDER TO SHELL (2 REQD)(ALSO PART OF ITEM #34)	6556590
21.	9.170	**SHELL**, COMPRESSOR	2724158
22.	9.172	**SEAL**, FRONT HEAD TO CYLINDER (ALSO PART OF ITEM #34)	6556592
23.	9.172	**BEARING**, FRONT HEAD MAIN	6556572
24.	9.174	**HEAD**, W/BEARING, FRONT	3091989
25.	N.S.	**SEAL**, SEAT O-RING (PART OF ITEM #26)	
26.	9.175	**RING**, SEAL SEAT RETAINER	6556767
27.	9.175	**SEAL KIT**, SHAFT (INCL ITEM #25)	2724319
28.	N.S.	**SCREW**, W/WASHER ASM, FRONT HEAD MOUNTING	
29.	9.172	**PLATE**, VALVE (4 REQD)	6551141
30.	9.172	**RING**, VALVE PLATE RETAINER (4 REQD)	6556589
31.	9.222	**SEAL**, SUCTION DISCHARGE PORTS (ALSO PART OF ITEM #34)	6558587
32.	N.S.	**PLATE**	
33.	8.900	**BOLT**, HEX (AS REQD)	9424069
34.	9.170	**O-RING KIT**, (INCL ITEMS #15,17,19,20,22,31)	9956746

© 1990 GENERAL MOTORS SERVICE PARTS OPERATIONS—LIGHT TRUCK 52R

TX09-051
081390

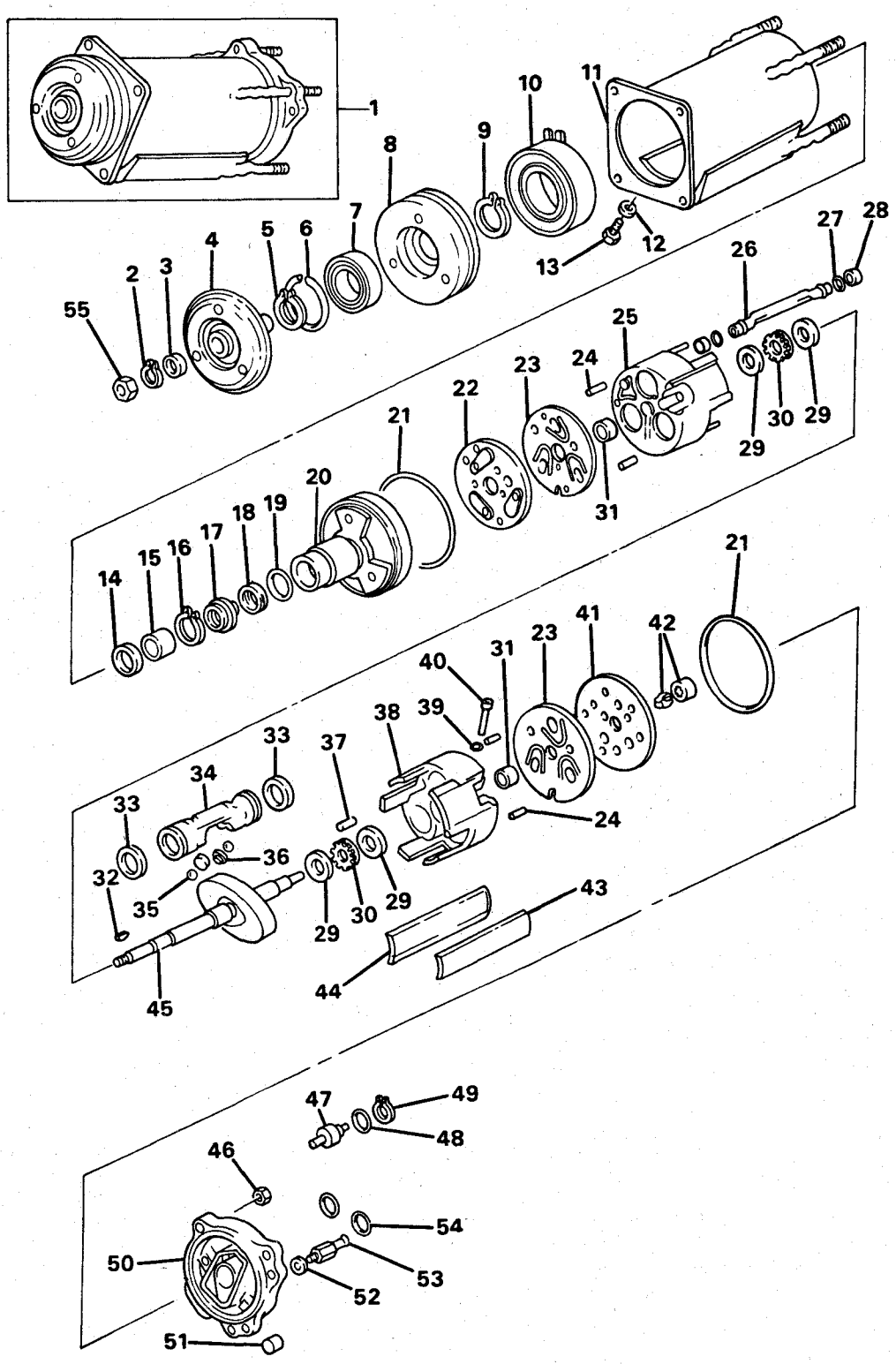

TX09-0511

© 1990 GENERAL MOTORS SERVICE PARTS OPERATIONS—LIGHT TRUCK 52R

1985-1986 CK A/C COMPRESSOR ASM/A-6
1987-1990 RV A/C COMPRESSOR ASM/A-6

1.	9.181	**NUT**, DRIVE SHAFT	6556923
2.	9.175	**RING**, DRIVE SHAFT HUB RETAINING	52450548
3.	N.S.	**SPACER**, DRIVE SHAFT HUB TO NUT	
4.	9.188	**PLATE**, COMPRESSOR CLUTCH, W/HUB	6554432
5.	9.181	**RING**, BEARING TO HEAD RET	6555329
6.	9.181	**RING**, BEARING TO PULLEY HUB RET	6555338
7.	9.181	**BEARING**, PULLEY	908287
8.	9.180	**PULLEY**, COMPRESSOR	6557050
9.	9.175	**RING**, COIL & HOUSING RETAINER	6555330
10.	9.186	**COIL**, COMPRESSOR CLUTCH, W/HOUSING	6550835
11.	9.170	**SHELL**, COMPRESSOR (INCL ITEMS #12,13)	2724176
12.	9.177	**GASKET**, OIL FILLER SCREW (ALSO PART OF ITEM #11)	5858696
13.	9.177	**SCREW**, OIL FILLER (ALSO PART OF ITEM #11)	5858694
14.	9.175	**RETAINER**, SEAL(*1)	6556076
15.	9.175	**SEAL**, SLEEVE (FELT)(*1)	6556077
16.	9.172	**RING**, SEAL SEAT RETAINER(*1)	6556767
17.	N.S.	**SEAL**, FELT SLEEVE RETAINER(*1)	
18.	N.S.	**SEAL**, FELT SLEEVE(*1)	
19.	N.S.	**RING**, SEAL SEAT(*1,2)	
20.	9.174	**HEAD**, CYLINDER FRONT	6555283
21.	N.S.	**SEAL**, HEAD O-RING(*1)	
22.	9.172	**VALVE PLATE**, FRONT DISCHARGE W/VLV	5914706
23.	N.S.	**VALVE**, SUCTION REED	
24.	9.178	**PIN**, CYLINDER LOCATOR	6590686
25.	9.170	**CYLINDER**, FRONT	5914807
26.	N.S.	**TUBE KIT**, DISCHARGE(*2)	
27.	N.S.	**RING**, DISCHARGE TUBE(*1)	
28.	9.172	**BUSHING**, DISCHARGE TUBE(*2)	6555440
29.	9.172	**RACE**, WOBBLE PLATE THRUST BEARING (SELECTIVE)	6556000
30.	9.172	**BEARING**, WOBBLE PLATE THRUST	6555259
31.	N.S.	**BEARING**, MAIN SHAFT	
32.	9.188	**KEY**, CLUTCH HUB	6555320
33.	9.172	**RING**, PISTON	6556605
34.	9.172	**PISTON**, COMPRESSOR	6551150
35.	9.172	**BALL**, PISTON DRIVE	6555258
36.	9.172	**SEAT**, PISTON BALL DRIVE (SELECTIVE)	6557000
37.	9.178	**PIN**, HEAD LOCATOR	274795
38.	9.170	**CYLINDER**, REAR	5914809
39.	9.172	**O-RING**, OIL INLET TUBE(*1)	5929144
40.	9.172	**TUBE**, OIL PUMP SUCTION	6555298
41.	9.172	**VALVE PLATE**, REAR DISCHARGE W/VLV	5914709
42.	9.172	**PUMP KIT**, INNER & OUTER ROTORS	6590594
43.	N.S.	**COVER**, MANIFOLD SUCTION CROSSOVER PASSAGE(*1)	
44.	N.S.	**SEAL**, MANIFOLD SUCTION COVER(*1)	
45.	9.170	**SHAFT**, COMPRESSOR W/WOBBLE PLATE	5914705
46.	9.170	**NUT KIT**, CYLINDER HEAD (7/16X20)	6590589
47.	N.S.	**SWITCH**, SUPERHEAT	
	N.S.	**SWITCH**, PRESSURE	
48.	N.S.	**RING**, SUPERHEAT SWITCH	
49.	9.172	**RETAINER**, RING	6590591
50.	9.174	**HEAD**, CYLINDER REAR	6557057
51.	9.172	**SCREEN**, SUCTION FREON INLET	6555299
52.	N.S.	**GASKET**, PRESSURE RELIEF VALVE (PART OF ITEM #53)	
53.	9.178	**VALVE**, PRESSURE RELIEF (INCL ITEM #52)	5914435
54.	9.172	**O-RING**, SUCTION DISCHARGE PORT(*1)	5887997

NOTE 1: NUT KIT, DRIVE SHAFT & HEAD-GROUP 9.170.
NOTE 2: RETAINING RING KIT-GROUP 9.172

© 1990 GENERAL MOTORS SERVICE PARTS OPERATIONS—LIGHT TRUCK 52R

TS09-002
112989

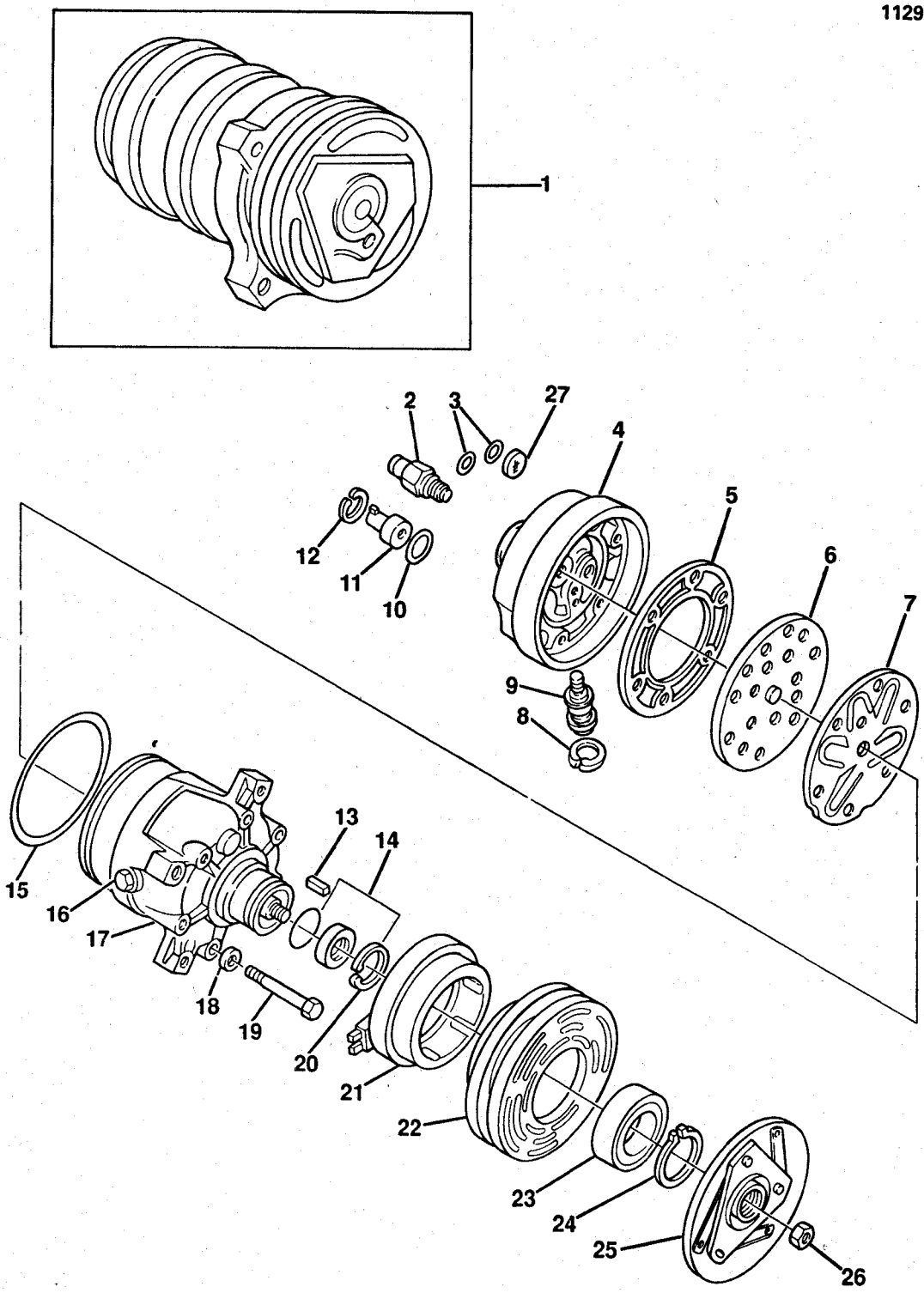

TS09-0027

© 1990 GENERAL MOTORS SERVICE PARTS OPERATIONS—LIGHT TRUCK 52R

1991 RV A/C COMPRESSOR ASM/HR-6

NOTE: QUANTITY IS ONE PER ASSEMBLY UNLESS OTHERWISE SPECIFIED.

1.	9.170	**COMPRESSOR ASM**, A/C (INCL ITEMS #2-27)	12337657
	9.170	**COMPRESSOR**, A/C (W/O PULLEY)	2724404
	9.170	**COMPRESSOR ASM**, A/C (INCL ITEMS #2-27)	2724467
	9.170	**COMPRESSOR ASM**, A/C (INCL ITEMS #2-27)	2724469
	9.170	**COMPRESSOR ASM**, A/C (INCL ITEMS #2-27)	1131684
	9.282	**OIL**, COMPRESSOR (1 QUART)	5416939
2.	9.186	**VALVE**, PRESSURE RELIEF(*1)	5914435
	8.927	**O-RING**, (.351X.072) (AS REQD)(*1)	52450548
3.	9.222	**SEAL**, SUCTION DISCHARGE PORTS(*1)	6558587
4.	9.174	**HEAD**, REAR COMPRESSOR(*1)	2724426
5.	N.S.	**GASKET**, REAR HEAD(*1)	
6.	N.S.	**PLATE**, VALVE(*1)	
7.	N.S.	**REED**, SUCTION(*1)	
8.	9.176	**RETAINER**, W/O-RING CONTROL VALVE(*1)	2724330
9.	9.176	**CONTROL**, VALVE(*1)	2724331
10.	9.172	**O-RING**, SWITCH (AS REQD)(*1)	6556407
11.	9.275	**SWITCH**, HI SIDE-LO PRESSURE (2-TERM,GREEN)(*1)	2724334
12.	9.172	**RETAINER**, FAN OR CUT-OUT SWITCH (AS REQD)(*1)	6556408
13.	9.186	**KEY**, CLUTCH HUB(*1)	6555320
14.	9.175	**SEAL KIT**, SHAFT (INCL LIP SEAL,O-RING,RETAINING RING)(*1)	2724319
15.	9.175	**O-RING**, REAR HEAD(*1)	6557662
16.	9.175	**PLUG**, W/WASHER, DRAIN(*1)	6557638
17.	N.S.	**HOUSING**, COMPRESSOR(*1)	
18.	9.175	**GASKET**, HEAD BOLT (PART OF ITEM #19)(*1)	6557379
19.	9.173	**GASKET**, W/BOLT VALVE (INCL ITEM #18)(*1)	2724332
20.	9.175	**RING**, SEAL SEAT RETAINER(*1)	6556767
21.	9.186	**COIL**, W/HOUSING(*1)	6551997
22.	9.180	**PULLEY**, W/ROTOR & BEARING (5.0 DIA)(*1)	6551971
23.	9.181	**BEARING**, PULLEY(*1)	6557684
24.	9.186	**RING**, PULLEY BEARING TO FRONT HEAD(*1)	6555329
25.	9.188	**CLUTCH**, DRIVE(*1)	6552372
26.	9.186	**NUT**, SHAFT(*1)	6557414
27.	9.172	**SCREEN**, SUCTION(*1)	6558594

NOTE 1: PART OF ITEM #1.

© 1990 GENERAL MOTORS SERVICE PARTS OPERATIONS—LIGHT TRUCK 52R

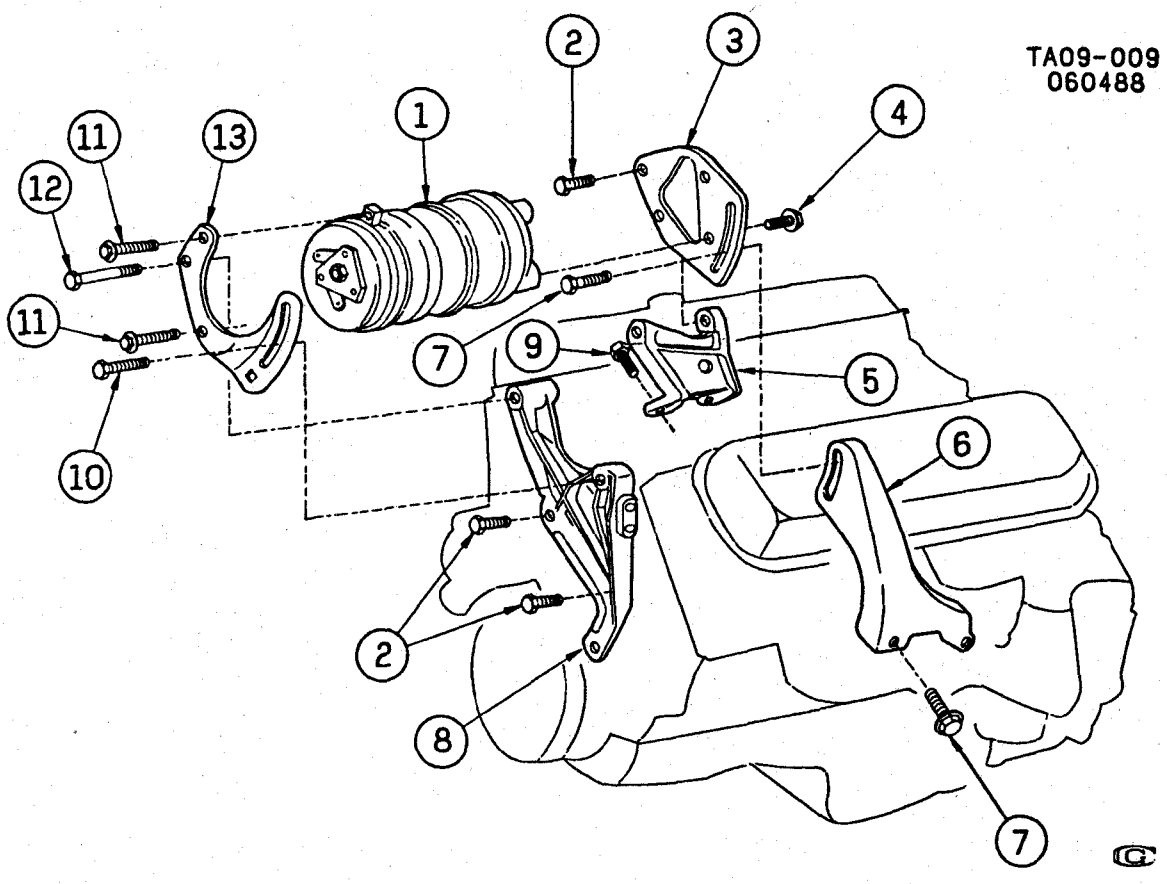

TA09-009

1985 CK A/C COMPRESSOR MOUNTING (LE8/454W) (W/STAINLESS STEEL EXHAUST H5D)
1986 CK A/C COMPRESSOR MOUNTING (LE8/454W)
1987-1989 RV A/C COMPRESSOR MOUNTING (LE8/454W,L19/7.4N)

1.	9.170	**COMPRESSOR**, A.C. (SEE CATALOG)	
2.	8.900	**BOLT**, HFH (3/8-16X1, 280M PZOR)	9439870
3.	9.171	**BRACKET**, A.C. CMPR RR ADJ	14087529
4.	8.900	**BOLT**, HFH (M8X1.25X25, 9.8 POR)	11508106
5.	9.171	**SUPPORT**, A.C. CMPR FRT ADJ BRKT	14087541
6.	9.171	**BRACE**, A.C. CMPR RR ADJ BRKT	14087528
7.	8.900	**BOLT**, HFH (3/8-16X3/4, 300M PZOR)	9439905
8.	9.171	**SUPPORT**, A.C. CMPR	14085743
9.	8.900	**BOLT**, HFH (3/8-16X1.75, 300M POR)	9441560
10.	8.900	**BOLT**, HEX (3/8-16X1.25, 280M PZOR)	9440249
11.	8.900	**BOLT**, HFH (3/8-16X.88, 280M POR)	9440169
12.	8.900	**BOLT**, HFH (3/8-16X2.75, 280M POR)	9440072
13.	9.171	**BRACKET**, A.C. CMPR FRT ADJ	14085740

© 1990 GENERAL MOTORS SERVICE PARTS OPERATIONS—LIGHT TRUCK 52R

T9-65

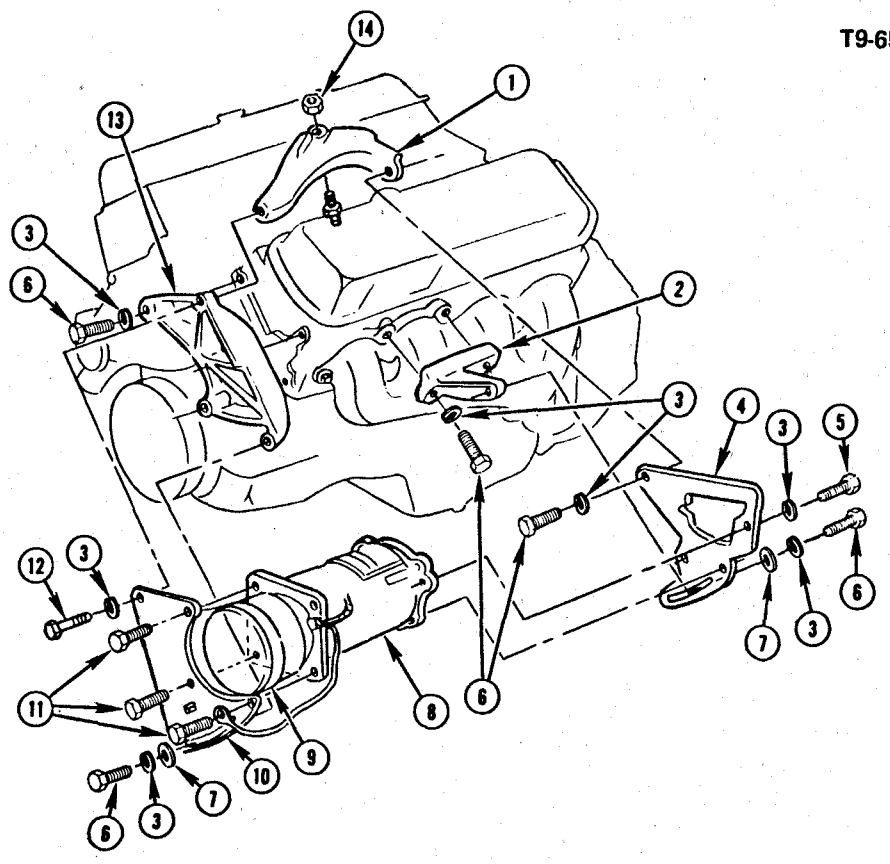

T9-65 5

1985 CK A/C COMPRESSOR MOUNTING (LE8/454) (W/CAST IRON EXHAUST MANIFOLD H4D)

1.	9.171	**BRACE**, COMPRESSOR REAR	3969910
2.	9.171	**SUPPORT**, COMPRESSOR REAR BRACKET	329227
3.	8.931	**WASHER**, LK (3/8, CAD/ZC)	
4.	9.171	**BRACKET**, COMPRESSOR REAR	14033984
5.	8.900	**BOLT**, HWH (M10X1.5X25, 10.9 PHOS)	
6.	8.900	**BOLT**, HEX (3/8-16X1 1/8, 300M ZC)	
7.	8.929	**WASHER**, FL (13/32X13/16X1/16, ZC)	
8.	9.170	**COMPRESSOR**, AXIAL COMPL (METRIC)	12300270
9.	1.066	**BELT**, A/C COMPRESSOR (SEE BELT CHART)	
10.	9.171	**BRACKET**, COMPRESSOR FRONT	14033983
11.	8.900	**BOLT**, HEX FLG (M8X1.25X20, 9.8)	
12.	8.900	**BOLT**, HEX (3/8-16X1 3/4, 300M)	
13.	9.171	**SUPPORT**, COMPRESSOR FRONT BRACKET	3969917
14.	8.915	**NUT**, HEX (3/8-16, 301M ZC)	

© 1990 GENERAL MOTORS SERVICE PARTS OPERATIONS—LIGHT TRUCK 52R

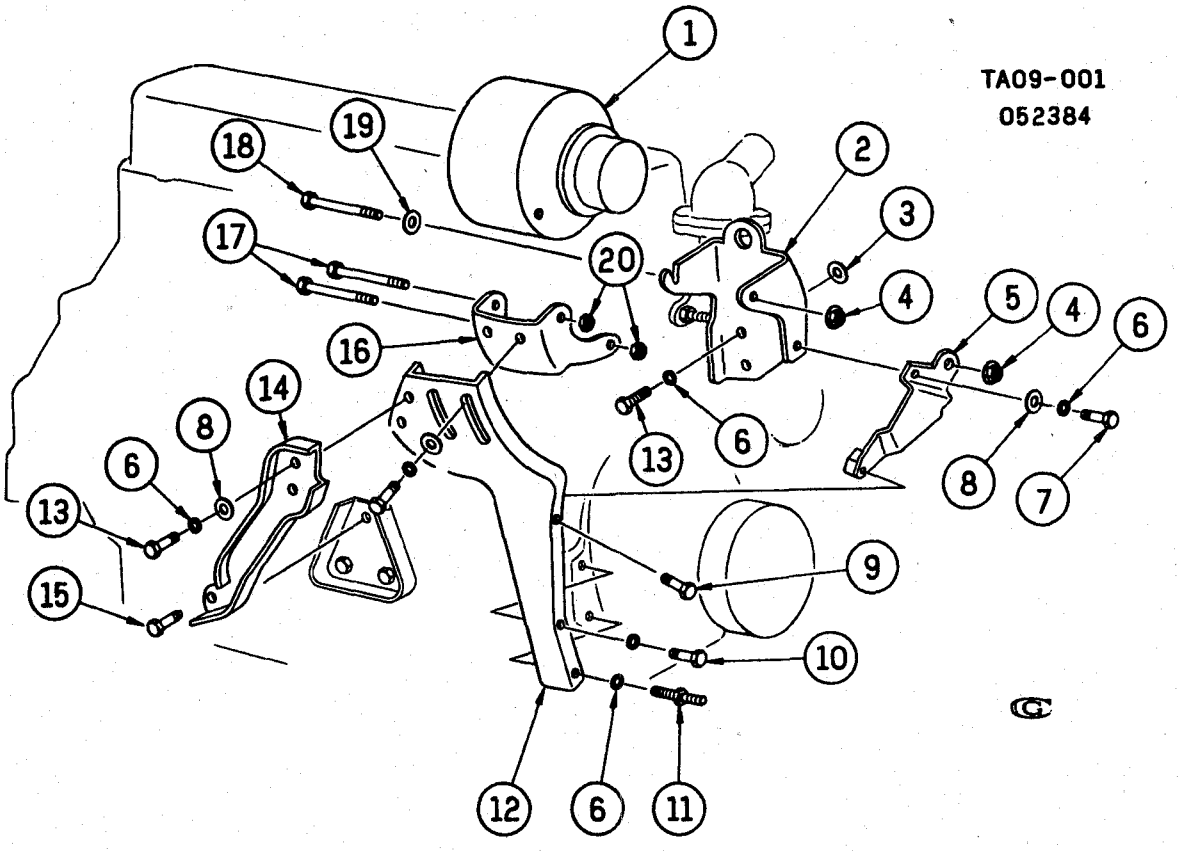

TA09-001

1985-1986 CK A/C COMPRESSOR MOUNTING (L25/292T)
1987-1989 RV A/C COMPRESSOR MOUNTING (L25/292T)

1.	9.170	**COMPRESSOR**, A.C. (SEE CATALOG)	
2.	9.171	**BRACKET**, CMPR MT	458159
3.	N.S.	**WASHER**, FLAT (3/8X1)	
4.	8.915	**NUT**, HEX (3/8X16X21/64, 301 ZN)	9414034
	8.929	**WASHER**, FL (.406X.812X.065, ZN)	120394
5.	9.171	**SUPPORT**, CMPR BRKT	458161
6.	8.931	**WASHER**, SPR LK (7/16X25/32X7/64, ZOR)	9439512
7.	8.900	**BOLT**, HEX (3/8-16X1, 300M)	9424320
8.	8.929	**WASHER**, FL (.406X.812X.065, ZN)	120394
9.	8.900	**BOLT**, HEX (3/8-16X1.25, 300M PS)	9440954
10.	8.900	**BOLT**, HEX (.375-16X.750, 280M ZC)	180120
11.	9.177	**STUD**, CMPR ADJ (3/8-16X1 1/2)(3.613)	6262864
12.	9.171	**BRACE**, CMPR ADJ (INNER)	458155
13.	8.900	**BOLT**, HEX (.375-16X.875, 300M CZ)(1985-86)	9442119
	8.900	**BOLT**, HEX (.375-16X.875, 300M PS)(1987-89)	9442119
14.	9.171	**BRACE**, CMPR RR (OUTER)	458157
15.	8.900	**BOLT**, HFH (3/8-16X.88, 280M POR)	9440169
16.	9.171	**BRACKET**, CMPR ADJ	14015387
17.	8.900	**BOLT**, HFH (M10X1.5X105, 9.8 PZOR)	11508142
18.	8.900	**BOLT**, HEX (.375-16X4, CZ)	456958
19.	8.929	**WASHER**, SPL (.390X.750X.03)	382105
20.	8.915	**NUT**, HEX (3/8X16X21/64, 301 ZN)	9414034
	8.929	**WASHER**, FLAT (.406X.812X.065, ZN)	120394

© 1990 GENERAL MOTORS SERVICE PARTS OPERATIONS—LIGHT TRUCK 52R

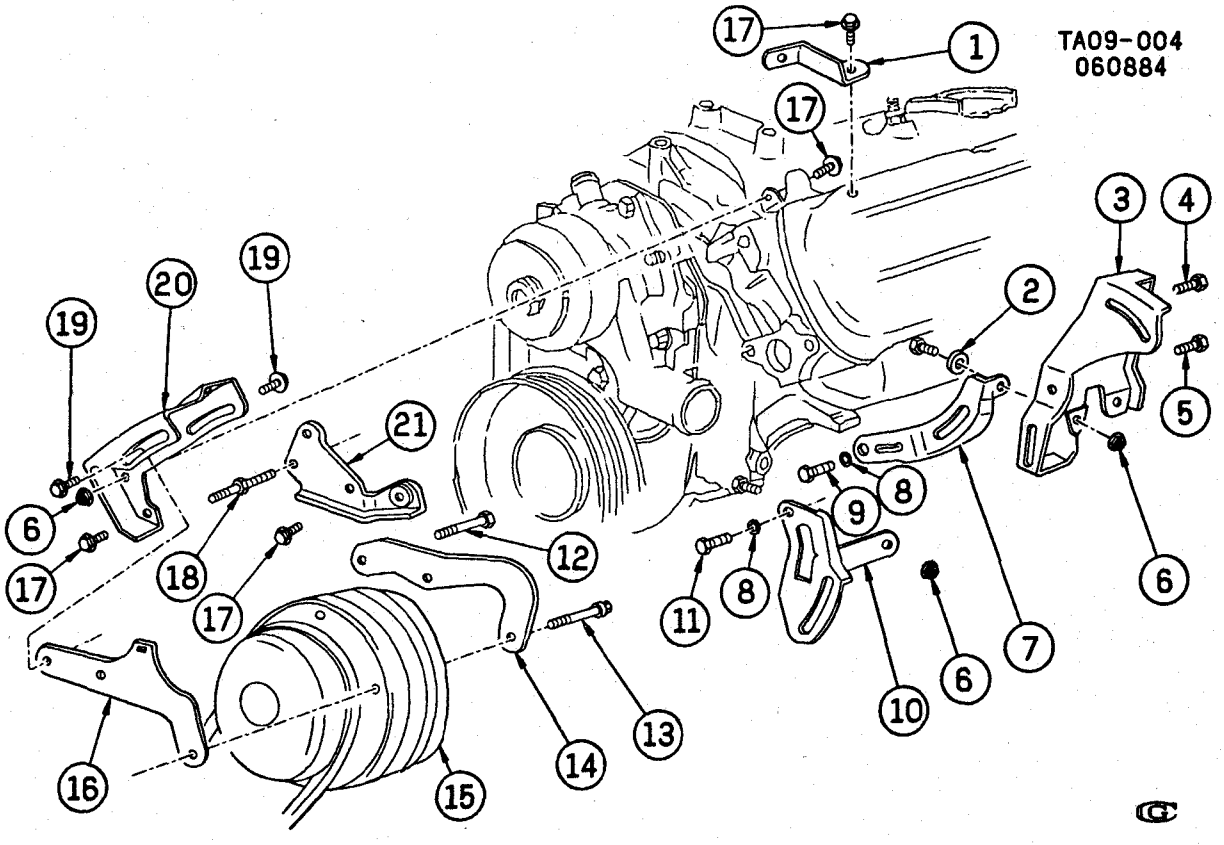

1985-1986 CK A/C COMPRESSOR MOUNTING
1987 RV A/C COMPRESSOR MOUNTING (LB4/4.3Z,LO3/5.0H)
1987-1988 RV A/C COMPRESSOR MOUNTING (LO5/5.7K,LT9/350M)

1.	9.171	**BRACE**, CMPR RR (EXC 4.3)	14047078
2.	8.929	**WASHER**, FL (15/32X15/16X1/16, ZP)	120395
3.	9.171	**SUPPORT**, CMPR OTR	14103211
4.	8.900	**BOLT**, HFH (M12X1.75X15, 9.8 POR)	11509023
5.	8.900	**BOLT**, HFH (M12X1.75X36, PZOR)	14089928
6.	8.917	**NUT**, HEX FLANGE (3/8-16, 286M)	14057004
7.	6.606	**BRACKET**, HYD STRG PUMP RR (1985-86)(EXC 350M)	14082318
	6.606	**BRACKET**, HYD STRG PUMP RR (1987)(W/4.3)	14082318
8.	8.931	**WASHER**, SPR LK (3/8X11/16, ZOR)	9439512
9.	8.900	**BOLT**, HEX (.375-16X.875, 300M PS)	9442119
10.	6.606	**BRACKET**, P.S. PUMP RR ADJ	10085793
11.	8.900	**BOLT**, HFH (3/8-16X3/4, 300M PZOR)	9439905
12.	8.900	**BOLT**, HFH (M10X1.5X95, 9.8 PZOR)(1985)	10049638
	8.900	**BOLT**, HFH (M10X1.5X95, 10.9)(1986-89)	10049638
13.	9.171	**BOLT**, A.C. CMPR RR ADJ	14081239
14.	9.171	**BRACKET**, A.C. CMPR RR	14081275
15.	9.170	**COMPRESSOR**, A.C. (1985-86)(*1)	12326198
16.	9.171	**BRACKET**, A.C. CMPR FRT	14081274
17.	8.900	**BOLT**, HFH (3/8-16X.88, 280M POR)	9440169
18.	8.981	**STUD**, HEX (3/8-16X.80, 300M)(BOTH ENDS)	14057279
19.	8.900	**BOLT**, HFH (M12X1.75X20, 9.8 POR)	10097602
20.	9.171	**BRACKET**, CMPR INR ADJ	14088837
21.	9.171	**SUPPORT**, AC CMPR	14081273

NOTE 1: FOR ADDITIONAL PART NUMBERS SEE CATALOG.

© 1990 GENERAL MOTORS SERVICE PARTS OPERATIONS—LIGHT TRUCK 52R

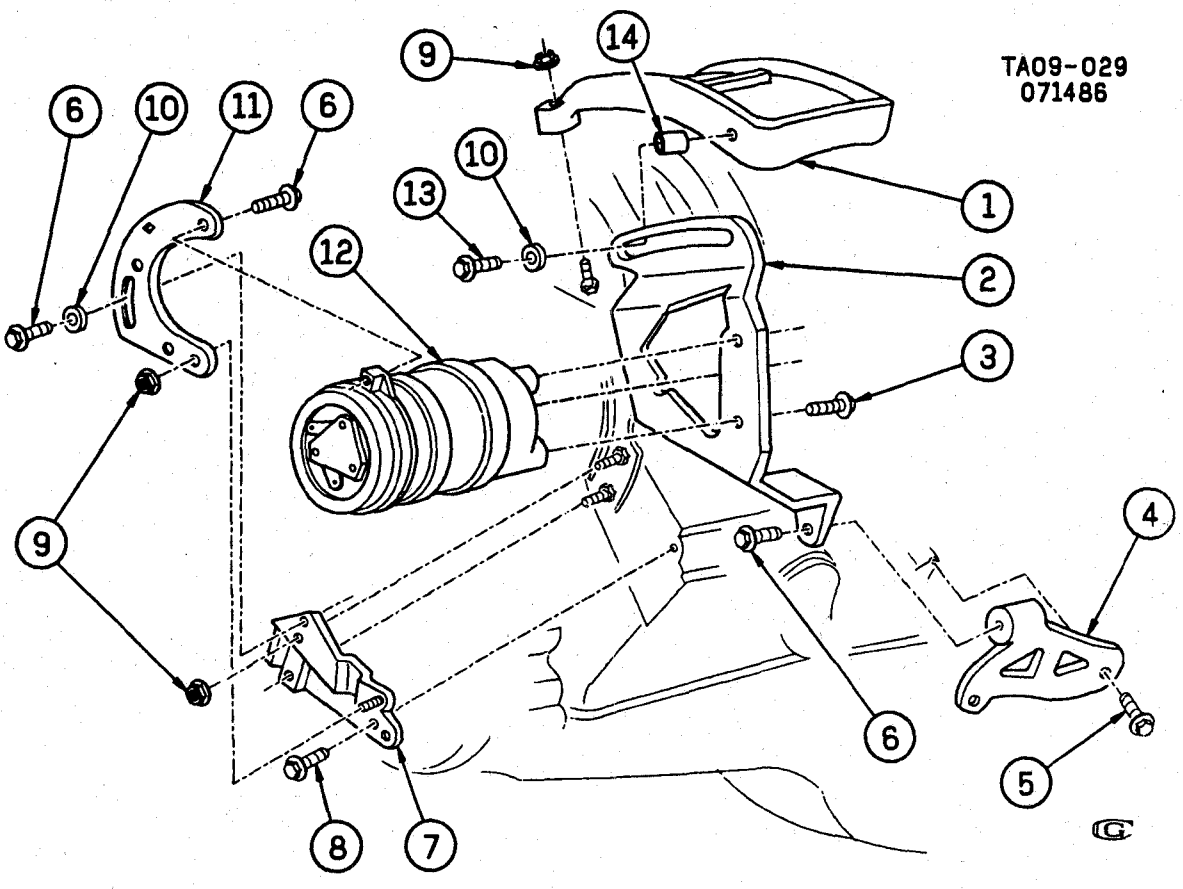

TA09-029

1985-1986 CK A/C COMPRESSOR MOUNTING (LH6/6.2C,LL4/6.2J) DIESEL
1987-1991 RV A/C COMPRESSOR MOUNTING (LH6/6.2C,LL4/6.2J) DIESEL

1.	9.171	**BRACKET**, CMPR RR UPR	14033866
2.	9.171	**BRACKET**, CMPR RR	15555617
3.	8.900	**BOLT**, HFH W/CON WA (M8X1.25X20, 9.8 POR)	11508017
4.	9.171	**SUPPORT**, CMPR RR BRKT	14033867
5.	3.604	**BOLT**, EXH MANIF (M10X1.5X65)(9.173)	14028922
6.	8.900	**BOLT**, HFH (M10X1.5X30, 10.9 POR)	1635490
7.	9.171	**BRACKET**, CMPR FRT ADJ	15592112
8.	8.900	**BOLT**, HEX (M10X1.5X20, 10.9 POR)	11504595
9.	8.917	**NUT**, HFH (M10X1.5, 10, POR)	11506101
10.	8.929	**WASHER**, FL (10.25X25.1, ZP)	1727059
11.	9.171	**BRACKET**, CMPR FRT	15592113
12.	9.170	**COMPRESSOR**, A.C. (SEE CATALOG)	
13.	8.900	**BOLT**, HFH (M10X1.5X65, 9.8 PZOR)	11508208
14.	9.171	**SPACER**, A.C. CMPR RR ADJ BRKT	15544996

© 1990 GENERAL MOTORS SERVICE PARTS OPERATIONS—LIGHT TRUCK 52R

NOTES

BLANK PAGE

TR09-300
042789

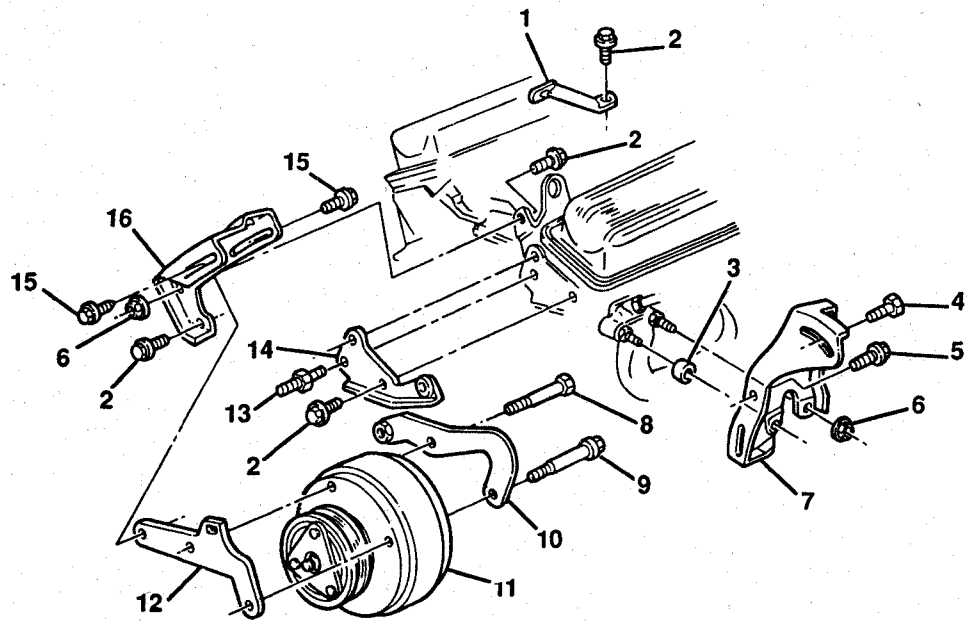

RV 200,300(03-43)

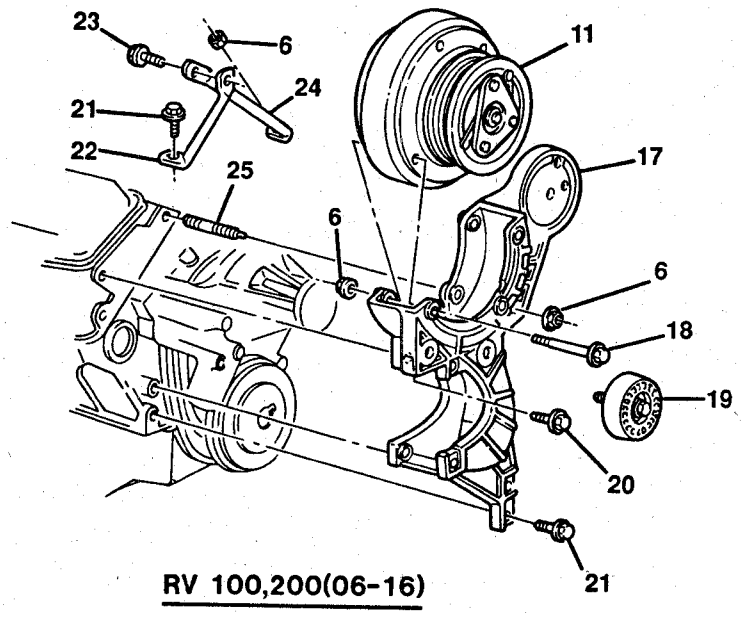

RV 100,200(06-16)

TR09-300

1989-1991 RV A/C COMPRESSOR MOUNTING (L05/5.7K)

1.	9.171	**BRACE**, CMPR ADJ BRKT	14047078
2.	8.900	**BOLT**, HFH (3/8-16X.88 280M POR)	9440169
3.	8.929	**WASHER**, FL (15/32X15/16X1/16 ZP)	120395
4.	8.900	**BOLT**, HFH (M12X1.75X15 9.8 POR)	11509023
5.	8.900	**BOLT**, HFH (M12X1.75X36 PZOR)	14089928
6.	8.917	**NUT**, HEX FLANGE (3/8-16 PC)	14057004
7.	9.171	**SUPPORT**, COMP OTR	14103211
8.	8.900	**BOLT**, HEX (M10X1.5X95,10.9 PC)	10049638
9.	9.171	**BOLT**, A.C. RR ADJ	14081239
10.	9.171	**BRACKET**, A.C. COMP RR ADJ	14081275
11.	9.170	**COMPRESSOR**, A.C. (SEE CATALOG)	
12.	9.171	**BRACKET**, A.C. COMP FRT	14081274
13.	8.981	**STUD**, HEX (3/8-16X.80-3/8-16X.80 300M POR)	14057279
14.	9.171	**SUPPORT**, A.C. COMP	14081273
15.	8.900	**BOLT**, HFH (M12X1.75X21,10.9 PC)	10097602
16.	9.171	**BRACKET**, COMP INR ADJ	14088837
17.	1.060	**BRACKET**, DRIVE BELT TENS	10129516
18.	9.173	**BOLT**, A.C. CMPR	10085707
19.	1.062	**PULLEY**, BELT IDLER	10129560
20.	8.900	**BOLT**, HFH (3/8-16X1.38 280M PZOR)	9439918
21.	8.900	**BOLT**, HFH (3/8-16X1.00 280M PZOR)	9439870
22.	1.060	**BRACE**, DR BELT TENS BRKT (TO INTAKE MANIF)	10069973
23.	8.900	**BOLT**, HEX FLG HD (M10X1.5X30 PZOR)	11507023
24.	1.060	**BRACE**, DR BELT TENS BRKT (TO CYL HEAD)	10129514
25.	3.655	**STUD**, DRV BELT TENS BRKT (9.52 X 69.85)	10055883

© 1990 GENERAL MOTORS SERVICE PARTS OPERATIONS—LIGHT TRUCK 52R

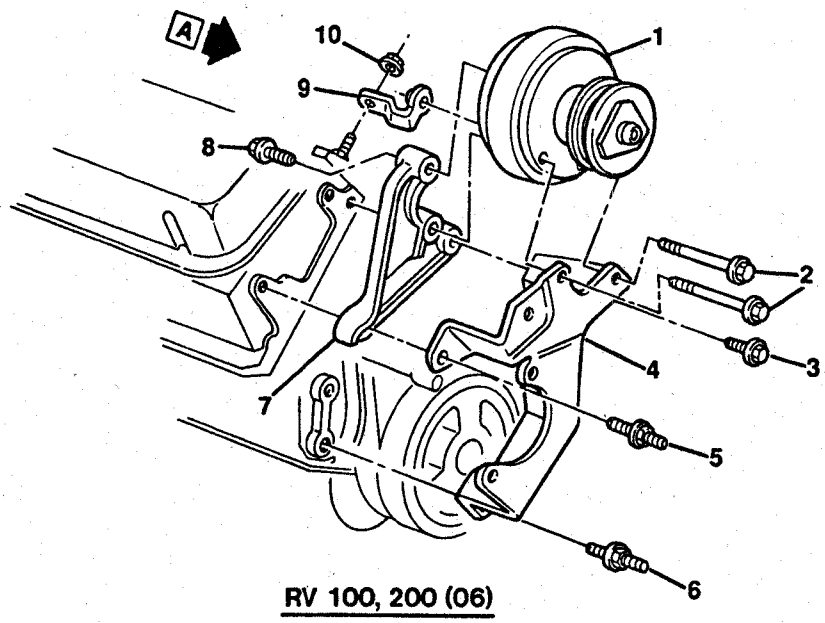

RV 100, 200 (06)

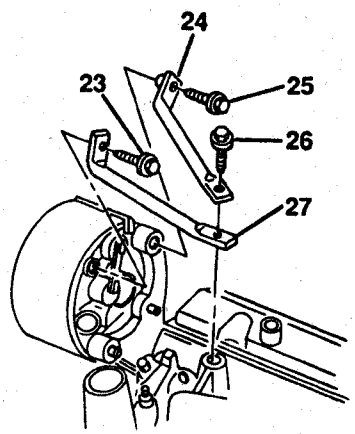

VIEW A

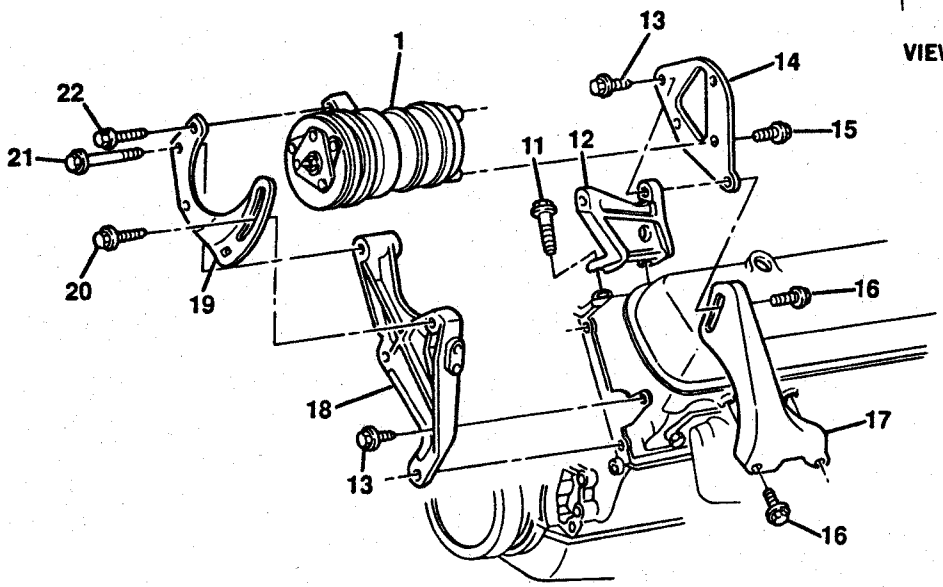

RV 200, 300 (03-43)

© 1990 GENERAL MOTORS SERVICE PARTS OPERATIONS—LIGHT TRUCK 52R

1989-1991 RV A/C COMPRESSOR MOUNTING (L19/7.4N)

1.	9.170	**COMPRESSOR**, A.C. (SEE CATALOG)(*1)	
2.	8.900	**BOLT**, HEX (M10X1.5X105 9.8 POR)	11514189
3.	9.173	**BOLT**, A.C. CMPR BRKT (3.655)	14103119
4.	9.171	**BRACKET**, A.C. CMPR & AIR INJ PUMP (3.655)	10129520
5.	9.171	**STUD**, A.C. CMPR & AIR INJ PUMP BRKT	14037662
6.	9.171	**STUD**, A.C. CMPR & AIR INJ PUMP BRKT	10052958
7.	9.171	**BRACE**, CMPR (CMPR TO CYL HEAD)(1989-90)	14103102
	9.171	**BRACE**,A/C CMPR((1991))(1)(1991)R2(L19,C60)	10129528
8.	8.900	**BOLT**, HEX (M12X1.75X45 10.9 POR)	11513961
9.	9.171	**BRACE**, CMPR (W/WELDNUT CMPR TO STUD)(1989-90)	14103104
10.	8.917	**NUT**, HEX FLANGE (3/8-16 PC)	14057004
11.	8.900	**BOLT**, HFH (3/8-16X1.75 300M POR)	9441560
12.	9.171	**SUPPORT**, A.C. FRT ADJ BRKT	14087541
13.	8.900	**BOLT**, HFH (3/8-16X1.00 280M PZOR)	9439870
14.	9.171	**BRACKET**, A.C. CMPR RR ADJ	14087529
15.	8.900	**BOLT**, HFH (M8X1.25X25 9.8 POR)	11508106
16.	8.900	**BOLT**, HFH (3/8-16X3/4 300M PZOR)	9439905
17.	9.171	**BRACE**, CMPR RR ADJ BRKT	14087528
18.	9.171	**SUPPORT**, A.C. CMPR	14085743
19.	9.171	**BRACKET**, A.C. CMPR FRT ADJ	14085740
20.	8.900	**BOLT**, HEX (3/8-16X1.25 280M PZOR)	9440249
21.	8.900	**BOLT**, HFH (3/8-16X2.75 280M POR)	9440072
22.	8.900	**BOLT**, HEX FLG HD (M10X1.5X30 PZOR)	11507023
24.	9.171	**BRACE**,A/C CMPR((1991))(1)(1991)R2(L19,C60)	10085786
27.	9.171	**BRACE**,A/C CMPR((1991))(1)(1991)R2(L19,C60)	10085788

NOTE 1: SEE RESPECTIVE GROUP FOR DETAILED ILLUSTRATION.

RPO DEFINITIONS
C60 - AIR CONDITIONER,FRONT,MANUAL CONTROLS
L19 - ENGINE,7.4L V8(T.B.I.)

© 1990 GENERAL MOTORS SERVICE PARTS OPERATIONS—LIGHT TRUCK 52R

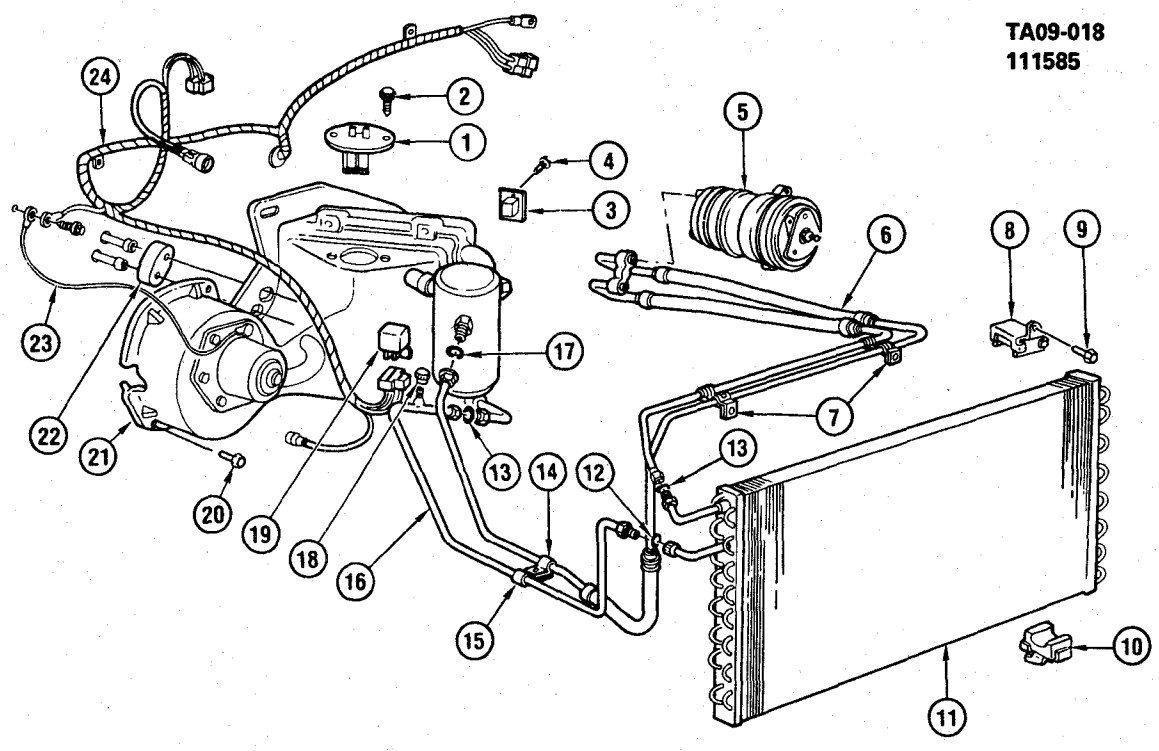

TA09-018

1985-1986 CK A/C REFRIGERATION SYSTEM
1987-1991 RV A/C REFRIGERATION SYSTEM

1.	9.275	**RESISTOR**, BLO MTR	336403
2.	8.977	**SCREW**, HEX W/FL WA TAP (M4.2X1.41X16)	11509374
3.	9.275	**RESISTOR**, AUX BLO MTR (W/C69)	3929051
4.	8.977	**SCREW**, HEX TAP W/FL WA (M4.2X1.41X16)	11509374
5.	9.170	**COMPRESSOR**, A.C. COMPL (SEE CATALOG)(*1)	
6.	9.226	**HOSE**, A.C. COMPRESSOR(SEE CATALOG)	
7.	8.950	**CLIP**, TUBE (.69 & .56 OD)	338637
8.	9.190	**INSULATOR**, CNDSR UPR MT	14047837
9.	8.977	**BOLT**, HEX WA HD TAP (M6.3X1.81X20)	
10.	9.190	**INSULATOR**, CNDSR LWR MT	14028850
12.	8.927	**O-RING**, CNDSR (.301X.070 THK)	3093509
13.	8.927	**O-RING**, A.C. TUBE (.426X.070 THK)	3094214
14.	2.559	**CLIP**, CLSD TYPE (.625X.343, ZC)	340818
15.	8.950	**CLIP**, CLSD STL (7/16X5/16, ZC)	25526629
16.	9.225	**TUBE**, A.C. CNDSR (EXC C69)(INCL #12,13)	15568998
	9.225	**TUBE**, A.C. CNDSR (W/C69)(INCL #12,13)	15568999
17.	8.927	**SEAL**, ACCUM (.676X.070 THK)	3094216
18.	9.177	**CAP**, REFRIG CHRG VLV (3/8-24)(1985-89)	52451233
	9.177	**CAP**, REFRIG CHRG VLV (3/8-24)(1990-91)	52451233
19.	9.277	**RELAY**, A.C. HI BLO CUTOUT	14036273
20.	8.977	**SCREW**, HWH TAP W/FL WA (M6.3X1.81X25)	11505023
21.	9.262	**EVAPORATOR BLOWER ASM** (*1)	
22.	9.211	**SEAL**, EVAP CORE TUBE	6273327
23.	9.215	**WIRE**, GROUND	3026183
24.	9.276	**HARNESS**, A.C. WRG (SEE CATALOG)	

NOTE 1: SEE RESPECTIVE GROUP FOR DETAILED ILLUSTRATION.

RPO DEFINITIONS
C69 - HVAC SYSTEM, AIR CONDITIONER ROOF MOUNTED

© 1990 GENERAL MOTORS SERVICE PARTS OPERATIONS—LIGHT TRUCK 52R

NOTES

BLANK PAGE

TA09-015
112685

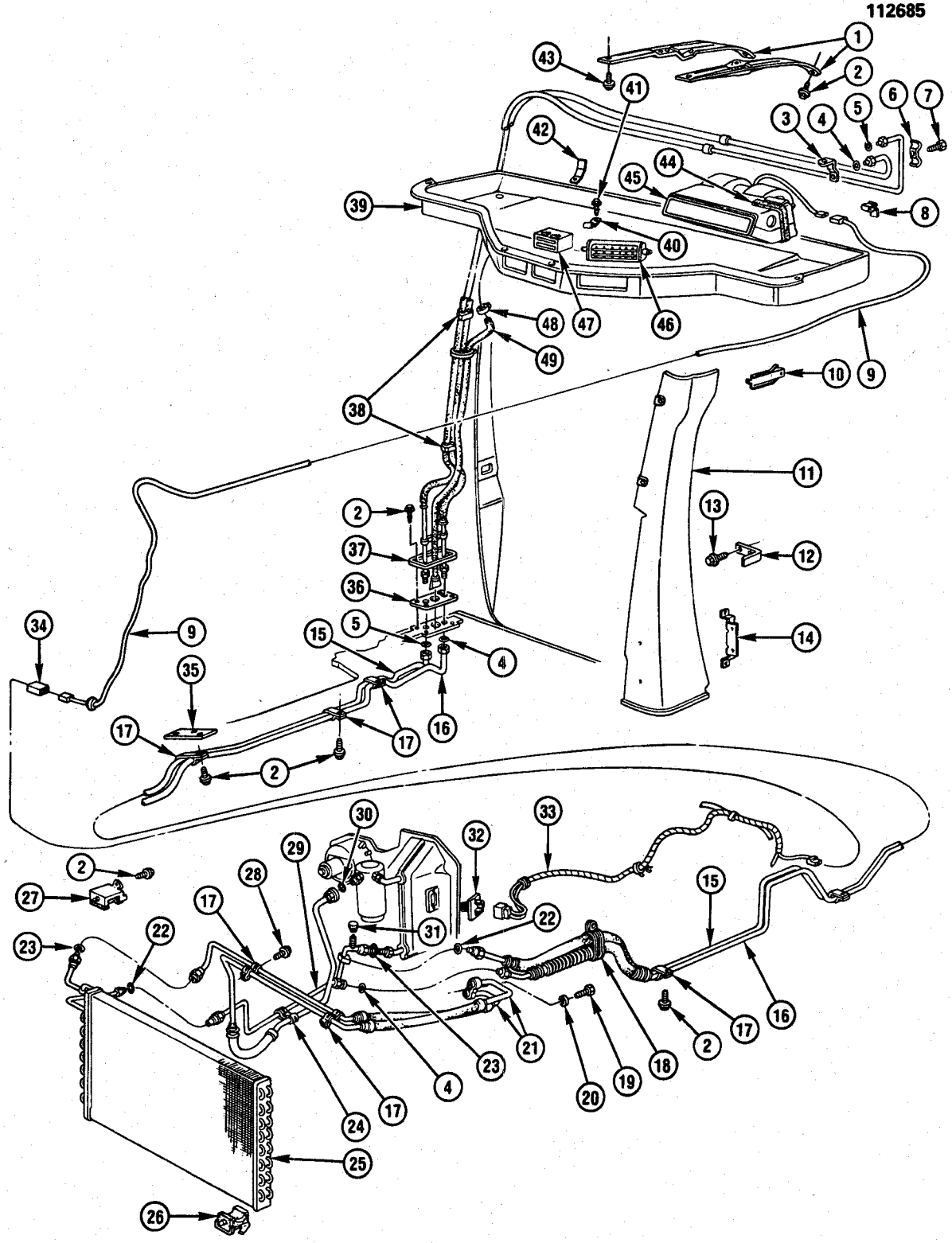

TA09-0155

© 1990 GENERAL MOTORS SERVICE PARTS OPERATIONS—LIGHT TRUCK 52R

1985-1986 CK(06) A/C SYSTEM/REAR (C69)
1987-1991 RV(06) A/C SYSTEM/REAR (C69)

1.	9.211	**SUPPORT**, AUX EVAP BLO-LH	6273397
	9.211	**SUPPORT**, AUX EVAP BLO-RH	6273398
2.	8.977	**BOLT**, HEX W/FL WA (M6.3X1.81X20, PZOR)	22527475
3.	9.211	**BRACKET**, AUX EVAP PLT & HOSE	6273396
4.	8.927	**O-RING**, (.551 ID)	3094215
5.	8.927	**O-RING**, (.301 ID)	3093509
6.	9.211	**CLIP**, AUX EVAP PLT & HOSE BRKT	6273399
7.	8.977	**SCREW**, HWH TAP (M4.2X1.41X25)(10.783)	1640810
8.	2.559	**CLIP**, A.C. CONT & MDL WRG HARN EXT WIR	3848677
9.	N.S.	**WIRE**, A.C. CONT & MDL WRG HARN EXT (MAKE FROM 10 GAGE)	
10.	9.242	**BRACKET**, REFRIG HOSES RR PLR CVR UPR (W/YE9 ONLY)	14040866
11.	9.262	**COVER**, AUX REFRIG HOSES RR PLR (SLATE)(PAINT AS REQD)	14074369
12.	9.196	**BRACKET**, AUX EVAP & CMPR HOSE CVR (1985-88)	14066667
	16.575	**BRACKET**, AUX EVAP & CMPR HOSE CVR	3870575
13.	8.977	**SCREW**, HEX WA HD TAP (M4.2X1.41X10)	11503617
14.	9.242	**BRACKET**, REFRIG HOSES RR PLR CVR LWR (W/YE9 ONLY)	14040880
15.	9.225	**HOSE**, AUX A.C. EVAP (INCL #22)	15569000
16.	9.225	**HOSE**, AUX A.C. (CMPR HOSE ASM TO RR HOSE & PLT ASM)	15616198
17.	8.950	**CLIP**, (.69 & .56 OD)	338637
18.	8.950	**CLIP**, SPL (3.12X.94X1.06)	3825416
19.	8.900	**BOLT**, HEX (M10X1.5X35, 10.9 PS)	11513606
20.	8.931	**WASHER**, SPR LK (7/16X25/32X7/64, ZOR)	9439513
21.	9.226	**HOSE ASM**, A.C. CMPR (SEE CATALOG)	15568993
22.	8.927	**O-RING**, (.301X.070)	3093509
23.	8.927	**O-RING**, (.426X.070)	3094214
24.	2.559	**CLIP**, CMPR & CNDSR HOSE	340818
25.	9.190	**CONDENSER**, A.C.	3053293
26.	9.190	**INSULATOR**, CNDSR LWR MT	14028850
27.	9.190	**INSULATOR**, CNDSR UPR MT	14047837
28.	8.977	**SCREW**, HWH TAP (M6.3-1.69X20, ZC)	11503648
	8.929	**WASHER**, FL (M6.3X16.75X1.5, PH)	11500322
29.	9.225	**TUBE**, A.C. CNDSR (INCL #22,23)	15568999
30.	8.927	**SEAL**, (.676X.070)	3094216
31.	9.177	**CAP**, REFRIG CHRG VLV (3/8-24)(1990-91)	52451233
32.	9.275	**RESISTOR**, AUX BLO MTR	3929051
33.	9.276	**HARNESS**, A.C. MDL WRG	12041591
34.	8.965	**CONNECTOR**, A.C. CONT & MDL WRG HARN EXT	2984528
35.	9.242	**RETAINER**, AUX EVAP INL & OTLT HOSE & TUBE	14028805
36.	9.262	**SEAL**, AUX EVAP PLT & HOSE	328234
37.	9.225	**HOSE**, W/PLATE, AUX EVAP	14028801
38.	8.950	**CLIP**, SPL (3.12X.94X1.06)	3825416
39.	9.211	**SHROUD**, AUX EVAP BLO (BLUE)(PAINT AS REQD)	15601936
40.	9.786	**CLIP**, AUX A.C. AIR OTLT DEFL	328227
41.	8.977	**SCREW**, HWH TAP (M4.2X1.41X16, PZOR)	11509135
42.	9.211	**BRACKET**, AUX EVAP BLO SHRD MT	336476
43.	8.977	**SCREW**, PAN HD TORX TAP (M4.2X1.41X13)	11504646
	8.929	**WASHER**, FL (7/32X1/2X5/8, CAD)	
44.	9.260	**SEAL**, POLYURETHANE (59.50 X 1.25 X .75)(CUT AS REQD)	3999572
45.	9.211	**EVAPORATOR & BLO ASM** (*1)	
46.	9.264	**DEFLECTOR**, A.C. AIR OTLT	3979751
47.	9.786	**OUTLET**, AUX EVAP BLO SHRD CTR	336491
48.	8.948	**CLAMP**, WORM GEAR (.62 TO 1.25)	12337891
49.	N.S.	**TUBE**, AUX EVAP BLO SHRD DRN	

NOTE 1: SEE RESPECTIVE GROUP FOR DETAILED ILLUSTRATION.

RPO DEFINITIONS
YE9 - CONVENIENCE PKG, COMFORT & DECOR LEVEL #3

© 1990 GENERAL MOTORS SERVICE PARTS OPERATIONS—LIGHT TRUCK 52R

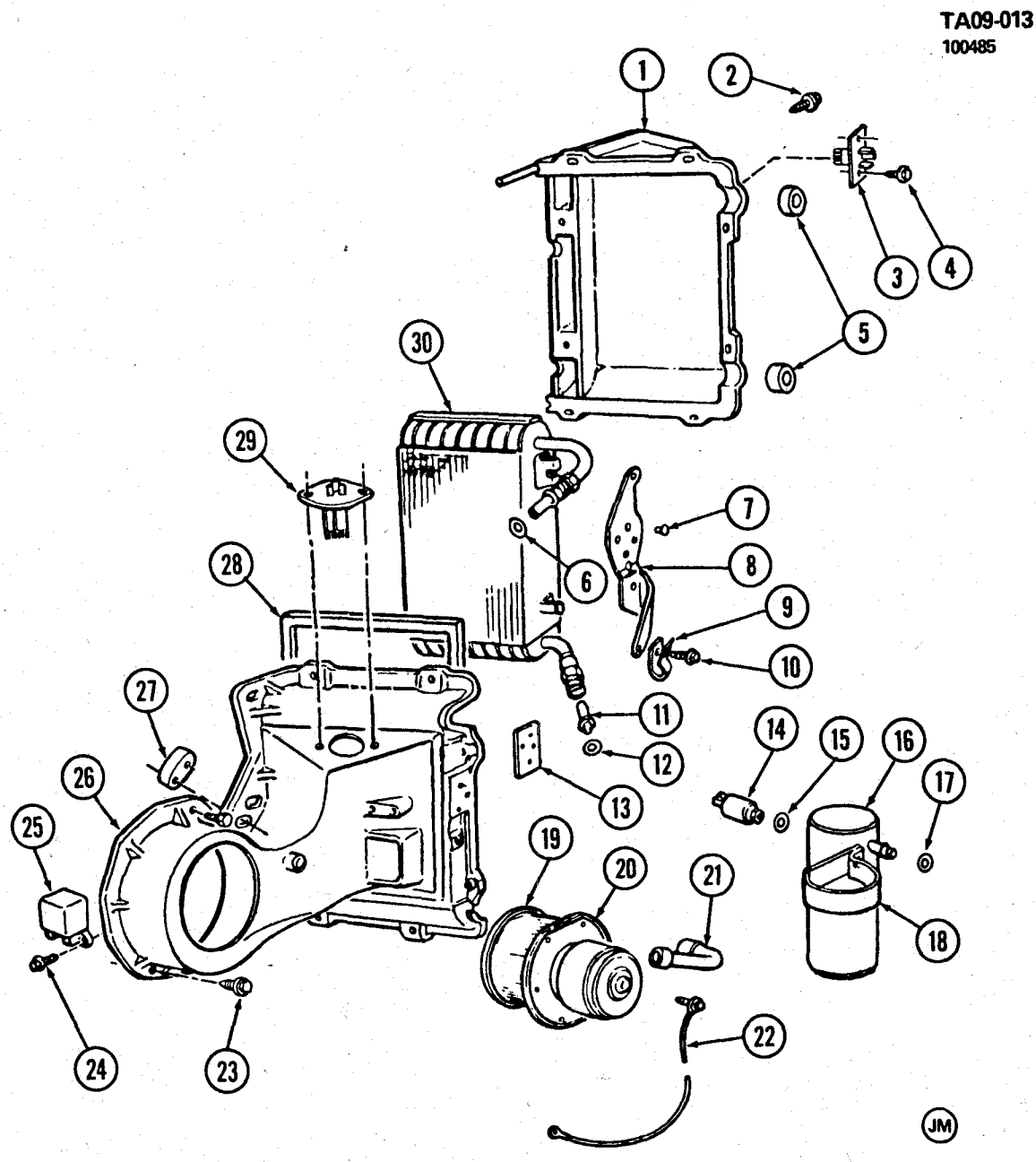

TA09-013

© 1990 GENERAL MOTORS SERVICE PARTS OPERATIONS—LIGHT TRUCK 52R

1985-1986 CK A/C EVAPORATOR ASM & BLOWER
1987-1991 RV A/C EVAPORATOR ASM & BLOWER

1.	9.211	**CASE**, OUTLET (W/C60)(INCL ITEM #8,13)	3058234
	9.211	**CASE**, OUTLET (W/C69)(INCL ITEM #8,13)	3090256
2.	8.977	**SCREW**, HEX WA HD TAP (M6.3X1.81X30 POR)	11508905
3.	9.275	**RESISTOR**, AUXILIARY BLOWER MOTOR (W/C69)	3929051
4.	8.977	**SCREW**, HEX WA HD TAP (#10-16X5/8")	11504005
5.	9.211	**SEAL**, FOAM (5.0X4.0X.38)	3039873
6.	8.927	**SEAL**, O-RING (.676"IDX.07 THK)	3094216
7.	N.S.	**RIVET**	
8.	N.S.	**BRACKET**, ACCUMULATOR DEHYDRATE (PART OF ITEM #1)	
9.	9.211	**CLAMP**, EVAPORATOR TUBE	3031728
10.	8.977	**SCREW**, HEX W/FL WA TAP (M4.2X1.41X16)	11509374
11.	9.213	**ORIFICE**, W/GASKET	3033879
12.	8.927	**O-RING**, NEOPRENE (RED)(1/2" FITTINGS-CAPTURED)	3093112
13.	9.211	**PLATE**, EVAPORATOR CASE BACKUP (ALSO PART OF ITEM #1)	3022672
14.	9.275	**SWITCH**, COMPRESSOR CUTOFF (INCL ITEM #15)	3041336
15.	8.927	**O-RING**, (.351X.072)(1985-87)	52450548
	8.927	**O-RING**, (.351X.072)(9.172)(1988-91)(PART OF #14)	52450548
16.	9.195	**ACCUMULATOR**, DEHYDRATE	3059314
17.	8.927	**O-RING**, NEOPRENE (RED)(3/4" FITTINGS-CAPTURED)	3093411
18.	9.196	**CLAMP**, ACCUMULATOR TO MOUNTING BRACKET	3054104
19.	9.216	**FAN**, BLOWER	3036721
20.	9.215	**MOTOR**, BLOWER	22020945
21.	8.859	**TUBE**, MOTOR COOLING	3037062
22.	9.215	**WIRE**, GROUND	3026183
23.	8.977	**SCREW**, HEX WA HD W/FL WA TAP (M6.3X1.81X25)	11505023
24.	8.977	**SCREW**, HEX WA HD TAP (M4.2X1.41X16)	11509374
25.	9.277	**RELAY**, A/C HI BLO CUTOUT	14036273
26.	9.211	**CASE**, INLET	3054314
27.	9.211	**SEAL**, EVAPORATOR CORE TUBE	6273327
28.	9.211	**SEAL**, EVAPORATOR CORE	3027167
29.	9.275	**RESISTOR**, BLOWER MOTOR	336403
30.	9.210	**CORE**, EVAPORATOR	3036687

RPO DEFINITIONS
C60 - HVAC SYSTEM, AIR CONDITIONER, FRT MAN CONTROLS
C69 - HVAC SYSTEM, AIR CONDITIONER ROOF MOUNTED

© 1990 GENERAL MOTORS SERVICE PARTS OPERATIONS—LIGHT TRUCK 52R

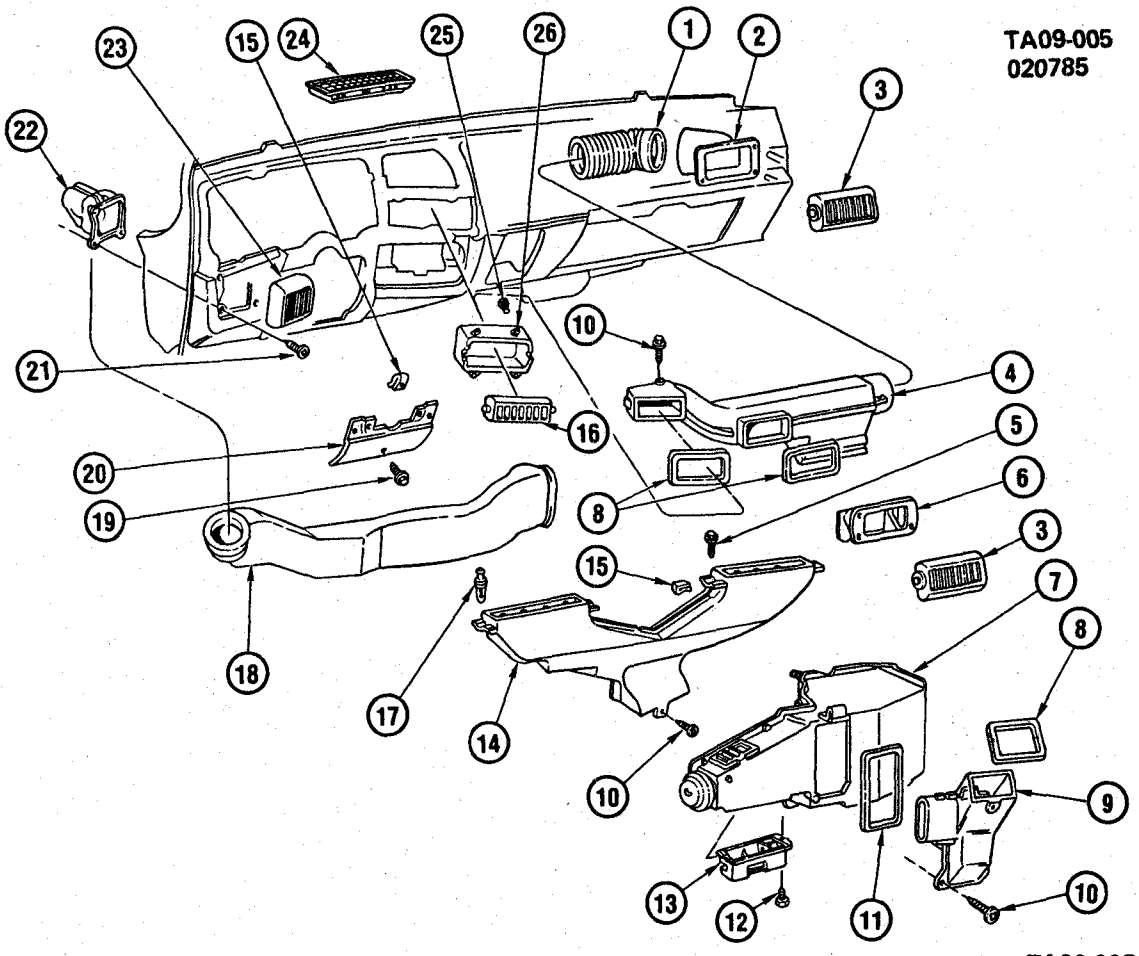

1985-1986 CK A/C AIR DISTRIBUTION SYSTEM/INSTRUMENT PANEL
1987-1991 RV A/C AIR DISTRIBUTION SYSTEM/INSTRUMENT PANEL

1.	9.260	**HOSE**, AIR (3 1/4X72)	1234988
2.	9.262	**DUCT**, OTR AIR OTLT-RH	14014538
3.	9.264	**DEFLECTOR**, OTR AIR OTLT	14014536
4.	9.262	**DUCT**, CTR AIR OTLT	14014556
5.	8.977	**SCREW**, HWH TAP (M4.2X1.41X16, PZOR)	11509135
6.	9.264	**DUCT**, CTR AIR OTLT	14014539
7.	8.845	**HEATER ASM** (*1)	
8.	9.262	**SEAL**, FOAM (1/2X.36X45 1/2)	363139
9.	9.262	**DUCT**, AIR DISTR LWR	6262679
10.	8.977	**SCREW**, HWH TAP (4.8X1.59X19)(2.560)	1640812
11.	9.262	**GASKET**, AIR DISTR DUCT (LWR)	3963784
12.	8.977	**SCREW**, HWH (5X.8X25, 9.8)	11509665
13.	9.786	**OUTLET**, HTR AIR	14013122
14.	9.779	**NOZZLE**, DEFR	14074319
15.	8.921	**NUT**, U SHAPE (M4.2X1.41-.065 TO 3/8 PNL)	52351724
16.	9.264	**DEFLECTOR**, A.C. AIR OTLT	3979751
17.	9.779	**RETAINER**, W/S DEFR NOZ	480534
18.	9.262	**DUCT**, OTLT-LH	15591175
19.	8.977	**BOLT**, HWH TAP (M4.2X1.41X16, POR)	11513932
20.	16.081	**FILLER**, I/P STRG COL LWR	6274970
21.	8.977	**SCREW**, HWH TAP (M4.2X1.41X13)	11509185
22.	9.262	**OUTLET**, OTR AIR OTLT-LH (INCL #23)	14014557
23.	N.S.	**DEFLECTOR**, AIR OTLT-LH (PART OF #22)	
24.	9.779	**GRILLE**, DEFR DUCT (PAINT AS REQD)	14064924
25.	8.977	**SCREW**, HEX HD W/FL WA (M4.2X1.41X16)	11509374
26.	9.262	**ADAPTER**, CTR AIR OTLT DUCT	6262684

NOTE 1: SEE RESPECTIVE GROUP FOR DETAILED ILLUSTRATION.

© 1990 GENERAL MOTORS SERVICE PARTS OPERATIONS—LIGHT TRUCK 52R

NOTES

BLANK PAGE

TA09-007
080588

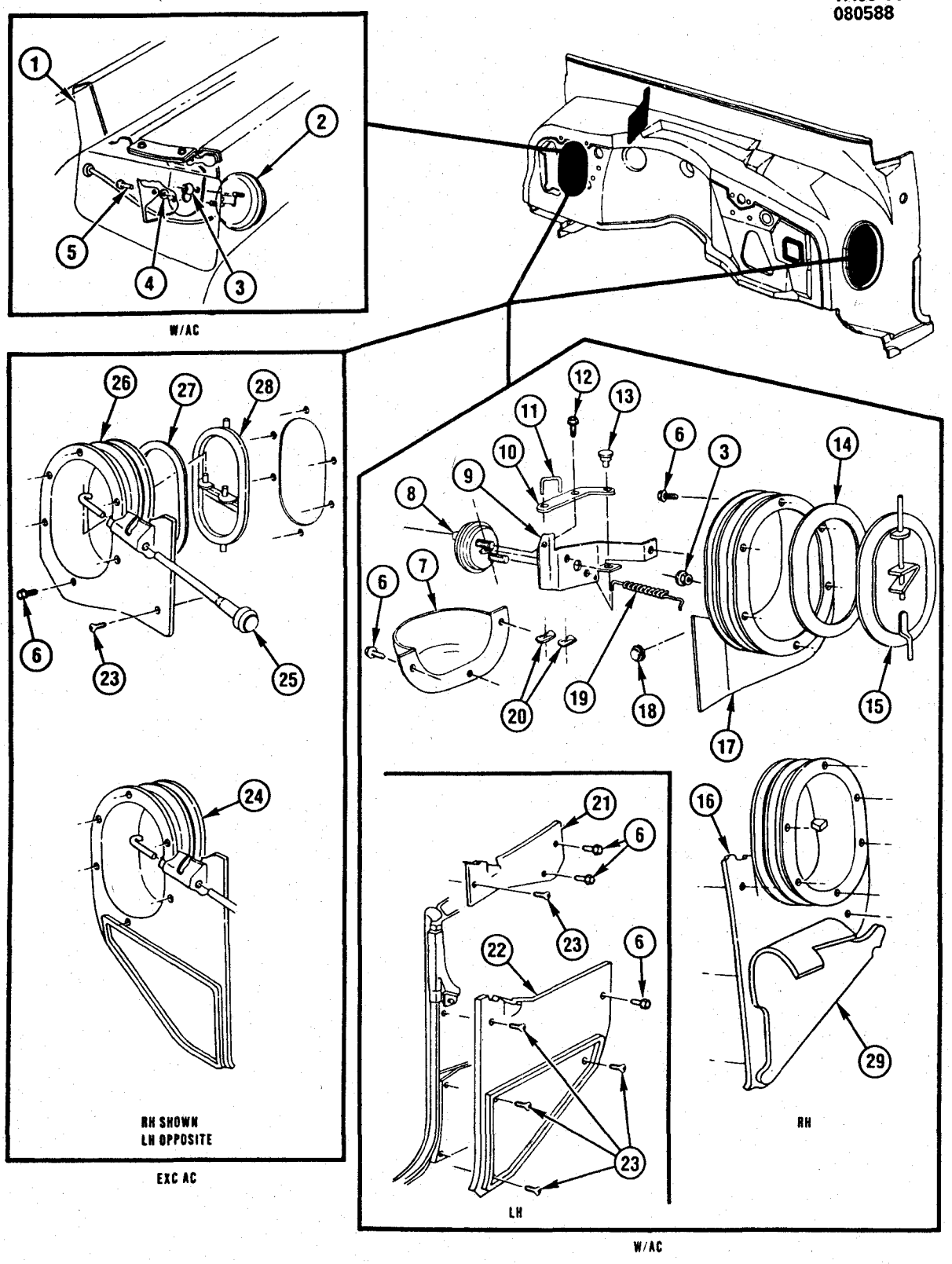

TA09-007

© 1990 GENERAL MOTORS SERVICE PARTS OPERATIONS—LIGHT TRUCK 52R

1985-1986 CK A/C AIR DISTRIBUTION SYSTEM/PLENUM
1987-1991 RV A/C AIR DISTRIBUTION SYSTEM/PLENUM

1.	9.262	**VALVE**, A.C. AIR SHUTOFF	15606307
2.	9.280	**ACTUATOR**, A.C. AIR SHUTOFF VLV VAC	1996732
3.	8.921	**NUT**, MET SKW FLG (M5X15, PHOS)	11501047
4.	8.921	**NUT**, RND FL PUSH-ON SP (6.4X14.75)	22527473
5.	9.786	**PIN**, A.C. AIR SHUTOFF VLV VAC ACTR	328280
6.	8.977	**SCREW**, HEX WA HD TAP (4.8X1.59X19)(2.560)	1640812
	8.929	**WASHER**, FLAT (5MM, PEOR)	11508426
7.	9.786	**BAFFLE**, AIR VENT VLV (CHARCOAL)(PAINT AS REQD)	14036918
8.	9.789	**ACTUATOR**, A.C. AIR RECRC VLV VAC	1996731
10.	9.276	**LEVER**, W/CAM A.C. AIR RECR VLV ACTR (INCL #13)	6258028
11.	9.786	**LINK**, A.C. AIR RECRC VLV	328244
12.	9.786	**SCREW**, A.C. AIR RECRC VLV	477376
13.	N.S.	**RIVET**, A.C. AIR RECRC VLV CAM (PART OF #10)	
14.	9.782	**SEAL**, AIR VENT VLV BZL (RH ONLY)	15593572
15.	9.789	**VALVE**, AIR VENT (RH ONLY)	459852
16.	9.782	**BEZEL**, AIR VENT VLV (W/YE9)(INCL #14)(RH ONLY)	15590428
17.	9.782	**HOUSING**, AIR VENT VLV (EXC YE9)(INCL #14)(RH ONLY)	15590406
18.	8.973	**PLUG**, BUTTON (7/16 HOLE, BRASS)	432430
19.	9.786	**SPRING**, A.C. RECRC VLV	3022829
20.	8.921	**NUT**, PUSH ON (6.4X14.75, PZOR)(2.575)	22527473
21.	9.782	**PANEL**, AIR VENT DR HOLE (EXC YE9)(PAINT AS REQD)	14032809
22.	9.782	**PANEL**, AIR VENT DR HOLE (W/YE9)(PAINT AS REQD)	14036923
23.	8.977	**SCREW**, HWH C/R TAP (M4.2X1.41X14, ZC)	11501866
24.	9.782	**BEZEL**, AIR VENT VLV-LH (W/YE9)(INCL #27)(PAINT)	15590427
	9.782	**BEZEL**, AIR VENT VLV-RH (W/YE9)(INCL #27)(PAINT)	15590428
25.	9.787	**CONTROL**, AIR VENT VLV	466717
26.	9.782	**HOUSING**, AIR VENT VLV-LH (EXC YE9)(INCL #27)(PAINT)	15590405
	9.782	**HOUSING**, AIR VENT VLV-RH (EXC YE9)(INCL #27)(PAINT)	15590406
27.	9.782	**SEAL**, AIR VENT VLV BZL-LH	15593573
	9.782	**SEAL**, AIR VENT VLV BZL-RH	15593572
28.	9.789	**VALVE**, AIR VENT	459851
29.	9.789	**INSULATOR**, (36X36)(12.980)	462233

RPO DEFINITIONS
YE9 - CONVENIENCE PKG, COMFORT & DECOR LEVEL #3

© 1990 GENERAL MOTORS SERVICE PARTS OPERATIONS—LIGHT TRUCK 52R

TA09-011
041290

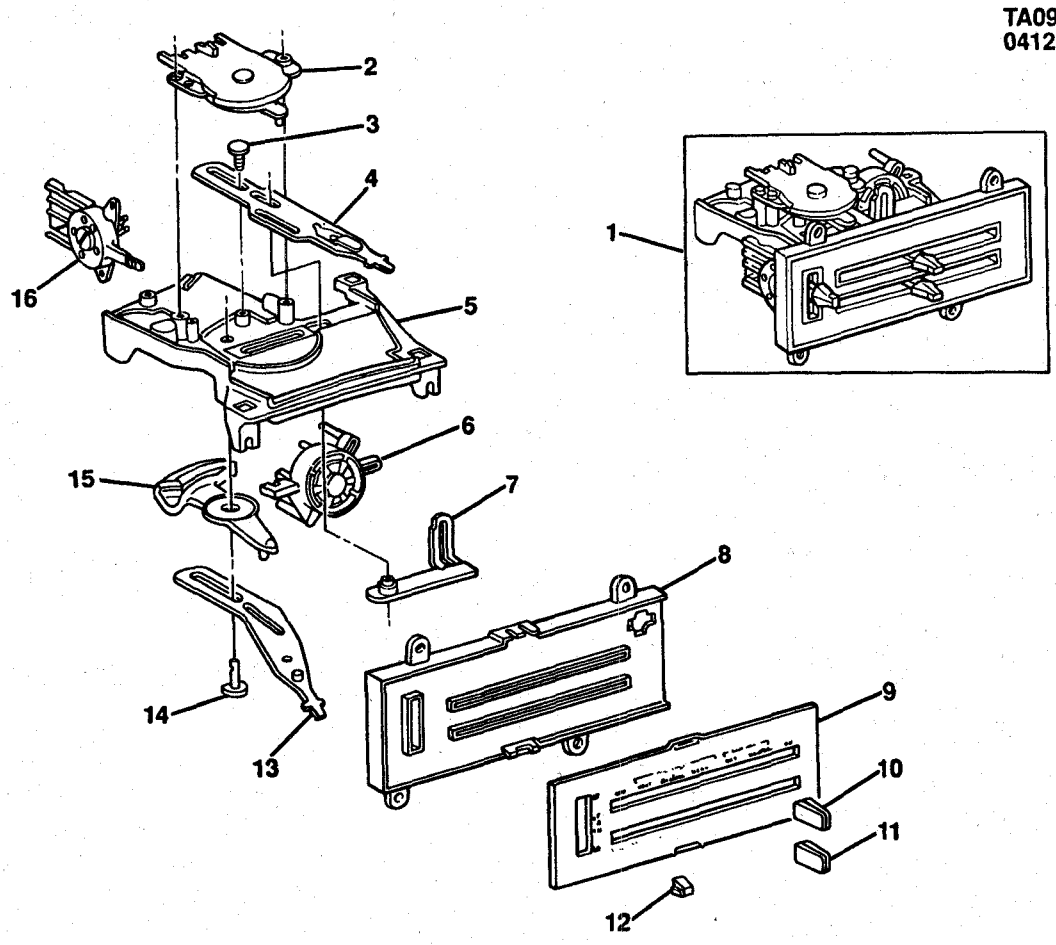

TA09-0115

1985-1986 CK A/C & HEATER CONTROL ASM
1987-1991 RV A/C & HEATER CONTROL ASM

NOTE: QUANTITY IS ONE PER ASSEMBLY UNLESS OTHERWISE SPECIFIED.

1.	9.273	**CONTROL ASSEMBLY**, HEATER & A/C (INCL ITEM #2-16)	16034591
2.	9.275	**SWITCH**, SELECT ROTARY	16001570
3.	N.S.	**PIN**, MODE LEVER PIVOT	
4.	N.S.	**LEVER**, MODE	
5.	N.S.	**HOUSING**, CONTROL	
6.	9.280	**VALVE**, VACUUM SELECT	16037769
7.	N.S.	**SLIDE**, VACUUM VAVLE	
8.	N.S.	**PLATE**, DIAL BACKING	
9.	9.279	**DIAL KIT**, HEATER & A/C CONTROL (INCL ITEM #10,11,12)	1226174
10.	8.852	**KNOB**, MODE LEVER(PART OF #9)	336406
11.	8.852	**KNOB**, TEMPERTURE LEVER(PART OF #9)	336406
12.	8.852	**KNOB**, BLOWER SWITCH(PART OF #9)	336406
13.	N.S.	**LEVER**, TEMPERTURE	
14.	N.S.	**PIN**, TEMPERTURE LEVER PIVOT	
15.	N.S.	**CAM**, TEMPERTURE CONTROL CABLE	
16.	9.275	**SWITCH**, BLOWER	16032480

© 1990 GENERAL MOTORS SERVICE PARTS OPERATIONS—LIGHT TRUCK 52R

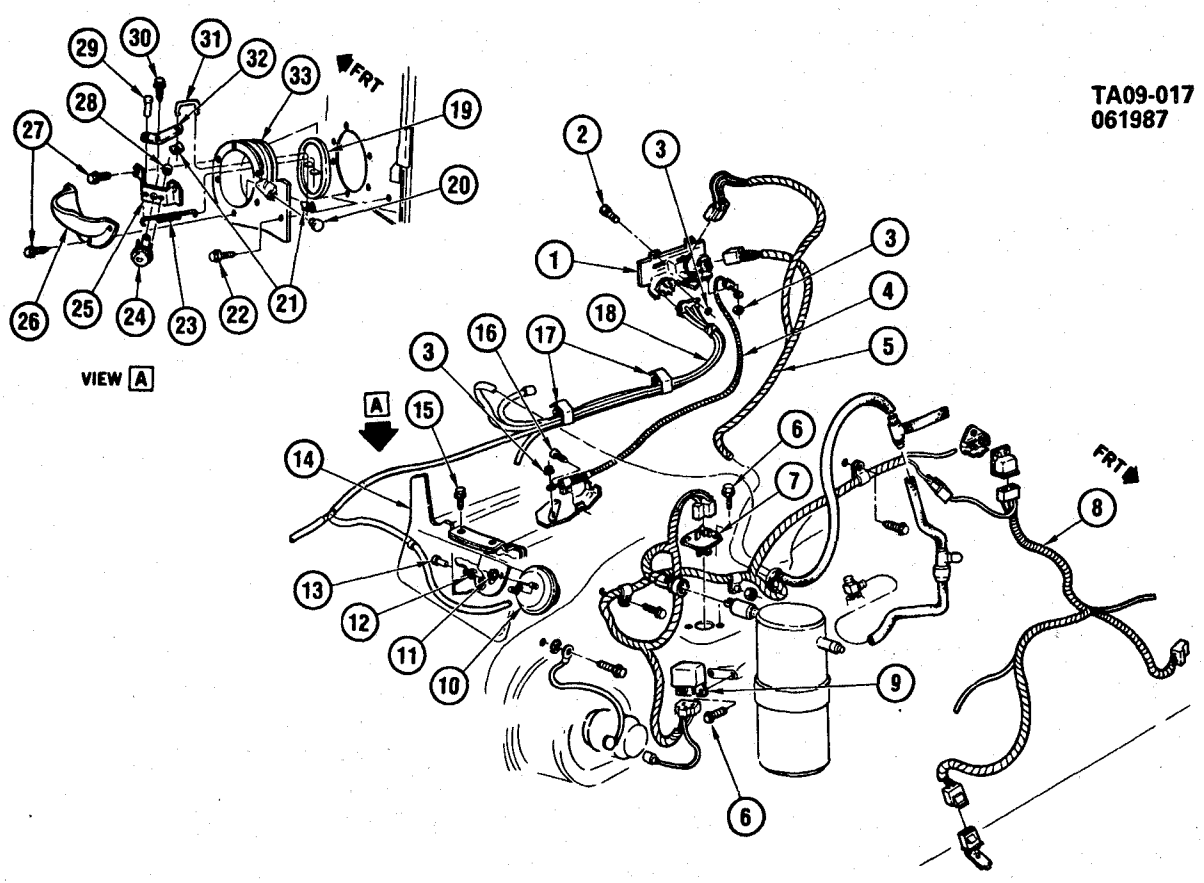

TA09-017

1985-1986 CK A/C CONTROL SYSTEM VACUUM & ELECTRICAL (C60)
1987-1991 RV A/C CONTROL SYSTEM VACUUM & ELECTRICAL (C60)

1.	9.273	**CONTROL**, HTR & A.C.(*1)	16034591
2.	8.977	**BOLT**, HWH TAP (M4.2X1.41X16, POR)	11513932
3.	8.921	**NUT**, PUSH ON (M3.6X11.23)	11501937
4.	9.787	**CABLE**, HTR & A.C. CONT	14047888
5.	9.276	**HARNESS**, A.C. WRG (1985-86)	12031347
	9.276	**HARNESS**, A.C. WRG(1987-91)	12054820
6.	8.977	**SCREW**, HEX W/FL WA TAP (M4.2X1.41X16)	11509374
7.	9.275	**RESISTOR**, BLO MTR	336403
8.	2.480	**HARNESS**, A.C. CONT & MDL WRG HARN EXT (SEE CATALOG)	
9.	9.277	**RELAY**, A.C. HI BLO CUTOUT	14036273
10.	9.280	**ACTUATOR**, O/S AIR VLV	1996732
11.	8.921	**NUT**, MET SKW FLG (M5X15, PHOS)	11501047
12.	8.921	**NUT**, PUSH-ON (6.4X14.75)(2.575)	22527473
13.	9.786	**PIN**, SHUTOFF VLV VAC ACTR	328280
14.	9.262	**VALVE**, AIR SHUTOFF	15606307
15.	8.977	**SCREW**, HWH TAP (M4.2X1.41X25)(10.783)	1640810
16.	8.977	**SCREW**, HWH TAP (M4.2X1.41X16, PZOR)	11509135
17.	9.281	**CLIP**, VAC CONT HOSE	15606408
18.	9.281	**HARNESS**, CONT VAC	15530547
19.	9.789	**VALVE**, AIR VENT	459852
20.	8.973	**PLUG**, BUTTON (7/16 HOLE, BRASS)	432430
21.	8.921	**NUT**, PUSH ON (6.4X14.75)(2.575)	22527473
22.	8.977	**SCREW**, OV HD C/R (M4.2X1.41X20)	11503537
23.	9.786	**SPRING**, RECRC VLV	3022829
24.	9.789	**ACTUATOR**, I/S AIR VLV	1996731
25.	9.276	**BRACKET**, AIR RECRC VLV ACTR(INCL # 29,32)	6273311
26.	9.786	**BAFFLE**, AIR VENT VLV (CHARCOAL)(PAINT AS REQ'D)	14036918
27.	8.977	**SCREW**, HEX W/FL WA TAP (M4.2X1.41X25)	11509121
28.	8.921	**NUT**, MET SKW FLG (M5X15, PHOS)	11501047
29.	N.S.	**RIVET** (PART OF #25)	
30.	9.786	**SCREW**, AIR RECRC VLV	477376
31.	9.786	**LINK**, AIR RECRC VLV	328244
32.	9.786	**LEVER**, AIR RECIRCULATING VALVE LINK	6258028
33.	9.782	**HOUSING**, AIR VENT VLV (PAINT AS REQ'D)	15590406

NOTE 1: SEE RESPECTIVE GROUP FOR DETAILED ILLUSTRATION.

© 1990 GENERAL MOTORS SERVICE PARTS OPERATIONS—LIGHT TRUCK 52R

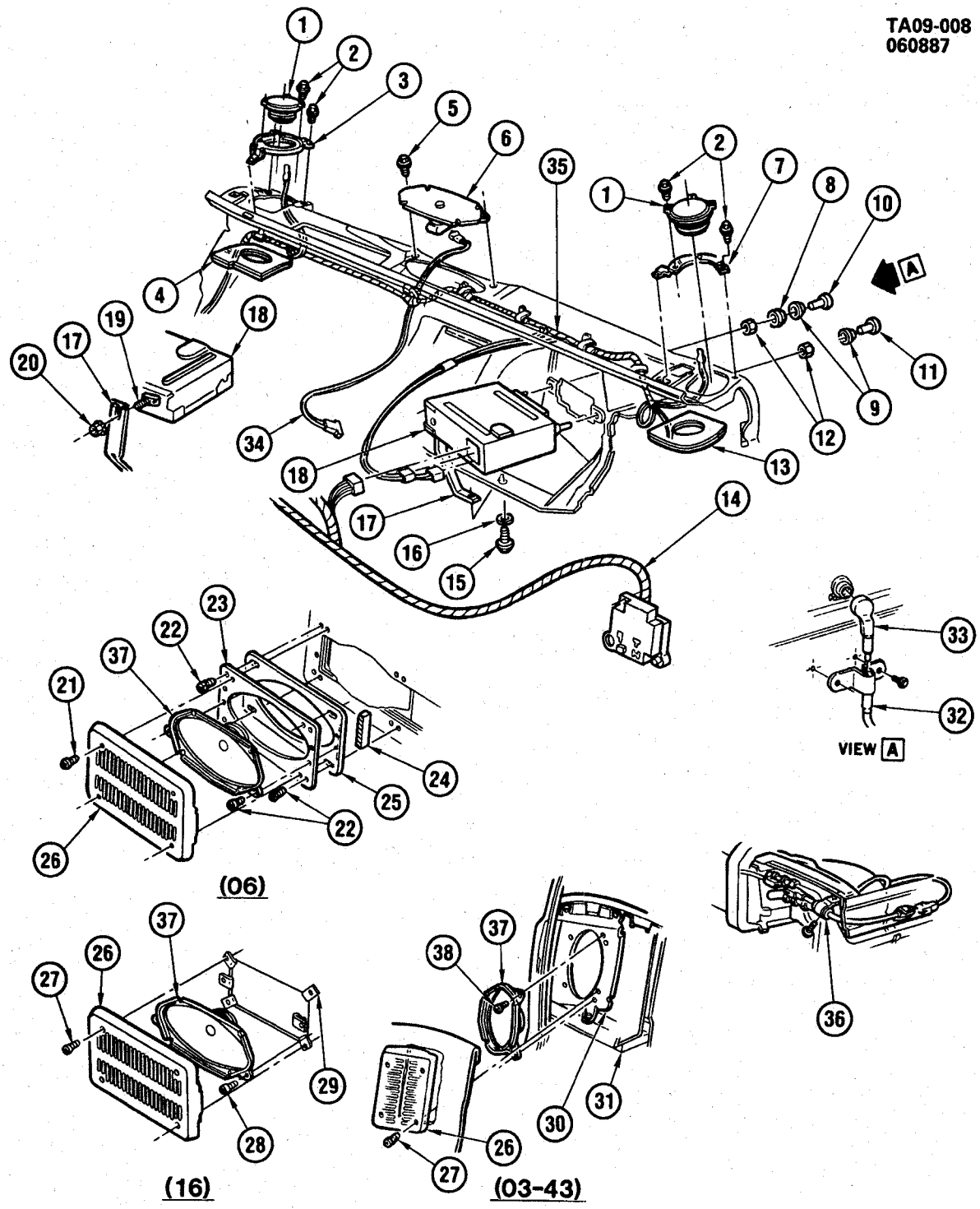

© 1990 GENERAL MOTORS SERVICE PARTS OPERATIONS—LIGHT TRUCK 52R

1985-1986 CK AUDIO SYSTEM
1987 RV AUDIO SYSTEM

1.	9.650	**SPEAKER**, DUAL FRONT	16040931
2.	8.977	**SCREW**, HEX WA HD TAP (M4.2X1.41X10)	11508887
3.	9.655	**BRACKET**, FRONT SPEAKER MOUNTING-RH	14023022
4.	9.655	**SEAL**, FRONT SPEAKER MOUNTING-RH	14023024
5.	8.977	**SCREW**, SPL HEX WA HD (M4.2X1.41X16)	11509135
6.	9.650	**SPEAKER**, FRONT CENTER	16040901
7.	9.655	**BRACKET**, FRONT SPEAKER MOUNTING-LH	14023021
8.	9.649	**SPACER**, DUMMY KNOB	469326
9.	9.649	**KNOB**, TONE CONTROL	469325
10.	9.649	**KNOB**, TUNING	469321
11.	9.649	**KNOB**, VOLUME	469323
12.	9.667	**NUT**, SPECIAL HEX (7/16"-28)	1225217
13.	9.655	**SEAL**, FRONT SPEAKER MOUNTING-LH	14023023
14.	2.480	**HARNESS**, I/P WIRING	
15.	8.977	**SCREW**, HWH TAP (M6.3X1.81X13) PZOR	11508797
16.	8.932	**WASHER**, LOCK EXT TOOTH (1/4")	121753
17.	9.667	**BRACKET**, RECEIVER	6270444
18.	9.650	**RECEIVER PKG** (SEE CATALOG)	
19.	9.667	**BOLT**, U NUT & STUD (M5X.8X10)(3.671)	12337892
20.	8.917	**NUT**, HEX FLG (M5X0.8)	11502702
	8.932	**WASHER**, EXT LOCK (M8.3X15)	11501869
21.	8.977	**SCREW**, OVAL HD C/R TAP (M4.2X1.41X25)	11504841
22.	8.977	**SCREW**, PAN HD C/R (M4.2X1.41X16)	11508947
23.	9.665	**PLATE**, SPEAKER MOUNTING	14013165
24.	N.S.	**SEAL**, SPEAKER	
25.	9.665	**GASKET**, SPEAKER (EXC YE9)	14014513
	9.650	**GASKET**, SPEAKER (W/YE9)	14047822
26.	9.665	**GRILLE**, SPEAKER (EXC YE9)(*1)	15623906
	9.665	**GRILLE**, SPEAKER (W/YE9)(*1)	15623908
27.	8.977	**SCREW**, OVAL HD C/R TAP (M4.2X1.41X35)	11504785
28.	8.977	**SCREW**, PAN HD C/R TAP (#8-18X7/8")	
29.	8.921	**NUT**, "U" (#8-18)	9431530
30.	9.665	**BRACKET**, REAR SPEAKER MOUNTING-LH	14014505
	9.665	**BRACKET**, REAR SPEAKER MOUNTING-RH	14014506
31.	9.665	**INSULATOR**, REAR SPEAKER	
32.	9.647	**CABLE**, ANT LEAD IN	6270654
33.	9.647	**CABLE**, W/S ANT	6270498
34.	9.656	**HARNESS**, RADIO FRONT SPEAKER	12012559
35.	9.656	**HARNESS**, STEREO RADIO (CK16/RV16)	12012687
	9.656	**HARNESS**, STEREO RADIO (CK03-06-43/RV03-06-43)	12026229
36.	9.663	**CAPACITOR**, A.C. BLOWER MOTOR (W/C69)	477371
37.	9.650	**SPEAKER**, REAR STEREO & REAR AUXILIARY	16040891
38.	8.977	**SCREW**, PAN HD C/R TAP (M4.2X1.41X16)	11504736

NOTE 1: PAINT AS REQUIRED.

RPO DEFINITIONS
C69 - HVAC SYSTEM, AIR CONDITIONER ROOF MOUNTED
YE9 - CONVENIENCE PKG, COMFORT & DECOR LEVEL #3

© 1990 GENERAL MOTORS SERVICE PARTS OPERATIONS—LIGHT TRUCK 52R

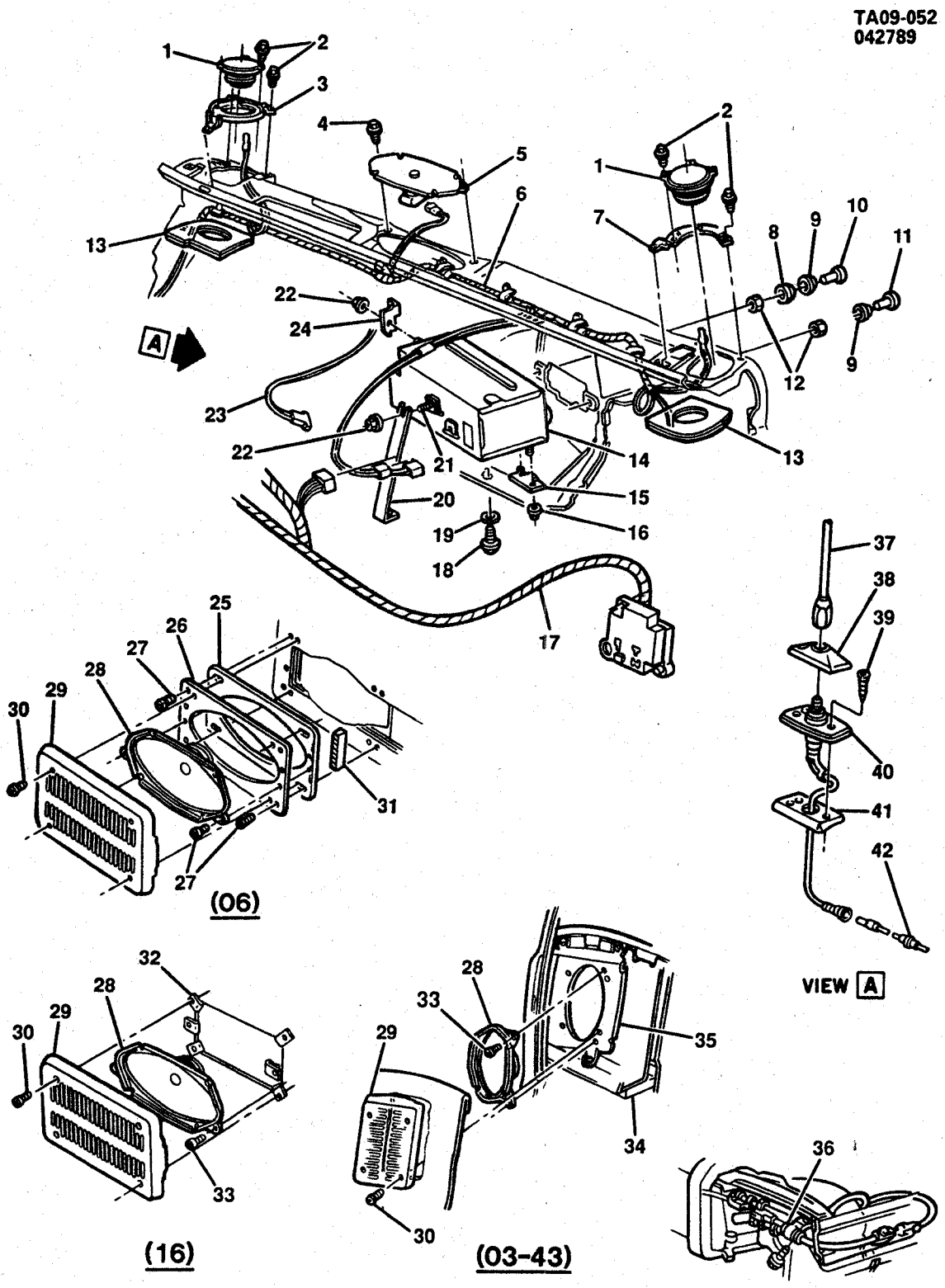
TA09-052
042789
1
2
3
4
5
6
7
8
9
10
11
12
13
14
15
16
17
18
19
20
21
22
23
24
A
25
26
27
28
29
30
31
(06)
32
33
(16)
34
35
(03-43)
36
37
38
39
40
41
42
VIEW A
TA09-052

1988-1991 RV AUDIO SYSTEM

NOTE: RPO DEFINITIONS:
NOTE: YE9 - CONVENIENCE PKG, COMFORT & DECOR LEVEL #3

1.	9.650	**SPEAKER**, DUAL FRONT	16040931
2.	8.977	**SCREW**, HEX LG WA HD (M4.2X1.41X10)	11503617
3.	9.655	**BRACKET**, FRONT SPEAKER MOUNTING-RH	14023022
4.	8.977	**BOLT**, HWH TAP (M4.2X1.41X16, POR)	11513932
5.	9.650	**SPEAKER**, FRONT CENTER(1988-89)	16040901
	9.650	**SPEAKER**,RDO FRT(OVAL (1990-91))(1990-91)RV1,2,3(UP7)	16040891
6.	9.656	**HARNESS**, STEREO RADIO (V 16)	12012687
	9.656	**HARNESS**,RDO FRT SPKR WRG((V 16))(1989-91)V1(16)(5R9)	12084092
	9.656	**HARNESS**, STEREO RADIO (RV 06)	12026229
	9.656	**HARNESS**,RDO FRT & RR SPKR WRG((RV 43))(1)(1991)RV3(43)(UP8)	12038006
7.	9.655	**BRACKET**, FRONT SPEAKER MOUNTING-LH	14023021
8.	9.649	**SPACER**, DUMMY KNOB (1988)	469326
9.	9.649	**KNOB**, TONE CONTROL (1988)	469325
10.	9.649	**KNOB**, TUNING (1988)	469321
11.	9.649	**KNOB**, VOLUME(1988)	469323
12.	9.667	**NUT**, RDO RCVR(1988)	1225217
13.	9.655	**SEAL**, FRONT SPEAKER MOUNTING-RH (1988)	14023024
14.	9.650	**RECEIVER PKG** (SEE CATALOG)	
15.	9.667	**BRACKET**, RDO MT LWR (1989-91)	15638270
16.	8.917	**NUT**, HEX FLG (M5X.8, ZC)	11502702
17.	2.480	**HARNESS**, I/P WIRING (SEE CATALOG)	
18.	8.977	**SCREW**, HWH TAP (M6.3X1.81X13) PZOR	11508797
19.	8.932	**WASHER**, EXT TOOTH LK (1/4)	121753
20.	9.667	**BRACKET**, RECEIVER (1988)	6270444
	9.667	**BRACE**, RADIO MT SUPT RR (1989-91)	15638259
21.	9.667	**BOLT**, U NUT & STUD (M5X.8X10)(3.671)	12337892
22.	8.917	**NUT**, HEX FLG (M5X0.8, ZC)	11502702
	8.932	**WASHER**, EXT TOOTH LK (M8X15X1.52, ZC)	11501869
23.	9.656	**HARNESS**, RADIO FRONT SPEAKER	12012559
24.	9.667	**BRACKET**, RDO MT SI (1989-91)	15609944
25.	9.665	**GASKET**, SPEAKER (EXC YE9)	14014513
	9.650	**GASKET**, SPEAKER (W/YE9)	14047822
26.	9.665	**PLATE**, SPEAKER MOUNTING	14013165
27.	8.977	**SCREW**, OVAL CNTRSUNK HD (M4.2X1.41X13, ZN)	20365263
28.	9.650	**SPEAKER**, REAR STEREO & REAR AUXILIARY	16040891
29.	9.665	**GRILLE**, SPEAKER (EXC YE9)(*1)	15623906
	9.665	**GRILLE**, SPEAKER (W/YE9)(*1)	15623908
30.	8.977	**SCREW**, OVAL HD C/R TAP (M4.2X1.41X25)	11501167
31.	N.S.	**SEAL**, SPEAKER	
32.	N.S.	**NUT**, TYPE P (M4.2X1.41)	
33.	8.977	**SCREW**, PAN HD CR REC TAP (8-18X.875)	9423131
34.	9.665	**INSULATOR**,RDO RR SPKR(1988-91)RV3(UP8,B30)	15591039
35.	9.665	**BRACKET**, REAR SPEAKER MOUNTING-LH	14014505
	9.665	**BRACKET**, REAR SPEAKER MOUNTING-RH	14014506
36.	9.663	**CAPACITOR**, A.C. BLOWER MOTOR (W/C69)	477371
37.	9.647	**ANTENNA**, W/TUBE, RDO (1989-90)	10149422
	9.647	**ANTENNA**,RDO(ANTENNA,FIXED (1991))(1)(1988-91)RV1,2,3	10136715
38.	9.647	**BEZEL**, RDO ANT (BLACK)(1989-91)	10045893
39.	8.977	**SCREW**, OV TR HD C/R (M4.2X1.41X16, PEOR)	11503446
40.	9.647	**CABLE**, RDO ANT (1989-91)	15562310
41.	9.647	**INSULATOR**, RDO ANT CBL (1989-91)	25514204
42.	9.647	**CABLE**, RDO ANT EXT (1989-91)	15569766

NOTE 1: PAINT AS REQUIRED.

RPO DEFINITIONS
B30 - CARPET,FLOOR AND WHEELHOUSE
UP7 - RADIO,PROVISIONS FOR MONAURAL INSTRUMENTATION
UP8 - RADIO,PROVISIONS FOR STEREO INSTRUMENTATION
5R9 - REAR SPEAKER SYSTEM DELETE

© 1990 GENERAL MOTORS SERVICE PARTS OPERATIONS—LIGHT TRUCK 52R

T9-29
021387

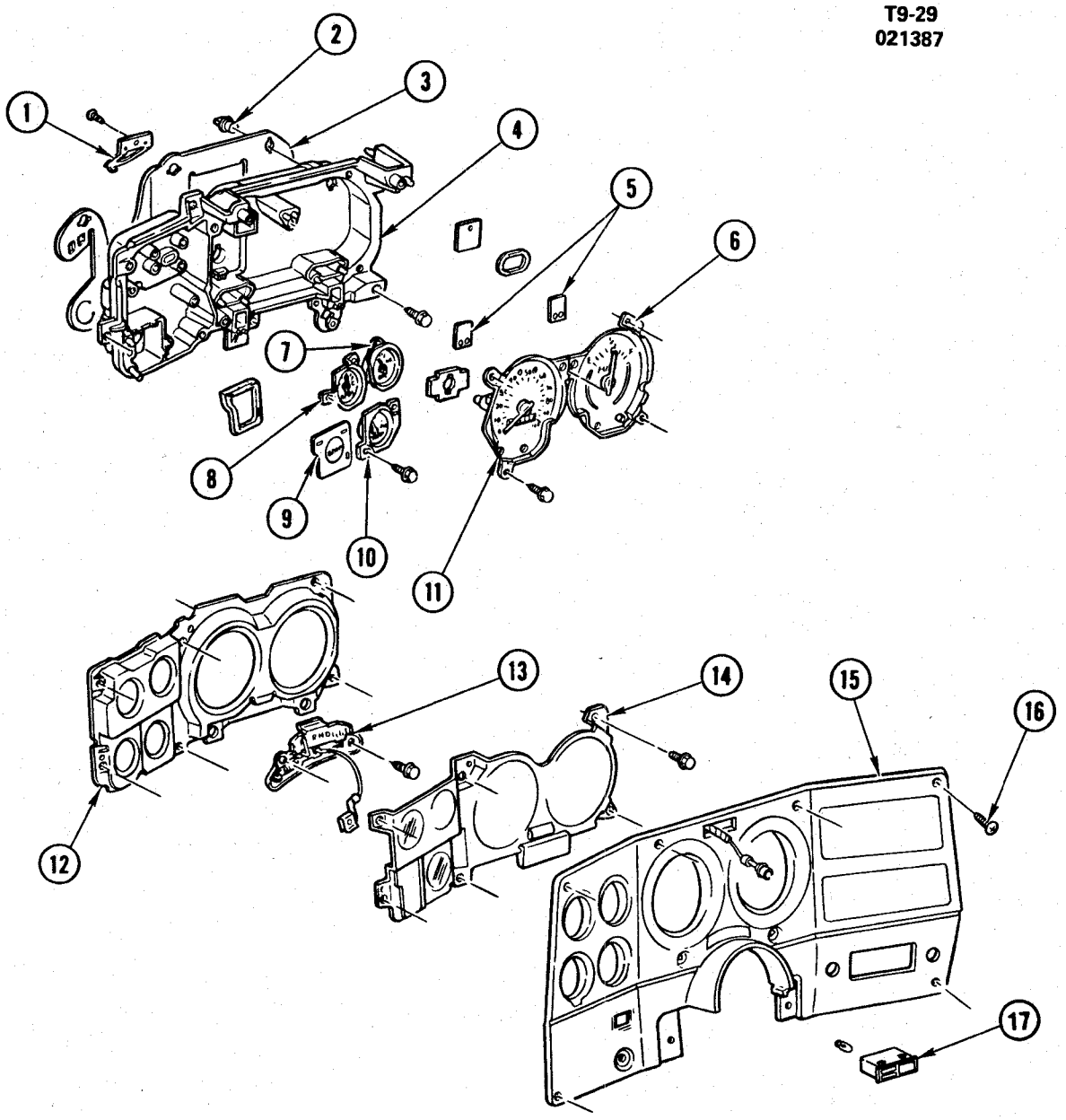

T9-29

© 1990 GENERAL MOTORS SERVICE PARTS OPERATIONS—LIGHT TRUCK 52R

1985-1986 CK CLUSTER ASM/INSTRUMENT PANEL
1987-1991 RV CLUSTER ASM/INSTRUMENT PANEL

1.	9.761	**CLIP**, SPEEDOMETER CABLE RETAINING	25016200
2.	8.965	**SOCKET**, INTERIOR LAMP	2973932
3.	9.744	**PRINTED CIRCUIT**, (EXC Z53 GAGES)(1985-87)	25053623
	9.744	**PRINTED CIRCUIT**, (W/Z53 GAGES)(1985-90)	25044897
	9.744	**PRINTED CIRCUIT**, (1990)	
4.	9.743	**CASE**, CLUSTER (EXC Z53)(1985-87)	25053622
	9.743	**CASE**, CLUSTER (W/U35 CLOCK)(1985-87)	25051839
	9.743	**CASE**, CLUSTER (W/U35)(1988)	25086601
	9.743	**CASE**, CLUSTER (W/Z53,EXC U35)(1985-90)	25086714
	9.772	**CLOCK**, (QUARTZ)(1985-88)	25080399
5.	9.748	**FILTER**, TELL TALE (DIRECTIONAL SIGNAL)	6497476
6.	3.108	**GAGE**, FUEL (1985-87)	6433366
	3.108	**GAGE**, FUEL (DIESEL)(1987-91)	6434048
	3.108	**GAGE**, (UNLEADED FUEL ONLY)(1987-91)	6434522
	3.108	**GAGE**, FUEL (REGULAR)(1988-91)	6433370
7.	1.803	**GAGE**, OIL PRESSURE (60 PSI)	25025563
	1.803	**GAGE**, OIL PRESSURE (80 PSI)	25025800
8.	2.515	**GAGE**, ELECTRICAL OUTPUT	6474584
9.	9.748	**FILTER**, TELL TALE (1985-89)	25076100
	9.748	**FILTER**, TELL TALE (1990)	16129017
	9.748	**FILTER**, TELL TALE (DIESEL)(1990)	16123573
10.	1.148	**GAGE**, TEMPERATURE (GAS)	25034232
	1.148	**GAGE**, TEMPERATURE (DIESEL)	8993982
11.	9.761	**HEAD**, SPEEDOMETER (1985-87)	25052373
	9.761	**HEAD**, SPEEDOMETER (1988-90)	25086684
12.	9.747	**RETAINER**, TELL TALE (EXC Z53)(1985-87)	6497471
	9.743	**RETAINER**, CLUSTER LENS (W/Z53,W/U35)(1985-88)	25022377
	9.747	**RETAINER**, CLUSTER LENS (W/Z53,EXC U35)	25022378
13.	4.020	**INDICATOR**, SHIFT (W/A/TRNS M40)	25078571
	4.020	**INDICATOR**, SHIFT (W/A/TRNS MD8)	25078572
	4.022	**SPRING**, SHIFT INDICATOR (W/A/TRNS M40,MD8)	8985418
	4.020	**POINTER**, SHIFT INDICATOR (W/A/TRNS M40,MD8)	25023641
	4.020	**CABLE**, SHIFT INDICATOR (W/CLIP)(W/A/TRNS M40,MD8)	25078578
14.	9.748	**LENS**, CLUSTER (EXC Z53)(1985-87)	25017376
	9.748	**LENS**, CLUSTER (W/U35)(1985-87)	25044306
	9.748	**LENS**, CLUSTER (W/Z53,EXC U35)(1985-87)	25017377
	9.748	**LENS**, CLUSTER CLOCK & TRIP (1988)	16130345
	9.748	**LENS**, CLUSTER TRIP (1988-90)	25086641
15.	9.743	**PLATE**, INSTRUMENT PANEL CLUSTER TRIM	
16.	8.977	**SCREW** (#8-18X1 1/8 INCH)	
17.	9.765	**INDICATOR**, CHECK ENGINE	14040867
18.	9.735	**CLUSTER**, INSTRUMENT (1989)	25086197
	9.735	**CLUSTER**, INSTRUMENT (1990 6.2C,J,Z49 EXC U18)	16127115
	9.735	**CLUSTER**, INSTRUMENT (1990 5.7K,7.4N,Z49 EXC U18)	16127125

RPO DEFINITIONS
MD8 - TRANSMISSION, AUTO 4 SPD, THM 700 R4
M40 - TRANSMISSION, AUTO 3 SPD, TORQUE CONV, VAR 1
U35 - CLOCK, ELECTRIC
Z53 - GAUGE PKG, VOLTOMETER, OIL PRESSURE & TEMO

© 1990 GENERAL MOTORS SERVICE PARTS OPERATIONS—LIGHT TRUCK 52R

TX09-102
081090

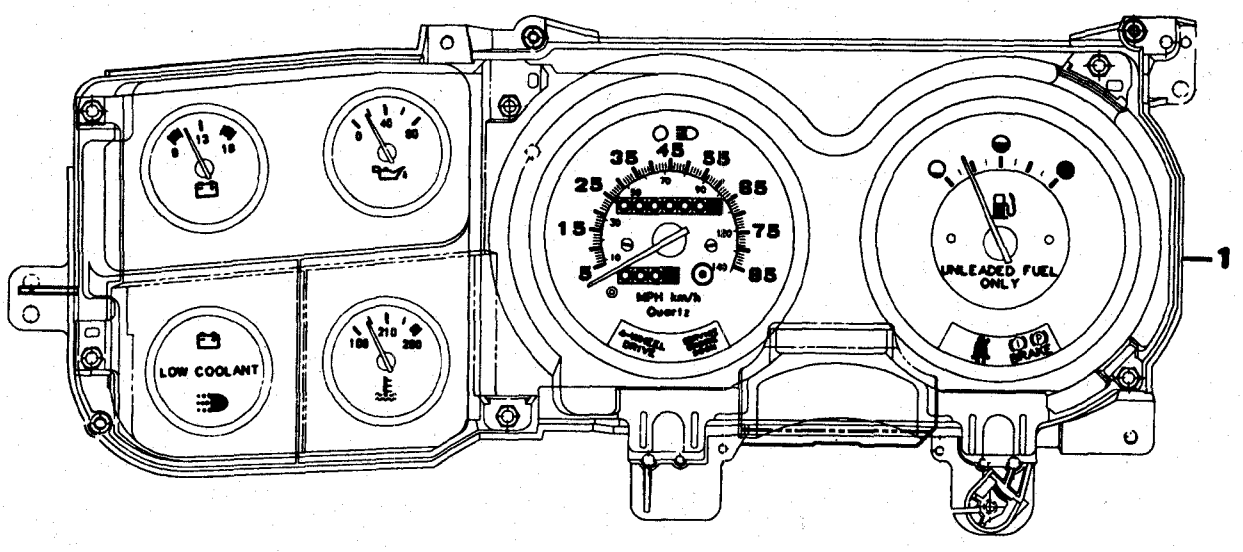

TX09-102

1990-1991 RV CLUSTER ASM/INSTRUMENT PANEL

1.	9.735	**CLUSTER**, INSTRUMENT (5.7K,6.2J EXC U18,Z49)	25088289
	9.735	**CLUSTER**, INSTRUMENT (1990 6.2C,J EXC U18,Z49)	25088290
	9.735	**CLUSTER**, INSTRUMENT (5.7K,7.4N,Z49 EXC U18)	25088292
	9.735	**CLUSTER**, INSTRUMENT (1990 6.2C,J,Z49 EXC U18)	25088293
	9.735	**CLUSTER**, INSTRUMENT (5.7K,7.4N,U18)	25088294
	9.735	**CLUSTER**, INSTRUMENT (1990 6.2C,J,U18)	25088295
	9.735	**CLUSTER**,INST (1991 6.2L EXC U18,Z49)	16153525
	9.735	**CLUSTER**,INST (1991 6.2L,Z49 EXC U18)	16153535
	9.735	**CLUSTER**,INST (1991 6.2L,U18)	16153545
	9.744	**CLIP**, INSTRU CLUSTER	8986000
	9.744	**LAMP**, INSTRU CLUSTER	25089349
	9.744	**LAMP**, INSTRU CLUSTER	25089350
	9.765	**LAMP**, W/SOCKET, INSTRU CLUSTER	25085970
	9.748	**LENS**, TRIP ODOM	25086641

RPO DEFINITIONS
U18 - KILOMETER SPEEDO (EXPORT)
Z49 - BASE EQUIP MODIF

© 1990 GENERAL MOTORS SERVICE PARTS OPERATIONS—LIGHT TRUCK 52R

T16-116

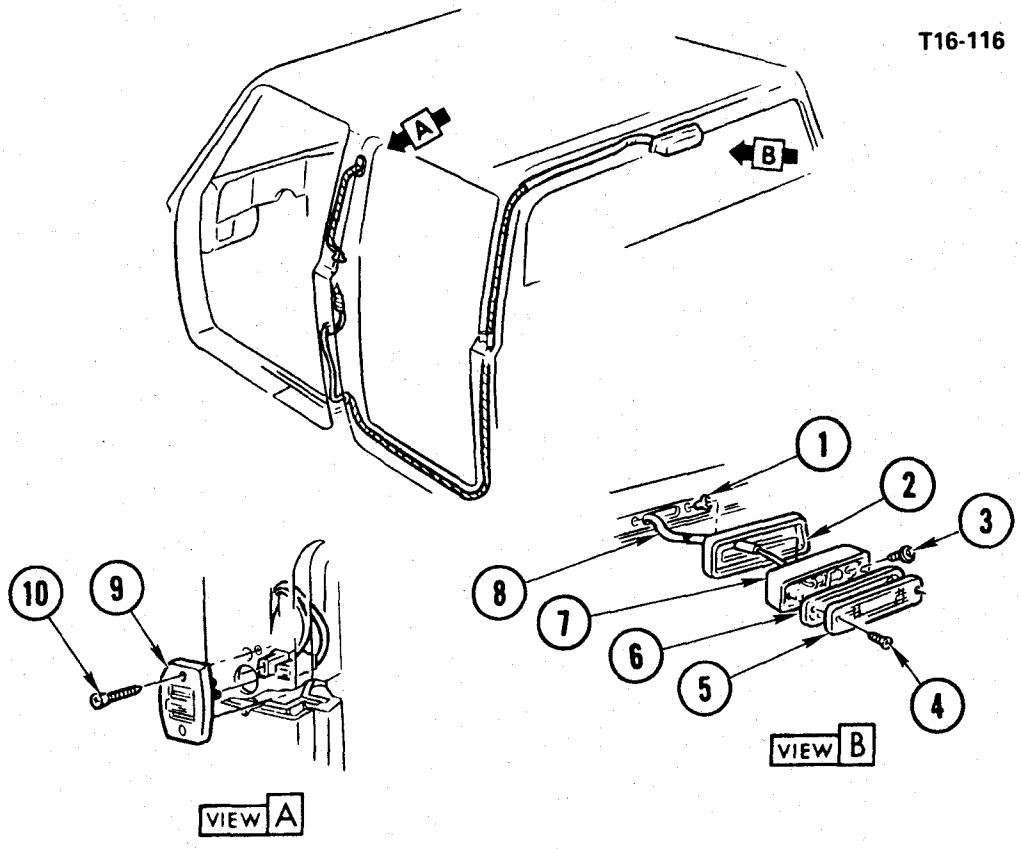

T16-116 5

1985-1986 CK(03-43) LAMP/CARGO
1987-1991 RV(03-43) LAMP/CARGO

1.	9.988	**NUT**, CARGO LAMP (1985-87)	3876130
	1.269	**NUT**, CARGO LAMP (9.988)	1494257
2.	9.988	**SEAL**, LAMP MT	6270662
3.	8.913	**SCREW**, PAN HD C/R MA (10-24X.75)	9422540
4.	8.977	**SCREW**, PAN HD TORX TAP (M4.2X1.41X25, SS)	11504661
5.	9.988	**LENS**, CARGO LP	5969836
6.	9.988	**GASKET**, CARGO LP LENS	5965875
7.	9.988	**HOUSING**, CARGO LP	5965872
8.	9.988	**WIRE**, CARGO LP (03)(1985-89)	8906028
	9.988	**WIRE**, CARGO LP (43)(1985-91)	8913238
9.	9.988	**SWITCH ASM**, CARGO LP	339880
10.	8.977	**SCREW**, OV HD C/R TAP (M4.2-1.41X25)	11501167

© 1990 GENERAL MOTORS SERVICE PARTS OPERATIONS—LIGHT TRUCK 52R

NOTES

BLANK PAGE

GROUP 16.000

ILLUSTRATION INDEX

	TITLE	PAGE
1988	R TRIM PANEL-BODY STYLE (W/YE9)	16-1
1985-1986	CK WIPER MOTOR/WINDSHIELD	16-2
1987-1991	RV WIPER MOTOR/WINDSHIELD	16-2
1985-1986	CK WIPER SYSTEM/WINDSHIELD	16-5
1987-1991	RV WIPER SYSTEM/WINDSHIELD	16-5
1985-1986	CK MIRROR/EXTERIOR (SENIOR WEST COAST DG5)	16-6
1987-1991	RV MIRROR/EXTERIOR (SENIOR WEST COAST DG5)	16-6
1985-1986	CK MIRROR/EXTERIOR (W/DF2 CAMPER)	16-8
1987-1991	RV MIRROR/EXTERIOR (W/DF2 CAMPER)	16-8
1985-1986	CK MIRROR/EXTERIOR (STANDARD)	16-9
1987	RV MIRROR/EXTERIOR (STANDARD)	16-9
1987-1991	RV MIRROR/EXTERIOR (W/D44,D45)	16-10
1985-1986	CK SUNSHADE	16-11
1987-1991	RV SUNSHADE	16-11
1989-1991	RV SUNSHADE W/SILVERADO/SIERRA (YE9)	16-12
1985-1986	CK INSTRUMENT PANEL & RELATED PARTS	16-15
1987-1991	RV INSTRUMENT PANEL & RELATED PARTS	16-15
1987-1991	RV DOOR HARDWARE/SIDE FRONT	16-19
1985-1986	CK DOOR TRIM/SIDE FRONT	16-23
1987-1991	RV DOOR TRIM/SIDE FRONT	16-23
1985-1986	CK(06-43) DOOR HARDWARE/SIDE REAR	16-25
1987-1991	RV(06-43) DOOR HARDWARE/SIDE REAR	16-25
1985-1986	CK(06) DOOR HARDWARE & TRIM/SIDE REAR	16-29
1987-1990	RV(06) DOOR HARDWARE & TRIM/SIDE REAR	16-29
1985-1986	CK(06-43) DOOR TRIM/SIDE REAR	16-31
1987-1991	RV(06-43) DOOR TRIM/SIDE REAR	16-31
1985-1986	CK(06) DOOR HARDWARE/REAR	16-35
1987-1991	RV(06) DOOR HARDWARE/REAR	16-35
1985-1986	CK POWER WINDOW & DOOR LOCK SYSTEM	16-37
1987-1991	RV POWER WINDOW & DOOR LOCK SYSTEM	16-37
1985-1986	CK(03-43) WINDOWS (REAR)	16-38
1987-1991	RV(03-43) WINDOWS (REAR)	16-38
1988-1990	RV(06) WINDOWS-BODY SIDE	16-39
1988-1991	RV(06) WINDOWS	16-40
1985-1986	CK(03-43) WINDSHIELD & WINDOWS REAR	16-41
1987-1990	RV(03-43) WINDSHIELD & WINDOWS REAR	16-41
1985-1986	CK(03) LAMP/DOME	16-42
1987-1989	RV(03) LAMP/DOME	16-42
1985-1986	CK(06) LAMP/DOME	16-43
1987-1991	RV(06) LAMP/DOME	16-43
1985-1986	CK(16-43) LAMP/DOME	16-44
1987-1991	RV(16-43) LAMP/DOME	16-44
1989-1991	RV(06) LAMP/DOME & READING LAMP (W/A52,TR9)	16-45
1985-1986	CK(43) SHEET METAL/BODY	16-47
1987-1991	RV(43) SHEET METAL/BODY	16-47
1985-1986	CK(06) SHEET METAL/BODY	16-49
1987-1991	RV(06) SHEET METAL/BODY	16-49
1985-1986	K(16) SHEET METAL/BODY	16-53
1987-1991	V(16) SHEET METAL/BODY	16-53
1985-1986	CK(03) SHEET METAL/BODY SIDE & ROOF	16-55
1987-1989	RV(03) SHEET METAL/BODY SIDE & ROOF	16-55
1989-1991	RV(06) TRIM/INTERIOR	16-57
1985-1986	K(16) TOP/REMOVABLE	16-59
1987-1991	V(16) TOP/REMOVABLE	16-59
1985-1986	CK MOLDINGS/ROOF DRIP	16-63
1987-1991	RV MOLDINGS/ROOF DRIP	16-63
1985-1986	CK COMPARTMENT/SEAT SEPARATOR	16-64
1987-1991	RV COMPARTMENT/SEAT SEPARATOR	16-64
1988-1991	RV SEAT ASM/FRONT BUCKET (W/6K6,6K8)	16-67

© 1990 GENERAL MOTORS SERVICE PARTS OPERATIONS—LIGHT TRUCK 52R

ILLUSTRATION INDEX

	TITLE	PAGE
1989-1991	RV SEAT ASM/FRONT BUCKET (A95)	16-69
1985-1986	CK SEAT ASM/BUCKET (A95)	16-71
1987-1988	RV SEAT ASM/BUCKET (A95)	16-71
1985-1986	K(16) SEAT ASM/BUCKET (AV5)(1ST DES)	16-73
1986	K(16) SEAT ASM/BUCKET (AV5)(2ND DES)	16-75
1987-1991	V(16) SEAT ASM/BUCKET (AV5)	16-75
1985-1986	CK(06-43) SEAT ASM/FRONT BENCH (A52)	16-77
1987-1991	RV(06-43) SEAT ASM/FRONT BENCH (A52)	16-77
1985-1986	CK(03) SEAT ASM/BENCH (A52)	16-79
1987-1989	RV(03) SEAT ASM/BENCH (A52)	16-79
1985-1986	CK(43) SEAT ASM/REAR BENCH (AS3)	16-81
1987-1991	RV(43) SEAT ASM/REAR BENCH (AS3)	16-81
1985-1986	CK(06) SEAT ASM/REAR BENCH (W/REAR BENCH,REMOVABLE AS3)	16-82
1987-1991	RV(06) SEAT ASM/REAR BENCH (W/REAR BENCH,REMOVABLE AS3)	16-82
1985-1986	K(16) SEAT ASM/REAR FOLDING (AM7)	16-85
1987-1991	V(16) SEAT ASM/REAR FOLDING (AM7)	16-85
1985-1986	CK(06) SEAT BOTTOM & RELATED PARTS (W/AT5)	16-87
1987-1991	RV(06) SEAT BOTTOM & RELATED PARTS (W/AT5)	16-87
1985-1986	CK(06) SEAT BACK & RELATED PARTS (W/AT5)	16-89
1987-1989	RV(03) SEAT BELTS	16-91
1987-1989	RV(43) SEAT BELTS	16-93
1990	RV(06) SEAT BELTS & RELATED PARTS	16-95
1990	RV(43) SEAT BELTS & RELATED PARTS	16-97
1991	RV (43) SEAT BELTS & RELATED PARTS	16-99
1991	RV(06) SEAT BELTS & RELATED PARTS	16-101
1991	V(16) SEAT BELTS	16-103
1987-1989	RV(06) SEAT BELTS-INTERMEDIATE SEAT (W/AT5)	16-104
1989-1990	V(16) SEAT BELTS-BENCH SEAT W/3 POINT SHOULDER RESTRAINT SYSTEM (AK9)	16-107
1985-1986	CK(03) MOLDINGS/GARNISH & ROOF TRIM	16-108
1987-1989	RV(03) MOLDINGS/GARNISH & ROOF TRIM	16-108
1985-1986	CK(43) MOLDINGS/GARNISH & ROOF TRIM	16-109
1987-1991	RV(43) MOLDINGS/GARNISH & ROOF TRIM	16-109
1985-1986	CK(06) MOLDINGS/GARNISH & ROOF TRIM	16-111
1987-1991	RV(06) MOLDINGS/GARNISH & ROOF TRIM	16-111
1985-1986	K(16) MOLDINGS/GARNISH & ROOF TRIM	16-113
1987-1991	V(16) MOLDINGS/GARNISH & ROOF TRIM	16-113
1989-1991	RV(06) CONSOLE/ROOF W/FRONT HIGH BACK BUCKET SEATS (A95)	16-115
1988-1991	RV INSULATION/DASH PANEL (LH6/6.2C,LL4/6.2J)	16-117
1985-1986	CK(43) FLOOR COVERING & SILL PLATES	16-118
1987-1991	RV(43) FLOOR COVERING & SILL PLATES	16-118
1985-1986	CK(06) FLOOR COVERING & SILL PLATES	16-119
1987-1991	RV(06) FLOOR COVERING & SILL PLATES	16-119
1985-1986	CK(03) FLOOR COVERING & SILL PLATES	16-120
1987-1989	RV(03) FLOOR COVERING & SILL PLATES	16-120
1985-1986	K(16) FLOOR COVERING & SILL PLATES	16-123
1987-1990	V(16) FLOOR COVERING & SILL PLATES	16-123

© 1990 GENERAL MOTORS SERVICE PARTS OPERATIONS—LIGHT TRUCK 52R

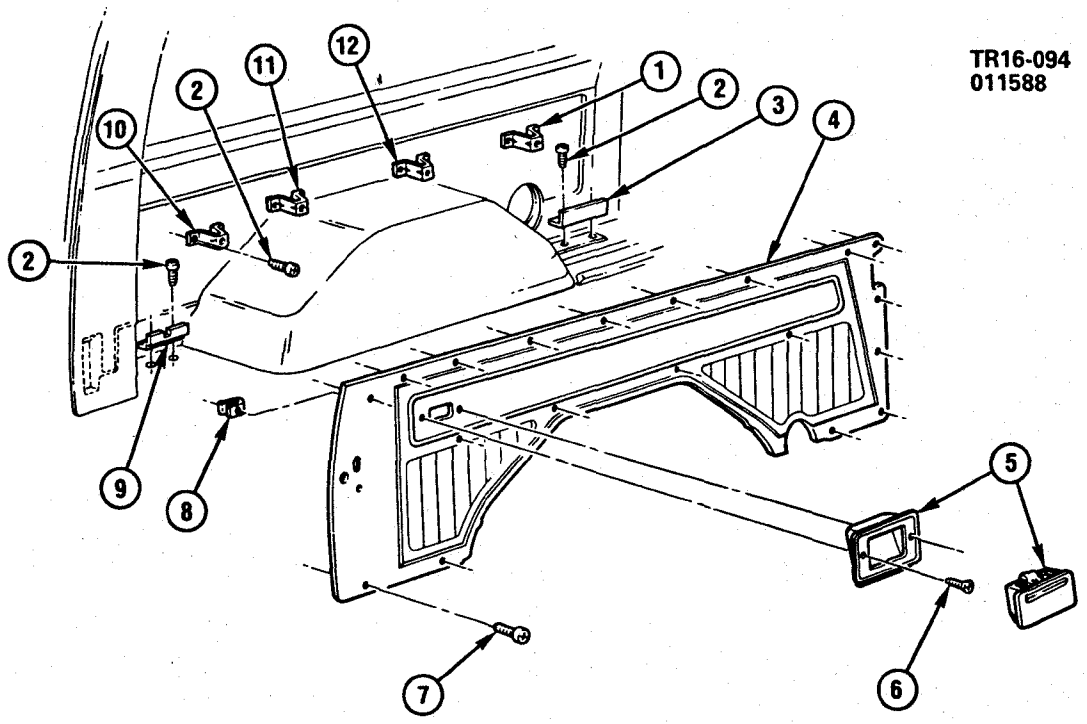

TR16-094

1988 R TRIM PANEL-BODY STYLE (W/YE9)

1.	16.575	**SUPPORT**, BODY SI TR PNL UPR RR	
2.	8.977	**SCREW**, HEX LG WA HD W/SLR (M4.2-1.41X10)	11503617
3.	16.575	**BRACKET**, BODY SI TR PNL LWR (RR OF W/H)	3870575
4.	16.575	**PANEL**, BODY SI TR (BLUE)-LH(*1)	14027571
5.	16.120	**ASHTRAY**, CTR SEAT	9876569
6.	8.977	**SCREW**, OV HD CR REC (M4.2X1.41X13)	11501133
7.	8.977	**SCREW**, OV HD C/R TAP CB (M4.2-1.41X10)	11501165
8.	8.921	**NUT**, U-SHAPED (M4.2X1.41)	11509755
9.	16.575	**SUPPORT**, BODY SI TR PNL LWR (FRT OF W/H)	467294
10.	16.575	**SUPPORT**, BODY SI TR PNL UPR (FRT OF W/H)	473189
11.	16.575	**SUPPORT**, BODY SI TR PNL UPR FRT CTR	473190
12.	16.575	**SUPPORT**, BODY SI TR PNL UPR RR CTR	473191

NOTE 1: FOR ADDITIONAL COLORS SEE CATALOG.(GROUP 16.575)

© 1990 GENERAL MOTORS SERVICE PARTS OPERATIONS—LIGHT TRUCK 52R

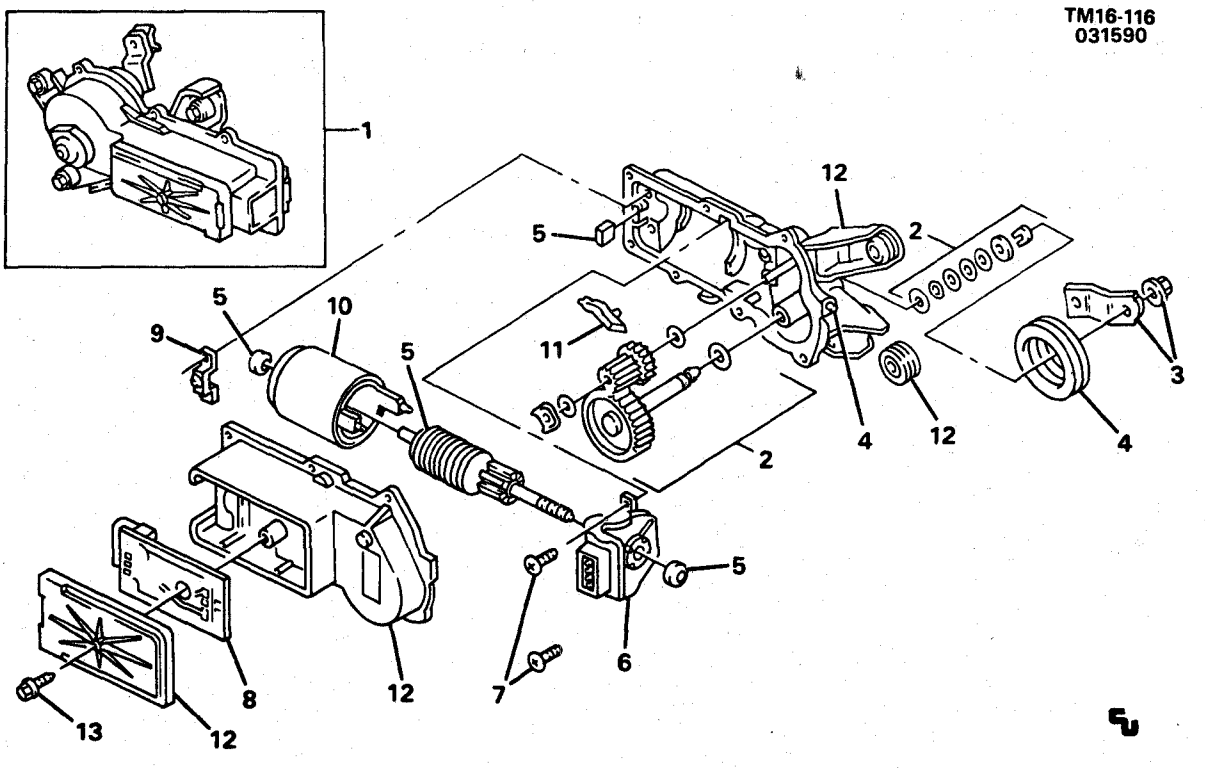

TM16-1169

1985-1986 CK WIPER MOTOR/WINDSHIELD
1987-1991 RV WIPER MOTOR/WINDSHIELD

NOTE: QUANTITY IS ONE PER ASSEMBLY UNLESS OTHERWISE SPECIFIED.

1.	16.064	**MOTOR**, WINDSHIELD WIPER (INCL ITEMS #2-13)	22049809
2.	16.063	**GEAR**, WINDSHIELD WIPER (W/SHAFT)	22021690
3.	16.064	**ARM**, WINDSHIELD WIPER MOTOR CRANK	22054184
4.	16.063	**TRANSMISSION**, WINDSHIELD WIPER-LH	22048312
	16.063	**TRANSMISSION**, WINDSHIELD WIPER-RH	22048313
5.	16.064	**ARMATURE**, WINDSHIELD WIPER MOTOR	22038925
6.	N.S.	**HOLDER**, WINDSHIELD WIPER MOTOR BRUSH	
7.	N.S.	**SCREW**, WINDSHIELD WIPER MOTOR (2 REQD)	
8.	N.S.	**BOARD**, WINDSHIELD WIPER MOTOR CIRCUIT (W/PULSE)	
9.	N.S.	**BRACKET**, WINDSHIELD WIPER MOTOR ARMATURE MOUNTING	
10.	N.S.	**MAGNET KIT**, WINDSHIELD WIPER MOTOR	
11.	N.S.	**ACTUATOR**, WINDSHIELD WIPER MOTOR PARK SWITCH	
12.	16.064	**COVER KIT**, WINDSHIELD WIPER MOTOR (W/PULSE)	22038809
13.	N.S.	**SCREW**	

© 1990 GENERAL MOTORS SERVICE PARTS OPERATIONS—LIGHT TRUCK 52R

NOTES

BLANK PAGE

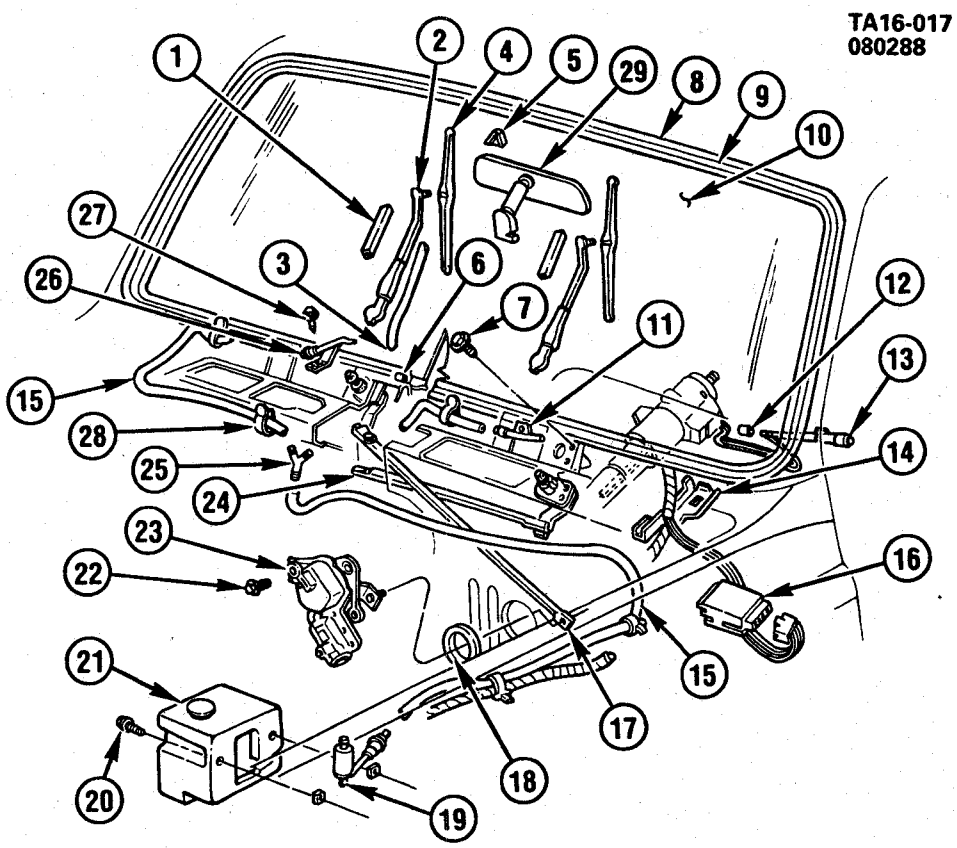

TA16-017

© 1990 GENERAL MOTORS SERVICE PARTS OPERATIONS—LIGHT TRUCK 52R

1985-1986 CK WIPER SYSTEM/WINDSHIELD
1987-1991 RV WIPER SYSTEM/WINDSHIELD

1.	16.065	**GUARD**, WSW ARM HOSE	15536442
2.	16.063	**ARM**, WSW	15522766
	16.063	**NOZZLE**, WA ARM	15581004
3.	8.962	**HOSE**, BULK (3/32X50 FT)(CUT AS REQD)	15580960
4.	16.062	**BLADE**, WSW	15593246
	16.062	**INSERT**, WSW BLADE (1985-88)	14029850
5.	16.069	**SUPPORT**, I/S RR VIEW MIR (10.187)	9831062
6.	16.041	**CAP**, W/S RVL MLDG (CHROME)(PAINT AS REQD)	12338048
7.	16.065	**BOLT**, WSW TRANS	14100225
8.	16.040	**WEATHERSTRIP**, W/S	471009
10.	16.005	**GLASS**, W/S (CLEAR)(W/ANT)(1985-87)	14018595
	16.005	**GLASS**, W/S (TINTED)(W/ANT)(1985-87)	14018596
	16.005	**GLASS**, W/S (CLEAR)(EXC ANT)(1987-91)	14018597
	16.005	**GLASS**, W/S (TINTED)(EXC ANT)(1987-91)	14018598
11.	16.065	**CONNECTOR**, WSWA NOZ HOSE-LH	15599457
12.	2.910	**INSULATOR**, T/SIG SW LVR (1985-88)	22524202
13.	2.897	**LEVER**, MULTI-FUNC (EXC PULSE & CRUISE)(BLK)(1985-88)	22510732
	2.897	**LEVER**, MULTI FUNC (EXC PULSE & CRUISE)(BRIGHT)(1985-90)	22510143
	2.897	**LEVER**, MULTI-FUNC (W/PULSE & CRUISE)(1985-91)	25111260
	2.897	**LEVER**, MULTI FUNC (W/PULSE, EXC CRUISE)(BLK)(1985-91)	22510733
	2.897	**LEVER**, MULTI FUNC (W/CRUISE, EXC PULSE)(1985-90)	25111261
14.	2.559	**RETAINER**, I/P WRG HARN (W/PULSE EXC CRUISE)	15598461
	2.559	**RETAINER**, I/P WRG HARN (W/PULSE & CRUISE)	15598462
15.	8.962	**HOSE**, WSWA BULK (5/32X25 FT)(CUT AS REQD)	1359744
16.	16.067	**MODULE**, WSW PULSE CONT	15598496
17.	16.063	**TRANSMISSION**, WSW	22048313
18.	16.064	**GASKET**, WSW MTR (10.152)	20489125
19.	16.065	**PUMP**, WSWA SOLV	22054183
20.	8.977	**SCREW**, HWH (1/4-20X7/8)	171031
21.	16.065	**CONTAINER**, WSWA SOLV	22054185
22.	16.064	**BOLT**, WSW & WSWA MTR (10.152)	3824124
23.	N.S.	**MOTOR ASM**, WSW & WSWA (SERVICED BY THE FOLLOWING COMPONENTS)	
	16.064	**MOTOR**, WSW	22049809
	16.063	**GEAR**, W/SHAFT, WSW MTR	22021690
	16.064	**CRANK ARM**, WSW MTR	22054184
	16.064	**CAP**, WSW MTR END	22038924
	16.064	**SWITCH**, WSW MTR PARK	22038808
	16.064	**ARMATURE**, WSW MTR	22038925
	16.064	**COVER KIT**, WSW MTR	22038809
24.	16.063	**TRANSMISSION**, WSW	22048312
25.	16.065	**CONNECTOR**, WSWA NOZ HOSE	22049831
26.	16.065	**CONNECTOR**, WSWA NOZ HOSE-RH	15599458
27.	8.977	**SCREW**, HWH TAP (M4.2X1.41X16, PZOR)	11509135
28.	8.965	**RETAINER**, ADJ PLASTIC (7 INCH)	3816659
29.	16.068	**MIRROR**, I/S RR VIEW	918656

© 1990 GENERAL MOTORS SERVICE PARTS OPERATIONS—LIGHT TRUCK 52R

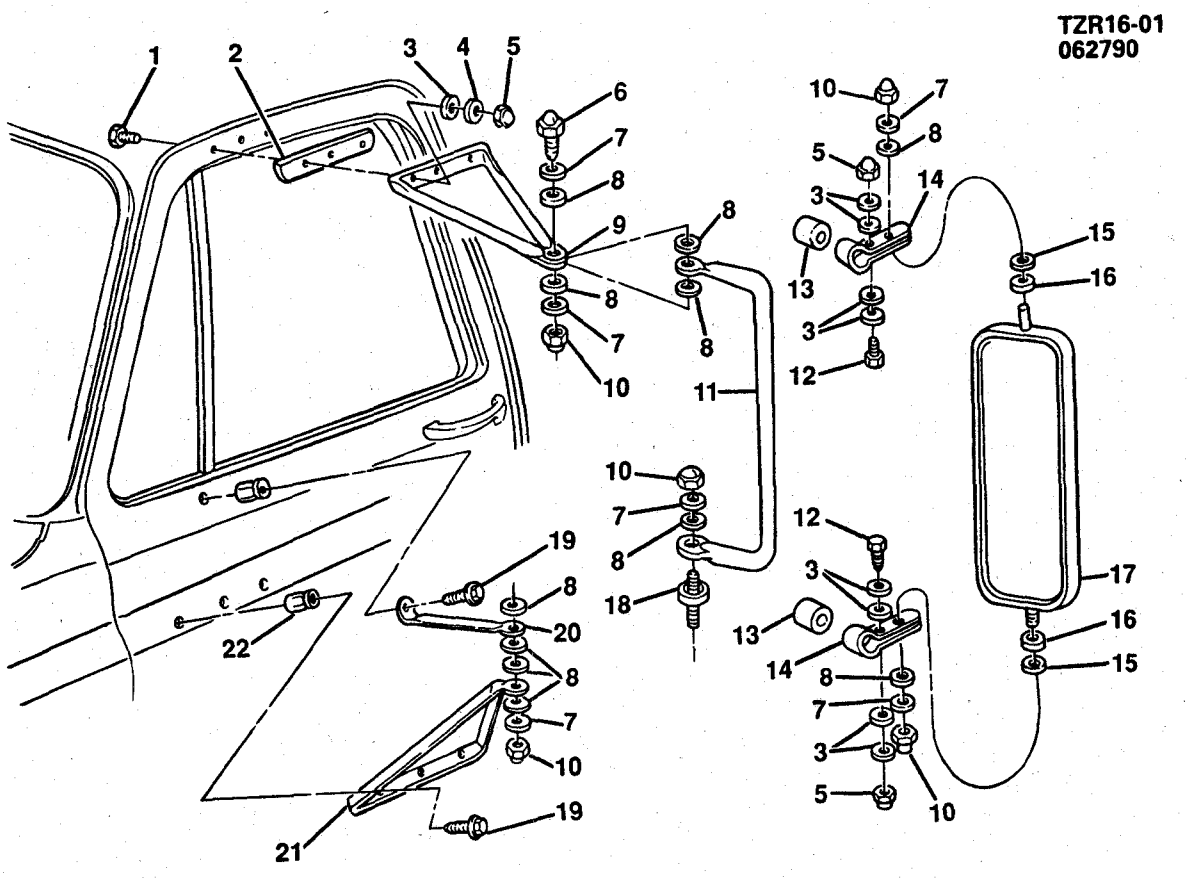

TZR16-01

1985-1986 CK MIRROR/EXTERIOR (SENIOR WEST COAST DG5)
1987-1991 RV MIRROR/EXTERIOR (SENIOR WEST COAST DG5)

NOTE: QUANTITY IS ONE PER ASSSEMBLY UNLESS OTHERWISE SPECIFIED.

1.	16.069	**BOLT**, RR VIEW MIR SUPT UPR	331531
2.	16.069	**GASKET**, MIR UPR ARM	3896473
3.	16.069	**WASHER**, RR VIEW MIR (1.240)	14016675
4.	16.069	**WASHER**, O/S RR VIEW MIR (1.240)	14016675
5.	16.069	**NUT**, O/S RR VIEW MIR	329121
6.	16.069	**BOLT**, RR VIEW MIR & SUPT	14016678
7.	8.929	**WASHER**, SPL PL (.44 ID STAINLESS STEEL)	331544
8.	16.069	**WASHER**, RR VIEW MIR SUPT	14001718
9.	16.069	**ARM**, MIR SUPT UPR-LH	14016691
	16.069	**ARM**, MIR SUPT UPR-RH	14016692
10.	16.069	**NUT**, MIR SUPT (3/8-16)(CROWN)	14016677
11.	16.069	**SUPPORT**, MIR	14016684
12.	16.069	**BOLT**, RR VIEW MIR BRKT	14016674
13.	16.069	**GASKET**, RR VIEW MIR BRKT	3768865
14.	16.069	**BRACKET**, MIR	14016685
15.	4.233	**WASHER**, MIR (27/64X7/8)(STEEL FRICTION)(*1)	8642107
16.	8.929	**WASHER**, SPL PL (.44)	331544
	16.069	**SPACER**, SUPT (USE WITH BRACKET MIRROR NOT SHOWN)	369504
17.	16.068	**MIRROR** (SHOWN)	14016682

© 1990 GENERAL MOTORS SERVICE PARTS OPERATIONS—LIGHT TRUCK 52R

17.	N.S.	**MIRROR** (WITH BRACKET ATTACHMENT)	
18.	16.069	**PIVOT**, MIR	14021236
19.	16.069	**BOLT**, O/S REAR VIEW MIR	14007511
20.	16.069	**BRACE**, MIR SUPT	14016693
21.	16.069	**ARM**, MIR SUPT LWR	14016686
22.	16.069	**NUT**, O/S RR VIEW MIR (1985-88)(AS REQD)	367292
	16.069	**NUT**, O/S RR VIEW MIR(1989-91)(2 REQD)	15551300

NOTE 1: REQUIRED ONLY WITH MIRROR AS SHOWN. NOT REQUIRED WITH BRACKET STYLE MIRROR.

© 1990 GENERAL MOTORS SERVICE PARTS OPERATIONS—LIGHT TRUCK 52R

TZR16-06
062890

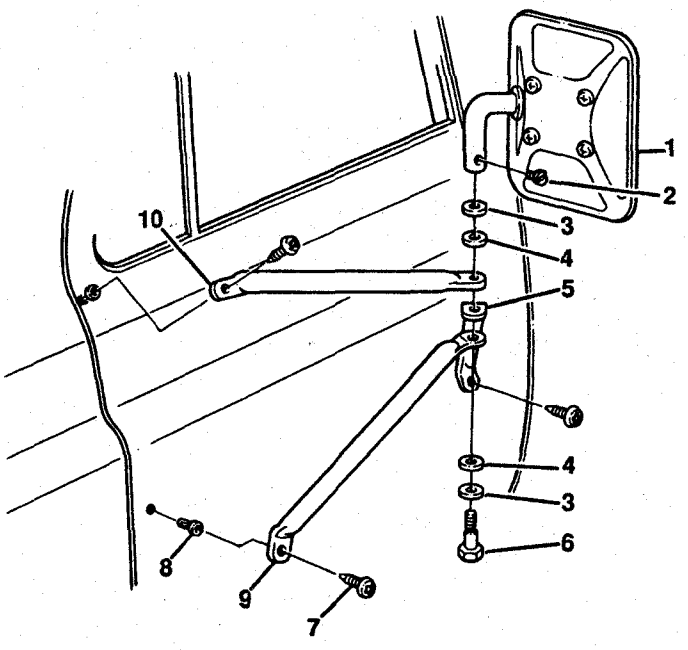

TZR16-06

1985-1986 CK MIRROR/EXTERIOR (W/DF2 CAMPER)
1987-1991 RV MIRROR/EXTERIOR (W/DF2 CAMPER)

1.	21.408	**MIRROR ASM**, RR VIEW (STAINLESS)(INCL #2)	998906
2.	8.975	**SCREW**, SLOTTED SET CUP POINT (#10-24)(PART OF #1)	
3.	16.069	**WASHER**, SPL PL (.44 ID, SST)	331544
4.	16.069	**WASHER**, RR VIEW MIR SUPT (NYLON)	14001718
5.	16.069	**BRACE**, RR VIEW MIR LWR RR-LH	15593419
	16.069	**BRACE**, RR VIEW MIR LWR RR-RH	15593420
6.	16.069	**BOLT**, RR VIEW MIR & SUPT	14028311
7.	16.069	**SCREW**, PAN HD TORX MA W/NYLON WA (1/4-20X.88)	15593546
8.	16.069	**NUT**, O/S RR VIEW MIR	367292
9.	16.069	**BRACE**, RR VIEW MIR LWR FRT-LH	15593417
	16.069	**BRACE**, RR VIEW MIR LWR FRT-RH	15593418
10.	16.069	**BRACE**, RR VIEW MIR UPR-LH	15593415
	16.069	**BRACE**, RR VIEW MIR UPR-RH	15593416

© 1990 GENERAL MOTORS SERVICE PARTS OPERATIONS—LIGHT TRUCK 52R

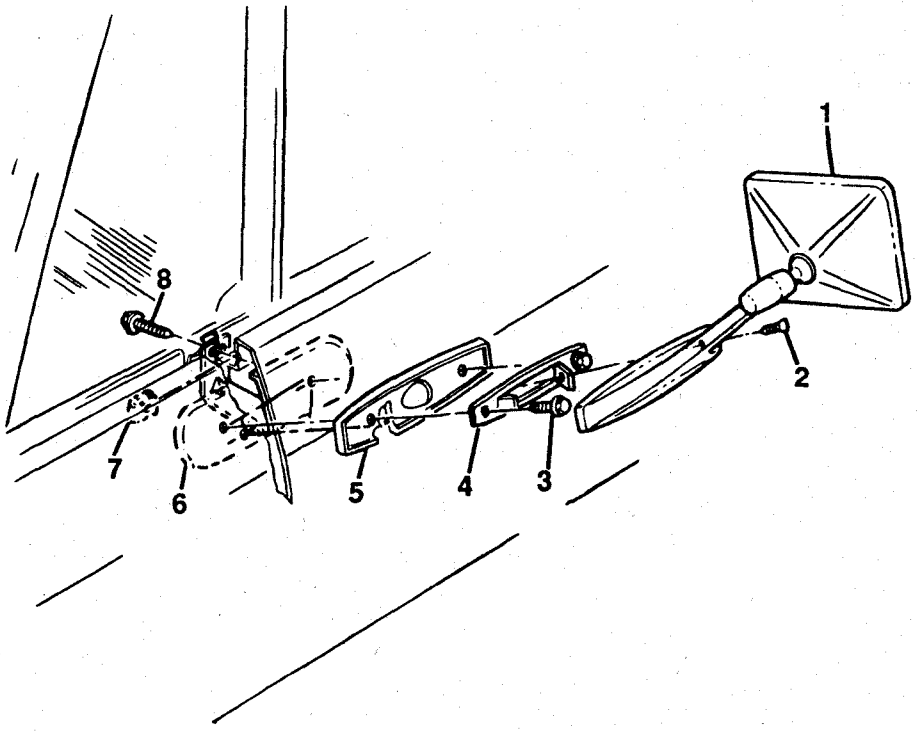

TZR16-07

1985-1986 CK MIRROR/EXTERIOR (STANDARD)
1987 RV MIRROR/EXTERIOR (STANDARD)

1.	16.068	**MIRROR ASM**	326174
2.	8.977	**SCREW**, OV HD TORX TAP (#10-24X1)	14016551
3.	8.900	**SCREW**, HWH TAP (#10-16X3/4)(9.211)	3036894
4.	16.069	**RETAINER**, O/S MIRROR	9826886
5.	16.069	**GASKET**, O/S RR VIEW MIRROR (10.186)	9829666
6.	16.069	**REINFORCEMENT**, RR VIEW MIRROR	326173
7.	8.921	**NUT**, U SPRING (#10-16X11/32)	
8.	16.069	**BOLT**, SIDE F/D (#10-16X9/16)	335551

© 1990 GENERAL MOTORS SERVICE PARTS OPERATIONS—LIGHT TRUCK 52R

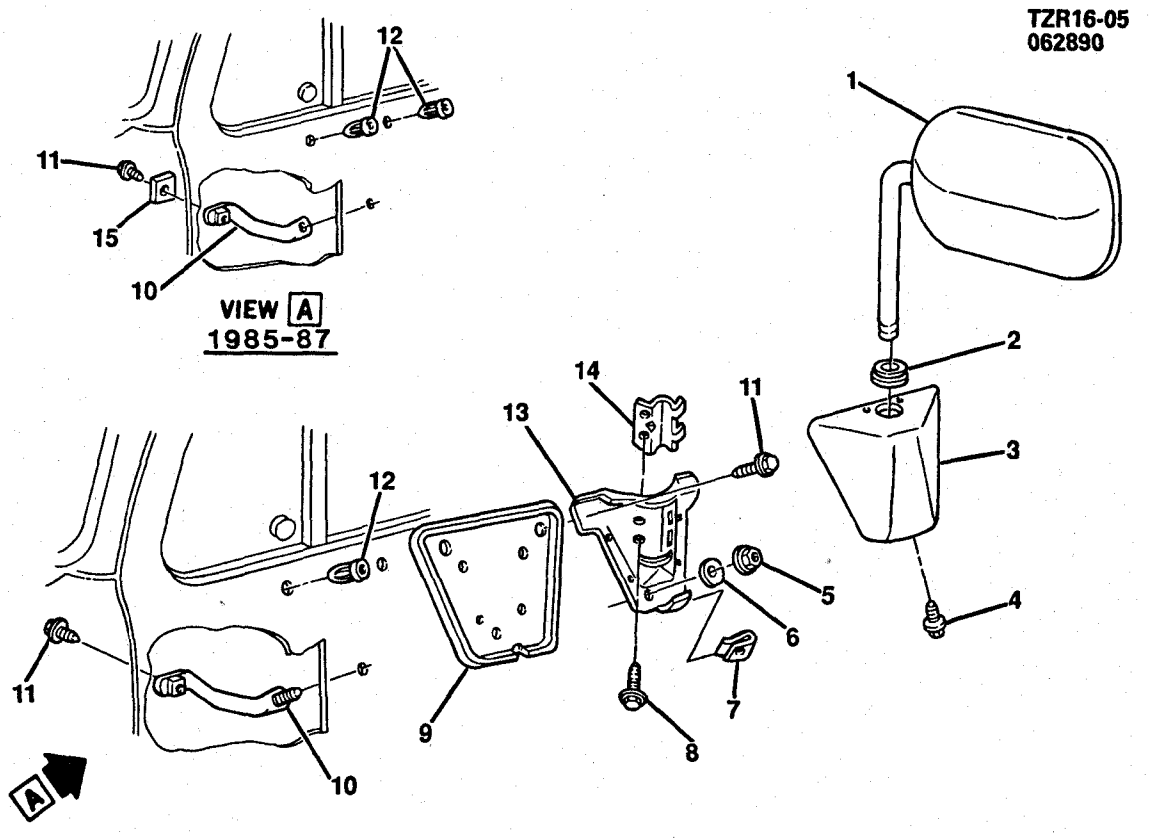

1987-1991 RV MIRROR/EXTERIOR (W/D44,D45)

1.	16.068	**MIRROR PKG**, HEAD ONLY (PAINTED D44)	996222
	16.068	**MIRROR PKG**, HEAD ONLY (STAINLESS D45)	996225
2.	16.069	**GROMMET**, MIR ARM	14007435
3.	16.069	**COVER**, MIR BRKT-LH (PAINTED D44)	15607935
	16.069	**COVER**, MIR BRKT-RH (PAINTED D44)	15607936
	16.069	**COVER**, MIR BRKT-LH (STAINLESS D45)	14007431
	16.069	**COVER**, MIR BRKT-RH (STAINLESS D45)	14007432
4.	8.977	**SCREW**, RD WA HD (M4.2X1.41X13)	14007440
5.	16.069	**NUT**, O/S RR VIEW MIR (VINYL CTD)	367292
6.	16.069	**WASHER**, RR VIEW MIR (1.240)	14016675
7.	8.921	**NUT**, SPRING (#8-18)	52351724
8.	8.977	**SCREW**, HEX WA HD (1/4-14X3/4)	
9.	16.069	**GASKET**, MIR BRKT	14008191
10.	16.069	**REINFORCEMENT**, MIR BRKT-LH (1985-87)	14007541
	16.069	**REINFORCEMENT**, MIR BRKT-LH	15628627
	16.069	**REINFORCEMENT**, MIR BRKT-RH (1985-87)	14007542
	16.069	**REINFORCEMTNT**, MIR BRKT-RH	15628628
11.	16.069	**BOLT**, O/S REAR VIEW MIRROR	14007511
12.	16.069	**NUT**, MIR BRKT	367292
13.	16.069	**BRACKET**, MIR	14007429
14.	16.069	**CLAMP**, MIR	14007430
15.	16.069	**SPACER**, MIR REINF (1985-87)	14007539

© 1990 GENERAL MOTORS SERVICE PARTS OPERATIONS—LIGHT TRUCK 52R

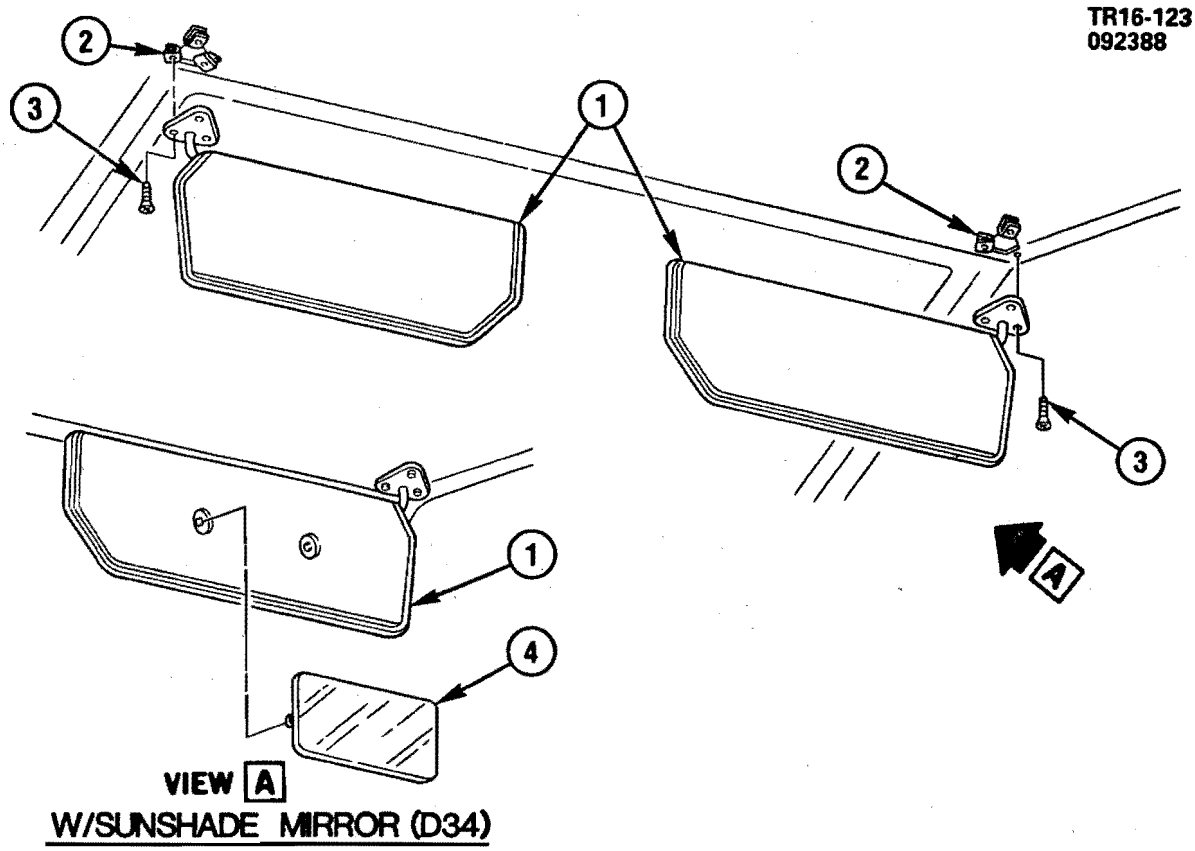

TR16-123

1985-1986 CK SUNSHADE
1987-1991 RV SUNSHADE

1.	16.070	**SUNSHADE**, W/SUPT (BLUE-23I)-LH(*1)	14013753
	16.070	**SUNSHADE**, W/SUPT (BLUE-23I)-RH(*1)	15601908
2.	8.921	**NUT**, U SHAPE (M4.2X1.41-.065 TO 3.8 PNL)	52351724
3.	8.977	**SCREW**, OV HD C/S TORX (M4.2X1.41X20)	11504659
4.	16.070	**MIRROR**, VISOR VANITY (W/VISOR VAN D34)	14016671

NOTE 1: PAINT AS REQUIRED.

© 1990 GENERAL MOTORS SERVICE PARTS OPERATIONS—LIGHT TRUCK 52R

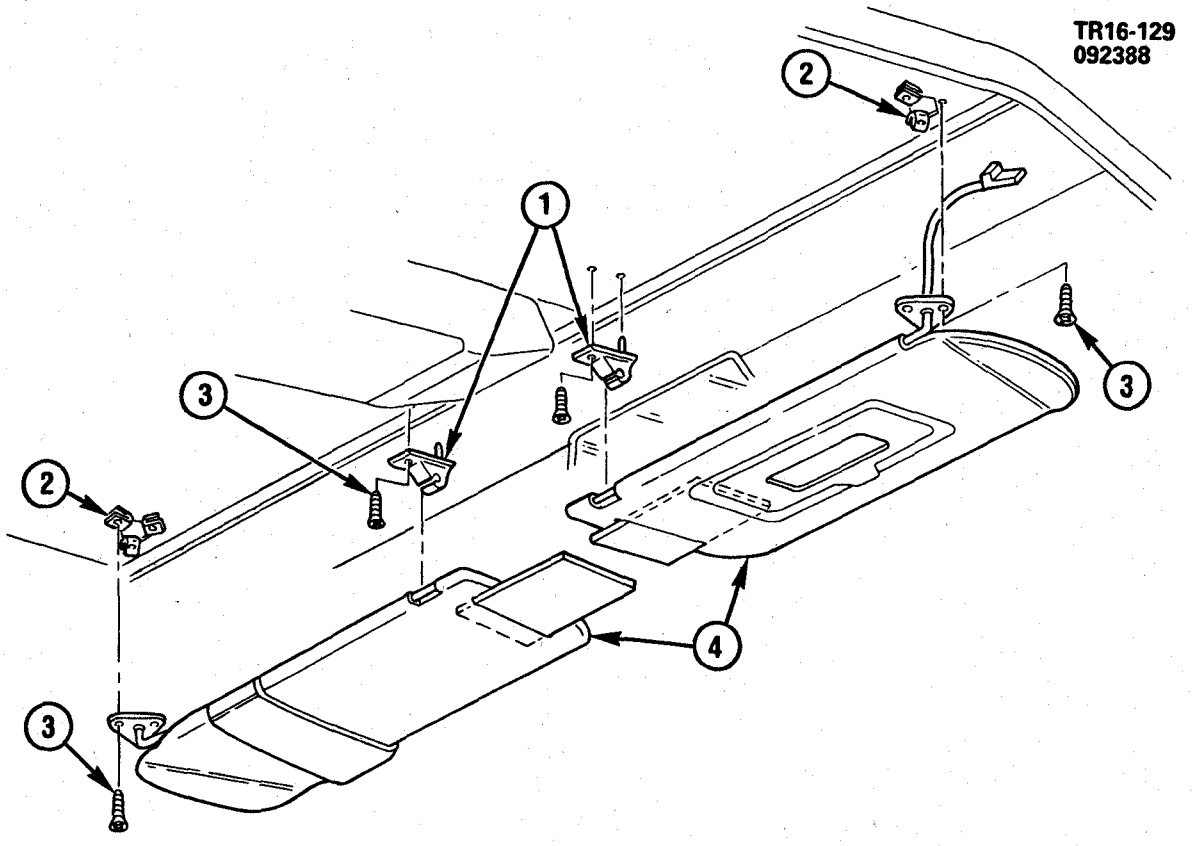

TR16-129

1989-1991 RV SUNSHADE W/SILVERADO/SIERRA (YE9)

1.	16.070	**RETAINER** ,S/S((PAINT AS REQD))(2)(1991)RV1,2(06)(YE9,24I)	15571623
2.	8.921	**NUT** , U SHAPE (M4.2X1.41-.065 TO 3.8 PNL)	52351724
3.	8.977	**SCREW** , OV HD C/S TORX (M4.2X1.41X20)	11504659
4.	16.070	**SUNSHADE** , (COGNAC-60I)-LH	15571419
	16.070	**SUNSHADE** , (COGNAC-60I)-RH	15571420
	16.070	**SUNSHADE** , (BLUE-24I)-LH	15571423
	16.070	**SUNSHADE** , (BLUE-24I)-RH	15571424
	16.070	**SUNSHADE** , (MAPLE-77I)-LH(1989)	15571429
	16.070	**SUNSHADE** , (MAPLE-77I)-RH(1989)	15571430
	16.070	**SUNSHADE** , (GRAY-82I)-LH(1989-90)	15571431
	16.070	**SUNSHADE** , (GRAY-82I)-RH(1989-90)	15571432
	10.203	**SUNSHADE** , (RED-47I)-LH (1990-91)	15624007
	10.203	**SUNSHADE** , (RED-47I)-RH (1990-91)	15624008
	10.203	**SUNSHADE** , (GRAY-13I)-LH (1990-91)	15641407
	10.203	**SUNSHADE** , (GRAY-13I)-RH (1990-91)	15641408

RPO DEFINITIONS
YE9 - SILVERADO/SIERRA CLASSIC PACKAGE
24I - INTERIOR TRIM,DARK BLUE

© 1990 GENERAL MOTORS SERVICE PARTS OPERATIONS—LIGHT TRUCK 52R

NOTES

BLANK PAGE

© 1990 GENERAL MOTORS SERVICE PARTS OPERATIONS—LIGHT TRUCK 52R

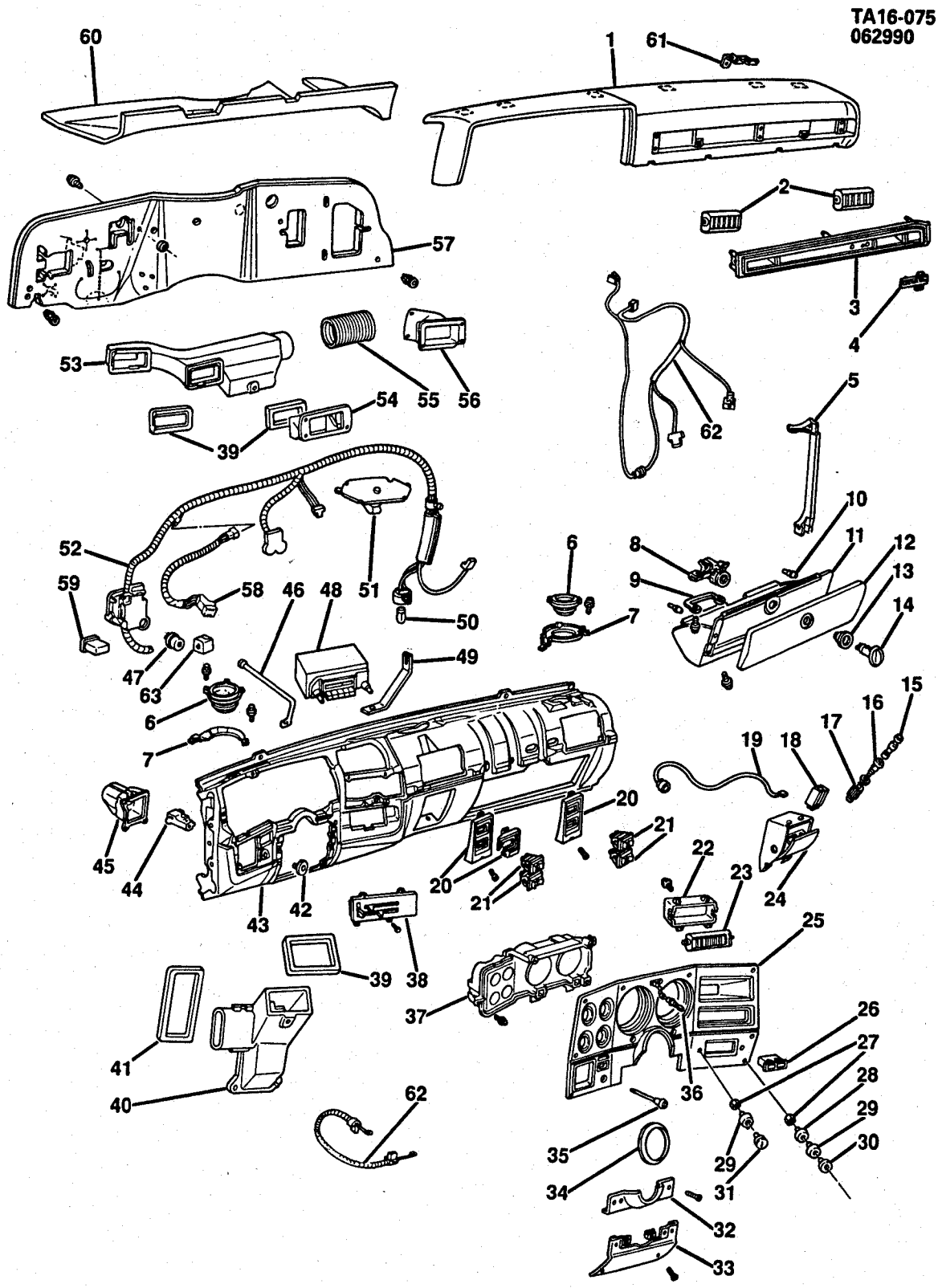

© 1990 GENERAL MOTORS SERVICE PARTS OPERATIONS—LIGHT TRUCK 52R

1985-1986 CK INSTRUMENT PANEL & RELATED PARTS
1987-1991 RV INSTRUMENT PANEL & RELATED PARTS

1.	16.090	**PAD**, I/P UPPER TRIM (PAINT AS REQD)(1985-89)	14031898
	16.090	**PAD**, I/P UPPER TRIM (PAINT AS REQD)(1990-91)	15641349
2.	9.264	**DEFLECTOR**, OUTER AIR OUTLET (W/A/C C60)	14014536
3.	16.081	**MOLDING**, I/P PAD (SEE CATALOG)	
4.	16.081	**PLATE**, I/P NAME (SEE CATALOG)	
5.	16.081	**FILLER**, I/P LOWER-LH (BLACK-PAINT AS REQD)	14068287
	16.081	**FILLER**, I/P LOWER-RH (BLACK-PAINT AS REQD)	14068288
6.	9.650	**SPEAKER**, FRONT	16040931
7.	9.655	**BRACKET**, RADIO FRONT SPEAKER MOUNTING-LH	14023021
	9.655	**BRACKET**, RADIO FRONT SPEAKER MOUNTING-RH	14023022
8.	16.110	**CASE**, I/P COMPARTMENT DOOR LOCK	14044471
9.	16.110	**STRIKER**, I/P COMPARTMENT DOOR LOCK	6274550
10.	16.110	**BUMPER**, I/P COMPARTMENT DOOR	3765243
11.	16.100	**COMPARTMENT**, I/P (EXC C60)(PAINT AS REQD)	15565245
	16.100	**COMPARTMENT**, I/P (W/C60)(PAINT AS REQD)	15565246
12.	16.110	**DOOR**, I/P COMPARTMENT(PAINT AS REQD)	6264131
13.	16.110	**BEZEL**, I/P LOCK	3957093
14.	16.110	**CYLINDER**, I/P COMPARTMENT DOOR LOCK	6260421
15.	9.709	**ELEMENT**, HEATING, CIGARETTE LIGHTER	344801
16.	9.709	**HOUSING**, CIGARETTE LIGHTER	3986869
18.	16.120	**ASHTRAY**	330484
19.	16.120	**CONDUCTOR**, ASH TRAY LIGHTER FIBER OPTIC	12066789
20.	16.263	**BEZEL**, DUAL SWITCH (RIGHT OF ASH TRAY)	14040840
	8.849	**BEZEL**, DUAL SWITCH (LEFT OF ASH TRAY)	14040839
	8.849	**BEZEL**, SINGLE SWITCH	14040894
21.	9.778	**SWITCH**, ELECTRIC REAR WINDOW DEFOGGER	14040843
	16.263	**SWITCH**, TAIL-GATE POWER WINDOW	14040844
	8.852	**SWITCH**, AUXILIARY HEATER	14040841
	9.275	**SWITCH**, AUXILIARY A/C CONTROL	14040842
22.	9.262	**ADAPTER**, CENTER AIR OUTLET DUCT-LH (W/A/C C60)	6262684
23.	9.264	**DEFLECTOR**, A/C AIR OUTLET	3979751
24.	16.120	**HOUSING**, ASH TRAY	14006139
25.	9.743	**PLATE**, I/P CLUSTER TRIM (SEE CATALOG)	
26.	9.765	**INDICATOR**, GLOW PLUGS & WATER IN FUEL (W/DIESEL)	14035189
	9.765	**INDICATOR**, WARNING LAMP (CHECK ENG)(1985-89)	14040867
27.	9.667	**NUT**, RADIO RECEIVER (1985-88)	1225217
28.	9.649	**SPACER**, RADIO TUNING CONTROL KNOB(EXC STEREO)(1985-88)	469326
29.	9.649	**KNOB**, RADIO TONE/SPEAKER CONTROL (1985-88)	469325
30.	9.649	**KNOB**, RADIO TUNING CONTROL (1985-88)	469321
31.	9.649	**KNOB**, RADIO VOLUME CONTROL (1985-88)	469323
32.	6.760	**FILLER**, I/P STEERING COLUMN OPENING	14023008
33.	16.081	**FILLER**, I/P STEERING COLUMN LOWER	6274970
34.	6.760	**COLLAR**, I/P STEERING COLUMN TRIM	14069365
35.	2.486	**KNOB**, LIGHT SWITCH (W/ROD)(1985-86)	15608685
	2.486	**KNOB**, HEADLAMP SWITCH (W/ROD)(1987-91)	15608685
36.	8.991	**BULB**, (#194)	
37.	N.S.	**CLUSTER**, INSTRUMENT(*1)	
38.	8.849	**CONTROL**, HEATER (EXC A/C C60)	16034561
	9.273	**CONTROL**, HEATER (W/A/C C60)	16034591
39.	9.262	**SEAL**, FOAM (1/2X.36X46 1/2)	363139
40.	9.262	**DUCT**, AIR DISTRIBUTOR LOWER (W/A/C C60)	6262679
41.	9.262	**GASKET**, AIR DISTRIBUTOR DUCT (W/A/C C60)	3963784
42.	2.487	**NUT**, LIGHT SWITCH ROD	6258213
43.	16.080	**PANEL**, INSTRUMENT (1985-88)	15590559
	16.080	**PANEL**, INSTRUMENT(1989-91)	15610124
44.	2.485	**SWITCH**, HEADLAMP	1995217
45.	9.262	**OUTLET**, AIR SIDE-LH (W/DEFLECTOR)(W/A/C C60)	14014557
46.	16.085	**SUPPORT**, I/P	351789
47.	2.575	**FLASHER**, HAZARD LAMP & TURN SIGNAL	6450089
48.	9.650	**RECEIVER**, RADIO (SEE CATALOG)	
	9.650	**COVER**, RADIO OPENING (EXC RADIO)(NOT SHOWN)	15565382
49.	9.667	**BRACKET**, RADIO RECEIVER (1985-88)	6270444
	9.667	**BRACE**, RADIO MOUNTING SUPPORT REAR	15638259
50.	8.991	**BULB**, COURTESY LAMP (#1003)	
51.	9.650	**SPEAKER**, FRONT (EXC STEREO)	16040901
52.	2.480	**HARNESS**, I/P (SEE CATALOG)	
53.	9.262	**DUCT**, CENTER AIR OUTLET (W/A/C C60)	14014556
54.	9.264	**DUCT**, CENTER AIR OUTLET (W/A/C C60)	14014539
55.	9.260	**HOSE**, AIR (3.25X72)	1234988
56.	9.262	**DUCT**, AIR SIDE-RH (W/A/C C60)	14014538
57.	16.802	**INSULATOR**, DASH PANEL (W/A/C C60 GAS)(1985-89)(EXC A/C C60 DIESEL) (1988-91)	15593833

© 1990 GENERAL MOTORS SERVICE PARTS OPERATIONS—LIGHT TRUCK 52R

58.	3.900	**MODULE**, FUEL PUMP CYC CONTROL (RV2,3 W/5.7K,7.4N)(1987-91)	**10052955**
59.	9.778	**RELAY**, REAR WINDOW DEFOGGER TIMER	**10014885**
61.	16.090	**RETAINER**, I/P UPPER TRIM PAD	**14031893**
62.	9.787	**CABLE**, HEATER & A/C TEMP CONTROL	**14047888**

NOTE 1: SEE RESPECTIVE GROUP FOR DETAILED ILLUSTRATION.

RPO DEFINITIONS
C60 - HVAC SYSTEM, AIR CONDITIONER FRT MAN CONTROLS

© 1990 GENERAL MOTORS SERVICE PARTS OPERATIONS—LIGHT TRUCK 52R

NOTES

BLANK PAGE

TZR16-04
070290

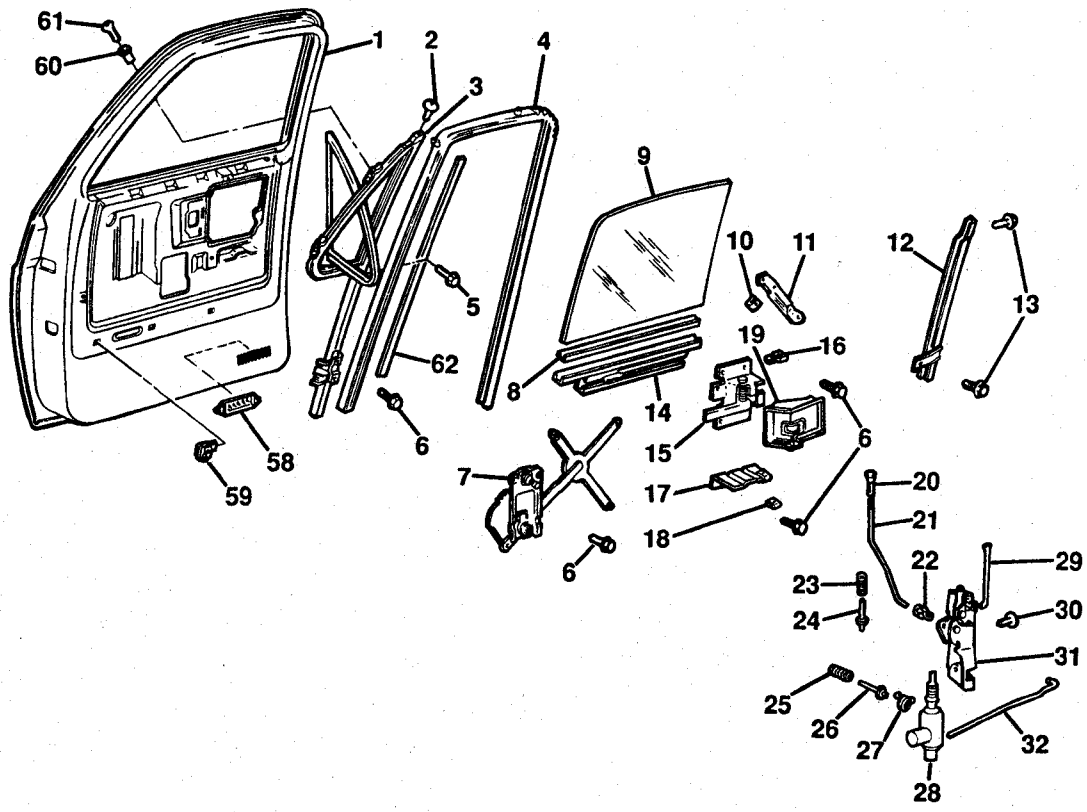

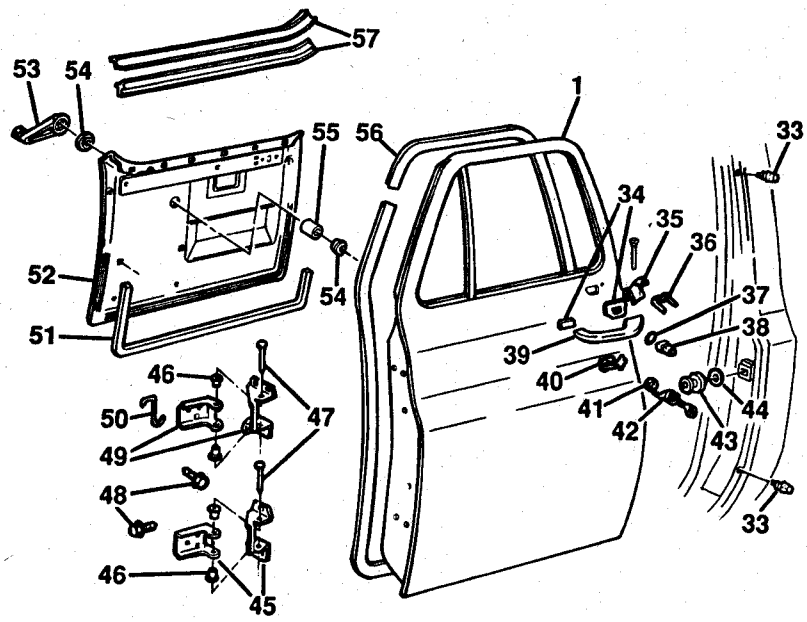

TZR16-04

© 1990 GENERAL MOTORS SERVICE PARTS OPERATIONS—LIGHT TRUCK 52R

1987-1991 RV DOOR HARDWARE/SIDE FRONT

NOTE: QUANTITY IS ONE PER ASSEMBLY UNLESS OTHERWISE SPECIFIED.

1.	16.150	**DOOR**, FRT SI-LH	15614497
	16.150	**DOOR**, FRT SI-RH	15614498
	16.152	**PANEL**, SI F/D OTR-LH	15598783
	16.152	**PANEL**, SI F/D OTR-RH	15598784
2.	16.173	**SCREW**, VENT WDO (1985-88)(*1)	15590443
	8.977	**SCREW**, HWH TAP (M4.2X1.41X16, PZOR)(AS REQD)	11509135
	8.054	**WASHER**, SPL SEALING FRT S/D VENT WDO (2 REQD)	3755760
3.	16.173	**VENTILATOR**, SI F/D-LH (LESS GLASS)(1985-89)(*1)	20307715
	16.173	**VENTILATOR**, SI F/D-RH (LESS GLASS)(1985-89)(*1)	20307716
	16.173	**WINDOW**, FRT S/D VENT(-LH CLEAR GLASS, WITHOUT HANDLE)RV(*1)	15634471
	16.173	**WINDOW**, FRT S/D VENT(-RH CLEAR GLASS, WITHOUT HANDLE)RV(*1)	15634472
	16.173	**WINDOW**, FRT S/D VENT(-LH TINTED GLASS, WITHOUT HANDLE)RV(*1)	15634473
	16.173	**WINDOW**, FRT S/D VENT(-RH TINTED GLASS, WITHOUT HANDLE)RV(*1)	15634474
4.	16.190	**RUN**, WDO GLS-LH(*1)	14027777
	16.190	**RUN**, WDO GLS-RH(*1)	14027778
5.	16.069	**BOLT**, VENT WDO (4 REQD)	335551
6.	8.900	**BOLT**, HEX W/CON SPR WA (1/4-20X1/2, 275M)(AS REQD)	
7.	16.260	**REGULATOR**, WDO-LH (EXC A31)	14027431
	16.260	**REGULATOR**, WDO-RH (EXC A31)	14027432
	16.260	**REGULATOR**, ELEC WDO F/D-LH	22030648
	16.260	**REGULATOR**, ELEC WDO F/D-RH	22030647
	16.263	**MOTOR**, WDO REG ELEC (2 REQD)	22062528
8.	16.190	**FILLER**, GLASS CHANNEL	370389
9.	16.180	**GLASS**, FRT S/D-LH (CLEAR)(03-43)	14022841
	16.180	**GLASS**, FRT S/D-RH (CLEAR)(03-43)	14022842
	16.180	**GLASS**, FRT S/D-LH (TINT)	14022843
	16.180	**GLASS**, FRT S/D-RH (TINT)	14022844
10.	1.269	**NUT**, FRT S/D PULL STRP (2 REQD)	1494257
11.	16.450	**BRACKET**, FRT S/D PULL STRP	458095
	16.450	**BRACKET**, FRT S/D PULL STRP	458096
12.	16.190	**CHANNEL**, FRT S/D WDO-LH	337715
	16.190	**CHANNEL**, FRT S/D WDO-RH	337716
13.	8.900	**BOLT**, HEX W/CON WA (1/4-20X.50, 275M PZOR)(AS REQD)	
14.	16.190	**SASH**, WDO-LH	15590401
	16.190	**SASH**, WDO-RH	15590402
15.	16.341	**CONTROL**, LK-LH (INCL #16)	15597653
	16.341	**CONTROL**, LK-RH (INCL #16)	15597654
16.	16.341	**CLIP**, LK REM CONT ROD	375180
17.	16.155	**BRACKET**, A/RST-LH	362433
	16.155	**BRACKET**, A/RST-RH	362434
18.	8.921	**NUT**, U-SHAPE (#10-12)	
19.	16.341	**SEAL**, LK REM CONT-LH	14026383
	16.341	**SEAL**, LK REM CONT-RH	14026384
20.	16.157	**KNOB**, LK REM ROD (BLACK)	7591126
21.	16.341	**ROD**, LK-LH (MANUAL)	14039767
	16.341	**ROD**, LK-RH (MANUAL)	14039768
	16.341	**ROD**, LK-LH (POWER)	458053
	16.341	**ROD**, LK-RH (POWER)	458054
22.	16.341	**CLIP**, REM LK ROD (PART OF #31)(17.198)	15545178
23.	16.335	**SPRING**, LK DETENT LVR (PART OF #31)	9827948
24.	16.335	**PIN**, LK DETENT LVR (PART OF #31)	9827947
25.	16.335	**SPRING**, LK O/S REL LVR (PART OF #31)	9827950
26.	16.345	**PIN**, LK O/S REL LVR SPR (PART OF #31)	9827961
27.	16.335	**SPRING**, LK LVR-LH (PART OF #31)	9886515
	16.335	**SPRING**, LK LVR-RH (PART OF #31)	9886514
28.	16.263	**ACTUATOR**, PWR LK (INC BRKT)	22020256
	16.263	**BRACKET**, PWR DR LK ACTR-LH	22049755
	16.263	**BRACKET**, PWR DR LK ACTR-RH	22049756
29.	16.341	**ROD**, LK O/S HDL	327067
30.	8.908	**SCREW**, FL SERR HD C/R MA (1/4-20X5/8, PEOR)	9439772
31.	16.330	**LOCK**, SI F/D-LH (INCL #22 THRU 27)	14039763
	16.330	**LOCK**, SI F/D-RH (INCLS #22 THRU 27)	14039764
32.	16.341	**ROD**, LK REM CONT-LH	14039765
	16.341	**ROD**, LK REM CONT-RH	14039766
33.	16.400	**BUMPER**, DOOR	3900684
34.	16.353	**GASKET**, S/D O/S HDL-LH (PART OF #39)	6258561
	16.353	**GASKET**, S/D O/S HDL-RH (PART OF #39)	6258562
35.	16.353	**LEVER**, LK O/S REL-LH (PART OF #39)	327063
	16.353	**LEVER**, LK O/S REL-RH (PART OF #39)	327064
36.	16.353	**SPRING**, LK O/S REL LVR (PART OF #39)	327065
37.	16.353	**SEAL**, SI DR LK O/S HDL PUSH BUTN (PART OF #39)(AS REQD)	6255780

© 1990 GENERAL MOTORS SERVICE PARTS OPERATIONS—LIGHT TRUCK 52R

38.	16.353	**BUTTON**, O/S HDL PUSH (PART OF #39)	327062
39.	16.350	**HANDLE**, LK O/S-LH (INCL #34 THRU 38)	6272581
	16.350	**HANDLE**, LK O/S-RH (INCL #34 THRU 38)	6272582
40.	16.353	**RETAINER**, LK CYL (AS REQD)	9728247
41.	16.328	**GASKET**, S/D LK CYL (2 REQD)	15646921
42.	16.330	**LOCK**, S/D-LH (W/NYLON ROD RET CLIPS)	
	16.330	**LOCK**, S/D-RH (W/NYLON ROD RET CLIPS)	
43.	16.335	**STRIKER**, LK (AS REQD)	9601750
44.	8.929	**WASHER**, FL (M13X45X1.5, PHOS)(AS REQD)	
45.	16.320	**HINGE**, LWR-LH (INCL #46,47)	14000091
	16.320	**HINGE**, LWR-RH (INCL #46,47)	14000092
46.	16.323	**BUSHING**, DR HGE (PART OF #45)	9721917
47.	16.323	**PIN**, DR HINGE BUSH (PART OF #45)	6271989
48.	8.016	**BOLT**, HEX W/CON WA (3/8-16X1 1/8, POR)(AS REQD)	
49.	16.320	**HINGE**, UPR-LH (INCL #46,47,50)	14000093
	16.320	**HINGE**, UPR-RH (INCL #46,47,50)	14000094
50.	16.320	**ROD**, UPR HGE TORQUE-LH	327959
	16.320	**ROD**, UPR HGE TORQUE-RH	327960
51.	16.165	**SEAL**, FOAM (46.5X.36X.5)(9.262)	363139
52.	16.165	**PANEL**, TR (CHARCOAL)(*2)	
53.	16.270	**HANDLE**, WDO REG (EXC A31)(2 REQD)	14030586
54.	16.270	**PLATE**, WDO REG HDL BRG (BLACK)(EXC A31)(AS REQD)	14010954
55.	16.270	**SPACER**, WDO REG HDL (EXC A31)(*3)	364372
56.	16.225	**WEATHERSTRIP**, FRT S/D (ON BODY) (2 REQD)	15522764
57.	16.183	**WEATHERSTRIP**, WDO INR-LH	15569071
	16.183	**WEATHERSTRIP**, WDO INR-RH	15569072
	16.183	**SEAL**, WDO OTR-LH	14027775
	16.183	**SEAL**, WDO OTR-RH	14027776
58.	16.520	**VALVE**, PRESSURE RELIEF DOOR (2 REQD)	461610
59.	16.165	**RETAINER**, TR PNL (NUT TYPE)(6 REQD)	15590422
60.	16.176	**BUSHING**, VENT WDO (4 REQD)	14013789
61.	8.977	**SCREW**, OV HD TORQ (M4.2X1.41X20, CHROME BRIGHT)	
62.	16.183	**WEATHERSTRIP**, FRT S/D WDO INR-LH	15569071
	16.183	**WEATHERSTRIP**, FRT S/D WDO INR-RH	15569072

NOTE 1: THE VENT WINDOW IS SERVICED AS AN ASSEMBLY STARTING IN 1989.
NOTE 2: SEE GROUP 16.165 FOR ADDITIONAL COLORS.
NOTE 3: CUT AS REQD.

RPO DEFINITIONS
A31-WINDOW ELEC CONTROL.

© 1990 GENERAL MOTORS SERVICE PARTS OPERATIONS—LIGHT TRUCK 52R

NOTES

BLANK PAGE

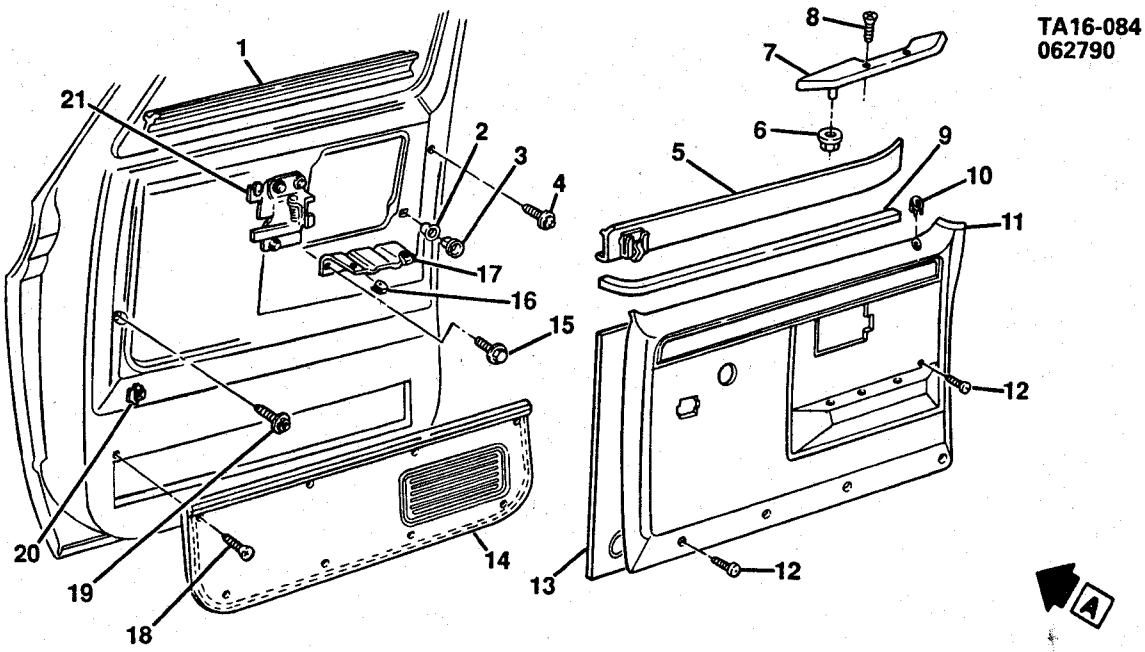

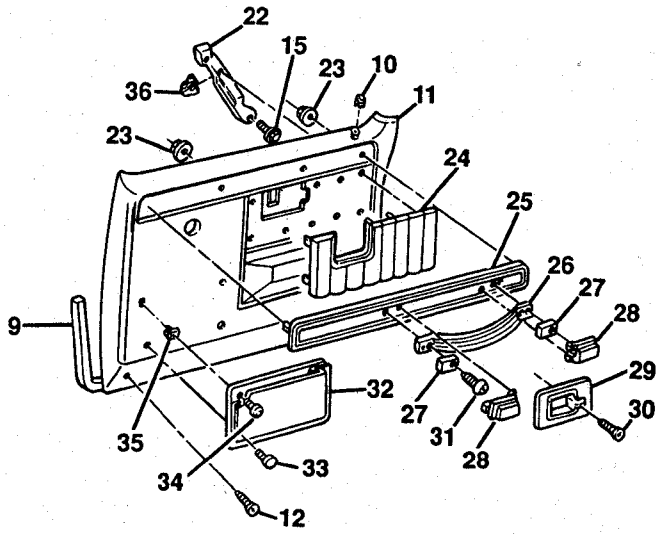

VIEW A
1985-88 W/YE9, Z62
1989 (03) W/YE9
1989-91 (16,43) W/YE9)

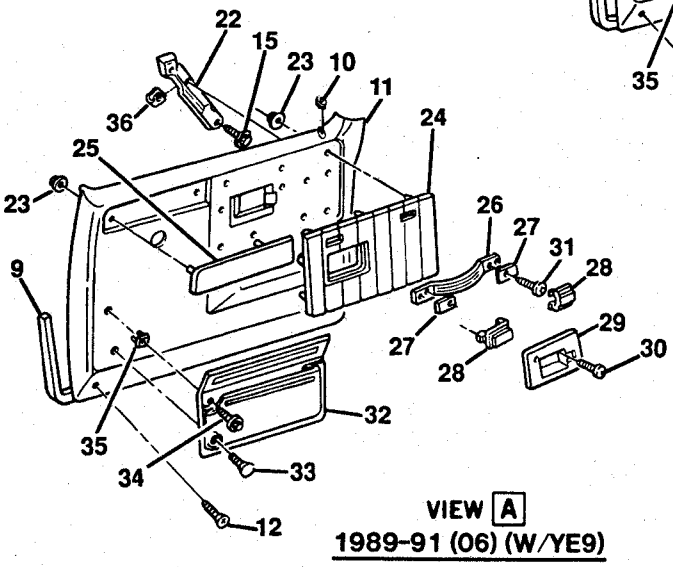

VIEW A
1989-91 (06) (W/YE9)

TA16-084

© 1990 GENERAL MOTORS SERVICE PARTS OPERATIONS—LIGHT TRUCK 52R

1985-1986 CK DOOR TRIM/SIDE FRONT
1987-1991 RV DOOR TRIM/SIDE FRONT

2.	16.802	**SEAL**, SI F/D TR PNL	3868762
3.	8.921	**NUT**, ANCHOR (#8, NYLON)	
4.	16.712	**FASTENER**, TR PNL SI (14.683)(1985-88)	15600382
	14.691	**FASTENER**, F/D TR TO INR PNL (1989-91)(AR)(1985-90)F	20374473
5.	16.183	**WEATHERSTRIP**, SI F/D WDO INR-LH(1)	15569071
	16.183	**WEATHERSTRIP**, SI F/D WDO INR-RH(1)	15569072
6.	8.921	**NUT**, TYPE SK STAMPED	9420621
7.	16.155	**ARM REST**, -LH (BLUE)(1985-88)(PAINT AS REQUIRED)(*1)	14026409
	16.155	**ARM REST**, -RH (BLUE)(1985-88)(PAINT AS REQUIRED)(*1)	14026410
8.	8.977	**SCREW**, PAN HD C/R TAP (#10-16X.75)	
9.	16.165	**SEAL**, FOAM (46.5X.36X.5)(9.262)	363139
10.	16.157	**FERRULE**, LK REM LK ROD	330485
11.	16.165	**PANEL**, TR-LH (PAINT AS REQUIRED)(*1)	15597667
	16.165	**PANEL**, TR-RH (PAINT AS REQUIRED)(*1)	15597668
12.	8.977	**SCREW**, PAN HD W/FL WA C/R TAP (M4.2X1.41X30)	
13.	12.895	**SEAL**, FRT S/D T/PNL-LH (1990-91)(1)	15647015
	12.895	**SEAL**, FRT S/D T/PNL-RH (1990-91)(1)	15647016
14.	16.165	**CARPET**, TR PNL-RH (CHARCOAL)(W/YE9)(*1)	14057372
15.	8.900	**BOLT**, HEX W/CON SPR WA (1/4-20X1/2, 275M)	
16.	8.921	**NUT**, U-SHAPE (10-12)	9423053
17.	16.155	**BRACKET**, A/RST-LH	362433
	16.155	**BRACKET**, A/RST-RH	362434
18.	8.977	**SCREW**, OV CSINK TR C/R (M4.2X1.41X16)	
19.	16.165	**RETAINER**, TR PNL (2.530)	363137
20.	16.165	**RETAINER**, TR PNL	15590422
21.	8.921	**NUT**, U SHAPE (M4.2X1.41X.065, ZOR)	
22.	16.450	**BRACKET**, ASST STRAP-LH	458095
	16.450	**BRACKET**, ASST STRAP-RH	458096
23.	8.921	**NUT**, MET SKW FLG (M5X15, PHOS)	
24.	16.166	**INSERT**, TR PNL-LH (CHARCOAL)(*1)	15593857
	16.166	**INSERT**, TR PNL-RH (CHARCOAL)(*1)	14043860
	16.166	**INSERT**, TR PNL (BLACK) (03 W/Z62)(1985-89)	14023855
25.	16.166	**INSERT**, TR PNL-LH (W/YE9)(*1)	14057475
	16.166	**INSERT**, TR PNL-RH (W/YE9)(*1)	14057476
26.	16.450	**STRAP**, ASST (W/YE9)(CHARCOAL)(*1)	14057469
27.	16.450	**REINFORCEMENT**, FRT S/D ASST STRP RV (1987-91)	12338105
28.	16.450	**COVER**, ASST STRP	14043704
29.	16.345	**BEZEL**, HDL ACC HOLE-LH (BLACK)(YE9,Z62)	15606435
	16.345	**BEZEL**, HDL ACC HOLE-RH (BLACK)(W/YE9,Z62)	15606436
30.	8.977	**SCREW**, OV HD C/R TYPE B ORG BLK (M4.2X1.41X20)	11503537
31.	16.450	**SCREW**, W/WASHER, ASST STRAP (1985-87)	364384
	16.450	**BOLT**, W/WASHER, ASST STRAP	15606306
32.	16.155	**POCKET** (CHARCOAL)(*1)	14036949
33.	16.165	**RETAINER**, PNL HOLE (12.801)	480534
34.	8.977	**SCREW**, PAN HD C/R TAP (M4.2X1.41X20)	
35.	2.729	**NUT**, SPL ANC (NYLON)(SQUARE HOLE)	347347
36.	1.269	**NUT**, ASST STRAP (1/4-20)	1494257

NOTE 1: FOR ADDITIONAL PART NUMBERS & COLORS REFER TO CATALOG.

RPO DEFINITIONS
YE9 - CONVENIENCE PKG, COMFORT & DECOR LEVEL #3
Z62 - CONVENIENCE PKG, COMFORT & DECOR LEVEL #1

© 1990 GENERAL MOTORS SERVICE PARTS OPERATIONS—LIGHT TRUCK 52R

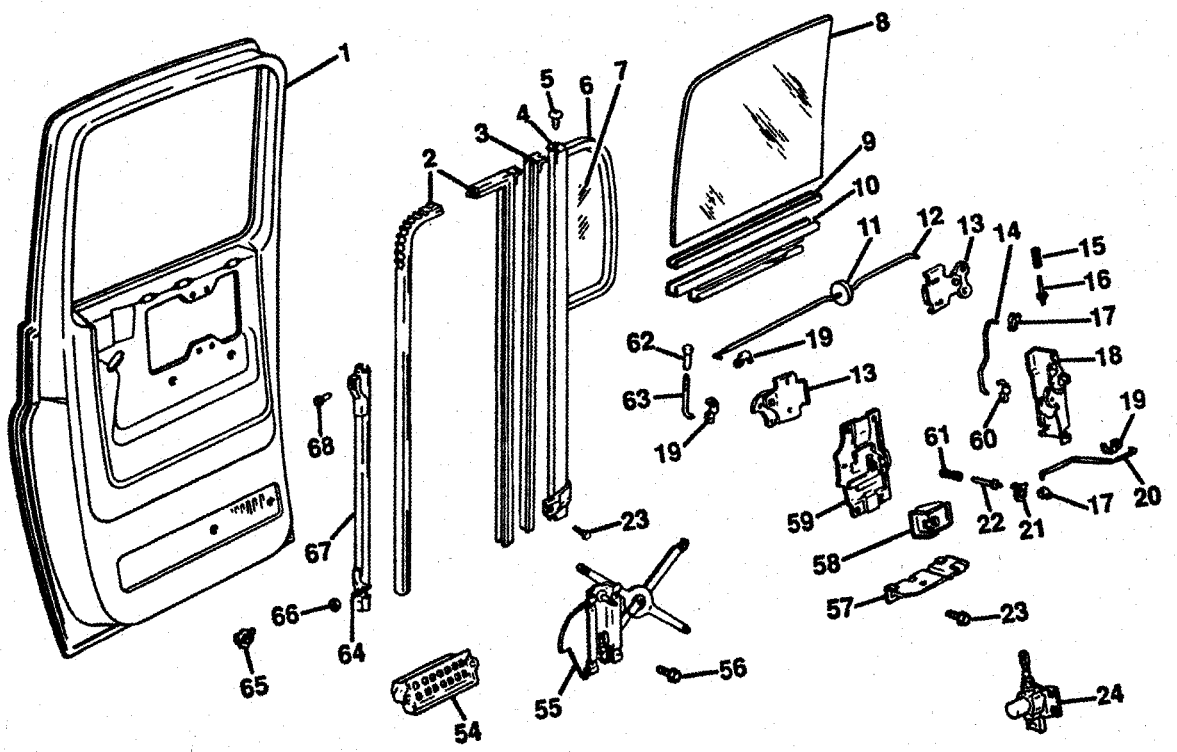

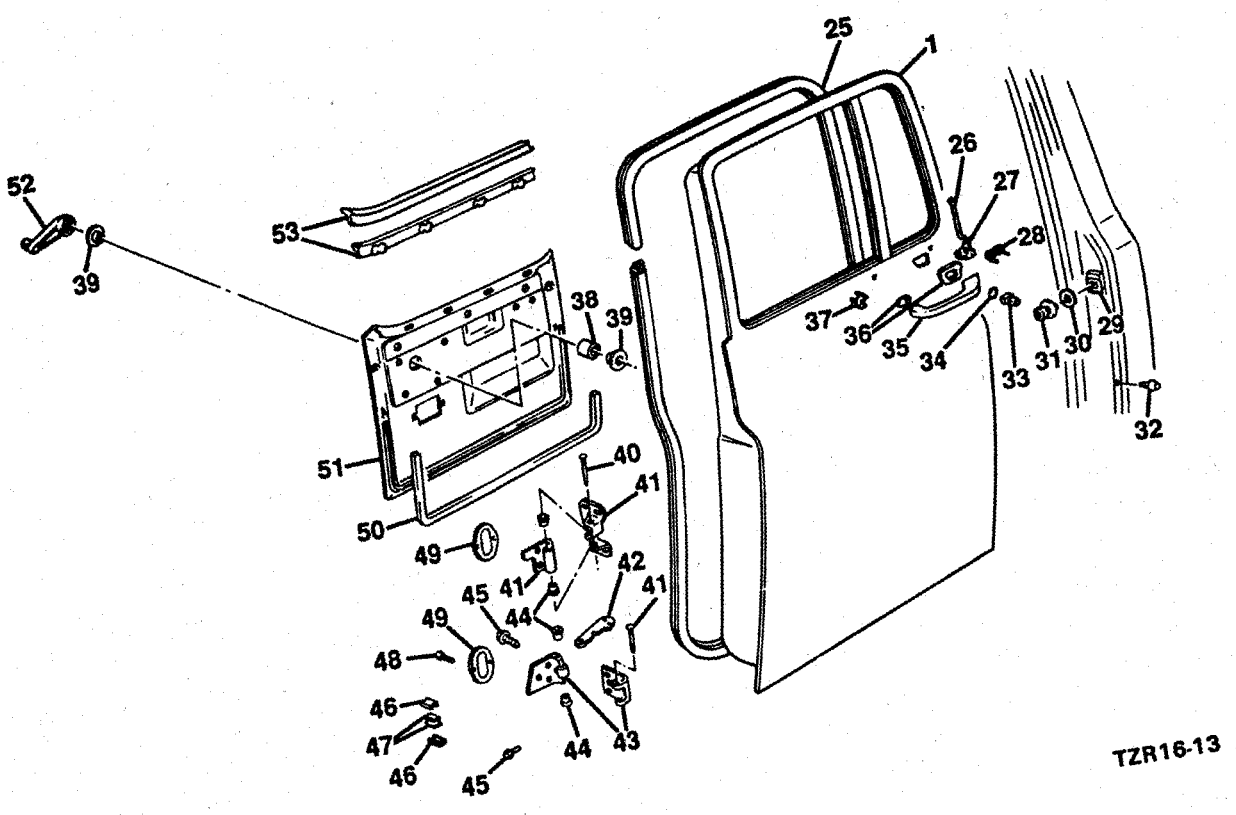

TZR16-13

© 1990 GENERAL MOTORS SERVICE PARTS OPERATIONS—LIGHT TRUCK 52R

1985-1986 CK(06-43) DOOR HARDWARE/SIDE REAR
1987-1991 RV(06-43) DOOR HARDWARE/SIDE REAR

1.	16.150	**DOOR** ,RR SI(-LH (1985-88))	15531563
	16.150	**DOOR** ,RR SI(-LH (1989-91))	15641847
	16.150	**DOOR** ,RR SI(-RH (1985-88))	15531564
	16.150	**DOOR** ,RR SI(-RH (1989-91))	15628658
2.	16.190	**RUN** , WDO (EXC DEEP TNTD GLS)	14027787
	16.190	**RUN** , RR S/D WDO (W/DEEP TNTD GLS)(06)	339902
3.	16.183	**WEATHERSTRIP** , RR S/D WDO (W/DEEP TNTD GLS)(06)	14004784
4.	16.190	**CHANNEL** , WDO RR GDE-LH	15606509
	16.190	**CHANNEL** , WDO RR GDE-RH	15606510
5.	8.977	**SCREW** , C/R TAP (M4.2X1.41X13)	
	8.800	**SEALANT** , SILICONE RTV	
6.	16.183	**WEATHERSTRIP** , STA WDO	15646933
7.	16.180	**GLASS** , STA-LH (CLEAR)(43)	6274449
	16.180	**GLASS** , STA-RH (CLEAR)(43)	6274450
	16.180	**GLASS** , STA-LH (TINT)	6274453
	16.180	**GLASS** , STA-RH (TINT)	6274454
	16.180	**GLASS** , STA-LH (DEEP TINT)(06)	14027469
	16.180	**GLASS** , STA-RH (DEEP TINT)(06)	14027470
8.	16.180	**GLASS** , RR S/D-LH (CLEAR)(43)	14027461
	16.180	**GLASS** , RR S/D-RH (CLEAR)(43)	14027462
	16.180	**GLASS** , RR S/D-LH (TINT)	14027463
	16.180	**GLASS** , RR S/D-RH (TINT)	14027464
	16.180	**GLASS** , RR S/D-LH (DEEP TINT)(06)	14027465
	16.180	**GLASS** , RR S/D-RH (DEEP TINT)(06)	14027466
9.	16.190	**FILLER** , GLASS CHANNEL(CUT AS REQD)	
10.	16.190	**SASH** , WDO (EXC DEEP TNTD GLS)	14027467
	16.190	**SASH** , WDO (W/DEEP TNTD GLS)(06)	351731
11.	16.157	**INSULATOR** , LK ROD	14007449
12.	16.157	**ROD** , REM LK CTR-LH	14039771
	16.157	**ROD** , REM LK CTR-RH	14039772
13.	16.345	**LEVER** , REM LK	14039775
14.	16.157	**ROD** , LK LWR-LH (MANUAL)	14039773
	16.157	**ROD** , LK LWR-RH (MANUAL)	14039774
	16.341	**ROD** , REM LK-LH (POWER)	14003037
	16.341	**ROD** , REM LK-RH (POWER)	14003038
15.	16.335	**SPRING** , LK DETENT LVR	9827948
16.	16.335	**PIN** , LK DETENT LVR	9827947
17.	16.341	**CLIP** , REM CONT ROD	375180
18.	16.330	**LOCK** , SI R/D-LH (INCL #14,15,20,21,22)	14039763
	16.330	**LOCK** , SI R/D-RH (INCL #14,15,20,21,22)	14039764
19.	16.341	**CLIP** , REM LK ROD (17.198)	15545178
20.	16.341	**ROD** , LK REM CONT-LH	14039769
	16.341	**ROD** , LK REM CONT-RH	14039770
21.	16.335	**SPRING** , LOCKING LVR-LH(1985-88)	9886515
	16.335	**SPRING** , LOCKING LVR-RH(1985-88)	9886514
22.	16.345	**PIN** , LK O/S REL LVR SPR	9827961
23.	8.900	**BOLT** , LG HEX HD MA (1/4-20X1/2)	
24.	16.263	**ACTUATOR** , PWR LK (10.485)	22020256
	16.263	**BRACKET** , LK ACTUATOR-LH	22049757
	16.263	**BRACKET** , LK ACTUATOR-RH	22049758
25.	16.225	**WEATHERSTRIP** , RR S/D (06)	15606409
	16.225	**WEATHERSTRIP** , RR S/D (43)	15606344
26.	16.341	**ROD** , LK O/S HDL	327067
27.	16.353	**LEVER** , O/S REL-LH	327063
	16.353	**LEVER** , O/S REL-RH	327064
28.	16.353	**SPRING** , O/S REL LVR	327065
29.	16.335	**PLATE** , STKR TAP	6272627
30.	8.929	**WASHER** , FL (M13X45X1.5)	
31.	16.335	**STRIKER** , LK (10.569)	9601750
32.	16.400	**BUMPER** , DR	3900684
33.	16.353	**BUTTON** , O/S HDL PUSH	327062
34.	16.353	**SEAL** , SI R/D LK O/S HDL PUSH BUTN	15593878
35.	16.350	**HANDLE** , O/S-LH (INCL #32,33,37,38,40,41)	6272581
	16.350	**HANDLE** , O/S-RH (INCL #32,33,37,38,40,41)	6272582
36.	16.353	**GASKET KIT** , O/S HDL-LH	6258561
	16.353	**GASKET KIT** , O/S HDL-RH	6258562
37.	16.353	**CLIP** , O/S HDL ROD	331616
38.	16.270	**SPACER** , WDO REG HDL	364372
39.	16.270	**PLATE** , WDO REG HDL BRG	14010954
40.	16.323	**PIN** , DR HINGE BUSH (10.466)	6271989
41.	16.320	**HINGE** , UPR-LH (INCL #42,45)	14001303
	16.320	**HINGE** , UPR-RH (INCL #42,45)	14001304

© 1990 GENERAL MOTORS SERVICE PARTS OPERATIONS—LIGHT TRUCK 52R

42.	16.437	**ARM**, SI DR CHK	3934499
43.	16.320	**HINGE**, LWR-LH (INCL #42,43,45,47,48)	14001301
	16.320	**HINGE**, LWR-RH (INCL #42,43,45,47,48)	14001302
44.	16.323	**BUSHING**, DR HGE (17.208)	335524
45.	8.977	**SCREW**, TAP (3/8-16X1 1/8)	
	8.931	**WASHER**, SPR LK (3/8X11/16, ZOR)	
46.	16.437	**RETAINER**, FRICTION PAD	3891811
47.	16.437	**PAD**, CHK ARM FRICTION	457674
48.	8.977	**SCREW**, PAN HD C/REC TAP (M4.2X1.41X16)	
49.	16.323	**COVER**, HGE ACC HOLE	334135
50.	16.165	**SEAL**, FOAM (46.5X.36X.5)	363139
51.	16.165	**PANEL**, RR S/D TR (SEE CATALOG)	
52.	16.270	**HANDLE**, WDO REG	14030586
53.	16.183	**WEATHERSTRIP**, WDO INR-LH (EXC DEEP TNTD GLS)	14057425
	16.183	**WEATHERSTRIP**, WDO INR-RH (EXC DEEP TNTD GLS)	14057426
	16.183	**WEATHERSTRIP**, WDO INR-LH (W/DEEP TNTD GLS)(06)	14057423
	16.183	**WEATHERSTRIP**, WDO INR-RH (W/DEEP TNTD GLS)(06)	14057424
	16.183	**WEATHERSTRIP**, WDO OTR-LH (EXC DEEP TNTD GLS)	14027785
	16.183	**WEATHERSTRIP**, WDO OTR-RH (EXC DEEP TNTD GLS)	14027786
	16.183	**WEATHERSTRIP**, WDO OTR-LH (W/DEEP TNTD GLS)(06)	325365
	16.183	**WEATHERSTRIP**, WDO OTR-RH (W/DEEP TNTD GLS)(06)	325366
54.	16.520	**VALVE**, PRES RELIEF DOOR	461610
55.	16.260	**REGULATOR**, WDO-LH (MANUAL)	14027433
	16.260	**REGULATOR**, WDO-RH (MANUAL)	14027434
	N.S.	**REGULATOR**, WDO-LH (POWER)	
	N.S.	**REGULATOR**, WDO-RH (POWER)	
	16.263	**MOTOR**, WDO REG POWER	22062528
	16.260	**REGULATOR**, WDO-LH (POWER)	22030649
	16.260	**REGULATOR**, WDO-RH (POWER)	22030650
	10.783	**ROLLER**, ELEC WDO REG	22049666
56.	8.977	**SCREW**, HEX W/CON WA (1/4-20X.62, 275M PZOR)	9439771
57.	16.155	**BRACKET**, A/RST-LH	364349
	16.155	**BRACKET**, A/RST-RH	364350
58.	16.341	**SEAL**, LK REM CONT-LH(1985-89)	14026383
	16.341	**SEAL**, LK REM CONT-RH(1985-89)	14026384
59.	16.341	**CONTROL**, LK REM-LH	15597655
	16.341	**CONTROL**, LK REM-RH	15597656
60.	16.341	**CLIP**, REM LK ROD (17.198)	15545178
61.	16.335	**SPRING**, O/S REL LVR (10.474)	9827950
62.	16.157	**KNOB**, REMOTE ROD (BLACK)	7591126
63.	16.157	**ROD**, LK UPR	14039778
64.	16.190	**STUD**, WDO GLS GDE (10.670)(1985-89)	4868577
65.	16.165	**RETAINER**, TR PNL	15590422
66.	8.917	**NUT**, HEX CON WA (1/4-20)	
67.	16.190	**CHANNEL**, WDO FRT GDE-LH	6274455
	16.190	**CHANNEL**, WDO FRT GDE-RH	6274456
68.	8.977	**SCREW**, HWH (1/4-20X1/2)	

© 1990 GENERAL MOTORS SERVICE PARTS OPERATIONS—LIGHT TRUCK 52R

NOTES

BLANK PAGE

TA16-036
080488

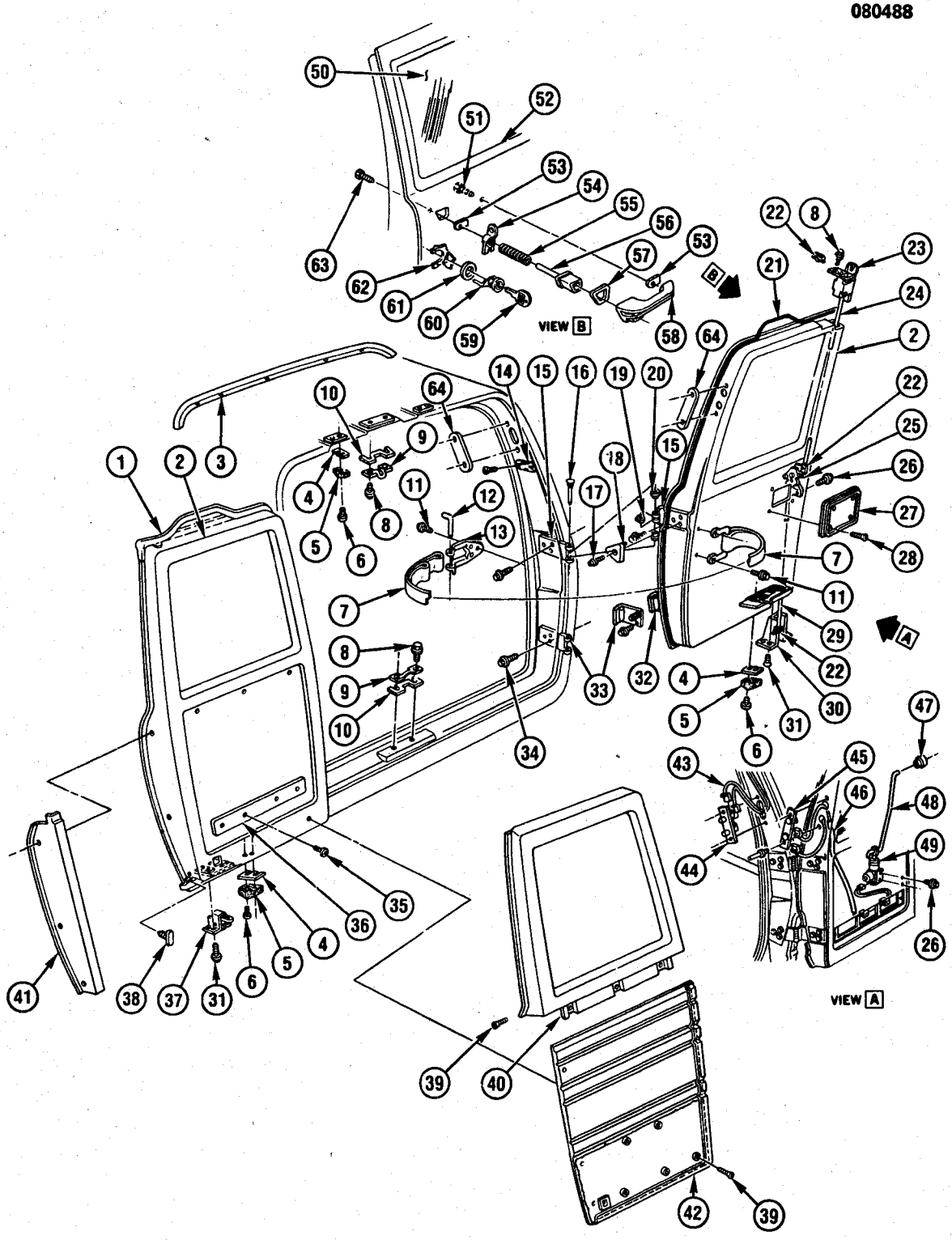

TA16-036

© 1990 GENERAL MOTORS SERVICE PARTS OPERATIONS—LIGHT TRUCK 52R

1985-1986 CK(06) DOOR HARDWARE & TRIM/SIDE REAR
1987-1990 RV(06) DOOR HARDWARE & TRIM/SIDE REAR

NOTE: C49-DEFOGGER/REAR WINDOW ELECTRIC.
NOTE: YE9-EQUIPMENT PACKAGE/COMFORT, CONVENIENCE & DECOR.

1.	16.227	**WEATHERSTRIP**, R/D-LH	9764130
2.	16.160	**DOOR WLDG**, RR (SEE CATALOG)	
3.	16.227	**WEATHERSTRIP**, R/D TOP	14016509
4.	16.400	**SPACER**, R/D BPR	3762857
5.	16.400	**SPACER**, R/D	3905665
6.	8.913	**SCREW**, PAN HD C/REC MA (10-24X.75)	9422540
7.	16.437	**STRAP KIT**, R/D CHK (INCL #12,13)	370349
8.	16.335	**BOLT**, R/D LAT STKR	9425117
	8.931	**WASHER**, SPR LK (5/16, PL)	9439511
9.	16.335	**STRIKER**, R/D LAT	351022
10.	16.335	**SPACER**, R/D LAT STRIKER	3951997
11.	8.900	**BOLT**, HEX (1/4-20X3/4, 300M)	9425113
	8.929	**WASHER**, FL (.28X.50X.030)	507295
12.	16.437	**PIN**, R/D CHK STRAP	3794770
13.	16.437	**BRACKET**, R/D CHK STRAP	365979
14.	16.494	**SWITCH**, DOME LP	15591112
15.	16.320	**HINGE**, R/D UPR-LH & RH (INCL #16,19,20)(*1)	15598713
16.	16.323	**PIN**, DR HINGE BUSH (10.466)	6271989
17.	8.977	**SCREW**, RD WA HD C/RES (M4.2X1.41X13)	11503284
18.	16.345	**PLUG**, R/D HGE ACC HOLE	15598710
19.	16.323	**STOP**, R/D HGE	334169
20.	16.323	**BUSHING**, DR HGE PIN (10.464)	9721917
21.	16.227	**WEATHERSTRIP**, R/D-RH	9764131
22.	16.341	**CLIP**, R/D LAT REM CONT ROD (17.198)	15545178
23.	16.330	**LATCH**, R/D UPR	14063114
24.	16.332	**ROD**, R/D LAT UPR	14037233
25.	16.330	**LOCK**, R/D LAT REM	15628725
26.	8.900	**SCREW**, HEX W/CON WA (1/4-20X1/2, 275M PZOR)	9439770
27.	16.332	**COVER**, R/D ACC HOLE	14027385
28.	8.977	**SCREW**, PAN HD C/REC TAP (M4.2X1.41X13, POR)	11504547
29.	16.332	**ROD**, R/D LAT LWR	14057419
30.	16.330	**LATCH**, R/D LWR-RH	14057420
31.	8.908	**SCREW**, FL HD C/REC MA (5/16-18X3/4, ZC)	156431
32.	16.325	**GROMMET**, R/D HGE	14039970
33.	16.320	**HINGE**, R/D LWR (INCL #3,4,5)(*1)	15598711
34.	16.320	**BOLT**, DR HGE (3/8-16X1 1/8)(1985-88)(3.015)	6271980
	16.320	**BOLT**, DR HGE (3/8-16X1 1/8)(3.015)	6271980
35.	8.977	**SCREW**, PAN HD C/REC TAP (M4.2X1.41X13, POR)	11504547
36.	16.165	**COVER**, R/D ACC HOLE (LWR)	14027395
37.	16.330	**LATCH**, R/D LWR-LH	14063113
38.	N.S.	**FASTENER**, R/D W/STR	
39.	8.977	**SCREW**, OV HD C/REC (M4.2X1.41X20)	11503537
40.	16.166	**MOLDING**, R/D GARN-LH (BLUE)(W/YE9)(PAINT AS REQD)	15623947
	16.166	**MOLDING**, R/D GARN-RH (BLUE)(W/YE9)(PAINT AS REQD)	14037206
41.	16.166	**MOLDING**, R/D LWR GARN-LH (BLUE)(W/YE9)(PAINT AS REQD)	14068267
	16.166	**MOLDING**, R/D LWR GARN-RH (BLUE)(W/YE9)(PAINT AS REQD)	14068266
42.	16.165	**PANEL**, R/D TR (W/YE9)	
43.	N.S.	**WIRE ASM**, R/D PWR LK EXT (SERVICED BY 16 GA WIRE & THE FOLLOWING CONNECTORS)	
	8.965	**CONNECTOR**, BDY WRG HARNESS	8911773
	8.965	**CONNECTOR**, ENGINE COMPARTMENT	8911256
44.	16.263	**CONTACT**, PWR DR LK DR	469394
45.	16.263	**CONTACT**, PWR DR LK PLR	469395
46.	16.263	**HARNESS**, R/D PWR DR LK WRG	12041696
47.	16.157	**RETAINER**, R/D LK REM CONT LK ROD (12.242)	20022600
48.	16.341	**ROD**, R/D LK (W/PWR DR LK)	15593881
49.	16.263	**ACTUATOR**, PWR R/D LK (10.485)	22020256
	16.263	**BRACKET**, R/D PWR LK ACTUATOR	22049759
50.	16.464	**GLASS**, R/D-LH (TINTED)	14022873
	16.464	**GLASS**, R/D-RH (TINTED)	14022874
	16.464	**GLASS**, R/D-LH (DEEP TINT)	14022875
	16.464	**GLASS**, R/D-RH (DEEP TINT)	14022876
	16.190	**WINDOW**, RR DR-LH (W/C49)(1990)	15614271
	16.190	**WINDOW**, RR DR-RH (W/C49)(1990)	15614272
51.	8.977	**SCREW**, HEX W/CON WA (1/4-20X.62, 275M PZOR)	9439771
52.	16.470	**SEAL**, R/D GLS W/TINTED WDO	362495
	16.470	**SEAL**, R/D GLS W/DEEP TINT WDOS (1985-87)	362495
	16.470	**SEAL**, R/D GLS W/DEEP TINT WDOS	362495
53.	16.353	**GASKET**, R/D LK O/S HDL	6258562

© 1990 GENERAL MOTORS SERVICE PARTS OPERATIONS—LIGHT TRUCK 52R

54.	16.350	**RETAINER**, O/S LK HDL PUSH BUT SPR	6272588
55.	16.353	**SPRING**, R/D O/S HDL PUSH BUT	3970796
56.	16.353	**BUTTON**, R/D LK O/S HDL PUSH	6274818
57.	16.353	**SEAL**, SI R/D LK O/S HDL PUSH BUT	15593878
58.	16.350	**HANDLE**, R/D LK O/S (INCL #54,55,56,57)	6274816
59.	2.187	**KEY**, BLANK OVAL HEAD	1154611
60.	16.328	**CYLINDER**, R/D LK (BRIGHT FINISH)	9632729
61.	10.550	**GASKET**, DR LK CYL	15646921
62.	16.353	**RETAINER**, R/D LK CYL (10.551)	9728247
63.	8.900	**SCREW**, HEX HD MA (.250-20X1.25)	9433298
64.	16.332	**COVER**, R/D LK ACC HOLE	15593597

NOTE 1: WHEN USED ON RH SIDE, REVERSE PIN.

© 1990 GENERAL MOTORS SERVICE PARTS OPERATIONS—LIGHT TRUCK 52R

TA16-046
062790

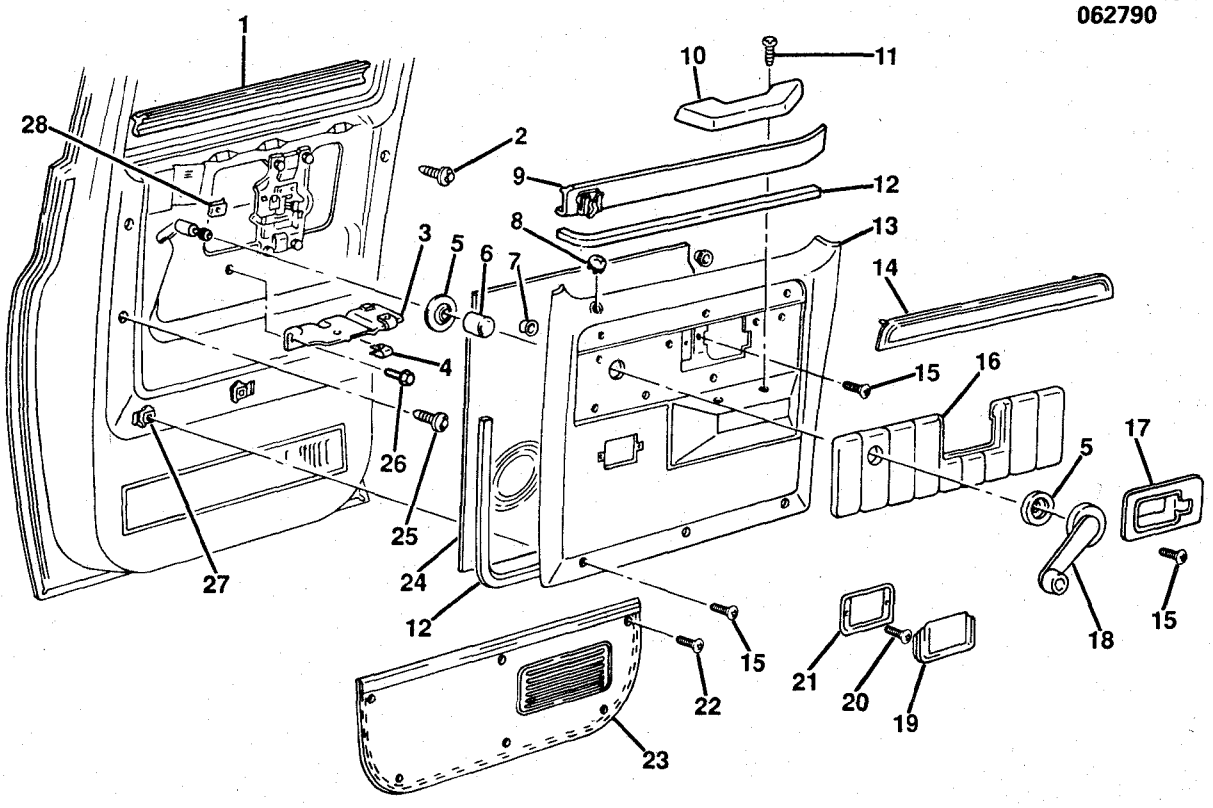

TA16-046

1985-1986 CK(06-43) DOOR TRIM/SIDE REAR
1987-1991 RV(06-43) DOOR TRIM/SIDE REAR

1.	10.694	**WEATHERSTRIP** ,RR S/D WDO OTR-LH (W/AJ1 DEEP TINT WINDOW)	325365
	10.694	**WEATHERSTRIP** ,RR S/D WDO OTR-RH (W/AJ1 DEEP TINT WINDOW)	325366
2.	16.712	**FASTENER** , DR TR PNL (14.683)	15600382
3.	16.155	**BRACKET** , SI R/D A/RST-LH	364349
	16.155	**BRACKET** , SI R/D A/RST-RH	364350
4.	8.921	**NUT** , U SHAPE (10-12, ZC)	9423053
5.	16.270	**PLATE** , WDO REG HDL BRG	14010954
6.	16.270	**SPACER** , SI R/D WDO REG HDL	364372
7.	8.921	**NUT** , MET SKW FLG (M5X15, PHOS)	11501047
8.	16.157	**FERRULE** , SI R/D LK REM LK ROD	330485
10.	16.155	**ARM REST** , SI R/D-LH (BLUE)(PAINT TO MATCH)(*1)	14026421
	16.155	**ARM REST** , SI R/D-RH (BLUE)(PAINT TO MATCH)(*1)	14026422
11.	8.977	**SCREW** , PAN HD C/REC TAP (#10-16X.75)	9414724
13.	16.165	**PANEL** , SI R/D TR-LH (BLUE)(EXC YE9)(PAINT TO MATCH)(*1)	15602023
	16.165	**PANEL** , SI R/D TR-RH (BLUE)(EXC YE9)(PAINT TO MATCH)(*1)	15602024
	16.165	**PANEL** , SI R/D TR-LH (BLUE)(W/YE9)(PAINT TO MATCH)(*1)	14057331
	16.165	**PANEL** , SI R/D TR-RH (BLUE)(W/YE9)(PAINT TO MATCH)(*1)	14057332
14.	16.166	**INSERT** , SI R/D TR PNL (W/YE9)(SEE CATALOG)	
15.	8.977	**SCREW** , OV HD C/REC (M4.2X1.41X20)	11503537
16.	16.166	**INSERT** , SI R/D TR PNL-LH (BLUE)(W/YE9)(*1)	14043861
	16.166	**INSERT** , SI R/D TR PNL-RH (BLUE)(W/YE9)(*1)	14043862

© 1990 GENERAL MOTORS SERVICE PARTS OPERATIONS—LIGHT TRUCK 52R

17.	16.345	**BEZEL**, SI R/D HDL ACC HOLE-LH (BLACK)(W/YE9)	15606435
	16.345	**BEZEL**, SI R/D HDL ACC HOLE-RH (BLACK)(W/YE9)	15606436
18.	16.270	**HANDLE**, WDO REG	14030586
20.	8.977	**SCREW**, OV HD C/REC TAP (M4.2X1.41X16)	11501165
21.	16.120	**BEZEL**, SI R/D ASH TRAY	20599502
22.	8.977	**SCREW**, OV HD C/REC (M4.2X1.41X13)	11509608
23.	16.165	**CARPET**, RR S/D TR PNL-LH (BLUE)(W/YE9)(1987-88)(*1)	14057373
	16.165	**CARPET**, RR S/D TR PNL-RH (BLUE)(W/YE9)(1987-88)(*1)	14057374
25.	16.165	**RETAINER**, SI R/D TR PNL	363137
26.	8.900	**BOLT**, HEX HD MA (1/4-20X1/2)	9437917
27.	16.165	**RETAINER**, SI R/D TR PNL	15590422
28.	8.921	**NUT**, U SHAPE (M4.2X1.41X.065, ZOR)	52351724

NOTE 1: FOR ADDITIONAL PART NUMBERS & COLORS REFER TO CATALOG.

RPO DEFINITIONS
YE9 - CONVENIENCE PKG, COMFORT & DECOR LEVEL #3

© 1990 GENERAL MOTORS SERVICE PARTS OPERATIONS—LIGHT TRUCK 52R

NOTES

BLANK PAGE

TZR16-14
072090

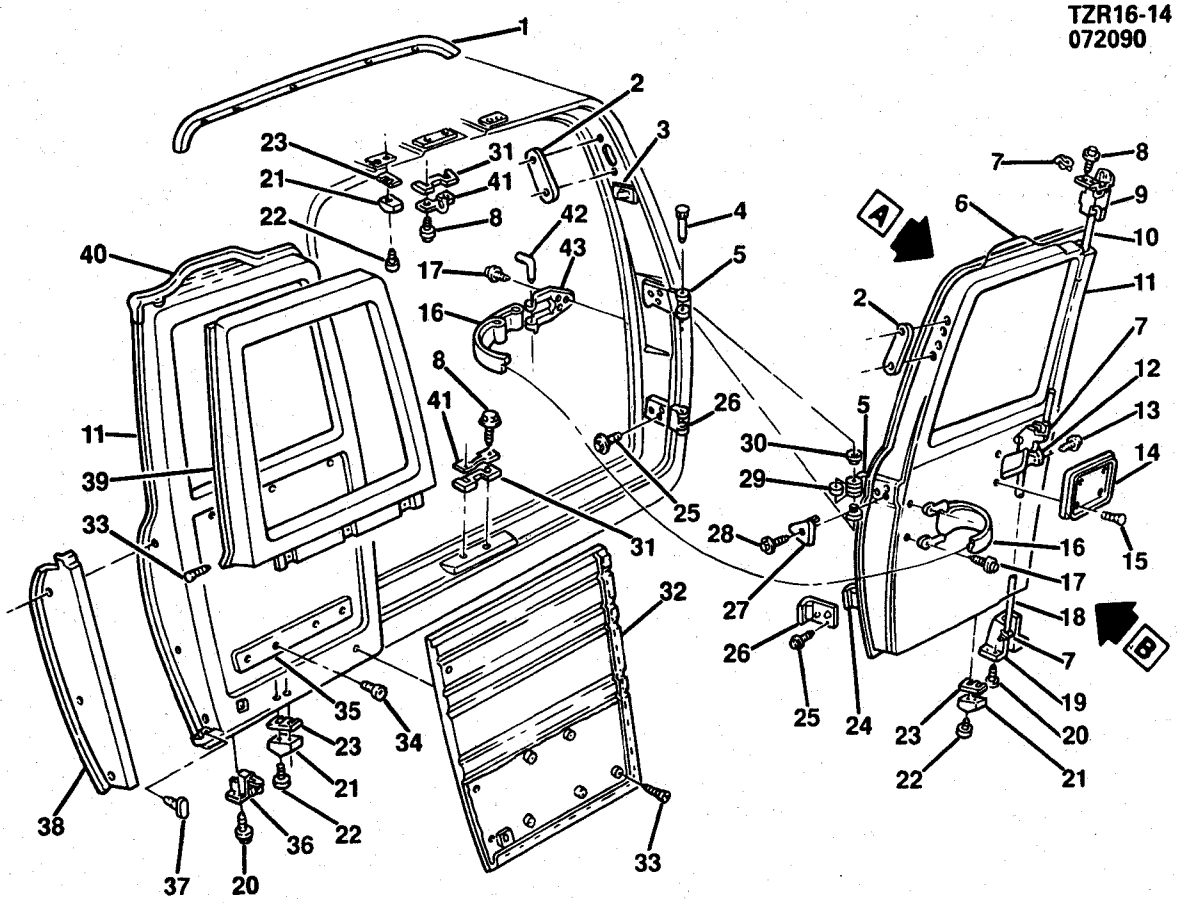

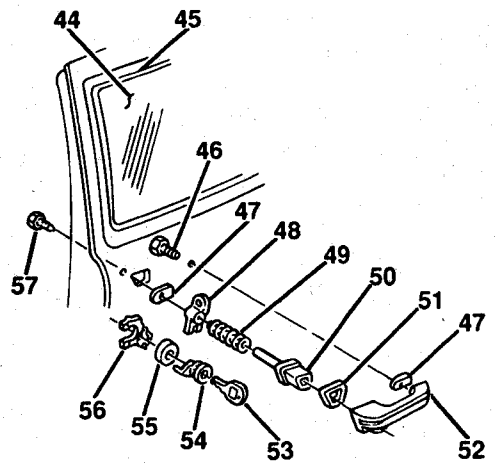

VIEW A

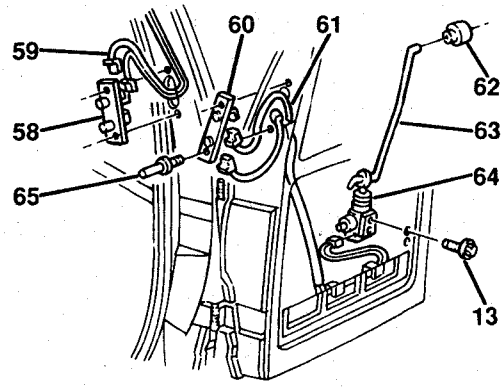

VIEW B

TZR16-14

1985-1986 CK(06) DOOR HARDWARE/REAR
1987-1991 RV(06) DOOR HARDWARE/REAR

1.	16.227	**WEATHERSTRIP**, R/D TOP	14016509
2.	16.332	**COVER**, R/D LK ACC HOLE	15593597
3.	16.494	**SWITCH**, DOME LP	15591112
4.	16.323	**PIN**, DR HINGE BUSH (10.466)	6271989
5.	16.320	**HINGE**, R/D UPR-LH & RH (INCL #4,29,30)(*1)	15598713
6.	16.227	**WEATHERSTRIP**, R/D-RH	9764131
7.	16.341	**CLIP**, R/D LAT REM CONT ROD (17.198)	15545178
8.	8.900	**BOLT**,HEX,5/16-18X.88,3/4 THD,300M,PX	9442184
	8.931	**WASHER**, SPR LK (5/16, PL)	9439511
9.	16.330	**LATCH**, R/D UPR	14063114
10.	16.332	**ROD**, R/D LAT UPR	14037233
11.	16.160	**DOOR**,RR(-LH)	15620093
	16.160	**DOOR**,RR(-RH)	15620094
12.	16.330	**LOCK**, R/D LAT REM	15628725
13.	8.900	**SCREW**, HEX W/CON WA (1/4-20X1/2, 275M PZOR)	9439770
14.	16.332	**COVER**, R/D ACC HOLE	14027385
15.	8.977	**SCREW**, PAN HD C/REC TAP (M4.2X1.41X13, POR)	11504547
16.	16.437	**STRAP KIT**, R/D CHK (INCL #42,43)	370349
17.	8.900	**BOLT**, HEX (1/4-20X3/4, 300M)	9425113
	8.929	**WASHER**, FL (.28X.50X.030)	507295
18.	16.332	**ROD**, R/D LAT LWR	14057419
19.	16.330	**LATCH**, R/D LWR-RH	14057420
20.	8.908	**SCREW**, FL HD C/REC MA (5/16-18X3/4, ZC)	156431
21.	16.400	**BUMPER**,R/D	3905665
22.	8.913	**SCREW**, PAN HD C/REC MA (10-24X.75)	9422540
23.	16.400	**SPACER**, R/D BPR	3762857
24.	16.325	**GROMMET**, R/D HGE	14039970
25.	16.320	**BOLT**, DR HGE (3/8-16X1 1/8)(3.015)	6271980
26.	16.320	**HINGE**, R/D LWR (INCL #4,29,30)(*1)	15598711
27.	16.345	**PLUG**, R/D HGE ACC HOLE	15598710
28.	8.977	**SCREW**, RD WA HD C/RES (M4.2X1.41X13)	11503284
29.	16.323	**STOP**, R/D HGE	334169
30.	16.323	**BUSHING**, DR HGE PIN (10.464)	9721917
31.	16.335	**SPACER**, R/D LAT STRIKER	3951997
32.	16.165	**PANEL**, R/D TR (W/YE9)(SEE CATALOG)	
33.	8.977	**SCREW**, OV HD C/REC (M4.2X1.41X20)	11503537
34.	8.977	**SCREW**, PAN HD C/REC TAP (M4.2X1.41X13, POR)	11504547
35.	16.165	**COVER**, R/D ACC HOLE (LWR)	14027395
36.	16.330	**LATCH**, R/D LWR-LH	14063113
37.	N.S.	**FASTENER**, R/D W/STR	
38.	16.166	**MOLDING**, R/D LWR GARN-LH (BLUE)(W/YE9)(PAINT AS REQD)	14068267
	16.166	**MOLDING**, R/D LWR GARN-RH (BLUE)(W/YE9)(PAINT AS REQD)	14068266
39.	16.166	**MOLDING**, R/D GARN-LH (BLUE)(W/YE9)(PAINT AS REQD)	15672731
	16.166	**MOLDING**, R/D GARN-RH (BLUE)(W/YE9)(PAINT AS REQD)	15672732
40.	16.227	**WEATHERSTRIP**, R/D-LH	9764130
41.	16.335	**STRIKER**, R/D LAT	351022
42.	16.437	**PIN**, R/D CHK STRAP	3794770
43.	16.437	**BRACKET**, R/D CHK STRAP	365979
44.	16.464	**GLASS**, R/D-LH (TINTED)	14022873
	16.464	**GLASS**, R/D-RH (TINTED)	14022874
	16.464	**GLASS**, R/D-LH (DEEP TINT)	14022875
	16.464	**GLASS**, R/D-RH (DEEP TINT)	14022876
	16.190	**WINDOW**, RR DR-LH (W/REAR WINDOW DEFOGGER C49)(1990-91)	15614271
	16.190	**WINDOW**, RR DR-RH (W/REAR WINDOW DEFOGGER C49)(1990-91)	15614272
45.	16.470	**SEAL**, R/D GLS (W/DEEP TINT WDOS)	362495
46.	8.977	**SCREW**, HEX W/CON WA (1/4-20X.62, 275M PZOR)	9439771
47.	16.353	**GASKET**, R/D LK O/S HDL(CUT AS REQD)	6258562
48.	16.350	**RETAINER**, O/S LK HDL PUSH BUT SPR	6272588
49.	16.353	**SPRING**, R/D O/S HDL PUSH BUT	3970796
50.	16.353	**BUTTON**, R/D LK O/S HDL PUSH	6274818
51.	16.353	**SEAL**, SI R/D LK O/S HDL PUSH BUT	15593878
52.	16.350	**HANDLE**, R/D LK O/S (INCL #48,49,50,51)	6274816
53.	2.187	**KEY**, BLANK OVAL HEAD	1154611
54.	16.328	**CYLINDER**, R/D LK (BRIGHT FINISH)	9632729
55.	10.550	**GASKET**, DR LK CYL	15646921
56.	16.353	**RETAINER**, R/D LK CYL (10.551)	9728247
57.	8.900	**SCREW**, HEX HD MA (.250-20X1.25)	9433298
58.	16.263	**CONTACT**, PWR DR LK DR	469394
59.	N.S.	**WIRE ASM**, R/D PWR LK EXT (SERVICED BY 16 GA WIRE & THE FOLLOWING CONNECTORS)	
	8.965	**CONNECTOR**,BDY WRG HARNESS	8911773
	8.965	**CONNECTOR**,ENGINE COMPARTMENT	8911256

© 1990 GENERAL MOTORS SERVICE PARTS OPERATIONS—LIGHT TRUCK 52R

60.	16.263	**HARNESS**, R/D PWR DR LK WRG	12041696
61.	16.263	**HARNESS**, PWR DR LK SI R/D WRG	12041696
62.	16.157	**RETAINER**, R/D LK REM CONT LK ROD (12.242)	12338081
63.	16.341	**ROD**, R/D LK (W/PWR DR LK)	15593881
64.	16.263	**ACTUATOR**, PWR R/D LK (10.485)	22020256
	16.263	**BRACKET**, R/D PWR LK ACTUATOR	22049759

NOTE 1: WHEN USED ON RH SIDE, REVERSE PIN.

RPO DEFINITIONS
C49-DEFOGGER/REAR WINDOW ELECTRIC.
YE9-EQUIPMENT PACKAGE/COMFORT, CONVENIENCE & DECOR.
ZW9-BASE BODY OR CHASSIS

© 1990 GENERAL MOTORS SERVICE PARTS OPERATIONS—LIGHT TRUCK 52R

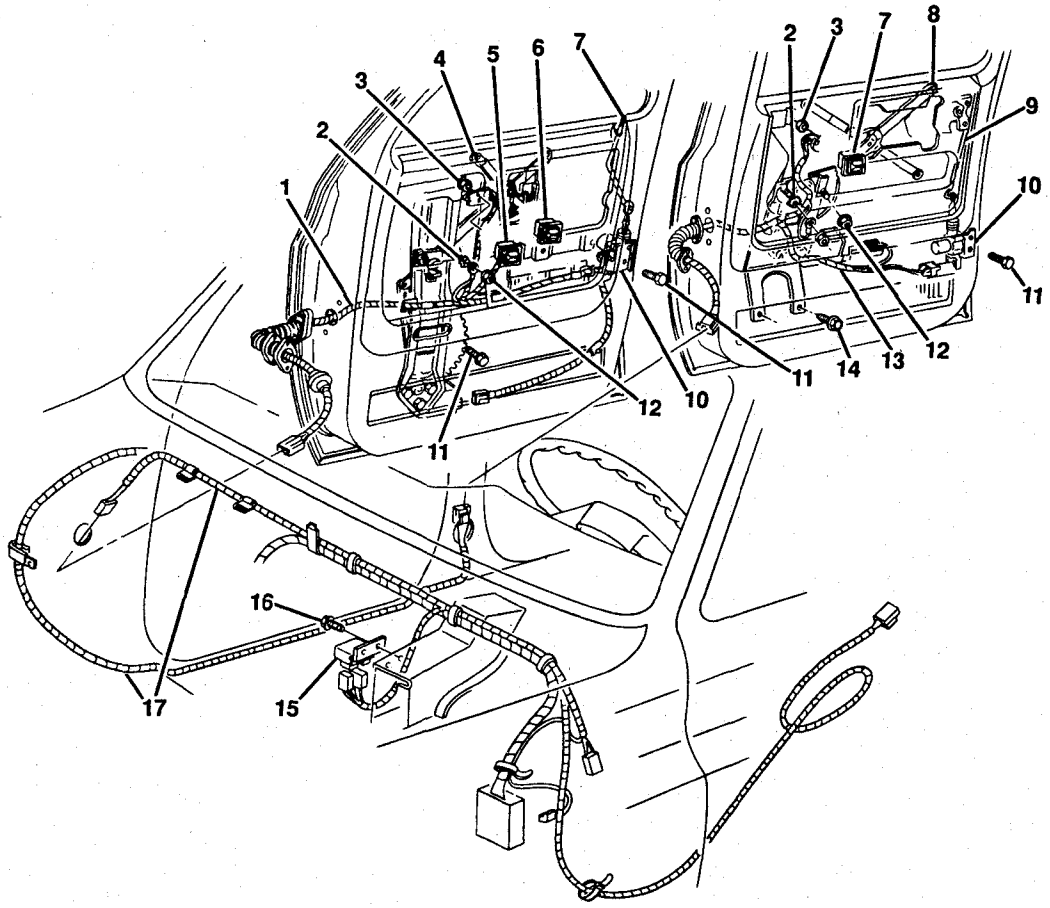

T16-136

1985-1986 CK POWER WINDOW & DOOR LOCK SYSTEM
1987-1991 RV POWER WINDOW & DOOR LOCK SYSTEM

1.	16.263	**HARNESS**, PWR WDO & PWR DR LK DR(*1)	12064543
2.	8.932	**WASHER**, EXT TOOTH LK (1/4)	121753
3.	16.263	**NUT**, WDO & DR LK SW WIRE CONN (10.474)	1734573
4.	N.S.	**REGULATOR ASM**, SI F/D WDO (SERVICED BY THE FOLLOWING COMPONETS)	
	10.783	**MOTOR**, F/D WDO REG(1982-91)F	22062528
6.	16.263	**SWITCH**, W/ESCUTCHEON, ELEC LK CONT	20043224
7.	16.341	**ROD**, LK REM LK	458053
8.		**REGULATOR ASM**, SI R/D WDO (SERVICED BY THE FOLLOWING COMPONENTS)	
9.	16.341	**ROD**, SI DR LK REM LK	14003037
10.	16.263	**ACTUATOR**, ELEC LK (10.485)	22020256
	16.263	**BRACKET**, PWR DR LK ACTUATOR	22049757
11.	8.977	**SCREW**, HEX (1/4-20X1/2)	9439770
	8.931	**WASHER**, LK (.26X.489, ZOR)	9439510
12.	8.917	**NUT**, HEX W/CON WA (1/4-20, PZOR)	14051876
13.	N.S.	**WIRE**, PWR WDO & PWR DR LK RR SI DR	
14.	8.900	**BOLT**, HEX W/CON SPR WA (1/4-20X1/2, 275M)	9437917
15.	16.263	**RELAY**, PWR DR LK	14056552
16.	8.977	**SCREW**, (#10-16X3/8)	11505323
17.	16.263	**HARNESS ASM**, PWR WDO & PWR DR LK BODY(*1)	12064536

NOTE 1: FOR ADDITIONAL PART NUMBERS REFER TO CATALOG.

© 1990 GENERAL MOTORS SERVICE PARTS OPERATIONS—LIGHT TRUCK 52R

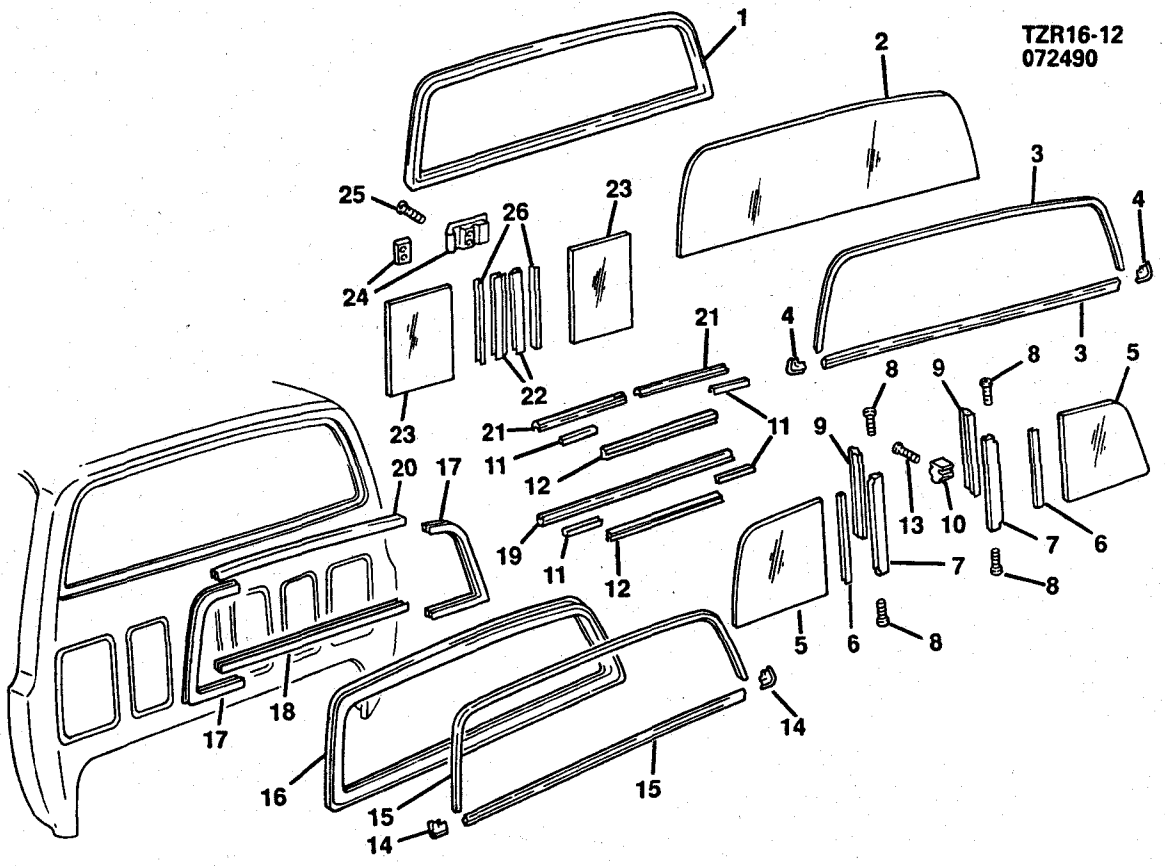

TZR16-12

1985-1986 CK(03-43) WINDOWS (REAR)
1987-1991 RV(03-43) WINDOWS (REAR)

1.	16.470	**WEATHERSTRIP**, RR GLS (EXC SLIDING REAR WINDOW A28)(1985-91)	15590421
	16.470	**WEATHERSTRIP**, RR GLS (W/RVL MLDG)(1985-87)	363110
2.	16.464	**GLASS**, RR WDO (CLEAR)(EXC SLIDING REAR WINDOW A28)	363107
	16.464	**GLASS**, RR WDO (TINTED)(EXC SLIDING REAR WINDOW A28)	363108
3.	16.475	**MOLDING**, RR GLS W/S (179" CUT AS REQD)(16.041)	464471
4.	16.475	**CAP**, RR GLS W/S (1985-86)	337837
5.	16.464	**GLASS**, STAT GLS (W/A28)	15593334
6.	16.470	**WEATHERSTR**, STAT GLS (W/A28)	15593320
7.	16.460	**POST**, WDO GLS (INCL #9)(W/A28)	15593314
8.	16.475	**SCREW**, CHAN TO POST (#6-20X3/4)(W/A28)	15593339
9.	N.S.	**SEAL**, BULB STAT GLS (PART OF #12)	
10.	N.S.	**STOP**, CHAN GLS (PART OF #20)	
11.	16.470	**WEATHERSTRIP**, RR WDO STAT GLS (W/A28)	15593319
12.	16.470	**FILLER**, GLS TRACK OTR (W/A28)	15593315
13.	N.S.	**PIN**, GLS STOP (PART OF #20)	
14.	16.460	**CAP**, W/STRIP MLDG CORNER (W/A28)	15593316
15.	16.475	**MOLDING**, GLS W/STRIP (79" CUT AS REQD)(W/A28)	15589915
16.	16.470	**WEATHERSTRIP**, SLDG WDO ASM (W/A28)	15593323
17.	16.475	**CAP**, WDO SLDG END-LH (W/A28)	15593331
	16.475	**CAP**, WDO SLDG END-RH (W/A28)	15593332
18.	16.470	**CHANNEL**, WDO GLS LWR (INCL #21)(W/A28)	15593313
19.	N.S.	**FILLER**, GLS CHAN LWR (PART OF #18)	
20.	16.470	**CHANNEL**, WDO GLS UPR (INCL #10,13)(W/A28)	15593312
21.	N.S.	**FILLER**, GLS CHAN UPR (PART OF #18)	
22.	N.S.	**RAIL**, GLS (PART OF #23)	
23.	16.464	**GLASS**, RR WDO SLDG-LH (W/A28)	15593327
	16.464	**GLASS**, RR WDO SLDG-RH (W/A28)	15593328
24.	16.460	**LATCH**, RR WDO GLS	15615506
25.	N.S.	**SCREW**, FL HD C/REC TAP (#4-40X3/8)	
26.	N.S.	**FILLER**, GLS RAIL (PART OF #23)	

RPO DEFINITIONS
A28 - WINDOW/REAR FULL WIDTH, SLIDING.

© 1990 GENERAL MOTORS SERVICE PARTS OPERATIONS—LIGHT TRUCK 52R

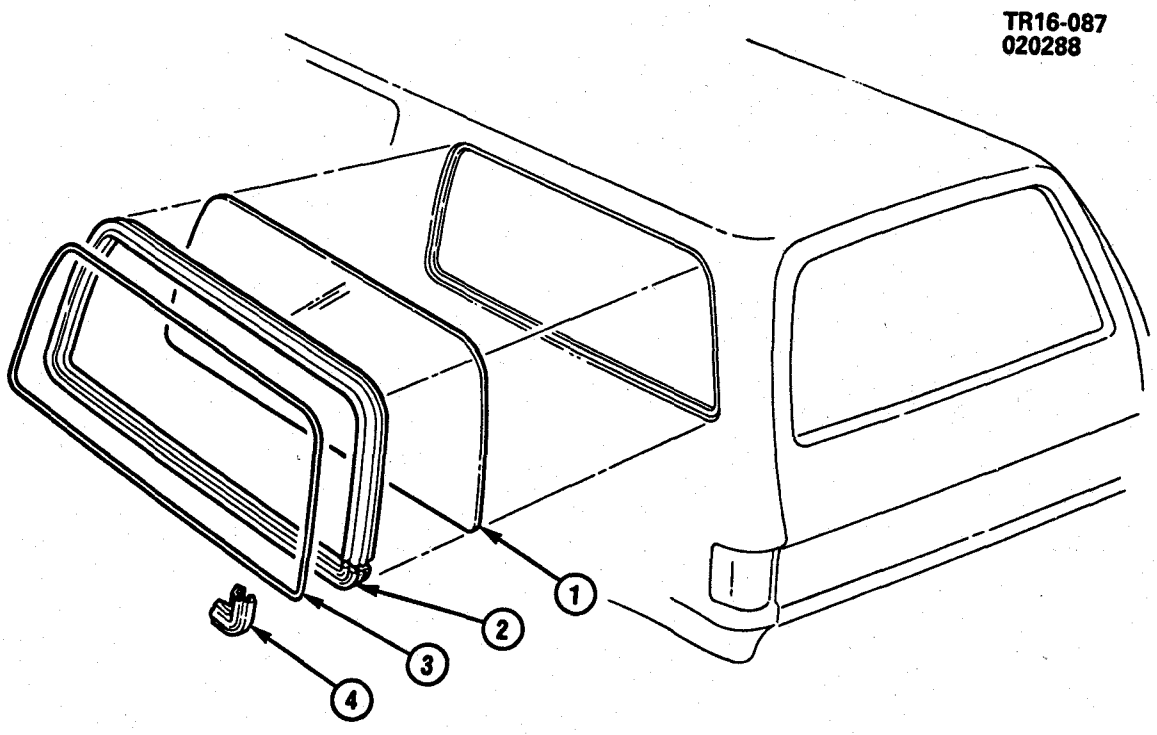

TR16-087

1988-1990 RV(06) WINDOWS-BODY SIDE

NOTE: AA3-WINDOW/DEEP TINT ALL EXC W/S, F/D & R/END.
NOTE: AJ1-WINDOW/DEEP TINT ALL EXC W/S & DOORS.

1.	16.460	**GLASS**, BODY SI WDO-LH (TINTED)	14022867
	16.460	**GLASS**, BODY SI WDO-RH (TINTED)	14022868
	16.460	**GLASS**, BODY SI WDO-LH (W/AA3,AJ1)	14022869
	16.460	**GLASS**, BODY SI WDO-RH (W/AA3,AJ1)	14022870
2.	16.460	**WEATHERSTRIP**, BODY SI WDO GLS (W/TINTED GLASS)	14022871
	16.460	**WEATHERSTRIP**, BODY SI WDO GLS (W/AA3,AJ1)	357409
3.	16.041	**MOLDING**, BODY SI WDO REVEAL	466157
4.	16.460	**CAP**, BODY SI WDO GLS W/STR MLDG	361524

© 1990 GENERAL MOTORS SERVICE PARTS OPERATIONS—LIGHT TRUCK 52R

TZR16-11
070990

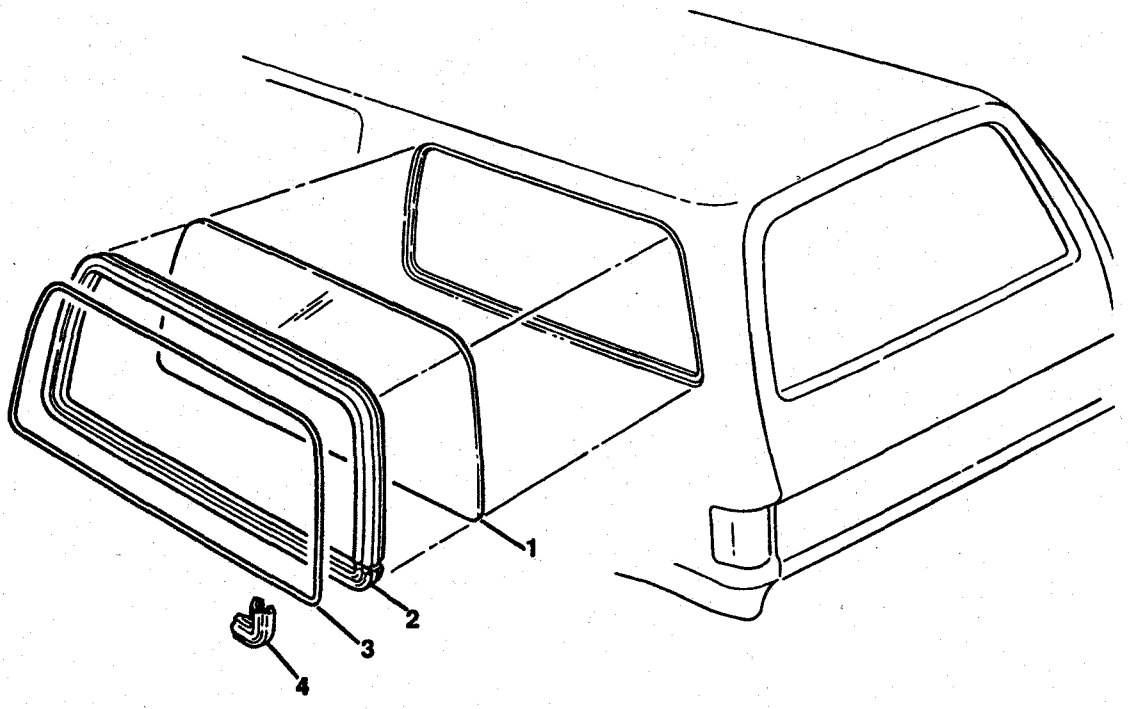

TZR16-11

1988-1991 RV(06) WINDOWS

1.	16.460	GLASS, BODY SI WDO-LH (EXC DEEP TINT WINDOWS AJ1)	14022867
	16.460	GLASS, BODY SI WDO-RH (EXC DEEP TINT WINDOWS AJ1)	14022868
	16.460	GLASS, BODY SI WDO-LH (W/DEEP TINT WINDOWS AJ1)	14022869
	16.460	GLASS, BODY SI WDO-RH (W/DEEP TINT WINDOWS AJ1)	14022870
2.	16.460	WEATHERSTRIP, BODY SI WDO GLS (EXC TINT WINDOWS AJ1)	14022871
	16.460	WEATHERSTRIP, BODY SI WDO GLS (W/DEEP TINT WINDOWS AJ1)	357409
3.	16.041	MOLDING, BODY SI WDO REVEAL(CUT AS REQD)	466157
4.	16.460	CAP, BODY SI WDO GLS W/STR MLDG	361524

RPO DEFINITIONS
AA3 - WINDOW/DEEP TINT ALL EXC W/S, F/D & R/END.
AJ1 - WINDOW/DEEP TINT ALL EXC W/S & DOORS.

© 1990 GENERAL MOTORS SERVICE PARTS OPERATIONS—LIGHT TRUCK 52R

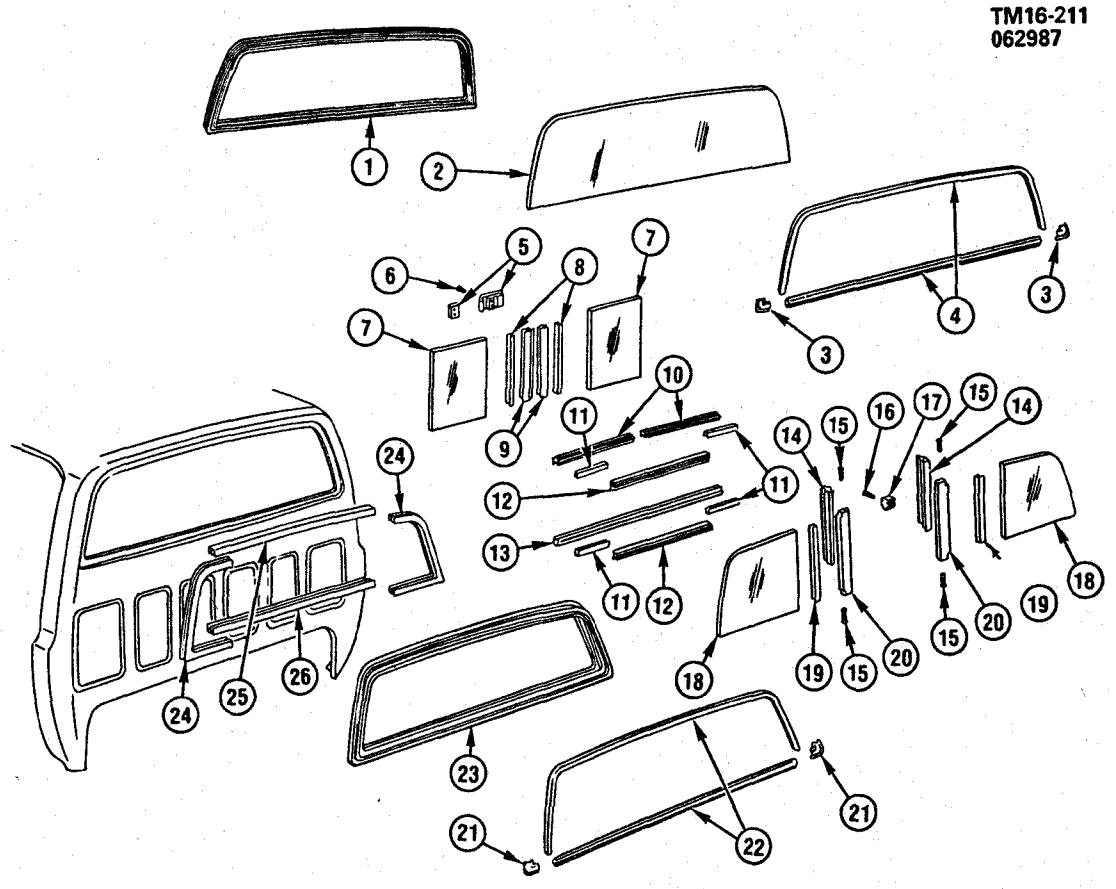

TM16-211

1985-1986 CK(03-43) WINDSHIELD & WINDOWS REAR
1987-1990 RV(03-43) WINDSHIELD & WINDOWS REAR

NOTE: A28-WINDOW/REAR FULL WIDTH, SLIDING.

1.	16.470	**WEATHERSTRIP**, RR GLS (EXC A28)	15590421
	16.470	**WEATHERSTRIP**, RR GLS (W/RVL MLDG)(1985-86)	363110
2.	16.464	**GLASS**, RR WDO (CLEAR)(EXC A28)	363107
	16.464	**GLASS**, RR WDO (TINTED)(EXC A28)	363108
3.	16.475	**CAP**, RR GLS W/S (CK)	337837
4.	16.475	**MOLDING**, RR GLS W/S (179" CUT AS REQD)(16.041)	464471
5.	16.460	**LATCH**, RR WDO GLS	15615506
6.	N.S.	**SCREW**, FL HD C/REC TAP (#4-40X3/8)	
7.	16.464	**GLASS**, RR WDO SLDG-LH (W/A28)	15593327
	16.464	**GLASS**, RR WDO SLDG-RH (W/A28)	15593328
8.	N.S.	**FILLER**, GLS RAIL (PART OF #7)	
9.	N.S.	**RAIL**, GLS (PART OF #7)	
10.	N.S.	**FILLER**, GLS CHAN UPR (PART OF #25)	
11.	16.470	**WEATHERSTRIP**, RR WDO STAT GLS (W/A28)	15593319
12.	16.470	**FILLER**, GLS TRACK OTR (W/A28)	15593315
13.	N.S.	**FILLER**, GLS CHAN LWR (PART OF #26)	
14.	N.S.	**SEAL**, BULB STAT GLS (PART OF #20)	
15.	16.475	**SCREW**, CHAN TO POST (#6-20X3/4)(W/A28)	15593339
16.	N.S.	**PIN**, GLS STOP (PART OF #25)	
17.	N.S.	**STOP**, CHAN GLS (PART OF #25)	
18.	16.464	**GLASS**, STAT GLS (W/A28)	15593334
19.	16.470	**WEATHERSTR**, STAT GLS (W/A28)	15593320
20.	16.460	**POST**, WDO GLS (INCL #14)(W/A28)	15593314
21.	16.460	**CAP**, W/STRIP MLDG CORNER)(W/A28)	15593316
22.	16.475	**MOLDING**, GLS W/STRIP (79" CUT AS REQD)(W/A28)	15589915
23.	16.470	**WEATHERSTRIP**, SLDG WDO ASM (W/A28)	15593323
24.	16.475	**CAP**, WDO SLDG END-LH (W/A28)	15593331
	16.475	**CAP**, WDO SLDG END-RH (W/A28)	15593332
25.	16.470	**CHANNEL**, WDO GLS UPR (INCL #10,16,17)(W/A28)	15593312
26.	16.470	**CHANNEL**, WDO GLS LWR (INCL #13)(W/A28)	15593313

© 1990 GENERAL MOTORS SERVICE PARTS OPERATIONS—LIGHT TRUCK 52R

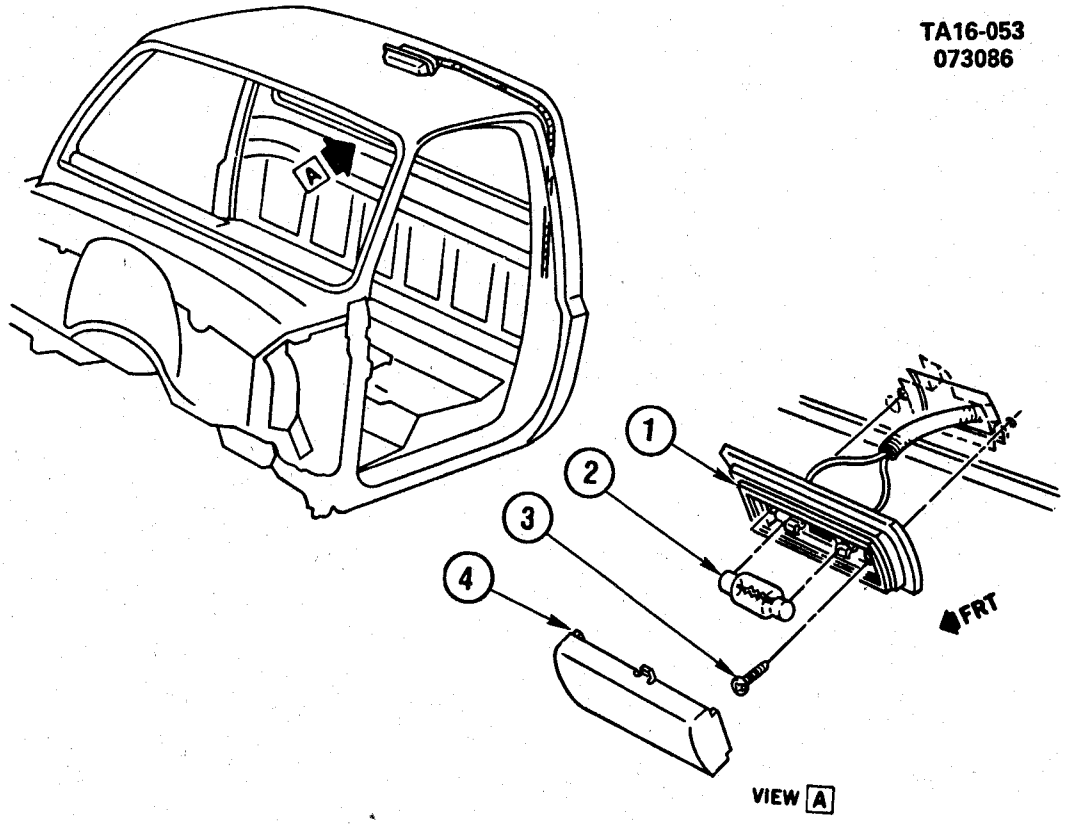

TA16-053

1985-1986 CK(03) LAMP/DOME
1987-1989 RV(03) LAMP/DOME

1.	16.494	HOUSING, LAMP DM	15591109
2.	8.991	BULB, LP (12CP)	9431808
3.	8.977	SCREW, PN HD C/R TAP (M4.2X1.41X25)	11500056
4.	16.495	LENS, DM LP	14074329

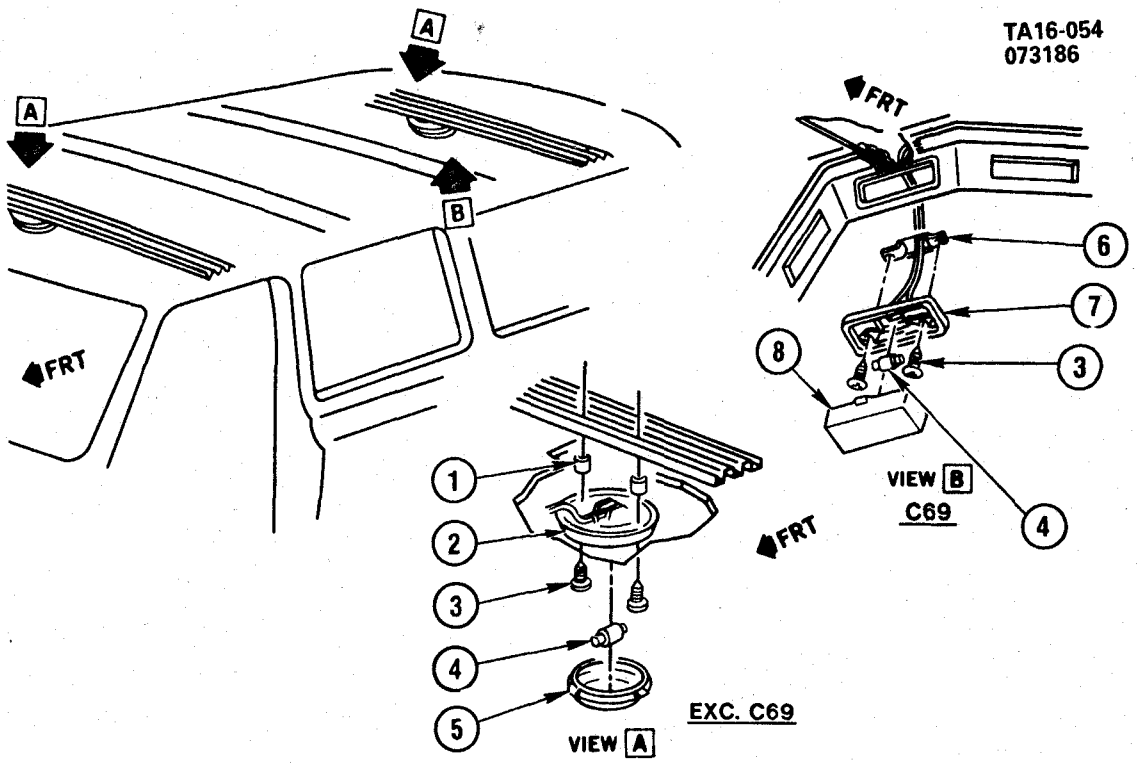

TA16-054

1985-1986 CK(06) LAMP/DOME
1987-1991 RV(06) LAMP/DOME

1.	16.494	**SPACER**, DOME LP	14057471
2.	16.494	**REFLECTOR**, DOME LP (ROUND)	20030351
	16.494	**REFLECTOR**, DM & RDG LP (DBL LENS)(11.927)(W/8G8)(*1)	20046494
3.	8.977	**SCREW**, PN HD C/R TAP (M4.2X1.41X25)	11500056
	8.977	**SCREW**, OV HD TORX TAP (M4.2X1.41X45)(*1)	22517337
4.	8.991	**BULB**, LP (12CP)	9431808
5.	16.490	**LENS**, DOME LP (11.928)	20013679
6.	8.921	**NUT**, U SHAPE (M4.2X1.41X.065 ZOR)(W/C69)	52351724
7.	16.494	**HOUSING**, DOME LP (11.927)(W/C69)	6270493
8.	16.495	**LENS**, DOME LP (11.928)(W/C69)	336201

NOTE 1: USED WITH PASSENGER DOME LAMP (8G8).

RPO DEFINITIONS
C69 - HVAC SYSTEM, AIR CONDITIONER ROOF MOUNTED
8G8 - LAMP, PASSENGER-DOME

© 1990 GENERAL MOTORS SERVICE PARTS OPERATIONS—LIGHT TRUCK 52R

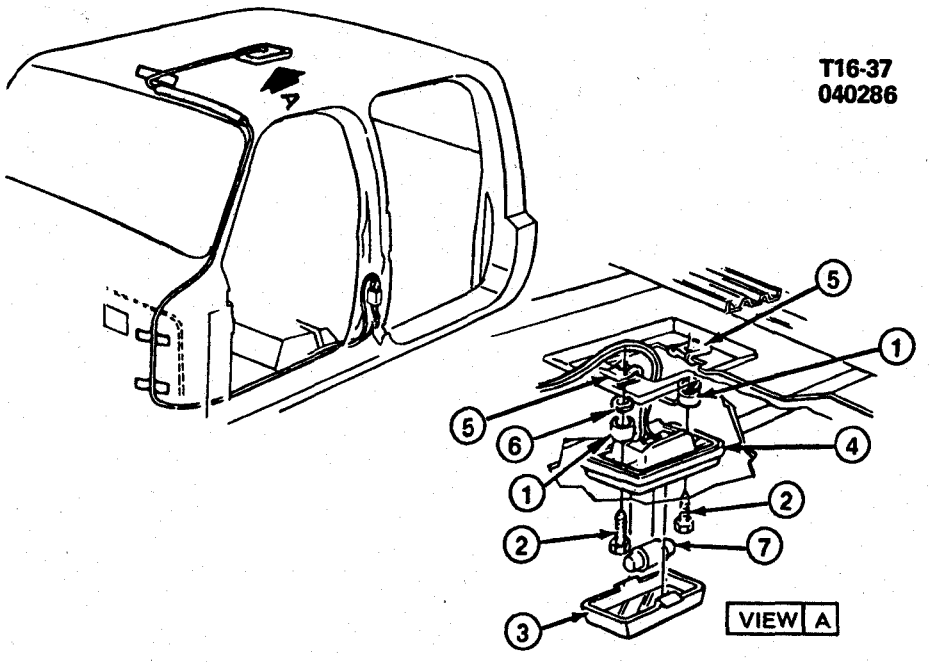

T16-37 5

1985-1986 CK(16-43) LAMP/DOME
1987-1991 RV(16-43) LAMP/DOME

1.	16.494	**SPACER**, DOME LAMP HSG (43)	2423054
2.	8.977	**SCREW**, PN HD C/R TAP (M4.2X1.41X25)	11500056
3.	16.495	**LENS**, LAMP	336201
4.	16.494	**HOUSING**, DOME LAMP	6270493
5.	8.921	**NUT**, SPR (M4.2X1.41X.065)	52351724
6.	N.S.	**WASHER**, RET (.110X.28X.011)	
7.	8.991	**BULB**, LAMP (12CP)	9431808

© 1990 GENERAL MOTORS SERVICE PARTS OPERATIONS—LIGHT TRUCK 52R

TR16-300
052389

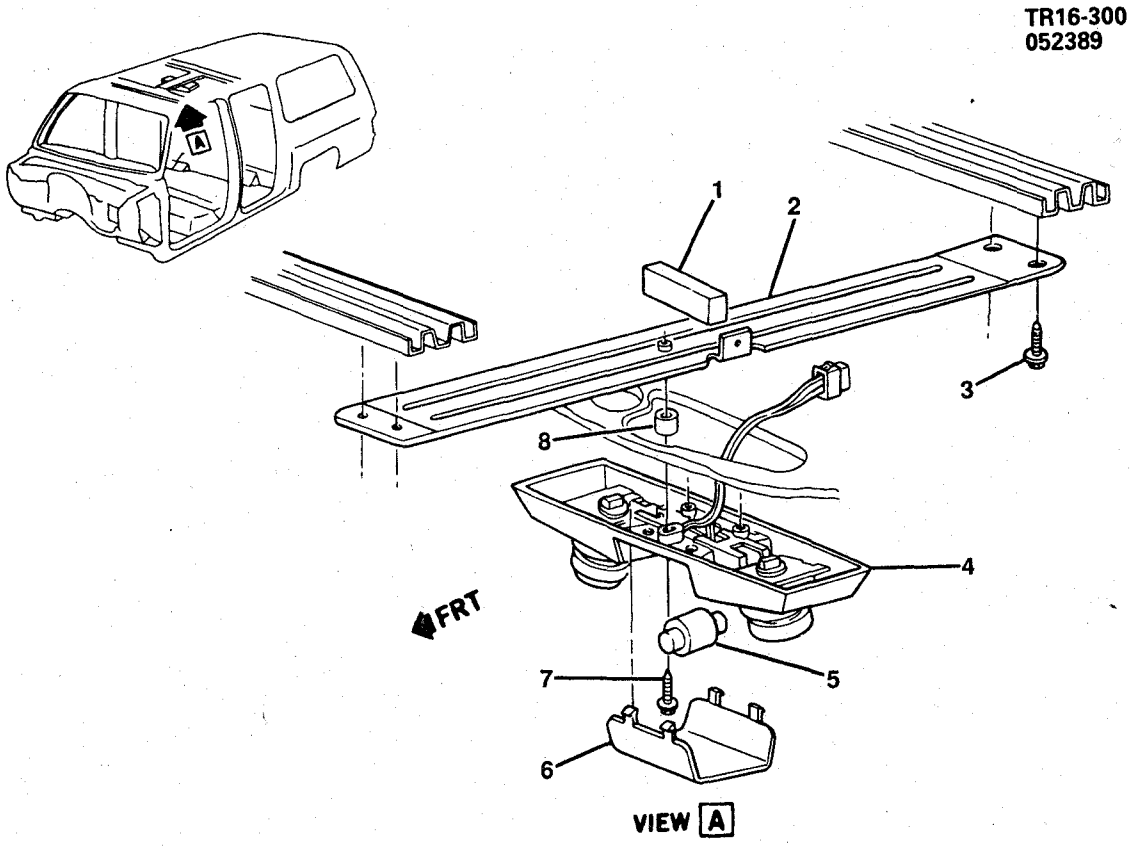

TR16-300

1989-1991 RV(06) LAMP/DOME & READING LAMP (W/A52,TR9)

1.	16.742	**INSULATOR**, ROOF PNL DM & RDG LP	14032744
2.	16.494	**BRACKET**, DOME & READING LAMP	15638271
3.	8.977	**SCREW**, HEX LG WA HD W/SLR (M4.2X1.41X10)	11503617
4.	16.490	**COVER**, READING LAMP LENS (RUBBER)	15581670
	8.991	**BULB**, 6CP-906	9436750
5.	2.490	**BULB**, DOME LAMP NO. 211-2 (8.991)	9431808
6.	16.495	**LENS**, DOME & READING LAMP	15599618
7.	8.977	**SCREW**, PAN HD TORX TAP (M4.2X1.41X40)	11504773
8.	16.494	**SPACER**, DOME LAMP	14057471

RPO DEFINITIONS
A52 - SEAT/FRONT BENCH
TR9 - LAMP GROUP

TZR16-02
062790

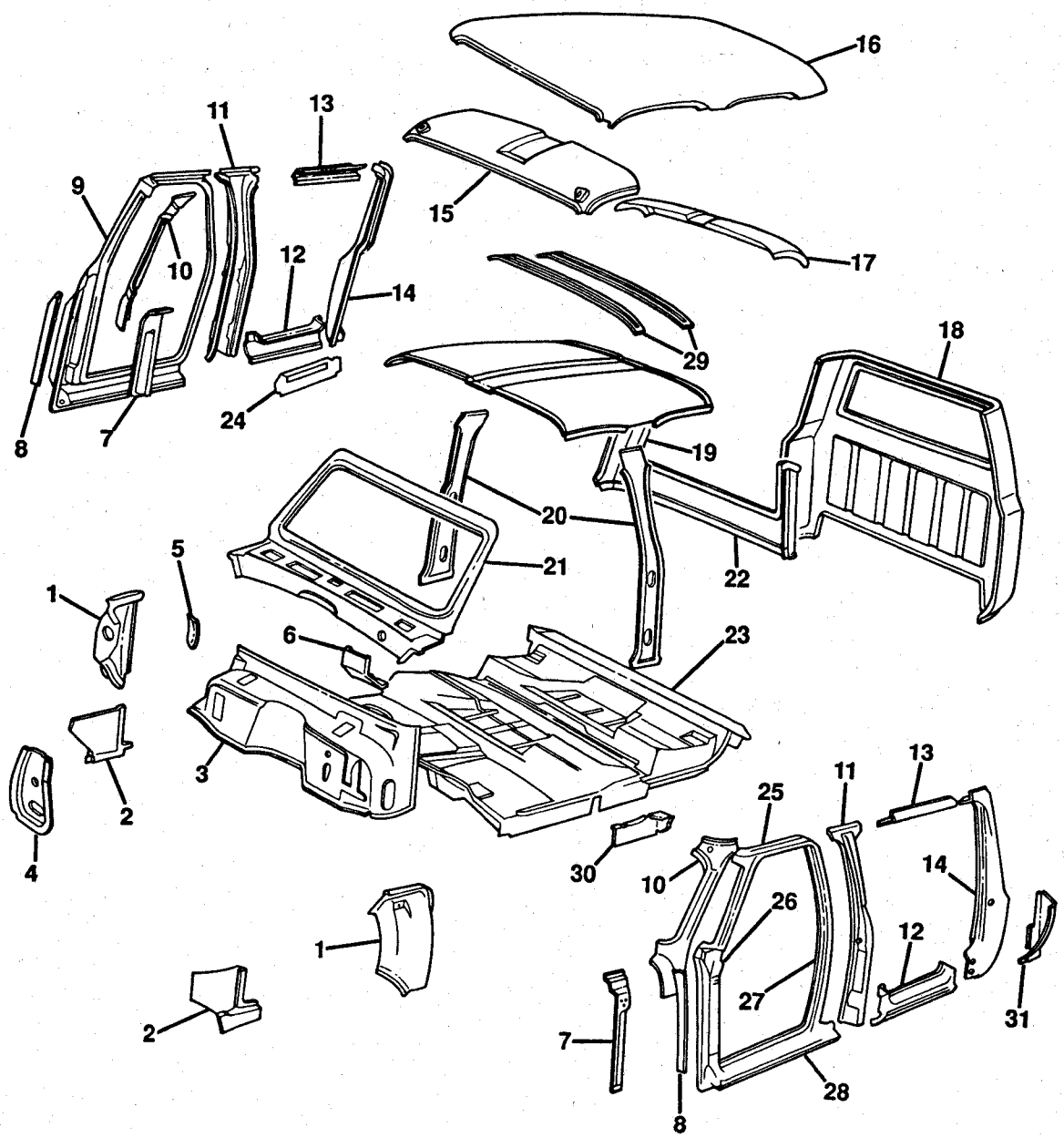

TZR16-02

© 1990 GENERAL MOTORS SERVICE PARTS OPERATIONS—LIGHT TRUCK 52R

1985-1986 CK(43) SHEET METAL/BODY
1987-1991 RV(43) SHEET METAL/BODY

NOTE: QUANTITY IS ONE PER ASSEMBLY UNLESS OTHERWISE SPECIFIED.

1.	16.551	**PANEL**, PLNM SI-LH	14027481
	16.551	**PANEL**, PLNM SI-RH	14027482
2.	16.551	**PANEL**, COWL SI INNER-LH	15606531
	16.551	**PANEL**, COWL SI INNER-RH	15606532
3.	16.550	**PANEL**, DASH & COWL (W/A.C.)	15593843
	16.550	**PANEL**, DASH & COWL (EXC A.C.)	15593569
4.	16.550	**REINFORCEMENT**, DA PNL	15593577
5.	9.264	**DEFLECTOR**, PLENUM WAT-RH (EXC A.C.)	15591096
6.	4.634	**BRACE**, BRK PED BRKT	467282
7.	16.507	**REINFORCEMENT**, F/D FRM HGE-LH	377785
	16.507	**REINFORCEMENT**, F/D FRM HGE-RH	377786
8.	16.507	**EXTENSION**, F/D OPG FRM (2 REQD)	6262042
9.	16.150	**FRAME**, FRT S/D OPG-LH(*1)	15619934
	16.150	**FRAME**, FRT S/D OPG-RH(*1)	15615252
10.	16.585	**PANEL**, F/D OPG FRM TR-LH	15606387
	16.585	**PANEL**, F/D OPG FRM TR-RH	14022848
11.	16.507	**PILLAR**, W/REINF, SI R/D HGE-LH	15579894
	16.507	**PILLAR**, W/REINF, SI R/D HGE-RH	15579895
12.	16.603	**PANEL**, RKR RR OTR-LH	15571673
	16.603	**PANEL**, RKR RR OTR-RH	15571674
13.	16.585	**PANEL**, RR S/D HDR-LH	15606437
	16.585	**PANEL**, RR S/D HDR-RH	15606438
14.	16.585	**PILLAR**, RR S/D LK-LH	15606607
	16.585	**PILLAR**, RR S/D LK-RH	15606608
15.	16.585	**PANEL**, RF FRT INR	6273680
16.	16.585	**PANEL**, RF OTR	6262113
17.	16.585	**PANEL**, RF RR INR	349657
18.	16.587	**PANEL**, BODY RR OTR	14067884
19.	16.585	**PANEL**, RF INTER INR	349654
20.	16.520	**PANEL**, RR S/D H/PLR INR-LH	371397
	16.520	**PANEL**, RR S/D H/PLR INR-RH	364252
21.	16.550	**PANEL**, W/S FRM & PLNM	15629646
22.	16.592	**PANEL**, BODY RR INR	467289
23.	16.545	**PANEL**, FLR & TOE COMPLETE (W/A.T.)	14070529
	16.545	**PANEL**, FLR COMPLETE (W/M.T.)	15606501
24.	16.603	**PANEL**, RKR RR INR-LH	6273155
	16.603	**PANEL**, RKR RR INR-RH	6273156
25.	16.150	**FRAME**, F/D UPR-LH (1985-87)(*2)	347113
	16.150	**FRAME**, F/D UPR-RH (1985-87)(*2)	347114
26.	16.507	**PILLAR**, F/D FRM HGE-LH (1985-87)(*2)	347111
	16.507	**PILLAR**, F/D FRM HGE-RH (1985-87)(*2)	347112
27.	16.507	**PILLAR**, F/D FRM LK-LH (1985-87)(*2)	347115
	16.507	**PILLAR**, F/D FRM LK-RH (1985-87)(*2)	347116
28.	16.603	**PANEL**, RKR-LH (1985-87)(*2)	14095607
	16.603	**PANEL**, RKR-RH (1985-87)(*2)	14095608
29.	16.585	**BOW**, RF PNL (2 REQD)	349355
30.	16.545	**REINFORCEMENT**, FLR PNL EXT-LH	6273587
	16.545	**REINFORCEMENT**, FLR PNL EXT-RH	6273588
31.	16.600	**PANEL**, FRT S/D OPG FRM FIL-LH	15596901
	16.600	**PANEL**, FRT S/D OPG FRM FIL-RH	15646966
32.	8.015	**DEFLECTOR**, PLNM S/PNL WAT-LH	14043793
	8.015	**DEFLECTOR**, PLNM SI PNL AIR OTLT WAT-RH	14043794
33.	9.264	**DEFLECTOR**, PLNM S/PNL WAT-LH (EXC A.C.)	15591095
34.	16.714	**PLUG**, ST BELT UPR BELT HOLE (EXC AS3)	326158
35.	16.714	**PLATE**, ST BELT UPR ANC (2 REQD)	362435
36.	16.714	**PLATE**, ST BELT UPR ANC (W/AK9)(2 REQD)	365995

NOTE 1: INCLUDES ITEMS 25,26,27 & 28.
NOTE 2: ALSO PART OF ITEM #9.FRAME ASSEMBLY IS NOT SERVICED SEPARATLY AFTER 1987

RPO DEFINITIONS
AK9- RESTRAINT SYS/REAR SEAT SHOULDER RETR, 3 POINT.
AS3-SEAT/REAR SUBURBAN.

© 1990 GENERAL MOTORS SERVICE PARTS OPERATIONS—LIGHT TRUCK 52R

TZR16-03
062790

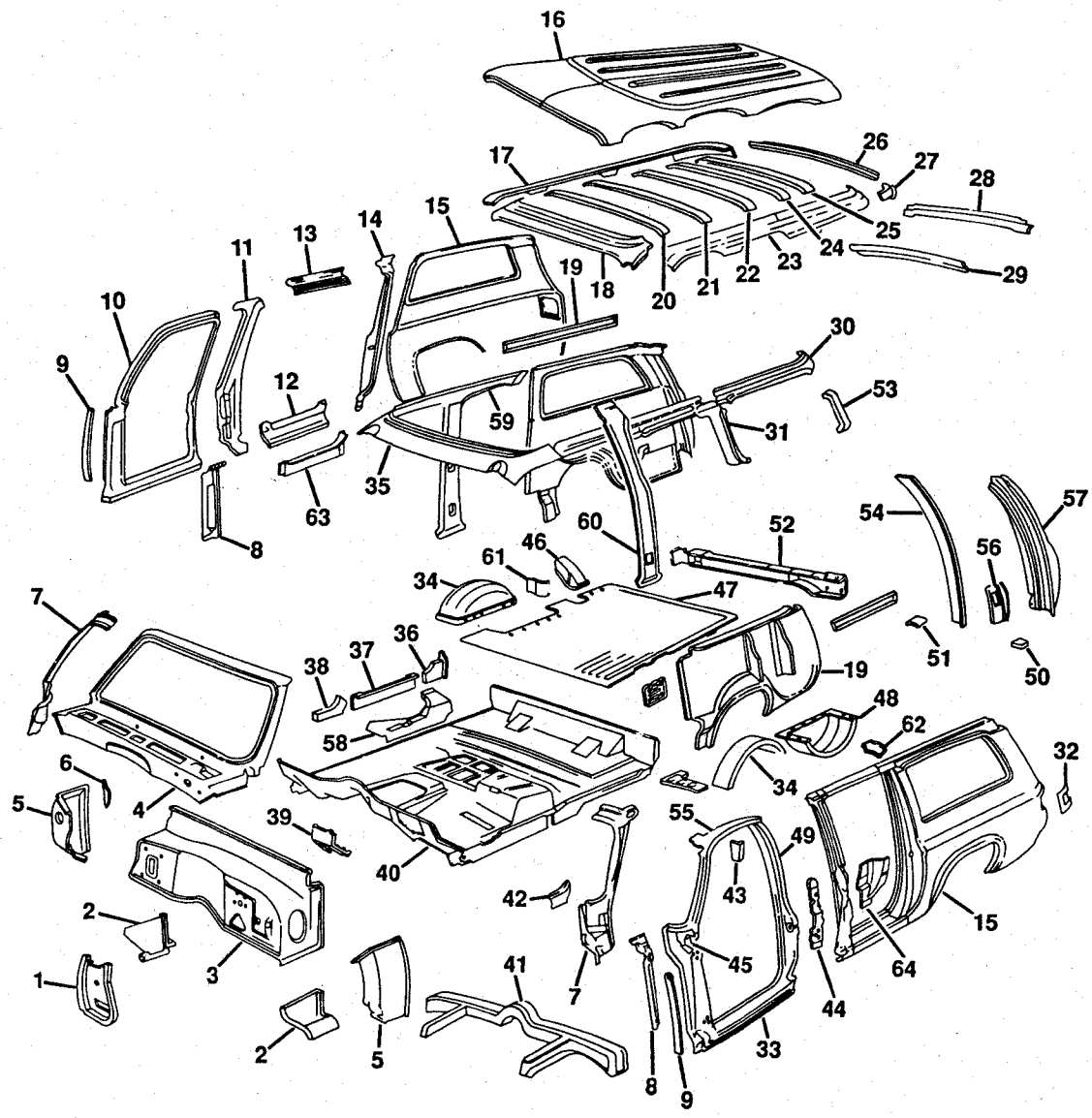

TZR16-03

© 1990 GENERAL MOTORS SERVICE PARTS OPERATIONS—LIGHT TRUCK 52R

1985-1986 CK(06) SHEET METAL/BODY
1987-1991 RV(06) SHEET METAL/BODY

NOTE: QUANTITY IS ONE PER ASSEMBLY UNLESS OTHERWISE SPECIFIED.

1.	16.550	**REINFORCEMENT**, DA PNL	15593577
2.	16.551	**PANEL**, COWL SI INR-LH	15606531
	16.551	**PANEL**, COWL SI INR-RH	15606532
3.	16.550	**PANEL**, DASH & COWL (W/A.C.)	15593843
	16.550	**PANEL**, DASH & COWL (EXC A.C.)	15593569
4.	16.550	**PANEL**, W/S FRM & PLNM	15629646
5.	16.551	**PANEL**, PLNM SI-LH	14027481
	16.551	**PANEL**, PLNM SI-RH	14027482
6.	N.S.	**DEFLECTOR** (PART OF #5)	
7.	16.585	**PANEL**, FRT S/D OPG FRM-LH	15606387
	16.585	**PANEL**, FRT S/D OPG FRM-RH	14022848
8.	16.507	**REINFORCEMENT**, FRT S/D OPG FRM HGE-LH	377785
	16.507	**REINFORCEMENT**, FRT S/D OPG FRM HGE-RH	377786
9.	16.507	**EXTENSION**, SI F/D OPG FRM (2 REQD)	6262042
10.	16.150	**FRAME**, FRT S/D OPG-LH(*1)	15619934
	16.150	**FRAME**, FRT S/D OPG-RH(*1)	15615252
11.	16.507	**PILLAR**, W/REINF, SI R/D HGE-LH	15579894
	16.507	**PILLAR**, W/REINF, SI R/D HGE-RH	15579895
12.	16.603	**PANEL**, RKR RR OTR-LH	15571673
	16.603	**PANEL**, RKR RR OTR-RH	15571674
13.	16.585	**PANEL**, RR S/D HDR-LH	15606437
	16.585	**PANEL**, RR S/D HDR-RH	15606438
14.	16.507	**PILLAR**, W/REINF, SI R/D LK-LH (1985-87)	14038091
	N.S.	**PILLAR**, SI R/D LK-LH (1988-89)(PART OF #19)	
	16.507	**PILLAR**, W/REINF, SI R/D LK-RH (1985-87)	14038092
	N.S.	**PILLAR**, SI R/D LK-RH (1988-89)(PART OF #19)	
15.	16.570	**PANEL**, BODY SI OTR-LH	15571669
	16.570	**PANEL**, BODY SI OTR-RH	15571670
16.	16.585	**PANEL**, ROOF	15624245
17.	N.S.	**RAIL**, SI RF (PART OF #16)	
18.	N.S.	**REINFORCEMENT**, RF FRT (PART OF #16)	
19.	16.570	**PANEL**, BODY SI INNER COMPL-LH (EXC E55)	15616756
	16.570	**PANEL**, BODY SI INTER COMPL-RH (W/ZW9)	15579893
	16.570	**PANEL**, BODY SI INTER COMPL-LH (W/E55)	15579890
	16.570	**PANEL**, BODY SI INNER-RH (W/E55)	15634240
20.	N.S.	**BOW** (PART OF #16)	
21.	N.S.	**BOW** (PART OF #16)	
22.	N.S.	**BOW** (PART OF #16)	
23.	N.S.	**REINFORCEMENT** (PART OF #16)	
24.	N.S.	**BOW** (PART OF #16)	
25.	N.S.	**BOW** (PART OF #16)	
26.	N.S.	**PANEL** (PART OF #16)	
27.	N.S.	**REINFORCEMENT** (PART OF #15)	
28.	16.585	**PANEL**, RF RR HDR W/REINFORCEMENT	15617847
29.	N.S.	**REINFORCEMENT** (PART OF #28)	
30.	N.S.	**PANEL** (PART OF #15)	
31.	16.570	**PANEL**, BODY SI WDO FRT-LH	14043839
	16.570	**PANEL**, BODY SI WDO FRT-RH	14043840
32.	2.660	**RETAINER**, T/LP-LH	466715
	2.660	**RETAINER**, T/LP-RH	466716
33.	16.603	**PANEL**, RKR-LH (1985-87)(*2)	14095607
	16.603	**PANEL**, RKR-RH (1985-87)(*2)	14095608
34.	16.570	**PANEL**, RR W/H INR-LH	470943
	16.570	**PANEL**, RR W/H INR-RH	470946
35.	16.585	**PANEL**, RF FRT HDR	6274821
36.	N.S.	**REINFORCEMENT** (PART OF #10)	
37.	N.S.	**PANEL** (PART OF #10)	
38.	N.S.	**REINFORCEMENT** (PART OF #10)	
39.	4.634	**BRACE**, BRK PED BRKT	467282
40.	16.545	**PANEL**, FLR COLUMN SHIFT COMPL (C/R)	15606588
	16.545	**PANEL**, FLR FLOOR SHIFT COMPL (K/V)	15606590
41.	N.S.	**SILL** (PART OF #40)	
42.	N.S.	**REINFORCEMENT** (PART OF #10)	
43.	N.S.	**REINFORCEMENT** (PART OF #10)	
44.	N.S.	**REINFORCEMENT** (PART OF #11)	
45.	16.507	**PILLAR**, F/D FRM HGE-LH (1985-87)(*2)	347111
	16.507	**PILLAR**, F/D FRM HGE-RH (1985-87)(*2)	347112
46.	3.008	**PANEL**, F/TK FIL PIPE HSG	14073911
47.	17.400	**PANEL**, RR FLR	15606596
48.	16.565	**WELL**, SPARE WHEEL	15596982

© 1990 GENERAL MOTORS SERVICE PARTS OPERATIONS—LIGHT TRUCK 52R

49.	16.507	**PILLAR**, F/D FRM LK-LH (1985-87)(*2)	347115
	16.507	**PILLAR**, F/D FRM LK-RH (1985-87)(*2)	347116
50.	N.S.	**REINFORCEMENT** (PART OF #47)	
51.	N.S.	**REINFORCEMENT** (PART OF #47)	
52.	16.545	**SILL**, FLR PNL RR CR (W/ZW9)	15606605
	16.565	**SILL**, FLR PNL RR CR (W/E55)	15606585
53.	N.S.	**PANEL** (PART OF #15)	
54.	N.S.	**PANEL** (PART OF #15)	
55.	16.150	**FRAME**, F/D UPR-LH (1985-87)(*2)	347113
	16.150	**FRAME**, F/D UPR-RH (1985-87)(*2)	347114
56.	N.S.	**REINFORCEMENT** (PART OF #15)	
57.	N.S.	**PILLAR** (PART OF #19)	
58.	16.545	**REINFORCEMENT**, FLR PNL EXT-LH	6273587
	16.545	**REINFORCEMENT**, FLR PNL EXT-RH	6273588
59.	16.585	**PANEL**, RF SI HDR-LH	15606371
	16.585	**PANEL**, RF SI HDR-RH	15606484
60.	16.520	**PANEL**, RR S/D H/PLR INR-LH	371397
	16.520	**PANEL**, RR S/D H/PLR INR-RH	364252
61.	16.570	**PANEL**, RR W/H PNL EXTN-RH	470940
62.	16.545	**COVER**, BODY SI WDO FRT PNL HOLE (EXC YE9)(2 REQD)	334133
63.	16.603	**PANEL**, RKR RR INR-LH	6273155
	16.603	**PANEL**, RKR RR INR-RH	6273156
64.	16.570	**REINFORCEMENT**, R/D H/PLR (W/E55)(2 REQD)	15606550
65.	16.714	**PLUG**, ST BELT UPR BOLT HOLE (AS REQD)	326158
66.	16.714	**PLATE**, ST BELT UPR ANC (2 REQD)	362435
67.	16.570	**COVER**, BODY SI INR PNL HOLE-LH	359267
68.	16.570	**COVER**, BODY SI INR PNL HOLE-RH	359268
69.	16.715	**PLATE**, I/SEAT BK LAT ANC (2 REQD)	15606620
70.	8.015	**DEFLECTOR**, PLNM SI PNL WAT-LH	14043793
	8.015	**DEFLECTOR**, PLNM SI PNL WAT-RH	14043794
71.	9.264	**DEFLECTOR**, PLENUM S/PNL WAT-LH (EXC A.C.)	15591095
	9.264	**DEFLECTOR**, PLENUM S/PNL WAT-RH (EXC A.C.)	15591096

NOTE 1: INCLUDES ITEMS 33,45,49,55.
NOTE 2: ALSO PART OF ASM, ITEM #10.

RPO DEFINITIONS
AK9-RESTRAINT SYS/REAR SEAT SHLDR RETR,3 POINT.
E55-END GATE/SUBURBAN.
YE9-EQUIPMENT PACKAGE/COMFORT, CONVENIENCE & DECOR.
ZW9-BASE BODY OR CHASSIS.

© 1990 GENERAL MOTORS SERVICE PARTS OPERATIONS—LIGHT TRUCK 52R

NOTES

BLANK PAGE

TZR16-09
071190

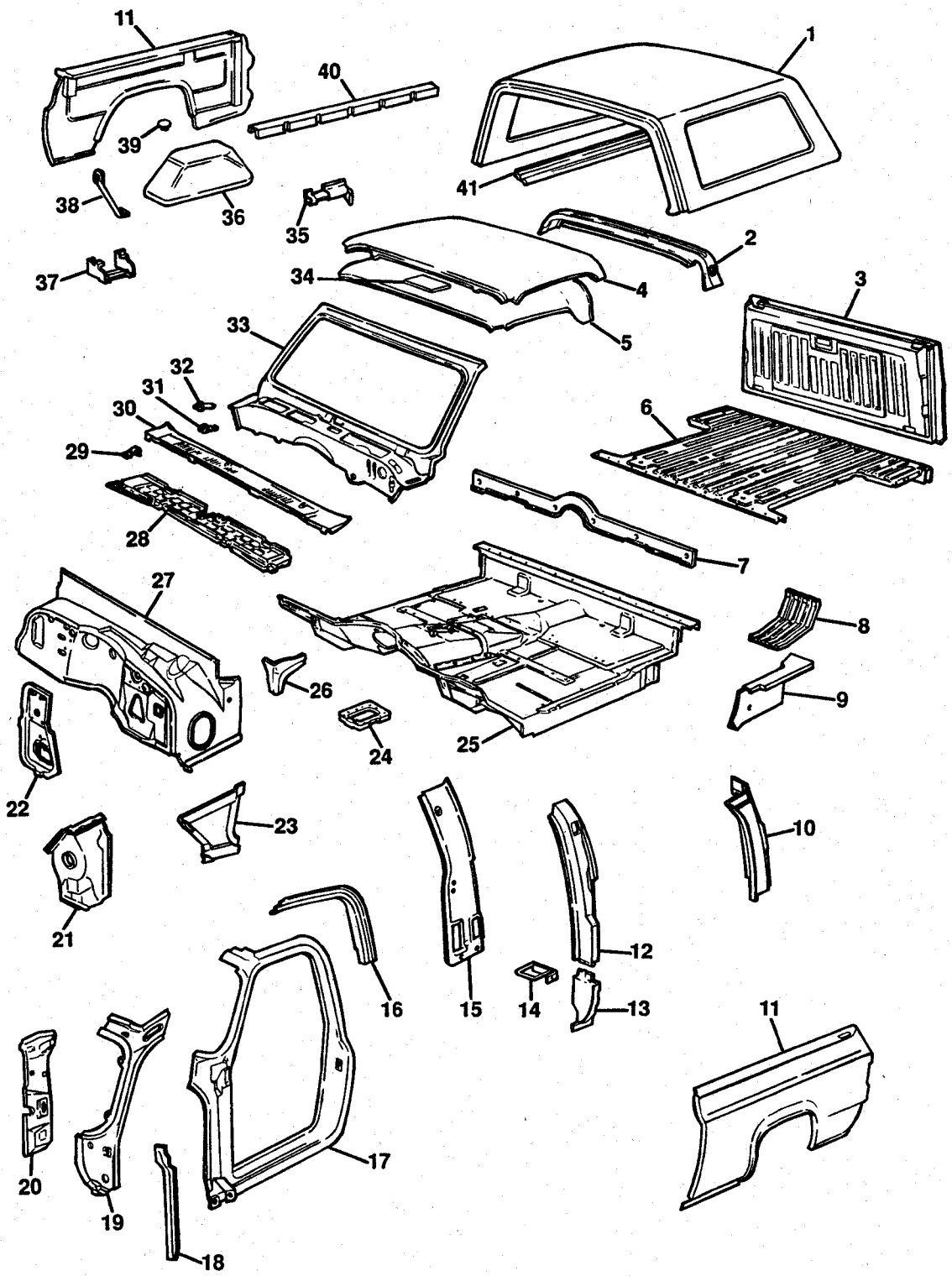

TZR16-09

© 1990 GENERAL MOTORS SERVICE PARTS OPERATIONS—LIGHT TRUCK 52R

1985-1986 K(16) SHEET METAL/BODY
1987-1991 V(16) SHEET METAL/BODY

1.	16.585	**TOP** ,REMOVABLE((WHITE)(PAINT TO MATCH))	15565342
2.	16.585	**REINFORCEMENT** , RF PNL	358543
3.	17.185	**GATE** , END (WLDG ASM ONLY)	15571691
4.	16.585	**PANEL** , RF OTR	355616
5.	16.585	**PANEL** , RF INR	15610112
6.	17.400	**PLATFORM**	15571692
7.	16.800K	**PLATE** ,FLR PNL TRIM(PAINT AS REQD)	474022
8.	3.602	**SHIELD** , MUFF HEAT REFLECTOR	471089
9.	16.545	**EXTENSION** , FLR & TOE PNL RR-LH	466743
	16.545	**EXTENSION** , FLR & TOE PNL RR-RH	466744
10.	16.570	**EXTENSION** , BODY SI OTR PNL-LH	355617
	16.570	**EXTENSION** , BODY SI OTR PNL-RH	355618
11.	17.505	**SIDE ASM** , BODY (COMPL)-LH	15606319
	17.505	**SIDE ASM** , BODY (COMPL)-RH	15606320
12.	16.520	**REINFORCEMENT** , BODY LK PLR-LH	466723
	16.520	**REINFORCEMENT** , BODY LK PLR-RH	466724
13.	16.507	**EXTENSION** , F/D LK PLR REINF-LH	466751
	16.507	**EXTENSION** , F/D LK PLR REINF-RH	466752
14.	16.600	**FILLER** , F/D OPG FRM-LH	473873
	16.600	**FILLER** , F/D OPG FRM-RH	473874
15.	16.520	**PANEL** , BODY LK PLR TR-LH	15602381
	16.520	**PANEL** , BODY LK PLR TR-RH	466720
16.	16.642	**MOLDING** , RF DRIP-LH	355679
	16.642	**MOLDING** , RF DRIP-RH	355680
17.	16.150	**FRAME** , FRT S/D OPG-LH	15615253
	16.150	**FRAME** , FRT S/D OPG-RH	14039174
18.	16.507	**EXTENSION** , F/D OPG FRM	6262042
19.	16.585	**PANEL** , F/D OPG FRM TR-LH	15606387
	16.585	**PANEL** , F/D OPG FRM TR-RH	14022848
20.	16.507	**REINFORCEMENT** , SI F/D OPG FRM HGE-LH	377785
	16.507	**REINFORCEMENT** , SI F/D OPG FRM HGE-RH	377786
21.	16.551	**PANEL** , PLNM SI-LH	14027481
	16.551	**PANEL** , PLNM SI-RH	14027482
22.	16.550	**REINFORCEMENT** , DA PNL	15593577
23.	16.551	**PANEL** , COWL SI INR-LH	15606531
	16.551	**PANEL** , COWL SI INR-RH	15606532
24.	16.545	**REINFORCEMENT** , FLR PNL TRFR CASE OPG	14070536
25.	16.545	**PANEL** , FLR & TOE (COMPL)	15606527
26.	9.264	**DEFLECTOR** , PLENUM WAT-LH (EXC A/C)	15591095
	9.264	**DEFLECTOR** , PLENUM WAT-RH (EXC A/C)	15591096
27.	16.550	**PANEL** , DASH & COWL (EXC A.C.)	15593569
	16.550	**PANEL** , DASH & COWL (W/A.C.)	15593843
28.	16.125	**SCREEN** , W/S FRM & PLENUM PNL	15598709
29.	16.125	**RETAINER** , AIR INL SCREEN	14027555
30.	16.125	**PANEL** , AIR INL GRL	15598708
31.	16.125	**RETAINER** , COWL TO VENT GRL	15598769
32.	16.125	**RETAINER** , COWL TO VENT GRL (OUTER)	15598770
33.	16.550	**PANEL** , W/S FRM & PLNM	15629646
34.	16.742	**INSULATOR** , RF PNL	14032744
35.	17.505	**SHIELD** , BODY SI PNL-LH	467911
	17.505	**SHIELD** , BODY SI PNL-RH	467912
36.	17.505	**PANEL** , W/H-LH	14027451
	17.505	**PANEL** , W/H-RH	15602384
37.	16.585	**REINFORCEMENT** , RF FRT INR PNL (1987-91)	15629659
38.	17.505	**BRACE** , SI OTR PNL	330438
39.	8.973	**PLUG** , 1.00 DIA HOLE W/WASHER(12.981)	14049810
40.	17.505	**SIDE ASM** , BODY (COMPL)(LH)	15606319
	17.505	**SIDE ASM** , BODY (COMPL)(RH)	15606320
41.	16.742	**MOLDING** , RF SI LWR-LH	358535
	16.742	**MOLDING** , RF SI LWR-RH	358536

© 1990 GENERAL MOTORS SERVICE PARTS OPERATIONS—LIGHT TRUCK 52R

TZR16-08
071390

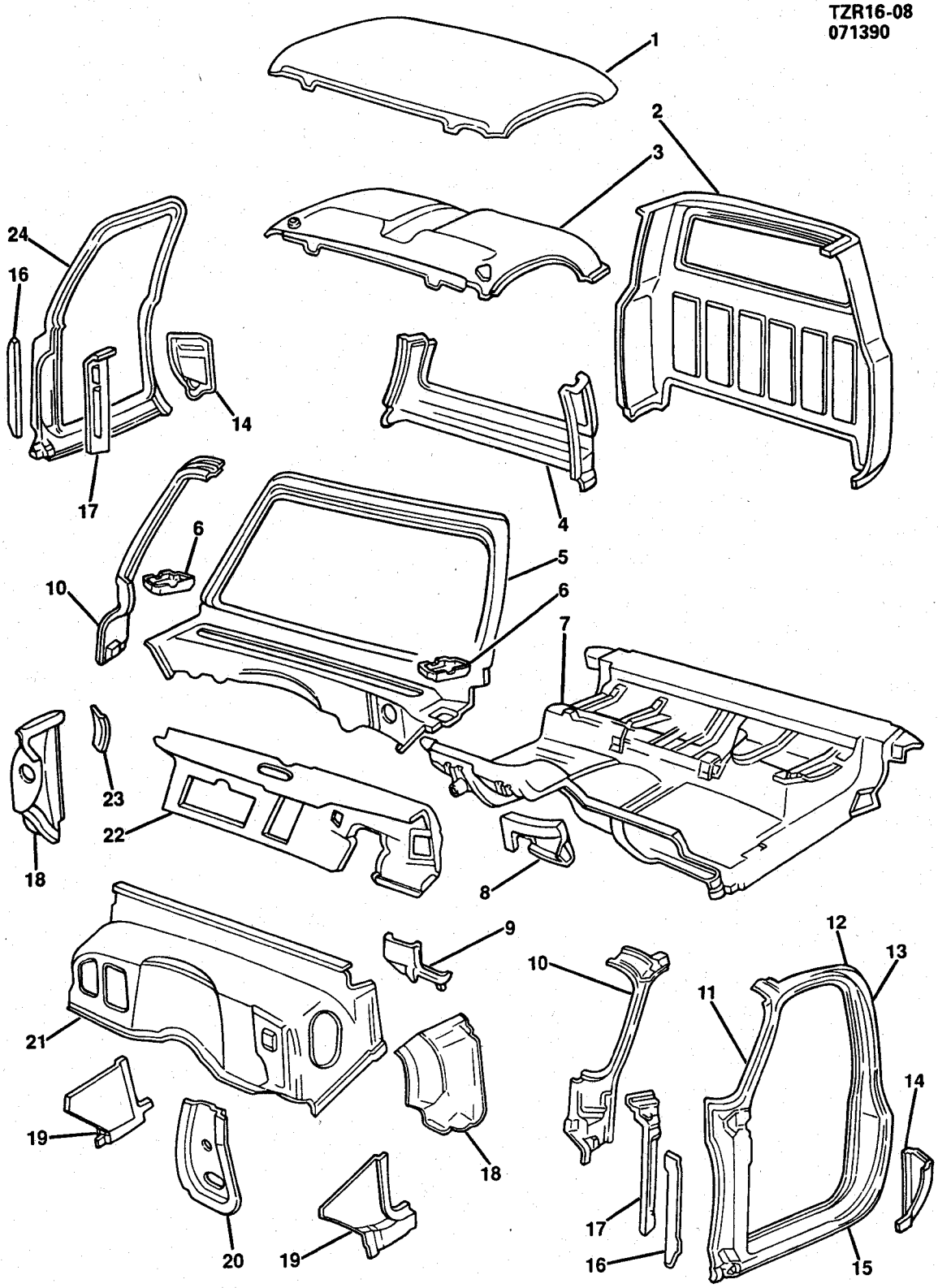

TZR16-08

1985-1986 CK(03) SHEET METAL/BODY SIDE & ROOF
1987-1989 RV(03) SHEET METAL/BODY SIDE & ROOF

1.	16.585	**PANEL**, RF OTR (W/RF MRK LP U01)	685488
	16.585	**PANEL**, RF OTR (EXC RF MRKR LP U01)	3999814
2.	16.587	**PANEL**, BODY RR OTR	14067884
3.	16.585	**PANEL**, RF INR (W/COURTESY LAMP C91)	15591054
	16.585	**PANEL**, RF INR (EXC COURTESY LAMP C91)	3999884
4.	16.592	**PANEL**, BODY RR INR	467289
5.	16.550	**PANEL**, W/S FRM & PLNM	15629646
	8.015	**DEFLECTOR**, PLNM SI PNL AIR OTLT WAT-LH	14043793
	8.015	**DEFLECTOR**, PLNM SI PNL AIR OTLT WAT-RH	14043794
6.	9.264	**DEFLECTOR**, PLNM S/PNL WAT-LH	14043793
	9.264	**DEFLECTOR**, PLNM S/PNL WAT-RH	14043794
7.	16.545	**PANEL**, FLR & TOE COMPLETE (W/COLUMN SHIFT)	14070521
	16.545	**PANEL**, FLR & TOE COMPLETE (W/FLOOR SHIFT)	15531533
8.	16.800	**SHIELD**, FLR & TOE PNL HT	14043813
9.	4.634	**BRACE**, BRK PED BRKT	467282
10.	16.585	**PANEL**, F/D OPG FRM TR-LH	15606387
	16.585	**PANEL**, F/D OPG FRM TR-RH	14022848
11.	16.507	**PILLAR**, F/D FRM HGE-LH(1985-87)(*2)	347111
	16.507	**PILLAR**, F/D FRM HGE-RH(1985-87)(*2)	347112
12.	16.150	**FRAME**, F/D UPR-LH(1985-87)(*2)	347113
	16.150	**FRAME**, F/D UPR-RH(1985-87)(*2)	347114
13.	16.507	**PILLAR**, F/D FRM LK-LH(1985-87)(*2)	347115
	16.507	**PILLAR**, F/D FRM LK-RH(1985-87)(*2)	347116
14.	16.600	**FILLER**, F/D OPG FRM-LH	15596901
	16.150	**PANEL**, SI F/D OPG FRM FILLER-RH (1985-87)	15646966
15.	16.603	**PANEL**, RKR-LH(1985-87)(*2)	14095607
	16.603	**PANEL**, RKR-RH(1985-87)(*2)	14095608
16.	16.507	**EXTENSION**, F/D OPG FRM	6262042
17.	16.507	**REINFORCEMENT**, F/D OPG FRM HGE-LH	377785
	16.507	**REINFORCEMENT**, F/D OPG FRM HGE-RH	377786
18.	16.551	**PANEL**, PLENUM SI-LH	14027481
	16.551	**PANEL**, PLENUM SI-RH	14027482
19.	16.551	**PANEL**, COWL SI INR-LH	15606531
	16.551	**PANEL**, COWL SI INR-RH	15606532
20.	16.550	**REINFORCEMENT**, DA PNL	15593577
21.	16.550	**PANEL**, DASH & COWL (W/A.C.)	15593843
	16.550	**PANEL**, DASH & COWL (EXC A.C.)	15593569
22.	16.080	**PANEL**, INST (1985-88)	15590559
	16.080	**PANEL**, INST (1989)	15610124
23.	9.264	**DEFLECTOR**, PLENUM WAT-LH (EXC A.C.)	15591095
	9.264	**DEFLECTOR**, PLENUM WAT-RH	15591096
24.	16.150	**FRAME**, F/D OPG-LH(*1)	15615253
	16.150	**FRAME**, F/D OPG-RH(*1)	14039174

NOTE 1: INCLUDES ITEMS 20,21,22 &23.
NOTE 2: ALSO PART OF ASM ITEM #7.

© 1990 GENERAL MOTORS SERVICE PARTS OPERATIONS—LIGHT TRUCK 52R

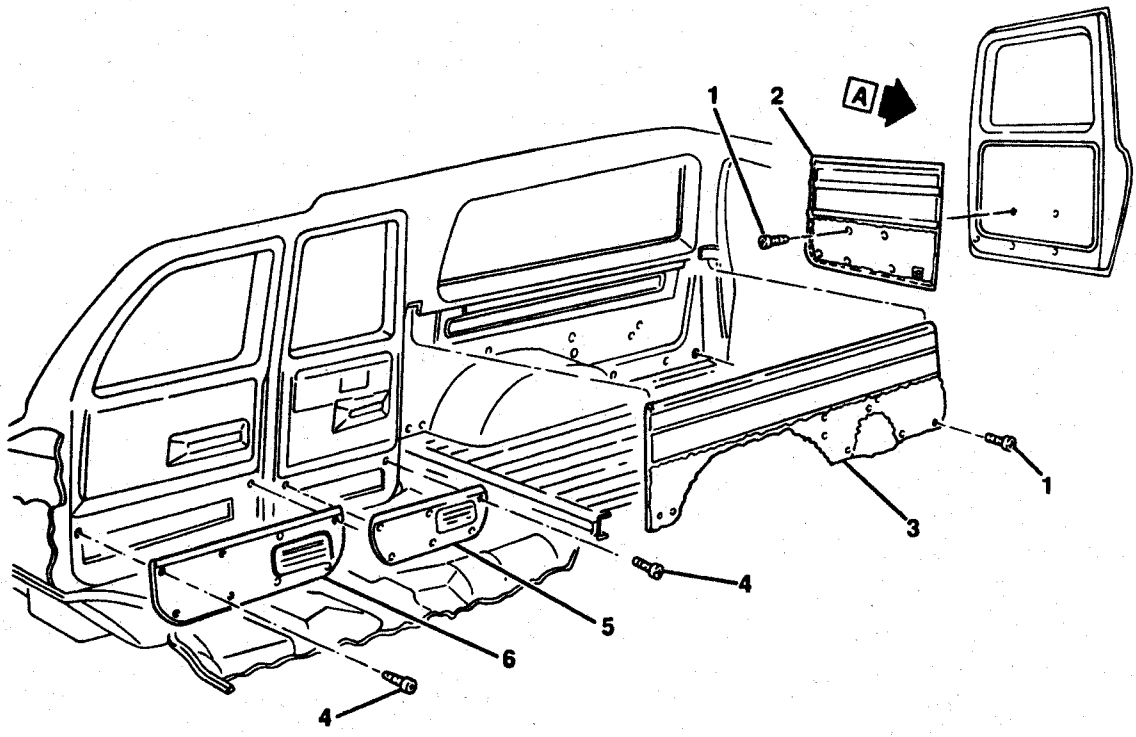

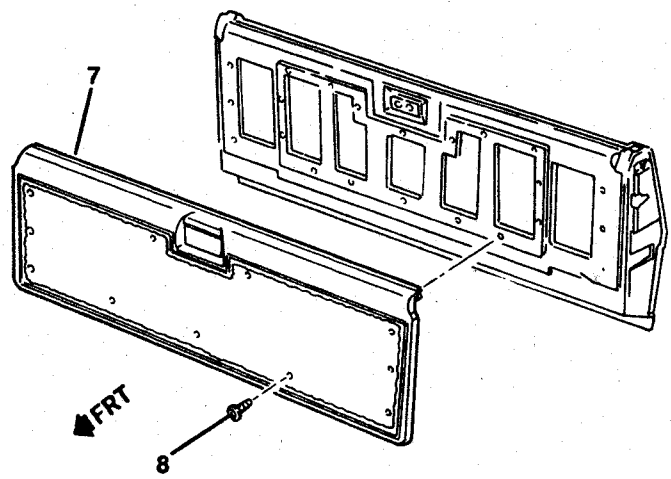

VIEW A
(W/END GATE E55)

TR16-124

© 1990 GENERAL MOTORS SERVICE PARTS OPERATIONS—LIGHT TRUCK 52R

1989-1991 RV(06) TRIM/INTERIOR

1.	8.977	**SCREW**, OVAL CSNK R/REC HD (M4.2-1.41X20)	11503537
2.	16.165	**PANEL**, REAR DOOR TRIM-LH (MAPLE-77I)(1989)	15607913
	16.165	**PANEL**, REAR DOOR TRIM-RH (MAPLE-77I)(1989)	15607914
	16.165	**PANEL**, REAR DOOR TRIM-LH (GRAY-82I)(1989-90)	15607915
	16.165	**PANEL**, REAR DOOR TRIM-RH (GRAY-82I)(1989-90)	15607916
	16.165	**PANEL**, REAR DOOR TRIM-LH (COGNAC-60I)(1989-91)	15607917
	16.165	**PANEL**, REAR DOOR TRIM-RH (COGNAC-60I)(1989-91)	15607918
	16.165	**PANEL**, REAR DOOR TRIM-LH (BLUE-24I)(1989-91)	15602031
	16.165	**PANEL**, REAR DOOR TRIM-RH (BLUE-24I)(1989-91)	15602032
	16.165	**PANEL**, REAR DOOR TRIM-LH (RED-47I)(1990-91)	15641227
	16.165	**PANEL**, REAR DOOR TRIM-RH (RED-47I)(1990-91)	15641228
	16.165	**PANEL**, REAR DOOR TRIM-LH (GRAY-13I)(1991)	15641513
	16.165	**PANEL**, REAR DOOR TRIM-RH (GRAY-13I)(1991)	15641514
3.	16.575	**PANEL**, BODY SIDE TRIM-LH (MAPLE-77I)(1989)	15607733
	16.575	**PANEL**, BODY SIDE TRIM-RH (MAPLE-77I)(1989)	15607734
	16.575	**PANEL**, BODY SIDE TRIM-LH (GRAY-82I)(1989-90)	15607735
	16.575	**PANEL**, BODY SIDE TRIM-RH (GRAY-82I)(1989-90)	15607736
	16.575	**PANEL**, BODY SIDE TRIM-LH (COGNAC-60I)(1989-91)	15607731
	16.575	**PANEL**, BODY SIDE TRIM-RH (COGNAC-60I)(1989-91)	15607732
	16.575	**PANEL**, BODY SIDE TRIM-LH (BLUE-24I)(1989-91)	15601989
	16.575	**PANEL**, BODY SIDE TRIM-RH (BLUE-24I)(1989-91)	15601990
	16.575	**PANEL**, BODY SIDE TRIM-LH (RED-47I)(1990-91)	15624085
	16.575	**PANEL**, BODY SIDE TRIM-RH (RED-47I)(1990-91)	15624086
	16.575	**PANEL**, BODY SIDE TRIM-LH (GRAY-13I)(1991)	15641467
	16.575	**PANEL**, BODY SIDE TRIM-RH (GRAY-13I)(1991)	15641468
4.	8.977	**SCREW**, OVAL HD C/R,C/S TAP (4.2X1.41X13)	11509608
5.	16.165	**CARPET**, SIDE RR DOOR TRIM PANEL-LH (MAPLE-77I)(1989)	15607895
	16.165	**CARPET**, SIDE RR DOOR TRIM PANEL-RH (MAPLE-77I)(1989)	15607896
	16.165	**CARPET**, SIDE RR DOOR TRIM PNL-LH (GRAY-82I)(1989-90)	15607897
	16.165	**CARPET**, SIDE RR DOOR TRIM PNL-RH (GRAY-82I)(1989-90)	15607898
	16.165	**CARPET**, SIDE RR DR TRIM PNL-LH (COGNAC-60I)(1989-91)	15607899
	16.165	**CARPET**, SIDE RR DR TRIM PNL-RH (COGNAC-60I)(1989-91)	15607900
	16.165	**CARPET**, SIDE RR DOOR TRIM PNL-LH (BLUE-24I)(1989-91)	15606657
	16.165	**CARPET**, SIDE RR DOOR TRIM PNL-RH (BLUE-24I)(1989-91)	15606658
	16.165	**CARPET**, SIDE RR DOOR TRIM PNL-LH (RED-47I)(1990-91)	15624127
	16.165	**CARPET**, SIDE RR DOOR TRIM PNL-RH (RED-47I)(1990-91)	15624128
	16.165	**CARPET**, SIDE RR DOOR TRIM PNL-LH (GRAY-13I)(1991)	15641507
	16.165	**CARPET**, SIDE RR DOOR TRIM PNL-RH (GRAY-13I)(1991)	15641508
6.	16.165	**CARPET**, SIDE FRONT DOOR LOWER-LH (MAPLE-77I)(1989)	15629675
	16.165	**CARPET**, SIDE FRONT DOOR LOWER-RH (MAPLE-77I)(1989)	15629676
	16.165	**CARPET**, SIDE FRONT DOOR LOWER-LH (GRAY-82I)(1989-90)	15629677
	16.165	**CARPET**, SIDE FRONT DOOR LOWER-RH (GRAY-82I)(1989-90)	15629678
	16.165	**CARPET**, SIDE FRONT DOOR LWR-LH (COGNAC-60I)(1989-91)	15629679
	16.165	**CARPET**, SIDE FRONT DOOR LWR-RH (COGNAC-60I)(1989-91)	15629680
	16.165	**CARPET**, SIDE FRONT DOOR LOWER-LH (BLUE-24I)(1989-91)	15629681
	16.165	**CARPET**, SIDE FRONT DOOR LOWER-RH (BLUE-24I)(1989-91)	15629682
	16.165	**CARPET**, SIDE FRONT DOOR LOWER-LH (RED-47I)(1990-91)	15624109
	16.165	**CARPET**, SIDE FRONT DOOR LOWER-RH (RED-47I)(1990-91)	15624110
	16.165	**CARPET**, SIDE FRONT DOOR LOWER-LH (GRAY-13I)(1991)	15641491
	16.165	**CARPET**, SIDE FRONT DOOR LOWER-RH (GRAY-13I)(1991)	15641492
7.	17.185	**PANEL**, END GATE TRIM (MAPLE-77I)(W/E55)(1989)	15607919
	17.185	**PANEL**, END GATE TRIM (GRAY-82I)(W/E55)(1989-90)	15607920
	17.185	**PANEL**, END GATE TRIM (COGNAC-60I)(W/E55)(1989-91)	15607921
	17.185	**PANEL**, END GATE TRIM (BLUE-24I)(W/E55)(1989-91)	15602037
	17.185	**PANEL**, END GATE TRIM (RED-47I)(W/E55)(1990-91)	15624139
	17.185	**PANEL**, END GATE TRIM (GRAY-13I)(W/E55)(1991)	15641504
8.	8.977	**SCREW**, (M4.2-1.41X25)	11501167

RPO DEFINITIONS
E55 - END GATE, SURBURBAN

© 1990 GENERAL MOTORS SERVICE PARTS OPERATIONS—LIGHT TRUCK 52R

TZR16-10
071690

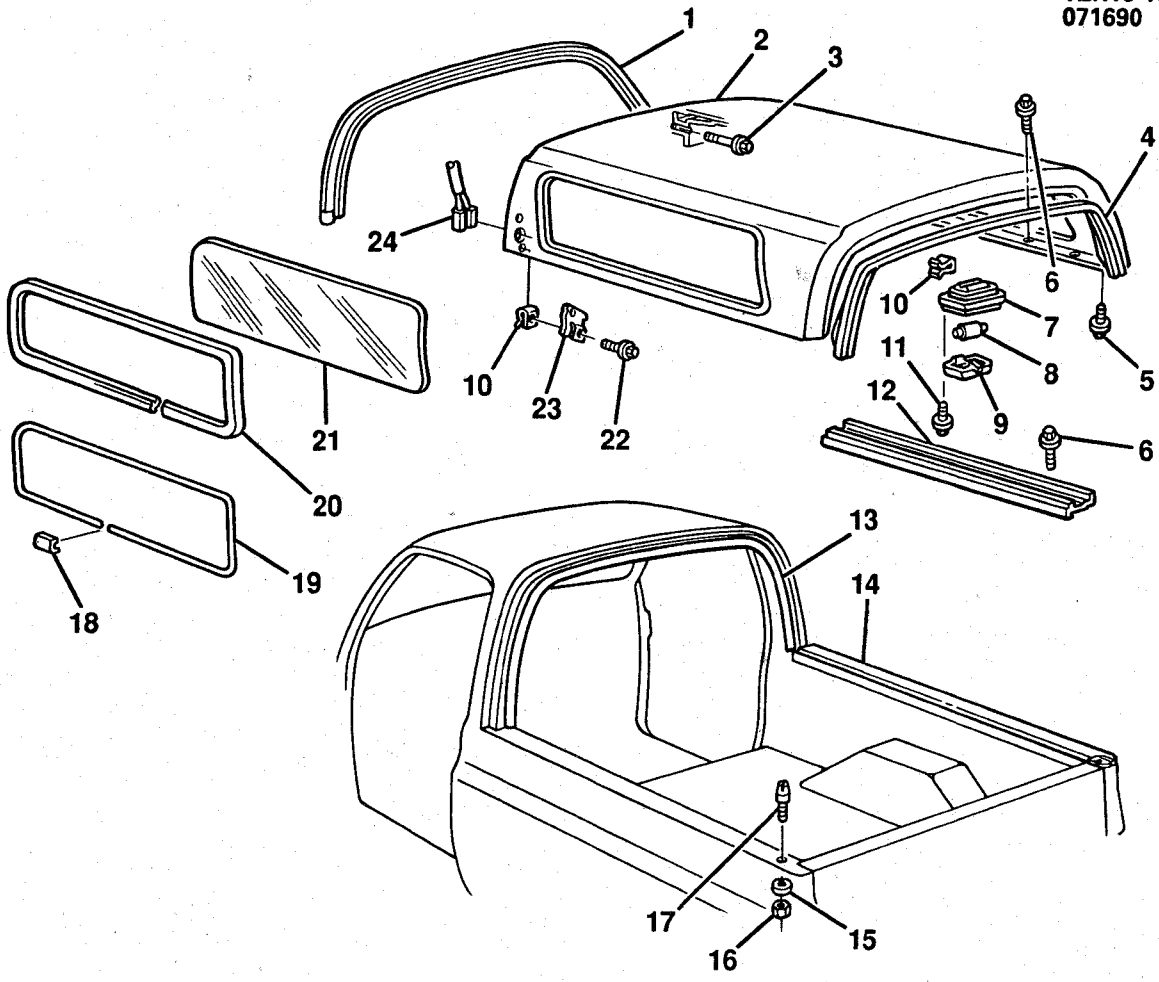

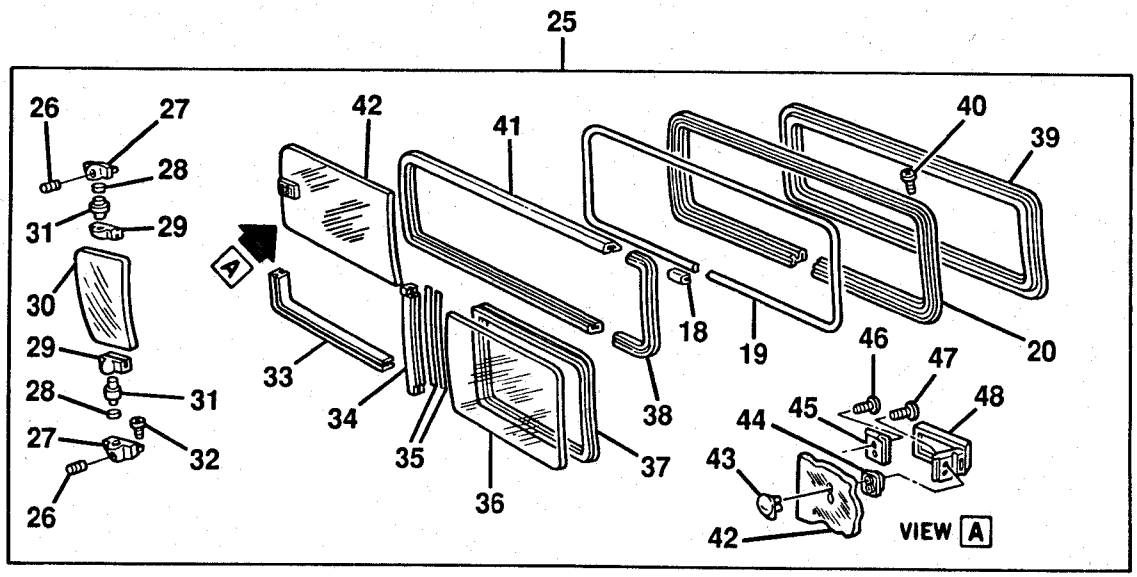

TZR16-10

1985-1986 K(16) TOP/REMOVABLE
1987-1991 V(16) TOP/REMOVABLE

1.	16.585	**WEATHERSTRIP**, REM TOP FRT OTR	15590455
2.	16.585	**TOP**, REMOVABLE (INCL #1,4,7,9,14,24)(PAINT AS REQD)	15565342
3.	16.585	**SCREW**, W/WASHER, REM TOP (1985-88)	358549
	16.585	**SCREW**, REMOVABLE TOP	15609968
4.	17.190	**WEATHERSTRIP**, REM TOP END GATE WDO GLS	358593
5.	8.900	**BOLT**, HEX W/CON WA (3/8-16X1 3/8, 275M)(1985-88)	
	16.585	**SCREW**, REMOVABLE TOP	15609969
6.	16.585	**SCREW**, REMOVABLE TOP (7.629)(1985-88)	327042
	16.585	**SCREW**, REMOVABLE TOP	15609967
7.	16.494	**HOUSING**, DOME LP (11.927)	6270493
8.	8.991	**BULB**, (12CP ID 211-2)	9431808
9.	16.495	**LENS**, DOME LP	336201
10.	8.921	**NUT**, U SHAPE (M4.2X1.41X.065, ZOR)	52351724
11.	8.977	**SCREW**, PAN HD C/REC TAP (M4.2X1.41X25)	11500056
12.	16.742	**MOLDING**, RF SI LWR-LH	358535
	16.742	**MOLDING**, RF SI LWR-RH	358536
13.	16.585	**WEATHERSTRIP**, REM TOP (ON CAB)	357490
14.	16.585	**WEATHERSTRIP**, REM TOP RF SI LWR-LH	358589
	16.585	**WEATHERSTRIP**, REM TOP RF SI LWR-RH	358590
15.	8.931	**WASHER**, SPR LK (5/16, PL)	9439511
16.	8.915	**NUT**, HEX (5/16-18X.25, 286M POR)	9439493
17.	16.585	**GUIDE**, AUX TOP LOC	340034
18.	16.460	**CAP**, SI GLS W/STR MLDG (16.041)(PAINT AS REQD)	12338048
19.	16.460	**MOLDING**, SI GLS W/STR (16.041)(BLACK)(CUT AS REQD)	466157
	16.460	**MOLDING**, SI GLS W/STR (16.041)(BRIGHT)(CUT AS REQD) (1985-87)	464471
20.	16.460	**WEATHERSTRIP**, SI GLS (EXC DEEP TINT STAT GLS)	475968
	16.460	**WEATHERSTRIP**, SI GLS (W/DEEP TINT STAT GLS ONLY)	14031996
21.	16.460	**GLASS**, BODY SI STAT-LH (TINTED)	14027473
	16.460	**GLASS**, BODY SI STAT-RH (TINTED)	14027474
	16.460	**GLASS**, BODY SI STAT-LH (DEEP TINT)	14027475
	16.460	**GLASS**, BODY SI STAT-RH (DEEP TINT)	14027476
22.	8.977	**SCREW**, HWH C/R (M4.3-1.41X20) CB	11503389
23.	16.494	**PLATE**, DOME LP CONN (1985-88)	356252
	16.495	**COVER**, REM TOP DM LP WRG ACC HOLE	15624196
24.	16.495	**WIRE**, RF DOME LP	8913201
25.	16.460	**WINDOW**, SI SLIDING-LH (TINTED)(INCL #26-48)	14027457
	16.460	**WINDOW**, SI SLIDING-RH (TINTED)(INCL #26-48)	14027458
	16.460	**WINDOW**, SI SLIDING-LH (DEEP TINT)(INCL #26-48)	14027459
	16.460	**WINDOW**, SI SLIDING-RH (DEEP TINT)(INCL #26-48)	14027460
26.	N.S.	**SCREW**, SET (#10-32X1/4)	
27.	16.460	**PIVOT**, SI RR VENT (INCL #26,28)	14050603
28.	N.S.	**BUSHING**, PIVOT PIN (PART OF #27)	
29.	N.S.	**BRACKET**, VENT GLS PIVOT (PART OF #32)	
30.	16.460	**WINDOW**, SI VENT-LH (INCL #30,31)(*1)	14095669
	16.460	**WINDOW**, SI VENT-RH (INCL #30,31)(*1)	14095670
31.	N.S.	**PIN**, PIVOT (PART OF #32)	
32.	8.977	**SCREW**, PAN HD C/REC (#6-32X5/16, PHOS)	9420723
33.	16.460	**FILLER**, SI STAT WDO	14027631
34.	16.460	**SASH**, SI STAT WDO-LH	14027623
	16.460	**SASH**, SI STAT WDO-RH	14027624
35.	16.460	**WEATHERSTRIP**, SASH	14027635
36.	16.460	**GLASS**, SIDE STAT WINDOW-LH (TINTED)	14027621
	16.460	**GLASS**, SIDE STAT WINDOW-RH (TINTED)	14027622
	16.460	**GLASS**, STAT SECTION-LH (DEEP TINT)	14095589
	16.460	**GLASS**, STAT SECTION-RH (DEEP TINT)	14095590
37.	16.460	**WEATHERSTRIP**, STAT GLS	14027632
38.	16.460	**STOP**, SI SLDG SEC	14027637
39.	N.S.	**FRAME**, SLDG WDO (PART OF #25)	
40.	N.S.	**SCREW**, PAN HD C/REC (#6-32X1)(PART OF #25)	
41.	16.460	**WEATHERSTRIP**, SIDE SLDG WINDOW (TINTED)(*2)	14027636
42.	16.460	**GLASS**, SIDE SLDG WINDOW-LH (TINTED)	14027625
	16.460	**GLASS**, SIDE SLDG WINDOW-RH (TINTED)	14027626
	16.460	**GLASS**, SLDG SECTION-LH (DEEP TINT)	14095667
	16.460	**GLASS**, SLDG SECTION-RH (DEEP TINT)	14095668
43.	N.S.	**CAP**, SLDG WDO LK (PART OF #47)	
44.	N.S.	**SPACER**, SLDG WDO LK (PART OF #47)	
45.	N.S.	**CATCH**, SLDG WDO LK (PART OF #47)	
46.	N.S.	**RIVET**, SLDG WDO	
47.	N.S.	**SCREW**, FL HD C/SINK C/R (#6-32X5/8)(PART OF #25)	
48.	16.460	**LATCH PKG**, SLDG WDO LK (W/TINT)(INCL #42-47)	14039191
	16.460	**LATCH PKG**, SLDG WDO LK (W/DEEP TINT)(INCL #44-47)	14095594

© 1990 GENERAL MOTORS SERVICE PARTS OPERATIONS—LIGHT TRUCK 52R

NOTE 1: VENT GLASS IS TINTED AND IS USED WITH BOTH TINTED AND DEEP TINTED SLIDING WINDOW ASSEMBLIES.
NOTE 2: WEATHERSTRIP IS PART OF SLIDING WINDOW ASSEMBLIES; ITEM #25,AND IS NOT SERVICED SEPARATE.

© 1990 GENERAL MOTORS SERVICE PARTS OPERATIONS—LIGHT TRUCK 52R

NOTES

BLANK PAGE

© 1990 GENERAL MOTORS SERVICE PARTS OPERATIONS—LIGHT TRUCK 52R

T16-112
)62790

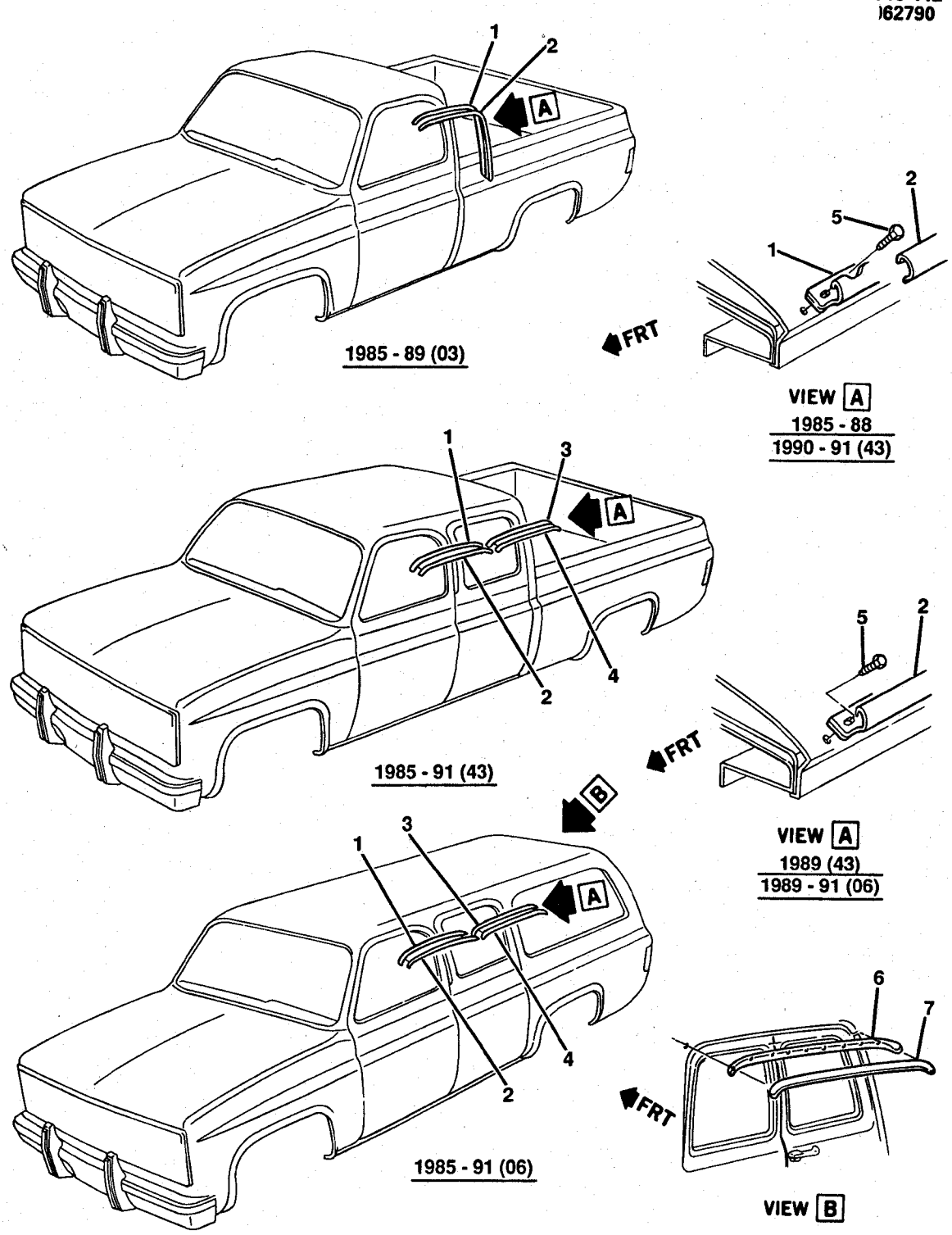

T16-112

1985-1986 CK MOLDINGS/ROOF DRIP
1987-1991 RV MOLDINGS/ROOF DRIP

1.	16.642	**MOLDING ASM**, ROOF DRIP-LH (03)(1985-89)	14028301
	16.642	**MOLDING ASM**, ROOF DRIP-RH (03)(1985-89)	14028302
	16.642	**MOLDING ASM**, RF DRIP FRT-LH (BLACK)(06-43)(1985-89)(43)(1990-91)	342831
	16.642	**MOLDING ASM**, RF DRIP FRT-RH (BLACK)(06-43)(1985-89)(43)(1990-91)	342832
	16.642	**MOLDING**, ROOF SI FRT DRIP-LH (06)(1989-91)	15610367
	16.642	**MOLDING**, ROOF SI FRT DRIP-RH (06)(1989-91)	15610368
2.	16.642	**MOLDING**, ROOF DRIP TRIM-LH (03)(1985-89)	14049975
	16.642	**MOLDING**, ROOF DRIP TRIM-RH (03)(1985-89)	14049976
3.	16.642	**MOLDING ASM**, ROOF DRIP REAR (BLACK)(06-43)(1985-88)(43)(1989-91)	355606
	16.642	**MOLDING**, ROOF SI RR DRIP (06)(1989-91)	15614197
4.	16.642	**MOLDING**, ROOF DRIP TRIM FRT-LH (STAINLESS STL)(06)(1985-86)(43)(1985-91)	14049977
	16.642	**MOLDING**, ROOF DRIP TRIM FRT-RH (STAINLESS STL)(06)(1985-86)(43)(1985-91)	14049978
5.	8.977	**BOLT**, HEX W/FL WA (M6.3X1.81X20)(03-43)(1985-88 06)	12337828
	17.507	**BOLT**, ROOF DRIP MLDG (06)(1989-90)	15614185
6.	16.642	**MOLDING ASM**, ROOF DRIP REAR (06)(1985-88)	461678
	16.642	**MOLDING**, ROOF RR DRIP (06)(1989-91)	15610366
7.	16.642	**MOLDING**, RF DRIP TRIM RR (STAINLESS STL)(06)(1985-88)	14049980

© 1990 GENERAL MOTORS SERVICE PARTS OPERATIONS—LIGHT TRUCK 52R

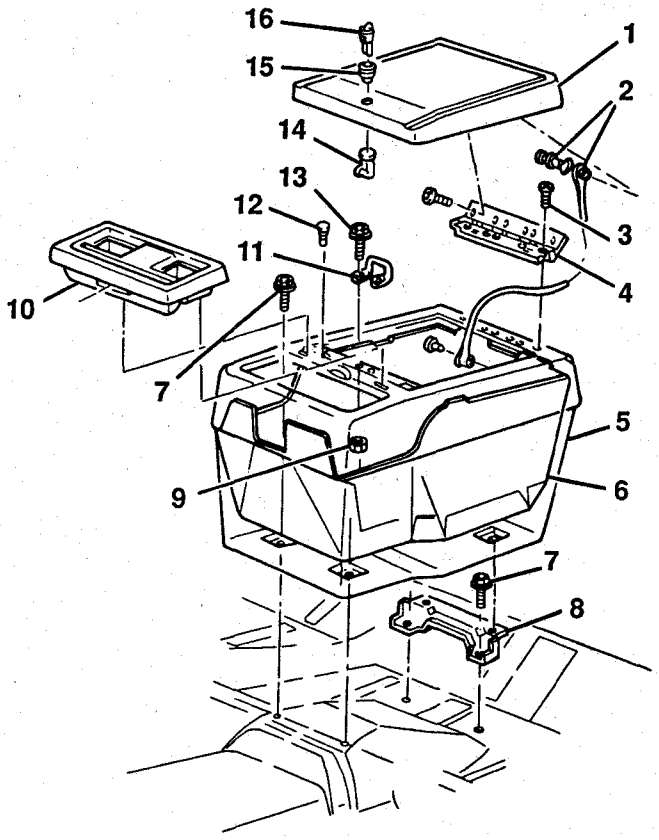

TR16-301
053089

TR16-301

1985-1986 CK COMPARTMENT/SEAT SEPARATOR
1987-1991 RV COMPARTMENT/SEAT SEPARATOR

1.	16.650	**DOOR**, F/FLR COMPT (BLUE-24I)(*1)	15601910
2.	16.650	**STOP**, F/FLR CNSL DR	14031738
3.	8.977	**SCREW**, OV CSK TR HD C/REC TAP (M4.2X1.41X16 PEOR)	11503446
4.	16.650	**HINGE**, F/FLR COMPT DR	14028624
5.	16.650	**COMPARTMENT**, F/FLR (BLUE-24I)(*1)	15601906
6.	16.650	**LINER**, F/FLR COMPT (1989-91)	15624202
7.	8.977	**SCREW**, HWH TAP W/FL WA (M6.3X1.81X25 PO)	11505023
8.	16.650	**SUPPORT**, F/FLR COMPT DR	14028623
9.	8.915	**NUT**, HEX (8-32Z 284M)	120622
	8.931	**LOCK WASHER**, #8 MED	121841
10.	16.650	**TRAY**, F/FLR COMPT (PAINT AS REQUIRED)	14064906
11.	16.650	**STRIKER**, F/FLR COMPT DR	14028625
12.	16.650	**BUMPER**, FRT FLOOR COMPT DR	14005567
13.	N.S.	**SCREW**, CON WA REG LRG (8X32X.625)	
14.	16.650	**CASE**, F/FLR COMPT DR LK	14028620
15.	16.650	**BEZEL**, F/FLR COMPT DR LK	14028618
16.	16.110	**CYLINDER**, F/FLR COMPT DR LK	9632746

NOTE 1: FOR ADDITIONAL PARTS NUMBERS & COLORS REFER TO CATALOG.

© 1990 GENERAL MOTORS SERVICE PARTS OPERATIONS—LIGHT TRUCK 52R

NOTES

BLANK PAGE

© 1990 GENERAL MOTORS SERVICE PARTS OPERATIONS—LIGHT TRUCK 52R

TR16-113
050190

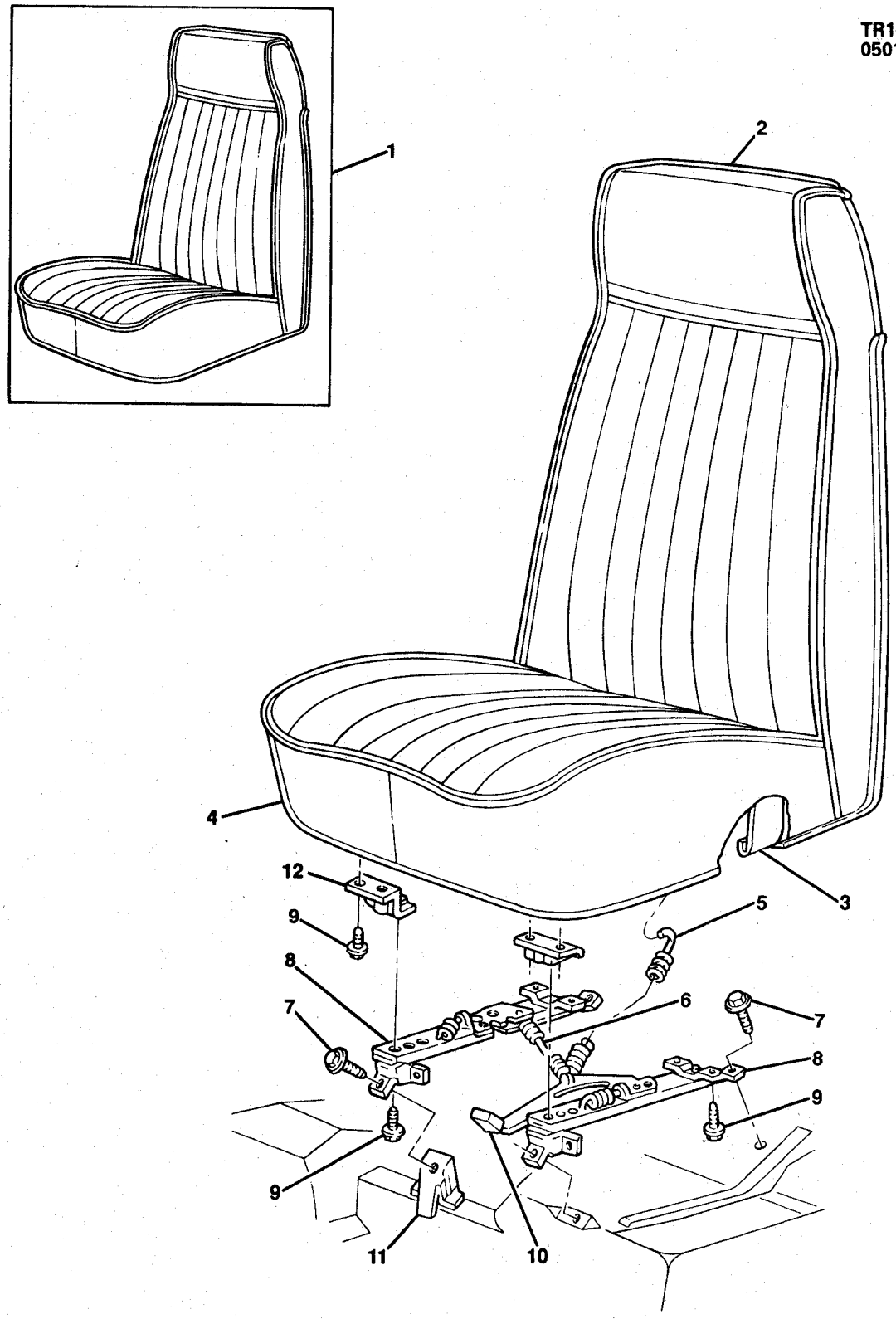

TR16-113

© 1990 GENERAL MOTORS SERVICE PARTS OPERATIONS—LIGHT TRUCK 52R

1988-1991 RV SEAT ASM/FRONT BUCKET (W/6K6,6K8)

NOTE: QUANTITY IS ONE PER ASSEMBLY UNLESS OTHERWISE SPECIFIED.

1.	16.670	**SEAT**, DR & PASS (1988-91 COGNAC)(RV 03-06)(*1)	15568982
	16.670	**SEAT**, DR & PASS (1989-91 BLUE)(RV 06-43)(*1)	15602094
2.	16.724	**TRIM**, DR & PASS SEAT BACK CUSHION (1988-91 COGNAC)(RV 03-06)	15568990
	16.724	**TRIM**, DR & PASS SEAT BACK CUSHION (1989-91 BLUE)(RV 06-43)	15615699
	16.720	**RING**, CUSHION TRIM RETAINER (AS REQD)	4876466
3.	16.679	**FRAME**, W/SPRING & PAD (2 REQD)	14067457
4.	16.717	**TRIM**, DR & PASS SEAT CUSHION(1988-91 COGNAC)(RV 03-06)	15568989
	16.717	**TRIM**, DR & PASS SEAT CUSHION (1989-91 BLUE)(RV 06-43)	15615698
	16.720	**RING**, CUSHION TRIM RETAINER (AS REQD)	4876466
5.	16.682	**SPRING**, SEAT ADJUSTER RETURN	9728051
6.	16.682	**WIRE**, SEAT ADJUSTER LOCK (AS REQD)	14025679
7.	8.977	**SCREW**, HEX HD TAP (3/8X16X1.1, 6010M)(AS REQD)	9431970
8.	16.682	**ADJUSTER**, SEAT OTR-LH	14023897
	16.682	**ADJUSTER**, SEAT INR-RH	14023898
9.	8.900	**BOLT**, HEX LG FL WA (5/16X18X.88, POR 275M)(AS REQD)	2014469
10.	16.682	**KNOB**, SEAT ADJUSTER LOCK LEVER	465536
11.	16.682	**BRACKET**, SEAT ADJUSTER (2 REQD)	14025677
12.	16.686	**BRACKET**, SEAT ADJUSTER-LH	14025673
	16.686	**BRACKET**, SEAT ADJUSTER-RH	14025674

NOTE 1: COMPLETE SEAT ASSEMBLIES ARE CATALOGED AND MADE AVAILABLE ONLY DURING THE CURRENT MODEL YEAR ON A DIRECT SHIP BASIS FROM SOURCE.

RPO DEFINITIONS
6K6 - BUCKET SEAT, DRIVER
6K8 - BUCKET SEAT, DRIVER & PASSENGER

© 1990 GENERAL MOTORS SERVICE PARTS OPERATIONS—LIGHT TRUCK 52R

TA16-016
071290

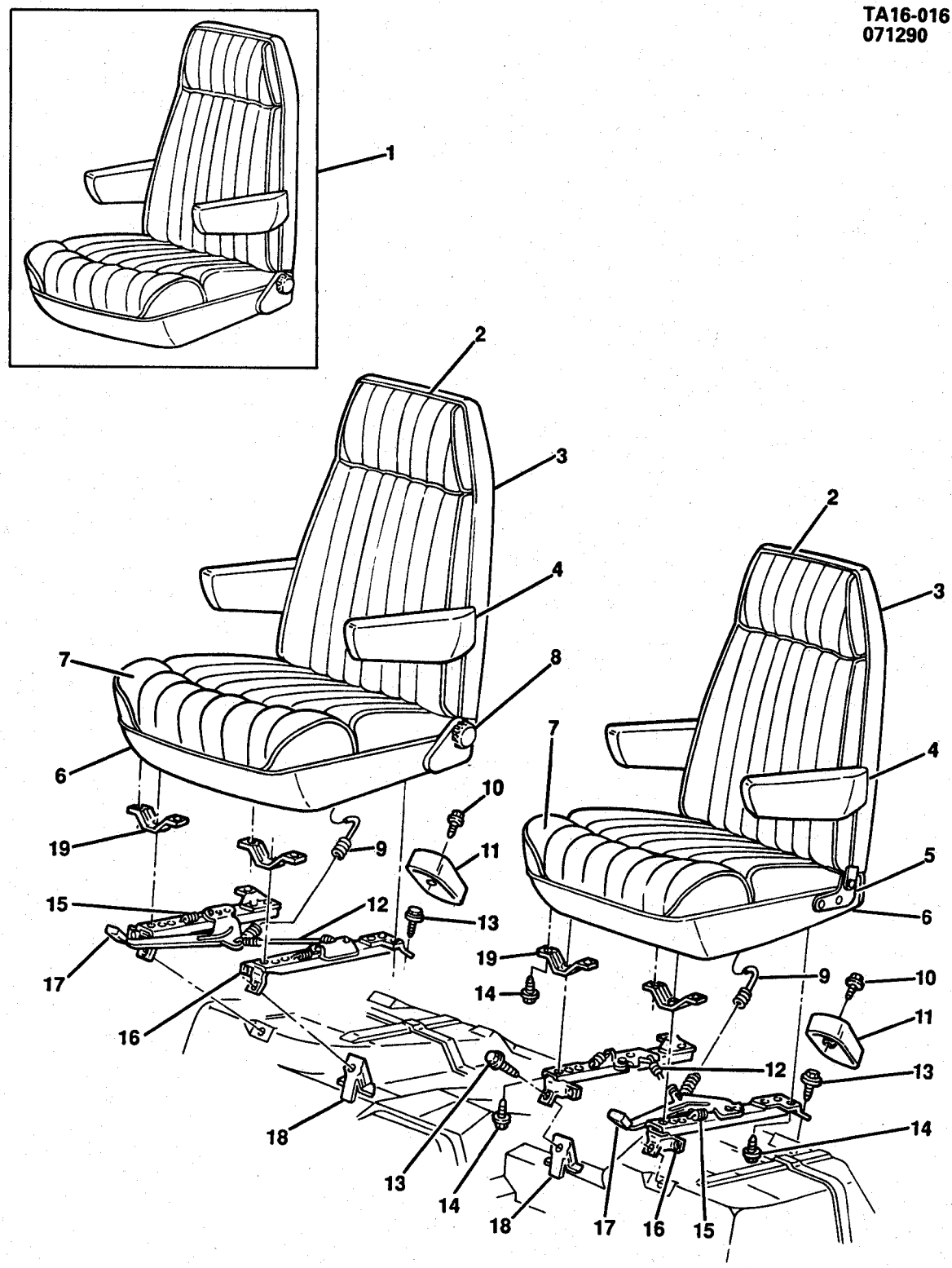

TA16-016

© 1990 GENERAL MOTORS SERVICE PARTS OPERATIONS—LIGHT TRUCK 52R

1989-1991 RV SEAT ASM/FRONT BUCKET (A95)

NOTE: QUANTITY IS ONE PER ASSEMBLY UNLESS OTHERWISE SPECIFIED.

1.	16.670	**SEAT**, DR(*1,2)	
	16.670	**SEAT**, PASS(*1,2)	
2.	16.724	**TRIM**, DR & PASS SEAT BACK CUSHION(*2)	
3.	16.720	**CUSHION**, SEAT BACK (LESS TRIM)	15617003
	16.720	**FRAME**, SEAT BACK	15617001
4.	16.155	**ARMREST**, SEAT-LH(*2)	
	16.155	**ARMREST**, SEAT-RH(*2)	
5.	16.682	**HINGE**, D/SEAT	15599177
	16.682	**HINGE**, P/SEAT	15599178
6.	16.715	**CUSHION**, SEAT (LESS TRIM)	15617002
	16.717	**FRAME**, SEAT CUSHION (2 REQD)	15616967
7.	16.717	**TRIM**, DR & PASS SEAT CUSHION(*2)	
8.	16.682	**RECLINER**, D/SEAT	15599653
	16.682	**RECLINER**, P/SEAT	15599654
9.	16.682	**SPRING**, SEAT ADJUSTER RETURN	9728051
10.	8.977	**SCREW**, OV HD C/R (8X32X.625)(AS REQD)	9425578
11.	16.682	**COVER**, SEAT ADJUSTER (2 REQD)(PAINT AS REQD)(PART OF #16)	14027511
12.	16.682	**WIRE**, SEAT ADJUSTER LOCK (2 REQD)	15549570
13.	8.977	**SCREW**, HEX HD TAP (.375X16X1.125)(AS REQD)(PART OF #16)	9431970
14.	8.900	**BOLT**, HEX W/CON WA (5/16"-18X7/8")	3846202
15.	16.682	**SPRING**, SEAT ADJUSTER LATCH	329457
16.	16.682	**ADJUSTER**, DR & PASS SEAT-LH (INCL ITEMS #11,13)	15531665
	16.682	**ADJUSTER**, DR & PASS SEAT-RH (INCL ITEM #11)	15531666
17.	16.682	**KNOB**, SEAT ADJUSTER LOCK LEVER	465536
18.	16.682	**BRACKET**, SEAT ADJUSTER (2 REQD)	14025677
19.	16.680	**BRACKET**, SEAT (2 REQD)	15531663

NOTE 1: COMPLETE SEAT ASSEMBLIES ARE CATALOGED AND MADE AVAILABLE ONLY DURING THE CURRENT MODEL YEAR ON A DIRECT SHIP BASIS FROM SOURCE.

NOTE 2: FOR ADDITIONAL PART NUMBERS & TRIM COMBINATIONS REFER TO APPLICABLE CATALOG GROUP OR CHART.

RPO DEFINITIONS

A95 - SEAT, FRT BUCKET, HIGH BACK, PASS & DRIVER RECL

© 1990 GENERAL MOTORS SERVICE PARTS OPERATIONS—LIGHT TRUCK 52R

TR16-098
040789

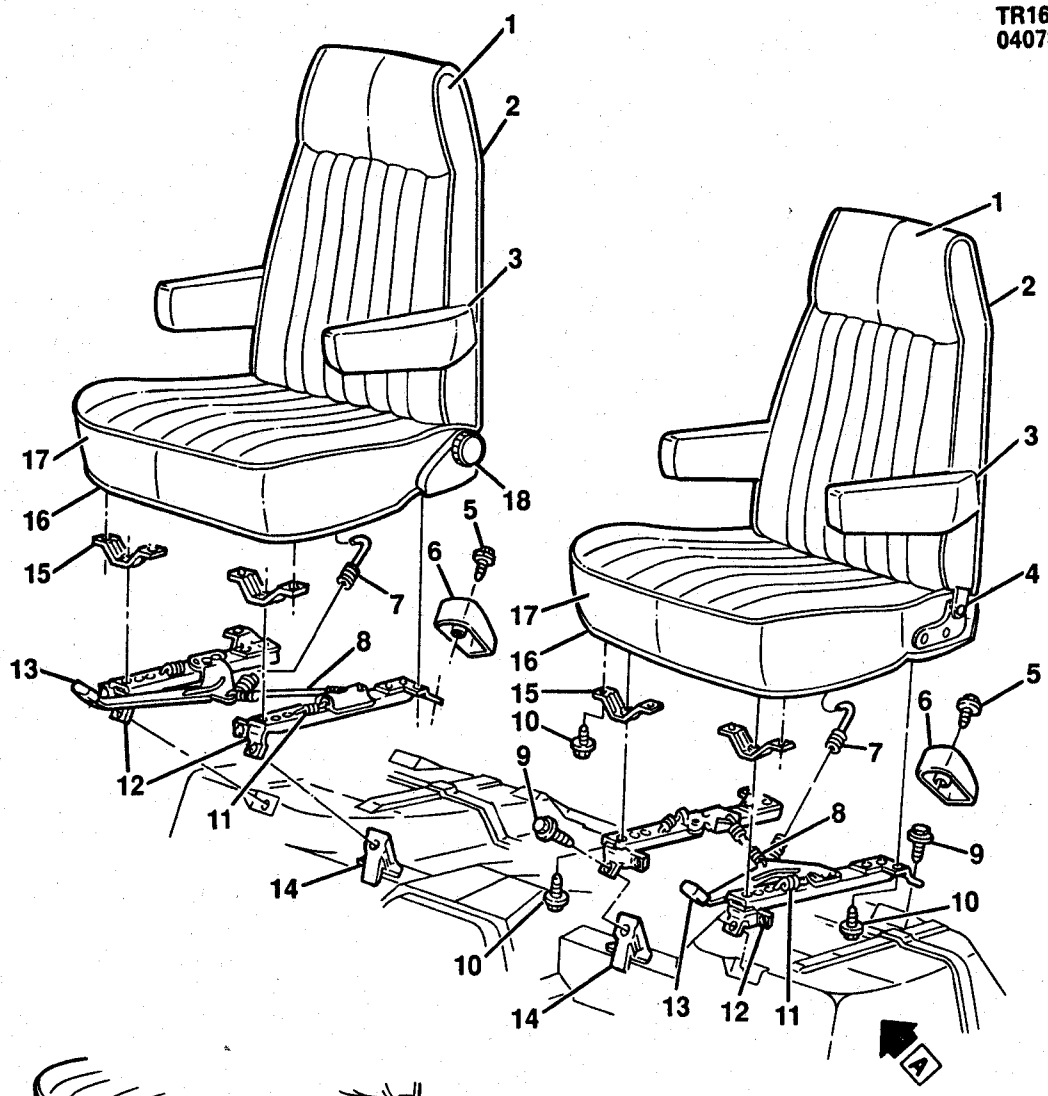

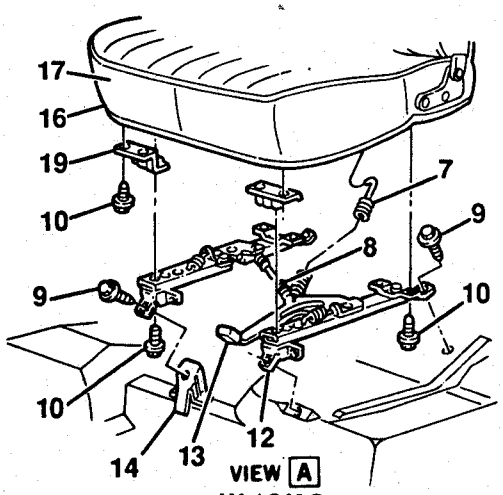

VIEW A
W/6K8

TR16-098

© 1990 GENERAL MOTORS SERVICE PARTS OPERATIONS—LIGHT TRUCK 52R

1985-1986 CK SEAT ASM/BUCKET (A95)
1987-1988 RV SEAT ASM/BUCKET (A95)

1.	16.724	**TRIM**, F/ST BK CUSH(*1)	
2.	16.720	**CUSHION**, D/SEAT BACK (LESS TRIM)	15593893
	16.720	**CUSHION**, P/SEAT BACK (LESS TRIM)	15593894
3.	16.155	**ARM REST**, DR & PASS SEAT-LH(*1)	
	16.155	**ARM REST**, DR & PASS SEAT-RH(*1)	
4.	16.682	**HINGE**, D/SEAT	15599177
	16.682	**HINGE**, P/SEAT	15599178
5.	8.977	**SCREW**, TRUSS TR #6HD C/R TAP/T (8-32X.625)	9425578
6.	16.682	**COVER**, F/SEAT ADJUSTING (PAINT AS REQUIRED)	14027511
7.	16.682	**SPRING**, SEAT ADJUSTER RETURN (11.581)	9728051
8.	16.682	**WIRE**, DR & PASS SEAT ADJUSTER LINK (RV 06)(W/A95)	15549570
	16.682	**WIRE**, DR & PASS SEAT ADJUSTER LINK (RV 03,06)(W/6K8)	14025679
9.	3.015	**BOLT**, HEX W/CONN WA (3/8-16X1 1/8)	6271980
10.	8.900	**BOLT**, HEX LG FL WA (5/16-18X.88 POR)	2014469
11.	16.682	**SPRING**, FRONT SEAT ADJUSTER LATCH	329457
12.	16.682	**ADJUSTER**, DR & PASS SEAT-LH (W/A95)	15531665
	16.682	**ADJUSTER**, DR & PASS SEAT-RH (W/A95)	15531666
	16.682	**ADJUSTER**, DR & PASS SEAT-LH (W/6K8)	14023897
	16.682	**ADJUSTER**, DR & PASS SEAT-RH (W/6K8)	14023898
13.	16.682	**KNOB**, SEAT ADJUSTER LINK LEVER	465536
14.	16.682	**BRACKET**, DR & PASS SEAT ADJUSTER	14025677
15.	16.680	**BRACKET**, DR & PASS SEAT	15531663
16.	16.716	**FRAME**, D/SEAT (INCL CUSHION)(LESS TRIM)	15596601
	16.716	**FRAME**, P/SEAT (INCL CUSHION)(LESS TRIM)	15596602
17.	16.717	**TRIM**, F/SEAT CUSHION(*1)	
18.	16.682	**RECLINER**, D/SEAT (W/A95)	15599653
	16.682	**RECLINER**, P/SEAT (W/A95)	15599654
19.	16.686	**BRACKET**, F/SEAT-LH (W/6K8)	14025673
	16.686	**BRACKET**, F/SEAT-RH (W/6K8)	14025674

NOTE 1: FOR PART NUMBERS & TRIM COMBINATIONS REFER TO APPLICABLE CATALOG GROUP OR CHART.

RPO DEFINITIONS
A95 - SEAT, FRT BUCKET, HIGH BACK, PASS & DRIVER RECL
6K8 - SEAT, BUCKET TYPE, DRIVER & PASS

© 1990 GENERAL MOTORS SERVICE PARTS OPERATIONS—LIGHT TRUCK 52R

TA16-011
041189

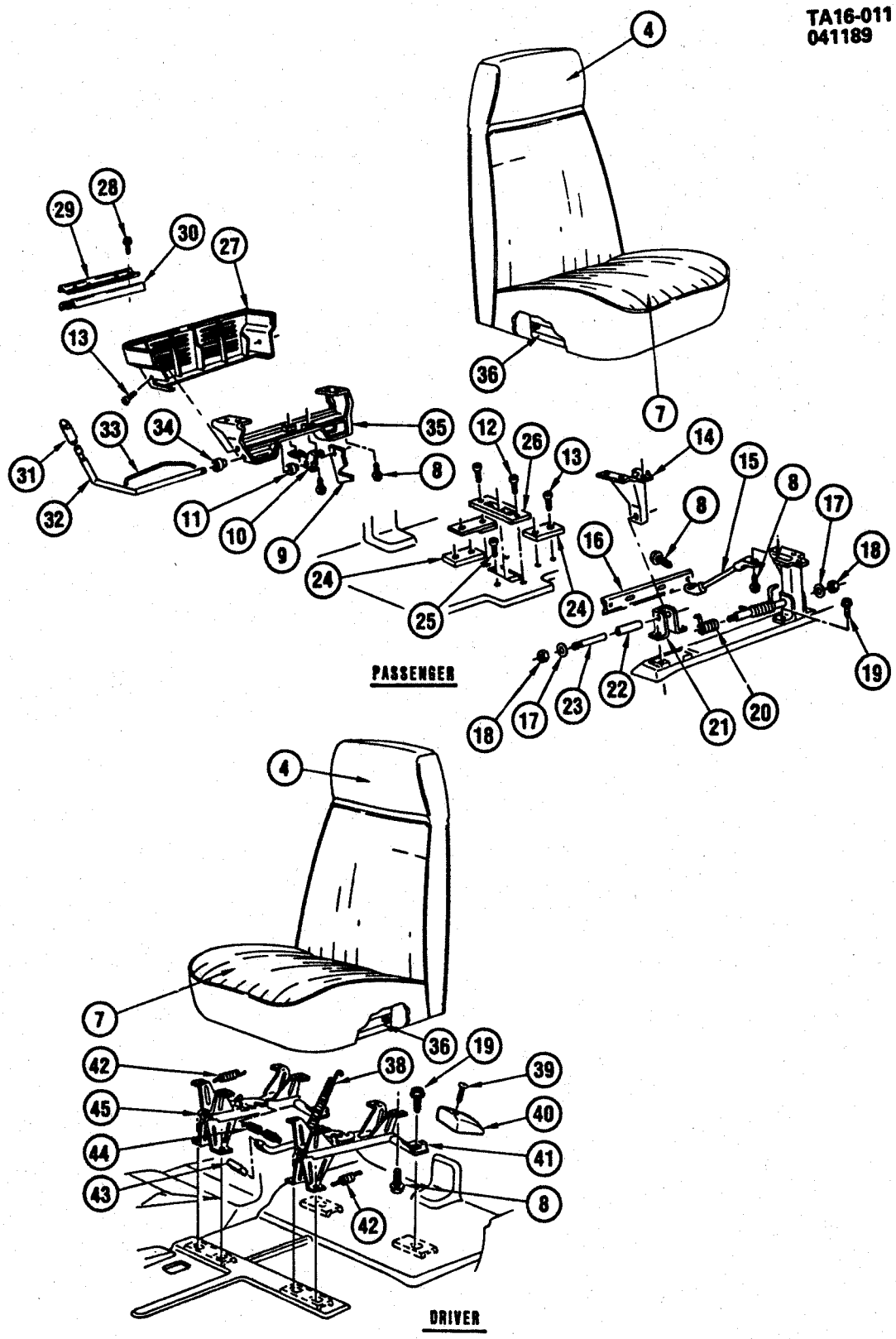

TA16-011

© 1990 GENERAL MOTORS SERVICE PARTS OPERATIONS—LIGHT TRUCK 52R

1985-1986 K(16) SEAT ASM/BUCKET (AV5)(1ST DES)

4.	N.S.	**TRIM**, SEAT BACK CUSHION(*1)	
7.	N.S.	**TRIM**, SEAT CUSHION(*1)	
8.	8.900	**BOLT**, HEX W/CON WA (5/16"-18X7/8")	
9.	16.674	**HOOK**, P/SEAT LATCH (PART OF #35)	470963
10.	16.674	**BRACKET**, P/SEAT LATCH (PART OF #35)	470960
11.	16.674	**BUSHING**, P/SEAT LATCH BRACKET(PART OF #35)	470966
12.	N.S.	**SCREW**, OV HD C/R TAP (M4.2X1.41X25)	
13.	8.977	**SCREW**, PAN HD C/R (M4.2X1.41X16)	
14.	16.674	**BRACKET**, P/SEAT FRONT UPPER-LH	340069
	16.674	**BRACKET**, P/SEAT FRONT UPPER-RH	340070
15.	16.674	**CABLE**, P/SEAT RESTRAINT	476987
16.	16.674	**BRACKET**, P/SEAT PIVOT SPRING	340073
17.	8.929	**WASHER**, FL (11/32"IDX11/16"ODX1/16"THK)	
18.	8.915	**NUT**, HEX (5/16"-18)	
19.	8.977	**SCREW**, HEX HD TAP (3/8"-16X1 1/8")	
20.	16.674	**SPRING**, P/SEAT PIVOT-LH	340071
	16.674	**SPRING**, P/SEAT PIVOT-RH	340072
21.	16.674	**BRACKET**, P/SEAT FRONT LEVER	340068
22.	16.715	**SLEEVE**, P/SEAT PIVOT BOLT	340075
23.	16.674	**STUD**, P/SEAT PIVOT	367281
24.	16.674	**BUMPER**, P/SEAT RR SUPPORT	470954
25.	8.977	**SCREW**, PAN HD C/REC TAP (M4.2X1.41X13)	
26.	16.674	**PLATE**, P/SEAT LATCH SCUFF	471086
27.	16.682	**COVER**, P/SEAT LATCH & SUPPORT(*2)	14067887
28.	8.977	**SCREW**, HEX WA HD TAP (M4.2X1.41X35)	
29.	16.674	**RETAINER**, P/SEAT FT GUARD	476989
30.	16.674	**GUARD**, P/SEAT FOOT	476988
31.	16.674	**KNOB**, P/SEAT LATCH RELEASE LEVER(PART OF #35)	470964
32.	16.674	**LEVER**, P/SEAT LATCH(PART OF #35)	14006061
33.	16.674	**ROD**, P/SEAT LATCH RETURN TORQ(PART OF #35)	14006062
34.	16.674	**BUSHING**, P/SEAT SUPPORT(PART OF #35)	470965
35.	16.674	**LATCH**, P/SEAT RR (INCL #9-11,31-34)	14006060
36.	16.679	**FRAME**, W/SPRING & PAD, DR/PASS SEAT	14067457
38.	16.682	**SPRING**, ADJUSTER ASSIST (11.581)	9728051
39.	8.977	**SCREW**, OV HD C/REC TAP (#8-32X5/8")	
40.	16.682	**COVER**, D/SEAT ADJUSTER(*2)	14027533
41.	16.682	**ADJUSTER**, D/SEAT-LH (INCL #42,43)	14023899
42.	16.682	**SPRING**, ADJUSTER LATCH(PART OF #41,45)	329457
43.	16.682	**KNOB**, ADJUSTER LINK LEVER(PART OF #41)	465536
44.	16.682	**WIRE**, D/SEAT ADJUSTER LINK	14025680
45.	16.682	**ADJUSTER**, D/SEAT-RH (INCL #42)	14023900

NOTE 1: FOR ADDITIONAL PART NUMBERS & TRIM COMBINATIONS REFER TO APPLICABLE CATALOG GROUP OR CHART.
NOTE 2: PAINT AS REQUIRED.

© 1990 GENERAL MOTORS SERVICE PARTS OPERATIONS—LIGHT TRUCK 52R

TA16-009
050390

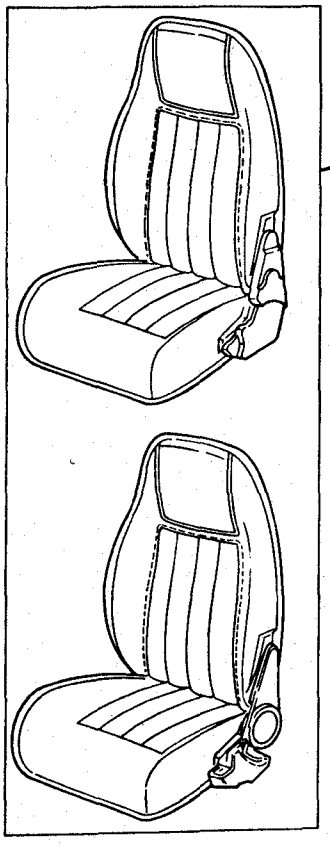

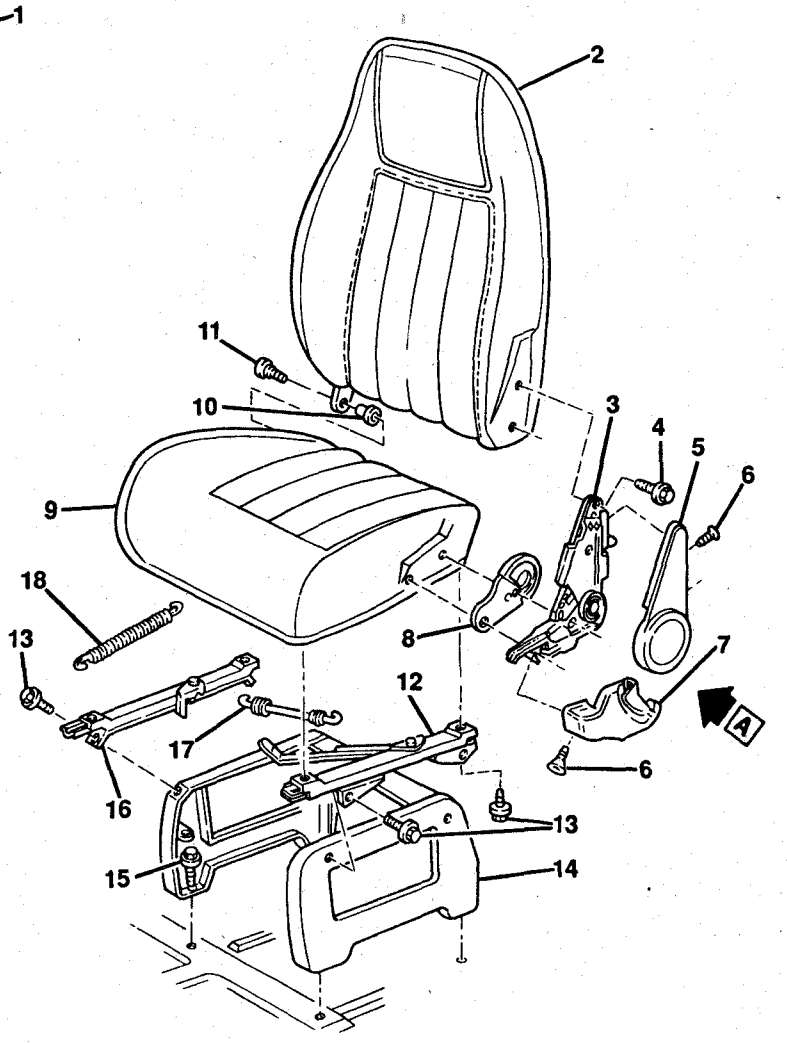

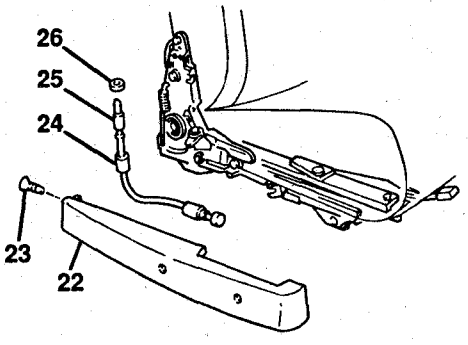

PASSENGER SEAT

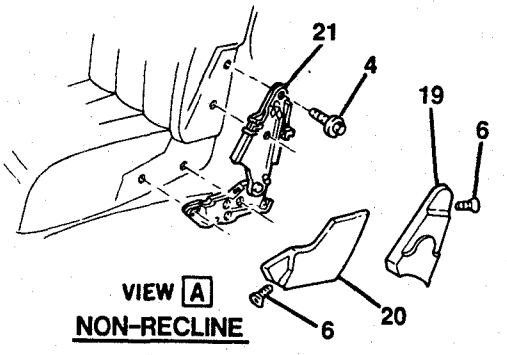

NON-RECLINE

TA16-009

1986 K(16) SEAT ASM/BUCKET (AV5)(2ND DES)
1987-1991 V(16) SEAT ASM/BUCKET (AV5)

NOTE: QUANTITY IS ONE PER ASSEMBLY UNLESS OTHERWISE SPECIFIED.

1.	16.670	**SEAT**, DR(*1,2)	
	16.670	**SEAT**, PASS(*1,2)	
2.	16.720	**FRAME**, SEAT BACK CUSHION	15557023
	16.724	**TRIM**, SEAT BACK CUSHION (NON RECLN)(*2)	
	16.724	**TRIM**, SEAT BACK CUSHION (RECLN)(*2)	
3.	16.682	**CONTROL**, D/SEAT BACK RECLINER	16603081
	16.682	**CONTROL**, P/SEAT BACK RECLINER (1986-88)	16602647
	16.682	**CONTROL**, P/SEAT BACK RECLINER (1989-91)	16604538
	16.682	**KNOB**, RECLINER RELEASE HANDLE (PAINT AS REQD)	20334629
4.	16.720	**SCREW**, SEAT BACK LOCK (M8X1.25X56.50)(AS REQD)	20025648
5.	16.682	**COVER**, D/SEAT BACK RECLINER HINGE LOCK UPR(*2)	
	16.720	**COVER**, P/SEAT BACK RECLINER HINGE LOCK UPR(*2)	
6.	8.977	**SCREW**, OV HD C/R C/SUNK (M4.2X1.41X20)(AS REQD)	
7.	16.682	**COVER**, D/SEAT BACK RECLINER HINGE LOCK LWR(*2)	
	16.682	**COVER**, P/SEAT BACK RECLINER HINGE LOCK LWR(*2)	
8.	16.720	**PROTECTOR**, D/SEAT BACK RECLINER TRIM-LH (1986-87)(PAINT AS REQD)	20366005
	16.720	**PROTECTOR**, P/SEAT BACK RECLINER TRIM-RH (1986-87)(PAINT AS REQD)	20366004
9.	16.716	**FRAME**, W/PAD, SEAT CUSHION	14071461
	16.717	**TRIM**, SEAT CUSHION(*2)	
10.	16.720	**BUSHING**, SEAT BACK LOCK PIVOT	14059238
11.	16.720	**BOLT**, SEAT BACK LOCK PIVOT	14056723
12.	16.682	**ADJUSTER**, D/SEAT OTR	15594697
	16.682	**ADJUSTER**, P/SEAT OTR	15591066
13.	8.900	**BOLT**, HFH (M8X1.25X20 10.9 POR)(AS REQD)	11514343
14.	16.686	**RISER**, D/SEAT (PAINT AS REQD)	15594688
	16.686	**RISER**, P/SEAT (PAINT AS REQD)	15591065
15.	8.977	**SCREW**, HEX HD TAP (3/8"-16X1 1/8")	
16.	16.682	**ADJUSTER**, D/SEAT INR	15594696
	16.682	**ADJUSTER**, P/SEAT INR	15591069
17.	16.682	**WIRE**, D/SEAT ADJUSTER LOCK	15594695
18.	16.682	**SPRING**, SEAT ADJUSTER RETURN (AS REQD)	20056525
19.	16.720	**COVER**, D/SEAT BACK LOCK UPR (NON-RECLN)(PAINT AS REQD)	
	16.720	**COVER**, P/SEAT BACK LOCK UPR (NON-RECLN)(PAINT AS REQD)	
20.	16.720	**COVER**, D/SEAT BACK LOCK LWR (NON-RECLN)(PAINT AS REQD)	20289493
	16.720	**COVER**, P/SEAT BACK LOCK LWR (NON-RECLN)(PAINT AS REQD)	15627452
21.	16.720	**LOCK**, D/SEAT BACK (RECLN)(1986-87)	20238207
	16.720	**LOCK**, D/SEAT BACK (RECLN)(1988-91)	16604537
	16.720	**LOCK**, P/SEAT BACK (RECLN)(1986-87)	16604536
	16.720	**LOCK**, P/SEAT BACK (RECLN)(1988-91)	16604536
22.	16.682	**COVER**, P/SEAT ADJUSTER TRIM (GRAY)(PAINT AS REQD)	15591061
23.	8.977	**SCREW**, HWH (M4.2X1.41X16)	
24.	16.682	**CABLE**, P/SEAT ADJUSTER OTR RELEASE	20369919
25.	16.682	**PLUNGER**, P/SEAT ADJUSTER OTR RELEASE	20369920
26.	16.682	**BUSHING**, P/SEAT ADJUSTER OTR RELEASE	20573776

NOTE 1: COMPLETE SEAT ASSEMBLIES ARE CATALOGED AND MADE AVAILABLE ONLY DURING THE CURRENT MODEL YEAR ON A DIRECT SHIP BASIS FROMSOURCE.

NOTE 2: FOR ADDITIONAL PART NUMBERS & TRIM COMBINATIONS REFER TO APPLICABLE CATALOG GROUP OR CHART.

RPO DEFINITIONS

AQ9 - SEAT, FRONT BUCKET, RECLINING

YE9 - COMFORT, CONVENIENCE & DECOR LEVEL #3

© 1990 GENERAL MOTORS SERVICE PARTS OPERATIONS—LIGHT TRUCK 52R

TA16-015
060189

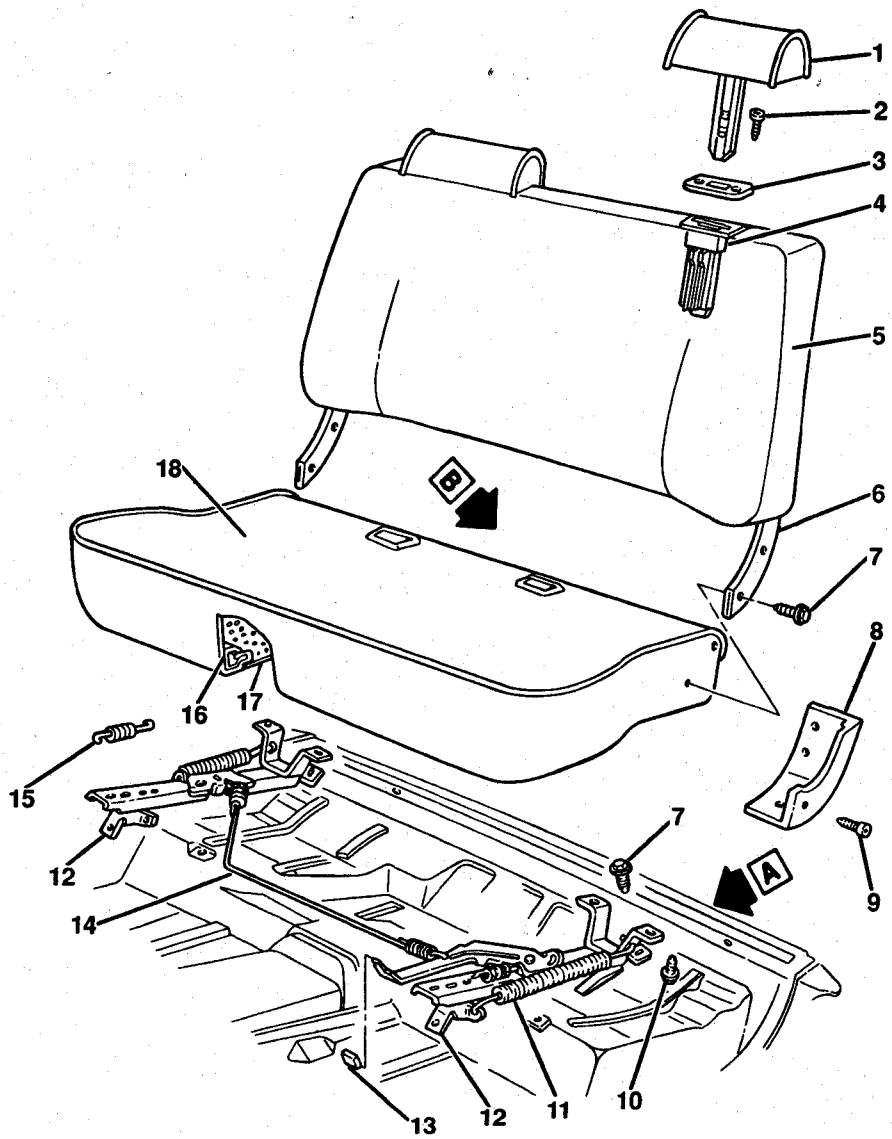

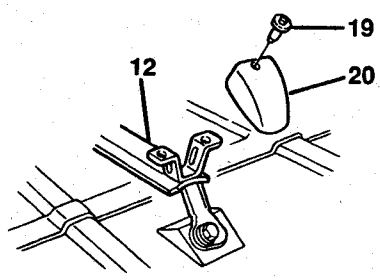

VIEW A

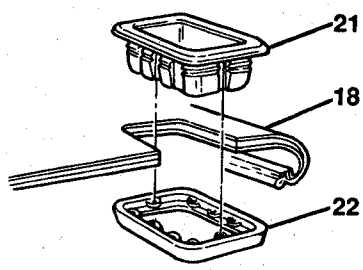

VIEW B

TA16-015

1985-1986 CK(06-43) SEAT ASM/FRONT BENCH (A52)
1987-1991 RV(06-43) SEAT ASM/FRONT BENCH (A52)

NOTE: QUANTITY IS ONE PER ASSEMBLY UNLESS OTHERWISE SPECIFIED.

1.	16.718	**TRIM**, HEAD RESTRAINT(*1)	
2.	8.977	**SCREW**, OV HD C/S TORX (M4.2X1.41X20)(AS REQD)	11504659
3.	16.718	**ESCUTCHEON**, HEAD RESTRAINT GUIDE (2 REQD)(PAINT AS REQD)	20642951
4.	16.718	**GUIDE**, HEAD RESTRAINT (2 REQD)	20001504
5.	16.724	**TRIM**, SEAT BACK CUSHION(*1)	
6.	16.720	**FRAME**, W/PAD, SEAT BACK CUSHION (EXC HEAD RESTRAINT/A82)(*1)	
	16.720	**FRAME**, W/PAD, SEAT BACK CUSHION (W/HEAD RESTRAINT/A82)(*1)	
7.	8.977	**SCREW**, HEX HD TAP (3/8X16X1 1/8)(AS REQD)	9431970
8.	16.724	**COVER**, SEAT HINGE ARM TRIM-LH (PAINT AS REQD)	14032701
	16.724	**COVER**, SEAT HINGE ARM TRIM-RH (PAINT AS REQD)	14032702
9.	16.724	**SCREW**, HINGE ARM TRIM COVER (1985-86)(AS REQD)	14022885
	16.724	**BOLT**, HINGE ARM TRIM COVER (1987-91)(AS REQD)	15568965
10.	8.900	**BOLT**, HEX W/CON SPR WA (5/16-18X7/8)(AS REQD)	12337916
11.	16.682	**SPRING**, ADJUSTER RETURN (2 REQD)	9728051
12.	16.682	**ADJUSTER**, SEAT-LH (INCL ITEMS #13,15)	14022779
	16.682	**ADJUSTER**, SEAT-RH (INCL ITEM #15)	14022780
13.	16.682	**KNOB**, ADJUSTER LOCK LEVER	465536
14.	16.682	**WIRE**, ADJUSTER LOCK	14022786
15.	16.682	**SPRING**, ADJUSTER LATCH	329457
16.	16.716	**FRAME**, SEAT CUSHION W/HELICAL SPRING	14021204
	16.716	**SPRING**, HELICAL, SEAT CUSHION	14095681
17.	16.716	**PAD**, SEAT CUSHION	15598766
18.	16.717	**TRIM**, SEAT CUSHION(*1)	
19.	8.977	**SCREW**, OV HD C/REC TAP (8X32X5/8)(AS REQD)	9425578
20.	16.682	**COVER**, SEAT ADJUSTER (PAINT AS REQD)	14027511
21.	16.714	**REINFORCEMENT**, SEAT CUSHION BELT OPENING (2 REQD)(PAINT AS REQD)	14063184
22.	16.714	**RETAINER**, SEAT CUSHION BELT OPENING REINFORCEMENT (2 REQD)(PAINT AS REQD)	14063186

NOTE 1: FOR ADDITIONAL PART NUMBERS & TRIM COMBINATIONS REFER TO APPLICABLE CATALOG GROUP OR CHART.

© 1990 GENERAL MOTORS SERVICE PARTS OPERATIONS—LIGHT TRUCK 52R

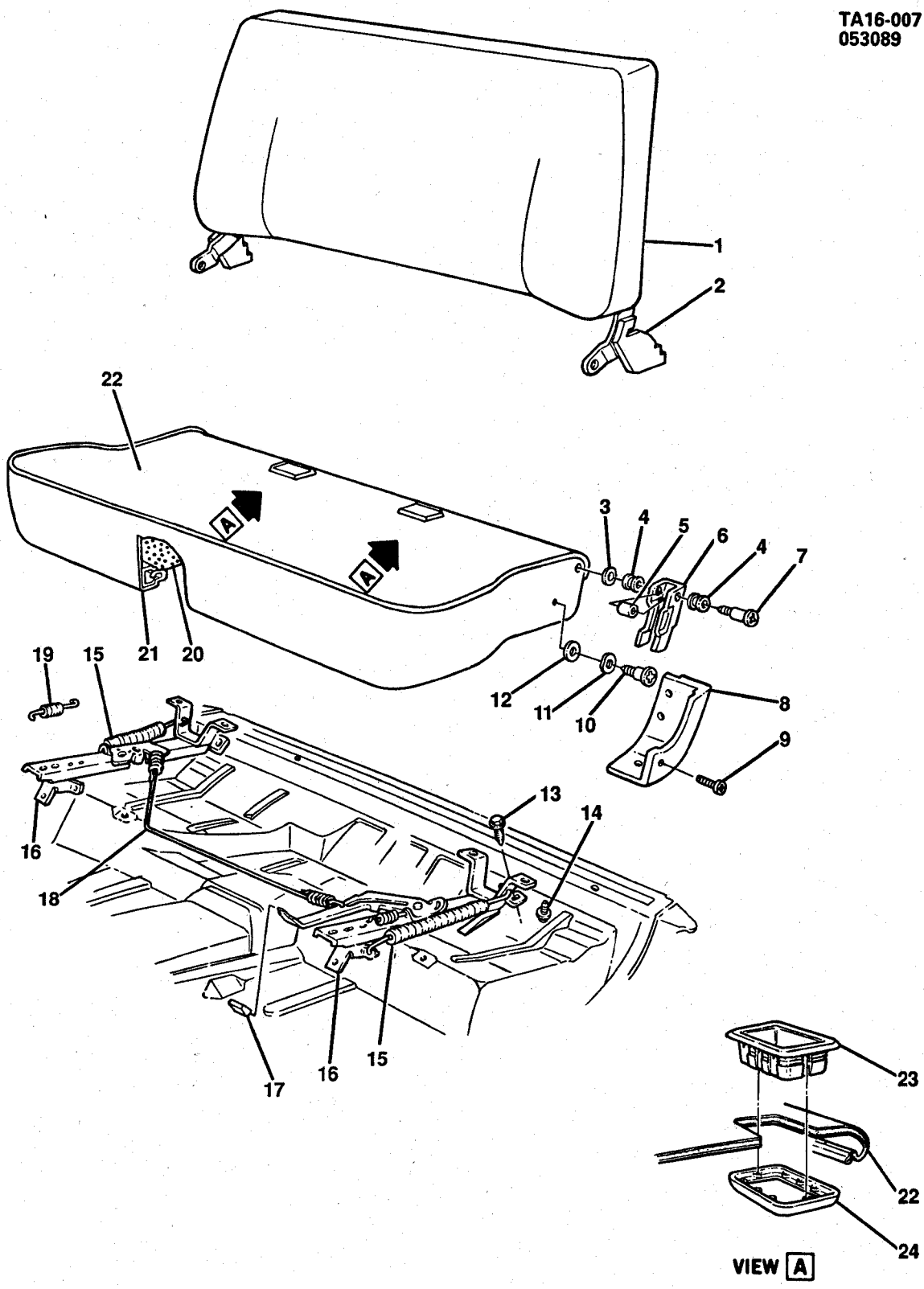

© 1990 GENERAL MOTORS SERVICE PARTS OPERATIONS—LIGHT TRUCK 52R

1985-1986 CK(03) SEAT ASM/BENCH (A52)
1987-1989 RV(03) SEAT ASM/BENCH (A52)

1.	16.724	**TRIM**, SEAT BACK CUSHION(*1)	
2.	16.720	**FRAME**, W/PAD, SEAT BACK CUSHION	15598767
3.	N.S.	**WASHER**, FL (3/8X1X.01)	
4.	16.674	**BUSHING**, SEAT BACK FRAME CATCH	14066195
5.	16.674	**GROMMET**, SEAT BACK FRAME CATCH	14066196
6.	16.674	**CATCH**, SEAT BACK CUSHION-LH	14021209
	16.674	**CATCH**, SEAT BACK CUSHION-RH	14021210
7.	16.674	**STRIKER**, SEAT BACK FRAME	14021211
8.	16.724	**COVER**, SEAT HINGE ARM TRIM-LH(*2)	14037059
	16.724	**COVER**, SEAT HINGE ARM TRIM-RH(*2)	14037060
9.	16.724	**SCREW**, SEAT BACK FRAME HINGE ARM TO COVER (16.225)	15568965
10.	16.686	**BOLT**, SEAT BACK CUSHION FRAME	15569026
11.	8.928	**WASHER**, WAVE (9/16X7/8X1/32, 1050)	335367
12.	16.720	**WASHER**, SEAT BACK FRAME HINGE ARM PIVOT (7.629)	6273619
13.	8.977	**SCREW**, HEX HD TAP (3/8-16X1 1/8, T PT)	9431970
14.	8.900	**BOLT**, HEX LG FL WA (5/16"-18X.88, M275 PHOS ORG)	2014469
15.	16.682	**SPRING**, ADJUSTER RETURN (11.581)	9728051
16.	16.682	**ADJUSTER**, SEAT-LH (INCL #17,19)	14022777
	16.682	**ADJUSTER**, SEAT-RH (INCL #19)	14022778
17.	16.682	**KNOB**, ADJUSTER LINK LEVER(PART OF #16)	465536
18.	16.682	**WIRE**, ADJUSTER LINK	14022786
19.	16.682	**SPRING**, ADJUSTER LATCH (PART OF #16)	329457
20.	16.716	**PAD**, SEAT CUSHION	15598766
21.	16.716	**FRAME**, INCLS HELICAL SPRING	14021204
	16.716	**SPRING**, HELICAL, SEAT CUSHION SPRING	14095681
22.	16.717	**TRIM**, SEAT CUSHION(*1)	
23.	16.714	**REINF**, SEAT CUSHION BELT OPENING(*2)	14063184
24.	16.714	**RETAINER**, SEAT CUSHION BELT OPENING REINFORCMENT	14063186

NOTE 1: FOR ADDITIONAL PART NUMBERS & TRIM COMBINATIONS REFER TO APPLICABLE CATALOG GROUP OR CHART.
NOTE 2: PAINT AS REQ'D.

© 1990 GENERAL MOTORS SERVICE PARTS OPERATIONS—LIGHT TRUCK 52R

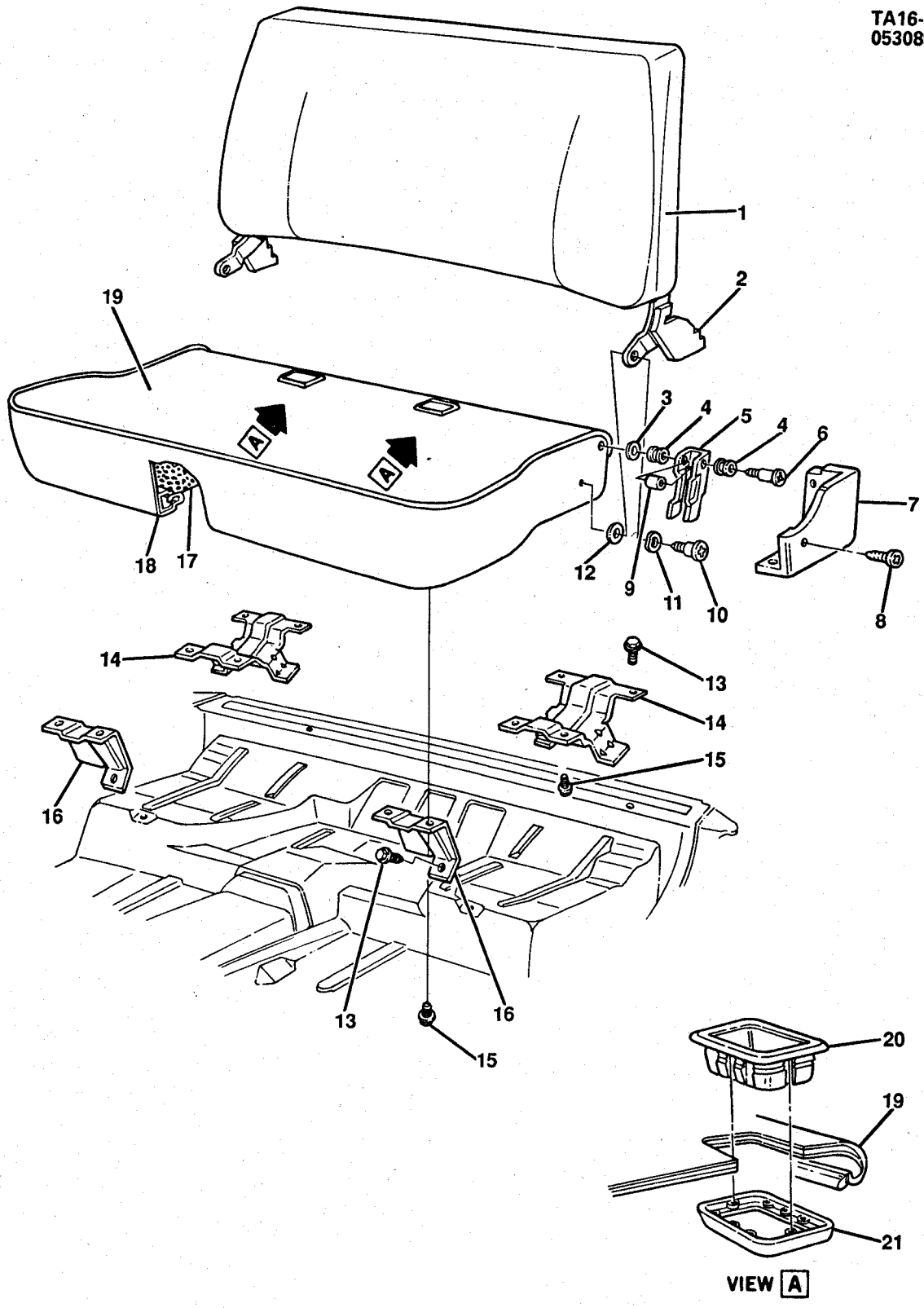

© 1990 GENERAL MOTORS SERVICE PARTS OPERATIONS—LIGHT TRUCK 52R

1985-1986 CK(43) SEAT ASM/REAR BENCH (AS3)
1987-1991 RV(43) SEAT ASM/REAR BENCH (AS3)

NOTE: QUANTITY IS ONE PER ASSEMBLY UNLESS OTHERWISE SPECIFIED.

1.	16.724	**TRIM**, SEAT BACK CUSHION(*1)	
2.	16.720	**FRAME**, W/PAD, SEAT BACK CUSHION	15598767
3.	N.S.	**WASHER**, FL (3/8X1X.01)	
4.	16.674	**BUSHING**, SEAT BACK FRAME CATCH (2 REQD)	14066195
5.	16.674	**CATCH**, SEAT BACK CUSHION-LH	14021209
	16.674	**CATCH**, SEAT BACK CUSHION-RH	14021210
6.	16.674	**STRIKER**, SEAT BACK FRAME (2 REQD)	14021211
7.	16.724	**COVER**, SEAT BACK TRIM-LH (PAINT AS REQD)	14037059
	16.724	**COVER**, SEAT BACK TRIM-RH (PAINT AS REQD)	14037060
8.	16.724	**SCREW**, SEAT BACK TRIM COVER (1985-86)(AS REQD)	14022885
	16.724	**BOLT**, SEAT BACK TRIM COVER (1987-91)(AS REQD)	15568965
9.	16.674	**GROMMET**, SEAT BACK FRAME CATCH (2 REQD)	14066196
10.	16.686	**BOLT**, SEAT BACK CUSHION FRAME (2 REQD)	15569026
11.	8.928	**WASHER**, WAVE (9/16X7/8X1/32, STL)(AS REQD)	335367
12.	16.724	**WASHER**, SEAT BACK CUSHION FRAME (2 REQD)	6273619
13.	8.977	**SCREW**, HEX HD TAP (3/8-16X1 1/8)(AS REQD)	9431970
14.	16.674	**BRACKET**, SEAT SUPT RR (2 REQD)	14021227
15.	8.900	**BOLT**, HEX W/CON WA (5/16-18X7/8)(AS REQD)	2014469
16.	16.674	**BRACKET**, SEAT SUPT FRT-LH	14021225
	16.674	**BRACKET**, SEAT SUPT FRT-RH	14021226
17.	16.716	**PAD**, SEAT CUSHION	15598766
18.	16.716	**FRAME**, SEAT CUSHION W/HELICAL SPRING	14021204
	16.716	**SPRING**, HELICAL, RR SEAT CUSHION (AS REQD)	14095681
19.	16.717	**TRIM**, SEAT CUSHION(*1)	
20.	16.714	**REINFORCEMENT**, SEAT CUSHION BELT OPENING (2 REQD)(PAINT AS REQD)	14063184
21.	16.714	**RETAINER**, SEAT CUSHION BELT OPENING REINFORCEMENT (2 REQD)	14063186

NOTE 1: FOR PART NUMBERS & TRIM COMBINATIONS REFER TO APPLICABLE CATALOG GROUP OR CHART.

© 1990 GENERAL MOTORS SERVICE PARTS OPERATIONS—LIGHT TRUCK 52R

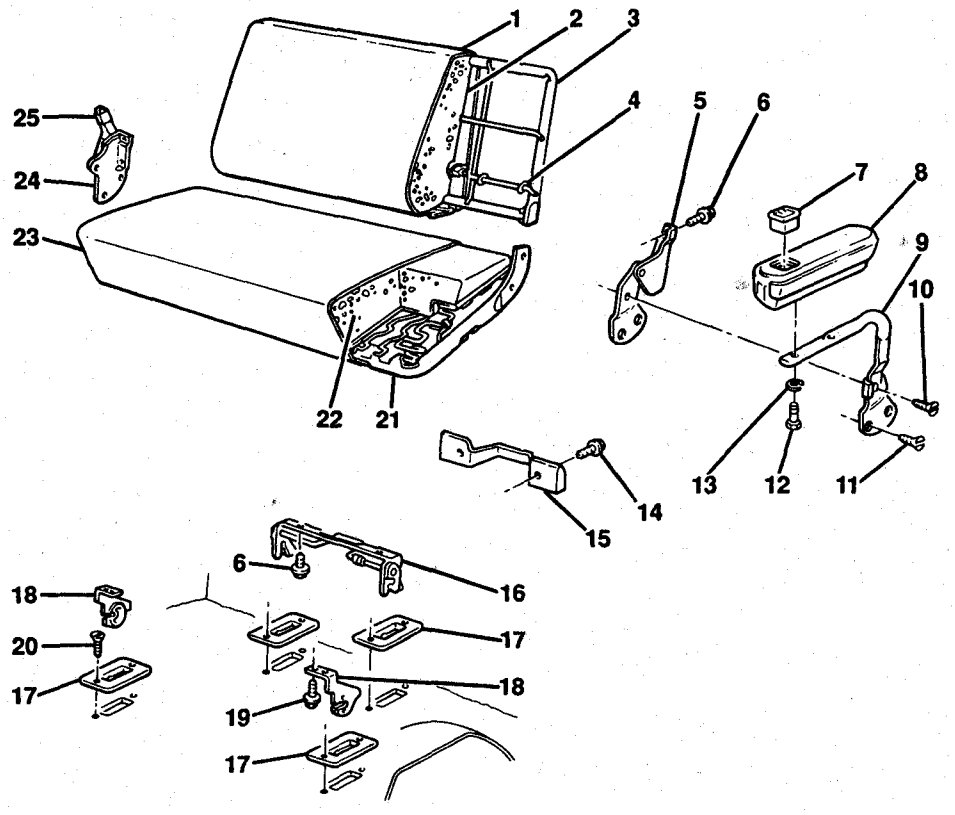

TR16-112

1985-1986 CK(06) SEAT ASM/REAR BENCH (W/REAR BENCH,REMOVABLE AS3)
1987-1991 RV(06) SEAT ASM/REAR BENCH (W/REAR BENCH,REMOVABLE AS3)

NOTE: QUANTITY IS ONE PER ASSEMBLY UNLESS OTHERWISE SPECIFIED.

1.	16.724	**TRIM**, SEAT BACK(*1)	
2.	16.720	**PAD**, SEAT BACK CUSHION	471021
3.	16.720	**FRAME**, RR SEAT BACK (W/CUSHION)	15569035
4.	16.720	**RING**, HOG (AS REQD)	4876466
5.	16.716	**HINGE**, SEAT BACK CUSHION-LH	15569009
	16.716	**BUMPER**, RUBBER HINGE	15569019
6.	8.900	**BOLT**, HEX LG FL WA (5/16-18X.88)	2014469
7.	16.120	**ASHTRAY**, ARMREST(2 REQD)	3940479
8.	16.155	**ARMREST**, REAR SEAT-LH (1985-88 BLUE)(PAINT AS REQD)	14010841
	16.155	**ARMREST**, REAR SEAT-LH (1989-91)(*1)	
	16.155	**ARMREST**, REAR SEAT-RH (1985-88 BLUE)(PAINT AS REQD)	14010842
	16.155	**ARMREST**, REAR SEAT-RH (1989-91)(*1)	
9.	16.155	**SUPPORT**, REAR SEAT ARMREST-LH (1985-88)(PAINT AS REQD)	15591037
	16.155	**SUPPORT**, REAR SEAT ARMREST-LH (1989-91)(PAINT AS REQD)	15624285
	16.155	**SUPPORT**, REAR SEAT ARMREST-RH (1985-88)(PAINT AS REQD)	15591038
	16.155	**SUPPORT**, REAR SEAT ARMREST-RH (1989-91)(PAINT AS REQD)	15624286
10.	16.674	**SCREW**, W/WA, SEAT BACK CUSHION HINGE (2 REQD)	14007512
11.	16.155	**SCREW**, W/WA, SEAT ARMREST TUBE (4 REQD)	14013724
12.	8.900	**BOLT**, HEX (1/4-20, CAD OR ZC)(AS REQD)	180024
13.	8.931	**WASHER**, SPR LK (.26X.489)(AS REQD)	9439510
14.	8.900	**BOLT**, HEX (5/16-18X1, 300M CAD)(AS REQD)	9437847
15.	16.682	**COVER**, SEAT LATCH (PAINT AS REQD)	14010780
16.	16.674	**LATCH**, W/SUPT, REAR SEAT (1985-88)	14003006

© 1990 GENERAL MOTORS SERVICE PARTS OPERATIONS—LIGHT TRUCK 52R

16.	16.674	**LATCH**, W/SUPT, REAR SEAT (1989-91)	15628689
17.	16.674	**PLATE**, SEAT LATCH SCUFF (4 REQD)	471026
18.	16.715	**SUPPORT**, SEAT-LH	14003011
	16.715	**SUPPORT**, SEAT-RH	14003012
	16.715	**PLATE**, SEAT SUPT	14003021
19.	16.674	**SCREW**, SEAT SUPT (4 REQD)	14004782
20.	8.977	**SCREW**, (M4.2X1.41X25)(AS REQD)	11501167
21.	16.716	**SPRING**, W/FRAME, SEAT CUSHION	14027797
22.	16.716	**PAD**, SEAT CUSHION	471020
23.	16.717	**TRIM**, SEAT CUSHION(*1)	
24.	16.716	**HINGE**, SEAT BACK CUSHION-RH (INCL ITEM #25)	15569010
	16.716	**BUMPER**, RUBBER HINGE	15569019
25.	16.716	**KNOB**, SEAT CUSHION HINGE LEVER (PART OF ITEM #24)	473187

NOTE 1: FOR PART NUMBERS & TRIM COMBINATIONS REFER TO APPLICABLE CATALOG GROUP OR CHART.

© 1990 GENERAL MOTORS SERVICE PARTS OPERATIONS—LIGHT TRUCK 52R

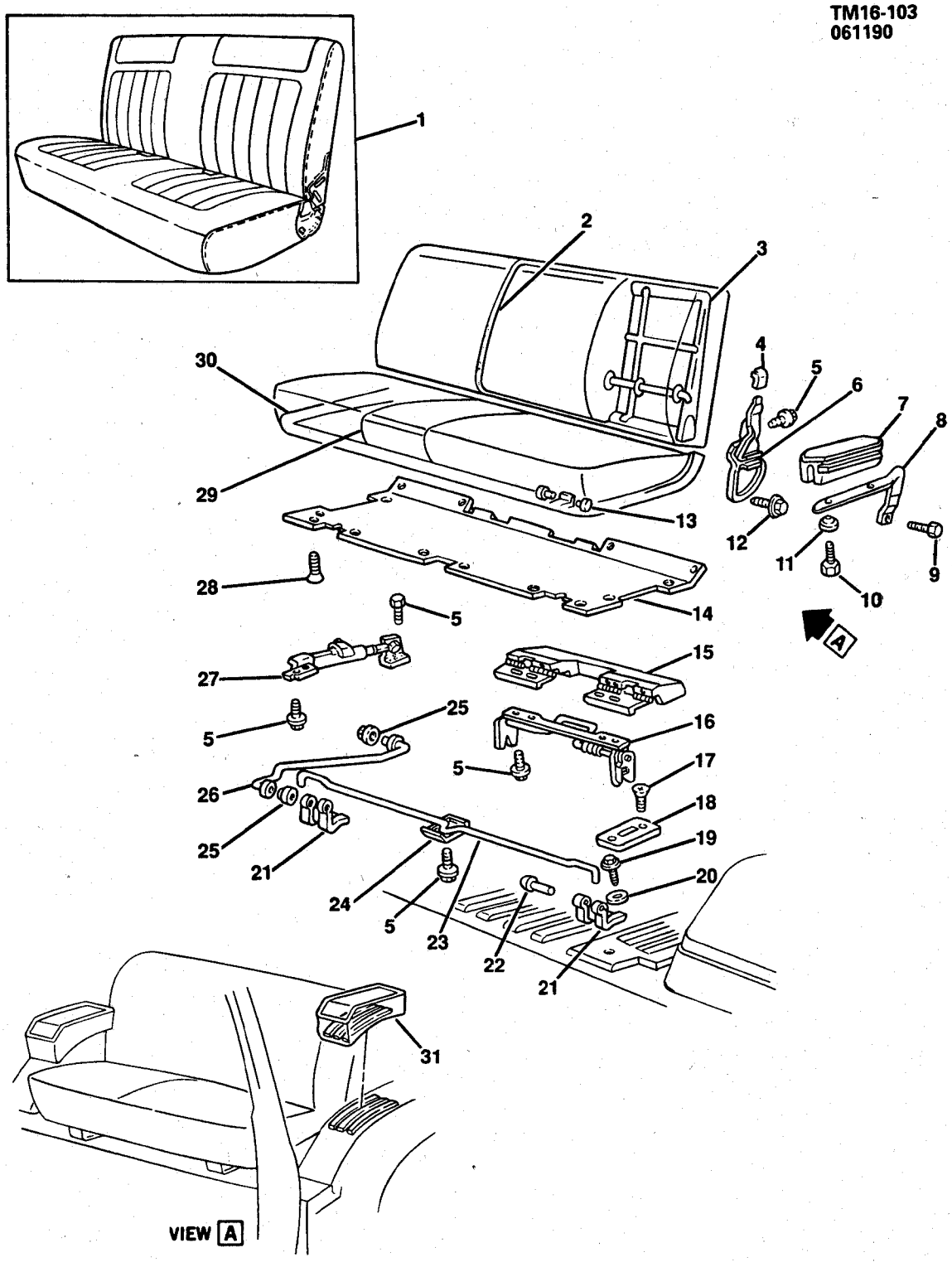

© 1990 GENERAL MOTORS SERVICE PARTS OPERATIONS—LIGHT TRUCK 52R

1985-1986 K(16) SEAT ASM/REAR FOLDING (AM7)
1987-1991 V(16) SEAT ASM/REAR FOLDING (AM7)

NOTE: QUANTITY IS ONE PER ASSEMBLY UNLESS OTHERWISE SPECIFIED.

1.	N.S.	**SEAT**, RR(*1)	
2.	16.724	**TRIM**, SEAT BACK CUSHION(*2)	
3.	16.720	**FRAME**, RR SEAT BACK (W/CUSHION)	15569035
4.	16.716	**KNOB**, HINGE LEVER	473187
5.	8.900	**BOLT**, HEX LG FL WA (5/16-18 X 7/8, 275M PHOS)(AS REQD)	2014469
6.	16.716	**HINGE**, SEAT BACK-LH (1985-86)	15569009
	16.716	**HINGE**, SEAT BACK-LH (1987-91)	15569009
	16.716	**HINGE**, SEAT BACK-RH	15569010
7.	16.155	**ARMREST**, RR SEAT-LH (1985-89)(PAINT AS REQD)	14010843
	16.155	**ARMREST**, RR SEAT-RH (1985-89)(PAINT AS REQD)	14010844
8.	16.155	**SUPPORT**, RR SEAT ARMREST-LH (1985-89)(PAINT AS REQD)	15591037
	16.155	**SUPPORT**, RR SEAT ARMREST-RH (1985-89)(PAINT AS REQD)	15591038
9.	16.674	**SCREW**, W/WA, CUSHION HINGE & ARMREST TUBE (1985-89)(2 REQD)	14007512
10.	8.931	**WASHER**, SPR LK (1/4") (1985-89)(AS REQD)	9439510
11.	8.900	**BOLT**, HEX (1/4"-20X1 1/4")(1985-89)(AS REQD)	180024
12.	16.155	**SCREW**, W/WA, CUSHION HINGE (4 REQD)	14013724
13.	16.716	**BUSHING**, FRT HINGE (4 REQD)	335524
14.	16.670	**PANEL**, CUSHION TRIM(*2)	
15.	16.682	**COVER**, LATCH (PAINT AS REQD)	14014293
16.	16.674	**LATCH**, W/GUIDE, RR SEAT	15628698
17.	8.977	**SCREW**, OV HD C/R TAP (M4.2X1.41X25)(AS REQD)	11501167
18.	16.674	**PLATE**, LATCH SCUFF (2 REQD)	471026
19.	8.900	**BOLT**, HEX (1/2"-13X1 3/4")	
20.	8.931	**WASHER**, SPR LK (1/2")(AS REQD)	9439514
21.	16.716	**HINGE**, FRT (2 REQD)	471018
22.	16.716	**PIN**, FRT LOWER HINGE (2 REQD)	470974
23.	16.715	**ROD**, FRT HINGE TORQUE	471010
24.	16.715	**CLAMP**, TORQUE ROD	14027799
25.	16.674	**RING**, SEAT TORQUE ROD (2 REQD)	3798068
26.	16.674	**ROD**, LATCH COVER ACTUATING	473197
27.	17.510	**STRUT**, RR SEAT STOWAGE	471079
28.	16.716	**SCREW**, CUSHION TRIM PANEL (AS REQD)	14091215
29.	16.717	**TRIM**, SEAT CUSHION(*2)	
30.	16.716	**SPRING**, W/FRAME, SEAT CUSHION	14027797
31.	16.155	**ARMREST**, RR SEAT (1990-91 BLUE, W/B30)	15614207
	16.155	**ARMREST**, RR SEAT (1990 GRAY, W/B30)	15614209
	16.155	**ARMREST**, RR SEAT (1991 GRAY, W/B30)	15641534
	16.155	**ARMREST**, RR SEAT (1990-91 COGNAC, W/B30)	15614211
	16.155	**ARMREST**, RR SEAT (1990-91 RED, W/B30)	15641230

NOTE 1: COMPLETE SEAT ASSEMBLIES ARE AVAILABLE THROUGH CONTACTING GM/SPO & FURNISHING VIN CODE. GM WILL PROVIDE ONLY SEAT ASSEMBLIES THAT VEHICLES ARE BUILT WITH, NO CONVERSIONS GIVEN.

NOTE 2: FOR PART NUMBERS & TRIM COMBINATIONS REFER TO APPLICABLE CATALOG GROUP OR CHART.

RPO DEFINITIONS

B30 - CARPET, FLOOR AND WHEELHOUSE

© 1990 GENERAL MOTORS SERVICE PARTS OPERATIONS—LIGHT TRUCK 52R

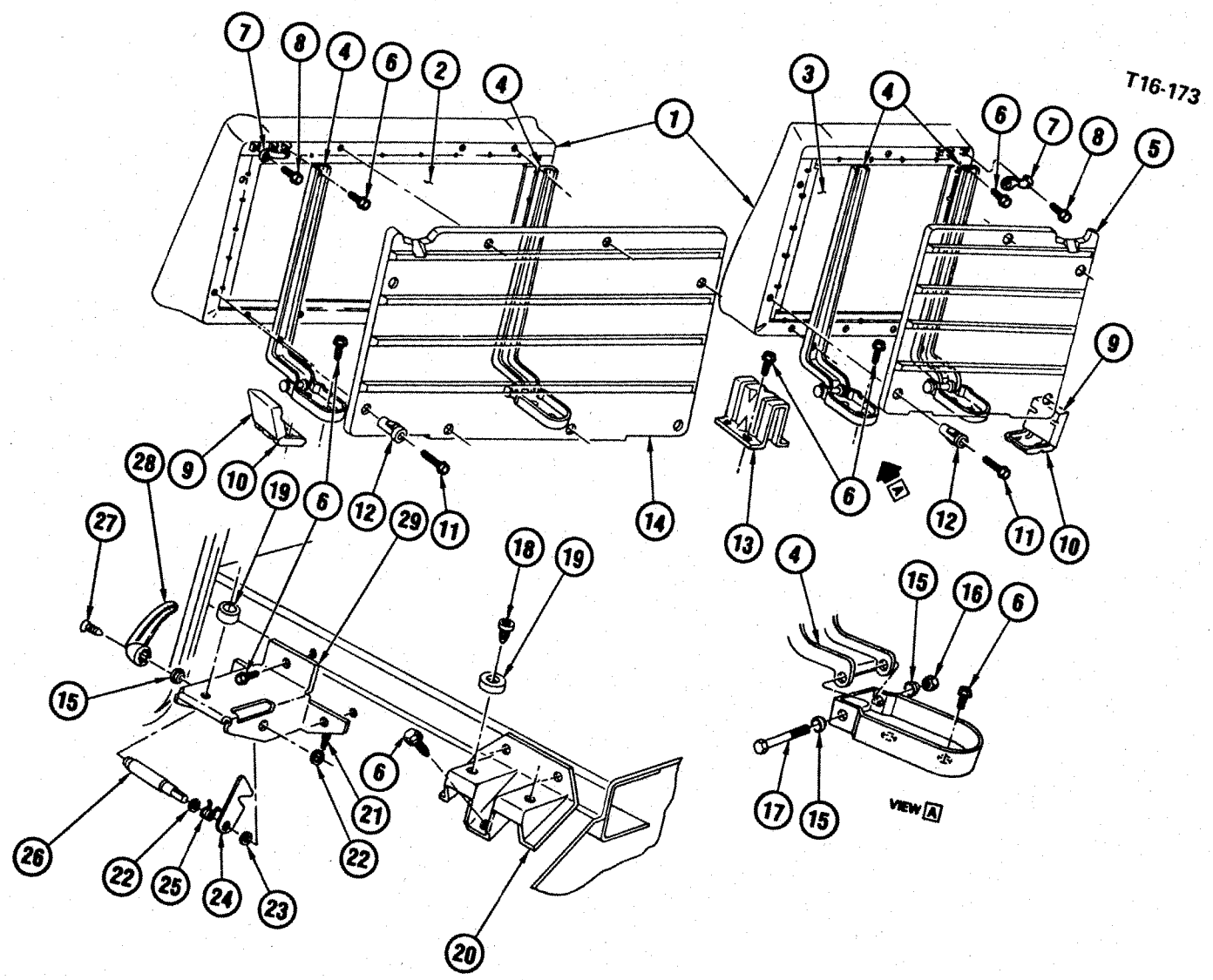

© 1990 GENERAL MOTORS SERVICE PARTS OPERATIONS—LIGHT TRUCK 52R

1985-1986 CK(06) SEAT BOTTOM & RELATED PARTS (W/AT5)
1987-1991 RV(06) SEAT BOTTOM & RELATED PARTS (W/AT5)

NOTE: QUANTITY IS ONE PER ASSEMBLY UNLESS OTHERWISE SPECIFIED.

1.	16.717	**TRIM**, CTR SEAT CUSHION-LH(*1)	
	16.717	**TRIM**, CTR SEAT CUSHION-RH(*1)	
2.	16.716	**FRAME**, CTR SEAT CUSHION-LH	14037011
	16.716	**PAD**, CTR SEAT CUSHION-LH	14036933
3.	16.716	**FRAME**, CTR SEAT CUSHION-RH	14037012
	16.716	**PAD**, CTR SEAT CUSHION-RH	14036934
4.	16.715	**HINGE**, CTR SEAT SUPT (INCL ITEMS #15,16,17)(4 REQD)	14037015
5.	16.670	**PANEL**, CTR SEAT CUSHION TRIM-RH (GRAY)(PAINT AS REQD)	15591020
6.	8.900	**SCREW**, W/CON WA (5/16-18X7/8)(AS REQD)	2014469
7.	16.716	**STRIKER**, CTR CUSHION & SEAT BACK CUSHION LATCH(2 REQD)	14027538
8.	8.900	**SCREW**, HEX W/CON WA (5/16"-18X3/4")	351792
9.	16.674	**COVER**, CUSHION STOP OTR BRKT (1985-88 BLUE)(2 REQD)	14037127
	16.674	**COVER**, CUSHION STOP OTR BRKT (1989-91 BLUE)(2 REQD)	15602051
	16.674	**COVER**, CUSHION STOP OTR BRKT (1985-87 BLACK)(2 REQD)	14037131
	16.674	**COVER**, CUSHION STOP OTR BRKT (1985-87 SADDLE)(2 REQD)	14069924
	16.674	**COVER**, CUSHION STOP OTR BRKT (1988-91 COGNAC)(2 REQD)	15549385
	16.674	**COVER**, CUSHION STOP OTR BRKT (1985-90 GRAY)(2 REQD)	14069925
	16.674	**COVER**, CUSHION STOP OTR BRKT (1991 GRAY)(2 REQD)	15641529
	16.674	**COVER**, CUSHION STOP OTR BRKT (1990-91 RED)(2 REQD)	15624149
10.	16.715	**STOP**, CTR SEAT BACK CUSHION STOP OTR	14037018
11.	8.977	**SCREW**, HEX TAP W/FL WA (M6.3X1.81X40)(AS REQD)	11508027
12.	16.716	**SPACER**, CTR SEAT CUSHION TRIM PANEL (14 REQD)	14043814
13.	16.715	**STOP**, CTR SEAT BACK CUSHION STOP INR	14037019
14.	16.670	**PANEL**, CTR SEAT CUSHION TRIM-LH (GRAY)(PAINT AS REQD)	15591019
15.	16.716	**BUSHING**, SEAT CUSHION LATCH ROD(PART OF #4)	329180
16.	N.S.	**NUT**, WELD (3/8"-16)(PART OF ITEM #4)	
17.	N.S.	**BOLT**, SPL SHLD (3/8"-16X2 5/8")(PART OF ITEM #4)	
18.	8.977	**SCREW**, PAN HD C/REC TAP (#10-16X1/2)(AS REQD)	9437761
19.	16.716	**BUMPER**, CTR SEAT STOP (AS REQD)	7726729
20.	16.715	**STOP**, CTR SEAT STOP	14037017
21.	8.938	**PIN**, COTTER (.062X.500 CZ)(AS REQD)	112726
22.	8.929	**WASHER**, SPL (.390X.750X.03 ST)(AS REQD)	382105
23.	8.928	**WASHER**, ARCHED SPRING (.385X1.245)(AS REQD)	3953987
24.	16.674	**LATCH**, SEAT CUSHION (2 REQD)	329151
25.	16.716	**SPRING**, SEAT CUSHION LATCH-LH	330317
	16.716	**SPRING**, SEAT CUSHION LATCH-RH	330318
26.	16.715	**ROD**, SEAT CUSHION LATCH (2 REQD)	370505
27.	8.977	**SCREW**, FL TR HD C/SUNK TAP (#8-32X1/2")	
28.	16.674	**HANDLE**, CTR SEAT LATCH (2 REQD)	7681728
29.	16.715	**BRACKET**, CTR SEAT CUSHION STOP & LATCH-LH (PAINT AS REQD)(*2)	14039995
	16.715	**BRACKET**, CTR SEAT CUSHION STOP & LATCH-RH (PAINT AS REQD)(*2)	14039996

NOTE 1: FOR ADDITIONAL PART NUMBERS & TRIM COMBINATIONS REFER TO APPLICABLE CATALOG GROUP OR CHART.
NOTE 2: BOTH BRACKETS INCLUDE ITEMS #15,21,22,23,24,25 & 26.

RPO DEFINITIONS
AT5 - SEAT, CENTER FOLDING

© 1990 GENERAL MOTORS SERVICE PARTS OPERATIONS—LIGHT TRUCK 52R

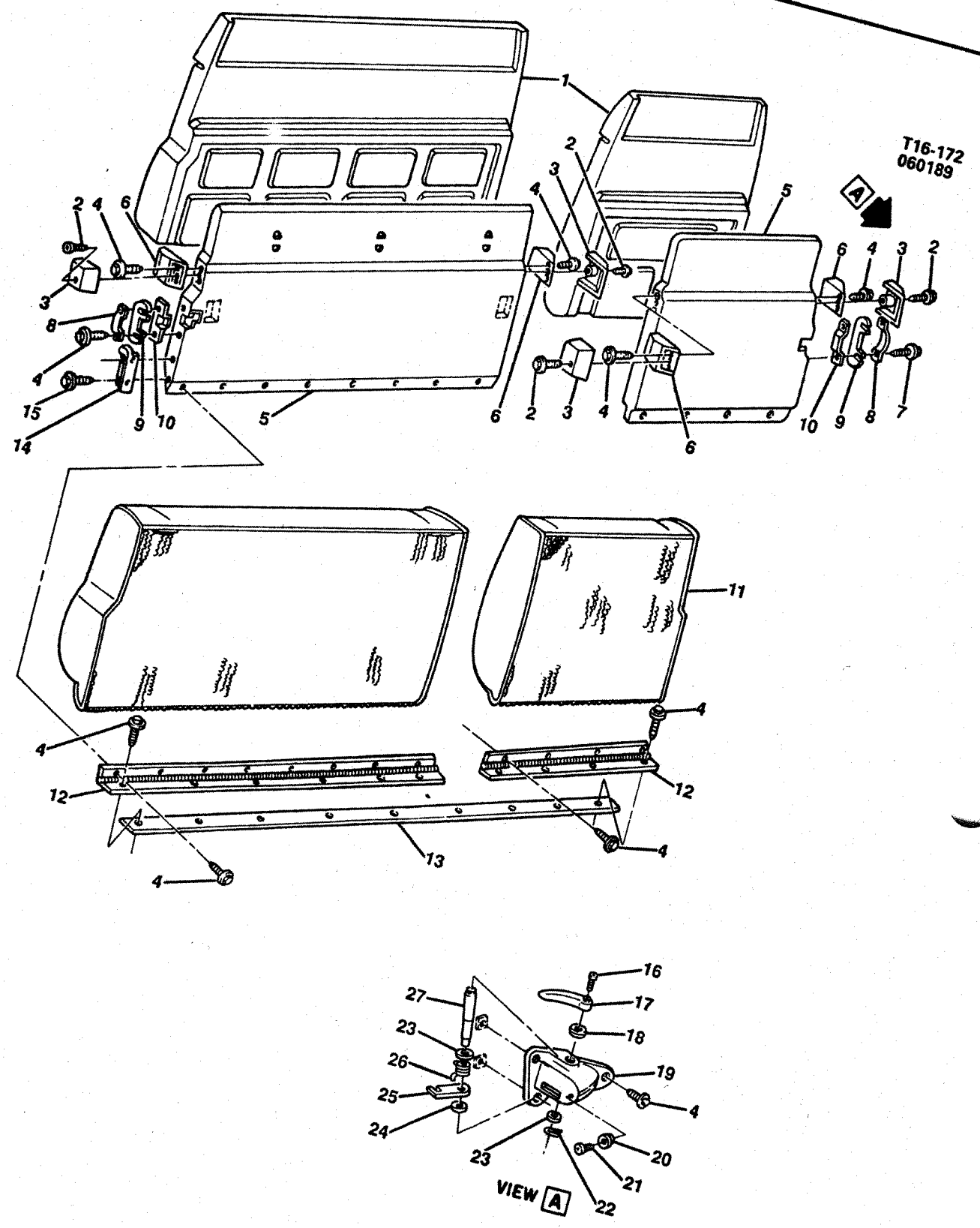

© 1990 GENERAL MOTORS SERVICE PARTS OPERATIONS—LIGHT TRUCK 52R

1985-1986 CK(06) SEAT BACK & RELATED PARTS (W/AT5)

NOTE: QUANTITY IS ONE PER ASSEMBLY UNLESS OTHERWISE SPECIFIED.

1.	16.720	**CUSHION**, SEAT BACK-LH	15591055
	16.720	**CUSHION**, SEAT BACK-RH	15591056
2.	8.900	**SCREW**, TRUSS HD C/REC TAP (8X32X5/8)(AS REQD)	9425578
3.	16.716	**COVER**, SEAT BACK CUSHION STOP BUMPER (SLATE)(4 REQD)(PAINT AS REQD)	14037024
4.	8.900	**SCREW**, W/CON WA (5/16X18X7/8)(AS REQD)	2014469
5.	16.670	**PANEL**, SEAT BACK CUSHION FRAME-RH (1985-87)	15602370
	16.670	**PANEL**, SEAT BACK CUSHION FRAME-RH (1988-91)	15602370
	16.670	**PANEL**, SEAT BACK CUSHION FRAME-LH (1985-87)	14037013
	16.670	**PANEL**, SEAT BACK CUSHION FARME-LH (1988-91)	15602369
6.	16.716	**BUMPER**, SEAT BACK CUSHION STOP (4 REQD)	14037016
7.	16.716	**BOLT**, HEX LG FL WA (5/16X18X.88)(AS REQD)	351792
8.	16.716	**STRIKER**, SEAT CUSHION AND SEAT BACK CUSHION LATCH (2 REQD)	14027538
9.	16.716	**SPACER**, SEAT CUSHION AND SEAT BACK CUSHION STRIKER (2 REQD)	331599
10.	16.720	**SPACER**, SEAT BACK CUSHION LATCH TRIM (2 REQD)	14037143
11.	16.724	**TRIM**, SEAT BACK CUSHION-LH(*1)	
	16.724	**TRIM**, SEAT BACK CUSHION-RH(*1)	
12.	16.716	**HINGE**, SEAT BACK CUSHION-LH	14037167
	16.716	**HINGE**, SEAT BACK CUSHION-RH	14037168
13.	16.716	**SEAL**, SEAT BACK CUSHION HINGE	334283
14.	16.714	**PROTECTOR**, SEAT SHOULDER BELT-LH (PAINT AS REQD)	15602361
	16.714	**PROTECTOR**, SEAT SHOULDER BELT-RH (PAINT AS REQD)	15602362
15.	8.977	**SCREW**, PAN HD (M4.2X1.41X13)(AS REQD)	11509718
16.	8.977	**SCREW**, FL TR HD C/SUNK TAP (8X32X1/2)	9422357
17.	16.674	**HANDLE**, SEAT LATCH (2 REQD)	7681728
18.	16.716	**BUSHING**, SEAT CUSHION LATCH ROD	329180
19.	16.716	**BRACKET**, SEAT BACK CUSHION LATCH-LH	329925
	16.716	**BRACKET**, SEAT BACK CUSHION LATCH-RH	329926
20.	16.716	**BUMPER**, SEAT CUSHION STOP (AS REQD)	7726729
21.	8.977	**SCREW**, PAN HD C/REC TAP (10X16X1/2)(AS REQD)	9437761
22.	8.938	**PIN**, COTTER (1/16X1/2)	
23.	8.929	**WASHER**, SPL (.39X.75)	
24.	8.928	**WASHER**, ARC SPR (25/64X15/16)	
25.	16.674	**LATCH**, SEAT CUSHION	329151
26.	16.716	**SPRING**, SEAT CUSHION LATCH-LH	330317
	16.716	**SPRING**, SEAT CUSHION LATCH-RH	330318
27.	16.715	**ROD**, SEAT BACK CUSHION LATCH (2 REQD)	329927

NOTE 1: FOR PART NUMBERS & TRIM COMBINATIONS REFER TO APPLICABLE CATALOG GROUP OR CHART.

RPO DEFINITIONS
AT5 - SEAT, CENTER FOLDING

© 1990 GENERAL MOTORS SERVICE PARTS OPERATIONS—LIGHT TRUCK 52R

TR16-305
010290

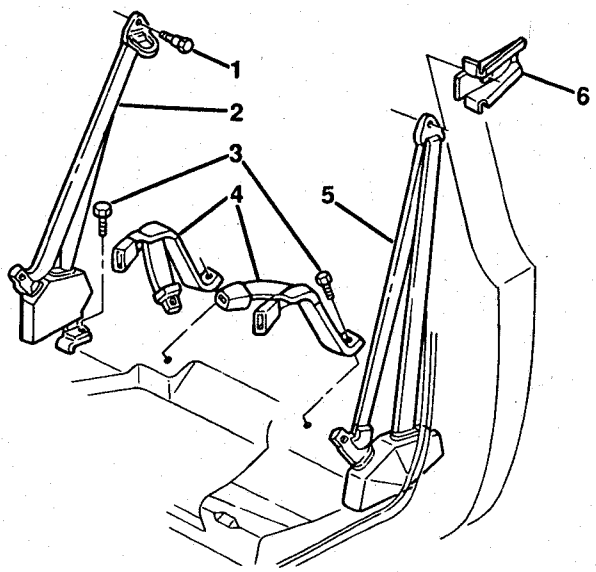

1985 - 86

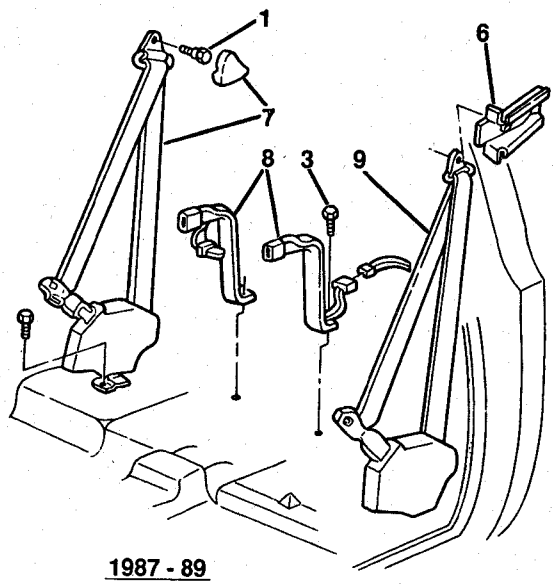

1987 - 89

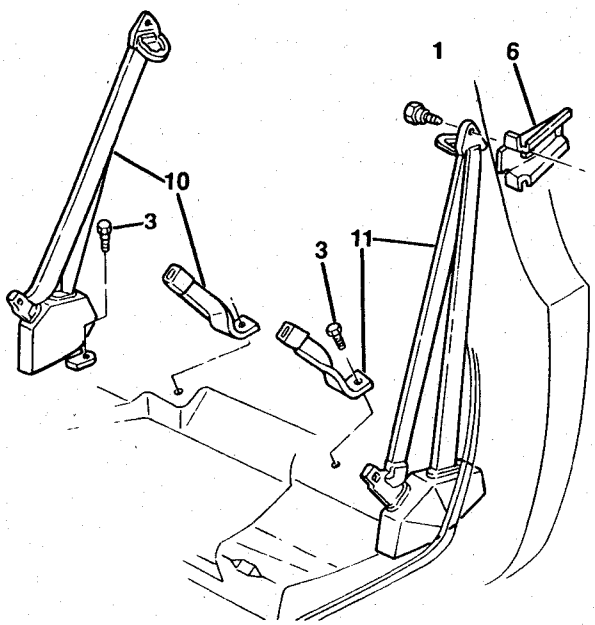

1988 - 89
W/BUCKET SEATS (6K8)

TR16-305

© 1990 GENERAL MOTORS SERVICE PARTS OPERATIONS—LIGHT TRUCK 52R

1987-1989 RV(03) SEAT BELTS

1.	16.714	**BOLT**, HEX W/SHOULDER (.50X13X1.42, ZP)	342221
2.	16.714	**BELT**, SEAT-RH (BLUE-23I)(1985-86)	14079054
	16.714	**BELT**, SEAT-RH (LT SADDLE-62I)(1985-86)	14079072
	16.714	**BELT**, SEAT-RH (DK MAPLE-77I)(1985-86)	14079070
	16.714	**BELT**, SEAT-RH (CHARCOAL-18I)(1985-86)	14079066
	16.714	**BELT**, SEAT-RH (BRONZE-76I)(1985-86)	14079058
3.	16.714	**BOLT**, HEX (M12X1.75X35, CAD)	471083
4.	16.714	**BELT**, SEAT CENTER (BLUE-23I)(1985-86)	14079055
	16.714	**BELT**, SEAT CENTER (LT SADDLE-62I)(1985-86)	14079073
	16.714	**BELT**, SEAT CENTER (DK MAPLE-77I)(1985-86)	14079068
	16.714	**BELT**, SEAT CENTER (CHARCOAL-18I)(1985-86)	14079067
	16.714	**BELT**, SEAT CENTER (BRONZE-76I)(1985-86)	14079056
5.	16.714	**BELT**, SEAT-LH (BLUE-23I)(1985-86)	14079053
	16.714	**BELT**, SEAT-LH (LT SADDLE-62I)(1985-86)	14079071
	16.714	**BELT**, SEAT-LH (DK MAPLE-77I)(1985-86)	14079069
	16.714	**BELT**, SEAT-LH (CHARCOAL-18I)(1985-86)	14079065
	16.714	**BELT**, SEAT-LH (BRONZE-76I)(1985-86)	14079057
6.	16.714	**PLATE**, SEAT BELT UPPER ANCHOR	365995
7.	16.714	**BELT**, SEAT-RH (BLUE-23I)(1987-88)	15583470
	16.714	**BELT**, SEAT-RH (BLUE-24I)(1989)	15617936
	16.714	**BELT**, SEAT-RH (LT SADDLE-62I)(1987)	15583478
	16.714	**BELT**, SEAT-RH (DK MAPLE-77I)(1987-88)	15583476
	16.714	**BELT**, SEAT-RH (DK MAPLE-77I)(1989)	15617934
	16.714	**BELT**, SEAT-RH (CHARCOAL-18I)(1987-89)	15583474
	16.714	**BELT**, SEAT-RH (BRONZE-76I)(1987)	15583472
	16.714	**BELT**, SEAT-RH (COGNAC-60I)(1988-89)	15617935
8.	16.714	**BELT**, SEAT CENTER (BLUE-23I)(1987-88)	15583479
	16.714	**BELT**, SEAT CENTER (BLUE-24I)(1989)	15615807
	16.714	**BELT**, SEAT CENTER (LT SADDLE-62I)(1987)	15583483
	16.714	**BELT**, SEAT CENTER (DK MAPLE-77I)(1987-89)	15583482
	16.714	**BELT**, SEAT CENTER (CHARCOAL-18I)(1987-89)	15583481
	16.714	**BELT**, SEAT CENTER (BRONZE-76I)(1987)	15583480
	16.714	**BELT**, SEAT CENTER (COGNAC-60I)(1988-89)	15578398
9.	16.714	**BELT**, SEAT-LH (BLUE-23I)(1987-88)	15583469
	16.714	**BELT**, SEAT-LH (BLUE-24I)(1989)	15615805
	16.714	**BELT**, SEAT-LH (LT SADDLE-62I)(1987)	15583477
	16.714	**BELT**, SEAT-LH (DK MAPLE-77I)(1987-89)	15583475
	16.714	**BELT**, SEAT-LH (CHARCOAL-18I)(1987-89)	15583473
	16.714	**BELT**, SEAT-LH (BRONZE-76I)(1987)	15583471
	16.714	**BELT**, SEAT-LH (COGNAC-60I)(1988-89)	15578403
10.	16.714	**BELT**, P/SEAT (COGNAC-60I)(1988-89)	15577694
11.	16.714	**BELT**, D/SEAT (COGNAC-60I)(1988-89)	15577693

© 1990 GENERAL MOTORS SERVICE PARTS OPERATIONS—LIGHT TRUCK 52R

TR16-306
012390

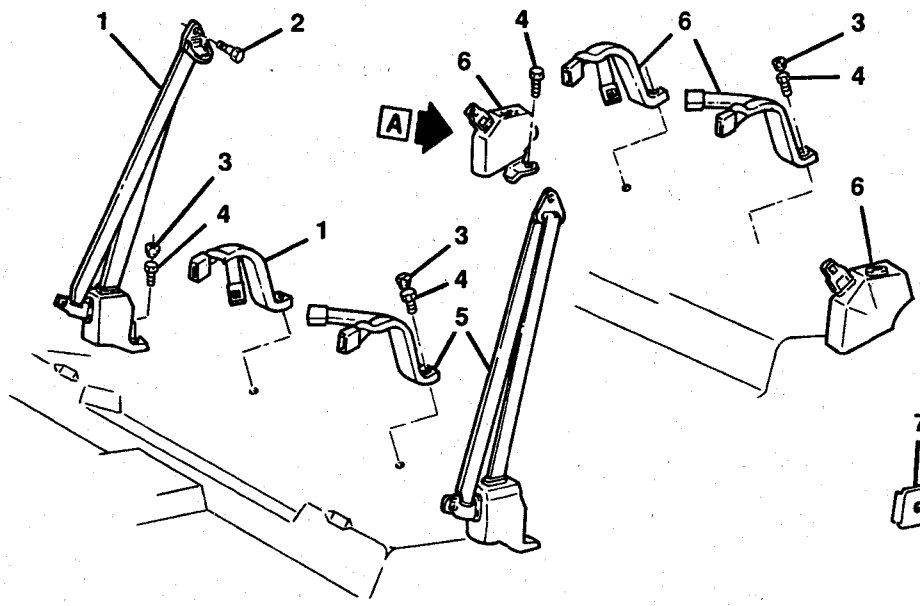

(1985-86)

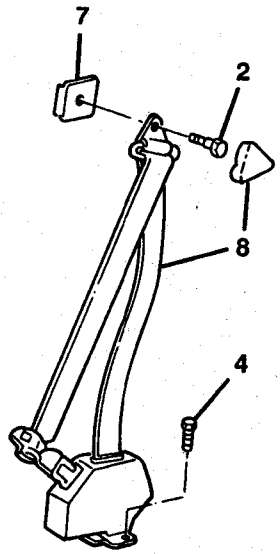

VIEW A
(1987-89)(W/AK9)

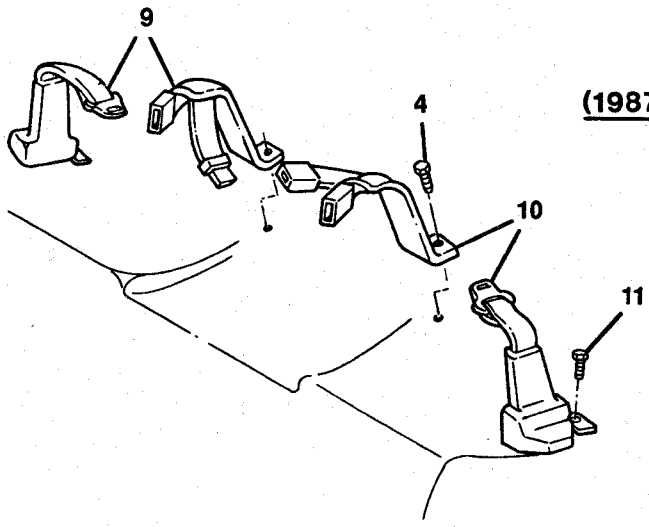

A53 (REAR SEAT)
(1987-89)

TR16-306

© 1990 GENERAL MOTORS SERVICE PARTS OPERATIONS—LIGHT TRUCK 52R

1987-1989 RV(43) SEAT BELTS

1.	16.714	**BELT**, SEAT-RH (BLUE-23I)(1985-86)	14067466
	16.714	**BELT**, SEAT-RH (BLUE-23I)(1987-88)	15583510
	16.714	**BELT**, SEAT-RH (BLUE-23I)(1989)	15615800
	16.714	**BELT**, SEAT-RH (DK MAPLE-77I)(1985-86)	14079022
	16.714	**BELT**, SEAT-RH (DK MAPLE-77I)(1987-89)	15583512
	16.714	**BELT**, SEAT-RH (LT SADDLE-62I)(1985-86)	14079024
	16.714	**BELT**, SEAT-RH (LT SADDLE-62I)(1987)	15583514
2.	16.714	**BOLT**, HEX W/SHOULDER (.50X13X1.42, ZP)	342221
3.	16.714	**PLUG**, SEAT BELT BOLT ACCESS HOLE(*1)	20114858
4.	16.714	**BOLT**, HEX (12X1.75X35, CAD)	471083
5.	16.714	**BELT**, SEAT-LH (BLUE-23I)(1985-86)	14067465
	16.714	**BELT**, SEAT-LH (BLUE-23I)(1987-88)	15583509
	16.714	**BELT**, SEAT-LH (BLUE-23I)(1989)	15615799
	16.714	**BELT**, SEAT-LH (DK MAPLE-77I)(1985-86)	14079021
	16.714	**BELT**, SEAT-LH (DK MAPLE-77I)(1987-89)	15583511
	16.714	**BELT**, SEAT-LH (LT SADDLE-62I)(1985-86)	14079023
	16.714	**BELT**, SEAT-LH (LT SADDLE-62I)(1987)	15583513
6.	16.714	**BELT**, SEAT REAR (BLUE-23I)(1985-86)	14029937
	16.714	**BELT**, SEAT REAR (DK MAPLE-77I)(1985-86)	14079051
	16.714	**BELT**, SEAT REAR (LT SADDLE-62I)(1985-86)	14079052
7.	16.714	**PLATE**, SEAT BELT UPPER ANCHOR	362435
8.	16.714	**BELT**, REAR SEAT-LH (BLUE-23I)(1987-88)	15575763
	16.714	**BELT**, REAR SEAT-LH (BLUE-23I)(1989)	15618148
	16.714	**BELT**, REAR SEAT-RH (BLUE-23I)(1987-88)	15575764
	16.714	**BELT**, REAR SEAT-RH (BLUE-24I)(1989)	15618149
	16.714	**BELT**, REAR SEAT-LH (MAPLE-77I)(1988-89)	15618134
	16.714	**BELT**, REAR SEAT-RH (MAPLE-77I)(1988-89)	15578428
	16.714	**BELT**, REAR SEAT-LH (LT SADDLE-62I)(1987)	15575771
	16.714	**BELT**, REAR SEAT-RH (LT SADDLE-62I)(1987)	15575772
	16.714	**BELT**, REAR SEAT-LH (COGNAC-60I)(1988-89)	15578431
	16.714	**BELT**, REAR SEAT-RH (COGNAC-60I)(1988-89)	15578432
9.	16.714	**BELT**, REAR SEAT-RH (DK MAPLE-77I)(1987-89)	15575768
	16.714	**BELT**, REAR SEAT-RH (COGNAC-60I)(1988-89)	15579146
10.	16.714	**BELT**, REAR SEAT-LH (DK MAPLE-77I)(1987-89)	15575767
	16.714	**BELT**, REAR SEAT-LH (COGNAC-60I)(1988-89)	15579147
11.	16.714	**BOLT**, HEX (M8X1.25X52, 4037 CAD)	15549274

NOTE 1: PRIME AND PAINT TO MATCH.

© 1990 GENERAL MOTORS SERVICE PARTS OPERATIONS—LIGHT TRUCK 52R

TR16-302
072690

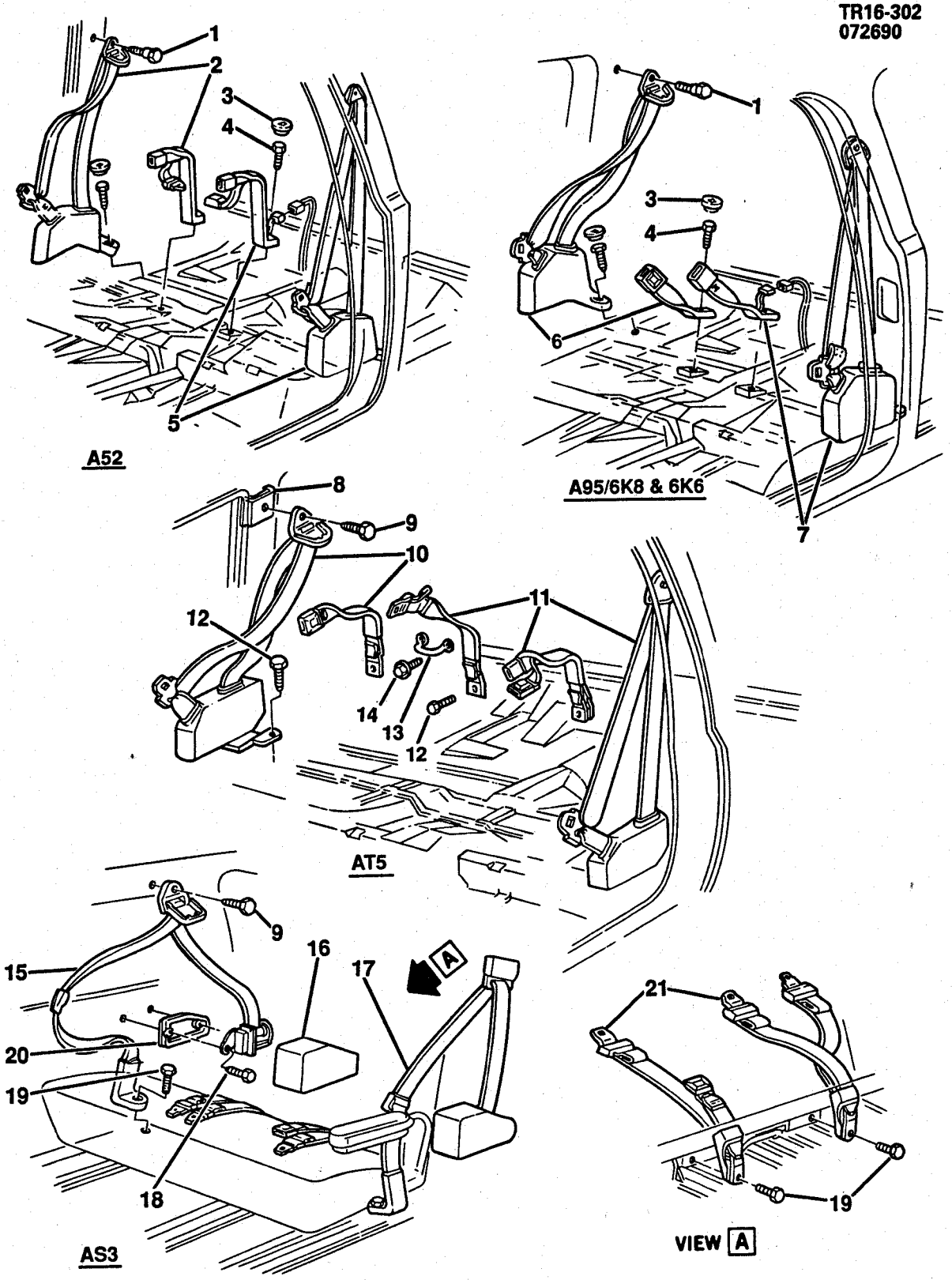

TR16-302

© 1990 GENERAL MOTORS SERVICE PARTS OPERATIONS—LIGHT TRUCK 52R

1990 RV(06) SEAT BELTS & RELATED PARTS

1.	14.875	**BOLT**, F/SEAT BELT	342221
2.	16.714	**BELT**, F/SEAT-RH (W/A52)(GRAY-82I)	15618127
	16.714	**BELT**, F/SEAT-RH (W/A52)(COGNAC-60I)	15635838
	16.714	**BELT**, F/SEAT-RH (W/A52)(BLUE-24I)	15618129
	16.714	**BELT**, F/SEAT-RH (W/A52)(RED-47I)	15633108
3.	16.714	**PLUG**, ST BELT BOLT ACC HOLE(14.875)(*1)	20114858
4.	16.714	**BOLT**, F/SEAT BELT	471083
5.	16.714	**BELT**, F/SEAT-LH (W/A52)(GRAY-82I)	15583515
	16.714	**BELT**, F/SEAT-LH (W/A52)(COGNAC-60I)	15578401
	16.714	**BELT**, F/SEAT-LH (W/A52)(BLUE-24I)	15615799
	16.714	**BELT**, F/SEAT-LH (W/A52)(RED-47I)	15633109
6.	16.714	**BELT**, F/SEAT-RH (W/A95)(GRAY-82I)	15617938
	16.714	**BELT**, F/SEAT-RH (W/A95,6K8)(COGNAC-60I)	15617939
	16.714	**BELT**, F/SEAT-RH (W/A95,6K8)(BLUE-24I)	15635814
	16.714	**BELT**, F/SEAT-RH (W/A95)(RED-47I)	15633106
7.	16.714	**BELT**, F/SEAT-LH (W/A95)(GRAY-82I)	15583507
	16.714	**BELT**, F/SEAT-LH (W/A95,6K6,6K8)(COGNAC-60I)	15578399
	16.714	**BELT**, F/SEAT-LH (W/A95,6K6,6K8)(BLUE-24I)	15615797
	16.714	**BELT**, F/SEAT-LH (W/A95)(RED-47I)	15635815
8.	16.714	**PLATE**, SEAT BELT UPR ANC	15602376
9.	16.714	**BOLT**, SEAT BELT UPR ANC PLT	3930638
10.	16.714	**BELT**, INTER SEAT-RH (W/AT5)(GRAY-82I)	15618131
	16.714	**BELT**, INTER SEAT-RH (W/AT5)(COGNAC-60I)	15635854
	16.714	**BELT**, INTER SEAT-RH (W/AT5)(BLUE-24I)	15635848
	16.714	**BELT**, INTER SEAT-RH (W/AT5)(RED-47I)	15635852
11.	16.714	**BELT**, INTER SEAT-LH (W/AT5)(GRAY-82)	15633303
	16.714	**BELT**, INTER SEAT-LH (W/AT5)(COGNAC-60I)	15633304
	16.714	**BELT**, INTER SEAT-LH (W/AT5)(BLUE-42I)	15633301
	16.714	**BELT**, INTER SEAT-LH (W/AT5)(RED-47I)	15633305
12.	16.714	**BOLT**, ST BELT FLR (14.875)	1712156
13.	16.714	**GUIDE**, CTR SEAT BELT (W/AT5)	14036888
14.	8.977	**BOLT**, SEMS HEX W/FL WA (M6.3X1.81X20)	12337828
15.	16.714	**BELT**, R/SEAT-RH (W/AS3)(GRAY-82I)	15617764
	16.714	**BELT**, R/SEAT-RH (W/AS3)(COGNAC-60I)	15617765
	16.714	**BELT**, R/SEAT-RH (W/AS3)(BLUE-24I)	15617762
	16.714	**BELT**, R/SEAT-RH (W/AS3)(RED-47I)	15633112
16.	16.714	**COVER**, R/SEAT (W/YE9)(GRAY-82I)	15610557
	16.714	**COVER**, R/SEAT (W/YE9)(COGNAC-60I)	15610556
	16.714	**COVER**, R/SEAT (W/YE9)(BLUE-24I)	15610555
	16.714	**COVER**, R/SEAT (W/YE9)(RED-47I)	15624082
17.	16.714	**BELT**, R/SEAT-LH (W/AS3)(GRAY-82I)	15617763
	16.714	**BELT**, R/SEAT-LH (W/AS3)(COGNAC-60I)	15617766
	16.714	**BELT**, R/SEAT-LH (W/AS3)(BLUE-24I)	15617761
	16.714	**BELT**, R/SEAT-LH (W/AS3)(RED-47I)	15633111
18.	16.714	**BOLT**, R/SEAT BELT(W/AS3)	3929453
19.	16.714	**BOLT**, R/SEAT BELT (W/AS3)	3954730
20.	16.714	**SEAL**, R/SEAT SHLDR BELT RETR OPG CVR-LH(EXC YE9)	15629613
	16.714	**SEAL**, R/SEAT SHLDR BELT RETR OPG CVR-RH (EXC YE9)	15629614
21.	16.714	**BELT**, R/SEAT CTR (W/AS3)(GRAY-82I)	15617038
	16.714	**BELT**, R/SEAT CTR (W/AS3)(COGNAC-60I)	15617037
	16.714	**BELT**, R/SEAT CTR (W/AS3)(BLUE-24I)	15617039
	16.714	**BELT**, R/SEAT CTR (W/AS3)(RED-47I)	15633155

NOTE 1: PAINT TO MATCH.

RPO DEFINITIONS
AS3 - SEAT RR, SUBURBAN
AT5 - SEAT RR, CTR, FLDG, SUBURBAN
A52 - SEAT, FRT BENCH
A95 - SEAT, FRT BUCKET, HIGH BACK, PASS & DRIVER RECL
6K6 - SEAT, BUCKET TYPE, DRIVER
6K8 - SEAT, BUCKET TYPE, DRIVER & PASS

© 1990 GENERAL MOTORS SERVICE PARTS OPERATIONS—LIGHT TRUCK 52R

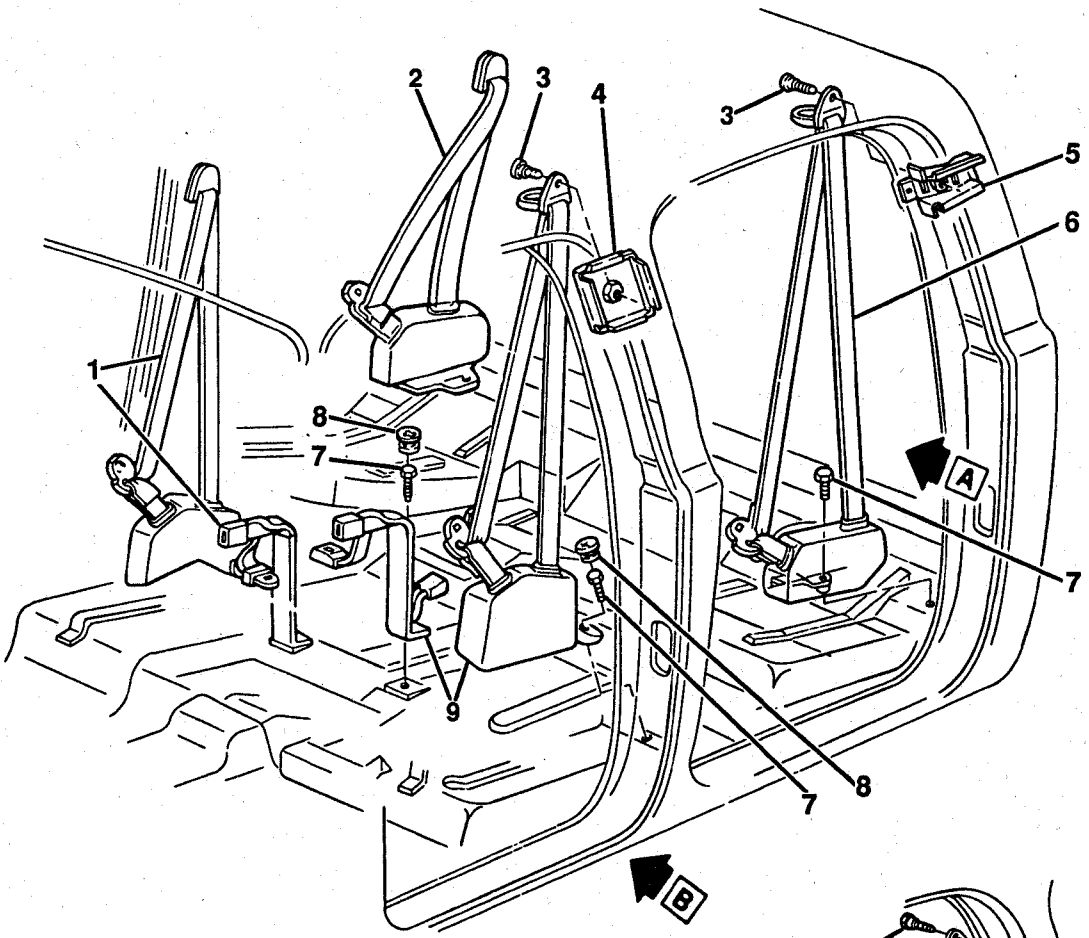

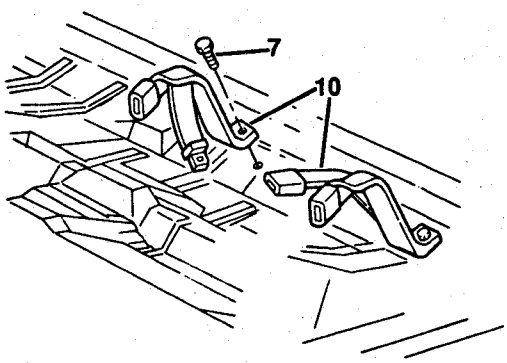

VIEW A
AS3

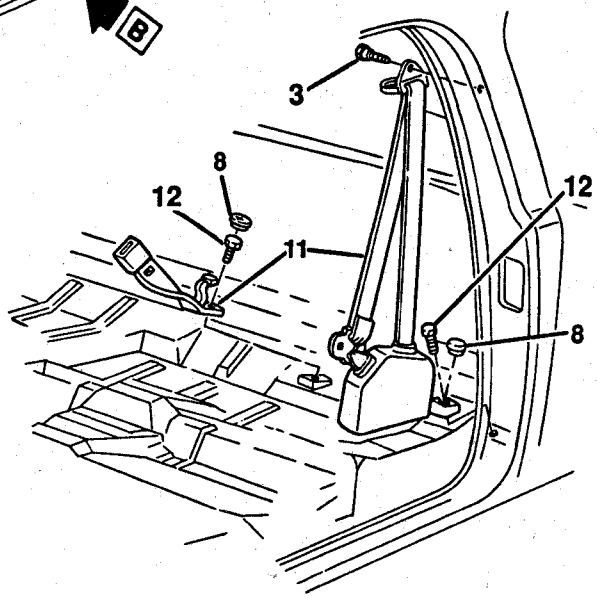

VIEW B
6K6 / 6K8

TR16-303

© 1990 GENERAL MOTORS SERVICE PARTS OPERATIONS—LIGHT TRUCK 52R

1990 RV(43) SEAT BELTS & RELATED PARTS

1.	16.714	**BELT**, F/SEAT-RH (COGNAC-60I)	15618128
	16.714	**BELT**, F/SEAT-RH (RED-47I)	15633108
	16.714	**BELT**, F/SEAT-RH (BLUE-24I)	15618129
2.	16.714	**BELT**, R/SEAT-RH (COGNAC-60I)	15635876
	16.714	**BELT**, R/SEAT-RH (RED-47I)	15634452
	16.714	**BELT**, R/SEAT-RH (BLUE-24I)	15635870
3.	14.875	**BOLT**, SEAT BELT	342221
4.	16.714	**PLATE**, SEAT BELT UPR ANC	15602376
5.	16.714	**PLATE**, SEAT BELT UPR ANC	365995
6.	16.714	**BELT**, R/SEAT-LH (COGNAC-60I)	15635877
	16.714	**BELT**, R/SEAT-LH (RED-47I)	15634451
	16.714	**BELT**, R/SEAT-LH (BLUE-24I)	15635871
7.	14.875	**BOLT**, SEAT BELT	1712156
8.	16.714	**PLUG**, SEAT BELT BOLT ACC HOLE (14.875)(*1)	20114858
9.	16.714	**BELT**, F/SEAT-LH (COGNAC-60I)	15578401
	16.714	**BELT**, F/SEAT-LH (RED-47I)	15635835
	16.714	**BELT**, F/SEAT-LH (BLUE-24I)	15615799
10.	16.714	**BELT**, REAR CENTER (COGNAC-60I)	15635878
	16.714	**BELT**, REAR CENTER (RED-47I)	15635875
	16.714	**BELT**, REAR CENTER (BLUE-24I)	15635872
11.	16.714	**BELT**, F/SEAT-LH (W/6K6/6K8)(COGNAC-60I)	15578399
	N.S.	**BELT**, F/SEAT-RH (W/6K6/6K8)(COGNAC-60I)	
	16.714	**BELT**, F/SEAT-LH (W/6K6/6K8)(BLUE-24I)	15635813
	14.875	**BELT**, F/SEAT-RH (W/A95/6K8)(BLUE-24I)	15635814
12.	16.714	**BOLT**, F/SEAT BELT	471083

NOTE 1: PAINT TO MATCH.

RPO DEFINITIONS
AS3-SEAT/REAR.
6K6-SEAT/BUCKET TYPE, DRIVER
6K8-SEAT/BUCKET TYPE DRIVER & PASSENGER

© 1990 GENERAL MOTORS SERVICE PARTS OPERATIONS—LIGHT TRUCK 52R

TR16-303
080190

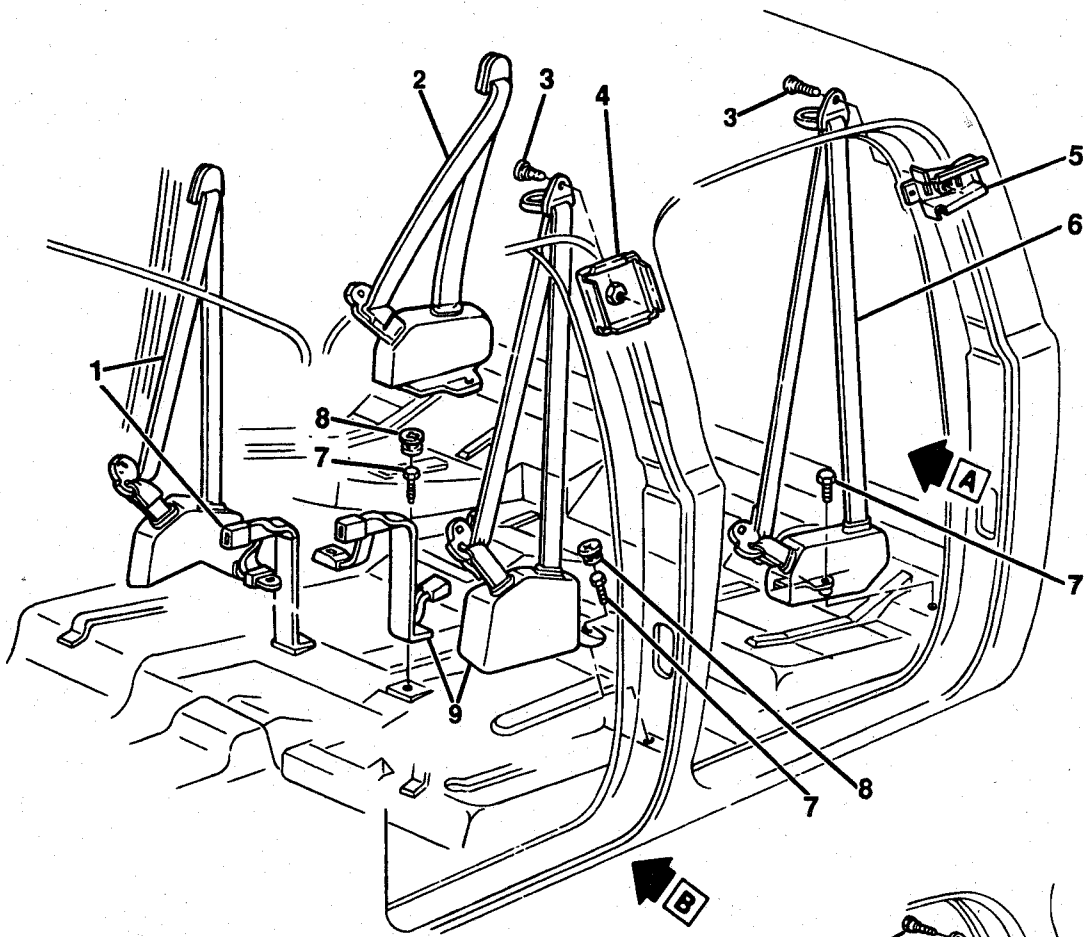

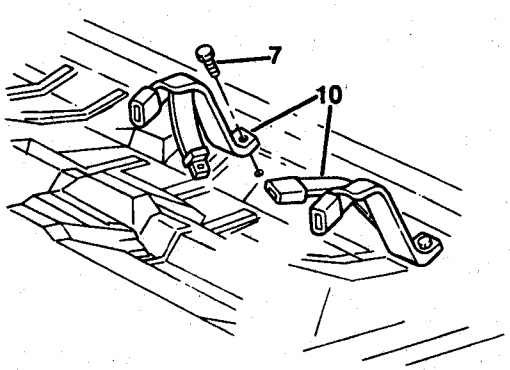

VIEW A
AS3

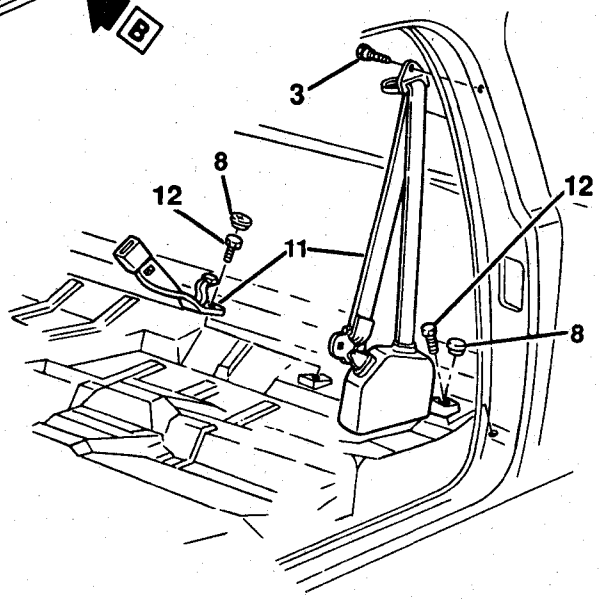

VIEW B
6K6 / 6K8

TR16-3035

© 1990 GENERAL MOTORS SERVICE PARTS OPERATIONS—LIGHT TRUCK 52R

1991 RV (43) SEAT BELTS & RELATED PARTS

1.	16.714	BELT, F/SEAT-RH (COGNAC-60I)	15618128
	16.714	BELT, F/SEAT-RH (RED-47I)	15635835
	16.714	BELT, F/SEAT-RH (BLUE-24I)	15635832
2.	16.714	BELT, R/SEAT-RH (COGNAC-60I)	15635876
	16.714	BELT, R/SEAT-RH (RED-47I)	15635874
	16.714	BELT, R/SEAT-RH (BLUE-24I)	15635870
3.	14.875	BOLT, SEAT BELT	342221
4.	16.714	PLATE, SEAT BELT UPR ANC	15602376
5.	16.714	PLATE, SEAT BELT UPR ANC	365995
6.	16.714	BELT, R/SEAT-LH (COGNAC-60I)	15635877
	16.714	BELT, R/SEAT-LH (RED-47I)	15635873
	16.714	BELT, R/SEAT-LH (BLUE-24I)	15635871
7.	14.875	BOLT, SEAT BELT	1712156
8.	16.714	PLUG, SEAT BELT BOLT ACC HOLE (14.875)(*1)	20114858
9.	16.714	BELT, F/SEAT-LH (COGNAC-60I)	15635839
	16.714	BELT, F/SEAT-LH (RED-47I)	15635835
	16.714	BELT, F/SEAT-LH (BLUE-24I)	15635833
10.	16.714	BELT, REAR CENTER (COGNAC-60I)	15635878
	16.714	BELT, REAR CENTER (RED-47I)	15635875
	16.714	BELT, REAR CENTER (BLUE-24I)	15635872
11.	16.714	BELT, F/SEAT-LH (W/6K6/6K8)(COGNAC-60I)	15635817
	N.S.	BELT, F/SEAT-RH (W/6K6/6K8)(COGNAC-60I)	
	16.714	BELT, F/SEAT-LH (W/6K6/6K8)(BLUE-24I)	15635813
	14.875	BELT, F/SEAT-RH (W/A95/6K8)(BLUE-24I)	15635814
12.	16.714	BOLT, F/SEAT BELT	471083

NOTE 1: PAINT TO MATCH.

RPO DEFINITIONS
AS3-SEAT/REAR.
6K6-SEAT/BUCKET TYPE, DRIVER
6K8-SEAT/BUCKET TYPE DRIVER & PASSENGER

© 1990 GENERAL MOTORS SERVICE PARTS OPERATIONS—LIGHT TRUCK 52R

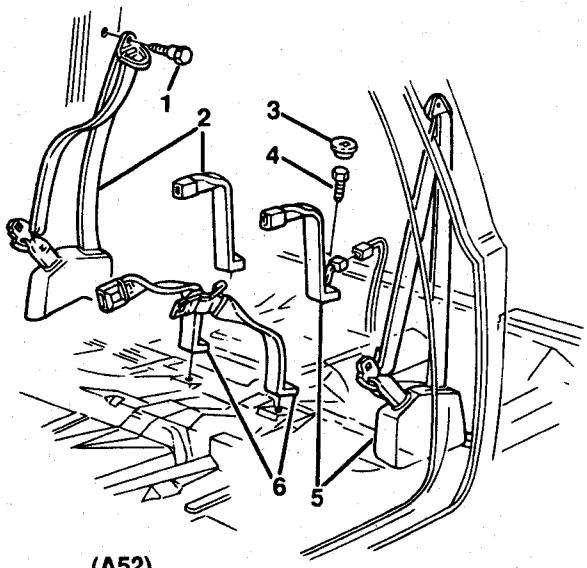

(A52)

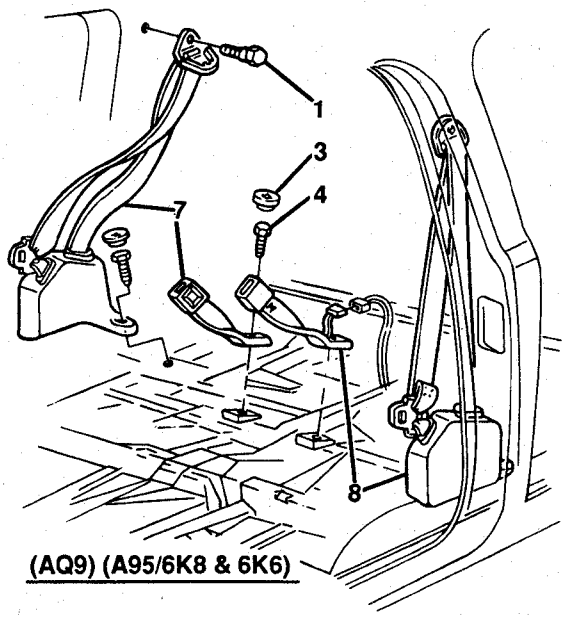

(AQ9) (A95/6K8 & 6K6)

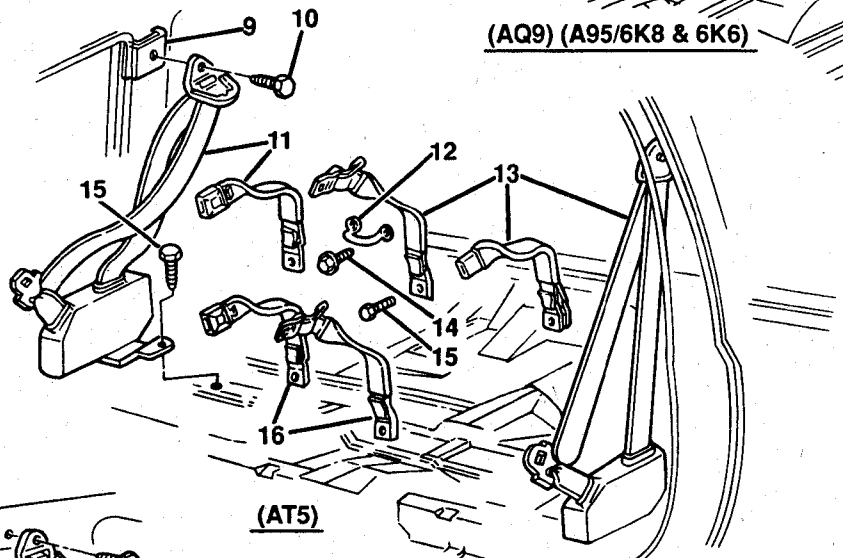

(AT5)

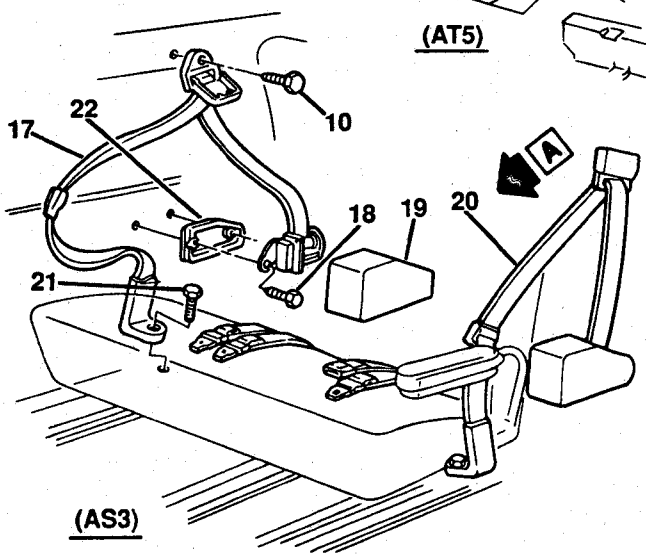

(AS3)

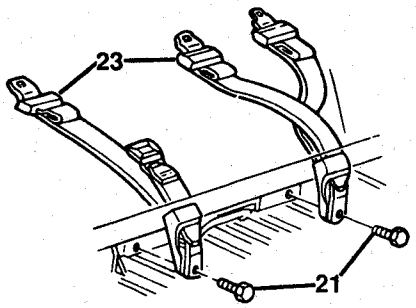

VIEW A

TR16-307

© 1990 GENERAL MOTORS SERVICE PARTS OPERATIONS—LIGHT TRUCK 52R

1991 RV(06) SEAT BELTS & RELATED PARTS

1.	14.875	**BOLT**, F/SEAT BELT	342221
2.	16.714	**BELT**, F/SEAT-RH (W/A52)(GRAY-13I)	15635830
	16.714	**BELT**, F/SEAT-RH (W/A52)(COGNAC-60I)	15635838
	16.714	**BELT**, F/SEAT-RH (W/A52)(BLUE-24I)	15635832
	16.714	**BELT**, F/SEAT-RH (W/A52)(RED-47I)	15635836
3.	16.714	**PLUG**, ST BELT BOLT ACC HOLE(14.875)(*1)	20114858
4.	16.714	**BOLT**, F/SEAT BELT	471083
5.	16.714	**BELT**, F/SEAT-LH (W/A52)(GRAY-13I)	15635829
	16.714	**BELT**, F/SEAT-LH (W/A52)(COGNAC-60I)	15635839
	16.714	**BELT**, F/SEAT-LH (W/A52)(BLUE-24I)	15635833
	16.714	**BELT**, F/SEAT-LH (W/A52)(RED-47I)	15635835
6.	16.714	**BELT**,F/SEAT CTR((W/A95)(GRAY-13I))	15635831
	16.714	**BELT**,F/SEAT CTR((W/A52)(BLUE-24I))	15635834
	16.714	**BELT**,F/SEAT((W/A52)(RED-47I))	15635837
	16.714	**BELT**,F/SEAT((W/A52)(COGNAC-60I))	15635840
7.	16.714	**BELT**, F/SEAT-RH (W/A95)(GRAY-13I)	15635812
	16.714	**BELT**, F/SEAT-RH (W/A95,6K8)(COGNAC-60I)	15635818
	16.714	**BELT**, F/SEAT-RH (W/A95,6K8)(BLUE-24I)	15635814
	16.714	**BELT**, F/SEAT-RH (W/A95)(RED-47I)	15635816
8.	16.714	**BELT**, F/SEAT-LH (W/A95)(GRAY-13I)	15635811
	16.714	**BELT**, F/SEAT-LH (W/A95,6K6,6K8)(COGNAC-60I)	15635817
	16.714	**BELT**, F/SEAT-LH (W/A95,6K6,6K8)(BLUE-24I)	15635813
	16.714	**BELT**, F/SEAT-LH (W/A95)(RED-47I)	15635815
9.	16.714	**PLATE**, SEAT BELT UPR ANC	15602376
10.	16.714	**BOLT**, SEAT BELT UPR ANC PLT	3930638
11.	16.714	**BELT**, INTER SEAT-RH (W/AT5)(GRAY-13I)	15635846
	16.714	**BELT**, INTER SEAT-RH (W/AT5)(COGNAC-60I)	15635854
	16.714	**BELT**, INTER SEAT-RH (W/AT5)(BLUE-24I)	15635848
	16.714	**BELT**, INTER SEAT-RH (W/AT5)(RED-47I)	15635852
12.	16.714	**GUIDE**, CTR SEAT BELT (W/AT5)	14036888
13.	16.714	**BELT**, INTER SEAT-LH (W/AT5)(GRAY-13I)	15635845
	16.714	**BELT**, INTER SEAT-LH (W/AT5)(COGNAC-60I)	15635855
	16.714	**BELT**, INTER SEAT-LH (W/AT5)(BLUE-42I)	15635849
	16.714	**BELT**, INTER SEAT-LH (W/AT5)(RED-47I)	15635851
14.	8.977	**BOLT**, SEMS HEX W/FL WA (M6.3X1.81X20)	12337828
15.	16.714	**BOLT**, ST BELT FLR (14.875)	1712156
16.	16.714	**BELT**,INTER ST((W/AT5)(GRAY-13I))	15635847
	16.714	**BELT**,INTER ST((W/AT5)(BLUE-24I))	15635850
	16.714	**BELT**,INTER ST((W/AT5)(RED-47I))	15635853
	16.714	**BELT**,INTER ST((W/AT5)(COGNAC-60I)	15635856
17.	16.714	**BELT**, R/SEAT-RH (W/AS3)(GRAY-13I)	15635622
	16.714	**BELT**, R/SEAT-RH (W/AS3)(COGNAC-60I)	15617765
	16.714	**BELT**, R/SEAT-RH (W/AS3)(BLUE-24I)	15617762
	16.714	**BELT**, R/SEAT-RH (W/AS3)(RED-47I)	15633112
18.	16.714	**BOLT**, R/SEAT BELT(W/AS3)	3929453
19.	16.714	**COVER**, R/SEAT (W/YE9)(GRAY-13I)	15641429
	16.714	**COVER**, R/SEAT (W/YE9)(COGNAC-60I)	15610556
	16.714	**COVER**, R/SEAT (W/YE9)(BLUE-24I)	15610555
	16.714	**COVER**, R/SEAT (W/YE9)(RED-47I)	15624082
20.	16.714	**BELT**, R/SEAT-LH (W/AS3)(GRAY-13I)	15635621
	16.714	**BELT**, R/SEAT-LH (W/AS3)(COGNAC-60I)	15617766
	16.714	**BELT**, R/SEAT-LH (W/AS3)(BLUE-24I)	15617761
	16.714	**BELT**, R/SEAT-LH (W/AS3)(RED-47I)	15633111
21.	16.714	**BOLT**, R/SEAT BELT (W/AS3)	3954730
22.	16.714	**SEAL**, R/SEAT SHLDR BELT RETR OPG CVR-LH(EXC YE9)	15629613
	16.714	**SEAL**, R/SEAT SHLDR BELT RETR OPG CVR-RH (EXC YE9)	15629614
23.	16.714	**BELT**, R/SEAT CTR (W/AS3)(GRAY-13I)	15635623
	16.714	**BELT**, R/SEAT CTR (W/AS3)(COGNAC-60I)	15617037
	16.714	**BELT**, R/SEAT CTR (W/AS3)(BLUE-24I)	15617039
	16.714	**BELT**, R/SEAT CTR (W/AS3)(RED-47I)	15633155

NOTE 1: PAINT TO MATCH.

RPO DEFINITIONS
AQ9-SEAT/FRT BUCKET, PASS,DRIVER, RECL.
AS3-SEAT/RR, SUBURBAN
AT5-SEAT/RR, CTR, FLDG, SUBURBAN
A52-SEAT/FRT BENCH
A95-SEAT/FRT BUCKET, HIGH BACK, PASS & DRIVER RECL
6K6-SEAT/BUCKET TYPE, DRIVER
6K8-SEAT/BUCKET TYPE, DRIVER & PASS

© 1990 GENERAL MOTORS SERVICE PARTS OPERATIONS—LIGHT TRUCK 52R

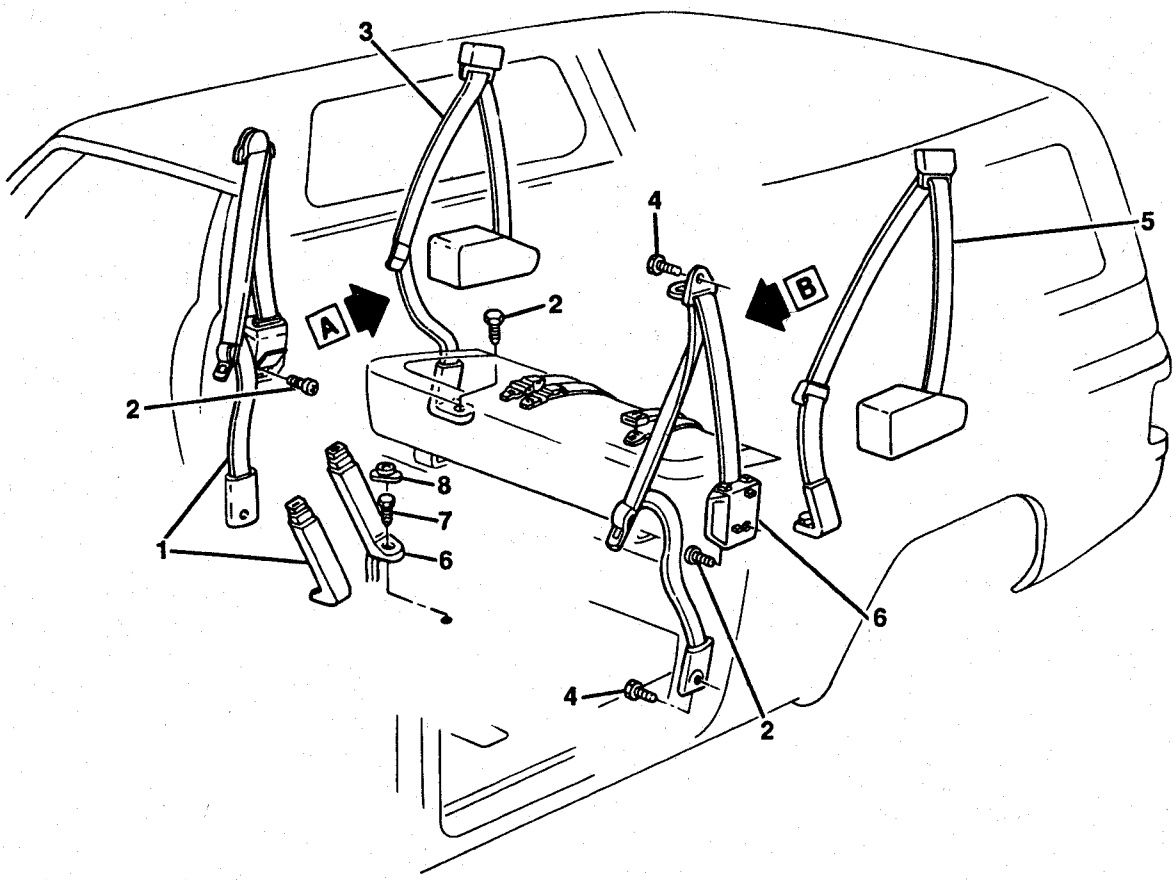

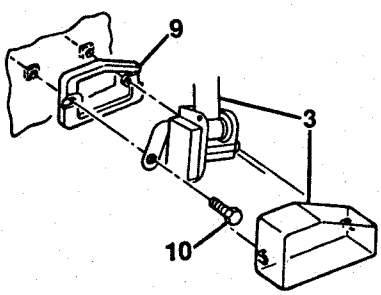

VIEW A

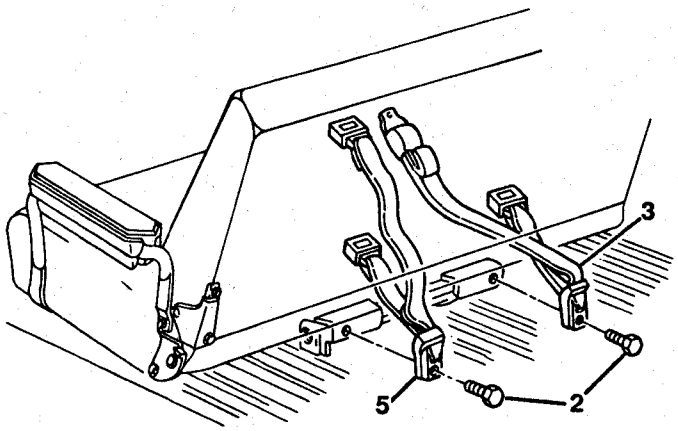

VIEW B

TR16-308

© 1990 GENERAL MOTORS SERVICE PARTS OPERATIONS—LIGHT TRUCK 52R

1991 V(16) SEAT BELTS

1.	16.714	**BELT** ,F/SEAT(-RH (GRAY-13I))	15636768
	16.714	**BELT** ,F/SEAT(-RH (BLUE-24I))	15636770
	16.714	**BELT** ,F/SEAT(-RH (RED-47I))	15636772
	16.714	**BELT** ,F/SEAT(-RH (COGNAC-60I))	15636774
2.	16.714	**BOLT** ,SEAT BELT(HEX HD LK (.5X13X1.38 ZP))	3954730
3.	16.714	**BELT** ,R/SEAT(-RH (GRAY-13I))	15635600
	16.714	**BELT** ,R/SEAT(-RH (BLUE-24I))	15636958
	16.714	**BELT** ,R/SEAT(-RH (RED-47I))	15636956
	16.714	**BELT** ,R/SEAT(-RH (COGNAC-60I))	15636954
4.	16.714	**BOLT** ,F/SEAT BELT	342221
5.	16.714	**BELT** ,R/SEAT(-LH (GRAY-13I))	15636959
	16.714	**BELT** ,R/SEAT(-LH (BLUE-24I))	15636957
	16.714	**BELT** ,R/SEAT(-LH (RED-47I))	15636955
	16.714	**BELT** ,R/SEAT(-LH (COGNAC-60I))	15636911
6.	16.714	**BELT** ,F/SEAT(-LH (GRAY-13I))	15636767
	16.714	**BELT** ,F/SEAT(-LH (BLUE-24I))	15636769
	16.714	**BELT** ,F/SEAT(-LH (RED-47I))	15636771
	16.714	**BELT** ,F/SEAT(-LH (COGNAC-60I))	15636773
7.	16.714	**BOLT** ,F/SEAT BELT	471083
8.	16.714	**PLUG** ,ST BELT BOLT ACC HOLE((PAINT AS REQD))	15560788
9.	16.714	**SEAL** ,R/SEAT SHLDR BELT RETR OPG CVR(-LH)	15629613
	16.714	**SEAL** ,R/SEAT SHLDR BELT RETR OPG CVR(-RH)	15629614
10.	16.714	**BOLT** ,SEAT BELT(HEX HD LK (.5X13X2.25 PC))	3929453

© 1990 GENERAL MOTORS SERVICE PARTS OPERATIONS—LIGHT TRUCK 52R

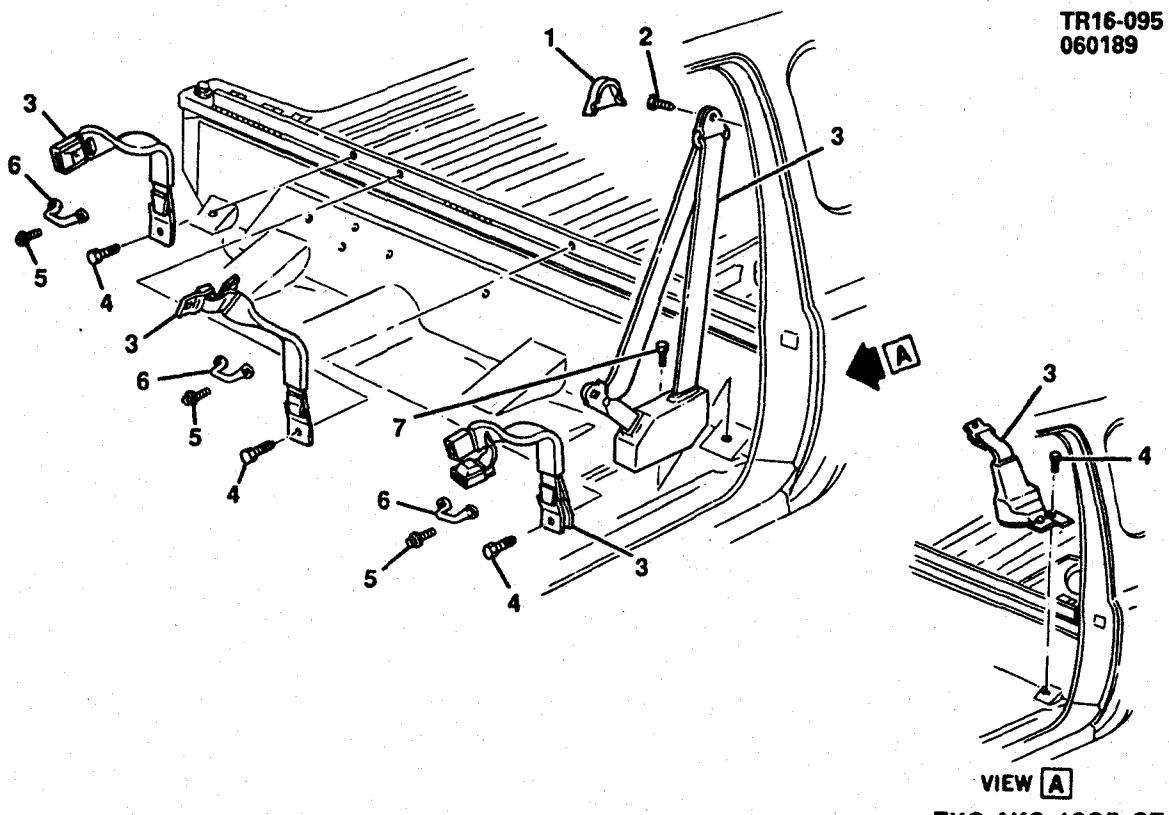

EXC AK9 1985-87

TR16-095

1987-1989 RV(06) SEAT BELTS-INTERMEDIATE SEAT (W/AT5)

1.	16.714	COVER , FRT SEAT SHLDR STRAP GUIDE (77MM)(*2)	1728332
2.	16.714	BOLT , INTER ST OTR RETR SHLDR BELT GDE	3930638
3.	16.714	BELT , INTER SEAT (BLUE-23I)-LH(*1)	16578407
	16.714	BELT , INTER SEAT (MAPLE-77I)-LH	15633302
4.	16.714	BOLT , INTER SEAT BELT (14.875)	1712156
5.	8.977	BOLT , SEMS HEX W/FL WA (M6.3X1.81X20)	22527475
6.	16.714	GUIDE , CTR ST BELT	14036888
7.	8.977	SCREW , PAN HD W/FIN WA (M4.2X1.41X13)	11509718

NOTE 1: FOR ADDITIONAL PART NUMBERS AND TRIM COMBINATIONS REFER TO APPLICABLE CATALOG GROUP OR CHART.
NOTE 2: PAINT TO MATCH.

RPO DEFINITIONS
AK9 - RESTRAINT SYSTEM, RR SEAT, SHLDR, RETR, 3 POINT
AT5 - SEAT RR, CTR, FLDG, SUBURBAN

© 1990 GENERAL MOTORS SERVICE PARTS OPERATIONS—LIGHT TRUCK 52R

NOTES

BLANK PAGE

TR16-121
071789

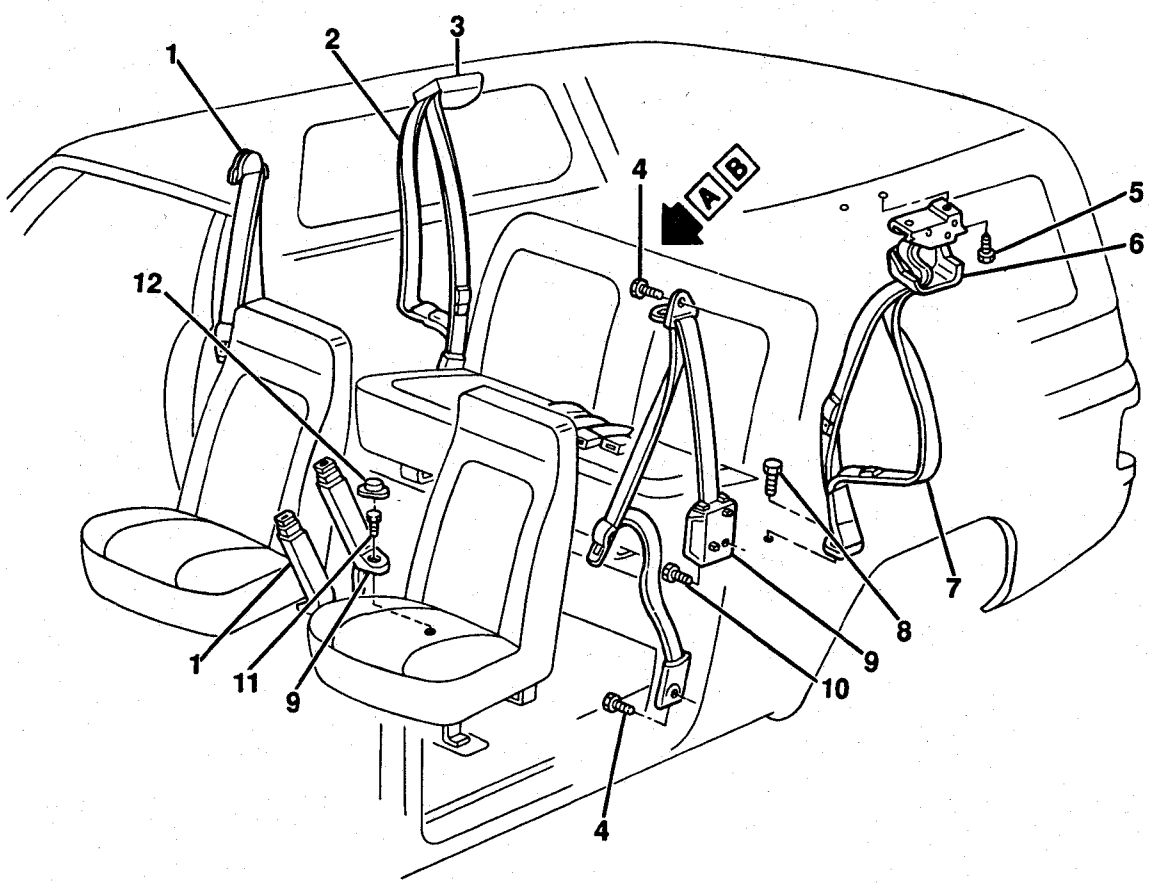

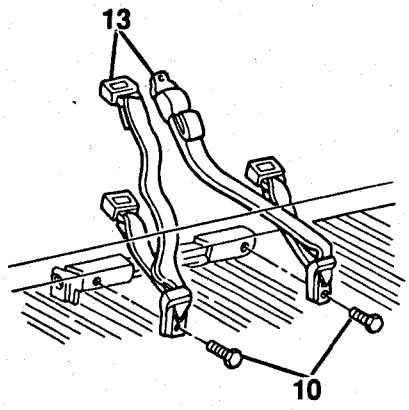

VIEW A
W/AK9

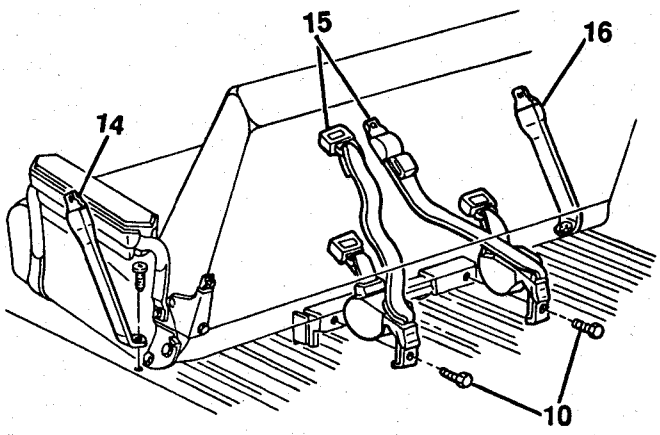

VIEW B
EXC AK9

TR16-121

© 1990 GENERAL MOTORS SERVICE PARTS OPERATIONS—LIGHT TRUCK 52R

1989-1990 V(16) SEAT BELTS-BENCH SEAT W/3 POINT SHOULDER RESTRAINT SYSTEM (AK9)

1.	16.714	**BELT**, F/SEAT-RH (GRAY-82I)	15617346
	16.714	**BELT**, F/SEAT-RH (COGNAC-60I)	15617348
	16.714	**BELT**, F/SEAT-RH (BLUE-24I)	15617350
	16.714	**BELT**, F/SEAT-RH (RED 47I)	15633104
2.	16.714	**BELT**, R/SEAT-RH (GRAY-82I)	15634172
	16.714	**BELT**, R/SEAT-RH (COGNAC-60I)	15634176
	16.714	**BELT**, R/SEAT-RH (BLUE-24I)	15634182
	16.714	**BELT**, R/SEAT-RH (RED-47I)	15634178
3.	16.714	**COVER**, R/SEAT SHLDR BELT RETR OPG-RH(*1)	15610148
4.	14.875	**BOLT**, F/SEAT BELT	342221
5.	9.171	**BOLT**, R/SEAT OTR RETAINER SI BELT	14081734
6.	16.714	**COVER**, R/SEAT SHLDR BELT RETR OPG-LH(*1)	15610147
7.	16.714	**BELT**, R/SEAT-LH (GRAY-82I)	15634171
	16.714	**BELT**, R/SEAT-LH (COGNAC-60I)	15634175
	16.714	**BELT**, R/SEAT-LH (BLUE-24I)	15634181
	16.714	**BELT**, R/SEAT-LH (RED-47I)	15634177
8.	16.714	**BOLT**, ST BELT FLR (14.875)	1712156
9.	16.714	**BELT**, F/SEAT-LH (GRAY-82I)	15617345
	16.714	**BELT**, F/SEAT-LH (COGNAC-60I)	15617347
	16.714	**BELT**, F/SEAT-LH (BLUE 24I)	15617349
	16.714	**BELT**, F/SEAT-LH (RED 47I)	15633105
10.	16.714	**BOLT**, R/SEAT BELT	3954730
11.	16.714	**BOLT**, F/SEAT BELT	471083
12.	16.714	**PLUG**, ST BELT BOLT ACC HOLE (14.875)(*1)	20114858
13.	16.714	**BELT**, R/SEAT CTR (GRAY-82I)	15634173
	16.714	**BELT**, R/SEAT CTR (COGNAC-60I)	15634174
	16.714	**BELT**, R/SEAT CTR (BLUE-24I)	15634180
	16.714	**BELT**, R/SEAT CTR (RED-47I)	15634179
14.	16.714	**BELT**, R/SEAT-LH (GRAY-82I)	14079039
	16.714	**BELT**, R/SEAT-LH (COGNAC-60I)	15578415
	16.714	**BELT**, R/SEAT-LH (BLUE-24I)	15615808
	16.714	**BELT**, R/SEAT-LH (RED-47I)	15634169
15.	16.714	**BELT**, R/SEAT (GRAY-82I)	15537435
	16.714	**BELT**, R/SEAT (COGNAC-60I)	15578419
	16.714	**BELT**, R/SEAT (BLUE-24I)	15615841
	16.714	**BELT**, R/SEAT (RED-47I)	15634168
16.	16.714	**BELT**, R/SEAT-RH (GRAY-82I)	14079040
	16.714	**BELT**, R/SEAT-RH (COGNAC-60I)	15578416
	16.714	**BELT**, R/SEAT-RH (BLUE-24I)	15615809
	16.714	**BELT**, R/SEAT-RH (RED-47I)	15634170

NOTE 1: PAINT TO MATCH.

© 1990 GENERAL MOTORS SERVICE PARTS OPERATIONS—LIGHT TRUCK 52R

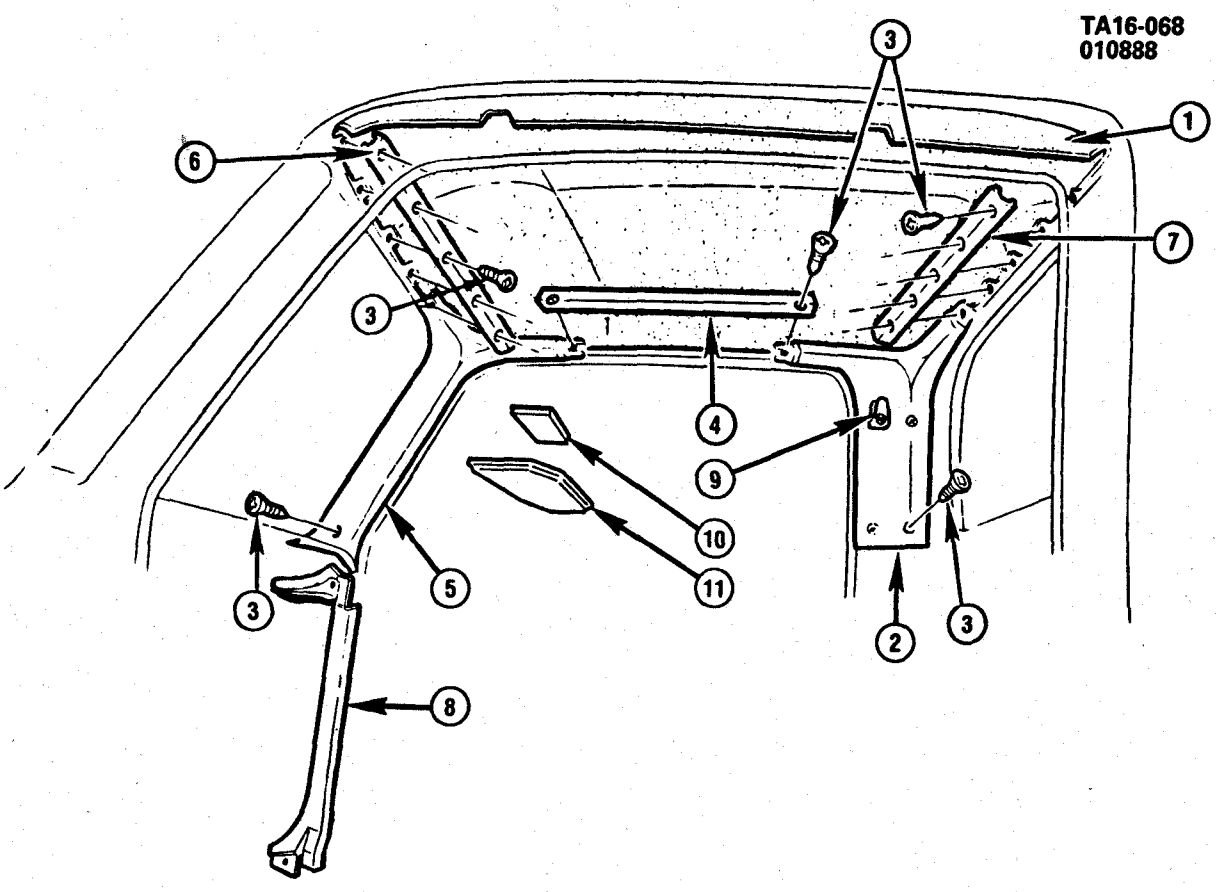

TA16-0685

1985-1986 CK(03) MOLDINGS/GARNISH & ROOF TRIM
1987-1989 RV(03) MOLDINGS/GARNISH & ROOF TRIM

NOTE: "D34" MIRROR I/S, SUNSHADE

1.	16.742	**PANEL**, RF INR TR (BRONZE-76I)(1985-87)	15593864
	16.742	**PANEL**, RF INR TR (CHARCOAL)	15593868
	16.742	**PANEL**, RF INR TR (BLUE)(1985-87)	15593870
	16.742	**PANEL**, RF INR TR (DK MAPLE-77D,77W)	15593874
	16.742	**PANEL**, RF INR TR (LT SADDLE-62D,62W)(1985-87)	15593876
	16.742	**PANEL**, RF INR TR (COGNAC-60I)(1988-89)	15559428
	16.742	**PANEL**, RF INR TR (BLUE-24I)(1989)	15601972
2.	16.520	**MOLDING**, BACK WINDOW GARNISH-LH(*1)	14010955
	16.475	**MOLDING**, BACK WINDOW GARNISH-RH(*1)	14010956
3.	8.977	**SCREW**, OV HD C/REC TAP (M4.2X1.41X25)	11501162
4.	16.742	**MOLDING**, SIDE WINDOW GARNISH(*1)	14036864
5.	16.742	**MOLDING**, WINDSHIELD GARNISH-LH(*1)	14068281
	16.742	**MOLDING**, WINDSHIELD GARNISH-RH(*1)	14068282
6.	16.742	**MOLDING**, WINDSHIELD UPPER GARNISH(*1)	14068249
7.	16.475	**MOLDING**, BACK WINDOW UPPER GARNISH(*1)	14010967
8.	16.081	**FILLER**, I/P LWR-LH(*1)	14068287
	16.081	**FILLER**, I/P LWR-RH(*1)	14068288
9.	16.742	**HOOK**, COAT	15594269
10.	16.070	**MIRROR**, VISOR VANITY (W/D34)	14016671
11.	16.070	**SUNSHADE**, W/SUPT (BLUE-23I)(PAINT TO MATCH)-LH	14013753
	16.070	**SUNSHADE**, W/SUPT (BLUE-23I)(PAINT TO MATCH)-RH	15601908

NOTE 1: PAINT AS REQUIRED.

© 1990 GENERAL MOTORS SERVICE PARTS OPERATIONS—LIGHT TRUCK 52R

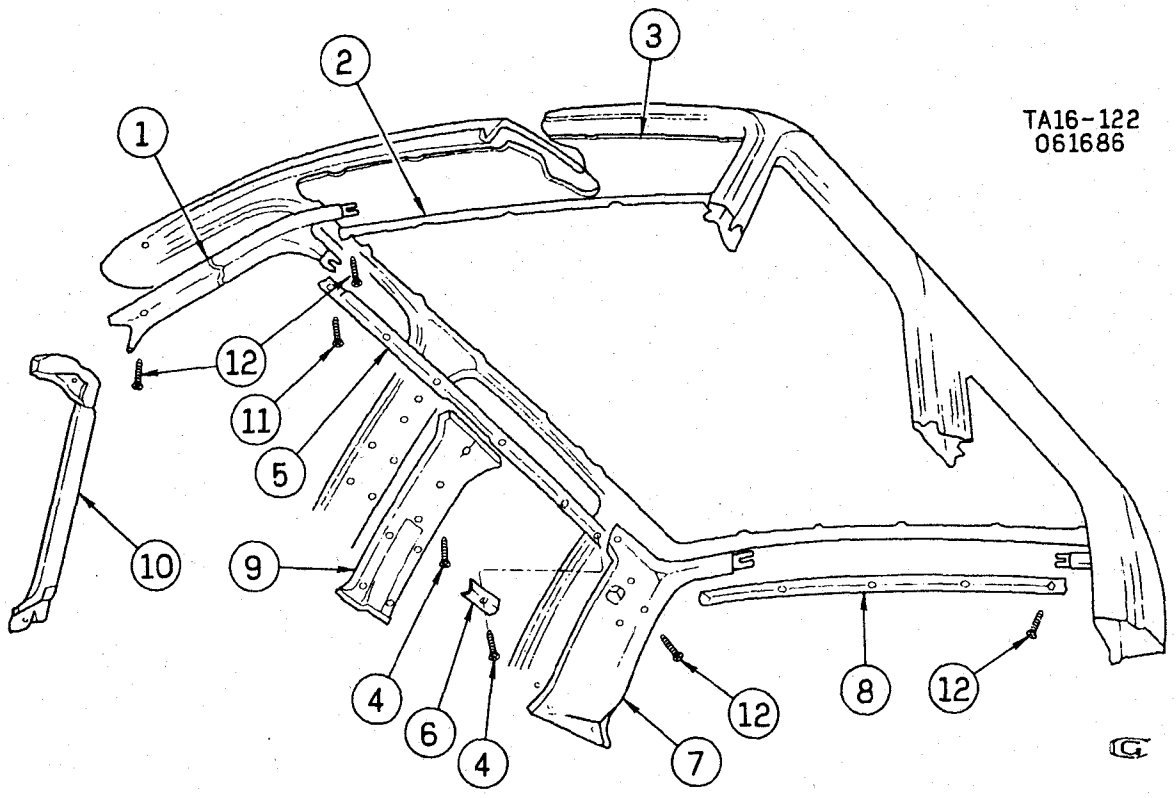

TA16-1225

1985-1986 CK(43) MOLDINGS/GARNISH & ROOF TRIM
1987-1991 RV(43) MOLDINGS/GARNISH & ROOF TRIM

1.	16.742	**MOLDING**, WINDSHIELD GARNISH-LH	14068281
	16.742	**MOLDING**, WINDSHIELD GARNISH-RH	14068282
2.	16.742	**MOLDING**, WINDSHIELD UPPER GARNISH	14068249
3.	16.742	**PANEL**, ROOF INNER TRIM	14049815
4.	8.977	**SCREW**, OVAL HD C/REC TAP (M4.2X1.41X30)	11503423
5.	16.742	**MOLDING**, ROOF SIDE, HEAD GARNISH-LH	14006099
	16.742	**MOLDING**, ROOF SIDE, HEAD GARNISH-RH	14006100
6.	16.742	**CAP**, SIDE, HEAD GARNISH MOLDING-LH	14006101
	16.742	**CAP**, SIDE, HEAD GARNISH MOLDING-RH	14006102
7.	16.520	**MOLDING**, BACK WINDOW GARNISH-LH	14010955
	16.475	**MOLDING**, BACK WINDOW GARNISH-RH	14010956
8.	16.475	**MOLDING**, BACK WINDOW UPPER GARNISH	14010967
9.	16.520	**PANEL**, BODY LOCK PILLAR TRIM-LH	14006113
	16.520	**PANEL**, BODY LOCK PILLAR TRIM-RH	14006114
10.	16.081	**FILLER**, I/P LWR-LH	14068287
	16.081	**FILLER**, I/P LWR-RH	14068288
11.	8.977	**SCREW**, OV HD C/R TAP (M4.2X1.41X30)	
12.	8.977	**SCREW**, (M4.2X1.41X25)	11501167

© 1990 GENERAL MOTORS SERVICE PARTS OPERATIONS—LIGHT TRUCK 52R

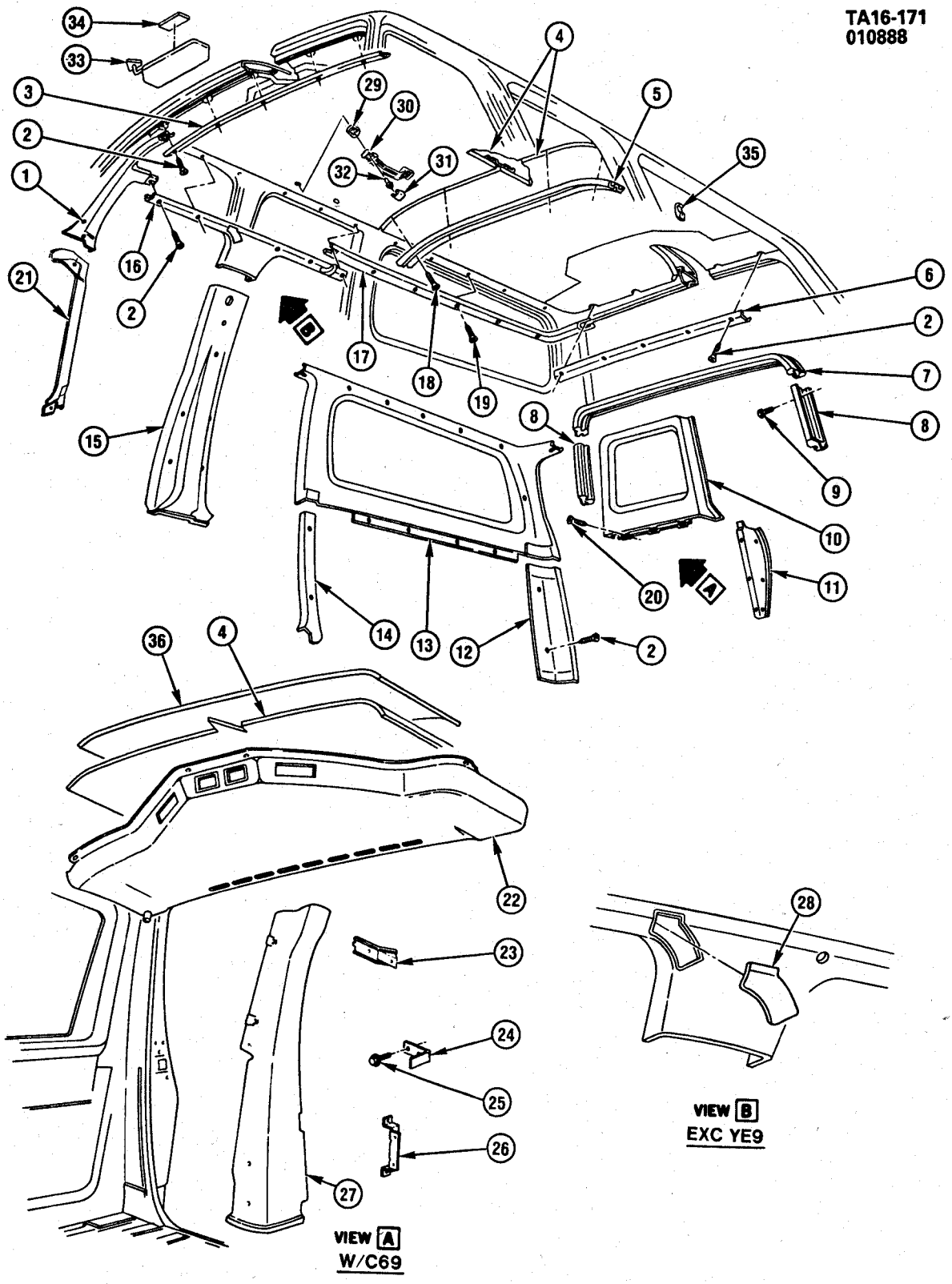

© 1990 GENERAL MOTORS SERVICE PARTS OPERATIONS—LIGHT TRUCK 52R

1985-1986 CK(06) MOLDINGS/GARNISH & ROOF TRIM
1987-1991 RV(06) MOLDINGS/GARNISH & ROOF TRIM

1.	16.742	**MOLDING**, W/S GARNISH-LH(*1)	14068281
	16.742	**MOLDING**, W/S GARNISH-RH(*1)	14068282
2.	8.977	**SCREW**, OV HD TORX TAP (M4.2X1.41X45)(2.729)	22517337
3.	16.742	**MOLDING**, W/S UPR GARNISH(*1)	14068249
4.	16.742	**PANEL**, ROOF TR(*2)	
5.	16.742	**MOLDING**, ROOF TR PNL CTR(*1)	14039743
6.	16.742	**MOLDING**, ROOF RR HDR (EXC C69)(*1)	14037213
7.	16.742	**PANEL**, ROOF RR HDR TR UPR (W/END GATE)	15597631
8.	16.742	**PANEL**, ROOF RR HDR TR-LH (W/END GATE)	14039945
	16.742	**PANEL**, ROOF RR HDR TR-RH (W/END GATE)	14039946
9.	16.165	**BOLT**, RR DR OPG SI TR PNL (W/END GATE)(7.800)	22511204
10.	16.166	**MOLDING**, R/D-LH(*1)	15623947
	16.166	**MOLDING**, R/D-RH(*1)	14037206
11.	16.166	**MOLDING**, R/D LWR-LH(*1)	14068267
	16.166	**MOLDING**, R/D LWR-RH(*1)	14068266
12.	16.575	**MOLDING**, BODY RR COR-RH (W/YE9 EXC C69)(*2)	14037214
13.	16.575	**MOLDING**, BODY SI GARN (BLUE-231)(W/YE9)(1985-88)(*1)	14037181
	16.575	**MOLDING**, BODY SI GARN (BLUE-231)(W/YE9)(EXC C69)(1985-88)(*1)	14037182
	16.575	**MOLDING**, BODY SI GARN (LESS FINISH)(W/YE9)(1989-91)(*1)	15614419
	16.575	**MOLDING**, BODY SI GARN-RH (W/C69,YE9)(1989-91)(*1)	15616647
	16.575	**MOLDING**, BODY SI GARN-RH (W/YE9)(EXC C69)(1989-91)(*1)	15616646
14.	16.520	**MOLDING**, BODY RR LK PLR-LH(*1)	15614449
	16.520	**MOLDING**, BODY RR LK PLR-RH(*1)	15614450
15.	16.520	**MOLDING**, BODY FRT LK PLR-LH(*1)	15614447
	16.520	**MOLDING**, BODY FRT LK PLR-RH(*1)	15614448
16.	16.742	**MOLDING**, RF SI HD FRT-LH(*1)	15614437
	16.742	**MOLDING**, RF SI HD FRT-RH(*1)	15614438
17.	16.575	**MOLDING**, RF SI HD RR-LH(*1)	14037177
	16.575	**MOLDING**, RF SI HD RR-RH(*1)	14037178
18.	8.977	**SCREW**, OV HD CSK C/R WA (M4.2-1.41X30)	11503423
19.	8.977	**SCREW**, OV HD TORX TAP (M4.2X1.41X45)(2.729)	22517337
20.	8.977	**SCREW**, OV HD C/R W/STY (M4.2-1.41X20)	11503537
21.	16.081	**FILLER**, I/P LWR-LH(*1)	14068287
	16.081	**FILLER**, I/P LWR-RH(*1)	14068288
22.	9.211	**SHROUD**, AUX EVAP BLO (W/C69)(*1)	15601936
23.	9.242	**BRACKET**, PLR CVR FRT UPR (W/C69,YE9)	14040866
24.	16.575	**BRACKET**, PLR (W/C69)	3870575
25.	8.977	**BOLT**, SEMS HEX W/FL WA (M6.3X1.81X20)	12337828
26.	9.242	**BRACKET**, PLR CVR LWR (W/C69,YE9)	14040880
27.	9.262	**COVER**, RR PLR (W/C69)(*1)	14074369
28.	16.545	**COVER**, BODY SI MFG HOLE (EXC YE9)	334133
29.	16.450	**SPACER**, ASST HDL(*1)	15606395
30.	16.450	**HANDLE**, ASST (OVER DOOR)(*1)	14067211
31.	16.450	**COVER**, ASST HDL TR(*1)	14063473
32.	16.450	**BOLT**, SI F/D ASST STRP	15606306
33.	16.070	**SUNSHADE**, W/SUPT(*2)	14013753
34.	16.070	**MIRROR**, VISOR VANITY (W/D34)	14016671
35.	16.742	**HOOK**, COAT(*1)	15594269
36.	16.742	**INSULATOR**, RF	3998377

NOTE 1: PAINT AS REQUIRED.
NOTE 2: FOR ADDITIONAL PART NUMBERS & TRIM COMBINATION REFER TO APPLICABLE CATALOG OR CHART.

RPO DEFINITIONS
C69 - HVAC SYSTEM, AIR CONDITIONER ROOF MOUNTED
D34 - MIRROR INSIDE, SUNSHADE
YE9 - CONVENIENCE PKG, COMFORT & DECOR LEVEL #3

© 1990 GENERAL MOTORS SERVICE PARTS OPERATIONS—LIGHT TRUCK 52R

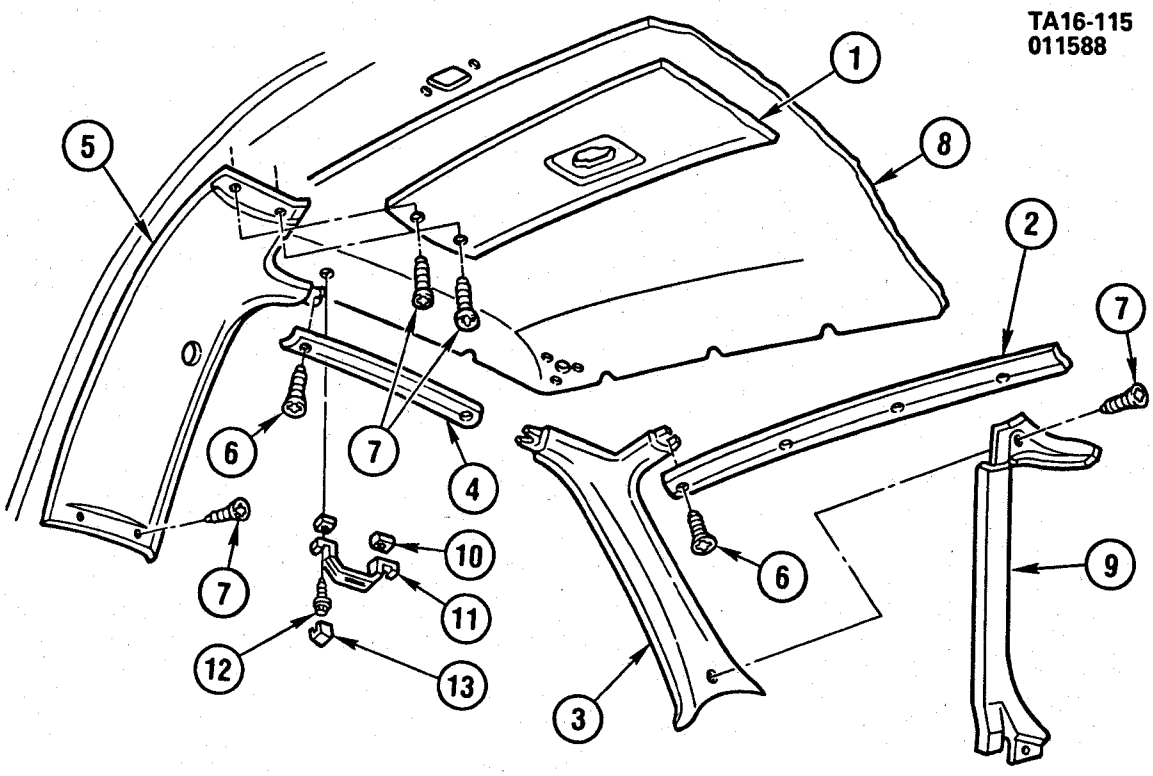

TA16-1156

© 1990 GENERAL MOTORS SERVICE PARTS OPERATIONS—LIGHT TRUCK 52R

1985-1986 K(16) MOLDINGS/GARNISH & ROOF TRIM
1987-1991 V(16) MOLDINGS/GARNISH & ROOF TRIM

1.	16.742	**MOLDING**, ROOF INR PNL GARN	15554978
2.	16.742	**MOLDING**, WINDSHIELD UPPER GARNISH(*1)	14068249
3.	16.742	**MOLDING**, WINDSHIELD GARNISH-LH(*1)	14068281
	16.742	**MOLDING**, WINDSHIELD GARNISH-RH(*1)	14068282
4.	16.742	**MOLDING**, SIDE WINDOW GARNISH(*1)	14036864
5.	16.520	**MOLDING**, BODY LK PLR GARN-LH (1985-87)(*1)	15565083
	16.520	**MOLDING**, BODY LK PLR GARN-LH(*1)	15565083
	16.520	**MOLDING**, BODY LK PLR GARN-RH(*1)	15565084
6.	8.900	**BOLT**, HEX (M10X1.5, 10.9 PHOS)	11501167
7.	8.977	**SCREW**, HWH C/R (M4.3-1.41X20) CB	11503389
8.	16.742	**PANEL**, RF INT TR (1985-87)(*1)	14006093
	16.742	**PANEL**, RF INR TR (BLUE-23I)(1988)	15606373
	16.742	**PANEL**, RF INR TR (MAPLE-77I)(1988-89)	15606374
	16.742	**PANEL**, RF INR TR (DK GRAY-82I)(1988-90)	15606375
	16.742	**PANEL**, RF INR TR (COGNAC-60I)(1988-91)	15606376
	16.742	**PANEL**, RF INR TR (BLUE-24I)(1989-91)	15610126
9.	16.081	**FILLER**, I/P LWR-LH(*1)	14068287
	16.081	**FILLER**, I/P LWR-RH(*1)	14068288
10.	16.450	**SPACER**, ASST HDL(*1)	15606395
11.	16.450	**HANDLE**, ASST (OVER DOOR)(*1)	14067211
12.	16.450	**BOLT**, SI F/D ASST STRP	15606306
13.	16.450	**COVER**, ASST HDL TR(*1)	14063473

NOTE 1: PAINT AS REQUIRED.

© 1990 GENERAL MOTORS SERVICE PARTS OPERATIONS—LIGHT TRUCK 52R

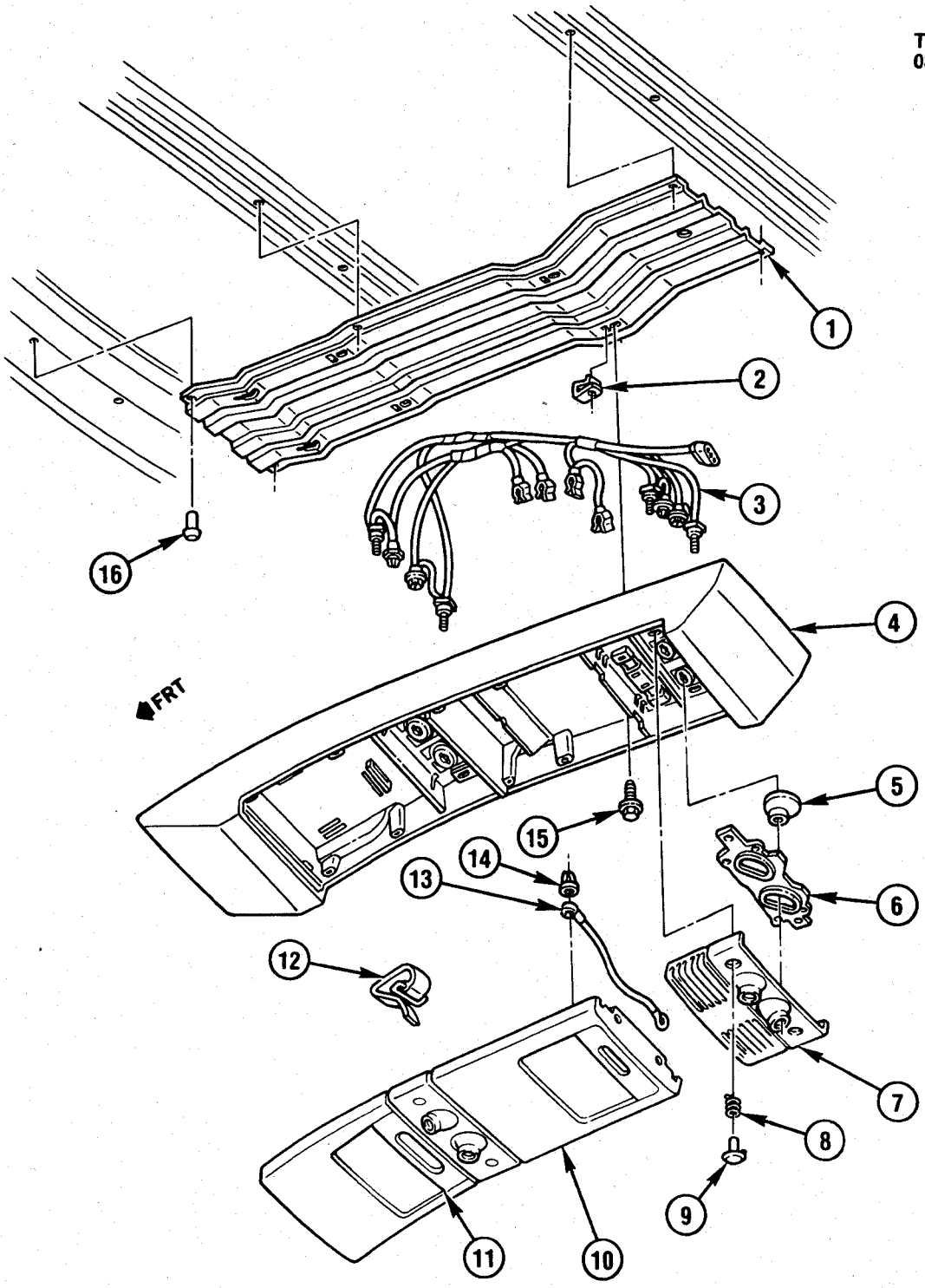

TR16-120

© 1990 GENERAL MOTORS SERVICE PARTS OPERATIONS—LIGHT TRUCK 52R

1989-1991 RV(06) CONSOLE/ROOF W/FRONT HIGH BACK BUCKET SEATS (A95)

1.	16.745	**BRACKET**, RF CNSL	15629658
2.	8.921	**NUT**, U SHAPE (TYPE P, M6.3X1.81, PEOR)	11514290
3.	2.480	**HARNESS**, RF CNSL	8884341
4.	16.745	**ROOF**, CNSL GRAY-82I)(PAINT TO MATCH)	15629630
5.	N.S.	**BODY**, RDG LAMP (PART OF #7)	
6.	N.S.	**RETAINER**, RDG LP BODY (PART OF #7)	
7.	16.745	**LENS**, RF CNSL DOME LAMP (INCL #5,6,8,9, INSUL & RING)	8884337
8.	N.S.	**SPRING**, RDG LP CONT BUT (PART OF #7)	
9.	N.S.	**BUTTON**, RDG LP CONT (PART OF #7)	
10.	16.745	**INSERT**, ROOF CONSOLE W/DOOR (INCL #11)	15537282
11.	N.S.	**DOOR**, RF CNSL SLIDING (PART OF #10)	
12.	16.745	**STRAP**, RF CONSOLE W/BUCKLE (HOLDER)	8884342
13.	16.745	**CORD**, RF CNSL (ELASTIC)	8884339
14.	16.745	**CAP**, RF CNSL CORD RET	8884340
15.	8.977	**BOLT**, SEMS HEX W/FL WA (M6.3X1.81X20, PZOR)	22527475
16.	N.S.	**RIVET**, LARGE HD (1/4X.062X.093, STI.)	

© 1990 GENERAL MOTORS SERVICE PARTS OPERATIONS—LIGHT TRUCK 52R

TR16-104
012988

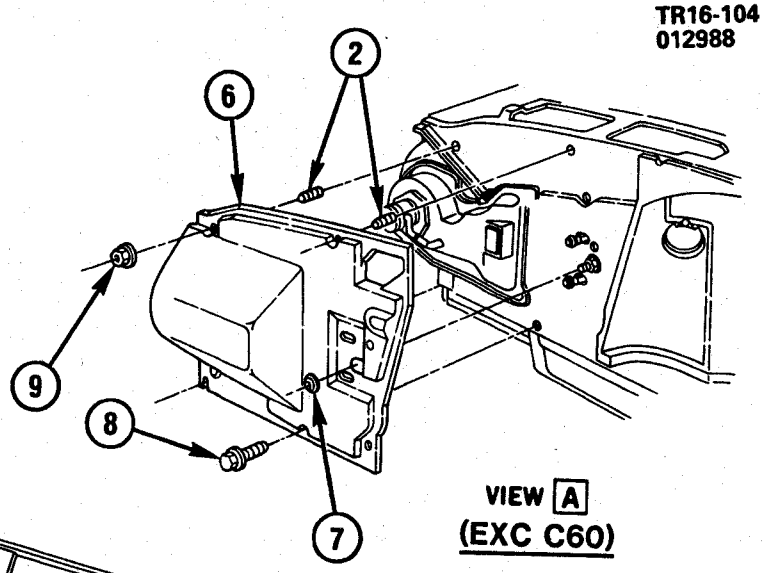

VIEW A
(EXC C60)

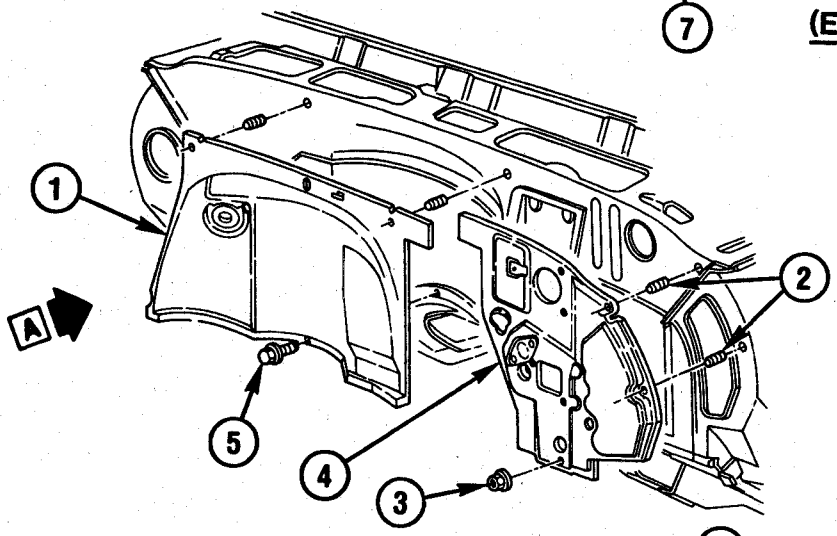

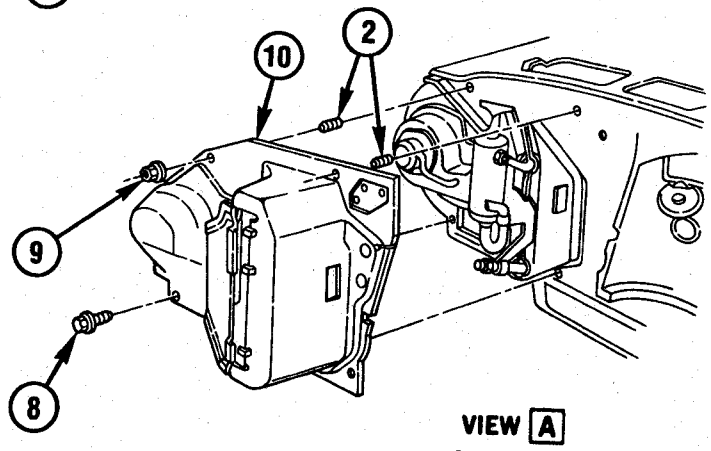

VIEW A
(W/C60)

TR16-104

© 1990 GENERAL MOTORS SERVICE PARTS OPERATIONS—LIGHT TRUCK 52R

1988-1991 RV INSULATION/DASH PANEL (LH6/6.2C,LL4/6.2J)

1.	16.802	**INSULATOR**, DA FRT CTR	15606401
2.	N.S.	**STUD**, WELD	
3.	8.921	**NUT**, HEX STMP (M6.3, TYPE B)	11508693
4.	16.802	**INSULATOR**, DA FRT-LH	15606399
5.	8.977	**SCREW**, HWH TAP (M4.2X1.41X16, PZOR)	11509135
6.	16.802	**INSULATOR**, DA PNL-RH (EXC A.C. C60)	15606442
7.	N.S.	**RETAINER**, PUSH-ON (6.0X24.0)(EXC A.C. C60)	
8.	8.977	**SCREW**, HWH TAP (M4.2X1.41X16, PZOR)	11509135
9.	8.921	**NUT**, HEX STMP (M6.3, TYPE B)	11508693
10.	16.802	**INSULATOR**, DA FRT-RH (W/A.C. C60)	15606398

© 1990 GENERAL MOTORS SERVICE PARTS OPERATIONS—LIGHT TRUCK 52R

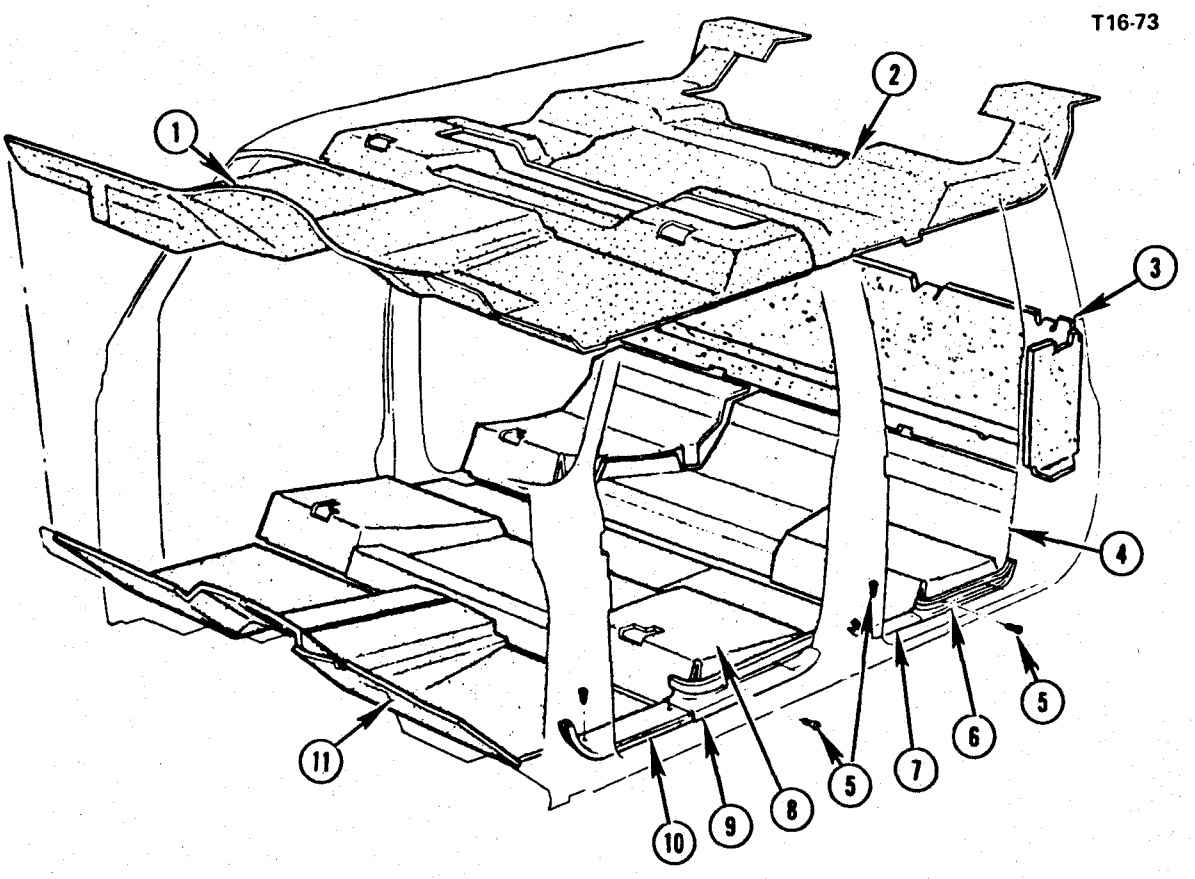

T16-73

1985-1986 CK(43) FLOOR COVERING & SILL PLATES
1987-1991 RV(43) FLOOR COVERING & SILL PLATES

1.	16.850	**CARPET**, FRT (SEE CATALOG)	
	16.800	**MAT**, FRT (SEE CATALOG)	
2.	16.950	**CARPET**, RR (SEE CATALOG)	
	16.800	**MAT**, RR (SEE CATALOG)	
3.	16.585	**INSULATOR**, BODY RR PNL	14016589
4.	16.551	**INSULATOR**, FLR PNL (36X36)(12.980)	462233
5.	8.977	**SCREW**, RD HD C/REC (M4.2-1.41X13, TYPE AB)	11503284
6.	16.603	**PLATE**, SI R/D SILL RR-LH	471069
	16.603	**PLATE**, SI R/D SILL RR-RH	471070
7.	8.977	**SCREW**, OV HD C/S TORX (M4.2X1.41X20)	11504659
8.	8.977	**SCREW**, PAN HD TORX TAP (M4.2X1.41X13)	11504646
9.	16.603	**PLATE**, SI R/D SILL FRT-LH	471067
	16.603	**PLATE**, SI R/D SILL FRT-RH	471068
10.	16.603	**PLATE**, F/D SILL RR-LH	473977
	16.603	**PLATE**, F/D SILL RR-RH	473978
11.	16.603	**PLATE**, F/D SILL FRT-LH	471065
	16.603	**PLATE**, F/D SILL FRT-RH	471066
12.	16.800	**INSULATOR**, FLR & TOE PNL (W/CAMPER SPL Z81)	14057446

© 1990 GENERAL MOTORS SERVICE PARTS OPERATIONS—LIGHT TRUCK 52R

T16-75
071188

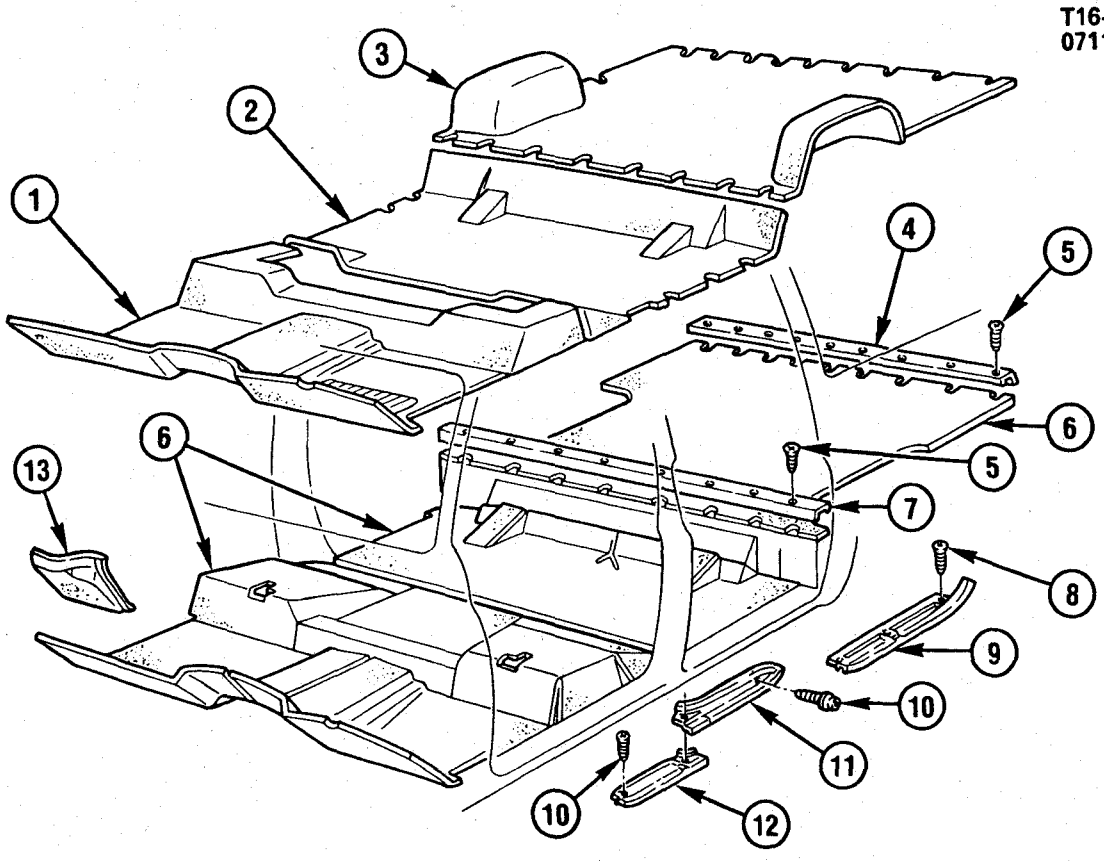

T16-75

1985-1986 CK(06) FLOOR COVERING & SILL PLATES
1987-1991 RV(06) FLOOR COVERING & SILL PLATES

1.	16.850	**CARPET**, FRT (SEE CATALOG)	
	16.800	**MAT**, FRT (SEE CATALOG)	
2.	16.850	**CARPET**, CENTER (SEE CATALOG)	
	16.800	**MAT**, CENTER (SEE CATALOG)	
3.	16.850	**CARPET**, RR & W/H (SEE CATALOG)(USE BULK, CUT TO FIT)	
	16.800	**MAT**, RR (SEE CATALOG)	
4.	16.603	**PLATE**, FLR PNL RR TR	14049954
5.	8.977	**SCREW**, OV HD C/S TORX (M4.2X1.41X20)	11504659
	8.977	**SCREW**, OV HD C/R TAP (M4.2X1.41X20)	11503537
6.	16.551	**INSULATOR**, FLR PNL (36X36)(12.980)	462233
7.	16.603	**PLATE**, FLR PNL FRT SCUFF	14000086
8.	8.977	**SCREW**, OV HD C/R TAP (M4.2-1.41X16)	11501165
9.	16.603	**PLATE**, SI R/D SILL-LH	340079
	16.603	**PLATE**, SI R/D SILL-RH	340080
10.	8.977	**SCREW**, OV HD C/S TORX (M4.2X1.41X20)	11504659
11.	16.603	**PLATE**, F/D SILL RR-LH	473977
	16.603	**PLATE**, F/D SILL RR-RH	473978
12.	16.603	**PLATE**, F/D SILL FRT-LH	471065
	16.603	**PLATE**, F/D SILL FRT-RH	471066
13.	16.800	**INSULATOR**, FLR & TOE PNL (W/TRAILERING SPL Z82)	14057446

© 1990 GENERAL MOTORS SERVICE PARTS OPERATIONS—LIGHT TRUCK 52R

T16-76
071188

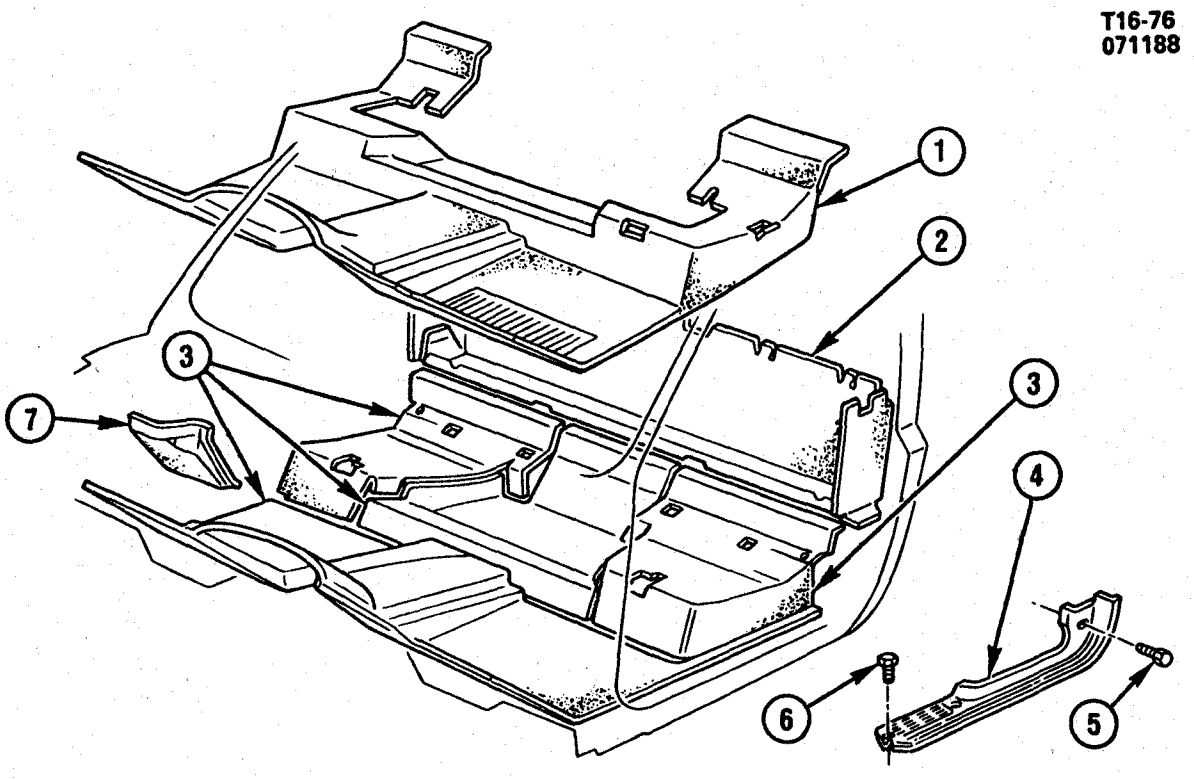

T16-76

1985-1986 CK(03) FLOOR COVERING & SILL PLATES
1987-1989 RV(03) FLOOR COVERING & SILL PLATES

1.	16.850	**CARPET**, FRONT (SEE CATALOG)	
	16.800	**MAT**, FLR & TOE PNL (SEE CATALOG)	
2.	16.585	**INSULATOR**, BODY RR PNL	14016589
3.	9.789	**INSULATOR**, FLR PNL (36X36)(12.980)	462233
4.	16.603	**PLATE**, F/D SILL-LH	15594895
	16.603	**PLATE**, F/D SILL-RH	15594896
5.	8.977	**SCREW**, RD WA HD (M4.2-1.41X20)	11503606
6.	8.977	**SCREW**, SPL RD HD TAP (M4.2X1.41, 9.8 POR)	14082956
7.	16.800	**INSULATOR**, FLR & TOE PNL (W/CAMPER SPL Z81)	14057446

© 1990 GENERAL MOTORS SERVICE PARTS OPERATIONS—LIGHT TRUCK 52R

NOTES

BLANK PAGE

T16-30
080388

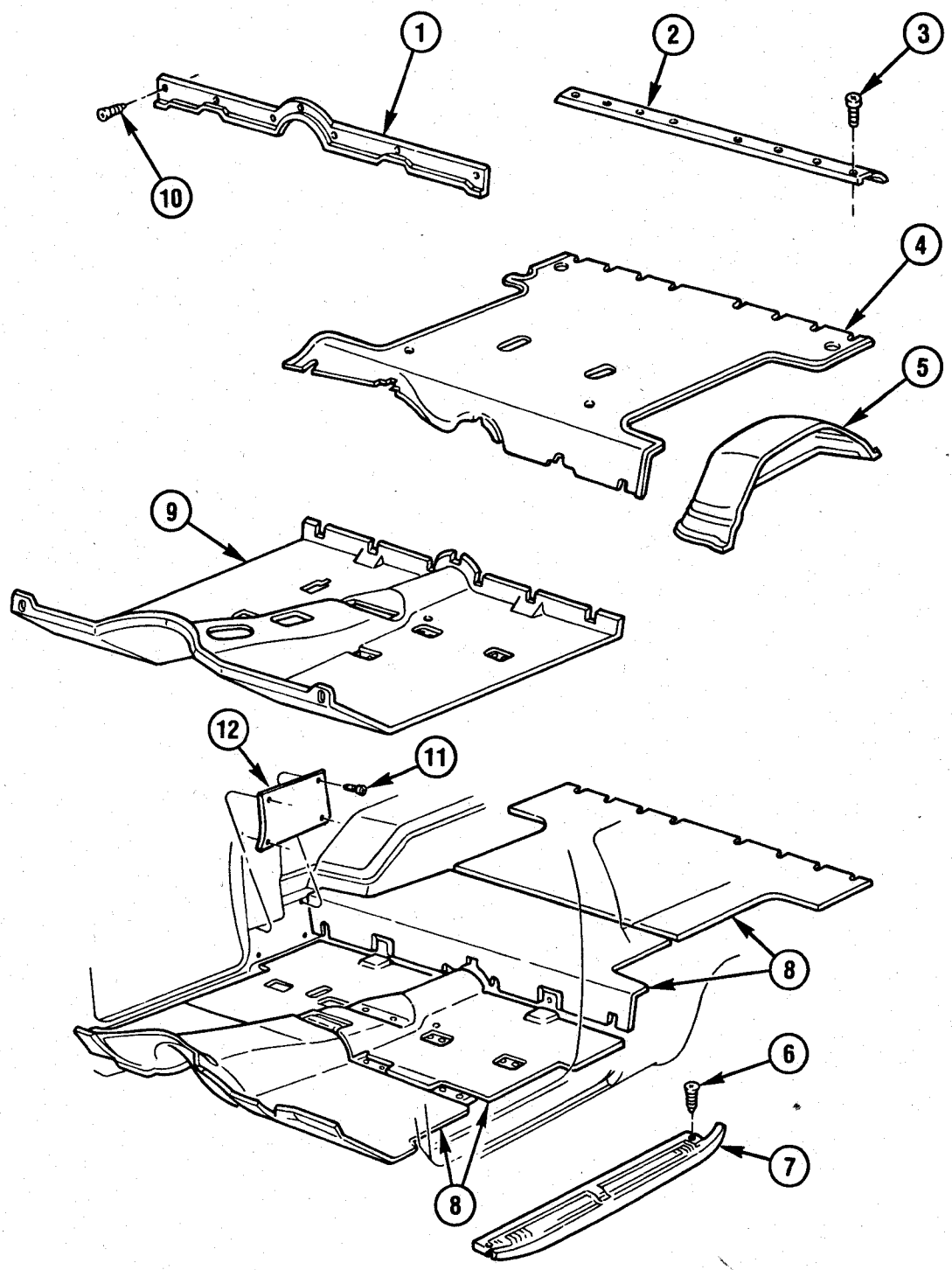

T16-30

© 1990 GENERAL MOTORS SERVICE PARTS OPERATIONS—LIGHT TRUCK 52R

1985-1986 K(16) FLOOR COVERING & SILL PLATES
1987-1990 V(16) FLOOR COVERING & SILL PLATES

1.	16.800	**PLATE**, FLR PNL TRIM	474022
2.	16.603	**PLATE**, FLR PNL RR SCUFF	459847
3.	8.977	**SCREW**, OV HD C/S TORX (M4.2X1.41X20)	11504659
4.	16.850	**CARPET**, FLR PNL RR (SEE CATALOG)	
	16.800	**MAT**, RR PNL (SEE CATALOG)	
5.	16.850	**CARPET**, RR W/H (SEE CATALOG)	
6.	8.977	**SCREW**, OV HD C/S TORX (M4.2X1.41X20)	11504659
7.	16.603	**PLATE**, FRT DOOR SILL-LH	467247
	16.603	**PLATE**, FRT DOOR SILL-RH	467248
8.	16.551	**INSULATOR**, FLR PNL (36X36)(12.980)	462233
9.	16.850	**CARPET**, FLR PNL (SEE CATALOG)	
	16.800	**MAT**, FLR & TOE PNL (BLACK)	15522763
10.	8.977	**SCREW**, OV HD C/R TAP (M4.2X1.41X40)	11500668
11.	8.977	**SCREW**, OV HD C/R TAP (M4.2X1.41X16)	11501165
12.	16.850	**CARPET**, BODY SI PNL (SEE CATALOG)	

© 1990 GENERAL MOTORS SERVICE PARTS OPERATIONS—LIGHT TRUCK 52R

NOTES

BLANK PAGE

© 1990 GENERAL MOTORS SERVICE PARTS OPERATIONS—LIGHT TRUCK 52R

GROUP 17.000

ILLUSTRATION INDEX

	TITLE	PAGE
1985	CK(03) STRIPES/BODY (W/CUSTOM TWO TONE ZY6)	17-3
1985-1986	CK(06) MOLDINGS/BODY	17-5
1987-1988	RV(06) MOLDINGS/BODY	17-5
1985-1986	K(16) MOLDINGS/BODY	17-7
1987-1988	V(16) MOLDINGS/BODY	17-7
1989-1991	RV NAME PLATES/SIDE	17-8
1985-1986	CK PICKUP BOX/FLEETSIDE (03-43)	17-13
1987-1991	RV PICKUP BOX/FLEETSIDE (03-43)	17-13
1985-1986	CK(03) PICKUP BOX/STEPSIDE	17-15
1987	RV(03) PICKUP BOX/STEPSIDE	17-15
1985-1986	CK(06) ENDGATE	17-17
1987-1991	RV(06) ENDGATE	17-17
1985-1986	K(16) ENDGATE	17-21
1987-1991	V(16) ENDGATE	17-21
1985-1986	CK(03-43) MOLDINGS	17-25
1987-1991	RV(03-43) MOLDINGS	17-25
1989-1991	RV(06) MOLDINGS (W/B85,B93,B96)	17-27
1989-1991	V MOLDINGS (W/B85,B93,B96)	17-28
1989-1990	RV(43) DECALS & STRIPES STRIPES-BODY	17-31
1985-1986	CK STRIPES (W/DECOR PKG ZY5/ZY9)	17-33
1987-1991	RV STRIPES (W/DECOR PKG ZY5/ZY9)	17-33
1989-1990	RV(06-16) STRIPES STRIPES-BODY	17-37
1985-1986	CK(03) STRIPES/BODY SIDE & ENDGATE (W/VALUE DECOR PKG YJ6/D92)	17-38
1987	RV(03) STRIPES/BODY SIDE & ENDGATE (W/VALUE DECOR PKG YJ6/D92)	17-38

© 1990 GENERAL MOTORS SERVICE PARTS OPERATIONS—LIGHT TRUCK 52R

NOTES

BLANK PAGE

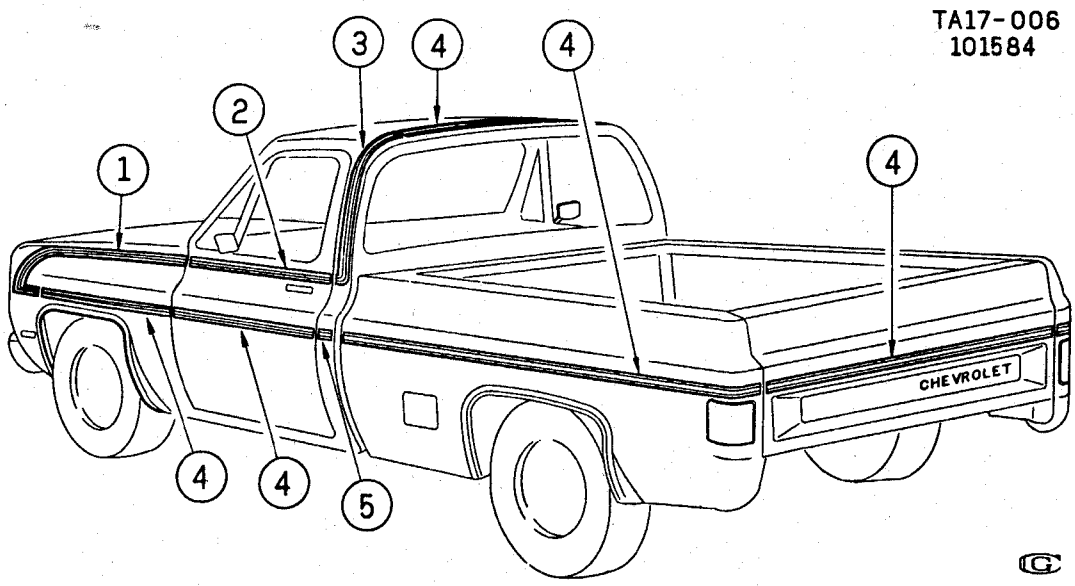

TA17-006

© 1990 GENERAL MOTORS SERVICE PARTS OPERATIONS—LIGHT TRUCK 52R

1985 CK(03) STRIPES/BODY (W/CUSTOM TWO TONE ZY6)

1.	8.132	STRIPE, FDR SI UPR-RH (WHITE/BLUE/WHITE-22A)	15593430
	8.132	STRIPE, FDR SI UPR-LH (WHITE/BLUE/WHITE-22A)	15593429
	8.132	STRIPE, FDR SI UPR-RH (LT BLUE/BRI BLUE/LT BLUE-24A)	15593432
	8.132	STRIPE, FDR SI UPR-LH (LT BLUE/BRI BLUE/LT BLUE-24A)	15593431
	8.132	STRIPE, FDR SI UPR-RH (TAN/BLUE/TAN-26A)	15593434
	8.132	STRIPE, FDR SI UPR-LH (TAN/BLUE/TAN-26A)	15593433
	8.132	STRIPE, FDR SI UPR-RH (WHITE/ORANGE/WHITE-84A)	15593436
	8.132	STRIPE, FDR SI UPR-LH (WHITE/ORANGE/WHITE-84A)	15593435
	8.132	STRIPE, FDR SI UPR-RH (SILVER/ORANGE/SILVER-85A)	15593438
	8.132	STRIPE, FDR SI UPR-LH (SILVER/ORANGE/SILVER-85A)	15593437
	8.132	STRIPE, FDR SI UPR-RH (BLACK/ORANGE/BLACK-86A)	15593440
	8.132	STRIPE, FDR SI UPR-LH (BLACK/ORANGE/BLACK-86A)	15593439
	8.132	STRIPE, FDR SI UPR-RH (TAN/ORANGE/TAN-87A)(*3)	15593442
	8.132	STRIPE, FDR SI UPR-LH (TAN/ORANGE/TAN-87A)(*3)	15593441
	8.132	STRIPE, FDR SI UPR-RH (TAN/LT ORANGE/TAN-81A)(*2)	15593444
	8.132	STRIPE, FDR SI UPR-LH (TAN/LT ORANGE/TAN-81A)(*2)	15593443
2.	17.507	STRIPE, DR UPR-RH (WHITE/BLUE/WHITE-22A)	15593446
	17.507	STRIPE, DR UPR-LH (WHITE/BLUE/WHITE-22A)	15593445
	17.507	STRIPE, DR UPR-RH (LT BLUE/BRI BLUE/LT BLUE-24A)	15593448
	17.507	STRIPE, DR UPR-LH (LT BLUE/BRI BLUE/LT BLUE-24A)	15593447
	17.507	STRIPE, DR UPR-RH (TAN/BLUE/TAN-26A)	15593450
	17.507	STRIPE, DR UPR-LH (TAN,BLUE/TAN-26A)	15593449
	17.507	STRIPE, DR UPR-RH (WHITE/ORANGE/WHITE-84A)	15593452
	17.507	STRIPE, DR UPR-LH (WHITE/ORANGE/WHITE-84A)	15593451
	17.507	STRIPE, DR UPR-RH (SILVER/ORANGE/SILVER-85A)	15593454
	17.507	STRIPE, DR UPR-LH (SILVER/ORANGE/SILVER-85A)	15593453
	17.507	STRIPE, DR UPR-RH (BLACK/ORANGE/BLACK-86A)	15593456
	17.507	STRIPE, DR UPR-LH (BLACK/ORANGE/BLACK-86A)	15593455
	17.507	STRIPE, DR UPR-RH (TAN/ORANGE/TAN-87A)(*3)	15593458
	17.507	STRIPE, DR UPR-LH (TAN/ORANGE/TAN-87A)(*3)	15593457
	17.507	STRIPE, DR UPR-RH (TAN/LT ORANGE/TAN-81A)(*2)	15593460
	17.507	STRIPE, DR UPR-LH (TAN/LT ORANGE/TAN-81A)(*2)	15593459
3.	17.507	STRIPE, BODY SI UPR-RH (WHITE/BLUE/WHITE-22A)	15593462
	17.507	STRIPE, BODY SI UPR-LH (WHITE/BLUE/WHITE-22A)	15593461
	17.507	STRIPE, BODY SI UPR-RH (LT BLUE/BRI BLUE/LT BLUE-24A)	15593464
	17.507	STRIPE, BODY SI UPR-LH (LT BLUE/BRI BLUE/LT BLUE-24A)	15593463
	17.507	STRIPE, BODY SI UPR-RH (TAN/BLUE/TAN-26A)	15593466
	17.507	STRIPE, BODY SI UPR-LH (TAN,BLUE/TAN-26A)	15593465
	17.507	STRIPE, BODY SI UPR-RH (WHITE/ORANGE/WHITE-84A)	15593468
	17.507	STRIPE, BODY SI UPR-LH (WHITE/ORANGE/WHITE-84A)	15593467
	17.507	STRIPE, BODY SI UPR-RH (SILVER/ORANGE/SILVER-85A)	15593470
	17.507	STRIPE, BODY SI UPR-LH (SILVER/ORANGE/SILVER-85A)	15593469
	17.507	STRIPE, BODY SI UPR-RH (BLACK/ORANGE/BLACK-86A)	15593472
	17.507	STRIPE, BODY SI UPR-LH (BLACK/ORANGE/BLACK-86A)	15593471
	17.507	STRIPE, BODY SI UPR-RH (TAN/ORANGE/TAN-87A)(*3)	15593474
	17.507	STRIPE, BODY SI UPR-LH (TAN/ORANGE/TAN-87A)(*3)	15593473
	17.507	STRIPE, BODY SI UPR-RH (TAN/LT ORANGE/TAN-81A)(*2)	15593476
	17.507	STRIPE, BODY SI UPR-LH (TAN/LT ORANGE/TAN-81A)(*2)	15593475
4.	8.132	STRIPE (WHITE/BLUE/WHITE-22A)(*1)	15589837
	8.132	STRIPE (LT BLUE/BRI BLUE/LT BLUE-24A)(*1)	15589838
	8.132	STRIPE (TAN/BLUE/TAN-26A)(*1)	15589839
	8.132	STRIPE (WHITE/ORANGE/WHITE-84A)(*1)	15589833
	8.132	STRIPE (SILVER/ORANGE/SILVER-85A)(*1)	15589834
	8.132	STRIPE (BLACK/ORANGE/BLACK-86A)(*1)	15589835
	8.132	STRIPE (TAN/ORANGE/TAN-87A)(*1,3)	15589836
	8.132	STRIPE (TAN/LT ORANGE/TAN-81A)(*1,2)	15589840
5.	17.507	STRIPE, BODY SI LWR-RH (WHITE/BLUE/WHITE-22A)	15593578
	17.507	STRIPE, BODY SI LWR-LH (WHITE/BLUE/WHITE-22A)	15593579
	17.507	STRIPE, BODY SI LWR-RH (LT BLUE/BRI BLUE/LT BLUE-24A)	15593580
	17.507	STRIPE, BODY SI LWR-LH (LT BLUE/BRI BLUE/LT BLUE-24A)	15593581
	17.507	STRIPE, BODY SI LWR-RH (TAN/BLUE/TAN-26A)	15593582
	17.507	STRIPE, BODY SI LWR-LH (TAN,BLUE/TAN-26A)	15593583
	17.507	STRIPE, BODY SI LWR-RH (WHITE/ORANGE/WHITE-84A)	15593584
	17.507	STRIPE, BODY SI LWR-LH (WHITE/ORANGE/WHITE-84A)	15593585
	17.507	STRIPE, BODY SI LWR-RH (SILVER/ORANGE/SILVER-85A)	15593586
	17.507	STRIPE, BODY SI LWR-LH (SILVER/ORANGE/SILVER-85A)	15593587
	17.507	STRIPE, BODY SI LWR-RH (BLACK/ORANGE/BLACK-86A)	15593588
	17.507	STRIPE, BODY SI LWR-LH (BLACK/ORANGE/BLACK-86A)	15593589
	17.507	STRIPE, BODY SI LWR-RH (TAN/ORANGE/TAN-87A)(*3)	15593590
	17.507	STRIPE, BODY SI LWR-LH (TAN/ORANGE/TAN-87A)(*3)	15593591
	17.507	STRIPE, BODY SI LWR-RH (TAN/LT ORANGE/TAN-81A)(*2)	15593592
	17.507	STRIPE, BODY SI LWR-LH (TAN/LT ORANGE/TAN-81A)(*2)	15593593

© 1990 GENERAL MOTORS SERVICE PARTS OPERATIONS—LIGHT TRUCK 52R

NOTE 1: EACH STRIPE IS NINE FEET IN LENGTH & IS USED AS FRT FDR LWR, DR LWR, PUBX SI, TAIL GATE & ROOF CTR AS INDICATED, BY CUTTING AS REQUIRED.
NOTE 2: 81A ACCENT STRIPE USED ONLY ON THE FOLLOWING TWO TONE PAINT COMBINATION: 61L DOESKIN TAN PRIMARY & 66U INDIAN BRONZE MET SECONDARY.
NOTE 3: 87A ACCENT STRIPE USED ONLY ON THE FOLLOWING TWO TONE PAINT COMBINATION: 61L DOESKIN TAN PRIMARY & 72U APPLE RED SECONDARY.

© 1990 GENERAL MOTORS SERVICE PARTS OPERATIONS—LIGHT TRUCK 52R

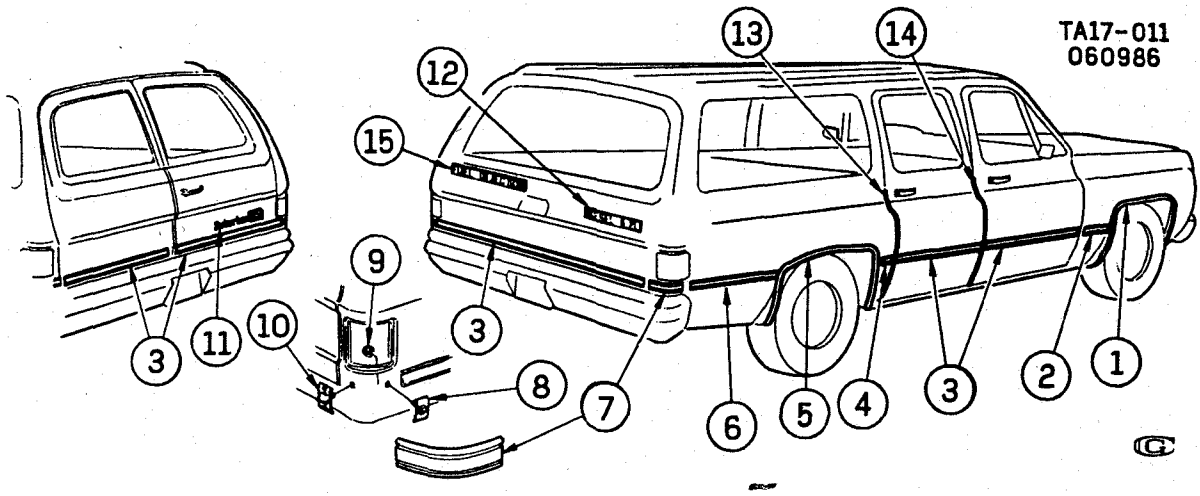

TA17-011

1985-1986 CK(06) MOLDINGS/BODY
1987-1988 RV(06) MOLDINGS/BODY

NOTE: B84 MOLDINGS HAVE A BLACK CENTER, B85 MOLDINGS HAVE BRIGHT CENTER.

1.	8.132	**MOLDING**, F/FDR WHL OPG-LH	14022805
	8.132	**MOLDING**, F/FDR WHL OPG-RH	14022806
2.	8.132	**MOLDING**, F/FDR SI LWR RR-LH (B84)	15596905
	8.132	**MOLDING**, F/FDR SI LWR RR-RH (B84)	15596906
	8.132	**MOLDING**, F/FDR SI LWR RR-LH (B85)	15596907
	8.132	**MOLDING**, F/FDR SI LWR RR-RH (B85)	15596908
3.	17.215	**MOLDING**, F/D, R/D, F/D, T/GATE (B84)(66.4" LONG CUT AS REQ)	15596953
	17.215	**MOLDING**, F/D, R/D, F/D, T/GATE (B85)(66.4" LONG CUT AS REQ)	15596954
4.	17.507	**MOLDING**, BODY SI LWR FRT-LH (B84)	15596919
	17.507	**MOLDING**, BODY SI LWR FRT-RH (B84)	15596920
	17.507	**MOLDING**, BODY SI LWR FRT-LH (B85)	15596921
	17.507	**MOLDING**, BODY SI LWR FRT-RH (B85)	15596922
5.	17.507	**MOLDING**, SI PNL WHL OPG-LH	6273599
	17.507	**MOLDING**, SI PNL WHL OPG-RH	6273600
6.	17.507	**MOLDING**, BODY SI LWR RR-LH (B84)	15596927
	17.507	**MOLDING**, BODY SI LWR RR-RH (B84)	15596928
	17.507	**MOLDING**, BODY SI LWR RR-LH (B85)	15596929
	17.507	**MOLDING**, BODY SI LWR RR-RH (B85)	15596930
7.	17.507	**MOLDING**, BODY SI LWR RR COR-LH (B84)	15549301
	17.507	**MOLDING**, BODY SI LWR RR COR-RH (B84)	15549302
	17.507	**MOLDING**, BODY SI LWR RR COR-LH (B85)	15549303
	17.507	**MOLDING**, BODY SI LWR RR COR-RH (B85)	15549304
8.	17.507	**RETAINER**, RR COR LWR MLDG RR	14022856
9.	8.921	**NUT**, STMPD W/SLR (#10-24, ZC)	9426926
10.	17.507	**RETAINER**, RR COR LWR MLDG SI	14018564
11.	17.215	**PLATE**, BODY RR NAME (GMC) "SUBURBAN"	14016615
	17.215	**PLATE**, BODY RR NAME (CHEV) "SUBURBAN"	14016626
	17.215	**PLATE**, RR DR(GMC)	15616908
12.	17.215	**PLATE**, T/GATE OR BACK DR NAME "DIESEL 6.2L"	14043698
13.	16.445	**GUARD**, RR DR EDGE-LH	14072891
	16.445	**GUARD**, RR DR EDGE-RH	14072892
14.	16.445	**GUARD**, FRT DR EDGE-LH	14072891
	16.445	**GUARD**, FRT DR EDGE-RH	14072892
15.	17.215	**EMBLEM**, BODY "FUEL INJECTION"	15554973

© 1990 GENERAL MOTORS SERVICE PARTS OPERATIONS—LIGHT TRUCK 52R

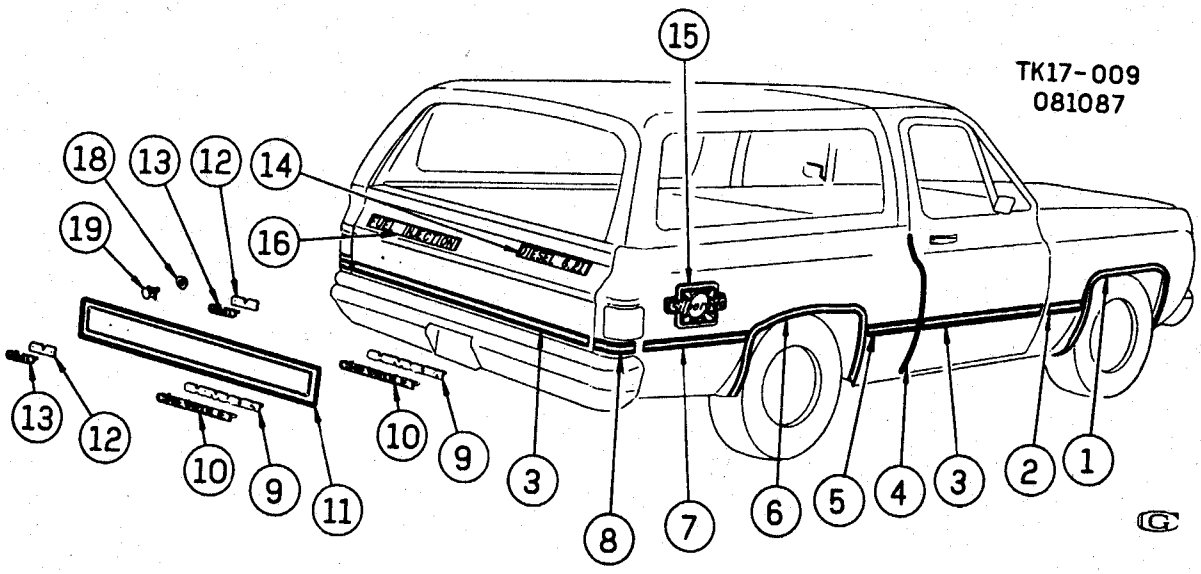

TK17-009

© 1990 GENERAL MOTORS SERVICE PARTS OPERATIONS—LIGHT TRUCK 52R

1985-1986 K(16) MOLDINGS/BODY
1987-1988 V(16) MOLDINGS/BODY

NOTE: B84 MOLDINGS HAVE BLACK CENTER, B85 MOLDINGS HAVE BRIGHT CENTER.

1.	8.132	**MOLDING**, F/FDR WHL OPG-LH	14022805
	8.132	**MOLDING**, F/FDR WHL OPG-RH	14022806
2.	8.132	**MOLDING**, F/FDR SI LWR RR-LH (B84)(1985-88)	15596905
	8.132	**MOLDING**, F/FDR SI LWR RR-RH (B84)(1985-88)	15596906
	8.132	**MOLDING**, F/FDR SI LWR RR-LH (B85)	15596907
	8.132	**MOLDING**, FRT FDR LWR RR-LH (B85)	15628787
	8.132	**MOLDING**, F/FDR SI LWR RR-RH (B85)	15596908
	8.132	**MOLDING**, FRT FDR LWR RR-RH (B85)	15628788
3.	17.215	**MOLDING**, T/GATE & F/D LWR (B84)(1985-88)(*1)	15596953
	17.215	**MOLDING**, T/GATE & F/D LWR (B85)(1985-88)(*1)	15596954
	17.215	**MOLDING**, E/GATE LWR (W/B85)(1989)(*1)	15568977
4.	16.445	**GUARD**, F/D EDGE-LH (1985-88)	14072891
	16.445	**GUARD**, F/D EDGE-RH (1985-88)	14072892
	16.445	**GUARD**, DR EDGE (B85,B93)(1989)	15641889
5.	17.507	**MOLDING**, BODY SI LWR FRT-LH (B84)(1985-88)	15596923
	17.507	**MOLDING**, BODY SI LWR FRT-RH (B84)(1985-88)	15596938
	17.507	**MOLDING**, BODY SI LWR FRT-LH (B85)(1985-88)	15596925
	17.507	**MOLDING**, BODY SI LWR FRT-LH (B85)(1989)	15628789
	17.507	**MOLDING**, BODY SI LWR FRT-RH (B85)(1985-88)	15596926
	17.507	**MOLDING**, BODY SI LWR FRT-RH (B85)(1989)	15628790
6.	17.507	**MOLDING**, SI PNL WHL OPG-LH	6273599
	17.507	**MOLDING**, SI PNL WHL OPG-RH	6273600
7.	17.507	**MOLDING**, BODY SI LWR RR-LH (B84)(1985-88)	15596931
	17.507	**MOLDING**, BODY SI LWR RR-RH (B84)(1985-88)	15596932
	17.507	**MOLDING**, BODY SI LWR RR-LH (B85)(1985-88)	15596957
	17.507	**MOLDING**, BODY SI LWR RR-LH (B85)(1989)	15628793
	17.507	**MOLDING**, BODY SI LWR RR-RH (B85)(1985-88)	15596934
	17.507	**MOLDING**, BODY SI LWR RR-RH (B85)(1989)	15628794
8.	17.507	**MOLDING**, BODY SI LWR RR CORNER-LH (B84)(1985-88)	14027593
	17.507	**MOLDING**, BODY SI LWR RR CORNER-RH (B84)(1985-88)	14027594
	17.507	**MOLDING**, BODY SI LWR RR CORNER-LH (B85)	14027597
	17.507	**MOLDING**, BODY SI LWR RR CORNER-RH (B85)	14027598
	17.507	**RETAINER**, RR CORNER LWR MLDG (SIDE POSITION)	14018564
	17.507	**RETAINER**, RR CORNER LWR MLDG (REAR POSITION)	14022856
9.	17.215	**GASKET**, T/GATE NAME PLT (CHEV)	14051874
10.	17.215	**PLATE**, T/GATE NAME "CHEVROLET"	14027523
11.	17.215	**PANEL**, T/GATE TRIM (CHEV)(1985-88)	14027525
	17.215	**PANEL KIT**, T/GATE TRIM (CHEV)(1989)	15616912
	17.215	**PANEL**, T/GATE TRIM (GMC)(1985-88)	14027526
	17.215	**PANEL KIT**, T/GATE TRIM (GMC)(1989)	15616911
12.	17.215	**GASKET**, T/GATE NAME PLT (GMC)	14051875
13.	17.215	**PLATE**, T/GATE NAME "GMC"	14027524
14.	17.215	**PLATE**, T/GATE NAME "DIESEL 6.2L"	14043698
15.	17.507	**PLATE**, BODY RR NAME (CHEV) "SILVERADO" (K/V)	14014315
	17.507	**PLATE**, BODY RR NAME (GMC) "SIERRA CLASSIC" (K/V)	14013796
16.	17.215	**EMBLEM**, BODY RR "FUEL INJECTION" (87-88)	15554973
18.	8.921	**NUT**, STAMPED (#10-24, ZC)	9426926
19.	17.215	**BOLT**, END GATE TR PNL	331640

NOTE 1: STRIPE IS EXACT LENGTH FOR T/GATE APPLICATION, CUT AS REQUIRED FOR FRT DOOR APPLICATION.

© 1990 GENERAL MOTORS SERVICE PARTS OPERATIONS—LIGHT TRUCK 52R

TR17-032
120288

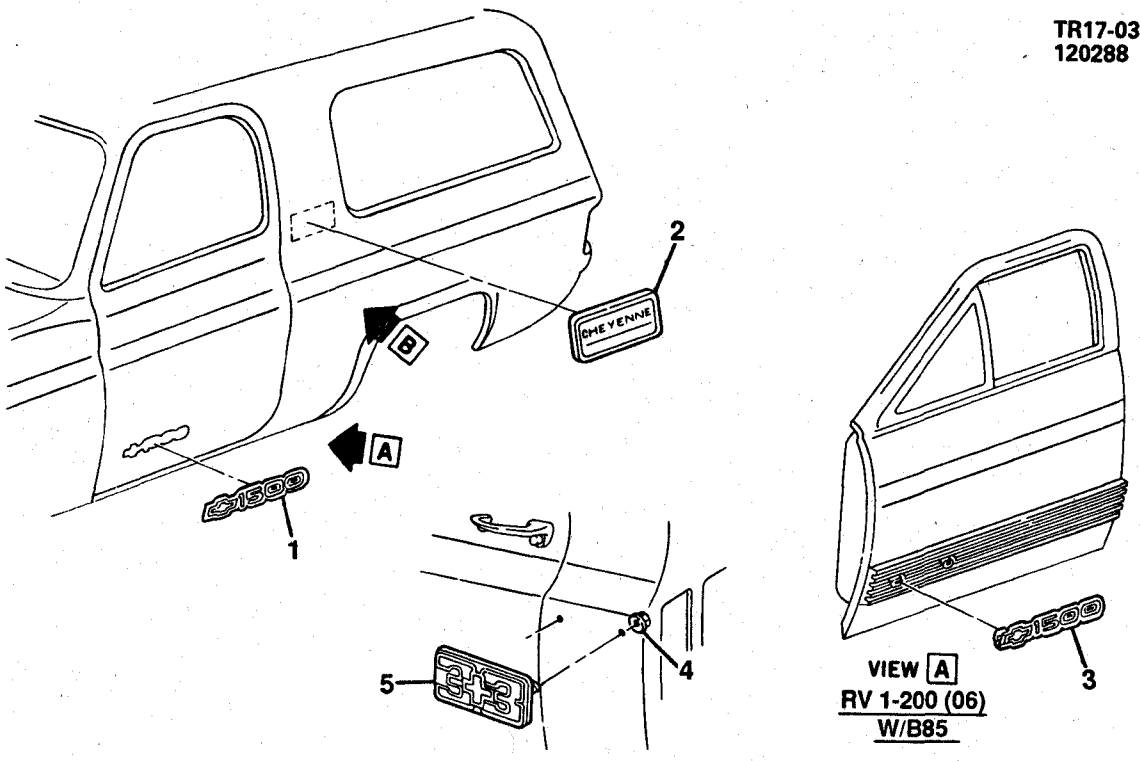

TR17-032

1989-1991 RV NAME PLATES/SIDE

1.	17.507	PLATE, SI F/D NAME (GMC 1500)	15551232
	17.507	PLATE, SI F/D NAME (CHEV)("BOWTIE" 1500)	15551230
2.	17.507	PLATE, BODY SI NAME (CHEYENNE)	15569576
3.	17.507	PLATE, SI F/D NAME (1500)(W/MLDG)	15551233
4.	8.921	NUT, MET SKW (M5X15 FLG PHOS)	11501047
5.	17.507	PLATE, BODY SI NA (3±3)	15607847

© 1990 GENERAL MOTORS SERVICE PARTS OPERATIONS—LIGHT TRUCK 52R

NOTES

BLANK PAGE

NOTES

© 1990 GENERAL MOTORS SERVICE PARTS OPERATIONS—LIGHT TRUCK 52R

NOTES

© 1990 GENERAL MOTORS SERVICE PARTS OPERATIONS—LIGHT TRUCK 52R

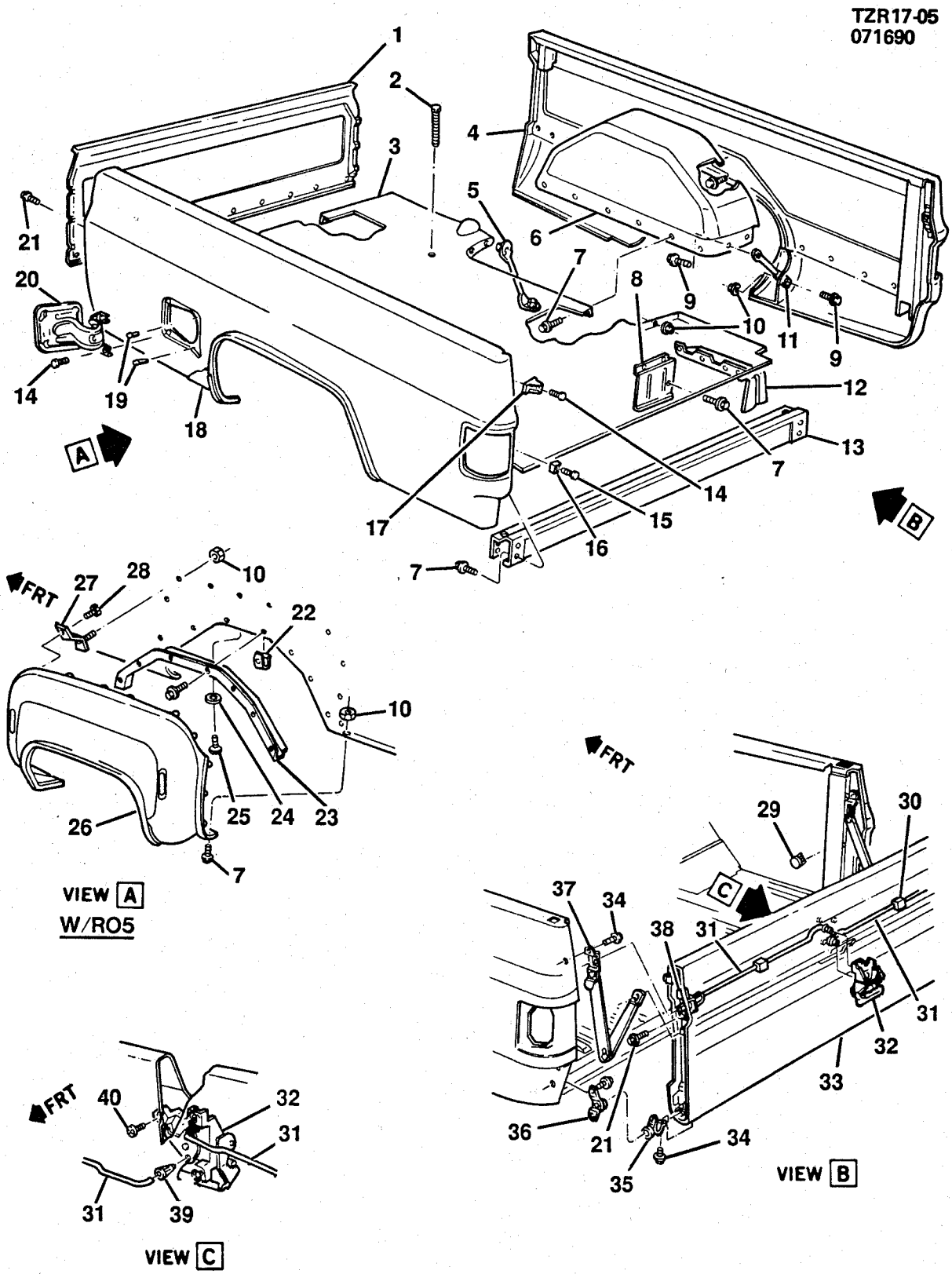

© 1990 GENERAL MOTORS SERVICE PARTS OPERATIONS—LIGHT TRUCK 52R

1985-1986 CK PICKUP BOX/FLEETSIDE (03-43)
1987-1991 RV PICKUP BOX/FLEETSIDE (03-43)

1.	17.455	**PANEL**, PICKUP BOX FRT	15628614
2.	17.090	**BOLT**, PUBX BODY (.5X13X11.180, ZP)(1985-91)	14039924
	9.008	**BOLT**, BODY HOLDN (1/2-13X5.20, 260M)(1985-86)	14032766
	9.008	**BOLT**, PUBX BODY (.5X13X10.625, ZP)(1985-87)	14013721
	9.008	**BOLT**, PUBX (.5X13X4.250, ZP)(1987-91)	15599971
3.	17.400	**PLATFORM**, (8 FT BOX)(INCL #13)	15628611
	17.400	**PLATFORM**, (6 1/2 FT BOX)(INCL #13)(1985-87)	15596993
4.	17.505	**PANEL**, SI-LH (6 1/2 FT)(1985-87)	15597623
	17.505	**PANEL**, SI-RH (6 1/2 FT)(W/AUX TK)(1985-87)	15597624
	17.505	**PANEL**, SI-RH (6 1/2 FT)(EXC AUX TK)(1985-87)	15597632
	17.505	**PANEL**, SI-LH (8 FT)	15628615
	17.505	**PANEL**, SI-RH (8 FT)(W/AUX TK)	15628616
	17.505	**PANEL**, SI-RH (8 FT)(EXC AUX TK)(1985-89)	15628618
	17.505	**PANEL**, SI-RH (8 FT)(W/DUAL WHLS EXC AUX TK)(INCL #19) (1985-86)	15591208
5.	17.505	**BRACE**, SI OTR PNL	330438
6.	17.505	**PANEL**, W/H	14027451
7.	8.900	**BOLT**, HEX (5/16-18X5/8, 280M)	180075
	8.931	**WASHER**, SPR LK (5/16, PL)	9439511
8.	17.505	**PANEL**, SI INR PNL-LH (W/DUAL RR WHLS)	330489
	17.505	**PANEL**, SI INR PNL-RH (W/DUAL RR WHLS)	330490
9.	8.900	**SCREW**, HEX W/CON WA (5/16-18X7/8)(8.080)	473892
10.	8.917	**NUT**, HFH (5/16-18X.20, 286M)	1359887
11.	17.505	**BRACE**, PICKUP BOX S/PNL (EXC R05)(1987-91)	15606342
12.	17.505	**SHIELD**, SI PNL-LH (8 FT)	467913
	17.505	**SHIELD**, SI PNL-RH (8 FT)	467914
	17.505	**SHIELD**, SI PNL-LH (6 1/2 FT)(1985-87)	467911
	17.505	**SHIELD**, SI PNL-RH (6 1/2 FT)(1985-87)	467912
13.	17.405	**SILL**, RR CR	15628612
14.	8.913	**SCREW**, PAN HD TORX (1/4-20X5/8, 275M)	14010976
15.	8.977	**SCREW**, PAN HD C/REC TAP (#10-16X1/2, CAD)	9437761
16.	17.225	**BUMPER**, END GATE LINK (9.786)	6262029
17.	17.202	**BUMPER**, END GATE	14032787
18.	17.507	**SHIELD**, BODY SI PNL STONE-LH (PLASTIC)	14027529
	17.507	**SHIELD**, BODY SI PNL STONE-RH (PLASTIC)	14027530
19.	16.570	**BUMPER**, F/TNK FIL DR (3.705)	14010707
20.	16.570	**DOOR**, FUEL TANK FIL	14052026
	16.570	**SPRING**, FUEL TANK FILLER DR HGE (12.945)	4813235
	16.570	**PIN**, FUEL TANK FIL DR HGE	476907
21.	8.900	**BOLT**, HEX LG FL WA (5/16-18X.88, 275M POR)	12337916
22.	8.921	**NUT**, U-SHAPE 5/16-18 A=1.25,B=.68,C=.84PNL RANGE=.025 1.150 POR	12338146
23.	17.505	**PANEL**, SI PNL W/H-LH (W/DUAL WHLS)	330393
	17.505	**PANEL**, SI PNL W/H-RH (W/DUAL WHLS)	330394
24.	8.929	**WASHER**, FL (.344X.688X.065)	120393
25.	8.977	**SCREW**, TRI LOB HEX W/FL WA,M8X1.25X20,PO	11515358
26.	8.203	**FENDER**, RR-LH (W/DUAL WHLS)	15606405
	8.203	**FENDER**, RR-RH (W/DUAL RR WHLS)	15606406
27.	8.212	**BRACKET**, R/FDR RR (W/R05)(1987-90)	15606404
28.	8.977	**SCREW**, HEX W/FL WA (M8X2.12X30 POR)	11504765
29.	16.400	**PLUG**, PICKUP BOX SI PNL HOLE	14010953
30.	16.157	**INSULATOR**, END GATE LAT REM CONT ROD	14007449
31.	17.198	**ROD**, END GATE LAT OPER	14021389
32.	17.204	**HANDLE**, END GATE LAT OPER	15569031
33.	17.185	**GATE**, PUBX END((CHEV))	15628608
	17.185	**GATE**, PUBX END((GMC))	15628610
34.	3.015	**BOLT**, HEX W/CONN WA (3/8-16X1.25, POR)	6271980
35.	17.208	**HINGE**, END GATE-LH	15596975
	17.208	**HINGE**, END GATE-RH	15596976
36.	17.208	**HINGE**, END GATE LH	14021385
	17.208	**HINGE**, END GATE RH	14021386
37.	17.225	**PLATE**, W/LINK & STRIKER, END GATE-LH	458025
	17.225	**PLATE**, W/LINK & STRIKER, END GATE-RH	458026
38.	17.198	**LATCH**, END GATE-LH	15594643
	17.198	**LATCH**, END GATE-RH	15594644
39.	17.198	**CLIP**, T/GATE LATCH OPER ROD	3889864
40.	8.913	**SCREW**, PAN HD C/REC W/CON WA (.312-18X.75, ZC)	9431663

RPO DEFINITIONS
R05-WHEEL CONVERSION/DUAL REAR.

© 1990 GENERAL MOTORS SERVICE PARTS OPERATIONS—LIGHT TRUCK 52R

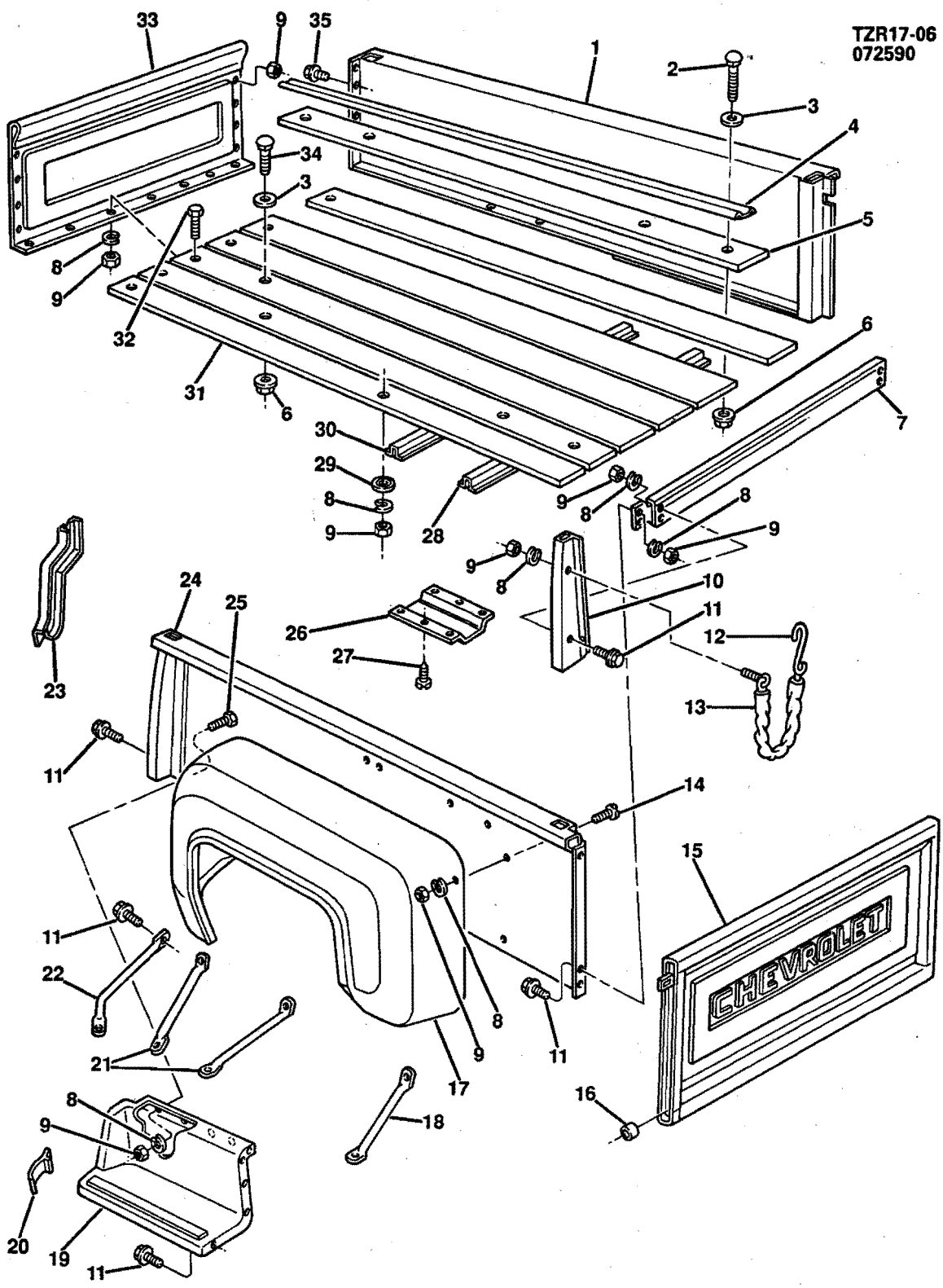
TZR17-06
072590
CHEVROLET
TZR17-06

1985-1986 CK(03) PICKUP BOX/STEPSIDE
1987 RV(03) PICKUP BOX/STEPSIDE

1.	17.505	**PANEL**, PUBX SI-LH	15591005
	17.505	**PANEL**, PUBX SI-RH	15591006
2.	9.008	**BOLT**, PUBX BODY, RD HD SQ NK (1/2"-13X4 1/4")(NYLOC)	15599971
3.	17.090	**WASHER**, PUBX BODY	14013723
4.	17.442	**IRON**, FLR BRD WEAR (UNIV)(CUT AS REQ)	3847382
5.	17.400	**BOARD**, FLR (CUT AS REQ)	3765739
6.	8.915	**NUT**, HEX 1/2X.315 286M 71,500 PSI CB BRT	9439586
	8.929	**WASHER**, SPL FL (17/32X1 1/4X1/8)	3983589
7.	17.405	**SILL**, RR CR	14043989
8.	8.931	**WASHER**, MET REG HELICAL LK M8	9439511
9.	8.915	**NUT**, HEX(5/16-18X.25 286M POR)	9439493
10.	17.462	**POCKET**, RR STAKE-LH	14026331
	17.462	**POCKET**, RR STAKE-RH	14026332
11.	8.900	**SCREW**, (5/16-18 X 7/8 W/CON WA AC PT 275M)	3846202
12.	17.225	**CHAIN**, END GATE-LH	3810823
	17.225	**CHAIN**, END GATE-RH	3810824
13.	17.225	**COVER**, END GATE CHAIN	3810750
14.	8.913	**SCREW**, PAN C/R (5/16-18X.75 1010 CAD BRT)	9437685
15.	17.185	**GATE**, PUBX END (CHEV)	14026349
	17.185	**GATE**, PUBX END (GMC)	14026356
16.	17.208	**TRUNNION**, END GATE HGE	3810706
17.	8.203	**FENDER**, RR-LH	14073933
	8.203	**FENDER**, RR-RH (EXC AUX TK)	14027366
	8.203	**FENDER**, RR-RH (W/AUX TK)	14073934
18.	8.212	**BRACE**, RR FDR RR	6274908
19.	8.225	**BOARD**, RUN-LH (6 1/2')	6264181
	8.225	**BOARD**, RUN-RH (6 1/2')	6264182
	8.225	**BOARD**, RUN-LH (8')	347621
	8.225	**BOARD**, RUN-RH (8')	347622
20.	N.S.	**SHIELD**, STONE	
21.	8.212	**BRACE**, RR FDR CTR	6274905
22.	8.212	**BRACE**, RR FDR FRT-LH	375119
	8.212	**BRACE**, RR FDR FRT-RH	375120
23.	8.228	**HANGER**, RUN BRD-LH	6272669
	8.228	**HANGER**, RUN BRD-RH	6272670
25.	8.900	**BOLT**, HEX (5/16-18X3/4,.61-THD LEN 280M PS)	9440967
26.	N.S.	**SHIELD**, FLOOR BOARD HEAT	
27.	8.977	**SCREW**, PAN HD C/R TAP W/FL WA (M4.2X1.41X20 FL 12.5)	11508869
28.	17.405	**SILL**, CROSS (#1,2,3,4,5)	14039857
29.	8.929	**WASHER**, FL (.343X1..25X1/16 ZINC)	9418924
30.	17.405	**REINFORCEMENT**, FLOOR BOARD	14026313
31.	17.400	**PLATFORM** (6 1/2')(INCL #7,8,14,24,26,27)	15554977
	17.400	**PLATFORM**, (8')(INCLS #7,8,14,24,26,27)	15554976
32.	8.903	**BOLT**, RD HD SQ NK (5/16"-18X1 1/2")	
33.	17.455	**PANEL**, PICKUP BOX FRT	14027365
34.	9.008	**BOLT**, PUBX BDY, RD HD SQ NK (1/2"-13X10 5/8")(NYLOC)	14013721
35.	8.900	**BOLT**, HEX 5/16-18X7/8 .741-THD LEN 300MPC	9425117
	8.931	**WASHER**, SPR LK 5/16 PL	9439511

© 1990 GENERAL MOTORS SERVICE PARTS OPERATIONS—LIGHT TRUCK 52R

TZR17-07
071890

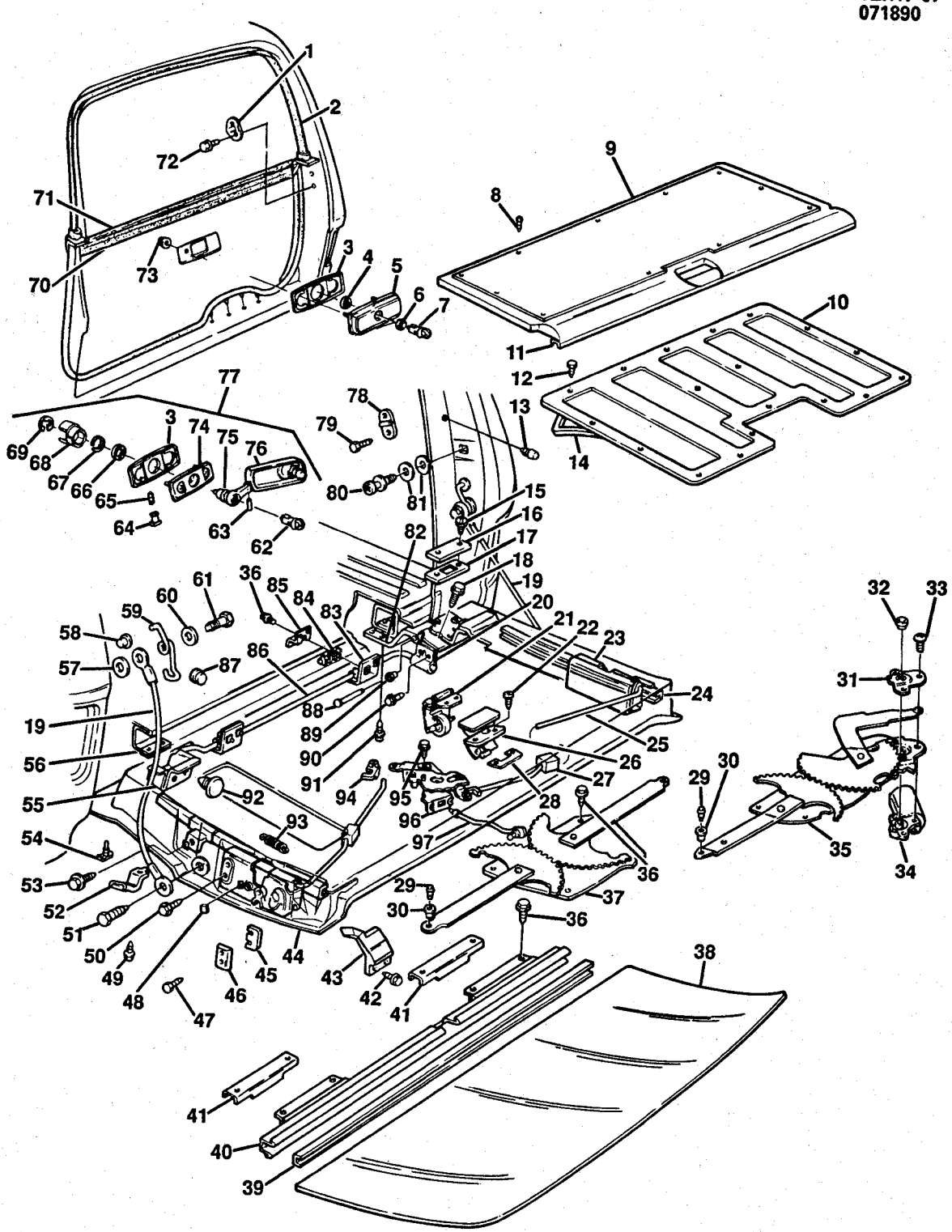

TZR17-07

© 1990 GENERAL MOTORS SERVICE PARTS OPERATIONS—LIGHT TRUCK 52R

1985-1986 CK(06) ENDGATE
1987-1991 RV(06) ENDGATE

1.	17.204	**BUMPER**, END GATE	337817
2.	17.185	**WEATHERSTRIP**, END GATE	15594665
3.	16.270	**GASKET**, WDO REG HDL	15606479
4.	17.198	**BEZEL**, WDO REG LK CYL (W/ELEC WDO)(12.195)	5713260
5.	17.204	**ESCUTCHEON**, WDO REG LK CYL (W/ELEC WDO)(12.195)	9713781
6.	16.328	**GASKET**, LK CYL (12.247)	15646921
7.	17.198	**LOCK**, END GATE SAF (W/ELEC WDO)(12.248)(1985-86)	6259467
	17.198	**LOCK**, END GATE (W/SWITCH)(W/ELEC T/GATE WDO)(1987-88)	6259511
	17.198	**LOCK**, E/GATE(W/SWITCH (1989-91))	15618884
8.	8.977	**SCREW**, OV HD & FIN WA (M4.2X1.41X25)	11501167
9.	17.185	**PANEL**, TR (SEE CATALOG)	
10.	17.185	**COVER**, WDO REG ACC HOLE	6274995
11.	17.190	**WEATHERSTR**, GLS INR (W/YE9)	14049971
12.	8.977	**SCREW**, PN HD TORX TAP (M4.2X1.41X13)	11504646
13.	17.202	**BUMPER**, END GATE	335453
14.	17.185	**SEAL**, REG ACC HOLE CVR	334286
15.	8.900	**SCREW**, PAN HD C/REC TAP (1/4-20X5/8, 280M)	180018
16.	17.185	**COVER**, HGE ACC HOLE	6274993
17.	17.185	**SEAL**, HGE ACC HOLE CVR	6274994
18.	8.900	**BOLT**, HEX (3/8-16X5/8)	
	8.931	**WASHER**, LK (3/8)	
19.	17.202	**SUPPORT**, GATE (12.203)(1985-88)	15599489
	17.202	**SUPPORT**, END GATE (12.203)(1989-91)	15641731
20.	17.202	**RETAINER**, TORQ ROD-RH	326152
21.	17.198	**LEVER**, REM CONT BLOCKOUT	339984
22.	17.198	**BOLT**, LAT REM CONT HDL (12.242)	8782501
23.	17.198	**LATCH**, END GATE-LH (INCL #37,51)	14039701
	17.198	**LATCH**, END GATE-RH (INCL #37,51)	14039702
24.	17.190	**CHANNEL**, WDO GLS-LH	14051899
	17.190	**CHANNEL**, WDO GLS-RH	326162
25.	17.198	**ROD**, CONT-LH	14039707
	17.198	**ROD**, CONT-RH	14039708
26.	17.204	**HANDLE**, REM CONT (12.242)	4495180
27.	16.157	**INSULATOR**, CONT ROD	14007449
28.	17.204	**GASKET**, LAT REM CONT HDL	470993
29.	16.261	**PIN**, WDO REG RLR (12.195)	12338147
30.	16.261	**ROLLER**, WDO REG (12.195)	4158245
31.	16.263	**PLATE** (INCL #95)(12.195)	5718404
32.	16.263	**BUSHING**, REG MTR SHF	5718406
33.	N.S.	**SCREW**, RD HD C/REC W/EXT TTH LK WA (1/4-20X1/2)	
34.	16.263	**MOTOR**, REG (W/ELEC WDO)	22048329
35.	16.260	**REGULATOR** (W/ELEC WDO)	6258117
36.	8.900	**BOLT**, HEX W/CON WA (1/4-20X5/8)	
37.	16.260	**REGULATOR**, WDO (EXC ELEC WDO)	327946
38.	17.190	**GLASS**, END GATE WDO (SEE CATALOG)	
39.	16.190	**FILLER**, GLS CHANNEL (SEE CATALOG)	
40.	17.190	**SASH**, WDO GLS	14049998
41.	16.261	**CAM**, WDO GLS (10.792)	20171141
42.	8.977	**SCREW**, HEX WA HD TAP (#10-16X3/4)	9437761
43.	17.185	**WEATHERSTRIP**, UPR CORNER-LH	14049967
	17.185	**WEATHERSTRIP**, UPR CORNER-RH	14049968
44.	17.185	**GATE**, END	15618424
45.	17.204	**SPACER**, WEDGE PLATE	347631
46.	17.204	**BUMPER**, WEDGE (ON GATE)	14021298
47.	8.977	**SCREW**, TRUSS HD C/R (1/4-20X7/8)	9440202
48.	17.225	**BUMPER**, LAT CAM (16.332)	
49.	8.900	**BOLT**, HEX (5/16-18X5/8,280MM)	180075
	8.931	**WASHER**, LK (5/16)	9439511
50.	8.900	**BOLT**, HEX (3/8-16X3/4)	180120
	8.931	**WASHER**, LK (3/8)	9439512
51.	17.202	**BOLT**, SUPT LWR (12.184)	7740373
52.	17.202	**RETAINER**, TORQ ROD-LH	341934
53.	17.185	**BOLT**, WDO GLS CHAN	7663699
54.	N.S.	**FASTENER**, TORQ ROD INSL	
55.	N.S.	**POCKET**, HINGE (PART OF #48)	
56.	17.202	**INSULATOR**, TORQ ROD	341933
57.	17.198	**WASHER**, E/GATE SUPPORT (1.56X.39.075)	15569033
58.	17.208	**PLUG**, SUPT SPR	3738197
59.	17.202	**SPRING**, SUPT-LH	15641773
	17.202	**SPRING**, SUPT-RH	335480
60.	8.929	**WASHER**, PLAIN .531 CZ	120396
61.	17.202	**BOLT**, SUPT UPR (12.184)	7740374

© 1990 GENERAL MOTORS SERVICE PARTS OPERATIONS—LIGHT TRUCK 52R

62.	17.198	**CYLINDER**, END GATE LK (EXC ELEC WDO)(12.248)	338285
63.	17.204	**PIN**, WDO REG HDL (12.195)	5717887
64.	16.260	**PAWL**, WDO REG CLU	5713268
65.	16.260	**SPRING**, CLU PAWL (12.195)	4303911
66.	17.204	**WASHER**, DRIVE (12.195)	5713274
67.	17.204	**RETAINER**, DRIVE (12.195)	5713276
68.	16.260	**CLUTCH**, WDO REG	9702916
69.	8.934	**RING**, TYPE TE (1/4)	9431762
70.	17.190	**WEATHERSTRIP**, WDO GLS OTR	349896
71.	17.190	**WEATHERSTR**, WDO GLS INR (EXC YE9)	14049969
72.	8.900	**BOLT**, HEX (1/4-20X5/8)	
73.	8.915	**NUT**, HEX (1/4-20, 286M ZOR)	9439519
74.	N.S.	**BODY**, HDL (PART OF #87)	
75.	17.204	**DRIVER**, WDO REG (12.195)	9703346
76.	17.204	**HANDLE**, WDO REG (12.195)	9703344
77.	17.204	**HANDLE** (INCL #76,77,79,83,84,88)	335566
78.	17.204	**BUMPER**, WGE (ON BODY)	337817
79.	8.900	**BOLT**, HEX (1/4-20X5/8)	
80.	17.198	**STRIKER**, END GATE	6273622
81.	17.198	**WASHER**, STRIKER	6273619
82.	17.208	**HINGE**, GATE (INCL #35,36)	337787
83.	N.S.	**PLATE**, TORQ ROD (PART OF #48)	
84.	17.202	**INSULATOR**, TORQ ROD	334294
85.	17.202	**RETAINER**, TORQ ROD CTR	326153
86.	17.202	**ROD**, TORQ	14070538
87.	8.973	**PLUG**, BUTTON (1")	14049810
88.	17.208	**PIN**, HINGE BUSH	6271989
89.	17.208	**BUSHING**, HGE PIN	335524
90.	8.900	**BOLT**, HEX (5/16-18X3/4)	
91.	8.977	**SCREW**, HEX HD TAP (3/8-16X1 1/8)	
92.	17.190	**BUMPER**, WDO GLS (12.212)	8785295
93.	N.S.	**SPRING** (PART OF #17)	
94.	17.198	**CLIP**, CONT ROD	15545178
95.	17.198	**SCREW**, LAT ROD ADJ	9718487
96.	17.198	**LOCK**, LAT	14039709
97.	17.198	**ROD**, REM CONT HDL	327953

RPO DEFINITIONS
A33-WINDOW/ELECTRIC CONTROL,TAILGATE OR BACK DOOR
YE9-EQUIPMENT PACKAGE/COMFORT, CONVENIENCE & DECOR.

© 1990 GENERAL MOTORS SERVICE PARTS OPERATIONS—LIGHT TRUCK 52R

NOTES

BLANK PAGE

© 1990 GENERAL MOTORS SERVICE PARTS OPERATIONS—LIGHT TRUCK 52R

TZR17-08
072590

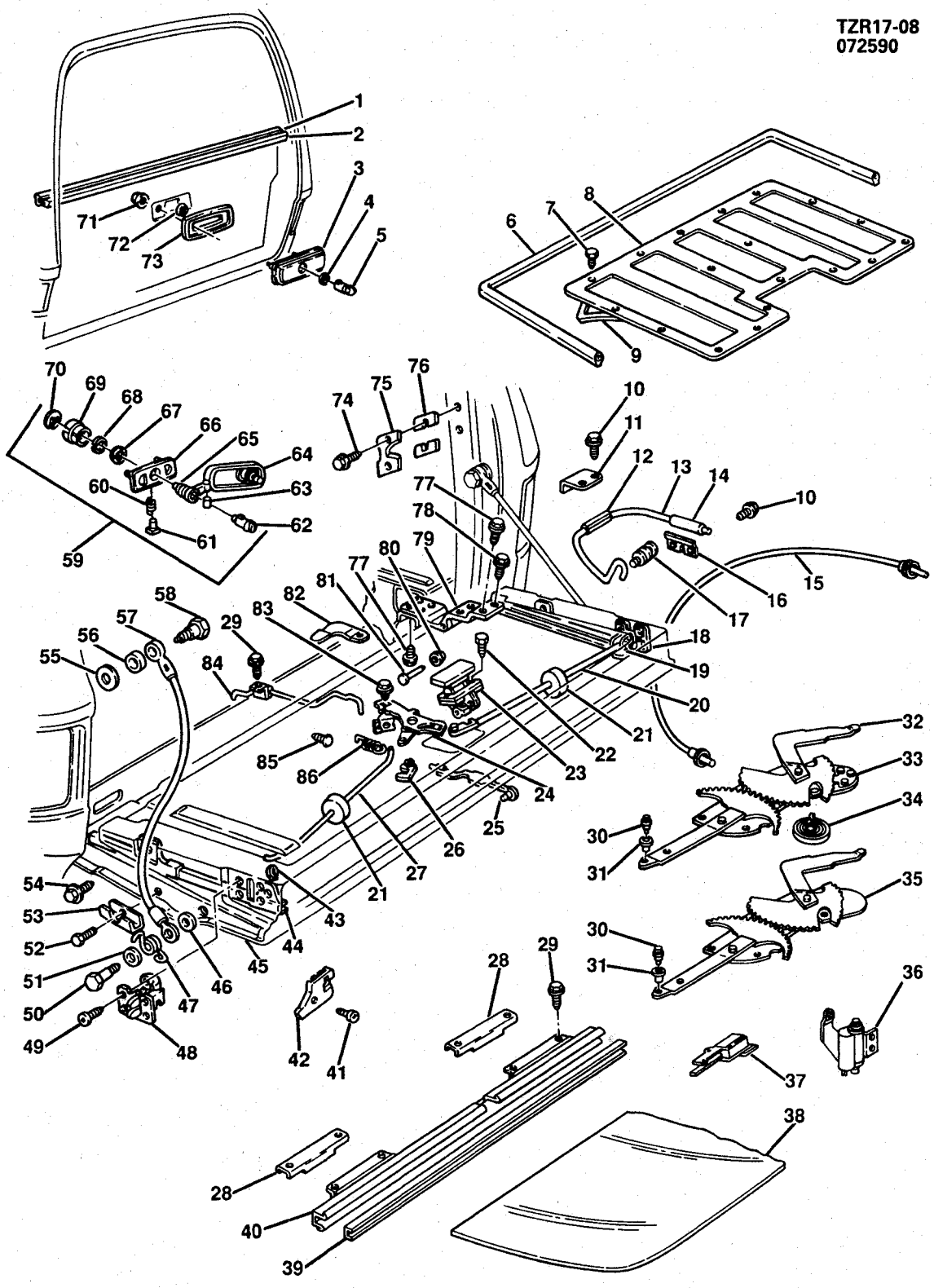

TZR17-08

1985-1986 K(16) ENDGATE
1987-1991 V(16) ENDGATE

1.	17.190	**WEATHERSTRIP**, WDO GLS INR	327006
2.	17.190	**WEATHERSTRIP**, WDO GLS OTR	327005
3.	17.204	**ESCUTCHEON**, WDO REG SAF LK CYL (12.195)	9713781
4.	16.328	**GASKET**, DR SAF LK CYL	4587931
5.	17.198	**LOCK**, END GATE SAF (W/ELEC WDO)(12.248)	6259467
6.	17.185	**WEATHERSTRIP**, END GATE	326934
7.	8.977	**SCREW**, PAN HD C/REC TAP (M4.2X1.41X13)	11504646
8.	17.185	**COVER**, WDO REG ACC HOLE	6274890
9.	17.185	**SEAL**, WDO REG ACC HOLE CVR (LH & RH)	15593570
	17.185	**SEAL**, WDO REG ACC HOLE CVR (CENTER)	15593571
10.	8.977	**SCREW**, HEX W/CON WA (1/4-20X5/8)	9439771
11.	17.202	**RETAINER**, TORQ ROD	6274854
12.	17.202	**INSULATOR**, TORQ ROD-LH	334103
	17.202	**INSULATOR**, TORQ ROD-RH	334104
13.	17.202	**ROD**, TORQ-LH	15628735
	17.202	**ROD**, TORQ-RH	15628736
14.	17.202	**INSULATOR**, TORQ ROD	6274853
15.	16.261	**CABLE**, END GATE WDO REG (1985-88)(W/ELEC WDO)	15606445
	16.261	**CABLE**, END GATE WDO REG (1989-91)(W/ELEC WDO)	15646923
16.	17.202	**BRACKET**, TORQ ROD	337899
17.	17.202	**STUD**, TORQ ROD ANC	473894
18.	17.198	**ROD**, END GATE-RH	14039710
19.	17.198	**CLIP**, LAT REM CONT ROD	15545178
20.	17.198	**ROD**, LAT REM CONT-RH	14039716
21.	16.157	**INSULATOR**, LAT ROD	14007449
22.	17.198	**BOLT**, LAT REM CONT HDL (12.242)	8782501
23.	17.204	**HANDLE**, LAT CONT (12.242)	4495180
	17.204	**GASKET**, LAT CONT HDL	470993
24.	17.198	**LOCK**, LAT	14039712
25.	17.198	**ROD**, REM CONT HDL (12.242)	8742340
26.	17.198	**CLIP**, LAT ROD	15545178
27.	17.198	**ROD**, LAT REM CONT-LH	473917
28.	16.261	**CAM**, WDO GLS (10.792)	20171141
29.	N.S.	**SCREW**, HEX (1/4-20X1/2)	
30.	16.261	**ROLLER**, WDO REG (12.195)	4158245
31.	16.261	**PIN**, WDO REG RLR (12.195)	4158246
32.	16.260	**REGULATOR**, WDO (LESS TRANS)(W/ELEC WDO)	15616297
33.	16.260	**TRANSMISSION**, WDO REG (W/ELEC WDO)	15534873
34.	16.260	**SPRING**, WDO REG (W/ELEC WDO)	475495
35.	16.260	**REGULATOR**, END GATE WDO (EXC ELEC WDO)(1985-89)	15641780
36.	16.263	**MOTOR**, W/BRKT, PWR WDO	22073442
37.	16.263	**SWITCH**, MOTOR CUT OUT	469341
38.	17.190	**GLASS**, END GATE WDO(TINTED)	14026489
	17.190	**GLASS**, END GATE WDO(DEEP TINT)	15531501
39.	16.190	**FILLER**, GLS CHANNEL(.047X100')(CUT AS REQD)	370390
40.	17.190	**SASH**, WDO REG	340053
41.	8.977	**SCREW**, OV HD C/REC (#10-16X3/4)	
42.	17.202	**CAP**, GLS GUIDE CHAN-LH	15522707
	17.202	**CAP**, GLS GUIDE CHAN-RH	15522708
43.	16.332	**CLIP**, LAT REM CONT ROD	3905674
44.	17.190	**CHANNEL**, WDO GLS-LH	470949
	17.190	**CHANNEL**, WDO GLS-RH	6274836
45.	17.185	**GATE**, END	15571691
46.	8.929	**WASHER**, FL (15/32X15/16X1/16, ZP)	120395
47.	17.202	**SPRING**, SUPT-LH	14021315
	17.202	**SPRING**, SUPT-RH	14021316
48.	17.198	**LATCH**, END GATE-LH	473995
49.	8.908	**SCREW**, FL SERR HD C/REC MA (.250-20X.625, PEOR)	9439772
50.	17.202	**BOLT**, SUPT LWR	14021317
51.	8.929	**WASHER**, MET (15X24X1 PC)	11041252
52.	8.977	**SCREW**, PAN HD C/REC TAP (M4.2X1.41X16, POR)	11504736
53.	17.208	**GUIDE**, SUPT	334132
54.	8.977	**SCREW**, HEX W/CON WA (1/4-20X.62, 275M PZOR)	
55.	17.189	**WASHER**, E/GATE SUPPORT	15569033
56.	17.202	**SPACER**, SUPT	14021292
57.	17.202	**SUPPORT**, END GATE	6274850
58.	17.202	**BOLT**, SUPT UPR	7740374
59.	17.204	**HANDLE** (INCL #63,64,65,66,67,68)(1985-89)	335566
60.	16.260	**SPRING**, CLU PAWL (12.195)(1985-89)	4303911
61.	16.260	**PAWL**, WDO REG CLU(1985-89)	5713268
62.	17.198	**CYLINDER**, END GATE LK (12.248)(EXC ELEC WDO)(1985-89)	338285
63.	17.204	**PIN**, WDO REG HDL (12.195)(1985-89)	5717887

© 1990 GENERAL MOTORS SERVICE PARTS OPERATIONS—LIGHT TRUCK 52R

64.	17.204	**HANDLE**, WDO REG (12.195))(1985-89)	9703344
65.	17.204	**DRIVER**, WDO REG (12.195)(1985-89)	9703346
66.	N.S.	**BODY**, REG HDL (PART OF #85)(1985-89)	
67.	17.204	**WASHER**, REG DRIVE (12.195)(1985-89)	5713274
68.	17.204	**RETAINER**, WDO REG DRIVE (12.195)(1985-89)	5713276
69.	16.260	**CLUTCH**, WDO REG(1985-89)	9702916
70.	8.934	**RING**,TYPE TE #25	9431762
71.	8.915	**NUT**, HEX (1/4-20)	9439519
72.	17.198	**BEZEL**, WDO REG LK CYL (12.195)(W/ELEC WDO)	5713260
73.	17.204	**BEZEL**, WDO REG HDL	327015
74.	8.900	**BOLT**, HEX (5/16-18X7/8)	9442184
	8.931	**WASHER**, LK (5/16)	9439511
75.	17.198	**STRIKER**, END GATE-LH	6274847
	17.198	**STRIKER**, END GATE-RH	6274848
76.	17.198	**SPACER**, LAT STRIKER	6274849
77.	8.900	**BOLT**, HEX (3/8-16X7/8)	9442119
	8.931	**WASHER**, LK (3/8)	9439512
78.	8.900	**BOLT**, HEX SERR FLG (3/8-16X1)	9437242
79.	17.208	**HINGE**, GATE (INCL #66,68)	337788
80.	17.208	**BUSHING**, HGE PIN	335524
81.	17.208	**PIN**, HINGE BUSH (10.466)	6271989
82.	17.225	**STOP**, LAT BLOCKOUT ROD	335452
83.	17.198	**SCREW**,END GATE LATCH REM(LH THD)	9718487
84.	17.198	**ROD**, LAT BLOCKOUT	331638
85.	17.190	**BUMPER**, WDO GLS (12.212)	8785295
86.	17.198	**SPRING**, LAT BLOCKOUT	15593866

© 1990 GENERAL MOTORS SERVICE PARTS OPERATIONS—LIGHT TRUCK 52R

NOTES

BLANK PAGE

TZR17-01
062790

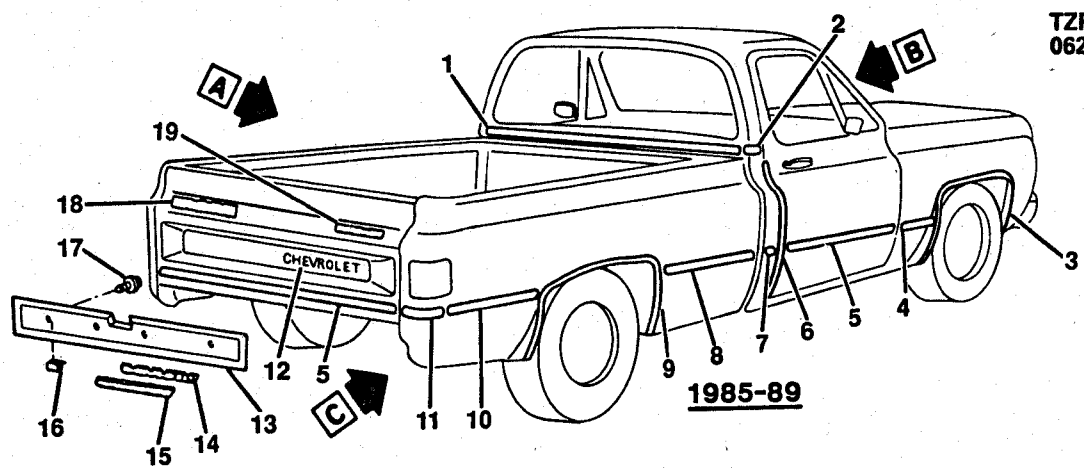

1985-89

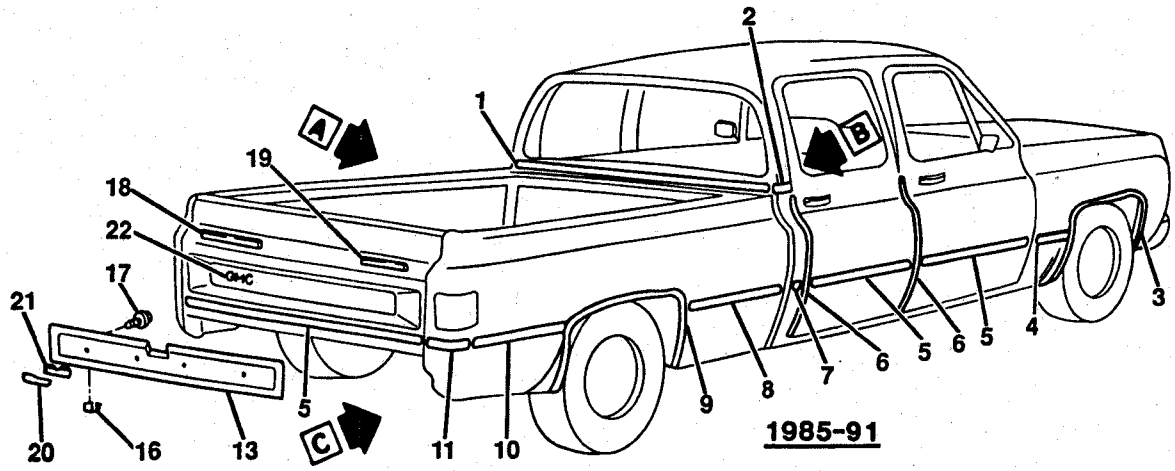

1985-91

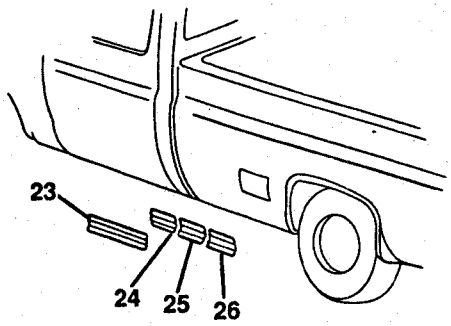

VIEW A

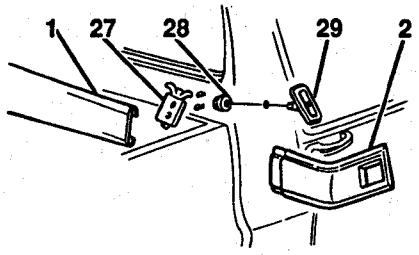

VIEW B
1985-88

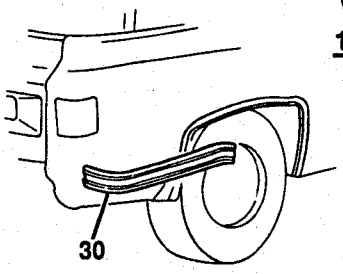

VIEW C

TZR17-01

1985-1986 CK(03-43) MOLDINGS
1987-1991 RV(03-43) MOLDINGS

NOTE: B84-ORNAMENTATION/EXTRA MLDG BODY SIDE.
NOTE: B85-ORNAMENTATION/EXTRA MLDG BELT REVEAL.
NOTE: BX6-ORNAMENTATION/EXTRA MLDG APLQ CAB BACK PNL.
NOTE: E62-EQUIPMENT/STEPSIDE PICKUP BOX.
NOTE: E63-EQUIPMENT/FLEETSIDE PICKUP BOX.
NOTE: B84 MOLDINGS HAVE BLACK CENTER, B85 MOLDINGS HAVE BRIGHT CENTER.

1.	17.507	**MOLDING**, BODY RR UPR (W/BX6)(1985-88)	14027354
2.	17.507	**MOLDING**, BDY RR OTR PNL UPR-LH (BOW TIE)(INCL #28,29) (1985-88)	14029979
	17.507	**MOLDING**, BDY RR OTR PNL UPR-RH (BOW TIE)(INCL #28,29) (1985-88)	14029980
	17.507	**MOLDING**, BDY RR OTR PNL UPR-LH (GMC)(INCL #28,29) (1985-88)	14029981
	17.507	**MOLDING**, BDY RR OTR PNL UPR-RH (GMC)(INCL #28,29) (1985-88)	14029982
	17.507	**MOLDING**, BDY RR OTR PNL UPR-LH (CAMPER)(INCL #28,29) (1985-88)	14029983
	17.507	**MOLDING**, BDY RR OTR PNL UPR-RH (CAMPER)(INCL #28,29) (1985-88)	14029984
3.	8.132	**MOLDING**, F/FDR WHL OPG-LH	14022805
	8.132	**MOLDING**, F/FDR WHL OPG-RH	14022806
4.	8.132	**MOLDING**, F/FDR SI LWR RR-LH (B84)(1985-88)	15596905
	8.132	**MOLDING**, F/FDR SI LWR RR-RH (B84)(1985-88)	15596906
	8.132	**MOLDING**, F/FDR SI LWR RR-LH (B85)(1989-91)	15596907
	8.132	**MOLDING**, F/FDR SI LWR RR-RH (B85)(1989-91)	15596908
5.	17.215	**MOLDING**, F/D, R/D, T/GATE (B84)(*1)	15596953
	17.215	**MOLDING**, F/D, R/D, T/GATE (B85)(*1)	15596954
6.	21.445	**MOLDING**, DR EDGE GUARD (1985-86)	995118
	16.445	**GUARD**, F/D, R/D EDGE-LH	14072891
	16.445	**GUARD**, F/D, R/D EDGE-RH	14072892
7.	17.507	**MOLDING**, BODY SI (B84)(1985-87)(*2)	15596935
	17.507	**MOLDING**, BODY SI (B85)(1988-91)(*2)	15596939
8.	17.507	**MOLDING**, PUBX SI FRT-RH (6.5' BOX)(B84)(1985-87)	15596936
	17.507	**MOLDING**, PUBX SI FRT-RH (6.5' BOX)(B85)(1985-87)	15596942
	17.507	**MOLDING**, PUBX SI FRT-RH (8' BOX)(B84)(1987-88)	15596938
	17.507	**MOLDING**, PUBX SI FRT-RH (8' BOX)(B85)	15596942
9.	17.507	**MOLDING**, RR WHL OPG-LH	6273599
	17.507	**MOLDING**, RR WHL OPG-RH	6273600
10.	17.507	**MOLDING**, PUBX SI RR-LH (6.5' BOX)(B84)(1985-87)	15596931
	17.507	**MOLDING**, PUBX SI RR-RH (6.5' BOX)(B84)(1985-87)	15596932
	17.507	**MOLDING**, PUBX SI RR-LH (6.5' BOX)(B85)(1985-87)	15596957
	17.507	**MOLDING**, PUBX SI RR-RH (6.5' BOX)(B85)(1985-87)	15596934
	17.507	**MOLDING**, PUBX SI RR-LH (8' BOX)(B84)(1985-87)	15596955
	17.507	**MOLDING**, PUBX SI RR-RH (8' BOX)(B84)(1985-87)	15596956
	17.507	**MOLDING**, PUBX SI RR-LH (8' BOX)(B85)(1985-91)	15596957
	17.507	**MOLDING**, PUBX SI RR-RH (8' BOX)(B85)(1985-91)	15596958
11.	17.507	**MOLDING**, PUBX SI RR COR-LH (B84)(1985-88)	14027593
	17.507	**MOLDING**, PUBX SI RR COR-RH (B84)(1985-88)	14027594
	17.507	**MOLDING**, PUBX SI RR COR-LH (B85)(1985-91)	14027597
	17.507	**MOLDING**, PUBX SI RR COR-RH (B85)(1985-91)	14027598
	17.507	**RETAINER**, PUBX SI RR MLDG	14018564
	17.507	**RETAINER**, RR CORNER LWR MLDG (1985-87)	14022856
	17.507	**SPACER**, RR CORNER MLDG SI (1987-88)	15606343
	17.507	**RETAINER**, RR CORNER MLDG RR (1988-89)	3917954
	8.977	**SCREW**, FL HD C/R TAP (4X24X3/8)	4492963
12.	17.215	**DECAL**, T/GATE "CHEV" (WHITE)(W/E62)(1985-87)	15598771
	17.215	**DECAL**, T/GATE "CHEV" (BLACK)(W/E62)(1985-87)	15598772
	17.215	**DECAL**, T/GATE "CHEV" (WHITE)(W/E63)(1988-91)	15598775
	17.215	**DECAL**, T/GATE "CHEV" (BLACK)(W/E63)(1988-91)	15598776
13.	17.215	**PANEL**, T/GATE TR (CHEV)(INCL #14,15)	14027521
	17.215	**PANEL**, T/GATE TRIM (GMC)(INCL #20,21)(1985-88)	14027522
	17.215	**PANEL**, E/GATE EXTR TR (GMC)(1989-91)	15616913
14.	17.215	**GASKET**, T/GATE NM PLT (CHEV)(1985-90)	14051874
15.	17.215	**PLATE**, T/GATE NM (CHEV)(1985-90)	14027523
16.	8.921	**NUT**, U-SHAPE (M6.3X1.81)	11509582
17.	8.977	**SCREW**, PAN HD TORX (M6.3X1.81X25)	11504649
18.	17.215	**EMBLEM**, BODY "FUEL INJECTION" (1987-88)	15554973
19.	17.215	**PLATE**, "DIESEL 6.2L" NAME (1985-88)	14043698
20.	17.215	**PLATE**, T/GATE TRIM PNL NAME (GMC)(1985-88)	14027524
21.	17.215	**GASKET**, T/GATE TRIM PNL NAME PLT (GMC)(1985-88)	14051875
22.	17.215	**DECAL**, T/GATE "GMC" (WHITE)(W/E62)(1985-87)	15598773
	17.215	**DECAL**, T/GATE "GMC" (BLACK)(W/E62)(1985-87)	15598774
	17.215	**DECAL**, T/GATE "GMC" (WHITE)(W/E63)(1985-91)	15598777
	17.215	**DECAL**, T/GATE "GMC" (BLACK)(W/E63)(1985-91)	15598778
23.	17.507	**MOLDING**, BODY SI (B84)(8' BOX)(1985-87)(*3)	15596935
	17.507	**MOLDING**, BODY SI (B85)(8' BOX)(1985-91)(*3)	15596939
24.	17.507	**MOLDING**, BODY SI (B84)(6.5' BOX)(1985-87)(*2,3)	15596935

© 1990 GENERAL MOTORS SERVICE PARTS OPERATIONS—LIGHT TRUCK 52R

24.	17.507	**MOLDING**, BODY SI (B85)(6.5' BOX)(1985-90)(*2,3)	15596939
25.	17.507	**MOLDING**, FUEL TANK FILLER DOOR (B84)(1985-87)(*2,3)	15596935
	17.507	**MOLDING**, FUEL TANK FILLER DOOR (B85)(1985-86)(*2,3)	15596939
26.	17.507	**MOLDING**, BODY SI-LH (B84)(1985-87)	15596943
	17.507	**MOLDING**, BODY SI-RH (B84)(1985-87)	15596938
	17.507	**MOLDING**, BODY SI-LH (B85)(1988-91)	15596945
	17.507	**MOLDING**, BODY SI-RH (B85)(1988-91)	15596946
27.	17.507	**RETAINER**, BODY RR MLDG (1985-88)	14027379
28.	8.921	**NUT**, STMP (#10-24X1/2 FLG OD)	9426926
29.	17.507	**RETAINER**, BODY SI UPR MLDG (1985-88)	14027378
30.	N.S.	**MOLDING**, (RET TYPE NOT SERVICED, USE MLDGS #10,11)	

NOTE 1: NUMBERS LISTED ARE EXACT LENGTH (66.4") FOR T/GATE APPLICATION, MUST BE ORDERED & CUT TO LENGTH FOR FRT & RR DOOR APPLICATION.
NOTE 2: NUMBERS LISTED ARE 20.24" LONG & MUST BE ODERED & CUT TO LENGTH FOR THESE POSITIONS.
NOTE 3: USED ALSO ON RH SIDE WITH DUAL TANK OPTION (NL2).

© 1990 GENERAL MOTORS SERVICE PARTS OPERATIONS—LIGHT TRUCK 52R

TZR17-03
062890

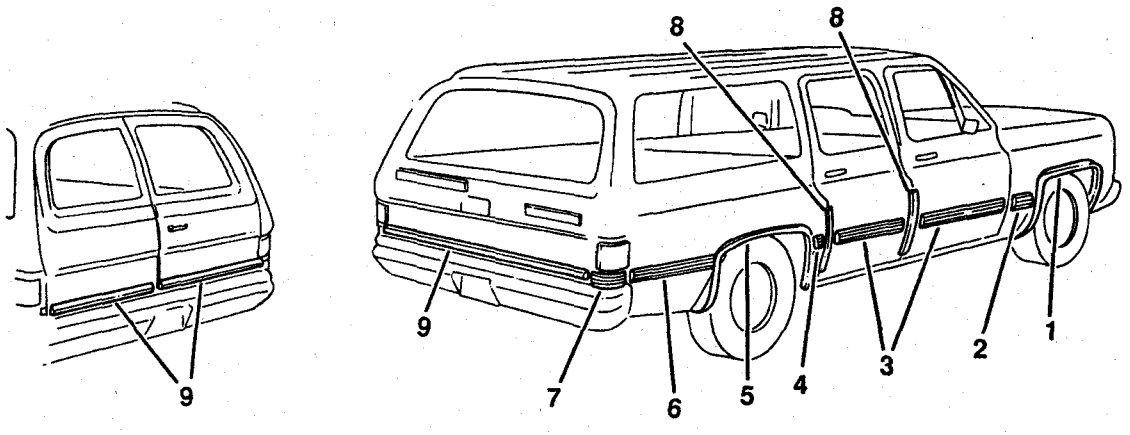

TZR17-03

1989-1991 RV(06) MOLDINGS (W/B85,B93,B96)

1.	8.132	**MOLDING KIT**, FRT FDR WHL HSG-LH (W/B96)	15616313
	8.132	**MOLDING KIT**, FRT FDR WHL HSG-RH (W/B96)	15616312
2.	8.132	**MOLDING**, FRT FDR LWR RR-LH (W/B85)	15628787
	8.132	**MOLDING**, FRT FDR LWR RR-RH (W/B85)	15628788
3.	17.507	**MOLDING**, SI F/D LWR-LH (W/B85)	15565467
	17.507	**MOLDING**, SI F/D LWR-RH (W/B85)	15565468
	17.507	**MOLDING**, SI R/D LWR-LH (W/B85)	15571415
	17.507	**MOLDING**, SI R/D LWR-RH (W/B85)	15571416
4.	17.507	**MOLDING**, BODY SI LWR FRT-LH (W/B85)	15628789
	17.507	**MOLDING**, BODY SI LWR FRT-RH (W/B85)	15628790
5.	17.507	**MOLDING**, RR WHL OPENING-LH (W/B96)	15616290
	17.507	**MOLDING**, RR WHL OPENING-RH(W/B96)	15616291
6.	17.507	**MOLDING**, BODY SI LWR RR-LH (W/B85)	15628791
	17.507	**MOLDING**, BODY SI LWR RR-RH (W/B85)	15628792
7.	17.507	**MOLDING KIT**, BODY SI LWR RR EXT-LH (W/B85)	15618492
	17.507	**MOLDING KIT**, BODY SI LWR RR EXT-RH (W/B85)	15618493
8.	16.445	**GUARD**, DR EDGE (W/B93)	15641889
9.	17.215	**MOLDING**, E/GATE LWR (W/B85)	15568977

© 1990 GENERAL MOTORS SERVICE PARTS OPERATIONS—LIGHT TRUCK 52R

TZR17-02
062890

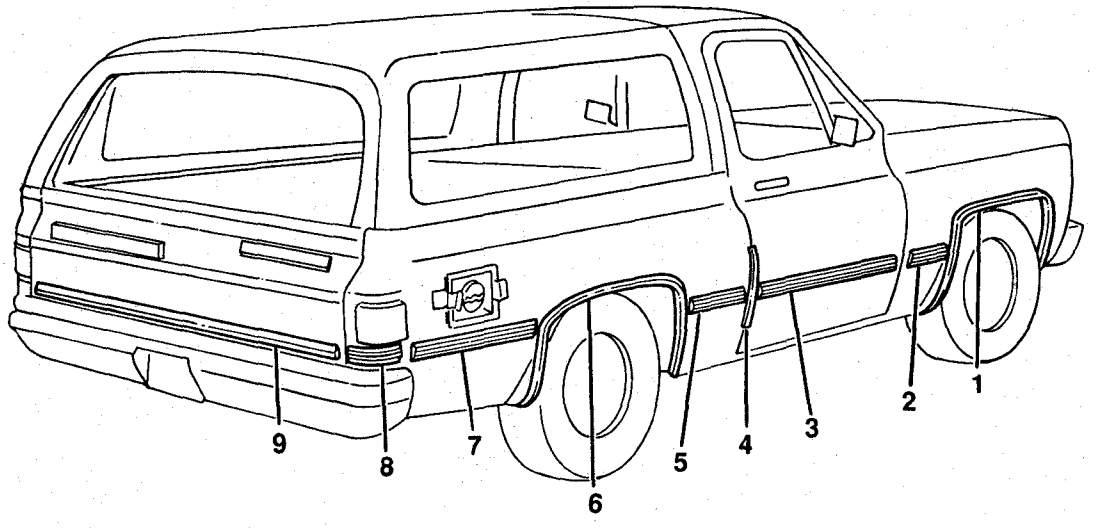

TZR17-02

1989-1991 V MOLDINGS (W/B85,B93,B96)

1.	8.132	**MOLDING KIT**, FRT FDR WHL HSG-LH (W/B96)	15616313
	8.132	**MOLDING KIT**, FRT FDR WHL HSG-RH (W/B96)	15616312
2.	8.132	**MOLDING**, FRT FDR LWR RR-LH (W/B85)	15628787
	8.132	**MOLDING**, FRT FDR LWR RR-RH (W/B85)	15628788
3.	17.507	**MOLDING**, SI F/D LWR-LH (W/B85)	15565467
	17.507	**MOLDING**, SI F/D LWR-RH (W/B85)	15565468
4.	16.445	**GUARD**, DR EDGE (W/B93)	15641889
5.	17.507	**MOLDING**, BODY SI LWR FRT-LH (W/B85)	15628789
	17.507	**MOLDING**, BODY SI LWR FRT-RH (W/B85)	15628790
6.	17.507	**MOLDING**, RR WHEEL OPENING-LH (W/B96)	15616290
	17.507	**MOLDING**, RR WHEEL OPENING-RH (W/B96)	15616291
7.	17.507	**MOLDING**, BODY SI LWR RR-LH (W/B85)	15628793
	17.507	**MOLDING**, BODY SI LWR RR-RH (W/B85)	15628794
8.	17.507	**MOLDING KIT**, BODY SI LWR RR EXT-LH (W/B85)	15618494
	17.507	**MOLDING KIT**, BODY SI LWR RR EXT-RH (W/B85)	15618495
9.	17.215	**MOLDING**, E/GATE LWR (W/B85)	15568977

© 1990 GENERAL MOTORS SERVICE PARTS OPERATIONS—LIGHT TRUCK 52R

NOTES

BLANK PAGE

TR17-302
120689

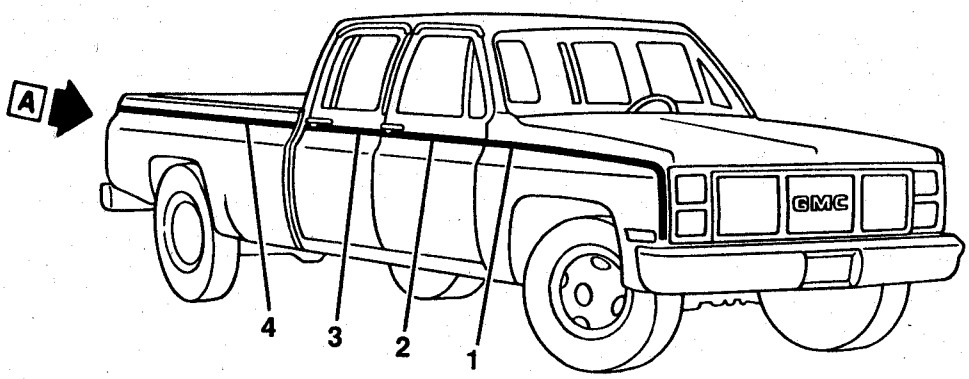

EXC RO5

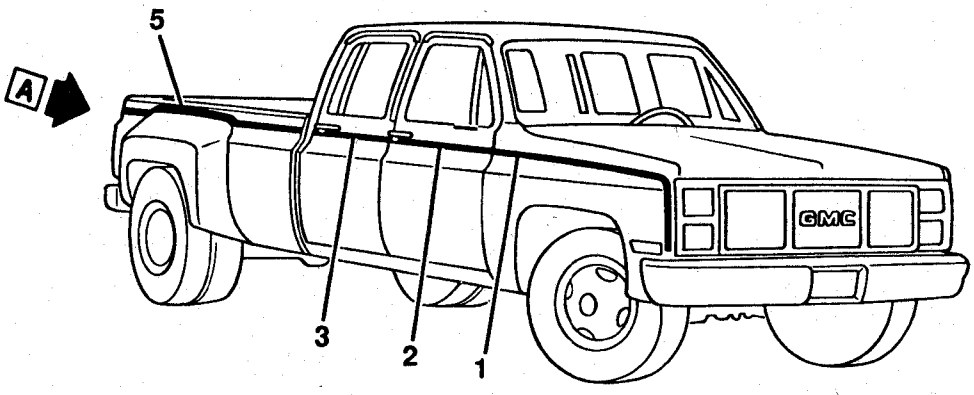

W/RO5

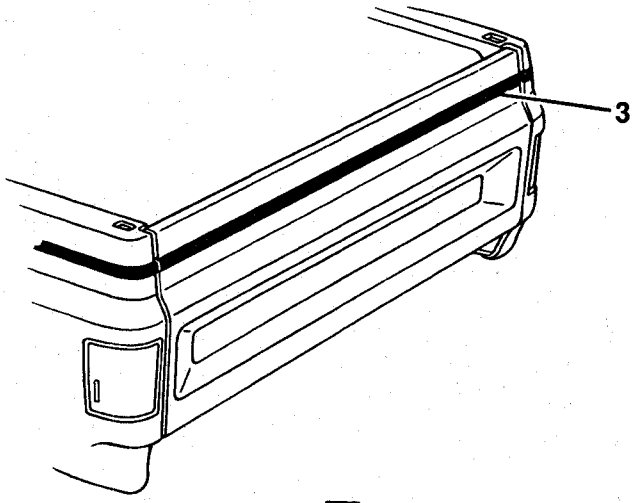

VIEW A

TR17-302

© 1990 GENERAL MOTORS SERVICE PARTS OPERATIONS—LIGHT TRUCK 52R

1989-1990 RV(43) DECALS & STRIPES STRIPES-BODY

1.	8.132	STRIPE, F/FDR-LH (DK BLUE/LT SLATE-23A)	14070569
	8.132	STRIPE, F/FDR-RH (DK BLUE/LT SLATE-23A)	14070570
	8.132	STRIPE, F/FDR-LH (LT BLUE/DK BLUE-27A)	14070575
	8.132	STRIPE, F/FDR-RH (LT BLUE/DK BLUE-27A)	14070576
	8.132	STRIPE, F/FDR-LH (DK BROWN/ALMOND-56A)	14070583
	8.132	STRIPE, F/FDR-RH (DK BROWN/ALMOND-56A)	14070584
	8.132	STRIPE, F/FDR-LH (ALMOND/DK BROWN-61A)	14070585
	8.132	STRIPE, F/FDR-RH (ALMOND/DK BROWN-61A)	14070586
	8.132	STRIPE, F/FDR-LH (VERMILLION/DK CARMINE-73A)	14070587
	8.132	STRIPE, F/FDR-RH (VERMILLION/DK CARMINE-(73A)	14070588
	8.132	STRIPE, F/FDR-LH (VERMILLION/LT SLATE-75A)	14070591
	8.132	STRIPE, F/FDR-RH (VERMILLION/LT SLATE-75A)	14070592
	8.132	STRIPE, F/FDR-LH (VERMILLION/BLACK-77A)	14070595
	8.132	STRIPE, F/FDR-RH (VERMILLION/BLACK-77A)	14070596
	8.132	STRIPE, F/FDR-LH (SILVER/BLACK-42A)	15565143
	8.132	STRIPE, F/FDR-RH (SILVER/BLACK-42A)	15565144
	8.132	STRIPE, F/FDR-LH (GOLD/BLACK-88A)	15565145
	8.132	STRIPE, F/FDR-RH (GOLD/BLACK-88A)	15565146
2.	17.507	STRIPE, FRT SI DR (DK BLUE MET-23A)	14070641
	17.507	STRIPE, FRT SI DR (LT TO DK BLUE-27A)	14070647
	17.507	STRIPE, FRT SI DR (DK BROWN TO ALMOND-56A)	14070655
	17.507	STRIPE, FRT SI DR (ALMOND TO DK BROWN-61A)	14070657
	17.507	STRIPE, FRT SI DR (VERMILLION TO DK CARMINE-73A)	14070659
	17.507	STRIPE, FRT SI DR (VERMILLION TO LT SLATE-75A)	14070663
	17.507	STRIPE, FRT SI DR (VERMILLION TO BLACK-77A)	14070667
	17.507	STRIPE, FRT SI DR (SILVER-42A)	15565132
	17.507	STRIPE, FRT SI DR (GOLD-88A)	15565133
3.	17.215	STRIPE, T/GATE & RR SI DR (DK BLUE MET-23A)(*1)	14072834
	17.215	STRIPE, T/GATE & RR SI DR (LT TO DK BLUE-27A)(*1)	14072837
	17.215	STRIPE, T/GATE & RR SI DR (DK BROWN TO ALMOND-56A)(*1)	14072841
	17.215	STRIPE, T/GATE & RR SI DR (ALMOND/DK BROWN-61A)(*1)	14072842
	17.215	STRIPE, T/GATE & RR SI DR (VERMILLION/DK CARMINE-73A)(*1)	14072843
	17.215	STRIPE, T/GATE & RR SI DR (VERMILLION/LT SLATE-75A)(*1)	14072845
	17.215	STRIPE, T/GATE & RR SI DR (VERMILLION/BLACK-77A)(*1)	14072847
	17.215	STRIPE, T/GATE & RR SI DR (SILVER/BLACK-42A)(*1)	15565158
	17.215	STRIPE, T/GATE & RR SI DR (GOLD/BLACK-88A)(*1)	15565159
4.	17.507	STRIPE, PUBX SI-LH (LT TO DK BLUE-27A)(*1)	14070697
	17.507	STRIPE, PUBX SI-RH (LT TO DK BLUE-27A)(*1)	14070698
	17.507	STRIPE, PUBX SI-LH (ALMOND TO DK BROWN-61A)(*1)	14072807
	17.507	STRIPE, PUBX SI-RH (ALMOND TO DK BROWN-61A)(*1)	14072808
	17.507	STRIPE, PUBX SI-LH (VERMILLION TO DK CARMINE-73A)(*1)	14072813
	17.507	STRIPE, PUBX SI-RH (VERMILLION TO DK CARMINE-73A)(*1)	14072814
	17.507	STRIPE, PUBX SI-LH (VERMILLION TO LT SLATE-75A)(*1)	14072819
	17.507	STRIPE, PUBX SI-RH (VERMILLION TO LT SLATE-75A)(*1)	14072820
	17.507	STRIPE, PUBX SI-LH (VERMILLION TO BLACK-77A)(*1)	14072829
	17.507	STRIPE, PUBX SI-RH (VERMILLION TO BLACK-77A)(*1)	14072830
	17.507	STRIPE, PUBX SI-LH (DK BROWN/ALMOND 56A)(*1)	15531677
	17.507	STRIPE, PUBX SI-RH (DK BROWN/ALMOND-56A)(*1)	15531678
	17.507	STRIPE, PUBX SI-LH (GOLD/BLACK-88A)(*1)	15565139
	17.507	STRIPE, PUBX SI-RH (GOLD/BLACK-88A)(*1)	15565140
	17.507	STRIPE, PUBX SI-LH (SILVER/BLACK-42A)(*1)	15571545
	17.507	STRIPE, PUBX SI-RH (SILVER/BLACK-42A)(*1)	15571546
	17.507	STRIPE, PUBX SI-LH (DK BLUE MET-23A)(*1)	14070687
	17.507	STRIPE, PUBX SI-RH (DK BLUE MET-23A)(*1)	14070688
5.	17.507	STRIPE, PUBX SI-LH (DK BROWN TO ALMOND-56A)	14072803
	17.507	STRIPE, PUBX SI-RH (DK BROWN TO ALMOND-56A)	14072804
	17.507	STRIPE, PUBX SI-LH (ALMOND TO DK BROWN-61A)	14072809
	17.507	STRIPE, PUBX SI-RH (ALMOND TO DK BROWN-61A)	14072810
	17.507	STRIPE, PUBX SI-LH (VERMILLION TO DK CARMINE-73A)	14072815
	17.507	STRIPE, PUBX SI-RH (VERMILLION TO DK CARMINE-73A)	14072816
	17.507	STRIPE, PUBX SI-LH (VERMILLION TO BLACK-77A)	14072831
	17.507	STRIPE, PUBX SI-RH (VERMILLION TO BLACK-77A)	14072832
	17.507	STRIPE, PUBX SI-LH (LT BLUE TO DK BLUE-27A)	14076731
	17.507	STRIPE, PUBX SI-RH (LT BLUE TO DK BLUE-27A)	14076732
	17.507	STRIPE, PUBX SI-LH (SILVER/BLACK-42A)	15565137
	17.507	STRIPE, PUBX SI-RH (SILVER/BLACK-42A)	15565138
	17.507	STRIPE, PUBX SI-LH (GOLD/BLACK-88A)	15565141
	17.507	STRIPE, PUBX SI-RH (GOLD/BLACK-88A)	15565142
	17.507	STRIPE, PUBX SI-LH (BLUE-23A)	15596983
	17.507	STRIPE, PUBX SI-RH (BLUE-23A)	15596984

NOTE 1: CUT AS REQUIRED.

© 1990 GENERAL MOTORS SERVICE PARTS OPERATIONS—LIGHT TRUCK 52R

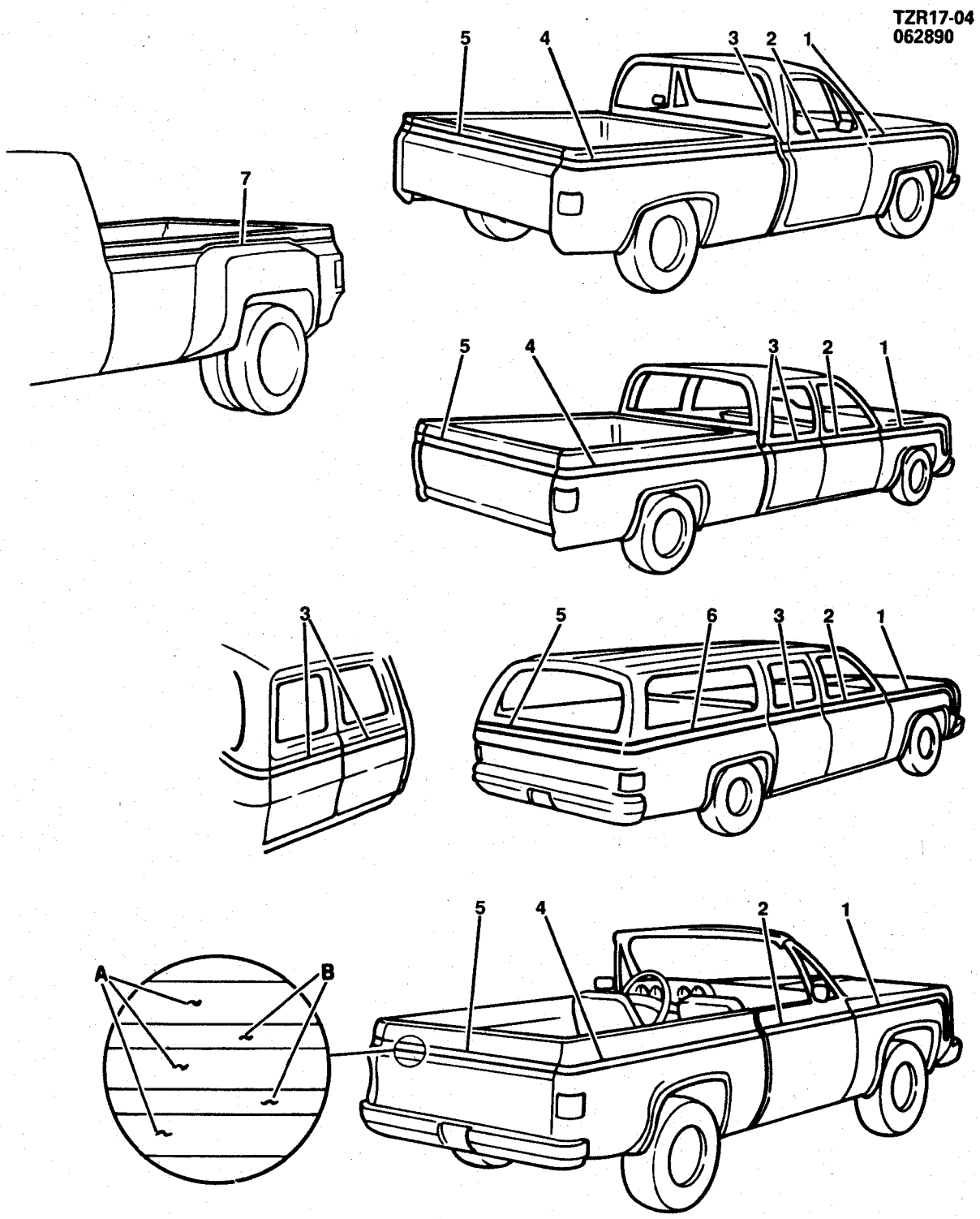

© 1990 GENERAL MOTORS SERVICE PARTS OPERATIONS—LIGHT TRUCK 52R

1985-1986 CK STRIPES (W/DECOR PKG ZY5/ZY9)
1987-1991 RV STRIPES (W/DECOR PKG ZY5/ZY9)

1.	8.132	STRIPE, F/FDR-LH (A-DK BLUE B-LT SLATE)(23A)	14070569
	8.132	STRIPE, F/FDR-RH (A-DK BLUE B-LT SLATE)(23A)	14070570
	8.132	STRIPE, F/FDR-LH (A-LT BLUE B-DK BLUE)(27A)	14070575
	8.132	STRIPE, F/FDR-RH (A-LT BLUE B-DK BLUE)(27A)	14070576
	8.132	STRIPE, F/FDR-LH (A-DK BLUE B-LT BLUE MET)(30A)(1985- 87)	14070577
	8.132	STRIPE, F/FDR-RH (A-DK BLUE B-LT BLUE MET)(30A)(1985- 87)	14070578
	8.132	STRIPE, F/FDR-LH (A-DK BLUE B-WHITE)(32A)(1985-87)	14070581
	8.132	STRIPE, F/FDR-RH (A-DK BLUE B-WHITE)(32A)(1985-87)	14070582
	8.132	STRIPE, F/FDR-LH (A-DK BROWN B-ALMOND)(56A)	14070583
	8.132	STRIPE, F/FDR-RH (A-DK BROWN B-ALMOND)(56A)	14070584
	8.132	STRIPE, F/FDR-LH (A-ALMOND B-DK BROWN)(61A)	14070585
	8.132	STRIPE, F/FDR-RH (A-ALMOND B-DK BROWN)(61A)	14070586
	8.132	STRIPE, F/FDR-LH (A-VERMILLION B-DK CARMINE)(73A)	14070587
	8.132	STRIPE, F/FDR-RH (A-VERMILLION B-DK CARMINE)(73A)	14070588
	8.132	STRIPE, F/FDR-LH (A-VERMILLION B-LT SLATE)(75A)(1985-89)	14070591
	8.132	STRIPE, F/FDR-RH (A-VERMILLION B-LT SLATE)(75A)(1985-89)	14070592
	8.132	STRIPE, F/FDR-LH (A-VERMILLION B-BLACK)(77A)	14070595
	8.132	STRIPE, F/FDR-RH (A-VERMILLION B-BLACK)(77A)	14070596
	8.132	STRIPE, F/FDR-LH (GOLD/BLACK)(88A)	15565145
	8.132	STRIPE, F/FDR-RH (GOLD/BLACK)(88A)	15565146
2.	17.507	STRIPE, F/D (A-DK BLUE B-LT SLATE)(23A)	14070641
	17.507	STRIPE, F/D (A-LT BLUE B-DK BLUE)(27A)	14070647
	17.507	STRIPE, F/D (A-DK BLUE B-LT BLUE MET)(30A)(1985-87)	14070649
	17.507	STRIPE, F/D (A-DK BLUE B-WHITE)(32A)(1985-87)	14070653
	17.507	STRIPE, F/D (A-DK BROWN B-ALMOND)(56A)	14070655
	17.507	STRIPE, F/D (A-ALMOND B-DK BROWN)(61A)	14070657
	17.507	STRIPE, F/D (A-VERMILLION B-DK CARMINE)(73A)	14070659
	17.507	STRIPE, F/D (A-VERMILLION B-LT SLATE)(75A)(1985-88)	14070663
	17.507	STRIPE, F/D (A-VERMILLION B-BLACK)(77A)	14070667
	17.507	STRIPE, F/D (GOLD/BLACK)(88A)	15565133
3.	17.507	STRIPE, (A-DK BLUE B-LT SLATE)(23A)(17.215)	14072834
	17.507	STRIPE, (A-LT BLUE B-DK BLUE)(27A)(17.215)	14072837
	17.507	STRIPE, (A-DK BLUE B-LT BLUE MET)(30A)(17.215)(1985-87)	14072838
	17.507	STRIPE, (A-DK BLUE B-WHITE)(32A)(17.215)(1985-87)	14072840
	17.215	STRIPE, (A-DK BROWN B-ALMOND)(56A)	14072841
	17.507	STRIPE, (A-ALMOND B-DK BROWN)(61A)(17.215)	14072842
	17.507	STRIPE, (A-VERMILLION B-DK CARMINE)(73A)(17.215)	14072843
	17.507	STRIPE, (A-VERMILLION B-LT SLATE)(75A)(17.215)(1985-90)	14072845
	17.507	STRIPE, (A-VERMILLION B-BLACK)(77A)(17.215)	14072847
	17.507	STRIPE, (GOLD/BLACK)(88A)(17.215)	15565159
4.	17.507	STRIPE, BODY-LH (A-DK BLUE B-LT SLATE)(23A)(*2)	14070687
	17.507	STRIPE, BODY-RH (A-DK BLUE B-LT SLATE)(23A)(*2)	14070688
	17.507	STRIPE, BODY-LH (A-LT BLUE B-DK BLUE)(27A)(*2)	14070697
	17.507	STRIPE, BODY-RH (A-LT BLUE B-DK BLUE)(27A)(*2)	14070698
	17.507	STRIPE, BODY-LH (A-DK BLUE B-LT BLUE MET)(30A)(1985- 87)(*3)	14070609
	17.507	STRIPE, BODY-RH (A-DK BLUE B-LT BLUE MET)(30A)(1985- 87)(*3)	14070610
	17.507	STRIPE, BODY-LH/RH (A-DK BLUE B-WHITE)(32A)(1985-87)(*2)	14072840
	17.507	STRIPE, BODY-LH (A-DK BROWN B-ALMOND)(56A)(*2)	15531677
	17.507	STRIPE, BODY-RH (A-DK BROWN B-ALMOND)(56A)(*2)	15531678
	17.507	STRIPE, BODY-LH (A-ALMOND B-DK BROWN)(61A)(*2)	14072807
	17.507	STRIPE, BODY-RH (A-ALMOND B-DK BROWN)(61A)(*2)	14072808
	17.507	STRIPE, BODY-LH (A-VERMILLION B-DK CARMINE)(73A)(*2)	14072813
	17.507	STRIPE, BODY-RH (A-VERMILLION B-DK CARMINE)(73A)(*2)	14072814
	17.507	STRIPE, BODY-LH (A-VERMILLION B-LT SLATE)(75A)(1985-89)(*2)	14072819
	17.507	STRIPE, BODY-RH (A-VERMILLION B-LT SLATE)(75A)(1985-89)(*2)	14072820
	17.507	STRIPE, BODY-LH (A-VERMILLION B-BLACK)(77A)(*2)	14072829
	17.507	STRIPE, BODY-RH (A-VERMILLION B-BLACK)(77A)(*2)	14072830
	17.507	STRIPE, BODY-LH (GOLD/BLACK)(88A)	15565139
	17.507	STRIPE, BODY-RH (GOLD/BLACK)(88A)	15565140
5.	17.215	STRIPE, T/GATE (A-DK BLUE B-LT SLATE)(23A)	14072834
	17.215	STRIPE, T/GATE (A-LT BLUE B-DK BLUE)(27A)	14072837
	17.215	STRIPE, T/GATE (A-DK BLUE B-LT BLUE MET)(30A)(1985-87)	14072838
	17.215	STRIPE, T/GATE (A-DK BLUE B-WHITE)(32A)(1985-87)	14072840
	17.215	STRIPE, T/GATE (A-DK BROWN B-ALMOND)(56A)	14072841
	17.215	STRIPE, T/GATE (A-ALMOND B-DK BROWN)(61A)	14072842
	17.215	STRIPE, T/GATE (A-VERMILLION B-DK CARMINE)(73A)	14072843
	17.215	STRIPE, T/GATE (A-VERMILLION B-LT SLATE)(75A)(1985-90)	14072845
	17.215	STRIPE, T/GATE (A-VERMILLION B-BLACK)(77A)	14072847
	17.215	STRIPE, T/GATE (GOLD/BLACK)(88A)	15565159
6.	17.507	STRIPE, BODY-LH (A-DK BLUE B-LT SLATE)(23A)(1985-87)	15596985
	17.507	STRIPE, BODY-RH (A-DK BLUE B-LT SLATE)(23A)(1985-87)	15596986
	17.507	STRIPE, BODY-LH (A-LT BLUE B-DK BLUE)(27A)(1985-88)	14070607

© 1990 GENERAL MOTORS SERVICE PARTS OPERATIONS—LIGHT TRUCK 52R

6.	17.507	STRIPE, BODY-RH (A-LT BLUE B-DK BLUE)(27A)(1985-88)	14070608
	17.507	STRIPE, BODY-LH (A-DK BLUE B-LT BLUE MET)(30A)(1985- 87)	14070611
	17.507	STRIPE, BODY-RH (A-DK BLUE B-LT BLUE MET)(30A)(1985- 87)	14070612
	17.507	STRIPE, BODY-LH (A-DK BLUE B-WHITE)(32A)(1985-87)	14070615
	17.507	STRIPE, BODY-RH (A-DK BLUE B-WHITE)(32A)(1985-87)	14070616
	17.507	STRIPE, BODY SI (A-DK BROWN B-ALMOND)(56A)(1986-88)	15531689
	17.507	STRIPE, BODY SI (A-DK BROWN B-ALMOND)(56A)(1986-88)	15531690
	17.507	STRIPE, BODY-LH (A-ALMOND B-DK BROWN)(61A)(1985-88)	14070621
	17.507	STRIPE, BODY-RH (A-ALMOND B-DK BROWN)(61A)(1985-88)	14070622
	17.507	STRIPE, BODY-LH (A-VERMILLION B-DK CARMINE)(73A)(1985-88)	14070625
	17.507	STRIPE, BDOY-RH (A-VERMILLION B-DK CARMINE)(73A)(1985-88)	14070626
	17.507	STRIPE, BODY-LH (A-VERMILLION B-LT SLATE)(75A)(1985- 88)	14070629
	17.507	STRIPE, BODY-RH (A-VERMILLION B-LT SLATE)(75A)(1985- 88)	14070630
	17.507	STRIPE, BODY-LH (A-VERMILLION B-BLACK)(77A)(1985-88)	14070633
	17.507	STRIPE, BODY-RH (A-VERMILLION B-BLACK)(77A)(1985-88)	14070634
7.	17.507	STRIPE, PUBX SI-LH (A-DK BLUE B-LT SLATE)(23A)	15596983
	17.507	STRIPE, PUBX SI-RH (A-DK BLUE B-LT SLATE)(23A)	15596984
	17.507	STRIPE, PUBX SI-LH (A-LT BLUE B-DK BLUE)(27A)	14076731
	17.507	STRIPE, PUBX SI-RH (A-LT BLUE B-DK BLUE)(27A)	14076732
	17.507	STRIPE, PUBX SI-LH (A-DK BLUE B-WHITE)(32A)(1985-87)	14072801
	17.507	STRIPE, PUBX SI-RH (A-DK BLUE B-WHITE)(32A)(1985-87)	14072802
	17.507	STRIPE, PUBX SI-LH (A-DK BROWN B-ALMOND)(56A)	14072803
	17.507	STRIPE, PUBX SI-RH (A-DK BROWN B-ALMOND)(56A)	14072804
	17.507	STRIPE, PUBX SI-LH (A-ALMOND B-DK BROWN)(61A)	14072809
	17.507	STRIPE, PUBX SI-RH (A-ALMOND B-DK BROWN)(61A)	14072810
	17.507	STRIPE, PUBX SI-LH (A-VERMILLION B-DK CARMINE)(73A)	14072815
	17.507	STRIPE, PUBX SI-RH (A-VERMILLION B-DK CARMINE)(73A)	14072816
	17.507	STRIPE, PUBX SI-LH (A-VERMILLION B-LT SLATE)(75A)(1985-89)	14072821
	17.507	STRIPE, PUBX SI-RH (A-VERMILLION B-LT SLATE)(75A)	14072822
	17.507	STRIPE, PUBX SI-LH (A-VERMILLION B-BLACK)(77A)	14072831
	17.507	STRIPE, PUBX SI-RH (A-VERMILLION B-BLACK)(77A)	14072832
	17.507	STRIPE, PUBX SI-LH (SILVER/BLACK)(88A)	15565141
	17.507	STRIPE, PUBX SI-RH (SILVER/BLACK)(88A)	15565142

NOTE 2: NUMBERS LISTED ARE 103.5" LONG & WILL REQUIRE CUTTING TO LENGTH WHEN USED ON 6 1/2' PICKUP BOX OR BLAZER MODELS.

NOTE 3: USED ON BLAZER MODEL ONLY. EXACT LENGTH, NO CUTTING REQUIRED

© 1990 GENERAL MOTORS SERVICE PARTS OPERATIONS—LIGHT TRUCK 52R

NOTES

BLANK PAGE

TR17-303
112989

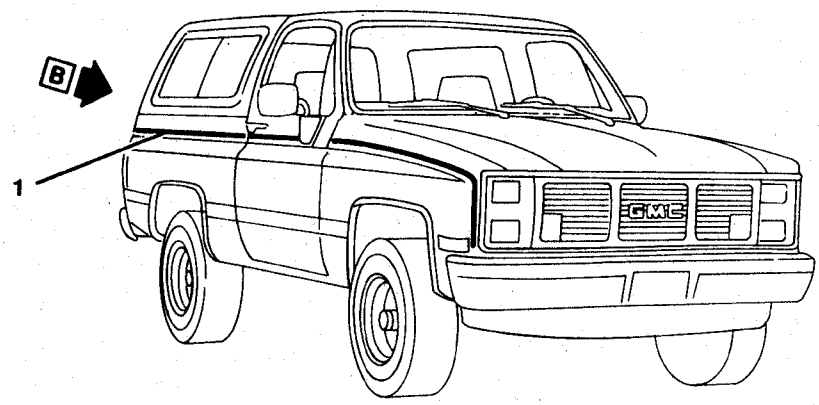

16

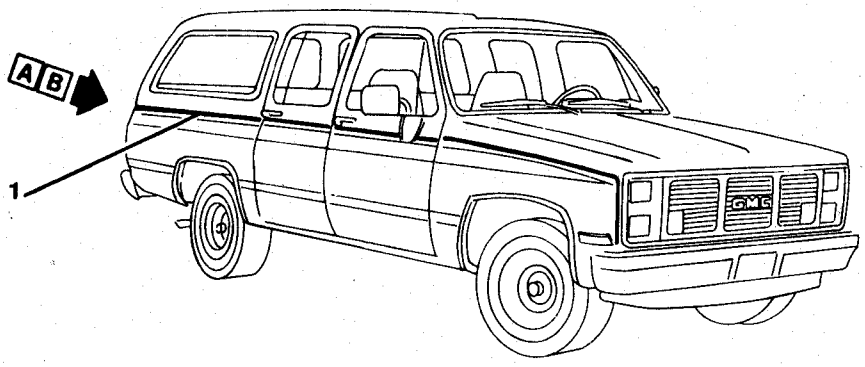

06

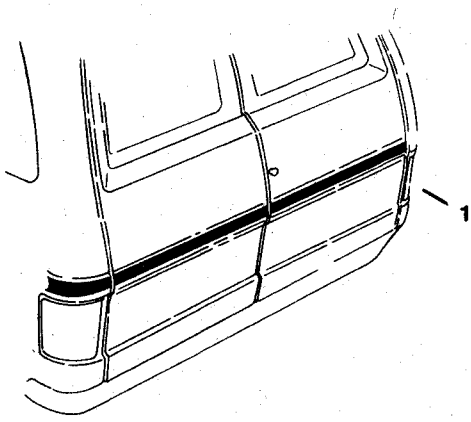

VIEW A

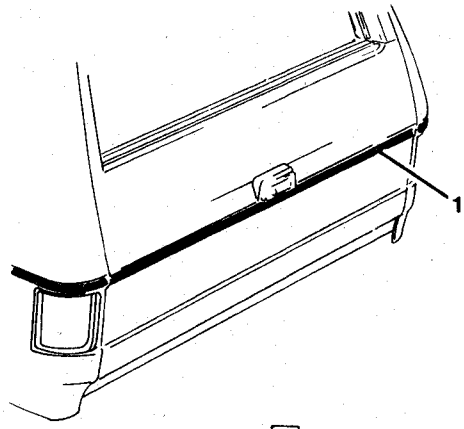

VIEW B

TR17-303

© 1990 GENERAL MOTORS SERVICE PARTS OPERATIONS—LIGHT TRUCK 52R

1989-1990 RV(06-16) STRIPES STRIPES-BODY

1.	8.132	**STRIPE** (SILVER/BLACK-42A)(3-BAND)	15617877
	8.132	**STRIPE** (LT BLUE/DK BLUE-27A)(3-BAND)	15617878
	8.132	**STRIPE** (GOLD/BLACK-88A)(3-BAND)	15617879
	8.132	**STRIPE** (DK BLUE/SLATE-23A)(3-BAND)	15617880
	8.132	**STRIPE** (DK BROWN/ALMOND-56A)(3-BAND)	15617881
	8.132	**STRIPE** (ALMOND/DK BROWN-61A)(3-BAND)	15617882
	8.132	**STRIPE** (VERMILLION/DK CARMINE-73A)(3-BAND)	15617883
	8.132	**STRIPE** (VERMILLION/SLATE-75A)(3-BAND)	15617884
	8.132	**STRIPE** (VERMILLION/BLACK-77A)(3-BAND)	15617885

© 1990 GENERAL MOTORS SERVICE PARTS OPERATIONS—LIGHT TRUCK 52R

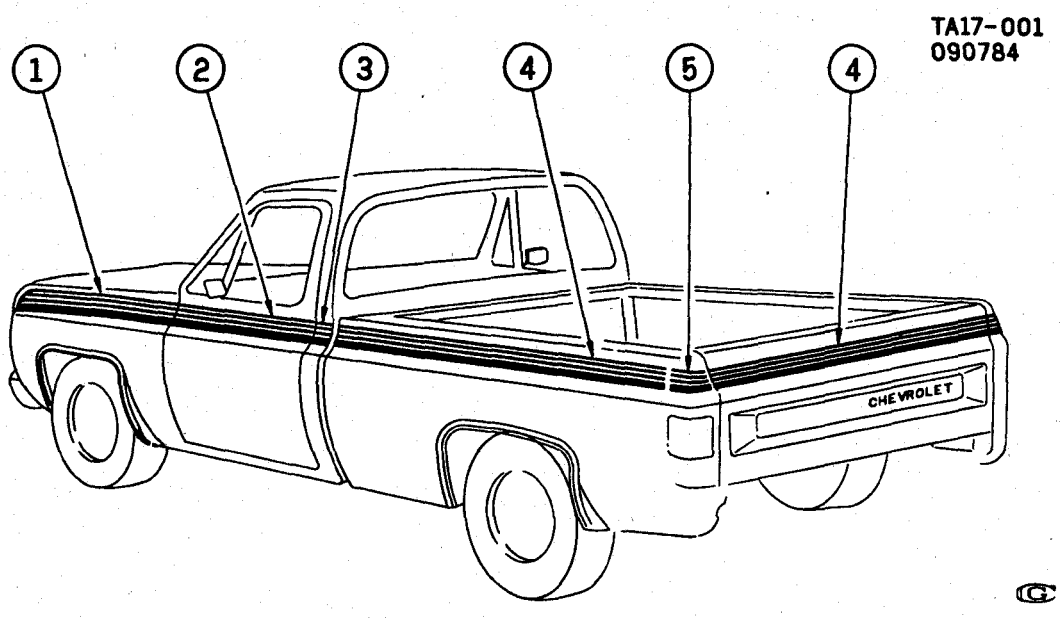

1985-1986 CK(03) STRIPES/BODY SIDE & ENDGATE (W/VALUE DECOR PKG YJ6/D92)
1987 RV(03) STRIPES/BODY SIDE & ENDGATE (W/VALUE DECOR PKG YJ6/D92)

1.	8.132	STRIPE, F/FDR SI-LH (BLACK-19A)	15594921
	8.132	STRIPE, F/FDR SI-RH (BLACK-19A)	15594922
	8.132	STRIPE, F/FDR SI-LH (WHITE-12A)	15594931
	8.132	STRIPE, F/FDR SI-RH (WHITE-12A)	15594932
	8.132	STRIPE, F/FDR SI-LH (BLUE-29A)	15594941
	8.132	STRIPE, F/FDR SI-RH (BLUE-29A)	15594942
	8.132	STRIPE, F/FDR SI-LH (RED-72A)	15594951
	8.132	STRIPE, F/FDR SI-RH (RED-72A)	15594952
2.	17.507	STRIPE, DOOR-LH (BLACK-19A)	15594923
	17.507	STRIPE, DOOR-RH (BLACK-19A)	15594924
	17.507	STRIPE, DOOR-LH (WHITE-12A)	15594933
	17.507	STRIPE, DOOR-RH (WHITE-12A)	15594934
	17.507	STRIPE, DOOR-LH (BLUE-29A)	15594943
	17.507	STRIPE, DOOR-RH (BLUE-29A)	15594944
	17.507	STRIPE, DOOR-LH (RED-72A)	15594953
	17.507	STRIPE, DOOR-RH (RED-72A)	15594954
3.	17.507	STRIPE, BODY SI-LH (BLACK-19A)	15594925
	17.507	STRIPE, BODY SI-RH (BLACK-19A)	15594926
	17.507	STRIPE, BODY SI-LH (WHITE-12A)	15594935
	17.507	STRIPE, BODY SI-RH (WHITE-12A)	15594936
	17.507	STRIPE, BODY SI-LH (BLUE-29A)	15594945
	17.507	STRIPE, BODY SI-RH (BLUE-29A)	15594946
	17.507	STRIPE, BODY SI-LH (RED-72A)	15594955
	17.507	STRIPE, BODY SI-RH (RED-72A)	15594956
4.	17.507	STRIPE, PUBX SI & T/GATE (BLACK-19A)(*1)	15593811
	17.507	STRIPE, PUBX SI & T/GATE (WHITE-12A)(*1)	15593812
	17.507	STRIPE, PUBX SI & T/GATE (BLUE-29A)(*1)	15593813
	17.507	STRIPE, PUBX SI & T/GATE (RED-72A)(*1)	15593814
5.	17.507	STRIPE, PUBX END-LH (BLACK-19A)	15593819
	17.507	STRIPE, PUBX END-RH (BLACK-19A)	15593820
	17.507	STRIPE, PUBX END-LH (WHITE-12A)	15593821
	17.507	STRIPE, PUBX END-RH (WHITE-12A)	15593822
	17.507	STRIPE, PUBX END-LH (BLUE-29A)	15593823
	17.507	STRIPE, PUBX END-RH (BLUE-29A)	15593824
	17.507	STRIPE, PUBX END-LH (RED-72A)	15593825
	17.507	STRIPE, PUBX END-RH (RED-72A)	15593826

NOTE 1: PART NUMBERS LISTED ARE APPROXIMATELY 98 3/8" LONG & MUST BE CUT AS REQUIRED WHEN USED FOR TAILGATE APPLICATION OR ON 6 1/2' BOX.

© 1990 GENERAL MOTORS SERVICE PARTS OPERATIONS—LIGHT TRUCK 52R

GROUP 18.000
CRASH PARTS

ILLUSTRATION INDEX

TITLE	PAGE
1985-1986 CK BUMPER/FRONT	18-1
1987-1991 RV BUMPER/FRONT	18-1
1985-1986 CK GRILLE/RADIATOR	18-5
1987-1991 RV GRILLE/RADIATOR	18-5
1985-1986 CK HEADLAMPS/SINGLE (SINGLE LAMP SYSTEM)	18-9
1987-1991 RV HEADLAMPS/SINGLE (SINGLE LAMP SYSTEM)	18-9
1989-1991 RV HEADLAMPS/DUAL FRONT (W/V22)	18-11
1987-1991 RV SHEET METAL/FRONT END	18-15
1985-1986 CK(43) SHEET METAL/BODY	18-21
1987-1991 RV(43) SHEET METAL/BODY	18-21
1985-1986 CK(06) SHEET METAL/BODY	18-25
1987-1991 RV(06) SHEET METAL/BODY	18-25
1985-1986 CK(03) SHEET METAL/BODY SIDE & ROOF	18-31
1987-1989 RV(03) SHEET METAL/BODY SIDE & ROOF	18-31
1985-1986 K(16) SHEET METAL/BODY SIDE & ROOF	18-33
1987-1991 V(16) SHEET METAL/BODY SIDE & ROOF	18-33
1985-1986 K(16) TOP/REMOVABLE	18-37
1987-1991 V(16) TOP/REMOVABLE	18-37
1985-1986 CK(03-43) WINDOWS (REAR)	18-39
1987-1991 RV(03-43) WINDOWS (REAR)	18-39
1988-1991 RV(06) WINDOWS	18-41
1985-1986 CK MIRROR/EXTERIOR (SENIOR WEST COAST DG5)	18-43
1987-1991 RV MIRROR/EXTERIOR (SENIOR WEST COAST DG5)	18-43
1985-1986 CK MIRROR/EXTERIOR (W/D44,D45)	18-45
1987-1991 RV MIRROR/EXTERIOR (W/D44,D45)	18-45
1985-1986 CK MIRROR/EXTERIOR (W/DF2 CAMPER)	18-47
1987-1991 RV MIRROR/EXTERIOR (W/DF2 CAMPER)	18-47
1987-1991 RV MIRROR/EXTERIOR (W/DF2 CAMPER)	18-47
1985-1986 CK MIRROR/EXTERIOR (STANDARD)	18-48
1987 RV MIRROR/EXTERIOR (STANDARD)	18-48
1987-1991 RV DOOR HARDWARE/SIDE FRONT	18-51
1985-1986 CK(06-43) DOOR HARDWARE/SIDE REAR	18-55
1987-1991 RV(06-43) DOOR HARDWARE/SIDE REAR	18-55
1985-1986 CK(06) DOOR HARDWARE/REAR	18-59
1987-1991 RV(06) DOOR HARDWARE/REAR	18-59
1987-1991 RV(06) DOOR HARDWARE/REAR	18-59
1985-1986 CK PICKUP BOX/FLEETSIDE	18-63
1987-1991 RV PICKUP BOX/FLEETSIDE	18-63
1985-1986 CK(03) PICKUP BOX/STEPSIDE	18-67
1987 RV(03) PICKUP BOX/STEPSIDE	18-67
1985-1986 CK(06) ENDGATE	18-69
1987-1991 RV(06) ENDGATE	18-69
1985-1986 K(16) ENDGATE	18-73
1987-1991 V(16) ENDGATE	18-73
1985-1986 CK(03-43) LAMPS/REAR (W/FLEETSIDE/WIDESIDE PICKUP-BOX E63)	18-77
1985-1986 CK(06-16) LAMPS/REAR	18-79
1987-1991 RV(06-16) LAMPS/REAR	18-79
1985-1986 CK(03-43) BUMPER/REAR STEP	18-81
1987-1991 RV(03-43) BUMPER/REAR STEP	18-81
1985-1986 CK(06-16) BUMPER/REAR	18-82
1987-1991 RV(06-16) BUMPER/REAR	18-82
1985-1986 CK(06) MOLDINGS	18-84
1985-1986 CK(03-43) MOLDINGS	18-87

© 1990 GENERAL MOTORS SERVICE PARTS OPERATIONS—LIGHT TRUCK 52R

ILLUSTRATION INDEX

	TITLE	PAGE
1987-1991	RV(03-43) MOLDINGS	18-87
1985-1986	K(16) MOLDINGS	18-91
1987-1988	V(16) MOLDINGS	18-91
1989-1991	RV MOLDINGS (NAME PLATES/SIDE)	18-93
1989-1991	RV(06) MOLDINGS (W/B85,B93,B96)	18-94
1989-1991	V MOLDINGS (W/B85,B93,B96)	18-96
1989-1990	RV(43) DECALS & STRIPES	18-99
1989-1990	RV(06-16) DECALS & STRIPES	18-103
1985-1986	CK STRIPES (W/DECOR PKG ZY5/ZY9)	18-105
1985-1986	CK(03) STRIPES/BODY SIDE & ENDGATE (W/VALUE DECOR PKG YJ6/D92)	18-108
1987	RV(03) STRIPES/BODY SIDE & ENDGATE (W/VALUE DECOR PKG YJ6/D92)	18-108

© 1990 GENERAL MOTORS SERVICE PARTS OPERATIONS—LIGHT TRUCK 52R

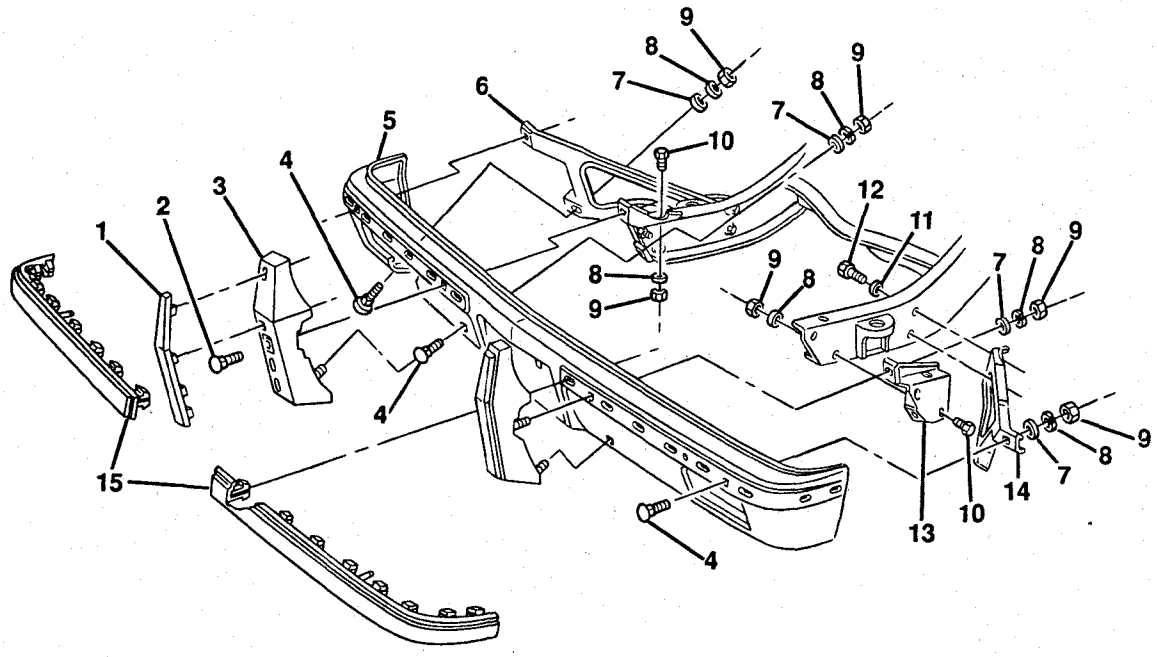

TZR07-03@

1985-1986 CK BUMPER/FRONT
1987-1991 RV BUMPER/FRONT

ILL NO.	GROUP	DESCRIPTION	USAGE	QTY	PART NUMBER	PER VEH	PRICE EACH	PRICE EXT
1.	7.828	**STRIP**, BUMPER GUARD			467300			
2.	7.829	**BUSHING KIT**, FRT BPR GUARD(V31)			358059			
3.	7.828	**GUARD**, FRONT BUMPER-LH (W/GUARDS V31)			14022881			
	7.828	**GUARD**, FRONT BUMPER-RH (W/GUARDS V31)			14022882			
	7.828	**GUARD**, FRT BPR-LH (RV1,2 06-16)(W/GUARDS VG3)(1990-91)			15614471			
	7.828	**GUARD**, FRT BPR-RH (RV1,2,06-16)(W/GUARDS VG3)(1990-91)			15614472			
4.	8.903	**BOLT**, RND HD SQ NK W/SST CAP (1/2-13X2)(*1)			340734			
	8.903	**BOLT**, RND HD SQ NK (1/2-13X1 1/2)(*2)			9437273			
5.	7.831	**BAR**, BUMPER (CHROME)(EXC IMP STRIP)			14043720			
	7.831	**BAR**, BUMPER (CHROME)(W/IMP STRIP)(1985-89)			14043721			
	7.831	**BAR**, FRT BPR IMP (W/8E8 PAINTED BUMPER,5U7 CARRIER & SPARE WHEEL)			14063124			
6.	7.836	**BRACE**, BAR OUTER-RH			15606578			
7.	8.929	**WASHER**, FLAT (.531X1.25X.119)			3983589			
8.	8.931	**WASHER**, LOCK (1/2X1X1/16, ZINC)			2436165			
9.	8.915	**NUT**, HEX (1/2-13)			9414511			

© 1990 GENERAL MOTORS SERVICE PARTS OPERATIONS—LIGHT TRUCK 52R

CONTINUED

10.	8.900	BOLT, HEX (1/2-13X1 1/4)		9425082	___	___	___
11.	8.929	WASHER, SPL STL (15/32 IDX1 1/8 ODX1/8)		3790768	___	___	___
12.	8.900	BOLT, HEX (7/16-14X1 1/4)		9424069	___	___	___
13.	7.836	BRACKET, BAR OUTER-LH		14064637	___	___	___
	7.836	BRACKET, BAR OUTER-RH		14064638	___	___	___
14.	7.836	BRACE, BAR OUTER-LH (1985-87)		14045515	___	___	___
	7.836	BRACE, FRT BPR IMP BAR OTR-LH (1988-91)		15606577	___	___	___
15.	7.831	STRIP, OUTER RUB IMP-LH (W/VG3 FRONT BUMPER IMPACT STRIP)(1985-88)		14026497	___	___	___
	7.831	STRIP, OUTER RUB IMP-LH (W/VG3 FRONT BUMPER IMPACT STRIP)(1989-90)		15571635	___	___	___
	7.831	STRIP, OUTER RUB IMP-RH (W/VG3 FRONT BUMPER IMPACT STRIP(1985-88)		14026498	___	___	___
	7.831	STRIP, OUTER RUB IMP-RH (W/VG3 FRONT BUMPER IMPACT STRIP)(1989-90)		15571636	___	___	___

NOTE 1: USED IN ALL LOCATIONS EXCEPT UNDER IMPACT STRIP ON BUMPERS SO EQUIPPED.
NOTE 2: USED UNDER IMPACT STRIP ONLY, ON BUMPERS SO EQUIPPED.

RPO DEFINITIONS
VG3 - STRIP, FRT BUMPER IMPACT
V31 - GUARDS, BUMPER, FRT, CHROME
8E8 - BUMPER, PAINTED FRONT
V31 - GUARDS,FRONT BUMPER(CHROME)

© 1990 GENERAL MOTORS SERVICE PARTS OPERATIONS—LIGHT TRUCK 52R

NOTES

BLANK PAGE

© 1990 GENERAL MOTORS SERVICE PARTS OPERATIONS—LIGHT TRUCK 52R

TZR01-01
070590

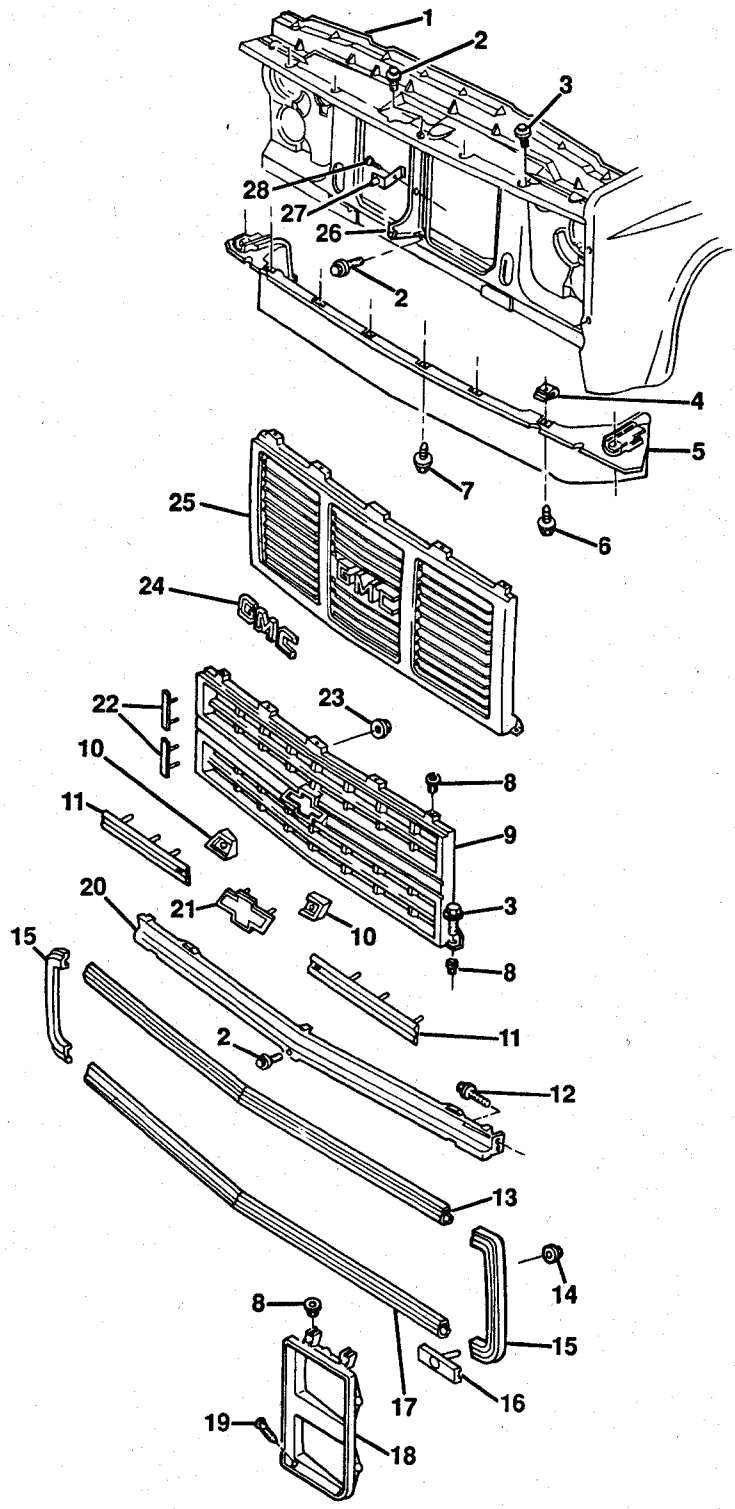

TZR01-01@

© 1990 GENERAL MOTORS SERVICE PARTS OPERATIONS—LIGHT TRUCK 52R

1985-1986 CK GRILLE/RADIATOR
1987-1991 RV GRILLE/RADIATOR

ILL NO.	GROUP	DESCRIPTION	USAGE	QTY	PART NUMBER	PER VEH	PRICE EACH	PRICE EXT
1.	1.270	**SUPPORT**, RAD (COMPL)(EXC V22) (1985-88)			15606587			
	1.270	**SUPPORT**, RAD (COMPL)(W/V22) (1985-88)			15606586			
	1.270	**SUPPORT**, RAD((EXC V22)(1989-91))(EXC V22)			15628622			
	1.270	**SUPPORT**, RAD((03-43)(W/V22) (1989-91))(V22)			15628620			
	1.270	**SUPPORT**, RAD((06-16)(W/V22) (1989-91))			15641713			
2.	8.900	**SCREW**, HEX W/CON WA (5/16-18X7/8)			473892			
3.	8.977	**SCREW**, HEX W/FL WA TAP (M4.2X1.41X16)						
4.	8.921	**NUT**, U-SHAPE (5/16-18)						
5.	1.272	**DEFLECTOR**, FRT AIR (R1,C1 EXC TOW HOOK V76)			15569084			
	1.272	**DEFLECTOR**, FRT AIR (V1,K1 EXC TOW HOOK V76)			15569086			
	1.272	**DEFLECTOR**, FRT AIR (W/TOW HOOK V76)			15569088			
6.	8.977	**SCREW**, HEX W/FL WA (M8X2.12X30, POR)						
7.	8.900	**BOLT**, FLG HEX (5/16-18X1 3/8)						
8.	2.729	**NUT**, SPL ANC (NYLON)(SQUARE HOLE)			347347			
9.	1.266	**GRILLE**, RAD (CHEV)(EXC CHR GRL V22)(1985-88)			15554910			
	1.266	**GRILLE**, RAD (CHEV)(EXC CHR GRL V22)(1989-91)			15628797			
	1.266	**GRILLE**, RAD (CHEV)(W/CHR GRL V22)(INC #22)(1985-88)			15554911			
	1.266	**GRILLE**, RAD (CHEV)(W/CHR GRL V22)(1989-91)			15628796			
10.	1.303	**SPACER**, RAD GRL EMB-LH (W/CHR GRL V22)(1985-88)			15598755			
	1.303	**SPACER**, RAD GRL EMB-RH (W/CHR GRL V22)(1985-88)			15598756			
11.	1.268	**MOLDING**, RAD GRL-LH (W/CHR GRL V22)(PAINT AS REQ)(1985-88)			15616657			
	1.268	**MOLDING**, RAD GRL-RH (W/CHR GRL V22)(PAINT AS REQ)(1985-88)			15616658			
12.	8.900	**BOLT**, HEX LG FL WA (5/16-18X7/8, POR)						
13.	1.263	**MOLDING**, F/END SHT MTL CR PNL (UPPER)(1985-88)			15594898			
14.	8.921	**NUT**, MET SKW FLG (M5X15, PHOS)						
15.	2.728	**MOLDING**, HDLP OPG-LH (1985-88)			15593227			
	2.728	**MOLDING**, HDLP OPG-RH (1985-88)			15593228			
16.	1.263	**CLIP**, F/END PNL MLDG (1985-88)			14072850			
17.	1.263	**MOLDING**, F/END PNL (LOWER) (1985-88)			15594897			
18.	2.728	**BEZEL**, HDLP-LH (EXC V22)(PAINT AS REQ)(1985-88)			15598725			
	2.728	**BEZEL**, HDLP-LH (EXC V22)(PAINT AS REQ)(1989-91)			15628671			
	2.728	**BEZEL**, HDLP-RH (EXC V22)(PAINT AS REQ)(1985-88)			15598726			
	2.728	**BEZEL**, HDLP-RH (EXC V22)(PAINT AS REQ)(1989-91)			15628672			
	2.728	**BEZEL**, HDLP-LH (W/CHR GRL V22) (1985-88)			15598727			

© 1990 GENERAL MOTORS SERVICE PARTS OPERATIONS—LIGHT TRUCK 52R

18.	2.728	**BEZEL** ,HDLP-LH (GMC)(W/CHR GRL V22)(1989-91)		15628667	___	___	___
	2.728	**BEZEL** ,HDLP-LH (CHEV)(W/CHR GRL V22)(1989-91)		15628669	___	___	___
	2.728	**BEZEL** , HDLP-RH (W/CHR GRL V22)(1985-88)		15598728	___	___	___
	2.728	**BEZEL** ,HDLP-RH (GMC)(W/CHR GRL V22)(1989-91)		15628668	___	___	___
	2.728	**BEZEL** ,HDLP-RH (CHEV)(W/CHR GRL V22)(1989-91)		15628670	___	___	___
19.	8.977	**SCREW** , OV HD C/R TAP (M4.2X1.41X30)			___	___	___
20.	1.263	**PANEL** , F/END (1985-88)		14043880	___	___	___
	1.263	**PANEL** , F/END (1989-91)		15641829	___	___	___
21.	1.303	**EMBLEM** , RAD GRL (EXC CHR GRL OR SCOTTSDALE)		14043879	___	___	___
	1.303	**EMBLEM** , RAD GRL (W/CHR GRL OR SCOTTSDALE)		14043882	___	___	___
22.	1.268	**MOLDING** , RAD GRL SI UPR (W/CHR GRL V22)(CHEV)(1985-88)		15598752	___	___	___
	1.268	**MOLDING** , RAD GRL SI LWR (W/CHR GRL V22)(CHEV)(1985-88)		15598753	___	___	___
23.	N.S.	**NUT** , PUSH-ON			___	___	___
24.	1.303	**LETTER** , "G" RAD GRL (W/CHR GRL V22 OR Z62)(1985-88)		14043921	___	___	___
	1.303	**LETTER** , "M" RAD GRL (W/CHR GRL V22 OR Z62)(1985-88)		14043922	___	___	___
	1.303	**LETTER** , "C" RAD GRL (W/CHR GRL V22 OR Z62)(1985-88)		14043923	___	___	___
25.	1.266	**GRILLE** , RAD (GMC)(PAINT AS REQ)(1985-88)		15554913	___	___	___
	1.266	**GRILLE** , RAD (BASE GMC)(EXC CHR GRL V22)(1989-91)		15629622	___	___	___
	1.266	**GRILLE** , RAD (GMC-UP/LEVEL) (W/CHR GRL V22)(1989-91)		15628795	___	___	___
	1.266	**GRILLE** , RAD (CHEV BASE)(EXC CHR GRL V22)(1989-91)		15628797	___	___	___
	1.266	**GRILLE** , RAD (CHEV-UP/LEVEL) (W/CHR GRL V22)(1989-91)		15628796	___	___	___
26.	1.263	**SUPPORT** , F/END SHEET METAL		15606524	___	___	___
27.	1.267	**SUPPORT** ,RAD GRL((GMC)(EXC CHR GRL V22)(1989-91))(Z88)(EXC V22)		15641735	___	___	___
28.	1.267	**BOLT** ,RAD GRL SUPT((GMC)(EXC CHR GRL V22)(1989-91))(Z88)(EXC V22)		15599042	___	___	___

RPO DEFINITIONS
L05 - ENGINE, 5.7L V8 (DIGITAL FUEL INJECTION)
V22 - GRILLE, RADIATOR (CHROME)
V76 - HOOK, TOW
Z62 - CONVENIENCE PKG, COMFORT & DECOR LEVEL #1
Z88 - CONVERSION, GMT8
V22 - GRILLE,RADIATOR(CHROME)
Z88 - GMC TRUCK

© 1990 GENERAL MOTORS SERVICE PARTS OPERATIONS—LIGHT TRUCK 52R

NOTES

BLANK PAGE

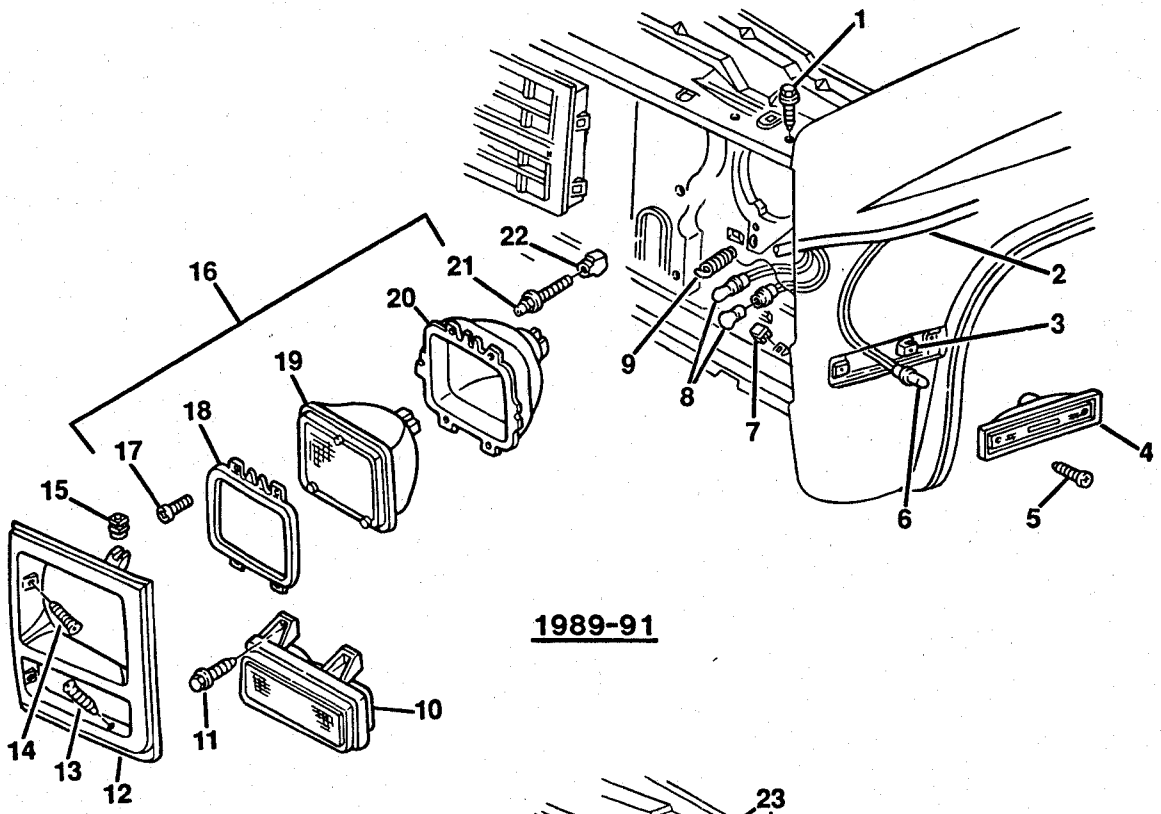

1989-91

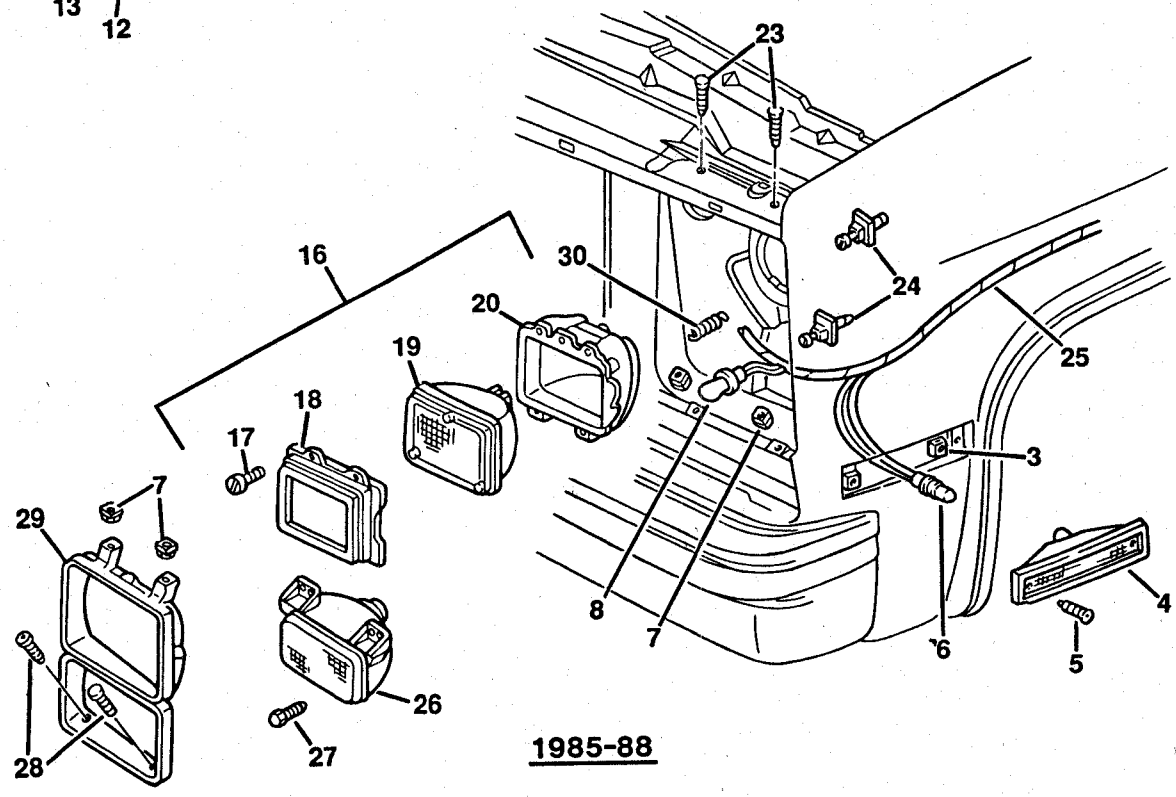

1985-88

TZR02-02@

© 1990 GENERAL MOTORS SERVICE PARTS OPERATIONS—LIGHT TRUCK 52R

1985-1986 CK HEADLAMPS/SINGLE (SINGLE LAMP SYSTEM)
1987-1991 RV HEADLAMPS/SINGLE (SINGLE LAMP SYSTEM)

ILL NO.	GROUP	DESCRIPTION	USAGE	QTY	PART NUMBER	PER VEH	PRICE EACH	PRICE EXT
1.	8.977	**SCREW**, HWH (M4.2X1.41X16, POR)(AS REQD)			10021798			
2.	2.480	**HARNESS**, FWD LP WRG (EXC V22)(1985-88)			12064514			
	2.480	**HARNESS**, FWD LP WRG (W/V22) (1985-88)			12064515			
	2.480	**HARNESS**, FWD LP WRG (EXC V22)(1989-91)			12074106			
	2.480	**HARNESS**, FWD LP WRG (W/V22) (1989-91)			12074107			
3.	8.921	**NUT**, U-SHAPE (M4.2X1.41X.065, ZOR)(AS REQD)			52351724			
4.	2.575	**LAMP**, FRT SI MKR-LH (EXC BODY SI MLDG)			915449			
	2.575	**LAMP**, FRT SI MKR-RH (EXC BODY SI MLDG)			915450			
	2.575	**LAMP**, FRT SI MKR LH (W/BODY SI MLDG)			915557			
	2.575	**LAMP**, FRT SI MKR RH (W/BODY SI MLDG)			915558			
5.	8.977	**SCREW**, PAN HD TORX TAP (M4.2X1.41X25)(AS REQD)			11504661			
6.	2.575	**SOCKET**, W/WIRE, SI MKR LP			6300075			
	8.991	**BULB** (#194)			9421330			
7.	2.729	**NUT**, SPL ANC (NYLON)(AS REQD)			347347			
8.	2.596	**SOCKET**, PK & T/SIG LP			12013813			
	8.991	**BULB** (#3057NA)			9441840			
9.	2.737	**SPRING**, HDLP RET (1989-91)(AS REQD)			10013753			
10.	2.585	**LAMP**, FRT T/SIG-LH (EXC V22) (1989-91)			16510853			
	2.585	**LAMP**, FRT T/SIG-RH (EXC V22) (1989-91)			16510854			
11.	2.587	**SCREW**, PK LP (1/4-20X.75, 275M, NO)(1989-90)			9442283			
	2.587	**BOLT**, PARK LP (1/4-20X13/16, PO)(1991)(6 REQD)			3997227			
12.	2.728	**BEZEL**, HDLP-LH (EXC V22)(1989-91)			15628671			
	2.728	**BEZEL**, HDLP-RH (EXC V22)(1989-91)			15628672			
13.	8.977	**SCREW**, OV HD C/S TORX TAP (M4.2X1.41X35)(AS REQD)			11504785			
14.	8.977	**SCREW**, PAN HEAD (M4.2X1.41X25, FC)(AS REQD)			15605040			
15.	8.921	**NUT**, ANCHOR (8-18, NYLON)(AS REQD)			1377030			
16.	2.725	**CAPSULE**, HDLP (EXC V22)(INCL #17,18,19,20)			5968097			
17.	2.736	**SCREW**, HDLP RET RING (2 REQD)			5966249			
18.	2.731	**RING**, HDLP RET (EXC V22)			5969466			
19.	2.727	**HEADLAMP UNIT**, CAPSULE (SEALED BEAM)(EXC V22)			5968098			
20.	2.726	**RING**, HDLP MT (EXC V22)			5968095			
21.	2.737	**SCREW**, HDLP AIM (1989)(AS REQD)			15616310			
	2.737	**BOLT**, HDLP ADJ (1990-91)(AS REQD)			15649136			
22.	2.737	**NUT**, HDLP AIM ANCHOR (1989-90)			12337988			
23.	8.977	**SCREW**, OV HD C/S TORX (M4.2X1.41X20)(AS REQD)			11504659			
24.	2.737	**NUT**, HDLP ADJ(1985-88)			362379			
25.	2.480	**HARNESS**, FWD LP WRG (EXC V22)(1985-88)			12064514			

© 1990 GENERAL MOTORS SERVICE PARTS OPERATIONS—LIGHT TRUCK 52R

26.	2.585	**LAMP**, PK & T/SIG (EXC V22) (1985-88)	.....	**915908**	____	____	____
27.	8.977	**SCREW**, HWH (1/4-20X7/8)(AS REQD)	.....	**171031**	____	____	____
28.	8.977	**SCREW**, OV HD CSK C/R WA (M4.2-1.41X30)(AS REQD)	.....	**11503423**	____	____	____
29.	2.728	**BEZEL**, HDLP-LH (EXC V22)((1985-88)(*2)	.....	**15598725**	____	____	____
	2.728	**BEZEL**, HDLP-RH (EXC V22)(1985-88)(*2)	.....	**15598726**	____	____	____
30.	2.737	**SPRING**, HDLP ADJ (1985-88)(2 REQD)	.....	**459461**	____	____	____

NOTE 2: PAINT TO MATCH.

RPO DEFINITIONS
V22-GRILLE RADIATOR CHROME

© 1990 GENERAL MOTORS SERVICE PARTS OPERATIONS—LIGHT TRUCK 52R

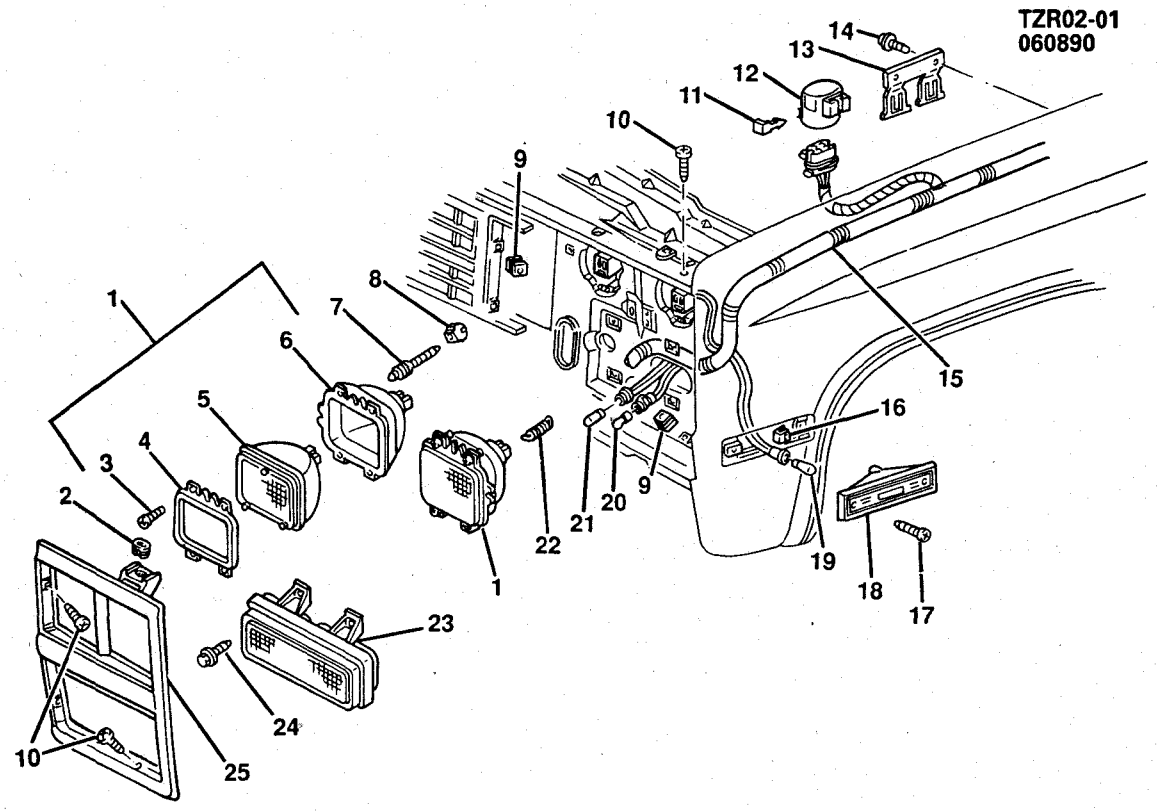

TZR02-01@

1989-1991 RV HEADLAMPS/DUAL FRONT (W/V22)

ILL NO.	GROUP	DESCRIPTION	USAGE	QTY	PART NUMBER	PER VEH	PRICE EACH	PRICE EXT
1.	2.725	**CAPSULE**, HDLP (INBOARD)-LH (INCL#3,4,5,6)			16503161			
	2.725	**CAPSULE**, HDLP (INBOARD)-RH (INCL#3,4,5,6)			16503171			
	2.725	**CAPSULE**, HDLP (OUTBOARD)-LH (INCL#3,4,5,6)			16503162			
	2.725	**CAPSULE**, HDLP (OUTBOARD)-RH (INCL#3,4,5,6)			16503172			
2.	8.921	**NUT**, ANCHOR (8-18 NYLON)(AS REQD)			1377030			
3.	2.736	**SCREW**, MTG RING (AS REQD)			16503553			
4.	2.737	**RING**, AIMING			16503154			
5.	2.727	**SEALBEAM**, HDLP (INBOARD)			16502681			
	2.727	**SEALBEAM**, HDLP (OUTBOARD)			16502682			
6.	2.726	**RING**, HDLP MTG INNER-LH			16503791			
	2.726	**RING**, HDLP MTG OUTER-LH			16503802			
	2.726	**RING**, HDLP MTG INNER-RH			16503801			
	2.726	**RING**, HDLP MTG OUTER-RH			16503792			
7.	2.737	**SCREW**, HDLP AIM (1989)			15616310			
	2.737	**BOLT**, HDLP ADJ (1990-91)			15649136			

© 1990 GENERAL MOTORS SERVICE PARTS OPERATIONS—LIGHT TRUCK 52R

CONTINUED

8.	2.737	**NUT**, HDLP AIM ANCHOR (AS REQD)		12337988	___	___	___
9.	2.729	**NUT**, SPL ANC (NYLON)(AS REQD)		347347	___	___	___
10.	8.977	**SCREW**, PAN HD (M4.2X1.41X25, FC)(AS REQD)		15605040	___	___	___
11.	N.S.	**RETAINER**			___	___	___
12.	1.055	**RELAY**, ENG COOL FAN		14089936	___	___	___
13.	3.306	**BRACKET**, FUEL PUMP RELAY		15551608	___	___	___
14.	1.055	**BOLT**, HDLP RELAY BRKT (2 REQD)		15599042	___	___	___
15.	2.480	**HARNESS**, FWD LP WRG		12074107	___	___	___
16.	N.S.	**NUT**, SPRING (8-18)			___	___	___
17.	8.977	**SCREW**, PAN HD (M4.2X1.41X25 SST)(AS REQD)		11504661	___	___	___
18.	2.575	**LAMP**, FRT SI MKR-LH (EXC BODY SI MLDG)		915449	___	___	___
	2.575	**LAMP**, FRT SI MKR-RH (EXC BODY SI MLDG)		915450	___	___	___
	2.575	**LAMP**, FRT SI MKR-LH (W/BODY SI MLDG)		915557	___	___	___
	2.575	**LAMP**, FTR SI MKR-RH (W/BODY SI MLDG)		915558	___	___	___
19.	8.991	**BULB** (#194)		9421330	___	___	___
20.	8.991	**BULB** (#3057NA)		9441840	___	___	___
21.	8.991	**BULB** (#194NA AMBER)		9438068	___	___	___
22.	2.737	**SPRING**, HDLP RET		10013753	___	___	___
23.	2.585	**LAMP**, FRT T/SIG-LH (COMPONENTS SERV)		5975227	___	___	___
	2.585	**LAMP**, FRT T/SIG-RH (COMPONENTS SERV)		5975228	___	___	___
	2.596	**SOCKET**, W/CABLE,PARK & T/SIG LP		12076946	___	___	___
	8.991	**BULB** (#3057NA)		9441840	___	___	___
	2.596	**SOCKET**, W/CABLE,FRT,PARK LP		8912750	___	___	___
	8.991	**BULB** (#194NA AMBER)		9438068	___	___	___
24.	2.587	**SCREW**, PK LP (AS REQD)		9442283	___	___	___
25.	2.728	**BEZEL**, HDLP-LH (CHEV)		15628669	___	___	___
	2.728	**BEZEL**, HDLP-RH (CHEV)		15628670	___	___	___
	2.728	**BEZEL**, HDLP-LH (GMC)		15628667	___	___	___
	2.728	**BEZEL**, HDLP-RH (GMC)		15628668	___	___	___

© 1990 GENERAL MOTORS SERVICE PARTS OPERATIONS—LIGHT TRUCK 52R

NOTES

BLANK PAGE

© 1990 GENERAL MOTORS SERVICE PARTS OPERATIONS—LIGHT TRUCK 52R

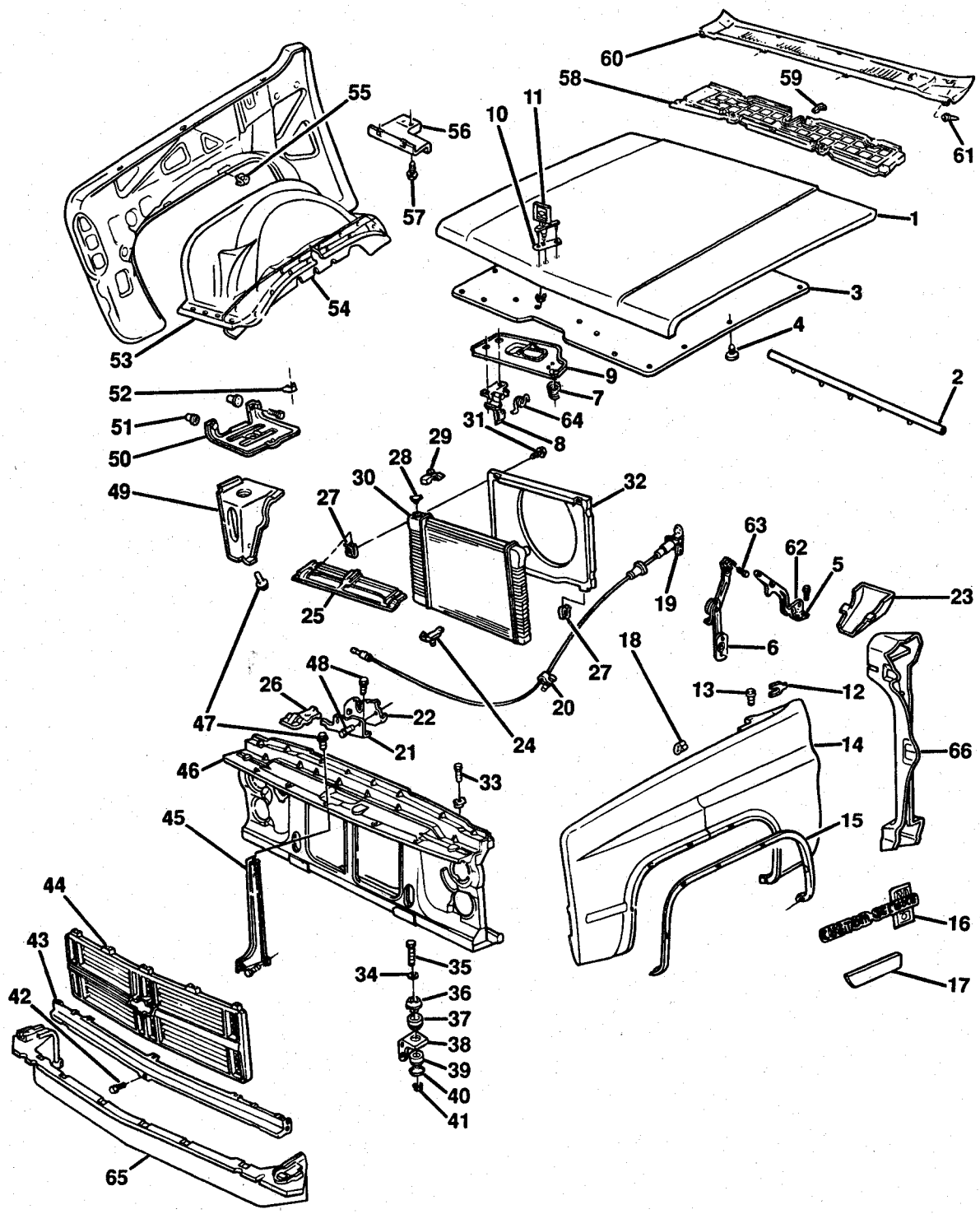

TZR08-01@

© 1990 GENERAL MOTORS SERVICE PARTS OPERATIONS—LIGHT TRUCK 52R

1987-1991 RV SHEET METAL/FRONT END

NOTE: QUANTITY IS ONE PER ASSEMBLY UNLESS OTHERWISE SPECIFIED.

ILL NO.	GROUP	DESCRIPTION	USAGE	QTY	PART NUMBER	PER VEH	PRICE EACH	PRICE EXT
1.	8.000	**HOOD** (1985-90)			15571640			
	8.000	**HOOD** (1991)			15629509			
2.	8.010	**SEAL**, HOOD RR			14018523			
3.	8.021	**INSULATOR**, HOOD PNL (57X.50X70)			12306178			
	8.021	**INSULATOR**, HOOD (DIESEL) (1991)			15641298			
	8.021	**INSULATOR**, HOOD (LL4)(10500 GVW)			15641299			
4.	8.950	**RETAINER**, PUSH-IN (.35X.25)			3977775			
5.	8.015	**HINGE**, HOOD-LH			14043823			
	8.015	**HINGE**, HOOD-RH			14043824			
6.	8.013	**SPRING**, HOOD OPEN ASST-LH			14021253			
	8.013	**SPRING**, HOOD OPEN ASST-RH			14021254			
7.	8.083	**SPRING**, HOOD POP-UP			14018532			
8.	8.080	**CATCH**, HOOD LATCH SEC (INCL #64)			14018526			
9.	N.S.	**REINFORCEMENT**, HOOD LATCH (PART OF #1)						
10.	8.055	**SEAL**, HOOD ORNA			12337877			
11.	8.055	**ORNAMENT**, HOOD (CHEV)			14032781			
	8.055	**ORNAMENT**, HOOD (GMC)			14032782			
	8.055	**ORNAMENT**, HOOD (DIESEL)			14039999			
12.	8.143	**SHIM**, FENDER (8.016)(AS REQD)			345819			
13.	8.900	**BOLT**, HEX W/CON WA (3/8-16X1 3/8 275M)(AS REQD)			15641800			
14.	8.130	**FENDER**, FRT-LH			15614467			
	8.130	**FENDER**, FRT-RH (1985-87)			15615335			
	8.130	**FENDER**, FRT-RH (1988-90)			15571642			
	8.130	**FENDER**, FRT-RH (1991)			15614468			
15.	8.132	**MOLDING**, FENDER WHL OPG-LH (BRIGHT)(W/B96)			14022805			
	8.132	**MOLDING**, FENDER WHL OPG-RH (BRIGHT)(W/B96)			14022806			
	8.132	**MOLDING KIT**, FENDER WHL HSG-LH (06-16)(W/B96)(1989-91)(WHL OPG MLDG(B96))			15616313			
	8.132	**MOLDING**, FENDER WHL OPG-RH (06-16)(W/B96)(1989-91)			15616312			
16.	8.147	**PLATE**, FENDER NAME (BLAZER) (1985-88)			14051844			
	8.147	**PLATE**, FENDER NAME (6.2 LITRE DIESEL)			14043697			
	8.147	**PLATE**, FENDER NAME (CUSTOM DELUXE)((CHEV))			14051846			
	8.147	**PLATE**, FENDER NAME (CUSTOM DELUXE)(W/PLASTIC GSKT) ((CHEV))			14051847			
	8.147	**PLATE**, FENDER NAME (SCOTTSDALE)((CHEV))			14051848			
	8.147	**PLATE**, FENDER NAME (SCOTTSDALE 20)((CHEV))			14051849			
	8.147	**PLATE**, FENDER NAME (SCOTTSDALE)((CHEV))			14051850			
	8.147	**PLATE**, FENDER NAME (SILVERADO)((CHEV))			14051851			
	8.147	**PLATE**, FENDER NAME (SILVERADO)((CHEV))			14051852			
	8.147	**PLATE**, FENDER NAME (SILVERADO)((CHEV))			14051853			
	8.147	**PLATE**, FENDER NAME (JIMMY) ((GMC))			14051854			
	8.147	**PLATE**, FENDER NAME (SIERRA 2500)((GMC))			14051856			

© 1990 GENERAL MOTORS SERVICE PARTS OPERATIONS—LIGHT TRUCK 52R

16.	8.147	**PLATE**, FENDER NAME (SIERRA 3500)((GMC))		14051857			
	8.147	**PLATE**, FENDER NAME (HIGH SIERRA 1500)((GMC))		14051858			
	8.147	**PLATE**, FENDER NAME (HIGH SIERRA 2500)((GMC))		14051859			
	8.147	**PLATE**, FENDER NAME (HIGH SIERRA 3500)((GMC))		14051860			
	8.147	**PLATE**, FENDER NAME (SIERRA CLASSIC 1500)((GMC))		14051861			
	8.147	**PLATE**, FENDER NAME (SIERRA CLASSIC 2500)((GMC))		14051862			
	8.147	**PLATE**, FENDER NAME (SIERRA CLASSIC 3500)((GMC))		14051863			
17.	8.132	**MOLDING**, FDR SI LWR RR-LH (BLACK)(W/B84,B88)(1985-88)		15596905			
	8.132	**MOLDING**, FDR SI LWR RR-RH (BLACK)(W/B84,B88)(1985-88)		15596906			
	8.132	**MOLDING**, FDR SI LWR RR-LH (BRIGHT)(W/B85)		15596907			
	8.132	**MOLDING**, FDR SI LWR RR-RH (BRIGHT)(W/B85)		15596908			
	8.132	**MOLDING**, FDR LWR RR-LH (W/B85)(1989-91)		15628787			
	8.132	**MOLDING**, FDR LWR RR-RH (W/B85)(1989-91)		15628788			
18.	8.024	**BUMPER**, HOOD PNL SI(4 REQD)		12337985			
19.	8.075	**CABLE**, HOOD LAT		14039963			
20.	8.965	**RETAINER**, ADJ PLASTIC (7 INCH)		3816659			
21.	8.080	**BRACKET**, HOOD LAT		14018531			
22.	8.080	**LATCH**, HOOD PRIM (CONSIST OF)		14070703			
	8.077	**RETAINER**, HOOD LAT CBL		20051384			
	N.S.	**NUT**, HFH (M8X1.25X7.5, 10 PEOR) (AS REQD)					
23.	8.015	**DEFLECTOR**, HOOD HGE WAT-LH		15569091			
	8.015	**DEFLECTOR**, HOOD HGE WAT-RH					
24.	1.270	**INSULATOR**, RAD MT LWR (51.82MM)(2 REQD)		14018584			
	1.270	**INSULATOR**, RAD MT (78.3 MM)(2 REQD)		6264100			
	1.270	**INSULATOR**, RAD MT (49.78 MM) (4 REQD)		14018568			
	1.270	**INSULATOR**, RAD MT LWR (51.82 MM)(1987-89)((292T)(EXC C60))		14032841			
25.	1.270	**PANEL**, RAD MT UPR					
	1.270	**PANEL**, RAD MT UPR (LH6,LL4, L19)		14039948			
	1.270	**PANEL**, RAD MT UPR (L19,454W) (1987-88)		14018600			
26.	1.277	**BRACKET**, RAD FAN SHRD-LH					
	1.270	**BRACKET**, RAD UPR MTG-LH		14018579			
	1.270	**BRACKET**, RAD UPR MTG-RH		14018580			
	1.270	**BRACKET**, RAD UPR MTG-RH (1988-91)		14063152			
27.	8.921	**NUT**, U-SHAPE (1/4-20, ZP)(AS REQD)		3982098			
28.	1.203	**CAP**, RAD FILLER		6410785			
29.	1.270	**INSULATOR**, RAD MT UPR (SEE CATALOG)					
30.	1.219	**RADIATOR** (SEE CATALOG)					
31.	8.900	**BOLT**, HEX W/FL WA (1/4-20X1, 275M CAD)(AS REQD)		9440334			
32.	1.277	**SHROUD**, RAD FAN (SEE CATALOG)					
33.	8.024	**BUMPER**, HOOD ADJ FRT		472450			
34.	1.270	**WASHER**, RAD SUPT (2 REQD)		14049809			
35.	8.900	**BOLT**, HEX (1/2-13X5, 300M ZOR) (AS REQD)		9439584			
36.	N.S.	**SPACER**, RAD SUPT UPR CUSH (PART OF #37)					
37.	1.270	**CUSHION**, RAD SUPT UPR (INCL #36)		15597600			
38.	1.274	**BRACKET**, RAD SUPT (C/R MODELS)(2 REQD)		14024565			

© 1990 GENERAL MOTORS SERVICE PARTS OPERATIONS—LIGHT TRUCK 52R

CONTINUED

38.	1.274	**BRACKET**, RAD SUPT (K/V MODELS)(2 REQD)		14029193			
39.	1.270	**CUSHION**, RAD SUPT LWR (9.023) (2 REQD)		15597629			
40.	1.270	**RETAINER**, RAD SUPT CUSH (9.011)(AS REQD)		14027472			
41.	8.915	**NUT**, HEX (1/2-13, 301M)(AS REQD)		9414511			
42.	8.080	**SCREW**, HEX W/CON WA (5/16-18X7/8, 275 PHOS)(AS REQD)		473892			
43.	1.263	**PANEL**, F/END (1987-88)		14043880			
	1.263	**PANEL**, F/END (1989-91)		15641829			
44.	1.266	**GRILLE**, RAD (SEE CATALOG)					
45.	1.263	**SUPPORT**, F/END SHEET MET		15606524			
46.	1.270	**SUPPORT**, RAD (COMPLETE) (W/CHR GRL)(1985-88)		15606586			
	1.270	**SUPPORT**, RAD (W/CHR GRL) (1989-91)		15628620			
	1.270	**SUPPORT**, RAD (COMPLETE)(EXC CHR GRL)(1985-88)		15606587			
	1.270	**SUPPORT**, RAD (EXC CHR GRL) (1989-91)		15628622			
47.	8.900	**BOLT**, HEX LG FL WA (5/16-18X7/8, 275 POR)(AS REQD)					
48.	8.080	**BOLT**, HOOD PRIM LAT (8.900)(2 REQD)		11508017			
49.	N.S.	**SUPPORT**, BAT TRAY (PART OF #50)					
50.	2.333	**TRAY**, W/SUPT, BAT-RH		15616326			
	2.333	**TRAY**, BAT W/SUPT-LH (INCL #49)		15594129			
	2.333	**SUPPORT**, BAT TRAY-LH (W/DIESEL)		15616249			
51.	2.334	**NUT**, BATTERY TRAY (3.704)(2 REQD)		3792287			
52.	2.335	**RETAINER**, BAT HOLDN (AS REQD)		14005061			
53.	8.153	**PANEL**, FRT WHL HSE-LH		15594889			
	8.153	**PANEL**, FRT WHL HSE-RH		15594890			
54.	8.153	**SHIELD**, FRT W/H-LH (C/R)		14027793			
	8.153	**SHIELD**, FRT W/H-RH (C/R)		14027794			
	8.153	**SHIELD**, FRT W/H-LH (K/V)		14027795			
	8.153	**SHIELD**, FRT W/H-RH (K/V)		14027796			
	8.153	**SHIELD**, FRT W/H-RH (K/V)(W/FRT QUAD SHKS)		14032786			
55.	8.921	**NUT**, U-SHAPE (5/16-18)(AS REQD)					
56.	8.153	**SHIELD**, FRT W/H PNL SPLASH LOWER REAR-LH		14027645			
	8.153	**SHIELD**, FRT W/H PNL SPLASH-RH		14027646			
57.	16.165	**RETAINER**, PNL HOLE (12.801)(AS REQD)		480534			
58.	16.125	**SCREEN**, AIR INLET W/S FRM & PLENUM PNL		15598709			
59.	16.125	**RETAINER**, AIR INL SCREEN (2 REQD)		14027555			
60.	16.125	**PANEL**, AIR INL GRL		15598708			
61.	16.125	**RETAINER**, AIR INLET GRL PANEL (3 REQD)		15598769			
	16.125	**RETAINER**, AIR INLET GRL PANEL OUTER (2 REQD)		15598770			
62.	8.016	**BOLT**, HEX W/CON WA (3/8-16X1.125)(3.015)(AS REQD)		6271980			
63.	8.080	**SCREW**, HEX W/CON WA (5/16-18X7/8)(AS REQD)		473892			
64.	8.083	**SPRING**, HOOD LATCH SEC CATCH		14018529			
65.	1.272	**DEFLECTOR**, FRT AIR (C/R)		15569084			
	1.272	**DEFLECTOR**, FRT AIR (K/V)(EXC V76)		15569086			
	1.272	**DEFLECTOR**, FRT AIR (W/V76) (1987-91)		15569088			
66.	16.507	**INSULATOR**, F/FDR-LH		14022831			
	16.507	**INSULATOR**, F/FDR-RH		14022832			

RPO DEFINITIONS
B84-BLACK BODY SIDE MOLDING.

© 1990 GENERAL MOTORS SERVICE PARTS OPERATIONS—LIGHT TRUCK 52R

CONTINUED

RPO DEFINITIONS
B85-BRIGHT BODY SIDE MOLDING W/DUAL CHROME ACCENT.
B88-ORNAMATATION,EXTERIOR,BODT SIDE MOLDING(CUSTOM)(BODY COLOR)
B96-ORNAMATATION,EXTERIOR,WHEEL OPENING MOLDING(BRIGHT)

NOTES

BLANK PAGE

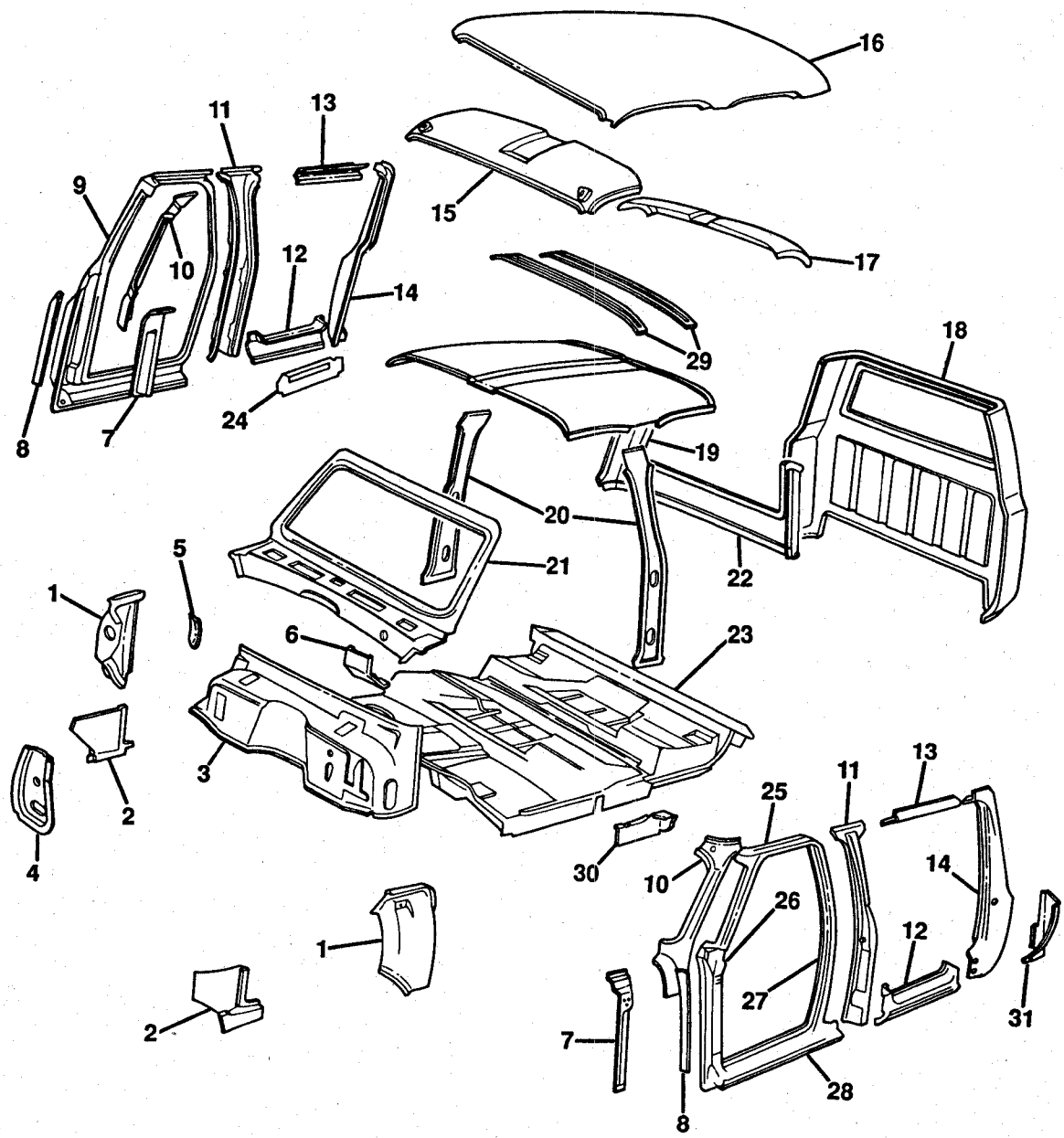

TZR16-02@

© 1990 GENERAL MOTORS SERVICE PARTS OPERATIONS—LIGHT TRUCK 52R

1985-1986 CK(43) SHEET METAL/BODY
1987-1991 RV(43) SHEET METAL/BODY

NOTE: QUANTITY IS ONE PER ASSEMBLY UNLESS OTHERWISE SPECIFIED.

ILL NO.	GROUP	DESCRIPTION	USAGE	QTY	PART NUMBER	PER VEH	PRICE EACH	PRICE EXT
1.	16.551	**PANEL**, PLNM SI-LH			14027481			
	16.551	**PANEL**, PLNM SI-RH			14027482			
2.	16.551	**PANEL**, COWL SI INNER-LH			15606531			
	16.551	**PANEL**, COWL SI INNER-RH			15606532			
3.	16.550	**PANEL**, DASH & COWL (W/A.C.)			15593843			
	16.550	**PANEL**, DASH & COWL (EXC A.C.)			15593569			
4.	16.550	**REINFORCEMENT**, DA PNL			15593577			
5.	9.264	**DEFLECTOR**, PLENUM WAT-RH (EXC A.C.)			15591096			
6.	4.634	**BRACE**, BRK PED BRKT			467282			
7.	16.507	**REINFORCEMENT**, F/D FRM HGE-LH			377785			
	16.507	**REINFORCEMENT**, F/D FRM HGE-RH			377786			
8.	16.507	**EXTENSION**, F/D OPG FRM (2 REQD)			6262042			
9.	16.150	**FRAME**, FRT S/D OPG-LH(*1)			15619934			
	16.150	**FRAME**, FRT S/D OPG-RH(*1)			15615252			
10.	16.585	**PANEL**, F/D OPG FRM TR-LH			15606387			
	16.585	**PANEL**, F/D OPG FRM TR-RH			14022848			
11.	16.507	**PILLAR**, W/REINF, SI R/D HGE-LH			15579894			
	16.507	**PILLAR**, W/REINF, SI R/D HGE-RH			15579895			
12.	16.603	**PANEL**, RKR RR OTR-LH			15571673			
	16.603	**PANEL**, RKR RR OTR-RH			15571674			
13.	16.585	**PANEL**, RR S/D HDR-LH			15606437			
	16.585	**PANEL**, RR S/D HDR-RH			15606438			
14.	16.585	**PILLAR**, RR S/D LK-LH			15606607			
	16.585	**PILLAR**, RR S/D LK-RH			15606608			
15.	16.585	**PANEL**, RF FRT INR			6273680			
16.	16.585	**PANEL**, RF OTR			6262113			
17.	16.585	**PANEL**, RF RR INR			349657			
18.	16.587	**PANEL**, BODY RR OTR			14067884			
19.	16.585	**PANEL**, RF INTER INR			349654			
20.	16.520	**PANEL**, RR S/D H/PLR INR-LH			371397			
	16.520	**PANEL**, RR S/D H/PLR INR-RH			364252			
21.	16.550	**PANEL**, W/S FRM & PLNM			15629646			
22.	16.592	**PANEL**, BODY RR INR			467289			
23.	16.545	**PANEL**, FLR & TOE COMPLETE (W/A.T.)			14070529			
	16.545	**PANEL**, FLR COMPLETE (W/M.T.)			15606501			
24.	16.603	**PANEL**, RKR RR INR-LH			6273155			
	16.603	**PANEL**, RKR RR INR-RH			6273156			
25.	16.150	**FRAME**, F/D UPR-LH (1985-87)(*2)			347113			
	16.150	**FRAME**, F/D UPR-RH (1985-87)(*2)			347114			
26.	16.507	**PILLAR**, F/D FRM HGE-LH (1985-87)(*2)			347111			
	16.507	**PILLAR**, F/D FRM HGE-RH (1985-87)(*2)			347112			
27.	16.507	**PILLAR**, F/D FRM LK-LH (1985-87) (*2)			347115			
	16.507	**PILLAR**, F/D FRM LK-RH (1985-87) (*2)			347116			
28.	16.603	**PANEL**, RKR-LH (1985-87)(*2)			14095607			
	16.603	**PANEL**, RKR-RH (1985-87)(*2)			14095608			
29.	16.585	**BOW**, RF PNL (2 REQD)			349355			
30.	16.545	**REINFORCEMENT**, FLR PNL EXT-LH			6273587			
	16.545	**REINFORCEMENT**, FLR PNL EXT-RH			6273588			
31.	16.600	**PANEL**, FRT S/D OPG FRM FIL-LH			15596901			
	16.600	**PANEL**, FRT S/D OPG FRM FIL-RH			15646966			
32.	8.015	**DEFLECTOR**, PLNM S/PNL WAT-LH			14043793			

© 1990 GENERAL MOTORS SERVICE PARTS OPERATIONS—LIGHT TRUCK 52R

32.	8.015	**DEFLECTOR**, PLNM SI PNL AIR OTLT WAT-RH	**14043794**	____	____	____
33.	9.264	**DEFLECTOR**, PLNM S/PNL WAT-LH (EXC A.C.)	**15591095**	____	____	____
34.	16.714	**PLUG**, ST BELT UPR BELT HOLE (EXC AS3)	**326158**	____	____	____
35.	16.714	**PLATE**, ST BELT UPR ANC (2 REQD)	**362435**	____	____	____
36.	16.714	**PLATE**, ST BELT UPR ANC (W/AK9)(2 REQD)	**365995**	____	____	____

NOTE 1: INCLUDES ITEMS 25,26,27 & 28.
NOTE 2: ALSO PART OF ITEM #9.FRAME ASSEMBLY IS NOT SERVICED SEPARATLY AFTER 1987

RPO DEFINITIONS
AK9- RESTRAINT SYS/REAR SEAT SHOULDER RETR, 3 POINT.
AS3-SEAT/REAR SUBURBAN.

© 1990 GENERAL MOTORS SERVICE PARTS OPERATIONS—LIGHT TRUCK 52R

NOTES

BLANK PAGE

© 1990 GENERAL MOTORS SERVICE PARTS OPERATIONS—LIGHT TRUCK 52R

TZR16-03
062790

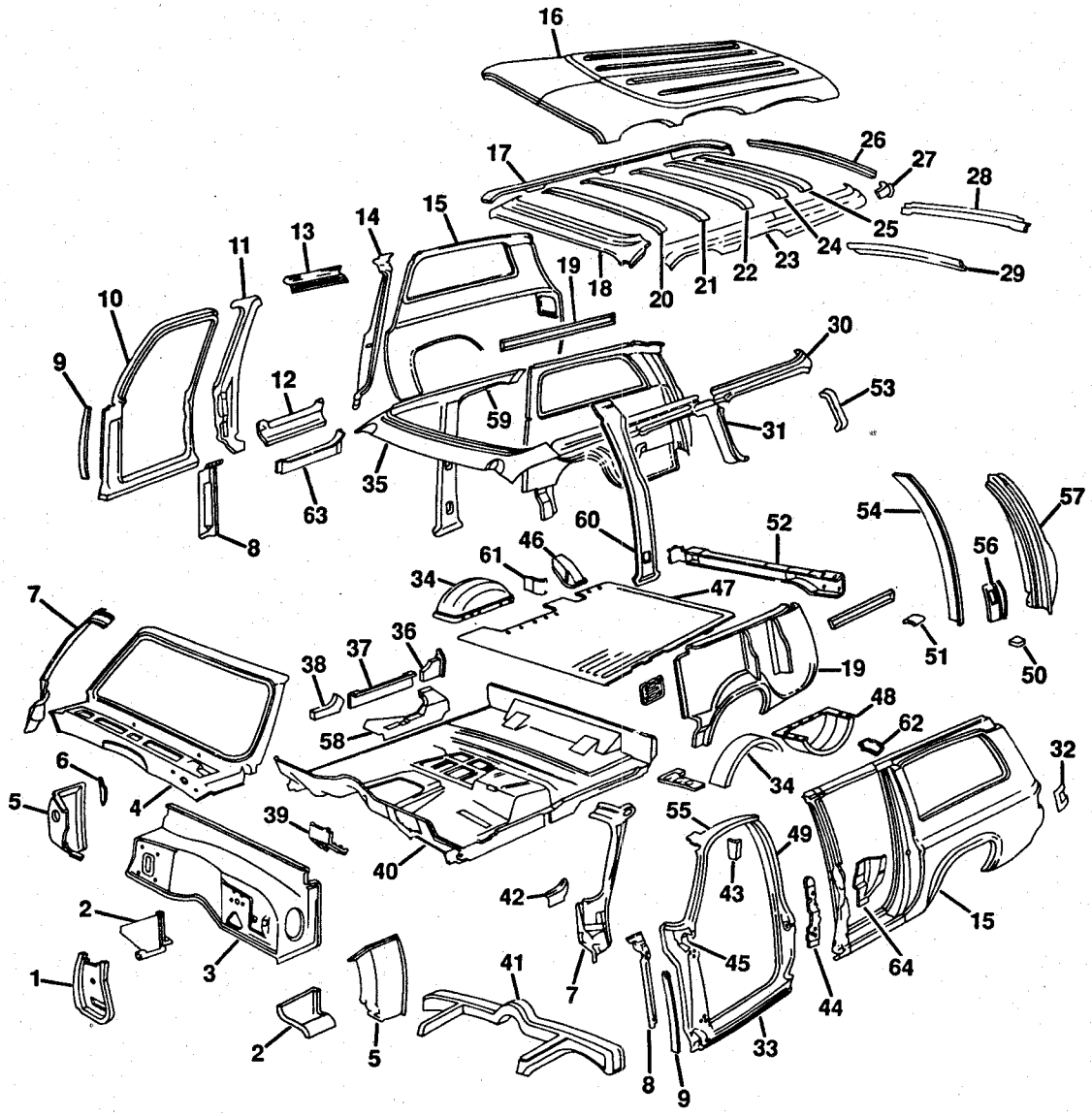

TZR16-03@

1985-1986 CK(06) SHEET METAL/BODY
1987-1991 RV(06) SHEET METAL/BODY

NOTE: QUANTITY IS ONE PER ASSEMBLY UNLESS OTHERWISE SPECIFIED.

ILL NO.	GROUP	DESCRIPTION	USAGE	QTY	PART NUMBER	PER VEH	PRICE EACH	PRICE EXT
1.	16.550	**REINFORCEMENT**, DA PNL			15593577			
2.	16.551	**PANEL**, COWL SI INR-LH			15606531			
	16.551	**PANEL**, COWL SI INR-RH			15606532			
3.	16.550	**PANEL**, DASH & COWL (W/A.C.)			15593843			
	16.550	**PANEL**, DASH & COWL (EXC A.C.)			15593569			
4.	16.550	**PANEL**, W/S FRM & PLNM			15629646			
5.	16.551	**PANEL**, PLNM SI-LH			14027481			
	16.551	**PANEL**, PLNM SI-RH			14027482			
6.	N.S.	**DEFLECTOR** (PART OF #5)						
7.	16.585	**PANEL**, FRT S/D OPG FRM-LH			15606387			
	16.585	**PANEL**, FRT S/D OPG FRM-RH			14022848			
8.	16.507	**REINFORCEMENT**, FRT S/D OPG FRM HGE-LH			377785			
	16.507	**REINFORCEMENT**, FRT S/D OPG FRM HGE-RH			377786			
9.	16.507	**EXTENSION**, SI F/D OPG FRM (2 REQD)			6262042			
10.	16.150	**FRAME**, FRT S/D OPG-LH(*1)			15619934			
	16.150	**FRAME**, FRT S/D OPG-RH(*1)			15615252			
11.	16.507	**PILLAR**, W/REINF, SI R/D HGE-LH			15579894			
	16.507	**PILLAR**, W/REINF, SI R/D HGE-RH			15579895			
12.	16.603	**PANEL**, RKR RR OTR-LH			15571673			
	16.603	**PANEL**, RKR RR OTR-RH			15571674			
13.	16.585	**PANEL**, RR S/D HDR-LH			15606437			
	16.585	**PANEL**, RR S/D HDR-RH			15606438			
14.	16.507	**PILLAR**, W/REINF, SI R/D LK-LH (1985-87)			14038091			
	N.S.	**PILLAR**, SI R/D LK-LH (1988-89) (PART OF #19)						
	16.507	**PILLAR**, W/REINF, SI R/D LK-RH (1985-87)			14038092			
	N.S.	**PILLAR**, SI R/D LK-RH (1988-89) (PART OF #19)						
15.	16.570	**PANEL**, BODY SI OTR-LH			15571669			
	16.570	**PANEL**, BODY SI OTR-RH			15571670			
16.	16.585	**PANEL**, ROOF			15624245			
17.	N.S.	**RAIL**, SI RF (PART OF #16)						
18.	N.S.	**REINFORCEMENT**, RF FRT (PART OF #16)						
19.	16.570	**PANEL**, BODY SI INNER COMPL-LH (EXC E55)			15616756			
	16.570	**PANEL**, BODY SI INTER COMPL-RH (W/ZW9)			15579893			
	16.570	**PANEL**, BODY SI INTER COMPL-LH (W/E55)			15579890			
	16.570	**PANEL**, BODY SI INNER-RH (W/E55)			15634240			
20.	N.S.	**BOW** (PART OF #16)						
21.	N.S.	**BOW** (PART OF #16)						
22.	N.S.	**BOW** (PART OF #16)						
23.	N.S.	**REINFORCEMENT** (PART OF #16)						
24.	N.S.	**BOW** (PART OF #16)						
25.	N.S.	**BOW** (PART OF #16)						
26.	N.S.	**PANEL** (PART OF #16)						
27.	N.S.	**REINFORCEMENT** (PART OF #15)						
28.	16.585	**PANEL**, RF RR HDR W/REINFORCEMENT			15617847			
29.	N.S.	**REINFORCEMENT** (PART OF #28)						
30.	N.S.	**PANEL** (PART OF #15)						
31.	16.570	**PANEL**, BODY SI WDO FRT-LH			14043839			
	16.570	**PANEL**, BODY SI WDO FRT-RH			14043840			
32.	2.660	**RETAINER**, T/LP-LH			466715			
	2.660	**RETAINER**, T/LP-RH			466716			
33.	16.603	**PANEL**, RKR-LH (1985-87)(*2)			14095607			

© 1990 GENERAL MOTORS SERVICE PARTS OPERATIONS—LIGHT TRUCK 52R

CONTINUED

33.	16.603	**PANEL**, RKR-RH (1985-87)(*2)		14095608			
34.	16.570	**PANEL**, RR W/H INR-LH		470943			
	16.570	**PANEL**, RR W/H INR-RH		470946			
35.	16.585	**PANEL**, RF FRT HDR		6274821			
36.	N.S.	**REINFORCEMENT** (PART OF #10)					
37.	N.S.	**PANEL** (PART OF #10)					
38.	N.S.	**REINFORCEMENT** (PART OF #10)					
39.	4.634	**BRACE**, BRK PED BRKT		467282			
40.	16.545	**PANEL**, FLR COLUMN SHIFT COMPL (C/R)		15606588			
	16.545	**PANEL**, FLR FLOOR SHIFT COMPL (K/V)		15606590			
41.	N.S.	**SILL** (PART OF #40)					
42.	N.S.	**REINFORCEMENT** (PART OF #10)					
43.	N.S.	**REINFORCEMENT** (PART OF #10)					
44.	N.S.	**REINFORCEMENT** (PART OF #11)					
45.	16.507	**PILLAR**, F/D FRM HGE-LH (1985-87)(*2)		347111			
	16.507	**PILLAR**, F/D FRM HGE-RH (1985-87)(*2)		347112			
46.	3.008	**PANEL**, F/TK FIL PIPE HSG		14073911			
47.	17.400	**PANEL**, RR FLR		15606596			
48.	16.565	**WELL**, SPARE WHEEL		15596982			
49.	16.507	**PILLAR**, F/D FRM LK-LH (1985-87) (*2)		347115			
	16.507	**PILLAR**, F/D FRM LK-RH (1985-87) (*2)		347116			
50.	N.S.	**REINFORCEMENT** (PART OF #47)					
51.	N.S.	**REINFORCEMENT** (PART OF #47)					
52.	16.545	**SILL**, FLR PNL RR CR (W/ZW9)		15606605			
	16.565	**SILL**, FLR PNL RR CR (W/E55)		15606585			
53.	N.S.	**PANEL** (PART OF #15)					
54.	N.S.	**PANEL** (PART OF #15)					
55.	16.150	**FRAME**, F/D UPR-LH (1985-87)(*2)		347113			
	16.150	**FRAME**, F/D UPR-RH (1985-87)(*2)		347114			
56.	N.S.	**REINFORCEMENT** (PART OF #15)					
57.	N.S.	**PILLAR** (PART OF #19)					
58.	16.545	**REINFORCEMENT**, FLR PNL EXT-LH		6273587			
	16.545	**REINFORCEMENT**, FLR PNL EXT-RH		6273588			
59.	16.585	**PANEL**, RF SI HDR-LH		15606371			
	16.585	**PANEL**, RF SI HDR-RH		15606484			
60.	16.520	**PANEL**, RR S/D H/PLR INR-LH		371397			
	16.520	**PANEL**, RR S/D H/PLR INR-RH		364252			
61.	16.570	**PANEL**, RR W/H PNL EXTN-RH		470940			
62.	16.545	**COVER**, BODY SI WDO FRT PNL HOLE (EXC YE9)(2 REQD)		334133			
63.	16.603	**PANEL**, RKR RR INR-LH		6273155			
	16.603	**PANEL**, RKR RR INR-RH		6273156			
64.	16.570	**REINFORCEMENT**, R/D H/PLR (W/E55)(2 REQD)		15606550			
65.	16.714	**PLUG**, ST BELT UPR BOLT HOLE (AS REQD)		326158			
66.	16.714	**PLATE**, ST BELT UPR ANC (2 REQD)		362435			
67.	16.570	**COVER**, BODY SI INR PNL HOLE-LH		359267			
68.	16.570	**COVER**, BODY SI INR PNL HOLE-RH		359268			
69.	16.715	**PLATE**, I/SEAT BK LAT ANC (2 REQD)		15606620			
70.	8.015	**DEFLECTOR**, PLNM SI PNL WAT-LH		14043793			
	8.015	**DEFLECTOR**, PLNM SI PNL WAT-RH		14043794			
71.	9.264	**DEFLECTOR**, PLENUM S/PNL WAT-LH (EXC A.C.)		15591095			
	9.264	**DEFLECTOR**, PLENUM S/PNL WAT-RH (EXC A.C.)		15591096			

NOTE 1: INCLUDES ITEMS 33,45,49,55.
NOTE 2: ALSO PART OF ASM, ITEM #10.

RPO DEFINITIONS
AK9-RESTRAINT SYS/REAR SEAT SHLDR RETR,3 POINT.

© 1990 GENERAL MOTORS SERVICE PARTS OPERATIONS—LIGHT TRUCK 52R

CONTINUED

RPO DEFINITIONS
E55-END GATE/SUBURBAN.
YE9-EQUIPMENT PACKAGE/COMFORT, CONVENIENCE & DECOR.
ZW9-BASE BODY OR CHASSIS.

© 1990 GENERAL MOTORS SERVICE PARTS OPERATIONS—LIGHT TRUCK 52R

NOTES

NOTES

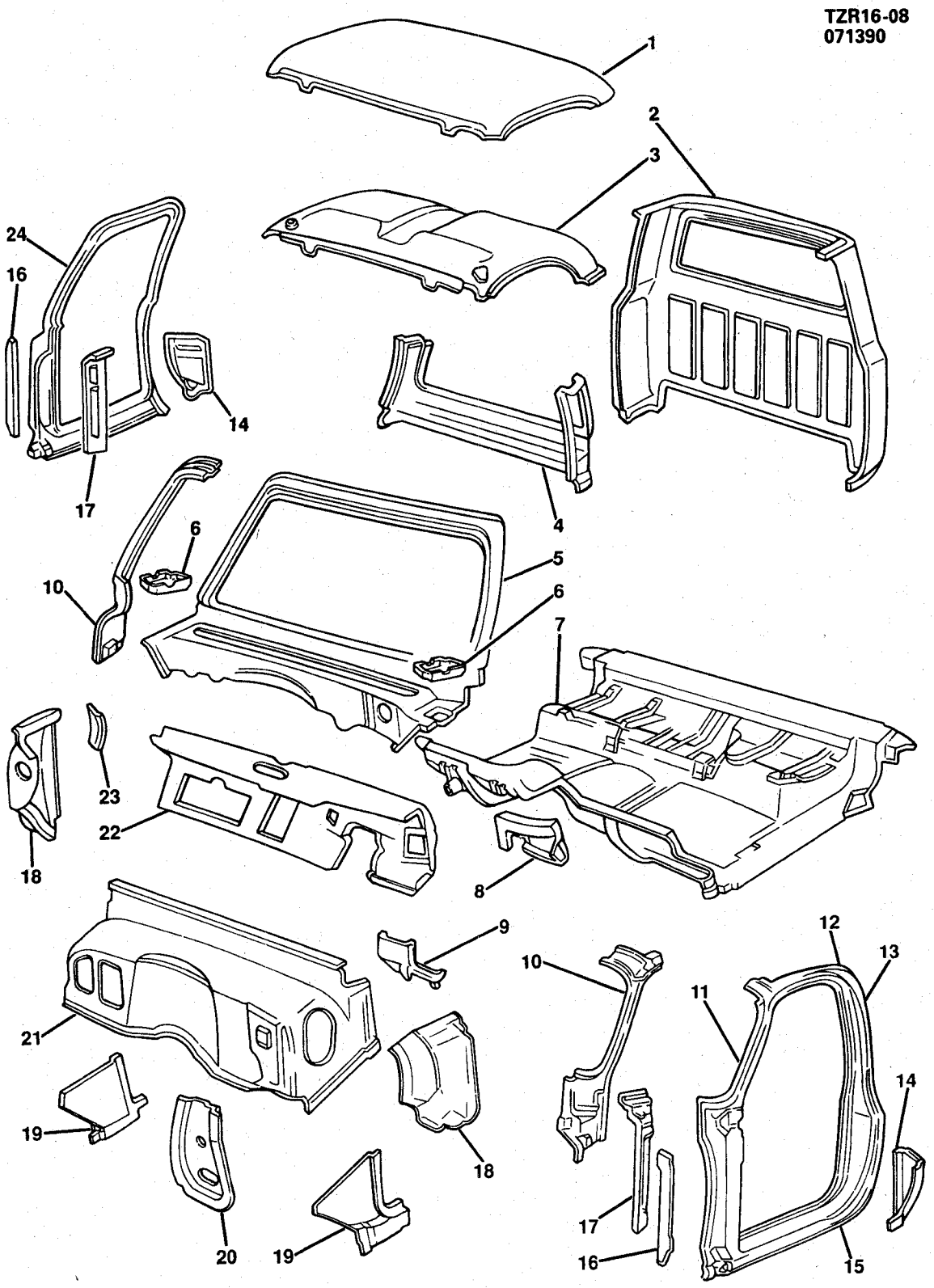

© 1990 GENERAL MOTORS SERVICE PARTS OPERATIONS—LIGHT TRUCK 52R

1985-1986 CK(03) SHEET METAL/BODY SIDE & ROOF
1987-1989 RV(03) SHEET METAL/BODY SIDE & ROOF

ILL NO.	GROUP	DESCRIPTION	USAGE	QTY	PART NUMBER	PER VEH	PRICE EACH	PRICE EXT
1.	16.585	**PANEL**, RF OTR (W/RF MRK LP U01)			685488			
	16.585	**PANEL**, RF OTR (EXC RF MRKR LP U01)			3999814			
2.	16.587	**PANEL**, BODY RR OTR			14067884			
3.	16.585	**PANEL**, RF INR (W/COURTESY LAMP C91)			15591054			
	16.585	**PANEL**, RF INR (EXC COURTESY LAMP C91)			3999884			
4.	16.592	**PANEL**, BODY RR INR			467289			
5.	16.550	**PANEL**, W/S FRM & PLNM			15629646			
	8.015	**DEFLECTOR**, PLNM SI PNL AIR OTLT WAT-LH			14043793			
	8.015	**DEFLECTOR**, PLNM SI PNL AIR OTLT WAT-RH			14043794			
6.	9.264	**DEFLECTOR**, PLNM S/PNL WAT-LH			14043793			
	9.264	**DEFLECTOR**, PLNM S/PNL WAT-RH			14043794			
7.	16.545	**PANEL**, FLR & TOE COMPLETE (W/COLUMN SHIFT)			14070521			
	16.545	**PANEL**, FLR & TOE COMPLETE (W/FLOOR SHIFT)			15531533			
8.	16.800	**SHIELD**, FLR & TOE PNL HT			14043813			
9.	4.634	**BRACE**, BRK PED BRKT			467282			
10.	16.585	**PANEL**, F/D OPG FRM TR-LH			15606387			
	16.585	**PANEL**, F/D OPG FRM TR-RH			14022848			
11.	16.507	**PILLAR**, F/D FRM HGE-LH(1985-87)(*2)			347111			
	16.507	**PILLAR**, F/D FRM HGE-RH(1985-87)(*2)			347112			
12.	16.150	**FRAME**, F/D UPR-LH(1985-87)(*2)			347113			
	16.150	**FRAME**, F/D UPR-RH(1985-87)(*2)			347114			
13.	16.507	**PILLAR**, F/D FRM LK-LH(1985-87)(*2)			347115			
	16.507	**PILLAR**, F/D FRM LK-RH(1985-87)(*2)			347116			
14.	16.600	**FILLER**, F/D OPG FRM-LH			15596901			
	16.150	**PANEL**, SI F/D OPG FRM FILLER-RH (1985-87)			15646966			
15.	16.603	**PANEL**, RKR-LH(1985-87)(*2)			14095607			
	16.603	**PANEL**, RKR-RH(1985-87)(*2)			14095608			
16.	16.507	**EXTENSION**, F/D OPG FRM			6262042			
17.	16.507	**REINFORCEMENT**, F/D OPG FRM HGE-LH			377785			
	16.507	**REINFORCEMENT**, F/D OPG FRM HGE-RH			377786			
18.	16.551	**PANEL**, PLENUM SI-LH			14027481			
	16.551	**PANEL**, PLENUM SI-RH			14027482			
19.	16.551	**PANEL**, COWL SI INR-LH			15606531			
	16.551	**PANEL**, COWL SI INR-RH			15606532			
20.	16.550	**REINFORCEMENT**, DA PNL			15593577			
21.	16.550	**PANEL**, DASH & COWL (W/A.C.)			15593843			
	16.550	**PANEL**, DASH & COWL (EXC A.C.)			15593569			
22.	16.080	**PANEL**, INST (1985-88)			15590559			
	16.080	**PANEL**, INST (1989)			15610124			
23.	9.264	**DEFLECTOR**, PLENUM WAT-LH (EXC A.C.)			15591095			
	9.264	**DEFLECTOR**, PLENUM WAT-RH			15591096			
24.	16.150	**FRAME**, F/D OPG-LH(*1)			15615253			
	16.150	**FRAME**, F/D OPG-RH(*1)			14039174			

NOTE 1: INCLUDES ITEMS 20,21,22 &23.
NOTE 2: ALSO PART OF ASM ITEM #7.

© 1990 GENERAL MOTORS SERVICE PARTS OPERATIONS—LIGHT TRUCK 52R

TZR16-09
071190

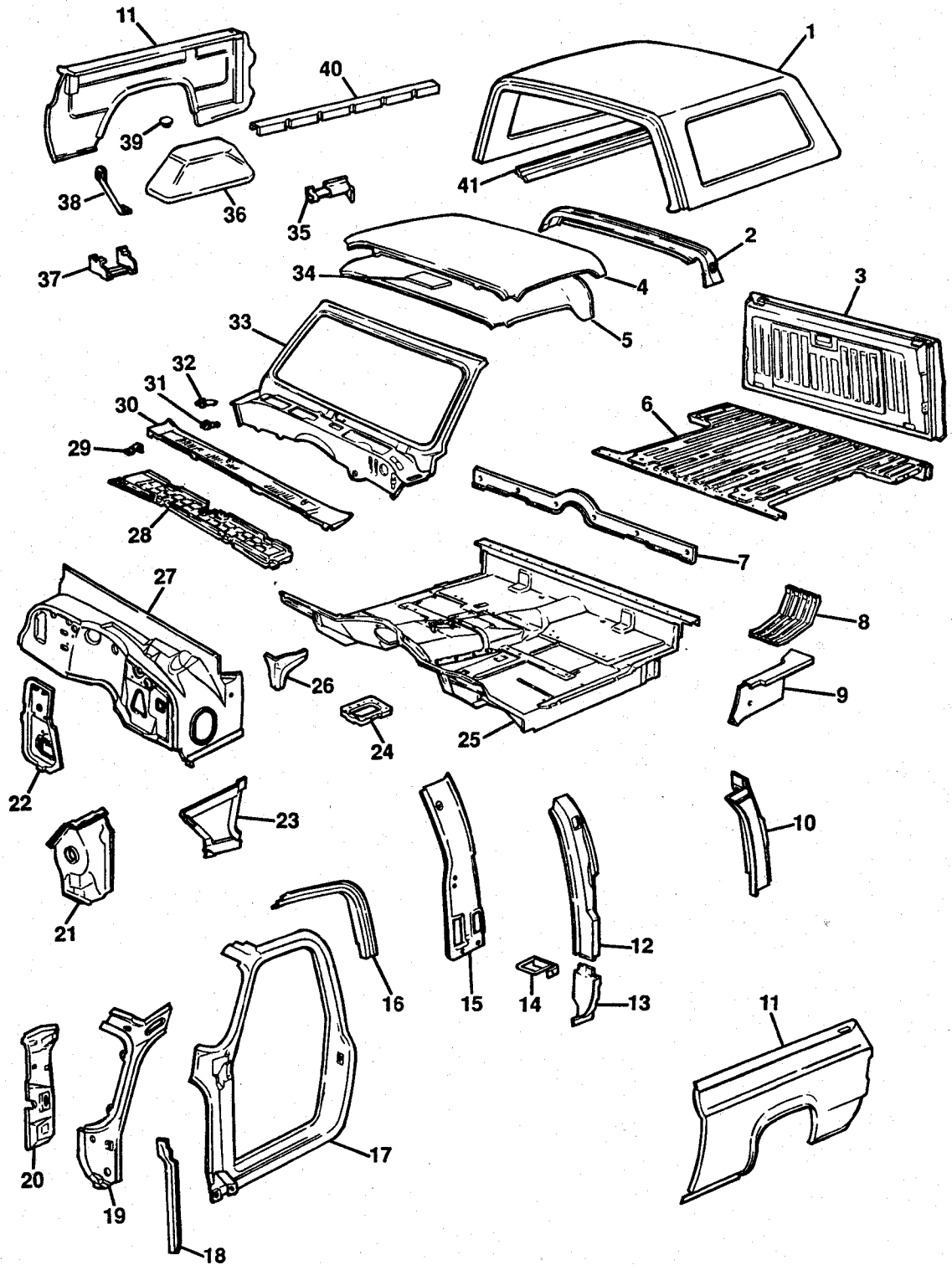

TZR16-09@

1985-1986 K(16) SHEET METAL/BODY SIDE & ROOF
1987-1991 V(16) SHEET METAL/BODY SIDE & ROOF

ILL NO.	GROUP	DESCRIPTION	USAGE	QTY	PART NUMBER	PER VEH	PRICE EACH	PRICE EXT
1.	16.585	**TOP** ,REMOVABLE((WHITE)(PAINT TO MATCH))			15565342			
2.	16.585	**REINFORCEMENT** , RF PNL			358543			
3.	17.185	**GATE** , END (WLDG ASM ONLY)			15571691			
4.	16.585	**PANEL** , RF OTR			355616			
5.	16.585	**PANEL** , RF INR			15610112			
6.	17.400	**PLATFORM**			15571692			
7.	16.800K	**PLATE** ,FLR PNL TRIM(PAINT AS REQD)			474022			
8.	3.602	**SHIELD** , MUFF HEAT REFLECTOR			471089			
9.	16.545	**EXTENSION** , FLR & TOE PNL RR-LH			466743			
	16.545	**EXTENSION** , FLR & TOE PNL RR-RH			466744			
10.	16.570	**EXTENSION** , BODY SI OTR PNL-LH			355617			
	16.570	**EXTENSION** , BODY SI OTR PNL-RH			355618			
11.	17.505	**SIDE ASM** , BODY (COMPL)-LH			15606319			
	17.505	**SIDE ASM** , BODY (COMPL)-RH			15606320			
12.	16.520	**REINFORCEMENT** , BODY LK PLR-LH			466723			
	16.520	**REINFORCEMENT** , BODY LK PLR-RH			466724			
13.	16.507	**EXTENSION** , F/D LK PLR REINF-LH			466751			
	16.507	**EXTENSION** , F/D LK PLR REINF-RH			466752			
14.	16.600	**FILLER** , F/D OPG FRM-LH			473873			
	16.600	**FILLER** , F/D OPG FRM-RH			473874			
15.	16.520	**PANEL** , BODY LK PLR TR-LH			15602381			
	16.520	**PANEL** , BODY LK PLR TR-RH			466720			
16.	16.642	**MOLDING** , RF DRIP-LH			355679			
	16.642	**MOLDING** , RF DRIP-RH			355680			
17.	16.150	**FRAME** , FRT S/D OPG-LH			15615253			
	16.150	**FRAME** , FRT S/D OPG-RH			14039174			
18.	16.507	**EXTENSION** , F/D OPG FRM			6262042			
19.	16.585	**PANEL** , F/D OPG FRM TR-LH			15606387			
	16.585	**PANEL** , F/D OPG FRM TR-RH			14022848			
20.	16.507	**REINFORCEMENT** , SI F/D OPG FRM HGE-LH			377785			
	16.507	**REINFORCEMENT** , SI F/D OPG FRM HGE-RH			377786			
21.	16.551	**PANEL** , PLNM SI-LH			14027481			
	16.551	**PANEL** , PLNM SI-RH			14027482			
22.	16.550	**REINFORCEMENT** , DA PNL			15593577			
23.	16.551	**PANEL** , COWL SI INR-LH			15606531			
	16.551	**PANEL** , COWL SI INR-RH			15606532			
24.	16.545	**REINFORCEMENT** , FLR PNL TRFR CASE OPG			14070536			
25.	16.545	**PANEL** , FLR & TOE (COMPL)			15606527			
26.	9.264	**DEFLECTOR** , PLENUM WAT-LH (EXC A/C)			15591095			
	9.264	**DEFLECTOR** , PLENUM WAT-RH (EXC A/C)			15591096			
27.	16.550	**PANEL** , DASH & COWL (EXC A.C.)			15593569			
	16.550	**PANEL** , DASH & COWL (W/A.C.)			15593843			
28.	16.125	**SCREEN** , W/S FRM & PLENUM PNL			15598709			
29.	16.125	**RETAINER** , AIR INL SCREEN			14027555			
30.	16.125	**PANEL** , AIR INL GRL			15598708			
31.	16.125	**RETAINER** , COWL TO VENT GRL			15598769			
32.	16.125	**RETAINER** , COWL TO VENT GRL (OUTER)			15598770			
33.	16.550	**PANEL** , W/S FRM & PLNM			15629646			
34.	16.742	**INSULATOR** , RF PNL			14032744			
35.	17.505	**SHIELD** , BODY SI PNL-LH			467911			
	17.505	**SHIELD** , BODY SI PNL-RH			467912			
36.	17.505	**PANEL** , W/H-LH			14027451			
	17.505	**PANEL** , W/H-RH			15602384			

© 1990 GENERAL MOTORS SERVICE PARTS OPERATIONS—LIGHT TRUCK 52R

CONTINUED

37.	16.585	REINFORCEMENT, RF FRT INR PNL (1987-91)		15629659	____	____	____
38.	17.505	BRACE, SI OTR PNL		330438	____	____	____
39.	8.973	PLUG, 1.00 DIA HOLE W/WASHER(12.981)		14049810	____	____	____
40.	17.505	SIDE ASM, BODY (COMPL)(LH)		15606319	____	____	____
	17.505	SIDE ASM, BODY (COMPL)(RH)		15606320	____	____	____
41.	16.742	MOLDING, RF SI LWR-LH		358535	____	____	____
	16.742	MOLDING, RF SI LWR-RH		358536	____	____	____

© 1990 GENERAL MOTORS SERVICE PARTS OPERATIONS—LIGHT TRUCK 52R

NOTES

BLANK PAGE

TZR16-10
071690

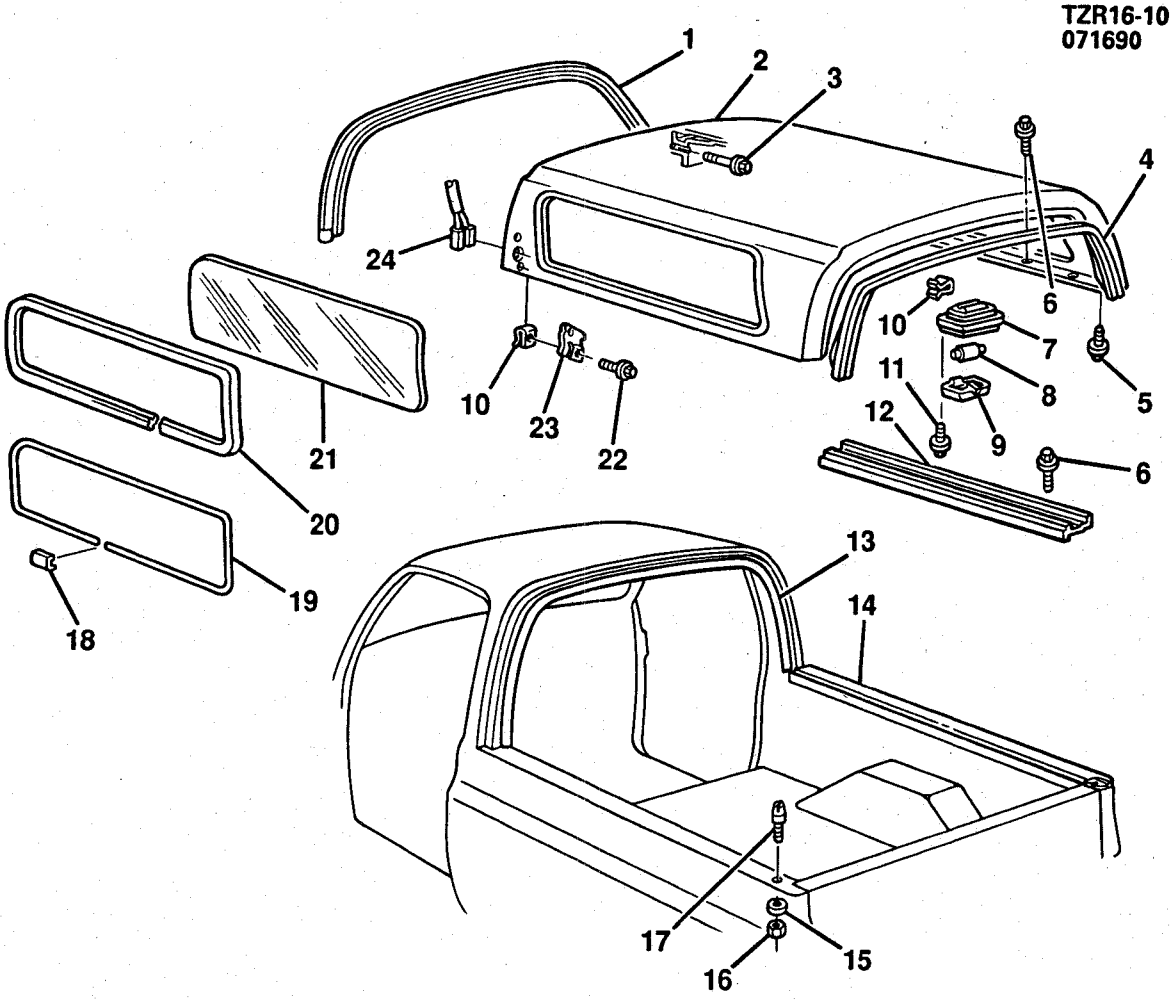

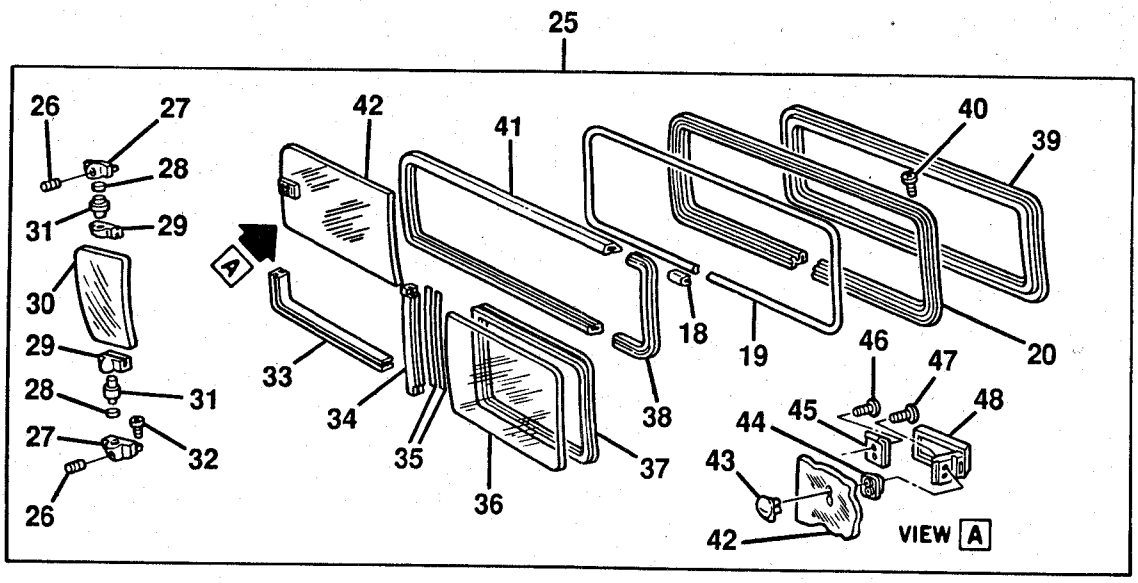

TZR16-10@

© 1990 GENERAL MOTORS SERVICE PARTS OPERATIONS—LIGHT TRUCK 52R

1985-1986 K(16) TOP/REMOVABLE
1987-1991 V(16) TOP/REMOVABLE

ILL NO.	GROUP	DESCRIPTION	USAGE	QTY	PART NUMBER	PER VEH	PRICE EACH	PRICE EXT
1.	16.585	**WEATHERSTRIP**, REM TOP FRT OTR			15590455			
2.	16.585	**TOP**, REMOVABLE (INCL #1,4,7,9, 14,24)(PAINT AS REQD)			15565342			
3.	16.585	**SCREW**, W/WASHER, REM TOP (1985-88)			358549			
	16.585	**SCREW**, REMOVABLE TOP			15609968			
4.	17.190	**WEATHERSTRIP**, REM TOP END GATE WDO GLS			358593			
5.	8.900	**BOLT**, HEX W/CON WA (3/8-16X1 3/8, 275M)(1985-88)						
	16.585	**SCREW**, REMOVABLE TOP			15609969			
6.	16.585	**SCREW**, REMOVABLE TOP (7.629) (1985-88)			327042			
	16.585	**SCREW**, REMOVABLE TOP			15609967			
7.	16.494	**HOUSING**, DOME LP (11.927)			6270493			
8.	8.991	**BULB**, (12CP ID 211-2)			9431808			
9.	16.495	**LENS**, DOME LP			336201			
10.	8.921	**NUT**, U SHAPE (M4.2X1.41X.065, ZOR)			52351724			
11.	8.977	**SCREW**, PAN HD C/REC TAP (M4.2X1.41X25)			11500056			
12.	16.742	**MOLDING**, RF SI LWR-LH			358535			
	16.742	**MOLDING**, RF SI LWR-RH			358536			
13.	16.585	**WEATHERSTRIP**, REM TOP (ON CAB)			357490			
14.	16.585	**WEATHERSTRIP**, REM TOP RF SI LWR-LH			358589			
	16.585	**WEATHERSTRIP**, REM TOP RF SI LWR-RH			358590			
15.	8.931	**WASHER**, SPR LK (5/16, PL)			9439511			
16.	8.915	**NUT**, HEX (5/16-18X.25, 286M POR)			9439493			
17.	16.585	**GUIDE**, AUX TOP LOC			340034			
18.	16.460	**CAP**, SI GLS W/STR MLDG (16.041)(PAINT AS REQD)			12338048			
19.	16.460	**MOLDING**, SI GLS W/STR (16.041) (BLACK)(CUT AS REQD)			466157			
	16.460	**MOLDING**, SI GLS W/STR (16.041) (BRIGHT)(CUT AS REQD) (1985-87)			464471			
20.	16.460	**WEATHERSTRIP**, SI GLS (EXC DEEP TINT STAT GLS)			475968			
	16.460	**WEATHERSTRIP**, SI GLS (W/DEEP TINT STAT GLS ONLY)			14031996			
21.	16.460	**GLASS**, BODY SI STAT-LH (TINTED)			14027473			
	16.460	**GLASS**, BODY SI STAT-RH (TINTED)			14027474			
	16.460	**GLASS**, BODY SI STAT-LH (DEEP TINT)			14027475			
	16.460	**GLASS**, BODY SI STAT-RH (DEEP TINT)			14027476			
22.	8.977	**SCREW**, HWH C/R (M4.3-1.41X20) CB			11503389			
23.	16.494	**PLATE**, DOME LP CONN (1985-88)			356252			
	16.495	**COVER**, REM TOP DM LP WRG ACC HOLE			15624196			
24.	16.495	**WIRE**, RF DOME LP			8913201			
25.	16.460	**WINDOW**, SI SLIDING-LH (TINTED) (INCL #26-48)			14027457			
	16.460	**WINDOW**, SI SLIDING-RH (TINTED) (INCL #26-48)			14027458			
	16.460	**WINDOW**, SI SLIDING-LH (DEEP TINT)(INCL #26-48)			14027459			
	16.460	**WINDOW**, SI SLIDING-RH (DEEP TINT)(INCL #26-48)			14027460			

© 1990 GENERAL MOTORS SERVICE PARTS OPERATIONS—LIGHT TRUCK 52R

CONTINUED

26.	N.S.	**SCREW**, SET (#10-32X1/4)					
27.	16.460	**PIVOT**, SI RR VENT (INCL #26,28)		14050603			
28.	N.S.	**BUSHING**, PIVOT PIN (PART OF #27)					
29.	N.S.	**BRACKET**, VENT GLS PIVOT (PART OF #32)					
30.	16.460	**WINDOW**, SI VENT-LH (INCL #30, 31)(*1)		14095669			
	16.460	**WINDOW**, SI VENT-RH (INCL #30, 31)(*1)		14095670			
31.	N.S.	**PIN**, PIVOT (PART OF #32)					
32.	8.977	**SCREW**, PAN HD C/REC (#6-32X5/16, PHOS)		9420723			
33.	16.460	**FILLER**, SI STAT WDO		14027631			
34.	16.460	**SASH**, SI STAT WDO-LH		14027623			
	16.460	**SASH**, SI STAT WDO-RH		14027624			
35.	16.460	**WEATHERSTRIP**, SASH		14027635			
36.	16.460	**GLASS**, SIDE STAT WINDOW-LH (TINTED)		14027621			
	16.460	**GLASS**, SIDE STAT WINDOW-RH (TINTED)		14027622			
	16.460	**GLASS**, STAT SECTION-LH (DEEP TINT)		14095589			
	16.460	**GLASS**, STAT SECTION-RH (DEEP TINT)		14095590			
37.	16.460	**WEATHERSTRIP**, STAT GLS		14027632			
38.	16.460	**STOP**, SI SLDG SEC		14027637			
39.	N.S.	**FRAME**, SLDG WDO (PART OF #25)					
40.	N.S.	**SCREW**, PAN HD C/REC (#6-32X1)(PART OF #25)					
41.	16.460	**WEATHERSTRIP**, SIDE SLDG WINDOW (TINTED)(*2)		14027636			
42.	16.460	**GLASS**, SIDE SLDG WINDOW-LH (TINTED)		14027625			
	16.460	**GLASS**, SIDE SLDG WINDOW-RH (TINTED)		14027626			
	16.460	**GLASS**, SLDG SECTION-LH (DEEP TINT)		14095667			
	16.460	**GLASS**, SLDG SECTION-RH (DEEP TINT)		14095668			
43.	N.S.	**CAP**, SLDG WDO LK (PART OF #47)					
44.	N.S.	**SPACER**, SLDG WDO LK (PART OF #47)					
45.	N.S.	**CATCH**, SLDG WDO LK (PART OF #47)					
46.	N.S.	**RIVET**, SLDG WDO					
47.	N.S.	**SCREW**, FL HD C/SINK C/R (#6-32X5/8)(PART OF #25)					
48.	16.460	**LATCH PKG**, SLDG WDO LK (W/TINT)(INCL #42-47)		14039191			
	16.460	**LATCH PKG**, SLDG WDO LK (W/DEEP TINT)(INCL #44-47)		14095594			

NOTE 1: VENT GLASS IS TINTED AND IS USED WITH BOTH TINTED AND DEEP TINTED SLIDING WINDOW ASSEMBLIES.

NOTE 2: WEATHERSTRIP IS PART OF SLIDING WINDOW ASSEMBLIES; ITEM #25,AND IS NOT SERVICED SEPARATE.

© 1990 GENERAL MOTORS SERVICE PARTS OPERATIONS—LIGHT TRUCK 52R

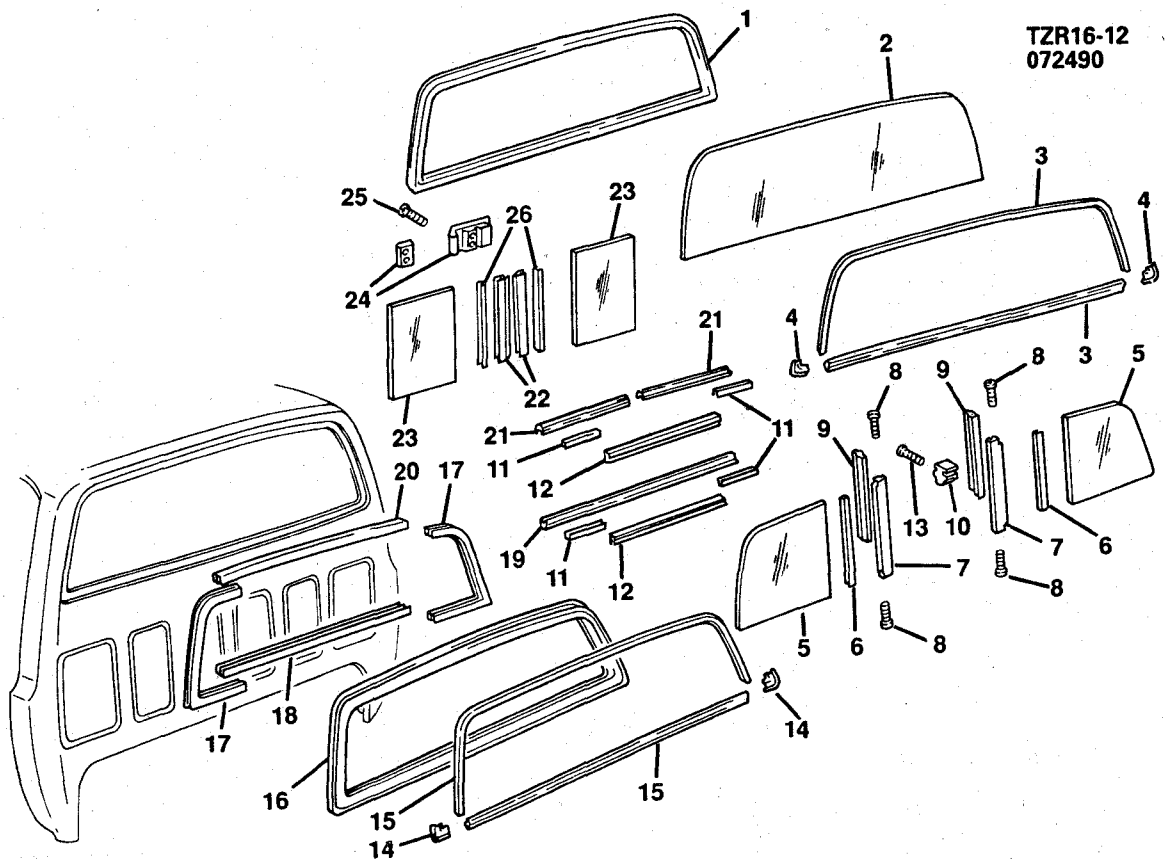

1985-1986 CK(03-43) WINDOWS (REAR)
1987-1991 RV(03-43) WINDOWS (REAR)

ILL NO.	GROUP	DESCRIPTION	USAGE	QTY	PART NUMBER	PER VEH	PRICE EACH	PRICE EXT
1.	16.470	**WEATHERSTRIP**, RR GLS (EXC SLIDING REAR WINDOW A28) (1985-91)			15590421			
	16.470	**WEATHERSTRIP**, RR GLS (W/RVL MLDG)(1985-87)			363110			
2.	16.464	**GLASS**, RR WDO (CLEAR)(EXC SLIDING REAR WINDOW A28)			363107			
	16.464	**GLASS**, RR WDO (TINTED)(EXC SLIDING REAR WINDOW A28)			363108			
3.	16.475	**MOLDING**, RR GLS W/S (179" CUT AS REQD)(16.041)			464471			
4.	16.475	**CAP**, RR GLS W/S (1985-86)			337837			
5.	16.464	**GLASS**, STAT GLS (W/A28)			15593334			
6.	16.470	**WEATHERSTR**, STAT GLS (W/A28)			15593320			
7.	16.460	**POST**, WDO GLS (INCL #9) (W/A28)			15593314			
8.	16.475	**SCREW**, CHAN TO POST (#6-20X3/4)(W/A28)			15593339			
9.	N.S.	**SEAL**, BULB STAT GLS (PART OF #12)						
10.	N.S.	**STOP**, CHAN GLS (PART OF #20)						
11.	16.470	**WEATHERSTRIP**, RR WDO STAT GLS (W/A28)			15593319			
12.	16.470	**FILLER**, GLS TRACK OTR (W/A28)			15593315			
13.	N.S.	**PIN**, GLS STOP (PART OF #20)						

© 1990 GENERAL MOTORS SERVICE PARTS OPERATIONS—LIGHT TRUCK 52R

14.	16.460	**CAP**, W/STRIP MLDG CORNER (W/A28)		15593316	___	___	___
15.	16.475	**MOLDING**, GLS W/STRIP (79" CUT AS REQD)(W/A28)		15589915	___	___	___
16.	16.470	**WEATHERSTRIP**, SLDG WDO ASM (W/A28)		15593323	___	___	___
17.	16.475	**CAP**, WDO SLDG END-LH (W/A28)		15593331	___	___	___
	16.475	**CAP**, WDO SLDG END-RH (W/A28)		15593332	___	___	___
18.	16.470	**CHANNEL**, WDO GLS LWR (INCL #21)(W/A28)		15593313	___	___	___
19.	N.S.	**FILLER**, GLS CHAN LWR (PART OF #18)			___	___	___
20.	16.470	**CHANNEL**, WDO GLS UPR (INCL #10,13)(W/A28)		15593312	___	___	___
21.	N.S.	**FILLER**, GLS CHAN UPR (PART OF #18)			___	___	___
22.	N.S.	**RAIL**, GLS (PART OF #23)			___	___	___
23.	16.464	**GLASS**, RR WDO SLDG-LH (W/A28)		15593327	___	___	___
	16.464	**GLASS**, RR WDO SLDG-RH (W/A28)		15593328	___	___	___
24.	16.460	**LATCH**, RR WDO GLS		15615506	___	___	___
25.	N.S.	**SCREW**, FL HD C/REC TAP (#4-40X3/8)			___	___	___
26.	N.S.	**FILLER**, GLS RAIL (PART OF #23)			___	___	___

RPO DEFINITIONS
A28 - WINDOW/REAR FULL WIDTH, SLIDING.

© 1990 GENERAL MOTORS SERVICE PARTS OPERATIONS—LIGHT TRUCK 52R

TZR16-11
070990

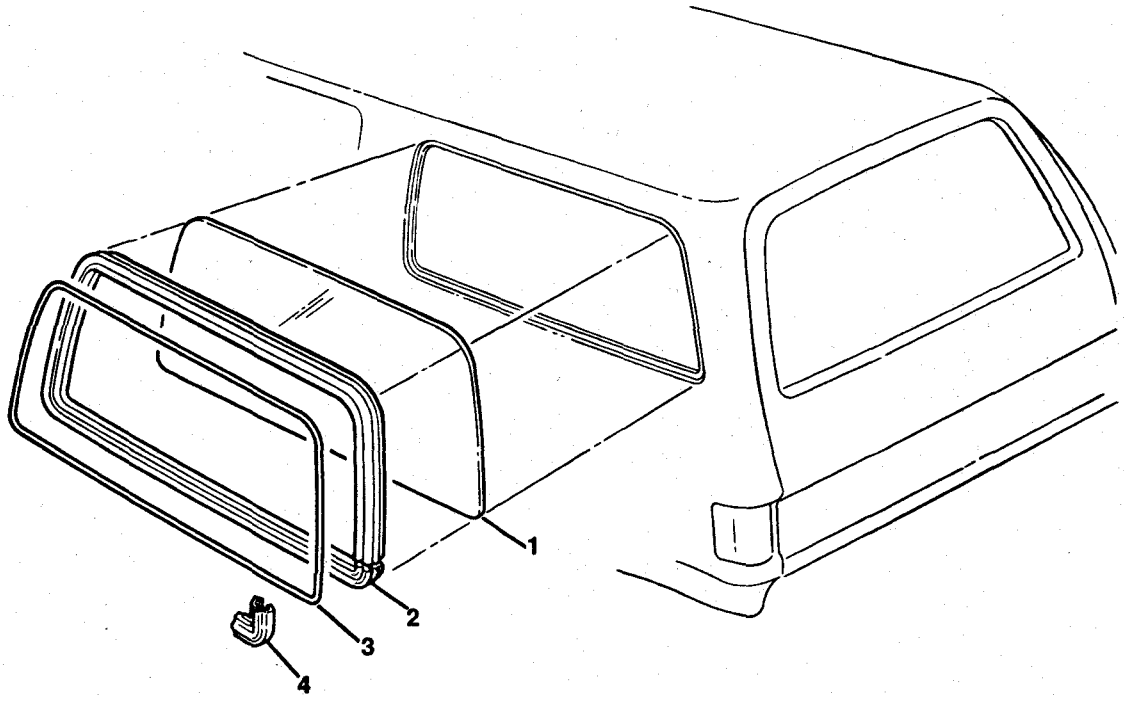

TZR16-11@

1988-1991 RV(06) WINDOWS

ILL NO.	GROUP	DESCRIPTION	USAGE	QTY	PART NUMBER	PER VEH	PRICE EACH	PRICE EXT
1.	16.460	**GLASS**, BODY SI WDO-LH (EXC DEEP TINT WINDOWS AJ1)			14022867			
	16.460	**GLASS**, BODY SI WDO-RH (EXC DEEP TINT WINDOWS AJ1)			14022868			
	16.460	**GLASS**, BODY SI WDO-LH (W/DEEP TINT WINDOWS AJ1)			14022869			
	16.460	**GLASS**, BODY SI WDO-RH (W/DEEP TINT WINDOWS AJ1)			14022870			
2.	16.460	**WEATHERSTRIP**, BODY SI WDO GLS (EXC TINT WINDOWS AJ1)			14022871			
	16.460	**WEATHERSTRIP**, BODY SI WDO GLS (W/DEEP TINT WINDOWS AJ1)			357409			
3.	16.041	**MOLDING**, BODY SI WDO REVEAL(CUT AS REQD)			466157			
4.	16.460	**CAP**, BODY SI WDO GLS W/STR MLDG			361524			

RPO DEFINITIONS
AA3 - WINDOW/DEEP TINT ALL EXC W/S, F/D & R/END.

© 1990 GENERAL MOTORS SERVICE PARTS OPERATIONS—LIGHT TRUCK 52R

RPO DEFINITIONS
AJ1 - WINDOW/DEEP TINT ALL EXC W/S & DOORS.

© 1990 GENERAL MOTORS SERVICE PARTS OPERATIONS—LIGHT TRUCK 52R

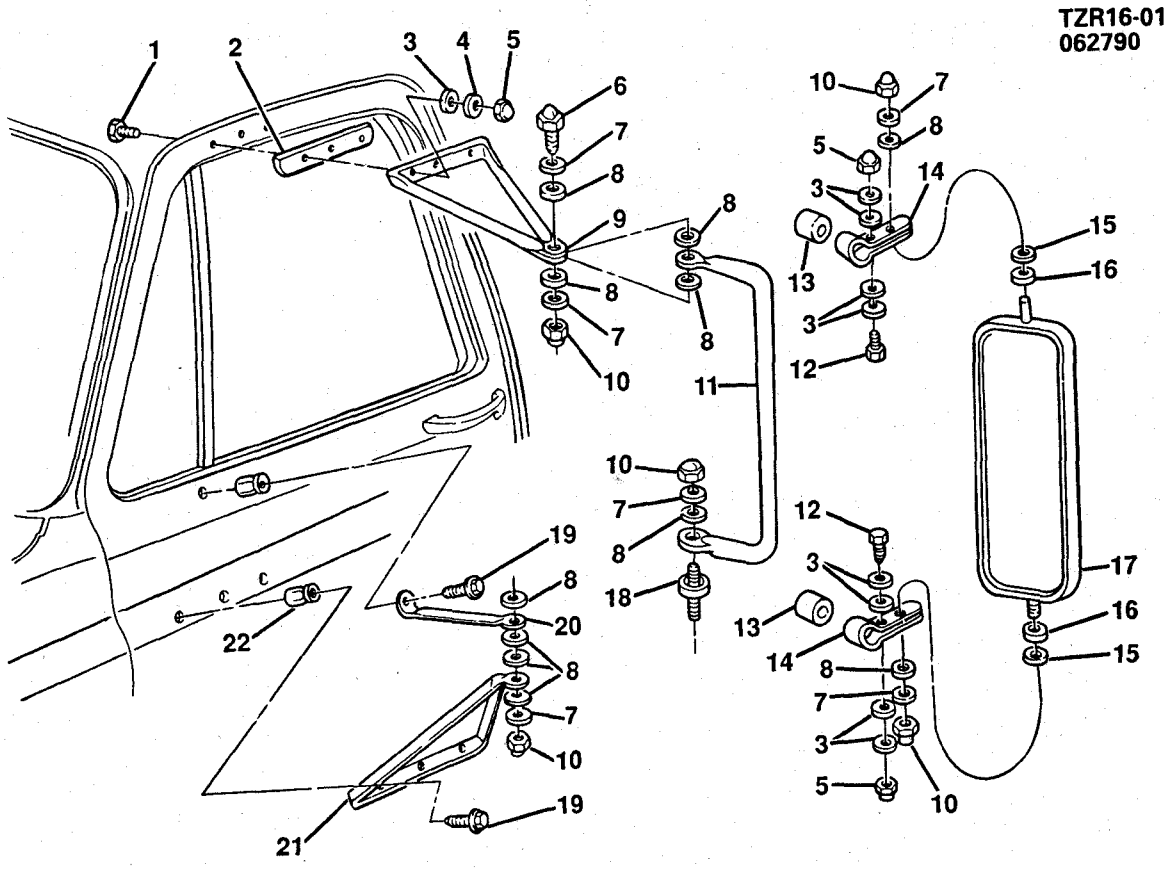

TZR16-01@

1985-1986 CK MIRROR/EXTERIOR (SENIOR WEST COAST DG5)
1987-1991 RV MIRROR/EXTERIOR (SENIOR WEST COAST DG5)

NOTE: QUANTITY IS ONE PER ASSSEMBLY UNLESS OTHERWISE SPECIFIED.

ILL NO.	GROUP	DESCRIPTION	USAGE	QTY	PART NUMBER	PER VEH	PRICE EACH	PRICE EXT
1.	16.069	**BOLT**, RR VIEW MIR SUPT UPR ..	.....		331531	___	___	___
2.	16.069	**GASKET**, MIR UPR ARM	.....		3896473	___	___	___
3.	16.069	**WASHER**, RR VIEW MIR (1.240) ..	.....		14016675	___	___	___
4.	16.069	**WASHER**, O/S RR VIEW MIR (1.240)	.....		14016675	___	___	___
5.	16.069	**NUT**, O/S RR VIEW MIR	.....		329121	___	___	___
6.	16.069	**BOLT**, RR VIEW MIR & SUPT	.....		14016678	___	___	___
7.	8.929	**WASHER**, SPL PL (.44 ID STAINLESS STEEL)	.....		331544	___	___	___
8.	16.069	**WASHER**, RR VIEW MIR SUPT ...	.....		14001718	___	___	___
9.	16.069	**ARM**, MIR SUPT UPR-LH	.....		14016691	___	___	___
	16.069	**ARM**, MIR SUPT UPR-RH	.....		14016692	___	___	___
10.	16.069	**NUT**, MIR SUPT (3/8-16)(CROWN)	.....		14016677	___	___	___

© 1990 GENERAL MOTORS SERVICE PARTS OPERATIONS—LIGHT TRUCK 52R

CONTINUED

11.	16.069	**SUPPORT**, MIR		14016684	____	____	____
12.	16.069	**BOLT**, RR VIEW MIR BRKT		14016674	____	____	____
13.	16.069	**GASKET**, RR VIEW MIR BRKT		3768865	____	____	____
14.	16.069	**BRACKET**, MIR		14016685	____	____	____
15.	4.233	**WASHER**, MIR (27/64X7/8)(STEEL FRICTION)(*1)		8642107	____	____	____
16.	8.929	**WASHER**, SPL PL (.44)		331544	____	____	____
	16.069	**SPACER**, SUPT (USE WITH BRACKET MIRROR NOT SHOWN)		369504	____	____	____
17.	16.068	**MIRROR** (SHOWN)		14016682	____	____	____
	N.S.	**MIRROR** (WITH BRACKET ATTACHMENT)			____	____	____
18.	16.069	**PIVOT**, MIR		14021236	____	____	____
19.	16.069	**BOLT**, O/S REAR VIEW MIR		14007511	____	____	____
20.	16.069	**BRACE**, MIR SUPT		14016693	____	____	____
21.	16.069	**ARM**, MIR SUPT LWR		14016686	____	____	____
22.	16.069	**NUT**, O/S RR VIEW MIR (1985-88) (AS REQD)		367292	____	____	____
	16.069	**NUT**, O/S RR VIEW MIR(1989-91) (2 REQD)		15551300	____	____	____

NOTE 1: REQUIRED ONLY WITH MIRROR AS SHOWN. NOT REQUIRED WITH BRACKET STYLE MIRROR.

© 1990 GENERAL MOTORS SERVICE PARTS OPERATIONS—LIGHT TRUCK 52R

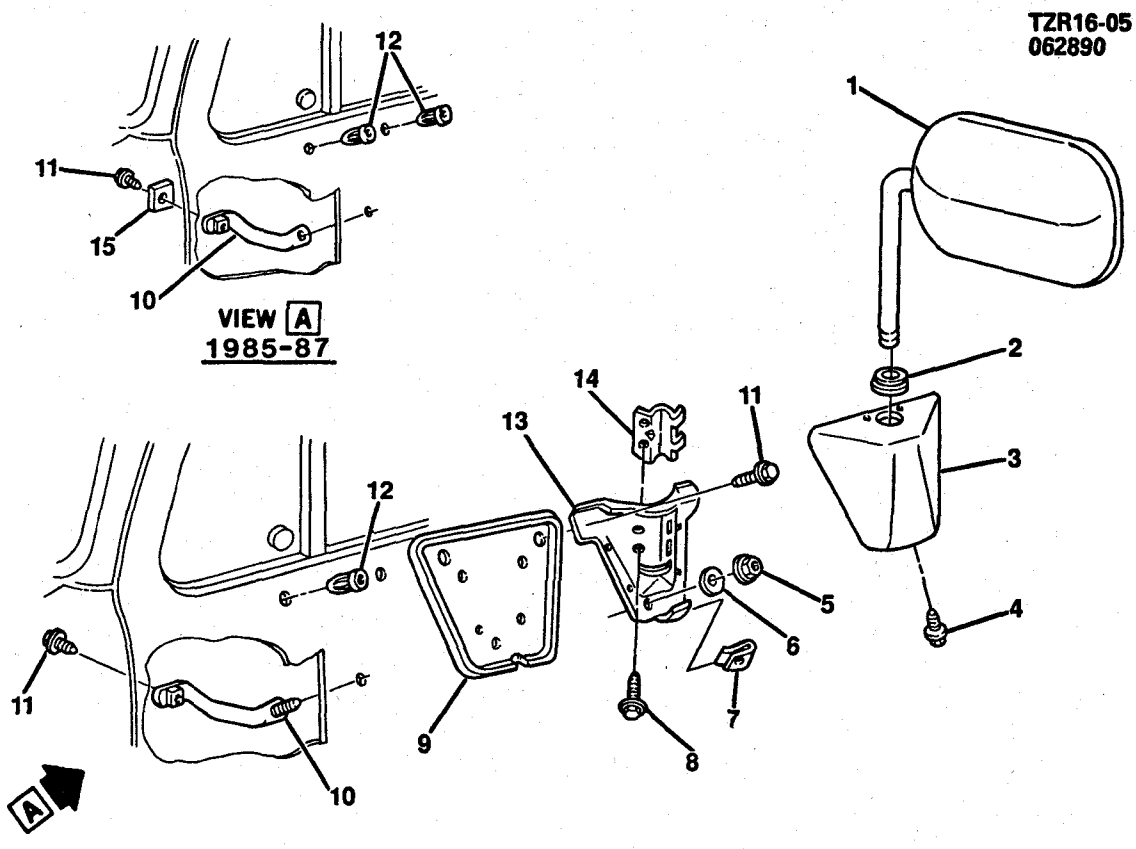

TZR16-05@

1985-1986 CK MIRROR/EXTERIOR (W/D44,D45)
1987-1991 RV MIRROR/EXTERIOR (W/D44,D45)

ILL NO.	GROUP	DESCRIPTION	USAGE	QTY	PART NUMBER	PER VEH	PRICE EACH	PRICE EXT
1.	16.068	**MIRROR PKG**, HEAD ONLY (PAINTED D44)			996222			
	16.068	**MIRROR PKG**, HEAD ONLY (STAINLESS D45)			996225			
2.	16.069	**GROMMET**, MIR ARM			14007435			
3.	16.069	**COVER**, MIR BRKT-LH (PAINTED D44)			15607935			
	16.069	**COVER**, MIR BRKT-RH (PAINTED D44)			15607936			
	16.069	**COVER**, MIR BRKT-LH (STAINLESS D45)			14007431			
	16.069	**COVER**, MIR BRKT-RH (STAINLESS D45)			14007432			
4.	8.977	**SCREW**, RD WA HD (M4.2X1.41X13)			14007440			
5.	16.069	**NUT**, O/S RR VIEW MIR (VINYL CTD)			367292			
6.	16.069	**WASHER**, RR VIEW MIR (1.240)			14016675			
7.	8.921	**NUT**, SPRING (#8-18)			52351724			
8.	8.977	**SCREW**, HEX WA HD (1/4-14X3/4)						
9.	16.069	**GASKET**, MIR BRKT			14008191			
10.	16.069	**REINFORCEMENT**, MIR BRKT-LH (1985-87)			14007541			
	16.069	**REINFORCEMENT**, MIR BRKT-LH			15628627			
	16.069	**REINFORCEMENT**, MIR BRKT-RH (1985-87)			14007542			
	16.069	**REINFORCEMTNT**, MIR BRKT-RH			15628628			

© 1990 GENERAL MOTORS SERVICE PARTS OPERATIONS—LIGHT TRUCK 52R

CONTINUED

11.	16.069	**BOLT**, O/S REAR VIEW MIRROR	.....	**14007511**	____	____	____
12.	16.069	**NUT**, MIR BRKT	.....	**367292**	____	____	____
13.	16.069	**BRACKET**, MIR	.....	**14007429**	____	____	____
14.	16.069	**CLAMP**, MIR	.....	**14007430**	____	____	____
15.	16.069	**SPACER**, MIR REINF (1985-87)	.....	**14007539**	____	____	____

© 1990 GENERAL MOTORS SERVICE PARTS OPERATIONS—LIGHT TRUCK 52R

TZR16-06
062890

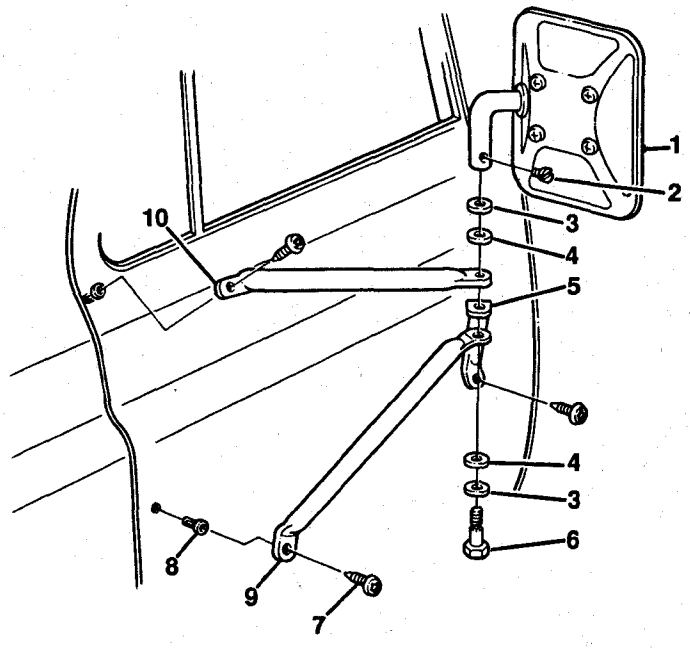

TZR16-06@

1985-1986 CK MIRROR/EXTERIOR (W/DF2 CAMPER)
1987-1991 RV MIRROR/EXTERIOR (W/DF2 CAMPER)
1987-1991 RV MIRROR/EXTERIOR (W/DF2 CAMPER)

ILL NO.	GROUP	DESCRIPTION	USAGE	QTY	PART NUMBER	PER VEH	PRICE EACH	PRICE EXT
1.	21.408	**MIRROR ASM**, RR VIEW (STAINLESS)(INCL #2)			998906			
2.	8.975	**SCREW**, SLOTTED SET CUP POINT (#10-24)(PART OF #1)						
3.	16.069	**WASHER**, SPL PL (.44 ID, SST)			331544			
4.	16.069	**WASHER**, RR VIEW MIR SUPT (NYLON)			14001718			
5.	16.069	**BRACE**, RR VIEW MIR LWR RR-LH			15593419			
	16.069	**BRACE**, RR VIEW MIR LWR RR-RH			15593420			
6.	16.069	**BOLT**, RR VIEW MIR & SUPT			14028311			
7.	16.069	**SCREW**, PAN HD TORX MA W/NYLON WA (1/4-20X.88)			15593546			
8.	16.069	**NUT**, O/S RR VIEW MIR			367292			
9.	16.069	**BRACE**, RR VIEW MIR LWR FRT-LH			15593417			
	16.069	**BRACE**, RR VIEW MIR LWR FRT-RH			15593418			
10.	16.069	**BRACE**, RR VIEW MIR UPR-LH			15593415			
	16.069	**BRACE**, RR VIEW MIR UPR-RH			15593416			

© 1990 GENERAL MOTORS SERVICE PARTS OPERATIONS—LIGHT TRUCK 52R

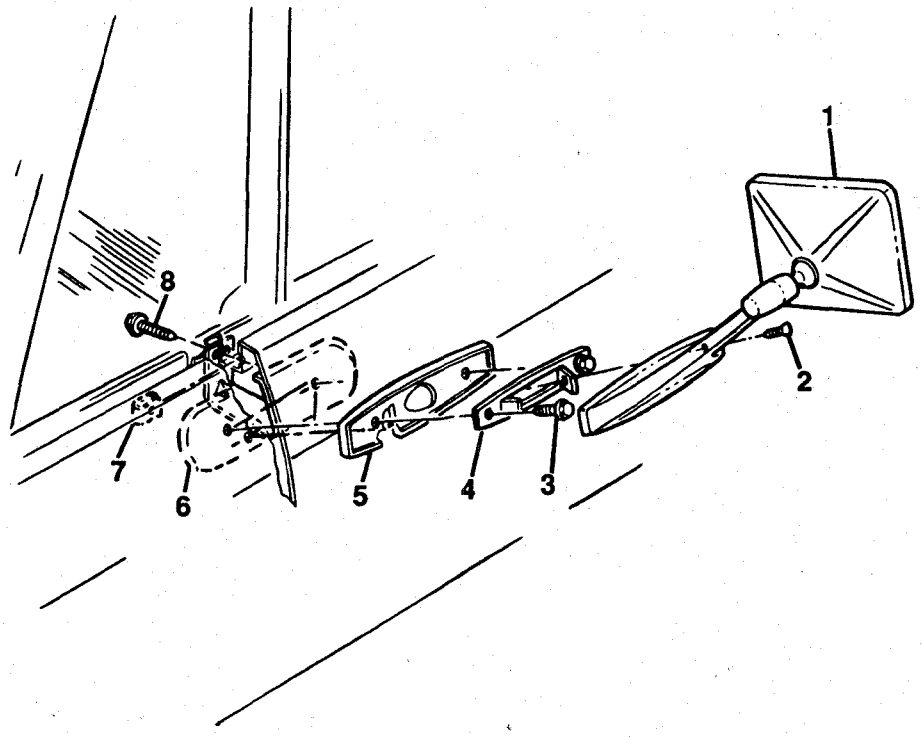

TZR16-07@

1985-1986 CK MIRROR/EXTERIOR (STANDARD)
1987 RV MIRROR/EXTERIOR (STANDARD)

ILL NO.	GROUP	DESCRIPTION	USAGE	QTY	PART NUMBER	PER VEH	PRICE EACH	PRICE EXT
1.	16.068	**MIRROR ASM**			326174			
2.	8.977	**SCREW**, OV HD TORX TAP (#10-24X1)			14016551			
3.	8.900	**SCREW**, HWH TAP (#10-16X3/4) (9.211)			3036894			
4.	16.069	**RETAINER**, O/S MIRROR			9826886			
5.	16.069	**GASKET**, O/S RR VIEW MIRROR (10.186)			9829666			
6.	16.069	**REINFORCEMENT**, RR VIEW MIRROR			326173			
7.	8.921	**NUT**, U SPRING (#10-16X11/32)						
8.	16.069	**BOLT**, SIDE F/D (#10-16X9/16)			335551			

© 1990 GENERAL MOTORS SERVICE PARTS OPERATIONS—LIGHT TRUCK 52R

NOTES

BLANK PAGE

TZR16-04
070290

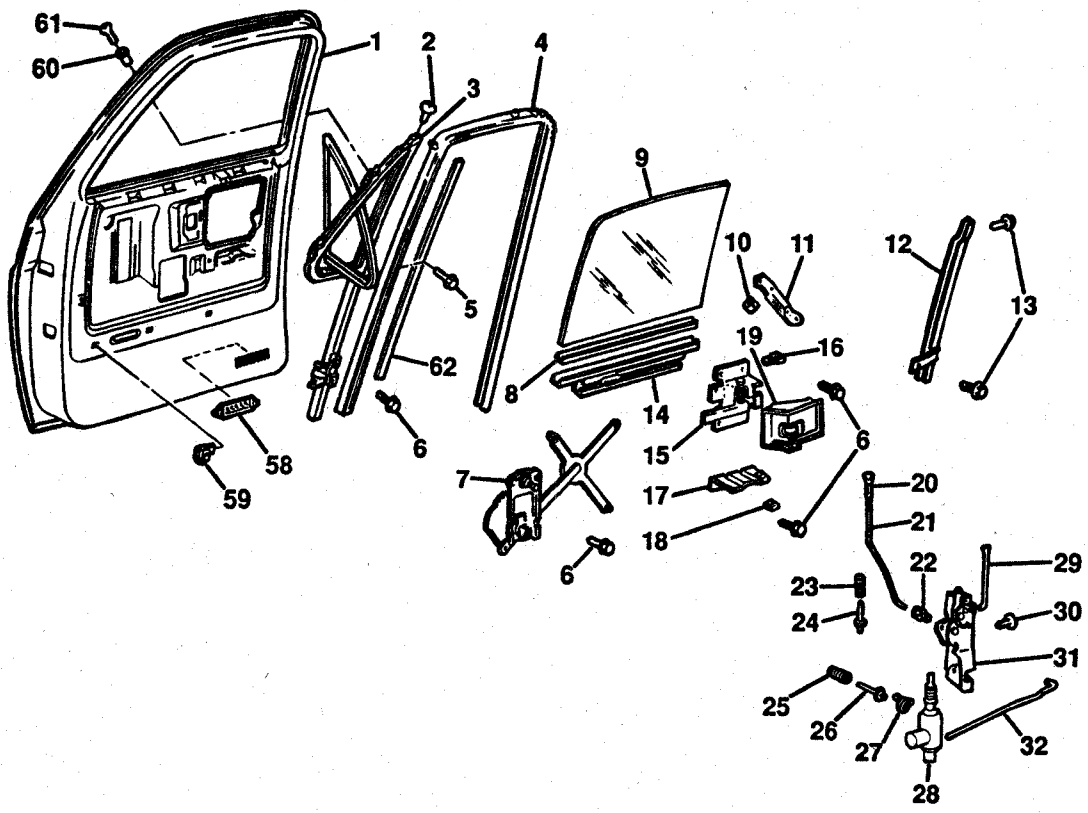

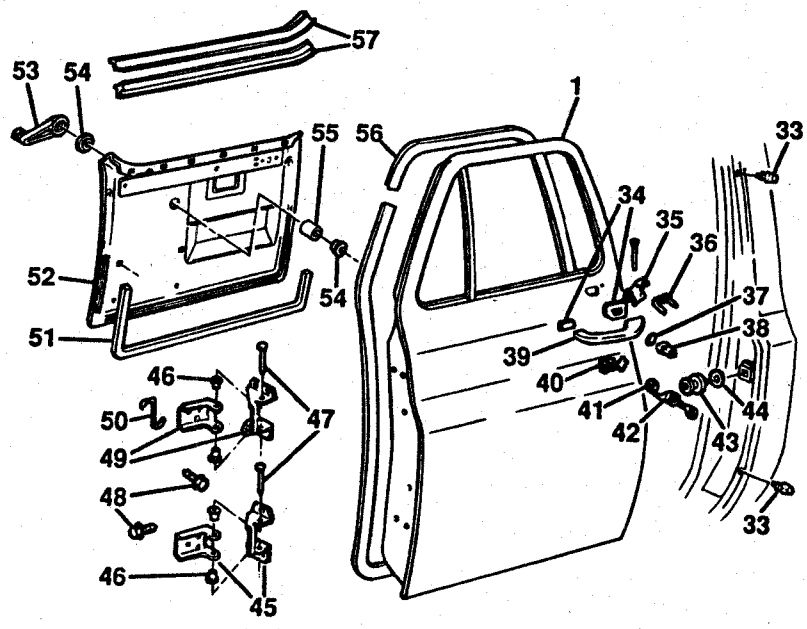

TZR16-04@

1987-1991 RV DOOR HARDWARE/SIDE FRONT

NOTE: QUANTITY IS ONE PER ASSEMBLY UNLESS OTHERWISE SPECIFIED.

ILL NO.	GROUP	DESCRIPTION	USAGE	QTY	PART NUMBER	PER VEH	PRICE EACH	PRICE EXT
1.	16.150	**DOOR**, FRT SI-LH			15614497			
	16.150	**DOOR**, FRT SI-RH			15614498			
	16.152	**PANEL**, SI F/D OTR-LH			15598783			
	16.152	**PANEL**, SI F/D OTR-RH			15598784			
2.	16.173	**SCREW**, VENT WDO (1985-88)(*1)			15590443			
	8.977	**SCREW**, HWH TAP (M4.2X1.41X16, PZOR)(AS REQD)			11509135			
	8.054	**WASHER**, SPL SEALING FRT S/D VENT WDO (2 REQD)			3755760			
3.	16.173	**VENTILATOR**, SI F/D-LH (LESS GLASS)(1985-89)(*1)			20307715			
	16.173	**VENTILATOR**, SI F/D-RH (LESS GLASS)(1985-89)(*1)			20307716			
	16.173	**WINDOW**, FRT S/D VENT(-LH CLEAR GLASS, WITHOUT HANDLE) RV(*1)			15634471			
	16.173	**WINDOW**, FRT S/D VENT(-RH CLEAR GLASS, WITHOUT HANDLE) RV(*1)			15634472			
	16.173	**WINDOW**, FRT S/D VENT(-LH TINTED GLASS, WITHOUT HANDLE)RV(*1)			15634473			
	16.173	**WINDOW**, FRT S/D VENT(-RH TINTED GLASS, WITHOUT HANDLE)RV(*1)			15634474			
4.	16.190	**RUN**, WDO GLS-LH(*1)			14027777			
	16.190	**RUN**, WDO GLS-RH(*1)			14027778			
5.	16.069	**BOLT**, VENT WDO (4 REQD)			335551			
6.	8.900	**BOLT**, HEX W/CON SPR WA (1/4-20X1/2, 275M)(AS REQD)						
7.	16.260	**REGULATOR**, WDO-LH (EXC A31)			14027431			
	16.260	**REGULATOR**, WDO-RH (EXC A31)			14027432			
	16.260	**REGULATOR**, ELEC WDO F/D-LH			22030648			
	16.260	**REGULATOR**, ELEC WDO F/D-RH			22030647			
	16.263	**MOTOR**, WDO REG ELEC (2 REQD)			22062528			
8.	16.190	**FILLER**, GLASS CHANNEL			370389			
9.	16.180	**GLASS**, FRT S/D-LH (CLEAR)(03-43)			14022841			
	16.180	**GLASS**, FRT S/D-RH (CLEAR)(03-43)			14022842			
	16.180	**GLASS**, FRT S/D-LH (TINT)			14022843			
	16.180	**GLASS**, FRT S/D-RH (TINT)			14022844			
10.	1.269	**NUT**, FRT S/D PULL STRP (2 REQD)			1494257			
11.	16.450	**BRACKET**, FRT S/D PULL STRP			458095			
	16.450	**BRACKET**, FRT S/D PULL STRP			458096			
12.	16.190	**CHANNEL**, FRT S/D WDO-LH			337715			
	16.190	**CHANNEL**, FRT S/D WDO-RH			337716			
13.	8.900	**BOLT**, HEX W/CON WA (1/4-20X.50, 275M PZOR)(AS REQD)						
14.	16.190	**SASH**, WDO-LH			15590401			
	16.190	**SASH**, WDO-RH			15590402			
15.	16.341	**CONTROL**, LK-LH (INCL #16)			15597653			
	16.341	**CONTROL**, LK-RH (INCL #16)			15597654			
16.	16.341	**CLIP**, LK REM CONT ROD			375180			
17.	16.155	**BRACKET**, A/RST-LH			362433			
	16.155	**BRACKET**, A/RST-RH			362434			
18.	8.921	**NUT**, U-SHAPE (#10-12)						
19.	16.341	**SEAL**, LK REM CONT-LH			14026383			
	16.341	**SEAL**, LK REM CONT-RH			14026384			
20.	16.157	**KNOB**, LK REM ROD (BLACK)			7591126			
21.	16.341	**ROD**, LK-LH (MANUAL)			14039767			
	16.341	**ROD**, LK-RH (MANUAL)			14039768			
	16.341	**ROD**, LK-LH (POWER)			458053			
	16.341	**ROD**, LK-RH (POWER)			458054			

© 1990 GENERAL MOTORS SERVICE PARTS OPERATIONS—LIGHT TRUCK 52R

CONTINUED

22.	16.341	**CLIP**, REM LK ROD (PART OF #31) (17.198)		15545178			
23.	16.335	**SPRING**, LK DETENT LVR (PART OF #31)		9827948			
24.	16.335	**PIN**, LK DETENT LVR (PART OF #31)		9827947			
25.	16.335	**SPRING**, LK O/S REL LVR (PART OF #31)		9827950			
26.	16.345	**PIN**, LK O/S REL LVR SPR (PART OF #31)		9827961			
27.	16.335	**SPRING**, LK LVR-LH (PART OF #31)		9886515			
	16.335	**SPRING**, LK LVR-RH (PART OF #31)		9886514			
28.	16.263	**ACTUATOR**, PWR LK (INC BRKT)		22020256			
	16.263	**BRACKET**, PWR DR LK ACTR-LH		22049755			
	16.263	**BRACKET**, PWR DR LK ACTR-RH		22049756			
29.	16.341	**ROD**, LK O/S HDL		327067			
30.	8.908	**SCREW**, FL SERR HD C/R MA (1/4-20X5/8, PEOR)		9439772			
31.	16.330	**LOCK**, SI F/D-LH (INCL #22 THRU 27)		14039763			
	16.330	**LOCK**, SI F/D-RH (INCLS #22 THRU 27)		14039764			
32.	16.341	**ROD**, LK REM CONT-LH		14039765			
	16.341	**ROD**, LK REM CONT-RH		14039766			
33.	16.400	**BUMPER**, DOOR		3900684			
34.	16.353	**GASKET**, S/D O/S HDL-LH (PART OF #39)		6258561			
	16.353	**GASKET**, S/D O/S HDL-RH (PART OF #39)		6258562			
35.	16.353	**LEVER**, LK O/S REL-LH (PART OF #39)		327063			
	16.353	**LEVER**, LK O/S REL-RH (PART OF #39)		327064			
36.	16.353	**SPRING**, LK O/S REL LVR (PART OF #39)		327065			
37.	16.353	**SEAL**, SI DR LK O/S HDL PUSH BUTN (PART OF #39)(AS REQD)		6255780			
38.	16.353	**BUTTON**, O/S HDL PUSH (PART OF #39)		327062			
39.	16.350	**HANDLE**, LK O/S-LH (INCL #34 THRU 38)		6272581			
	16.350	**HANDLE**, LK O/S-RH (INCL #34 THRU 38)		6272582			
40.	16.353	**RETAINER**, LK CYL (AS REQD)		9728247			
41.	16.328	**GASKET**, S/D LK CYL (2 REQD)		15646921			
42.	16.330	**LOCK**, S/D-LH (W/NYLON ROD RET CLIPS)					
	16.330	**LOCK**, S/D-RH (W/NYLON ROD RET CLIPS)					
43.	16.335	**STRIKER**, LK (AS REQD)		9601750			
44.	8.929	**WASHER**, FL (M13X45X1.5, PHOS)(AS REQD)					
45.	16.320	**HINGE**, LWR-LH (INCL #46,47)		14000091			
	16.320	**HINGE**, LWR-RH (INCL #46,47)		14000092			
46.	16.323	**BUSHING**, DR HGE (PART OF #45)		9721917			
47.	16.323	**PIN**, DR HINGE BUSH (PART OF #45)		6271989			
48.	8.016	**BOLT**, HEX W/CON WA (3/8-16X1 1/8, POR)(AS REQD)					
49.	16.320	**HINGE**, UPR-LH (INCL #46,47,50)		14000093			
	16.320	**HINGE**, UPR-RH (INCL #46,47,50)		14000094			
50.	16.320	**ROD**, UPR HGE TORQUE-LH		327959			
	16.320	**ROD**, UPR HGE TORQUE-RH		327960			
51.	16.165	**SEAL**, FOAM (46.5X.36X.5)(9.262)		363139			
52.	16.165	**PANEL**, TR (CHARCOAL)(*2)					
53.	16.270	**HANDLE**, WDO REG (EXC A31)(2 REQD)		14030586			
54.	16.270	**PLATE**, WDO REG HDL BRG (BLACK)(EXC A31)(AS REQD)		14010954			
55.	16.270	**SPACER**, WDO REG HDL (EXC A31)(*3)		364372			

© 1990 GENERAL MOTORS SERVICE PARTS OPERATIONS—LIGHT TRUCK 52R

CONTINUED

56.	16.225	**WEATHERSTRIP**, FRT S/D (ON BODY) (2 REQD)		15522764	___	___	___
57.	16.183	**WEATHERSTRIP**, WDO INR-LH		15569071	___	___	___
	16.183	**WEATHERSTRIP**, WDO INR-RH		15569072	___	___	___
	16.183	**SEAL**, WDO OTR-LH		14027775	___	___	___
	16.183	**SEAL**, WDO OTR-RH		14027776	___	___	___
58.	16.520	**VALVE**, PRESSURE RELIEF DOOR (2 REQD)		461610	___	___	___
59.	16.165	**RETAINER**, TR PNL (NUT TYPE)(6 REQD)		15590422	___	___	___
60.	16.176	**BUSHING**, VENT WDO (4 REQD)		14013789	___	___	___
61.	8.977	**SCREW**, OV HD TORQ (M4.2X1.41X20, CHROME BRIGHT)			___	___	___
62.	16.183	**WEATHERSTRIP**, FRT S/D WDO INR-LH		15569071	___	___	___
	16.183	**WEATHERSTRIP**, FRT S/D WDO INR-RH		15569072	___	___	___

NOTE 1: THE VENT WINDOW IS SERVICED AS AN ASSEMBLY STARTING IN 1989.
NOTE 2: SEE GROUP 16.165 FOR ADDITIONAL COLORS.
NOTE 3: CUT AS REQD.

RPO DEFINITIONS
A31-WINDOW ELEC CONTROL.

© 1990 GENERAL MOTORS SERVICE PARTS OPERATIONS—LIGHT TRUCK 52R

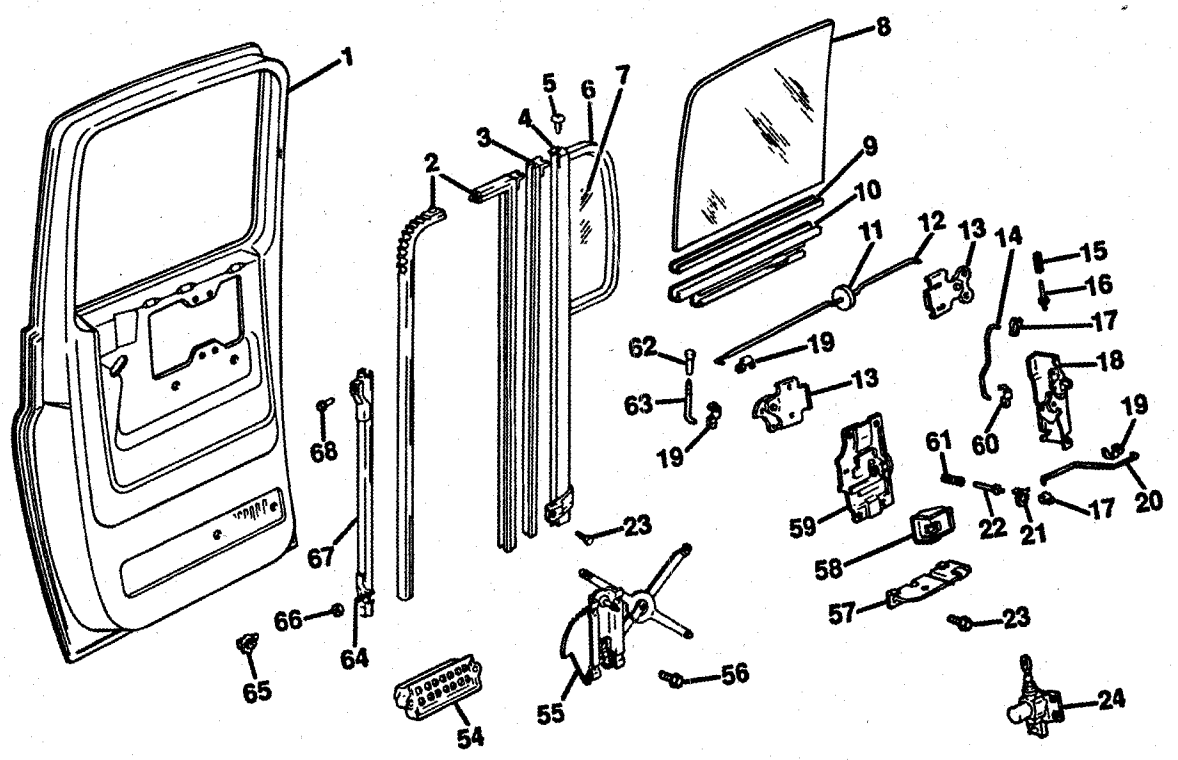

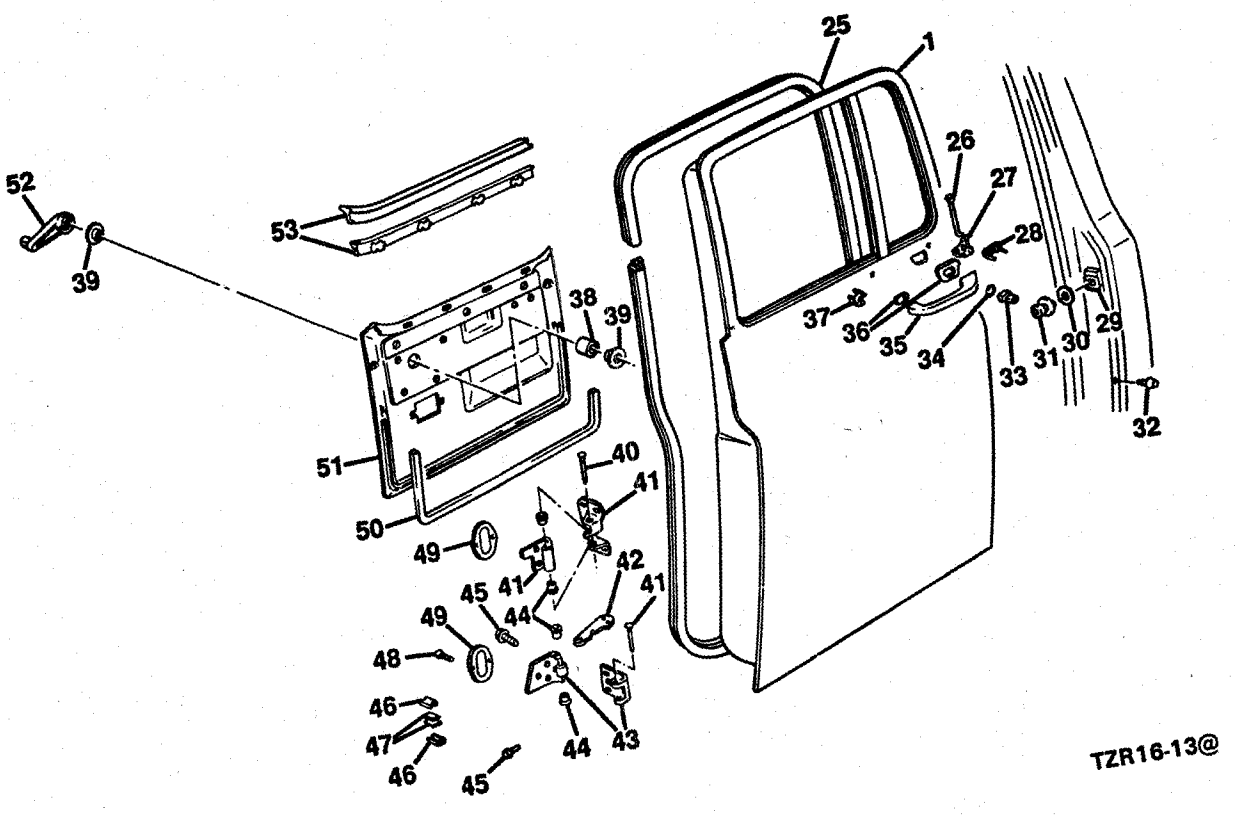

© 1990 GENERAL MOTORS SERVICE PARTS OPERATIONS—LIGHT TRUCK 52R

1985-1986 CK(06-43) DOOR HARDWARE/SIDE REAR
1987-1991 RV(06-43) DOOR HARDWARE/SIDE REAR

ILL NO.	GROUP	DESCRIPTION	USAGE	QTY	PART NUMBER	PER VEH	PRICE EACH	PRICE EXT
1.	16.150	**DOOR** ,RR SI(-LH (1985-88))			15531563			
	16.150	**DOOR** ,RR SI(-LH (1989-91))			15641847			
	16.150	**DOOR** ,RR SI(-RH (1985-88))			15531564			
	16.150	**DOOR** ,RR SI(-RH (1989-91))			15628658			
2.	16.190	**RUN** , WDO (EXC DEEP TNTD GLS)			14027787			
	16.190	**RUN** , RR S/D WDO (W/DEEP TNTD GLS)(06)			339902			
3.	16.183	**WEATHERSTRIP** , RR S/D WDO (W/DEEP TNTD GLS)(06)			14004784			
4.	16.190	**CHANNEL** , WDO RR GDE-LH			15606509			
	16.190	**CHANNEL** , WDO RR GDE-RH			15606510			
5.	8.977	**SCREW** , C/R TAP (M4.2X1.41X13)						
	8.800	**SEALANT** , SILICONE RTV						
6.	16.183	**WEATHERSTRIP** , STA WDO			15646933			
7.	16.180	**GLASS** , STA-LH (CLEAR)(43)			6274449			
	16.180	**GLASS** , STA-RH (CLEAR)(43)			6274450			
	16.180	**GLASS** , STA-LH (TINT)			6274453			
	16.180	**GLASS** , STA-RH (TINT)			6274454			
	16.180	**GLASS** , STA-LH (DEEP TINT)(06)			14027469			
	16.180	**GLASS** , STA-RH (DEEP TINT)(06)			14027470			
8.	16.180	**GLASS** , RR S/D-LH (CLEAR)(43)			14027461			
	16.180	**GLASS** , RR S/D-RH (CLEAR)(43)			14027462			
	16.180	**GLASS** , RR S/D-LH (TINT)			14027463			
	16.180	**GLASS** , RR S/D-RH (TINT)			14027464			
	16.180	**GLASS** , RR S/D-LH (DEEP TINT) (06)			14027465			
	16.180	**GLASS** , RR S/D-RH (DEEP TINT) (06)			14027466			
9.	16.190	**FILLER** , GLASS CHANNEL(CUT AS REQD)						
10.	16.190	**SASH** , WDO (EXC DEEP TNTD GLS)			14027467			
	16.190	**SASH** , WDO (W/DEEP TNTD GLS) (06)			351731			
11.	16.157	**INSULATOR** , LK ROD			14007449			
12.	16.157	**ROD** , REM LK CTR-LH			14039771			
	16.157	**ROD** , REM LK CTR-RH			14039772			
13.	16.345	**LEVER** , REM LK			14039775			
14.	16.157	**ROD** , LK LWR-LH (MANUAL)			14039773			
	16.157	**ROD** , LK LWR-RH (MANUAL)			14039774			
	16.341	**ROD** , REM LK-LH (POWER)			14003037			
	16.341	**ROD** , REM LK-RH (POWER)			14003038			
15.	16.335	**SPRING** , LK DETENT LVR			9827948			
16.	16.335	**PIN** , LK DETENT LVR			9827947			
17.	16.341	**CLIP** , REM CONT ROD			375180			
18.	16.330	**LOCK** , SI R/D-LH (INCL #14,15,20, 21,22)			14039763			
	16.330	**LOCK** , SI R/D-RH (INCL #14,15,20, 21,22)			14039764			
19.	16.341	**CLIP** , REM LK ROD (17.198)			15545178			
20.	16.341	**ROD** , LK REM CONT-LH			14039769			
	16.341	**ROD** , LK REM CONT-RH			14039770			
21.	16.335	**SPRING** , LOCKING LVR-LH(1985-88)			9886515			
	16.335	**SPRING** , LOCKING LVR-RH(1985-88)			9886514			
22.	16.345	**PIN** , LK O/S REL LVR SPR			9827961			
23.	8.900	**BOLT** , LG HEX HD MA (1/4-20X1/2)						
24.	16.263	**ACTUATOR** , PWR LK (10.485)			22020256			
	16.263	**BRACKET** , LK ACTUATOR-LH			22049757			
	16.263	**BRACKET** , LK ACTUATOR-RH			22049758			
25.	16.225	**WEATHERSTRIP** , RR S/D (06)			15606409			
	16.225	**WEATHERSTRIP** , RR S/D (43)			15606344			
26.	16.341	**ROD** , LK O/S HDL			327067			
27.	16.353	**LEVER** , O/S REL-LH			327063			

© 1990 GENERAL MOTORS SERVICE PARTS OPERATIONS—LIGHT TRUCK 52R

CONTINUED

27.	16.353	LEVER, O/S REL-RH		327064			
28.	16.353	SPRING, O/S REL LVR		327065			
29.	16.335	PLATE, STKR TAP		6272627			
30.	8.929	WASHER, FL (M13X45X1.5)					
31.	16.335	STRIKER, LK (10.569)		9601750			
32.	16.400	BUMPER, DR		3900684			
33.	16.353	BUTTON, O/S HDL PUSH		327062			
34.	16.353	SEAL, SI R/D LK O/S HDL PUSH BUTN		15593878			
35.	16.350	HANDLE, O/S-LH (INCL #32,33, 37,38,40,41)		6272581			
	16.350	HANDLE, O/S-RH (INCL #32,33, 37,38,40,41)		6272582			
36.	16.353	GASKET KIT, O/S HDL-LH		6258561			
	16.353	GASKET KIT, O/S HDL-RH		6258562			
37.	16.353	CLIP, O/S HDL ROD		331616			
38.	16.270	SPACER, WDO REG HDL		364372			
39.	16.270	PLATE, WDO REG HDL BRG		14010954			
40.	16.323	PIN, DR HINGE BUSH (10.466)		6271989			
41.	16.320	HINGE, UPR-LH (INCL #42,45)		14001303			
	16.320	HINGE, UPR-RH (INCL #42,45)		14001304			
42.	16.437	ARM, SI DR CHK		3934499			
43.	16.320	HINGE, LWR-LH (INCL #42,43,45, 47,48)		14001301			
	16.320	HINGE, LWR-RH (INCL #42,43,45, 47,48)		14001302			
44.	16.323	BUSHING, DR HGE (17.208)		335524			
45.	8.977	SCREW, TAP (3/8-16X1 1/8)					
	8.931	WASHER, SPR LK (3/8X11/16, ZOR)					
46.	16.437	RETAINER, FRICTION PAD		3891811			
47.	16.437	PAD, CHK ARM FRICTION		457674			
48.	8.977	SCREW, PAN HD C/REC TAP (M4.2X1.41X16)					
49.	16.323	COVER, HGE ACC HOLE		334135			
50.	16.165	SEAL, FOAM (46.5X.36X.5)		363139			
51.	16.165	PANEL, RR S/D TR (SEE CATALOG)					
52.	16.270	HANDLE, WDO REG		14030586			
53.	16.183	WEATHERSTRIP, WDO INR-LH (EXC DEEP TNTD GLS)		14057425			
	16.183	WEATHERSTRIP, WDO INR-RH (EXC DEEP TNTD GLS)		14057426			
	16.183	WEATHERSTRIP, WDO INR-LH (W/DEEP TNTD GLS)(06)		14057423			
	16.183	WEATHERSTRIP, WDO INR-RH (W/DEEP TNTD GLS)(06)		14057424			
	16.183	WEATHERSTRIP, WDO OTR-LH (EXC DEEP TNTD GLS)		14027785			
	16.183	WEATHERSTRIP, WDO OTR-RH (EXC DEEP TNTD GLS)		14027786			
	16.183	WEATHERSTRIP, WDO OTR-LH (W/DEEP TNTD GLS)(06)		325365			
	16.183	WEATHERSTRIP, WDO OTR-RH (W/DEEP TNTD GLS)(06)		325366			
54.	16.520	VALVE, PRES RELIEF DOOR		461610			
55.	16.260	REGULATOR, WDO-LH (MANUAL)		14027433			
	16.260	REGULATOR, WDO-RH (MANUAL)		14027434			
	N.S.	REGULATOR, WDO-LH (POWER)					
	N.S.	REGULATOR, WDO-RH (POWER)					
	16.263	MOTOR, WDO REG POWER		22062528			
	16.260	REGULATOR, WDO-LH (POWER)		22030649			
	16.260	REGULATOR, WDO-RH (POWER)		22030650			
	10.783	ROLLER, ELEC WDO REG		22049666			
56.	8.977	SCREW, HEX W/CON WA (1/4-20X.62, 275M PZOR)		9439771			
57.	16.155	BRACKET, A/RST-LH		364349			
	16.155	BRACKET, A/RST-RH		364350			
58.	16.341	SEAL, LK REM CONT-LH(1985-89)		14026383			
	16.341	SEAL, LK REM CONT-RH(1985-89)		14026384			
59.	16.341	CONTROL, LK REM-LH		15597655			
	16.341	CONTROL, LK REM-RH		15597656			
60.	16.341	CLIP, REM LK ROD (17.198)		15545178			
61.	16.335	SPRING, O/S REL LVR (10.474)		9827950			
62.	16.157	KNOB, REMOTE ROD (BLACK)		7591126			

© 1990 GENERAL MOTORS SERVICE PARTS OPERATIONS—LIGHT TRUCK 52R

CONTINUED

63.	16.157	**ROD**, LK UPR		14039778	____	____	____
64.	16.190	**STUD**, WDO GLS GDE (10.670) (1985-89)		4868577	____	____	____
65.	16.165	**RETAINER**, TR PNL		15590422	____	____	____
66.	8.917	**NUT**, HEX CON WA (1/4-20)			____	____	____
67.	16.190	**CHANNEL**, WDO FRT GDE-LH		6274455	____	____	____
	16.190	**CHANNEL**, WDO FRT GDE-RH		6274456	____	____	____
68.	8.977	**SCREW**, HWH (1/4-20X1/2)			____	____	____

© 1990 GENERAL MOTORS SERVICE PARTS OPERATIONS—LIGHT TRUCK 52R

TZR16-14
072090

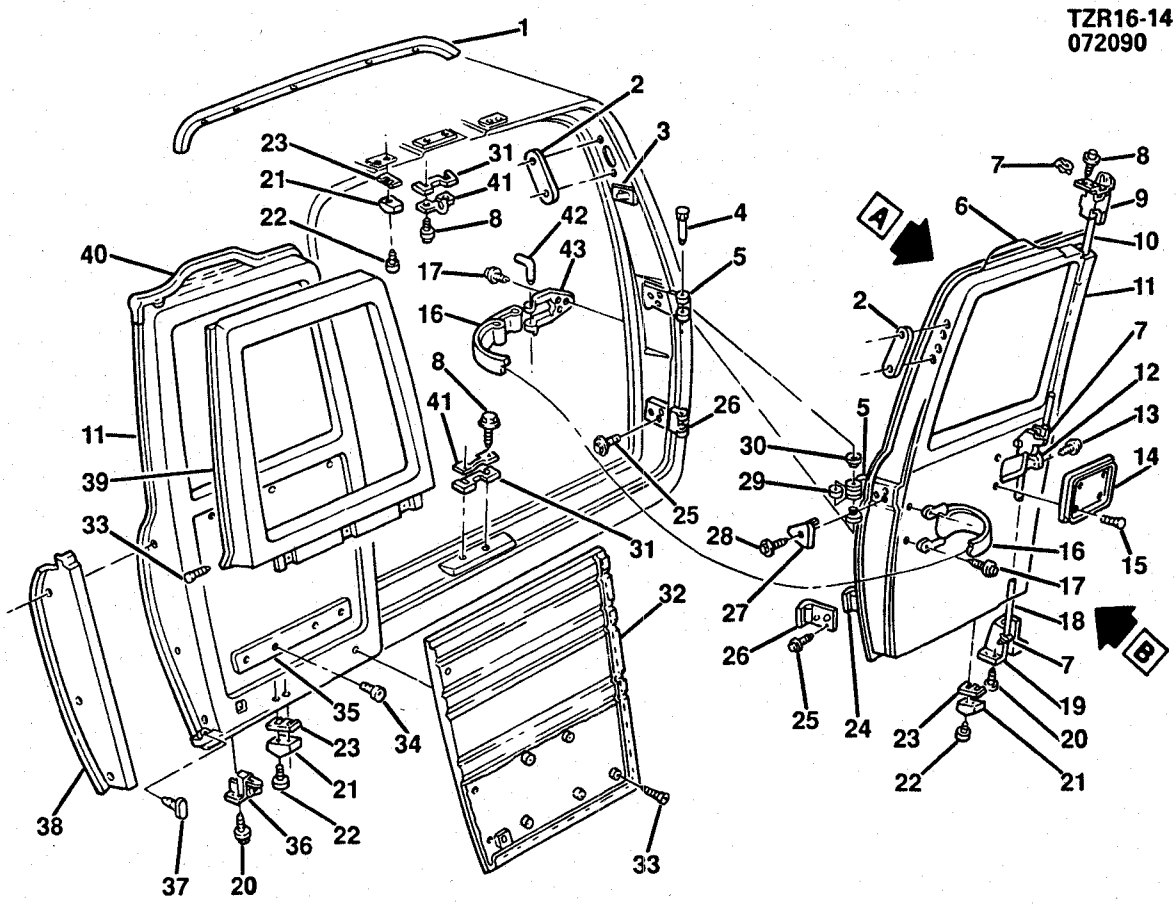

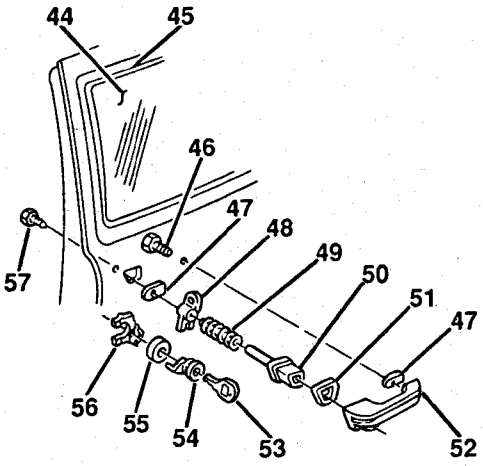

VIEW A

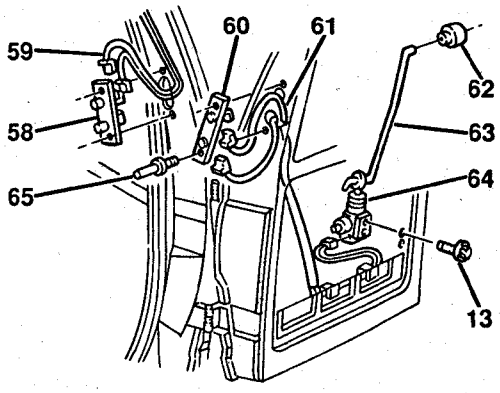

VIEW B

TZR16-14@

© 1990 GENERAL MOTORS SERVICE PARTS OPERATIONS—LIGHT TRUCK 52R

1985-1986 CK(06) DOOR HARDWARE/REAR
1987-1991 RV(06) DOOR HARDWARE/REAR
1987-1991 RV(06) DOOR HARDWARE/REAR

ILL NO.	GROUP	DESCRIPTION	USAGE	QTY	PART NUMBER	PER VEH	PRICE EACH	PRICE EXT
1.	16.227	**WEATHERSTRIP**, R/D TOP			14016509			
2.	16.332	**COVER**, R/D LK ACC HOLE			15593597			
3.	16.494	**SWITCH**, DOME LP			15591112			
4.	16.323	**PIN**, DR HINGE BUSH (10.466)			6271989			
5.	16.320	**HINGE**, R/D UPR-LH & RH (INCL #4,29,30)(*1)			15598713			
6.	16.227	**WEATHERSTRIP**, R/D-RH			9764131			
7.	16.341	**CLIP**, R/D LAT REM CONT ROD (17.198)			15545178			
8.	8.900	**BOLT**, HEX,5/16-18X.88,3/4 THD, 300M,PX			9442184			
	8.931	**WASHER**, SPR LK (5/16, PL)			9439511			
9.	16.330	**LATCH**, R/D UPR			14063114			
10.	16.332	**ROD**, R/D LAT UPR			14037233			
11.	16.160	**DOOR**, RR(-LH)			15620093			
	16.160	**DOOR**, RR(-RH)			15620094			
12.	16.330	**LOCK**, R/D LAT REM			15628725			
13.	8.900	**SCREW**, HEX W/CON WA (1/4-20X1/2, 275M PZOR)			9439770			
14.	16.332	**COVER**, R/D ACC HOLE			14027385			
15.	8.977	**SCREW**, PAN HD C/REC TAP (M4.2X1.41X13, POR)			11504547			
16.	16.437	**STRAP KIT**, R/D CHK (INCL #42, 43)			370349			
17.	8.900	**BOLT**, HEX (1/4-20X3/4, 300M)			9425113			
	8.929	**WASHER**, FL (.28X.50X.030)			507295			
18.	16.332	**ROD**, R/D LAT LWR			14057419			
19.	16.330	**LATCH**, R/D LWR-RH			14057420			
20.	8.908	**SCREW**, FL HD C/REC MA (5/16-18X3/4, ZC)			156431			
21.	16.400	**BUMPER**, R/D			3905665			
22.	8.913	**SCREW**, PAN HD C/REC MA (10-24X.75)			9422540			
23.	16.400	**SPACER**, R/D BPR			3762857			
24.	16.325	**GROMMET**, R/D HGE			14039970			
25.	16.320	**BOLT**, DR HGE (3/8-16X1 1/8) (3.015)			6271980			
26.	16.320	**HINGE**, R/D LWR (INCL #4,29,30) (*1)			15598711			
27.	16.345	**PLUG**, R/D HGE ACC HOLE			15598710			
28.	8.977	**SCREW**, RD WA HD C/RES (M4.2X1.41X13)			11503284			
29.	16.323	**STOP**, R/D HGE			334169			
30.	16.323	**BUSHING**, DR HGE PIN (10.464)			9721917			
31.	16.335	**SPACER**, R/D LAT STRIKER			3951997			
32.	16.165	**PANEL**, R/D TR (W/YE9)(SEE CATALOG)						
33.	8.977	**SCREW**, OV HD C/REC (M4.2X1.41X20)			11503537			
34.	8.977	**SCREW**, PAN HD C/REC TAP (M4.2X1.41X13, POR)			11504547			
35.	16.165	**COVER**, R/D ACC HOLE (LWR)			14027395			
36.	16.330	**LATCH**, R/D LWR-LH			14063113			
37.	N.S.	**FASTENER**, R/D W/STR						
38.	16.166	**MOLDING**, R/D LWR GARN-LH (BLUE)(W/YE9)(PAINT AS REQD)			14068267			
	16.166	**MOLDING**, R/D LWR GARN-RH (BLUE)(W/YE9)(PAINT AS REQD)			14068266			
39.	16.166	**MOLDING**, R/D GARN-LH (BLUE) (W/YE9)(PAINT AS REQD)			15672731			
	16.166	**MOLDING**, R/D GARN-RH (BLUE) (W/YE9)(PAINT AS REQD)			15672732			
40.	16.227	**WEATHERSTRIP**, R/D-LH			9764130			
41.	16.335	**STRIKER**, R/D LAT			351022			
42.	16.437	**PIN**, R/D CHK STRAP			3794770			

© 1990 GENERAL MOTORS SERVICE PARTS OPERATIONS—LIGHT TRUCK 52R

CONTINUED

43.	16.437	**BRACKET**, R/D CHK STRAP		365979	___	___	___
44.	16.464	**GLASS**, R/D-LH (TINTED)		14022873	___	___	___
	16.464	**GLASS**, R/D-RH (TINTED)		14022874	___	___	___
	16.464	**GLASS**, R/D-LH (DEEP TINT)		14022875	___	___	___
	16.464	**GLASS**, R/D-RH (DEEP TINT)		14022876	___	___	___
	16.190	**WINDOW**, RR DR-LH (W/REAR WINDOW DEFOGGER C49)(1990-91)		15614271	___	___	___
	16.190	**WINDOW**, RR DR-RH (W/REAR WINDOW DEFOGGER C49)(1990-91)		15614272	___	___	___
45.	16.470	**SEAL**, R/D GLS (W/DEEP TINT WDOS)		362495	___	___	___
46.	8.977	**SCREW**, HEX W/CON WA (1/4-20X.62, 275M PZOR)		9439771	___	___	___
47.	16.353	**GASKET**, R/D LK O/S HDL(CUT AS REQD)		6258562	___	___	___
48.	16.350	**RETAINER**, O/S LK HDL PUSH BUT SPR		6272588	___	___	___
49.	16.353	**SPRING**, R/D O/S HDL PUSH BUT		3970796	___	___	___
50.	16.353	**BUTTON**, R/D LK O/S HDL PUSH		6274818	___	___	___
51.	16.353	**SEAL**, SI R/D LK O/S HDL PUSH BUT		15593878	___	___	___
52.	16.350	**HANDLE**, R/D LK O/S (INCL #48, 49,50,51)		6274816	___	___	___
53.	2.187	**KEY**, BLANK OVAL HEAD		1154611	___	___	___
54.	16.328	**CYLINDER**, R/D LK (BRIGHT FINISH)		9632729	___	___	___
55.	10.550	**GASKET**, DR LK CYL		15646921	___	___	___
56.	16.353	**RETAINER**, R/D LK CYL (10.551)		9728247	___	___	___
57.	8.900	**SCREW**, HEX HD MA (.250-20X1.25)		9433298	___	___	___
58.	16.263	**CONTACT**, PWR DR LK DR		469394	___	___	___
59.	N.S.	**WIRE ASM**, R/D PWR LK EXT (SERVICED BY 16 GA WIRE & THE FOLLOWING CONNECTORS)			___	___	___
	8.965	**CONNECTOR**, BDY WRG HARNESS		8911773	___	___	___
	8.965	**CONNECTOR**, ENGINE COMPARTMENT		8911256	___	___	___
60.	16.263	**HARNESS**, R/D PWR DR LK WRG		12041696	___	___	___
61.	16.263	**HARNESS**, PWR DR LK SI R/D WRG		12041696	___	___	___
62.	16.157	**RETAINER**, R/D LK REM CONT LK ROD (12.242)		12338081	___	___	___
63.	16.341	**ROD**, R/D LK (W/PWR DR LK)		15593881	___	___	___
64.	16.263	**ACTUATOR**, PWR R/D LK (10.485)		22020256	___	___	___
	16.263	**BRACKET**, R/D PWR LK ACTUATOR		22049759	___	___	___

NOTE 1: WHEN USED ON RH SIDE, REVERSE PIN.

RPO DEFINITIONS
C49-DEFOGGER/REAR WINDOW ELECTRIC.
YE9-EQUIPMENT PACKAGE/COMFORT, CONVENIENCE & DECOR.
ZW9-BASE BODY OR CHASSIS

© 1990 GENERAL MOTORS SERVICE PARTS OPERATIONS—LIGHT TRUCK 52R

NOTES

BLANK PAGE

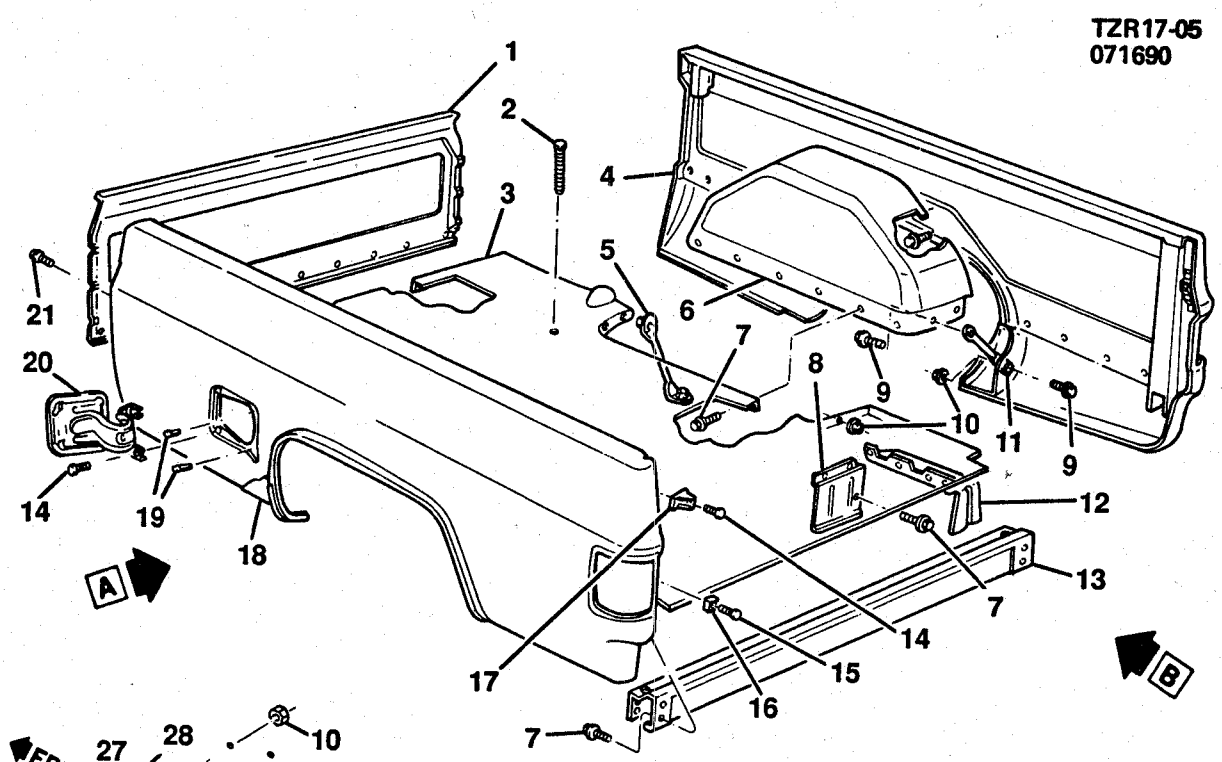

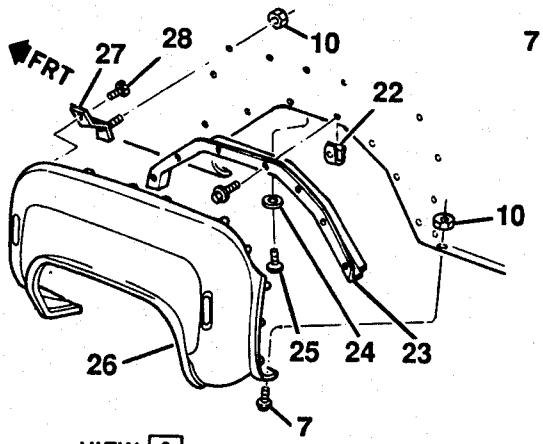

VIEW A
W/RO5

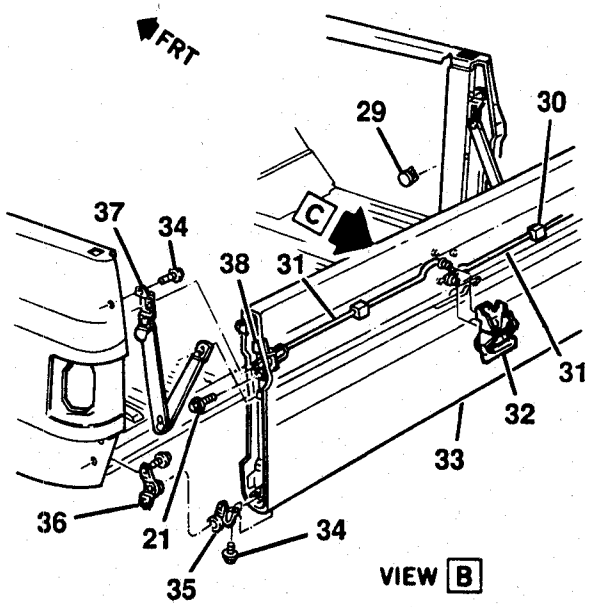

VIEW B

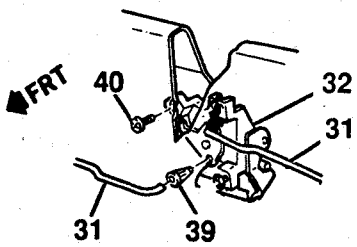

VIEW C

TZR17-05@

1985-1986 CK PICKUP BOX/FLEETSIDE
1987-1991 RV PICKUP BOX/FLEETSIDE

ILL NO.	GROUP	DESCRIPTION	USAGE	QTY	PART NUMBER	PER VEH	PRICE EACH	PRICE EXT
1.	17.455	**PANEL**, PICKUP BOX FRT			15628614			
2.	17.090	**BOLT**, PUBX BODY (.5X13X11.180, ZP)(1985-91)			14039924			
	9.008	**BOLT**, BODY HOLDN (1/2-13X5.20, 260M)(1985-86)			14032766			
	9.008	**BOLT**, PUBX BODY (.5X13X10.625, ZP)(1985-87)			14013721			
	9.008	**BOLT**, PUBX (.5X13X4.250, ZP) (1987-91)			15599971			
3.	17.400	**PLATFORM**, (8 FT BOX)(INCL #13)			15628611			
	17.400	**PLATFORM**, (6 1/2 FT BOX)(INCL #13)(1985-87)			15596993			
4.	17.505	**PANEL**, SI-LH (6 1/2 FT)(1985-87)			15597623			
	17.505	**PANEL**, SI-RH (6 1/2 FT)(W/AUX TK)(1985-87)			15597624			
	17.505	**PANEL**, SI-RH (6 1/2 FT)(EXC AUX TK)(1985-87)			15597632			
	17.505	**PANEL**, SI-LH (8 FT)			15628615			
	17.505	**PANEL**, SI-RH (8 FT)(W/AUX TK)			15628616			
	17.505	**PANEL**, SI-RH (8 FT)(EXC AUX TK) (1985-89)			15628618			
	17.505	**PANEL**, SI-RH (8 FT)(W/DUAL WHLS EXC AUX TK)(INCL #19) (1985-86)			15591208			
5.	17.505	**BRACE**, SI OTR PNL			330438			
6.	17.505	**PANEL**, W/H			14027451			
7.	8.900	**BOLT**, HEX (5/16-18X5/8, 280M)			180075			
	8.931	**WASHER**, SPR LK (5/16, PL)			9439511			
8.	17.505	**PANEL**, SI INR PNL-LH (W/DUAL RR WHLS)			330489			
	17.505	**PANEL**, SI INR PNL-RH (W/DUAL RR WHLS)			330490			
9.	8.900	**SCREW**, HEX W/CON WA (5/16-18X7/8)(8.080)			473892			
10.	8.917	**NUT**, HFH (5/16-18X.20, 286M)			1359887			
11.	17.505	**BRACE**, PICKUP BOX S/PNL (EXC R05)(1987-91)			15606342			
12.	17.505	**SHIELD**, SI PNL-LH (8 FT)			467913			
	17.505	**SHIELD**, SI PNL-RH (8 FT)			467914			
	17.505	**SHIELD**, SI PNL-LH (6 1/2 FT) (1985-87)			467911			
	17.505	**SHIELD**, SI PNL-RH (6 1/2 FT) (1985-87)			467912			
13.	17.405	**SILL**, RR CR			15628612			
14.	8.913	**SCREW**, PAN HD TORX (1/4-20X5/8, 275M)			14010976			
15.	8.977	**SCREW**, PAN HD C/REC TAP (#10-16X1/2, CAD)			9437761			
16.	17.225	**BUMPER**, END GATE LINK (9.786)			6262029			
17.	17.202	**BUMPER**, END GATE			14032787			
18.	17.507	**SHIELD**, BODY SI PNL STONE-LH (PLASTIC)			14027529			
	17.507	**SHIELD**, BODY SI PNL STONE-RH (PLASTIC)			14027530			
19.	16.570	**BUMPER**, F/TNK FIL DR (3.705)			14010707			
20.	16.570	**DOOR**, FUEL TANK FIL			14052026			
	16.570	**SPRING**, FUEL TANK FILLER DR HGE (12.945)			4813235			
	16.570	**PIN**, FUEL TANK FIL DR HGE			476907			
21.	8.900	**BOLT**, HEX LG FL WA (5/16-18X.88, 275M POR)			12337916			
22.	8.921	**NUT**, U-SHAPE 5/16-18 A=1.25, B=.68,C=.84PNL RANGE=.025 1.150 POR			12338146			

© 1990 GENERAL MOTORS SERVICE PARTS OPERATIONS—LIGHT TRUCK 52R

23.	17.505	**PANEL**, SI PNL W/H-LH (W/DUAL WHLS)		330393	___	___	___
	17.505	**PANEL**, SI PNL W/H-RH (W/DUAL WHLS)		330394	___	___	___
24.	8.929	**WASHER**, FL (.344X.688X.065)		120393	___	___	___
25.	8.977	**SCREW**, TRI LOB HEX W/FL WA, M8X1.25X20,PO		11515358	___	___	___
26.	8.203	**FENDER**, RR-LH (W/DUAL WHLS)		15606405	___	___	___
	8.203	**FENDER**, RR-RH (W/DUAL RR WHLS)		15606406	___	___	___
27.	8.212	**BRACKET**, R/FDR RR (W/R05) (1987-90)		15606404	___	___	___
28.	8.977	**SCREW**, HEX W/FL WA (M8X2.12X30 POR)		11504765	___	___	___
29.	16.400	**PLUG**, PICKUP BOX SI PNL HOLE		14010953	___	___	___
30.	16.157	**INSULATOR**, END GATE LAT REM CONT ROD		14007449	___	___	___
31.	17.198	**ROD**, END GATE LAT OPER		14021389	___	___	___
32.	17.204	**HANDLE**, END GATE LAT OPER		15569031	___	___	___
33.	17.185	**GATE**, PUBX END((CHEV))		15628608	___	___	___
	17.185	**GATE**, PUBX END((GMC))		15628610	___	___	___
34.	3.015	**BOLT**, HEX W/CONN WA (3/8-16X1.25, POR)		6271980	___	___	___
35.	17.208	**HINGE**, END GATE-LH		15596975	___	___	___
	17.208	**HINGE**, END GATE-RH		15596976	___	___	___
36.	17.208	**HINGE**, END GATE LH		14021385	___	___	___
	17.208	**HINGE**, END GATE RH		14021386	___	___	___
37.	17.225	**PLATE**, W/LINK & STRIKER, END GATE-LH		458025	___	___	___
	17.225	**PLATE**, W/LINK & STRIKER, END GATE-RH		458026	___	___	___
38.	17.198	**LATCH**, END GATE-LH		15594643	___	___	___
	17.198	**LATCH**, END GATE-RH		15594644	___	___	___
39.	17.198	**CLIP**, T/GATE LATCH OPER ROD		3889864	___	___	___
40.	8.913	**SCREW**, PAN HD C/REC W/CON WA (.312-18X.75, ZC)		9431663	___	___	___

RPO DEFINITIONS
R05-WHEEL CONVERSION/DUAL REAR.

NOTES

BLANK PAGE

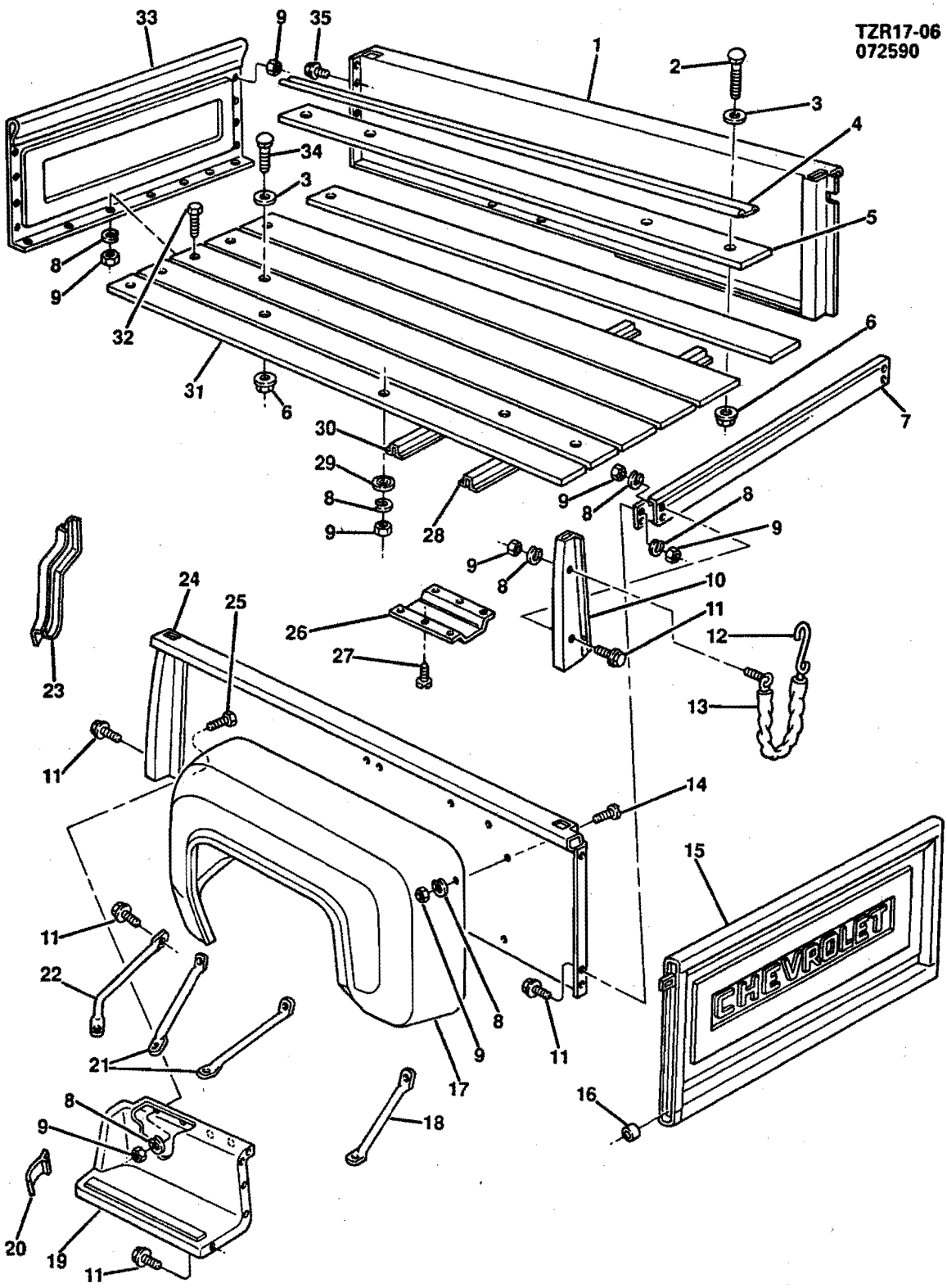
TZR17-06
072590
CHEVROLET
TZR17-06@

1985-1986 CK(03) PICKUP BOX/STEPSIDE
1987 RV(03) PICKUP BOX/STEPSIDE

ILL NO.	GROUP	DESCRIPTION	USAGE	QTY	PART NUMBER	PER VEH	PRICE EACH	PRICE EXT
1.	17.505	**PANEL**, PUBX SI-LH			15591005			
	17.505	**PANEL**, PUBX SI-RH			15591006			
2.	9.008	**BOLT**, PUBX BODY, RD HD SQ NK (1/2"-13X4 1/4")(NYLOC)			15599971			
3.	17.090	**WASHER**, PUBX BODY			14013723			
4.	17.442	**IRON**, FLR BRD WEAR (UNIV)(CUT AS REQ)			3847382			
5.	17.400	**BOARD**, FLR (CUT AS REQ)			3765739			
6.	8.915	**NUT**, HEX 1/2X.315 286M 71,500 PSI CB BRT			9439586			
	8.929	**WASHER**, SPL FL (17/32X1 1/4X1/8)			3983589			
7.	17.405	**SILL**, RR CR			14043989			
8.	8.931	**WASHER**, MET REG HELICAL LK M8			9439511			
9.	8.915	**NUT**, HEX(5/16-18X.25 286M POR)			9439493			
10.	17.462	**POCKET**, RR STAKE-LH			14026331			
	17.462	**POCKET**, RR STAKE-RH			14026332			
11.	8.900	**SCREW**, (5/16-18 X 7/8 W/CON WA AC PT 275M)			3846202			
12.	17.225	**CHAIN**, END GATE-LH			3810823			
	17.225	**CHAIN**, END GATE-RH			3810824			
13.	17.225	**COVER**, END GATE CHAIN			3810750			
14.	8.913	**SCREW**, PAN C/R (5/16-18X.75 1010 CAD BRT)			9437685			
15.	17.185	**GATE**, PUBX END (CHEV)			14026349			
	17.185	**GATE**, PUBX END (GMC)			14026356			
16.	17.208	**TRUNNION**, END GATE HGE			3810706			
17.	8.203	**FENDER**, RR-LH			14073933			
	8.203	**FENDER**, RR-RH (EXC AUX TK)			14027366			
	8.203	**FENDER**, RR-RH (W/AUX TK)			14073934			
18.	8.212	**BRACE**, RR FDR RR			6274908			
19.	8.225	**BOARD**, RUN-LH (6 1/2')			6264181			
	8.225	**BOARD**, RUN-RH (6 1/2')			6264182			
	8.225	**BOARD**, RUN-LH (8')			347621			
	8.225	**BOARD**, RUN-RH (8')			347622			
20.	N.S.	**SHIELD**, STONE						
21.	8.212	**BRACE**, RR FDR CTR			6274905			
22.	8.212	**BRACE**, RR FDR FRT-LH			375119			
	8.212	**BRACE**, RR FDR FRT-RH			375120			
23.	8.228	**HANGER**, RUN BRD-LH			6272669			
	8.228	**HANGER**, RUN BRD-RH			6272670			
25.	8.900	**BOLT**, HEX (5/16-18X3/4,.61-THD LEN 280M PS)			9440967			
26.	N.S.	**SHIELD**, FLOOR BOARD HEAT						
27.	8.977	**SCREW**, PAN HD C/R TAP W/FL WA (M4.2X1.41X20 FL 12.5)			11508869			
28.	17.405	**SILL**, CROSS (#1,2,3,4,5)			14039857			
29.	8.929	**WASHER**, FL (.343X1..25X1/16 ZINC)			9418924			
30.	17.405	**REINFORCEMENT**, FLOOR BOARD			14026313			
31.	17.400	**PLATFORM** (6 1/2')(INCL #7,8,14, 24,26,27)			15554977			
	17.400	**PLATFORM**, (8')(INCLS #7,8,14, 24,26,27)			15554976			
32.	8.903	**BOLT**, RD HD SQ NK (5/16"-18X1 1/2")						
33.	17.455	**PANEL**, PICKUP BOX FRT			14027365			
34.	9.008	**BOLT**, PUBX BDY, RD HD SQ NK (1/2"-13X10 5/8")(NYLOC)			14013721			
35.	8.900	**BOLT**, HEX 5/16-18X7/8 .741-THD LEN 300MPC			9425117			
	8.931	**WASHER**, SPR LK 5/16 PL			9439511			

© 1990 GENERAL MOTORS SERVICE PARTS OPERATIONS—LIGHT TRUCK 52R

TZR17-07
071890

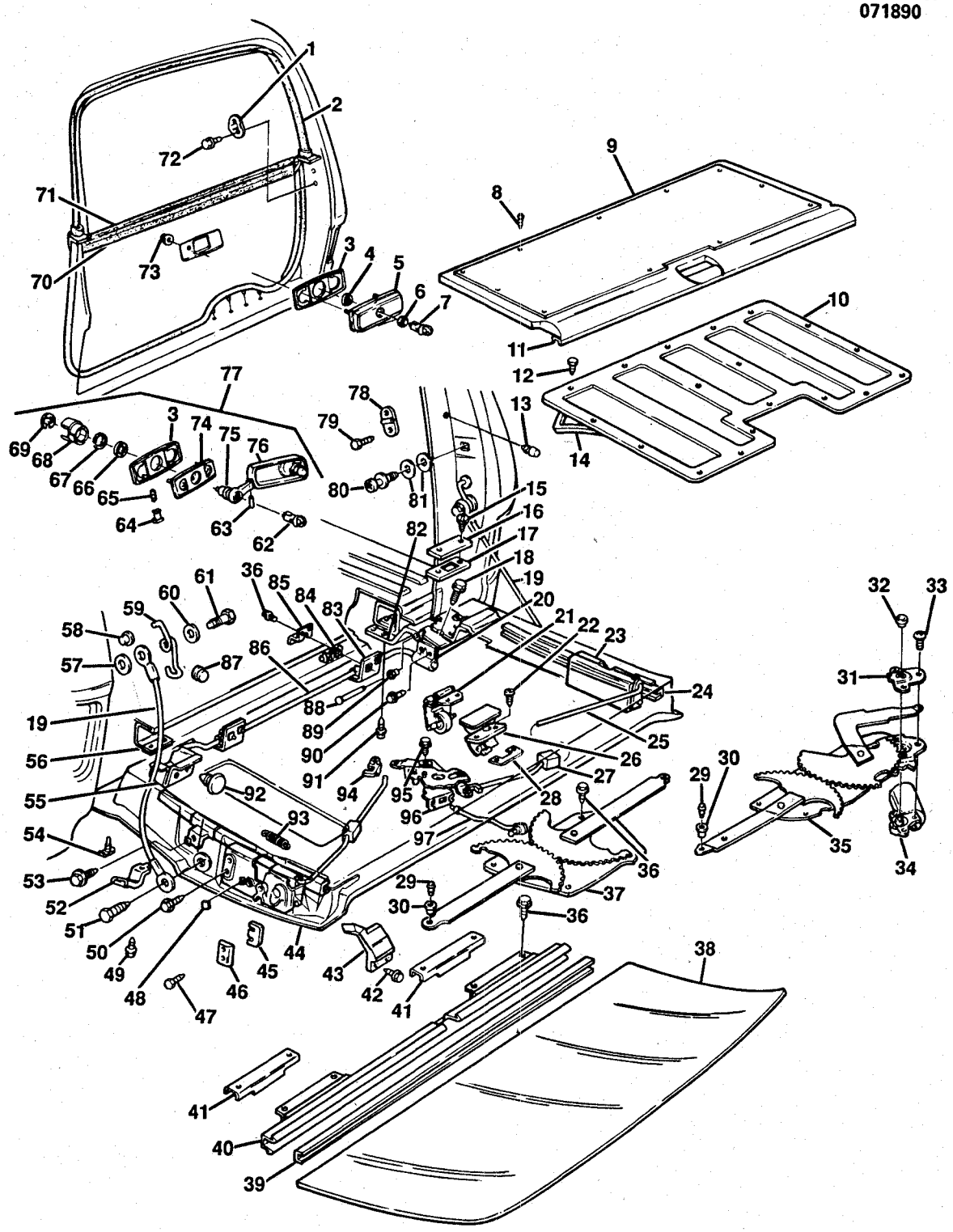

TZR17-07@

© 1990 GENERAL MOTORS SERVICE PARTS OPERATIONS—LIGHT TRUCK 52R

1985-1986 CK(06) ENDGATE
1987-1991 RV(06) ENDGATE

ILL NO.	GROUP	DESCRIPTION	USAGE	QTY	PART NUMBER	PER VEH	PRICE EACH	PRICE EXT
1.	17.204	**BUMPER**, END GATE			337817			
2.	17.185	**WEATHERSTRIP**, END GATE			15594665			
3.	16.270	**GASKET**, WDO REG HDL			15606479			
4.	17.198	**BEZEL**, WDO REG LK CYL (W/ELEC WDO)(12.195)			5713260			
5.	17.204	**ESCUTCHEON**, WDO REG LK CYL (W/ELEC WDO)(12.195)			9713781			
6.	16.328	**GASKET**, LK CYL (12.247)			15646921			
7.	17.198	**LOCK**, END GATE SAF (W/ELEC WDO)(12.248)(1985-86)			6259467			
	17.198	**LOCK**, END GATE (W/SWITCH) (W/ELEC T/GATE WDO)(1987-88)			6259511			
	17.198	**LOCK**, E/GATE(W/SWITCH (1989-91))			15618884			
8.	8.977	**SCREW**, OV HD & FIN WA (M4.2X1.41X25)			11501167			
9.	17.185	**PANEL**, TR (SEE CATALOG)						
10.	17.185	**COVER**, WDO REG ACC HOLE			6274995			
11.	17.190	**WEATHERSTR**, GLS INR (W/YE9)			14049971			
12.	8.977	**SCREW**, PN HD TORX TAP (M4.2X1.41X13)			11504646			
13.	17.202	**BUMPER**, END GATE			335453			
14.	17.185	**SEAL**, REG ACC HOLE CVR			334286			
15.	8.900	**SCREW**, PAN HD C/REC TAP (1/4-20X5/8, 280M)			180018			
16.	17.185	**COVER**, HGE ACC HOLE			6274993			
17.	17.185	**SEAL**, HGE ACC HOLE CVR			6274994			
18.	8.900	**BOLT**, HEX (3/8-16X5/8)						
	8.931	**WASHER**, LK (3/8)						
19.	17.202	**SUPPORT**, GATE (12.203)(1985-88)			15599489			
	17.202	**SUPPORT**, END GATE (12.203) (1989-91)			15641731			
20.	17.202	**RETAINER**, TORQ ROD-RH			326152			
21.	17.198	**LEVER**, REM CONT BLOCKOUT			339984			
22.	17.198	**BOLT**, LAT REM CONT HDL (12.242)			8782501			
23.	17.198	**LATCH**, END GATE-LH (INCL #37, 51)			14039701			
	17.198	**LATCH**, END GATE-RH (INCL #37, 51)			14039702			
24.	17.190	**CHANNEL**, WDO GLS-LH			14051899			
	17.190	**CHANNEL**, WDO GLS-RH			326162			
25.	17.198	**ROD**, CONT-LH			14039707			
	17.198	**ROD**, CONT-RH			14039708			
26.	17.204	**HANDLE**, REM CONT (12.242)			4495180			
27.	16.157	**INSULATOR**, CONT ROD			14007449			
28.	17.204	**GASKET**, LAT REM CONT HDL			470993			
29.	16.261	**PIN**, WDO REG RLR (12.195)			12338147			
30.	16.261	**ROLLER**, WDO REG (12.195)			4158245			
31.	16.263	**PLATE** (INCL #95)(12.195)			5718404			
32.	16.263	**BUSHING**, REG MTR SHF			5718406			
33.	N.S.	**SCREW**, RD HD C/REC W/EXT TTH LK WA (1/4-20X1/2)						
34.	16.263	**MOTOR**, REG (W/ELEC WDO)			22048329			
35.	16.260	**REGULATOR** (W/ELEC WDO)			6258117			
36.	8.900	**BOLT**, HEX W/CON WA (1/4-20X5/8)						
37.	16.260	**REGULATOR**, WDO (EXC ELEC WDO)			327946			
38.	17.190	**GLASS**, END GATE WDO (SEE CATALOG)						
39.	16.190	**FILLER**, GLS CHANNEL (SEE CATALOG)						
40.	17.190	**SASH**, WDO GLS			14049998			
41.	16.261	**CAM**, WDO GLS (10.792)			20171141			

© 1990 GENERAL MOTORS SERVICE PARTS OPERATIONS—LIGHT TRUCK 52R

CONTINUED

42.	8.977	SCREW, HEX WA HD TAP (#10-16X3/4)		9437761			
43.	17.185	WEATHERSTRIP, UPR CORNER-LH		14049967			
	17.185	WEATHERSTRIP, UPR CORNER-RH		14049968			
44.	17.185	GATE, END		15618424			
45.	17.204	SPACER, WEDGE PLATE		347631			
46.	17.204	BUMPER, WEDGE (ON GATE)		14021298			
47.	8.977	SCREW, TRUSS HD C/R (1/4-20X7/8)		9440202			
48.	17.225	BUMPER, LAT CAM (16.332)					
49.	8.900	BOLT, HEX (5/16-18X5/8,280MM)		180075			
	8.931	WASHER, LK (5/16)		9439511			
50.	8.900	BOLT, HEX (3/8-16X3/4)		180120			
	8.931	WASHER, LK (3/8)		9439512			
51.	17.202	BOLT, SUPT LWR (12.184)		7740373			
52.	17.202	RETAINER, TORQ ROD-LH		341934			
53.	17.185	BOLT, WDO GLS CHAN		7663699			
54.	N.S.	FASTENER, TORQ ROD INSL					
55.	N.S.	POCKET, HINGE (PART OF #48)					
56.	17.202	INSULATOR, TORQ ROD		341933			
57.	17.198	WASHER, E/GATE SUPPORT (1.56X.39.075)		15569033			
58.	17.208	PLUG, SUPT SPR		3738197			
59.	17.202	SPRING, SUPT-LH		15641773			
	17.202	SPRING, SUPT-RH		335480			
60.	8.929	WASHER, PLAIN .531 CZ		120396			
61.	17.202	BOLT, SUPT UPR (12.184)		7740374			
62.	17.198	CYLINDER, END GATE LK (EXC ELEC WDO)(12.248)		338285			
63.	17.204	PIN, WDO REG HDL (12.195)		5717887			
64.	16.260	PAWL, WDO REG CLU		5713268			
65.	16.260	SPRING, CLU PAWL (12.195)		4303911			
66.	17.204	WASHER, DRIVE (12.195)		5713274			
67.	17.204	RETAINER, DRIVE (12.195)		5713276			
68.	16.260	CLUTCH, WDO REG		9702916			
69.	8.934	RING, TYPE TE (1/4)		9431762			
70.	17.190	WEATHERSTRIP, WDO GLS OTR		349896			
71.	17.190	WEATHERSTR, WDO GLS INR (EXC YE9)		14049969			
72.	8.900	BOLT, HEX (1/4-20X5/8)					
73.	8.915	NUT, HEX (1/4-20, 286M ZOR)		9439519			
74.	N.S.	BODY, HDL (PART OF #87)					
75.	17.204	DRIVER, WDO REG (12.195)		9703346			
76.	17.204	HANDLE, WDO REG (12.195)		9703344			
77.	17.204	HANDLE (INCL #76,77,79,83,84, 88)		335566			
78.	17.204	BUMPER, WGE (ON BODY)		337817			
79.	8.900	BOLT, HEX (1/4-20X5/8)					
80.	17.198	STRIKER, END GATE		6273622			
81.	17.198	WASHER, STRIKER		6273619			
82.	17.208	HINGE, GATE (INCL #35,36)		337787			
83.	N.S.	PLATE, TORQ ROD (PART OF #48)					
84.	17.202	INSULATOR, TORQ ROD		334294			
85.	17.202	RETAINER, TORQ ROD CTR		326153			
86.	17.202	ROD, TORQ		14070538			
87.	8.973	PLUG, BUTTON (1")		14049810			
88.	17.208	PIN, HINGE BUSH		6271989			
89.	17.208	BUSHING, HGE PIN		335524			
90.	8.900	BOLT, HEX (5/16-18X3/4)					
91.	8.977	SCREW, HEX HD TAP (3/8-16X1 1/8)					
92.	17.190	BUMPER, WDO GLS (12.212)		8785295			
93.	N.S.	SPRING (PART OF #17)					
94.	17.198	CLIP, CONT ROD		15545178			
95.	17.198	SCREW, LAT ROD ADJ		9718487			
96.	17.198	LOCK, LAT		14039709			
97.	17.198	ROD, REM CONT HDL		327953			

RPO DEFINITIONS
A33-WINDOW/ELECTRIC CONTROL,TAILGATE OR BACK DOOR
YE9-EQUIPMENT PACKAGE/COMFORT, CONVENIENCE & DECOR.

© 1990 GENERAL MOTORS SERVICE PARTS OPERATIONS—LIGHT TRUCK 52R

NOTES

BLANK PAGE

TZR17-08
072590

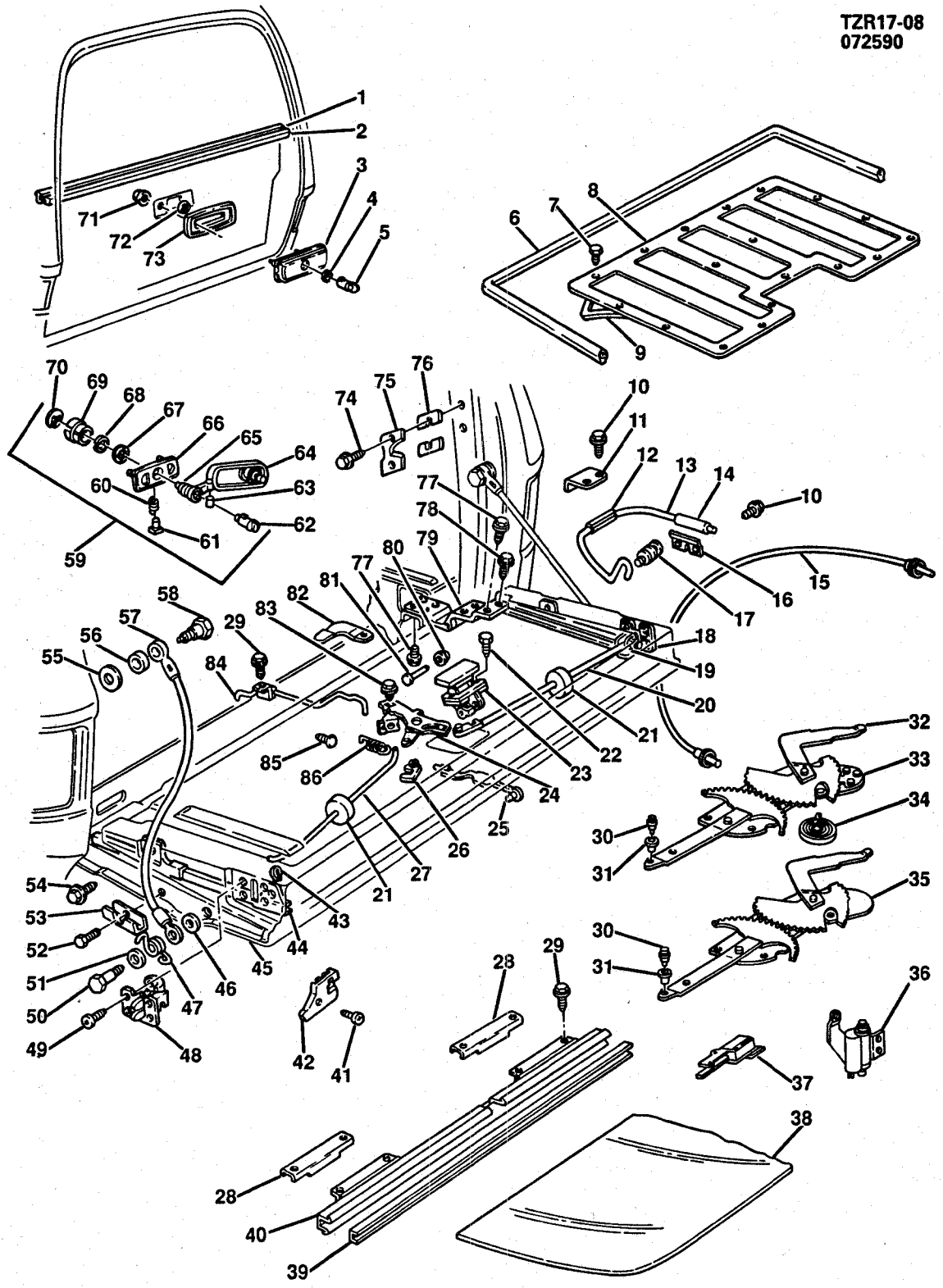

TZR17-08@

1985-1986 K(16) ENDGATE
1987-1991 V(16) ENDGATE

ILL NO.	GROUP	DESCRIPTION	USAGE	QTY	PART NUMBER	PER VEH	PRICE EACH	PRICE EXT
1.	17.190	**WEATHERSTRIP**, WDO GLS INR			327006			
2.	17.190	**WEATHERSTRIP**, WDO GLS OTR			327005			
3.	17.204	**ESCUTCHEON**, WDO REG SAF LK CYL (12.195)			9713781			
4.	16.328	**GASKET**, DR SAF LK CYL			4587931			
5.	17.198	**LOCK**, END GATE SAF (W/ELEC WDO)(12.248)			6259467			
6.	17.185	**WEATHERSTRIP**, END GATE			326934			
7.	8.977	**SCREW**, PAN HD C/REC TAP (M4.2X1.41X13)			11504646			
8.	17.185	**COVER**, WDO REG ACC HOLE			6274890			
9.	17.185	**SEAL**, WDO REG ACC HOLE CVR (LH & RH)			15593570			
	17.185	**SEAL**, WDO REG ACC HOLE CVR (CENTER)			15593571			
10.	8.977	**SCREW**, HEX W/CON WA (1/4-20X5/8)			9439771			
11.	17.202	**RETAINER**, TORQ ROD			6274854			
12.	17.202	**INSULATOR**, TORQ ROD-LH			334103			
	17.202	**INSULATOR**, TORQ ROD-RH			334104			
13.	17.202	**ROD**, TORQ-LH			15628735			
	17.202	**ROD**, TORQ-RH			15628736			
14.	17.202	**INSULATOR**, TORQ ROD			6274853			
15.	16.261	**CABLE**, END GATE WDO REG (1985-88)(W/ELEC WDO)			15606445			
	16.261	**CABLE**, END GATE WDO REG (1989-91)(W/ELEC WDO)			15646923			
16.	17.202	**BRACKET**, TORQ ROD			337899			
17.	17.202	**STUD**, TORQ ROD ANC			473894			
18.	17.198	**ROD**, END GATE-RH			14039710			
19.	17.198	**CLIP**, LAT REM CONT ROD			15545178			
20.	17.198	**ROD**, LAT REM CONT-RH			14039716			
21.	16.157	**INSULATOR**, LAT ROD			14007449			
22.	17.198	**BOLT**, LAT REM CONT HDL (12.242)			8782501			
23.	17.204	**HANDLE**, LAT CONT (12.242)			4495180			
	17.204	**GASKET**, LAT CONT HDL			470993			
24.	17.198	**LOCK**, LAT			14039712			
25.	17.198	**ROD**, REM CONT HDL (12.242)			8742340			
26.	17.198	**CLIP**, LAT ROD			15545178			
27.	17.198	**ROD**, LAT REM CONT-LH			473917			
28.	16.261	**CAM**, WDO GLS (10.792)			20171141			
29.	N.S.	**SCREW**, HEX (1/4-20X1/2)						
30.	16.261	**ROLLER**, WDO REG (12.195)			4158245			
31.	16.261	**PIN**, WDO REG RLR (12.195)			4158246			
32.	16.260	**REGULATOR**, WDO (LESS TRANS) (W/ELEC WDO)			15616297			
33.	16.260	**TRANSMISSION**, WDO REG (W/ELEC WDO)			15534873			
34.	16.260	**SPRING**, WDO REG (W/ELEC WDO)			475495			
35.	16.260	**REGULATOR**, END GATE WDO (EXC ELEC WDO)(1985-89)			15641780			
36.	16.263	**MOTOR**, W/BRKT, PWR WDO			22073442			
37.	16.263	**SWITCH**, MOTOR CUT OUT			469341			
38.	17.190	**GLASS**, END GATE WDO(TINTED)			14026489			
	17.190	**GLASS**, END GATE WDO(DEEP TINT)			15531501			
39.	16.190	**FILLER**, GLS CHANNEL(.047X100') (CUT AS REQD)			370390			
40.	17.190	**SASH**, WDO REG			340053			
41.	8.977	**SCREW**, OV HD C/REC (#10-16X3/4)						
42.	17.202	**CAP**, GLS GUIDE CHAN-LH			15522707			
	17.202	**CAP**, GLS GUIDE CHAN-RH			15522708			
43.	16.332	**CLIP**, LAT REM CONT ROD			3905674			

© 1990 GENERAL MOTORS SERVICE PARTS OPERATIONS—LIGHT TRUCK 52R

CONTINUED

44.	17.190	**CHANNEL**, WDO GLS-LH		470949			
	17.190	**CHANNEL**, WDO GLS-RH		6274836			
45.	17.185	**GATE**, END		15571691			
46.	8.929	**WASHER**, FL (15/32X15/16X1/16, ZP)		120395			
47.	17.202	**SPRING**, SUPT-LH		14021315			
	17.202	**SPRING**, SUPT-RH		14021316			
48.	17.198	**LATCH**, END GATE-LH		473995			
49.	8.908	**SCREW**, FL SERR HD C/REC MA (.250-20X.625, PEOR)		9439772			
50.	17.202	**BOLT**, SUPT LWR		14021317			
51.	8.929	**WASHER**, MET (15X24X1 PC)		11041252			
52.	8.977	**SCREW**, PAN HD C/REC TAP (M4.2X1.41X16, POR)		11504736			
53.	17.208	**GUIDE**, SUPT		334132			
54.	8.977	**SCREW**, HEX W/CON WA (1/4-20X.62, 275M PZOR)					
55.	17.189	**WASHER**, E/GATE SUPPORT		15569033			
56.	17.202	**SPACER**, SUPT		14021292			
57.	17.202	**SUPPORT**, END GATE		6274850			
58.	17.202	**BOLT**, SUPT UPR		7740374			
59.	17.204	**HANDLE** (INCL #63,64,65,66,67, 68)(1985-89)		335566			
60.	16.260	**SPRING**, CLU PAWL (12.195) (1985-89)		4303911			
61.	16.260	**PAWL**, WDO REG CLU(1985-89)		5713268			
62.	17.198	**CYLINDER**, END GATE LK (12.248) (EXC ELEC WDO)(1985-89)		338285			
63.	17.204	**PIN**, WDO REG HDL (12.195)(1985-89)		5717887			
64.	17.204	**HANDLE**, WDO REG (12.195)) (1985-89)		9703344			
65.	17.204	**DRIVER**, WDO REG (12.195)(1985-89)		9703346			
66.	N.S.	**BODY**, REG HDL (PART OF #85) (1985-89)					
67.	17.204	**WASHER**, REG DRIVE (12.195) (1985-89)		5713274			
68.	17.204	**RETAINER**, WDO REG DRIVE (12.195)(1985-89)		5713276			
69.	16.260	**CLUTCH**, WDO REG(1985-89)		9702916			
70.	8.934	**RING**, TYPE TE #25		9431762			
71.	8.915	**NUT**, HEX (1/4-20)		9439519			
72.	17.198	**BEZEL**, WDO REG LK CYL (12.195) (W/ELEC WDO)		5713260			
73.	17.204	**BEZEL**, WDO REG HDL		327015			
74.	8.900	**BOLT**, HEX (5/16-18X7/8)		9442184			
	8.931	**WASHER**, LK (5/16)		9439511			
75.	17.198	**STRIKER**, END GATE-LH		6274847			
	17.198	**STRIKER**, END GATE-RH		6274848			
76.	17.198	**SPACER**, LAT STRIKER		6274849			
77.	8.900	**BOLT**, HEX (3/8-16X7/8)		9442119			
	8.931	**WASHER**, LK (3/8)		9439512			
78.	8.900	**BOLT**, HEX SERR FLG (3/8-16X1)		9437242			
79.	17.208	**HINGE**, GATE (INCL #66,68)		337788			
80.	17.208	**BUSHING**, HGE PIN		335524			
81.	17.208	**PIN**, HINGE BUSH (10.466)		6271989			
82.	17.225	**STOP**, LAT BLOCKOUT ROD		335452			
83.	17.198	**SCREW**, END GATE LATCH REM(LH THD)		9718487			
84.	17.198	**ROD**, LAT BLOCKOUT		331638			
85.	17.190	**BUMPER**, WDO GLS (12.212)		8785295			
86.	17.198	**SPRING**, LAT BLOCKOUT		15593866			

© 1990 GENERAL MOTORS SERVICE PARTS OPERATIONS—LIGHT TRUCK 52R

NOTES

BLANK PAGE

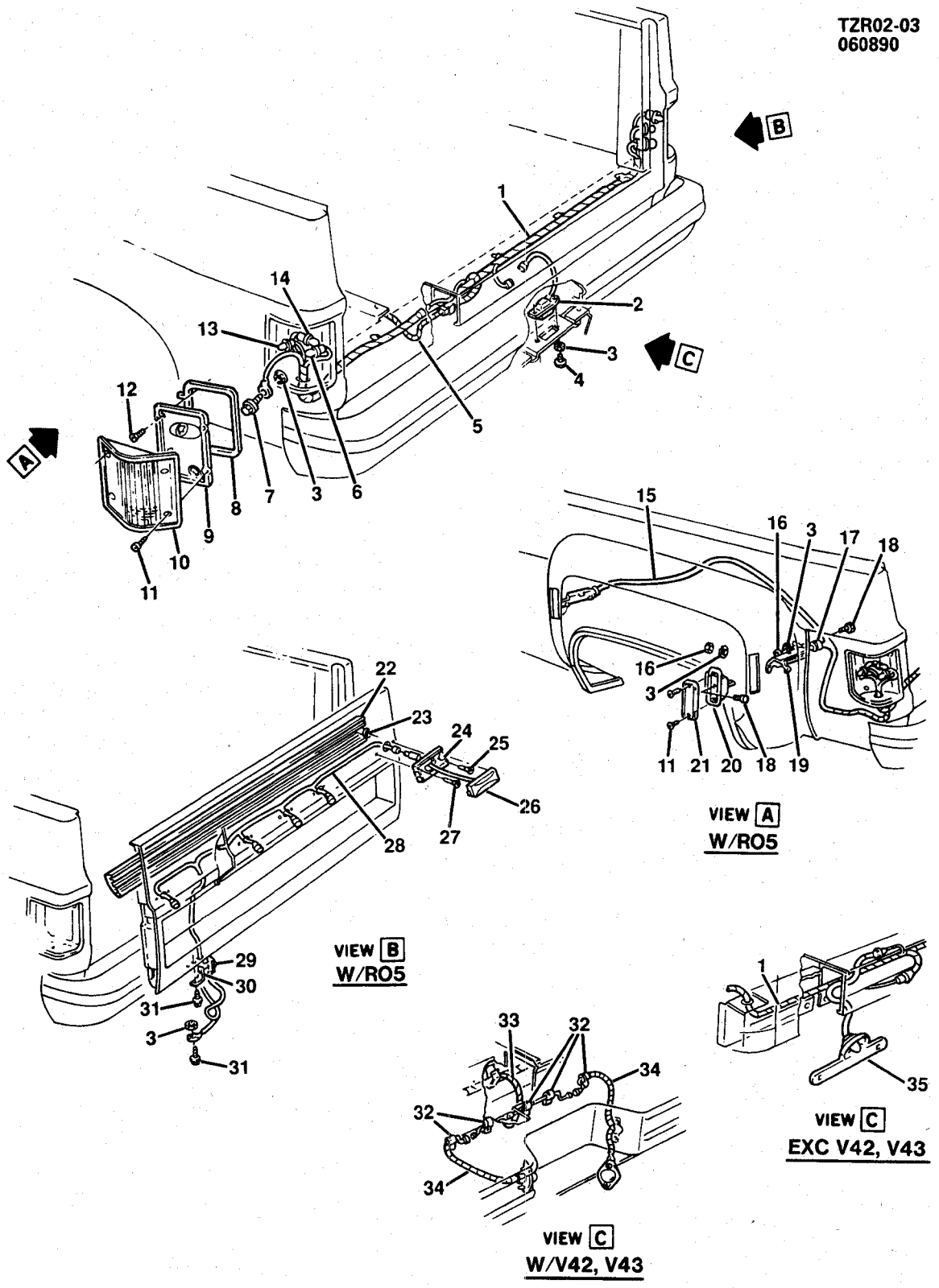

© 1990 GENERAL MOTORS SERVICE PARTS OPERATIONS—LIGHT TRUCK 52R

1985-1986 CK(03-43) LAMPS/REAR (W/FLEETSIDE/WIDESIDE PICKUP-BOX E63)

NOTE: R05 - WHEEL CONVERSION/DUAL REAR
NOTE: V42 - BUMPER, REAR STEP, CHROME
NOTE: V43 - BUMPER, REAR STEP, PAINTED
NOTE: B85 - BRIGHT BODY SIDE MOLDING W/DUAL CHROME ACCENT

ILL NO.	GROUP	DESCRIPTION	USAGE	QTY	PART NUMBER	PER VEH	PRICE EACH	PRICE EXT
1.	2.694	**HARNESS**, RR LP WRG (CK/RV 1, 2)(C/R 3 EXC R05)			12041757			
2.	2.700	**LAMP**, RR LIC (W/CHROME BPR) (INCL LENS, GASKET & SCREW)			917069			
	2.709	**LENS**, LIC PLT LP			5958467			
	2.707	**GASKET**, LIC PLT LP LENS			5955194			
3.	8.932	**WASHER**, EXTERNAL TOOTH LOCK (1/4, ZN)(AS REQD)			121753			
4.	8.977	**SCREW**, HWH (10-16X.62, ZN)(AS REQD)			9440025			
5.	2.694	**HARNESS**, RR LP WRG EXT (SEE CATALOG)						
6.	2.697	**SOCKET**, W/CABLE, B/U LP (2.596)			8909518			
	2.694	**BULB** (#1156)			9418866			
7.	8.977	**SCREW**, HWH (M6.3X1.81X13, PZOR)(AS REQD)			12338139			
8.	2.684	**GASKET**, RR COMB & SI MKR LP LENS			5965748			
9.	2.680	**HOUSING**, RR COMB & SI MKR LP-LH			5965771			
	2.680	**HOUSING**, RR COMB & SI MKR LP-RH			5965772			
10.	2.682	**LENS**, RR COMB & SI MKR LP-LH (EXC B85)			5965775			
	2.682	**LENS**, RR COMB & SI MKR LP-RH (EXC B85)			5965776			
	2.682	**LENS**, RR COMB & SI MKR LP-LH (W/B85)			5968329			
	2.682	**LENS**, RR COMB & SI MKR LP-RH (W/B85)			5968330			
11.	8.977	**SCREW**, PAN HD (M4.2X1.41X20) (AS REQD)			11504647			
12.	8.977	**SCREW**, PAN HD (8-18X.875)(AS REQD)						
13.	2.575	**SOCKET**, W/CABLE,SI MKR LP			6298886			
	8.991	**BULB** (#168)			9425542			
14.	2.679	**LAMP**, TAIL W/CABLE,REAR COMB LP			8914822			
	8.991	**BULB** (#2057)			9438848			
15.	2.694	**HARNESS**, RR LP WRG (CK3/RV3 W/R05)			12041758			
16.	8.915	**NUT**, HEX (1/4-20X.218, 286M ZOR)(AS REQD)			9439519			
17.	9.775	**GROMMET** (1.25X.50)			15591130			
18.	8.900	**BOLT**, HEX (1/4-20X3/4, 300M PHOS)			9425113			
19.	2.575	**SHIELD**, RR LP WRG HARN (W/R05)(4 REQD)			329830			
20.	2.575	**HOUSING**, R/FDR CLER LP (W/R05)			330492			
21.	2.575	**LAMP**, R/FDR (RED)(EXC B85)(2 REQD)			339885			
	2.575	**LAMP**, R/FDR (RED)(W/B85)(2 REQD)			339886			
	2.575	**LAMP**, R/FDR FRT (AMBER)(EXC B85)(2 REQD)			339887			
	2.575	**LAMP**, R/FDR FRT (AMBER) (W/B85)(2 REQD)			339888			
22.	2.530	**CONDUIT**, END GATE IDENT LP WIRE			329828			

© 1990 GENERAL MOTORS SERVICE PARTS OPERATIONS—LIGHT TRUCK 52R

23.	12.977	**CAP**, ENDGATE IDENT LP SCR (W/R05)(2 REQD)		4725264	____	____	____
24.	2.575	**LAMP**, END GATE IDENT (W/R05) (INCL #25)(5 REQD)		14040878	____	____	____
25.	8.977	**SCREW**, PAN HD (M4.2X1.41X30, PEOR)(AS REQD)		11505341	____	____	____
26.	2.575	**LENS**, W/BULB (PART OF #23) (W/R05)		14067520	____	____	____
27.	8.977	**SCREW**, OVAL HEAD (M4.2-1.41X25)(AS REQD)		11501167	____	____	____
28.	2.480	**HARNESS**, ENDGATE IDENT LP (W/R05)		12026081	____	____	____
29.	9.775	**GROMMET**, RF MKR LP & A.C. HARN		3661804	____	____	____
30.	2.559	**RETAINER**, END GATE IDENT LP WIRE		329831	____	____	____
31.	8.977	**SCREW**, HWH TAP (M4.2X1.41X16, PZOR)(AS REQD)		11509135	____	____	____
32.	4.686	**CLIP**, CUSHION (1/4X5/8)(AS REQD)		2058444	____	____	____
33.	2.714	**HARNESS**, RR LIC LP WRG (W/STEP BPR)		12012600	____	____	____
34.	2.700	**LAMP**, RR LIC (W/STEP BPR)(INCL LENS & GASKET)		918553	____	____	____
	2.709	**LENS**, LIC PLT LP		5947312	____	____	____
	2.707	**GASKET**, LIC PLT LP LENS		5954938	____	____	____
35.	2.700	**LAMP**, RR LIC PLT (EXC BPR)(INCL LENS GASKET & COVER)		916089	____	____	____
	2.709	**LENS**, LIC PLT LP		5949532	____	____	____
	2.707	**GASKET**, LIC PLT LP LENS CVR		5948767	____	____	____
	2.705	**COVER**, LIC PLT LP LENS		5950933	____	____	____

© 1990 GENERAL MOTORS SERVICE PARTS OPERATIONS—LIGHT TRUCK 52R

TZR02-04
070390

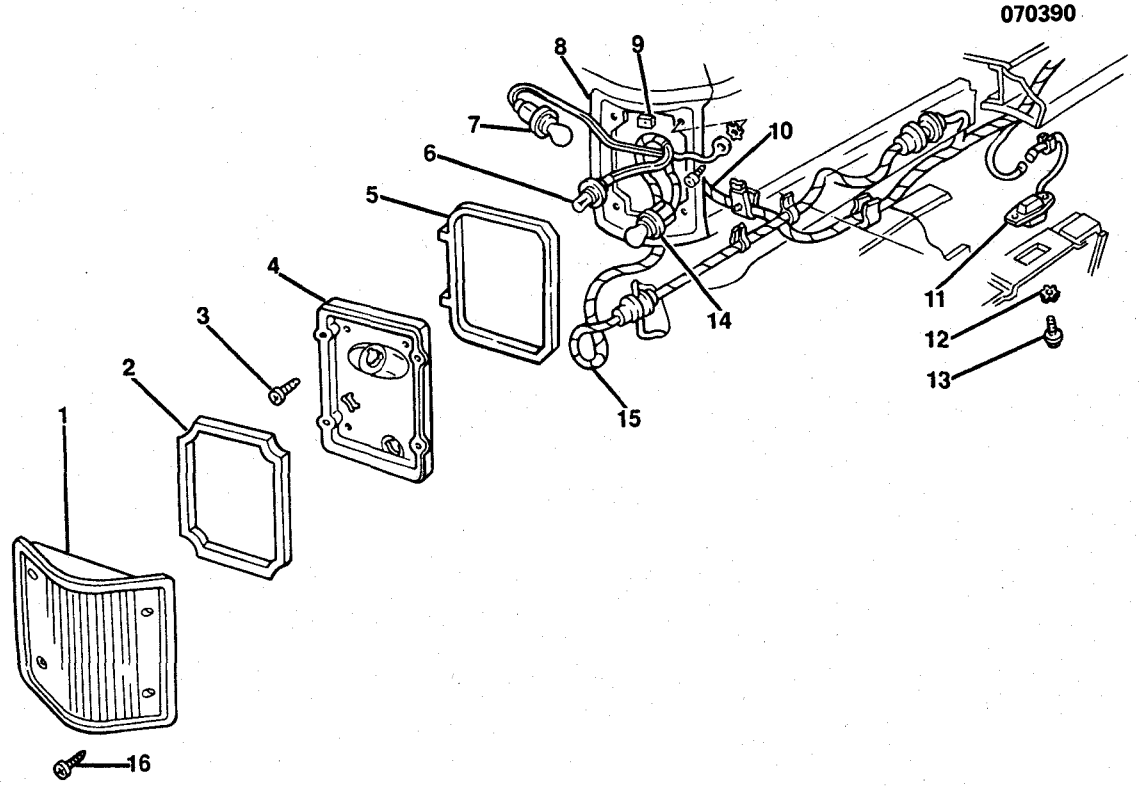

TZR02-04@

1985-1986 CK(06-16) LAMPS/REAR
1987-1991 RV(06-16) LAMPS/REAR

ILL NO.	GROUP	DESCRIPTION	USAGE	QTY	PART NUMBER	PER VEH	PRICE EACH	PRICE EXT
1.	2.682	**LENS**, RR COMB LP-LH (EXC BODY MLDGS)			5965775			
	2.682	**LENS**, RR COMB LP-RH (EXC BODY MLDGS)			5965776			
	2.682	**LENS**, RR COMB LP-LH W/BODY MLDGS			5968329			
	2.682	**LENS**, RR COMB LP-RH W/BODY MLDGS			5968330			
2.	2.684	**GASKET**, RR COMB LP LENS			5965748			
3.	8.977	**SCREW**, PAN HD C/R TAP (8-18X7/8)			9423131			
4.	2.680	**HOUSING**, RR COMB LP-LH			5965771			
	2.680	**HOUSING**, RR COMB LP-RH			5965772			
5.	2.660	**GASKET**, RR COMB LP (06)			329813			
6.	2.575	**SOCKET**, W/CABLE SI MKR LP			6298886			
7.	2.694	**SOCKET**, W/CABLE, T/SIG TAIL & STOP LP			8914822			
8.	2.660	**RETAINER**, RR LAMP-LH (06)			466715			
	2.660	**RETAINER**, RR LAMP-RH (06)			466716			
9.	8.921	**NUT**, U-SHAPE (M4.2X1.41, ZOR)			52351724			
10.	2.694	**HARNESS**, RR LP WRG EXT (SEE CATALOG)						
11.	2.700	**LAMP ASM**, LIC PLT (INCL LENS & GASKET)			917069			
	2.709	**LENS**, LIC PLT LP			5958467			
	2.707	**GASKET**, LIC PLT LP			5955194			
12.	8.932	**WASHER**, EXT TOOTH LK (1/4)			121753			

© 1990 GENERAL MOTORS SERVICE PARTS OPERATIONS—LIGHT TRUCK 52R

CONTINUED

13.	8.977	**SCREW**, HWH TAP (10-16X.62, ZN)	.....	9440025	____	____	____
14.	2.697	**SOCKET**, W/CABLE B/U LP (2.596)	.....	8909518	____	____	____
15.	2.694	**HARNESS**, RR LP WRG (06)	.....	12041760	____	____	____
	2.694	**HARNESS**, RR LP WRG (K16/V16)	.....	12041756	____	____	____
16.	8.977	**SCREW**, PAN HD TORX TAP (M4.2X1.41X20)	.....	11504647	____	____	____

© 1990 GENERAL MOTORS SERVICE PARTS OPERATIONS—LIGHT TRUCK 52R

TZR07-02
052290

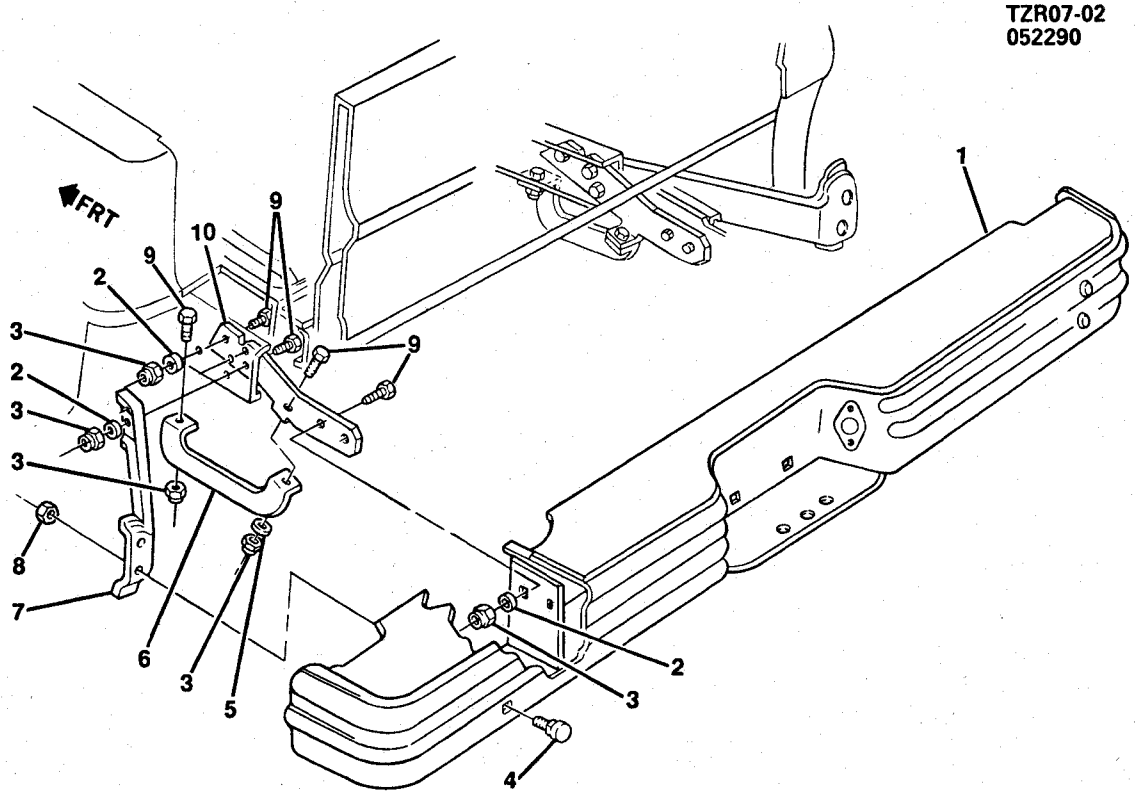

TZR07-02@

1985-1986 CK(03-43) BUMPER/REAR STEP
1987-1991 RV(03-43) BUMPER/REAR STEP

ILL NO.	GROUP	DESCRIPTION	USAGE	QTY	PART NUMBER	PER VEH	PRICE EACH	PRICE EXT
1.	7.831	**BAR**, REAR BUMPER IMPACT (CHROME)			14043836			
	7.831	**BAR**, RR BPR IMP (PAINTED) (W/STEPSIDE E62)(1985-87)			14043837			
	7.831	**BAR**, RR BPR IMP (PAINTED) (W/FLEETSIDE E63)			14043838			
2.	8.931	**WASHER**, SPRING LOCK (.50X.87 ZOR)			9439514			
3.	8.917	**NUT**, HEX LOCK (1/2-13 301M CAD)			9422301			
4.	8.903	**BOLT**, ROUND HEAD SQUARE SHANK (1/2-13X2)			340734			
5.	8.929	**WASHER**, PLAIN (.531 CZ)			120396			
6.	7.831	**REINFORCEMENT**, REAR BUMPER INNER BRACE-LH			14014797			
	7.831	**REINFORCEMENT**, REAR BUMPER INNER BRACE-RH			14014798			
7.	7.836	**BRACE**, REAR BUMPER OUTER-LH			14014799			
	7.836	**BRACE**, REAR BUMPER OUTER-RH			14014800			
8.	7.831	**NUT**, REAR BUMPER IMPACT BAR (1/2-13X.44,1.03 PX)			9442090			
9.	8.900	**BOLT**, SPL (1/2-13X1.50 PC)			9422332			
10.	7.836	**BRACE**, REAR BUMPER INNER-LH			14014793			
	7.836	**BRACE**, REAR BUMPER INNER-RH			14014794			

© 1990 GENERAL MOTORS SERVICE PARTS OPERATIONS—LIGHT TRUCK 52R

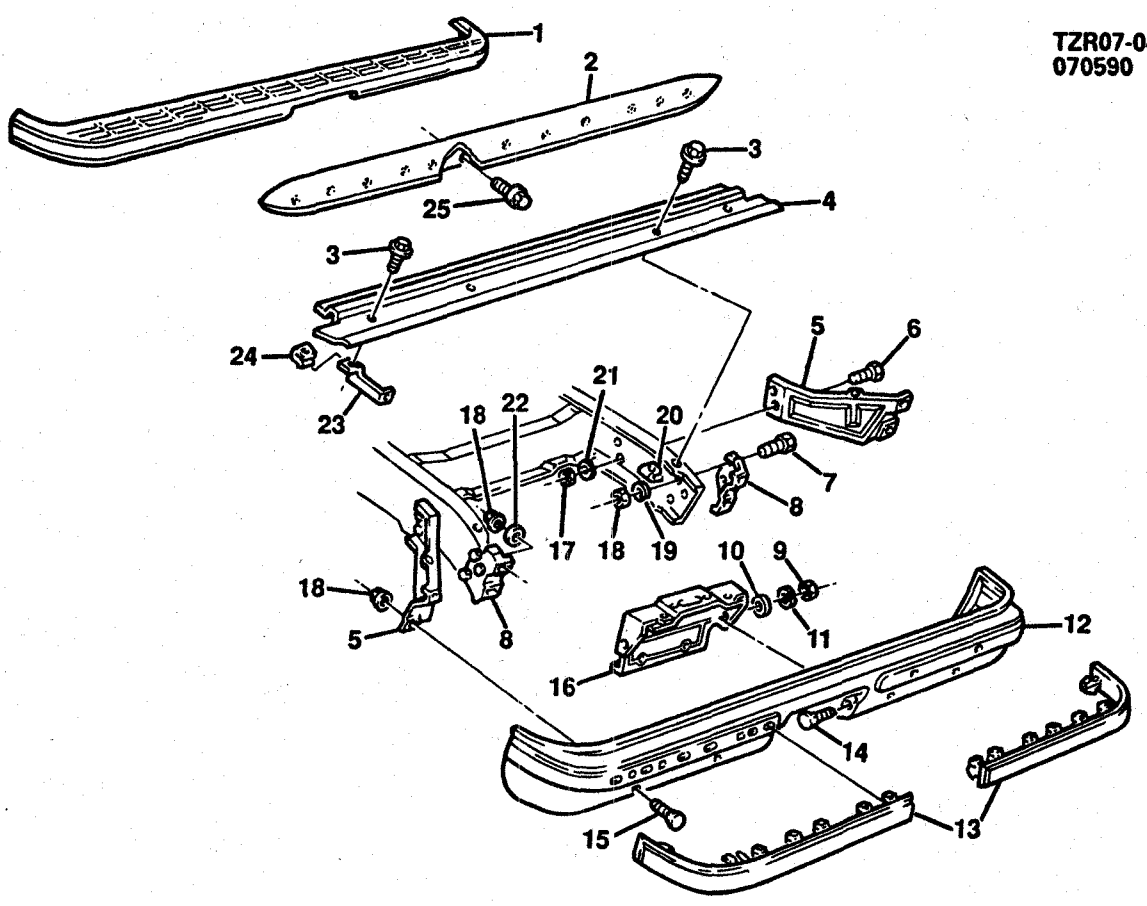

TZR07-04@

1985-1986 CK(06-16) BUMPER/REAR
1987-1991 RV(06-16) BUMPER/REAR

ILL NO.	GROUP	DESCRIPTION	USAGE	QTY	PART NUMBER	PER VEH	PRICE EACH	PRICE EXT
1.	7.831	**STRIP**, RR BPR RUB (RV 06) (W/VG5)(1989-91)			15571637			
2.	7.833	**SHIELD**, PROTECTIVE (CK/RV 06)			14022883			
	7.833	**FILLER**, RR BPR (CK/RV 06)(1989-91)			15610507			
3.	8.900	**SCREW**, HEX W/CON WA (5/16-18X7/8)			473892			
4.	7.833	**DEFLECTOR**, GRAVEL (K/R 16) (1985-88)			329138			
	7.833	**FILLER**, RR BPR			15614122			
5.	7.836	**BRACE**, BAR OUTER-LH			14067783			
	7.836	**BRACE**, BAR OUTER-RH			14067784			
6.	8.900	**BOLT**, HEX (7/16-14X1 1/4)			9424069			
7.	8.900	**BOLT**, HEX (1/2-13X1.25, 300M)			9425082			
8.	7.836	**BRACE**, BAR INNER-LH (K/V 16)			14021357			

© 1990 GENERAL MOTORS SERVICE PARTS OPERATIONS—LIGHT TRUCK 52R

CONTINUED

8.	7.836	**BRACE**, BAR INNER-RH (K/V 16)	.....	14021358	___	___	___
	7.836	**BRACE**, BAR INNER-LH (CK/RV 06)	.....	14021359	___	___	___
	7.836	**BRACE**, BAR INNER-RH (CK/RV 06)	.....	14021360	___	___	___
9.	8.915	**NUT**, HEX (3/8X16X21/64, 301 ZN)	.....	9414034	___	___	___
10.	8.929	**WASHER**, FLAT (15/32X15/16X1/16, ZP)	.....	120395	___	___	___
11.	8.931	**WASHER**, SPR LK (3/8X11/16, ZOR)	.....	9439512	___	___	___
12.	7.831	**BAR**, BUMPER (CHROME)(EXC STRIP)	.....	14021280	___	___	___
	7.831	**BAR**, BUMPER (CHROME) (W/STRIP)	.....	14026495	___	___	___
	7.831	**BAR**, BUMPER (W/RR STRIP IMP BPR VG5)(1989-91)	.....	15628731	___	___	___
13.	7.831	**STRIP**, OUTER-LH	.....	14026499	___	___	___
	7.831	**STRIP**, OUTER-RH	.....	14026500	___	___	___
14.	8.903	**BOLT**, RD HD SQ NK (3/8-16X1)	.....	9433489	___	___	___
15.	8.903	**BOLT**, RD HD SQ NK (.500-13X2) (*1)	.....	340734	___	___	___
	7.831	**BOLT**, IMP BAR (1/2-13X1)(*2)	.....	9442091	___	___	___
16.	7.800	**BRACKET**, REAR LIC PLT	.....	14043845	___	___	___
17.	8.915	**NUT**, HEX (1/2-13, CZ)	.....	9414511	___	___	___
18.	8.915	**NUT**, HEX (1/2-13X.44)	.....	9442090	___	___	___
19.	8.931	**WASHER**, SPR LK (.50X.87, ZOR)	.....	9439514	___	___	___
20.	8.915	**NUT**, HFH (5/16-18X.20, 286M)	.....	1359887	___	___	___
	8.932	**WASHER**, EXT TTH LK (.375, CAD OR ZC)	.....	138489	___	___	___
21.	8.931	**WASHER**, SPR LK (3/8X11/16, ZOR)	.....	9439512	___	___	___
22.	8.929	**WASHER**, PLAIN (.531, CZ)	.....	120396	___	___	___
23.	7.833	**BRACKET**, GVL DFL-LH (K/V1 16)	.....	337707	___	___	___
	7.833	**BRACKET**, GVL DFL-RH (K/V1 16)	.....	337708	___	___	___
24.	8.921	**NUT**, "U" (5/16-18)	.....	10008002	___	___	___
25.	8.977	**SCREW**, HEX W/FLAT WA (M6.3X1.81X16, PZOR)	.....	11509371	___	___	___

NOTE 1: USED IN ALL POSITIONS EXCEPT UNDER IMPACT STRIP, ON BUMPERS SO EQUIPPED.
NOTE 2: USED UNDER IMPACT STRIP ON BUMPERS SO EQUIPPED.

© 1990 GENERAL MOTORS SERVICE PARTS OPERATIONS—LIGHT TRUCK 52R

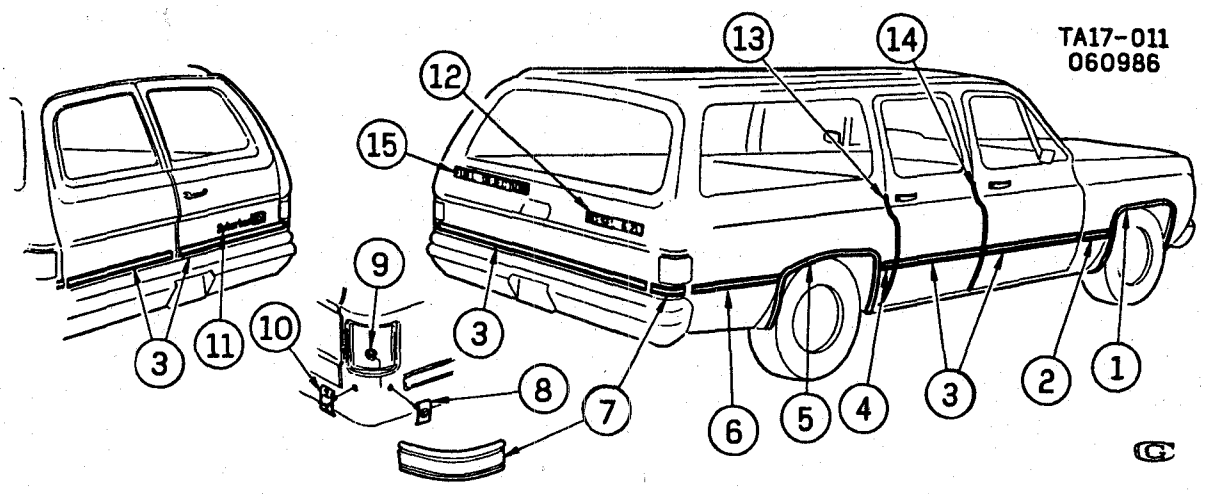

TA17-011@

1985-1986 CK(06) MOLDINGS

NOTE: B84 MOLDINGS HAVE A BLACK CENTER, B85 MOLDINGS HAVE BRIGHT CENTER.

ILL NO.	GROUP	DESCRIPTION	USAGE	QTY	PART NUMBER	PER VEH	PRICE EACH	PRICE EXT
1.	8.132	MOLDING, F/FDR WHL OPG-LH			14022805			
	8.132	MOLDING, F/FDR WHL OPG-RH			14022806			
2.	8.132	MOLDING, F/FDR SI LWR RR-LH (B84)			15596905			
	8.132	MOLDING, F/FDR SI LWR RR-RH (B84)			15596906			
	8.132	MOLDING, F/FDR SI LWR RR-LH (B85)			15596907			
	8.132	MOLDING, F/FDR SI LWR RR-RH (B85)			15596908			
3.	17.215	MOLDING, F/D, R/D, F/D, T/GATE (B84)(66.4" LONG CUT AS REQ)			15596953			
	17.215	MOLDING, F/D, R/D, F/D, T/GATE (B85)(66.4" LONG CUT AS REQ)			15596954			
4.	17.507	MOLDING, BODY SI LWR FRT-LH (B84)			15596919			
	17.507	MOLDING, BODY SI LWR FRT-RH (B84)			15596920			
	17.507	MOLDING, BODY SI LWR FRT-LH (B85)			15596921			
	17.507	MOLDING, BODY SI LWR FRT-RH (B85)			15596922			
5.	17.507	MOLDING, SI PNL WHL OPG-LH			6273599			
	17.507	MOLDING, SI PNL WHL OPG-RH			6273600			
6.	17.507	MOLDING, BODY SI LWR RR-LH (B84)			15596927			
	17.507	MOLDING, BODY SI LWR RR-RH (B84)			15596928			
	17.507	MOLDING, BODY SI LWR RR-LH (B85)			15596929			
	17.507	MOLDING, BODY SI LWR RR-RH (B85)			15596930			
7.	17.507	MOLDING, BODY SI LWR RR COR-LH (B84)			15549301			

© 1990 GENERAL MOTORS SERVICE PARTS OPERATIONS—LIGHT TRUCK 52R

CONTINUED

7.	17.507	**MOLDING**, BODY SI LWR RR COR-RH (B84)	15549302	___	___	___
	17.507	**MOLDING**, BODY SI LWR RR COR-LH (B85)	15549303	___	___	___
	17.507	**MOLDING**, BODY SI LWR RR COR-RH (B85)	15549304	___	___	___
8.	17.507	**RETAINER**, RR COR LWR MLDG RR	14022856	___	___	___
9.	8.921	**NUT**, STMPD W/SLR (#10-24, ZC)	9426926	___	___	___
10.	17.507	**RETAINER**, RR COR LWR MLDG SI	14018564	___	___	___
11.	17.215	**PLATE**, BODY RR NAME (GMC) "SUBURBAN"	14016615	___	___	___
	17.215	**PLATE**, BODY RR NAME (CHEV) "SUBURBAN"	14016626	___	___	___
	17.215	**PLATE**, RR DR(GMC)	15616908	___	___	___
12.	17.215	**PLATE**, T/GATE OR BACK DR NAME "DIESEL 6.2L"	14043698	___	___	___
13.	16.445	**GUARD**, RR DR EDGE-LH	14072891	___	___	___
	16.445	**GUARD**, RR DR EDGE-RH	14072892	___	___	___
14.	16.445	**GUARD**, FRT DR EDGE-LH	14072891	___	___	___
	16.445	**GUARD**, FRT DR EDGE-RH	14072892	___	___	___
15.	17.215	**EMBLEM**, BODY "FUEL INJECTION"	15554973	___	___	___

© 1990 GENERAL MOTORS SERVICE PARTS OPERATIONS—LIGHT TRUCK 52R

TZR17-01
062790

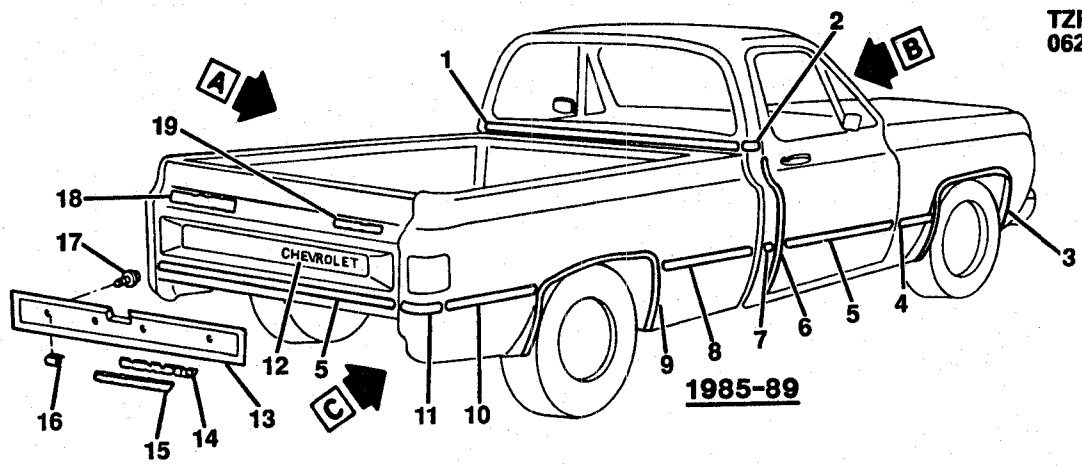

1985-89

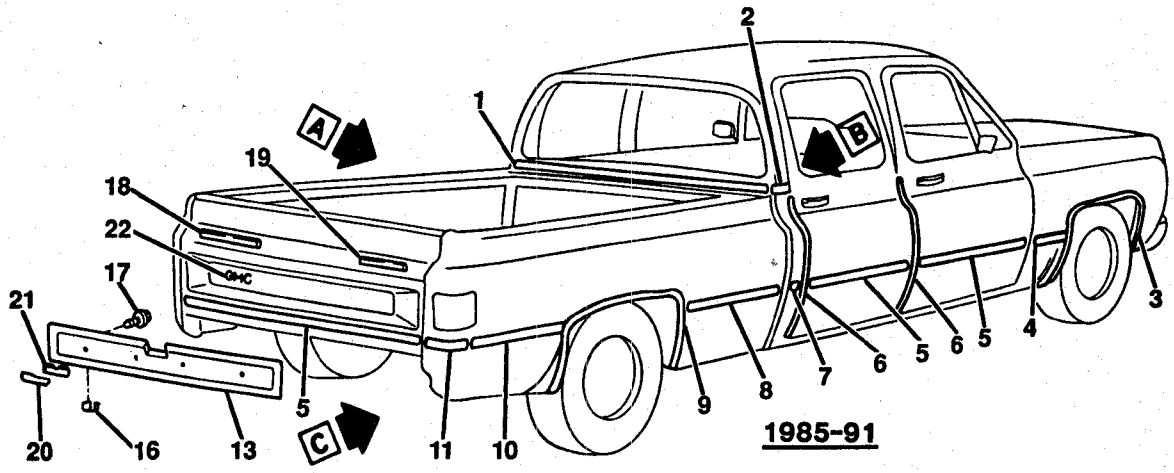

1985-91

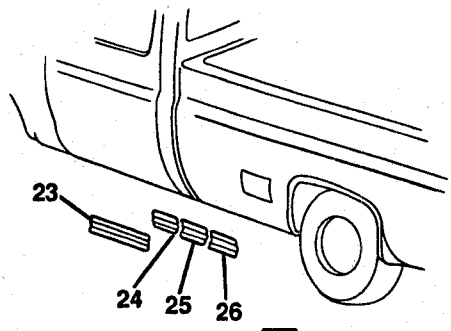

VIEW A

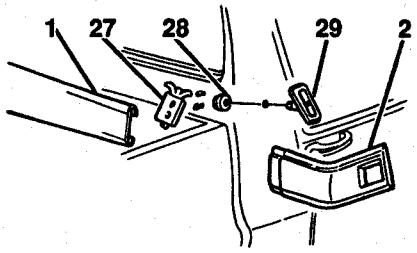

VIEW B
1985-88

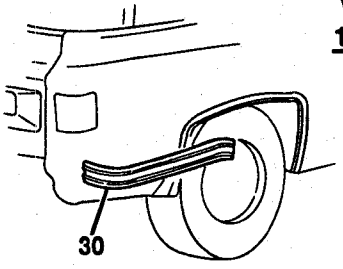

VIEW C

TZR17-01@

© 1990 GENERAL MOTORS SERVICE PARTS OPERATIONS—LIGHT TRUCK 52R

1985-1986 CK(03-43) MOLDINGS
1987-1991 RV(03-43) MOLDINGS

NOTE: B84-ORNAMENTATION/EXTRA MLDG BODY SIDE.
NOTE: B85-ORNAMENTATION/EXTRA MLDG BELT REVEAL.
NOTE: BX6-ORNAMENTATION/EXTRA MLDG APLQ CAB BACK PNL.
NOTE: E62-EQUIPMENT/STEPSIDE PICKUP BOX.
NOTE: E63-EQUIPMENT/FLEETSIDE PICKUP BOX.
NOTE: B84 MOLDINGS HAVE BLACK CENTER, B85 MOLDINGS HAVE BRIGHT CENTER.

ILL NO.	GROUP	DESCRIPTION	USAGE	QTY	PART NUMBER	PER VEH	PRICE EACH	PRICE EXT
1.	17.507	**MOLDING**, BODY RR UPR (W/BX6) (1985-88)			14027354			
2.	17.507	**MOLDING**, BDY RR OTR PNL UPR-LH (BOW TIE)(INCL #28,29) (1985-88)			14029979			
	17.507	**MOLDING**, BDY RR OTR PNL UPR-RH (BOW TIE)(INCL #28,29) (1985-88)			14029980			
	17.507	**MOLDING**, BDY RR OTR PNL UPR-LH (GMC)(INCL #28,29) (1985-88)			14029981			
	17.507	**MOLDING**, BDY RR OTR PNL UPR-RH (GMC)(INCL #28,29) (1985-88)			14029982			
	17.507	**MOLDING**, BDY RR OTR PNL UPR-LH (CAMPER)(INCL #28,29) (1985-88)			14029983			
	17.507	**MOLDING**, BDY RR OTR PNL UPR-RH (CAMPER)(INCL #28,29) (1985-88)			14029984			
3.	8.132	**MOLDING**, F/FDR WHL OPG-LH			14022805			
	8.132	**MOLDING**, F/FDR WHL OPG-RH			14022806			
4.	8.132	**MOLDING**, F/FDR SI LWR RR-LH (B84)(1985-88)			15596905			
	8.132	**MOLDING**, F/FDR SI LWR RR-RH (B84)(1985-88)			15596906			
	8.132	**MOLDING**, F/FDR SI LWR RR-LH (B85)(1989-91)			15596907			
	8.132	**MOLDING**, F/FDR SI LWR RR-RH (B85)(1989-91)			15596908			
5.	17.215	**MOLDING**, F/D, R/D, T/GATE (B84) (*1)			15596953			
	17.215	**MOLDING**, F/D, R/D, T/GATE (B85) (*1)			15596954			
6.	21.445	**MOLDING**, DR EDGE GUARD (1985-86)			995118			
	16.445	**GUARD**, F/D, R/D EDGE-LH			14072891			
	16.445	**GUARD**, F/D, R/D EDGE-RH			14072892			
7.	17.507	**MOLDING**, BODY SI (B84)(1985-87)(*2)			15596935			
	17.507	**MOLDING**, BODY SI (B85)(1988-91)(*2)			15596939			
8.	17.507	**MOLDING**, PUBX SI FRT-RH (6.5' BOX)(B84)(1985-87)			15596936			
	17.507	**MOLDING**, PUBX SI FRT-RH (6.5' BOX)(B85)(1985-87)			15596942			
	17.507	**MOLDING**, PUBX SI FRT-RH (8' BOX)(B84)(1987-88)			15596938			
	17.507	**MOLDING**, PUBX SI FRT-RH (8' BOX)(B85)			15596942			
9.	17.507	**MOLDING**, RR WHL OPG-LH			6273599			
	17.507	**MOLDING**, RR WHL OPG-RH			6273600			
10.	17.507	**MOLDING**, PUBX SI RR-LH (6.5' BOX)(B84)(1985-87)			15596931			
	17.507	**MOLDING**, PUBX SI RR-RH (6.5' BOX)(B84)(1985-87)			15596932			
	17.507	**MOLDING**, PUBX SI RR-LH (6.5' BOX)(B85)(1985-87)			15596957			
	17.507	**MOLDING**, PUBX SI RR-RH (6.5' BOX)(B85)(1985-87)			15596934			

© 1990 GENERAL MOTORS SERVICE PARTS OPERATIONS—LIGHT TRUCK 52R

10.	17.507	**MOLDING**, PUBX SI RR-LH (8' BOX)(B84)(1985-87)		15596955	___	___	___
	17.507	**MOLDING**, PUBX SI RR-RH (8' BOX)(B84)(1985-87)		15596956	___	___	___
	17.507	**MOLDING**, PUBX SI RR-LH (8' BOX)(B85)(1985-91)		15596957	___	___	___
	17.507	**MOLDING**, PUBX SI RR-RH (8' BOX)(B85)(1985-91)		15596958	___	___	___
11.	17.507	**MOLDING**, PUBX SI RR COR-LH (B84)(1985-88)		14027593	___	___	___
	17.507	**MOLDING**, PUBX SI RR COR-RH (B84)(1985-88)		14027594	___	___	___
	17.507	**MOLDING**, PUBX SI RR COR-LH (B85)(1985-91)		14027597	___	___	___
	17.507	**MOLDING**, PUBX SI RR COR-RH (B85)(1985-91)		14027598	___	___	___
	17.507	**RETAINER**, PUBX SI RR MLDG		14018564	___	___	___
	17.507	**RETAINER**, RR CORNER LWR MLDG (1985-87)		14022856	___	___	___
	17.507	**SPACER**, RR CORNER MLDG SI (1987-88)		15606343	___	___	___
	17.507	**RETAINER**, RR CORNER MLDG RR (1988-89)		3917954	___	___	___
	8.977	**SCREW**, FL HD C/R TAP (4X24X3/8)		4492963	___	___	___
12.	17.215	**DECAL**, T/GATE "CHEV" (WHITE) (W/E62)(1985-87)		15598771	___	___	___
	17.215	**DECAL**, T/GATE "CHEV" (BLACK) (W/E62)(1985-87)		15598772	___	___	___
	17.215	**DECAL**, T/GATE "CHEV" (WHITE) (W/E63)(1988-91)		15598775	___	___	___
	17.215	**DECAL**, T/GATE "CHEV" (BLACK) (W/E63)(1988-91)		15598776	___	___	___
13.	17.215	**PANEL**, T/GATE TR (CHEV)(INCL #14,15)		14027521	___	___	___
	17.215	**PANEL**, T/GATE TRIM (GMC)(INCL #20,21)(1985-88)		14027522	___	___	___
	17.215	**PANEL**, E/GATE EXTR TR (GMC) (1989-91)		15616913	___	___	___
14.	17.215	**GASKET**, T/GATE NM PLT (CHEV) (1985-90)		14051874	___	___	___
15.	17.215	**PLATE**, T/GATE NM (CHEV)(1985-90)		14027523	___	___	___
16.	8.921	**NUT**, U-SHAPE (M6.3X1.81)		11509582	___	___	___
17.	8.977	**SCREW**, PAN HD TORX (M6.3X1.81X25)		11504649	___	___	___
18.	17.215	**EMBLEM**, BODY "FUEL INJECTION" (1987-88)		15554973	___	___	___
19.	17.215	**PLATE**, "DIESEL 6.2L" NAME (1985-88)		14043698	___	___	___
20.	17.215	**PLATE**, T/GATE TRIM PNL NAME (GMC)(1985-88)		14027524	___	___	___
21.	17.215	**GASKET**, T/GATE TRIM PNL NAME PLT (GMC)(1985-88)		14051875	___	___	___
22.	17.215	**DECAL**, T/GATE "GMC" (WHITE) (W/E62)(1985-87)		15598773	___	___	___
	17.215	**DECAL**, T/GATE "GMC" (BLACK) (W/E62)(1985-87)		15598774	___	___	___
	17.215	**DECAL**, T/GATE "GMC" (WHITE) (W/E63)(1985-91)		15598777	___	___	___
	17.215	**DECAL**, T/GATE "GMC" (BLACK) (W/E63)(1985-91)		15598778	___	___	___
23.	17.507	**MOLDING**, BODY SI (B84)(8' BOX) (1985-87)(*3)		15596935	___	___	___
	17.507	**MOLDING**, BODY SI (B85)(8' BOX) (1985-91)(*3)		15596939	___	___	___
24.	17.507	**MOLDING**, BODY SI (B84)(6.5' BOX)(1985-87)(*2,3)		15596935	___	___	___
	17.507	**MOLDING**, BODY SI (B85)(6.5' BOX)(1985-90)(*2,3)		15596939	___	___	___
25.	17.507	**MOLDING**, FUEL TANK FILLER DOOR (B84)(1985-87)(*2,3)		15596935	___	___	___
	17.507	**MOLDING**, FUEL TANK FILLER DOOR (B85)(1985-86)(*2,3)		15596939	___	___	___

© 1990 GENERAL MOTORS SERVICE PARTS OPERATIONS—LIGHT TRUCK 52R

CONTINUED

26.	17.507	**MOLDING**, BODY SI-LH (B84) (1985-87)		15596943	____	____	____
	17.507	**MOLDING**, BODY SI-RH (B84) (1985-87)		15596938	____	____	____
	17.507	**MOLDING**, BODY SI-LH (B85) (1988-91)		15596945	____	____	____
	17.507	**MOLDING**, BODY SI-RH (B85) (1988-91)		15596946	____	____	____
27.	17.507	**RETAINER**, BODY RR MLDG (1985-88)		14027379	____	____	____
28.	8.921	**NUT**, STMP (#10-24X1/2 FLG OD)		9426926	____	____	____
29.	17.507	**RETAINER**, BODY SI UPR MLDG (1985-88)		14027378	____	____	____
30.	N.S.	**MOLDING**, (RET TYPE NOT SERVICED, USE MLDGS #10,11)			____	____	____

NOTE 1: NUMBERS LISTED ARE EXACT LENGTH (66.4") FOR T/GATE APPLICATION, MUST BE ORDERED & CUT TO LENGTH FOR FRT & RR DOOR APPLICATION.
NOTE 2: NUMBERS LISTED ARE 20.24" LONG & MUST BE ODERED & CUT TO LENGTH FOR THESE POSITIONS.
NOTE 3: USED ALSO ON RH SIDE WITH DUAL TANK OPTION (NL2).

© 1990 GENERAL MOTORS SERVICE PARTS OPERATIONS—LIGHT TRUCK 52R

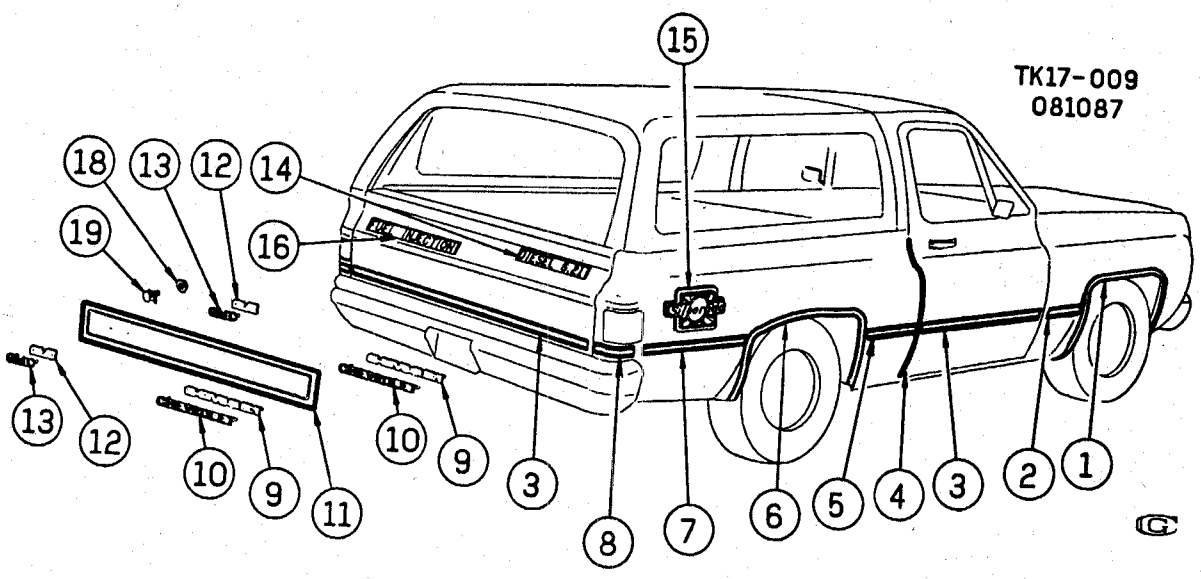

TK17-009@

© 1990 GENERAL MOTORS SERVICE PARTS OPERATIONS—LIGHT TRUCK 52R

1985-1986 K(16) MOLDINGS
1987-1988 V(16) MOLDINGS

NOTE: B84 MOLDINGS HAVE BLACK CENTER, B85 MOLDINGS HAVE BRIGHT CENTER.

ILL NO.	GROUP	DESCRIPTION	USAGE	QTY	PART NUMBER	PER VEH	PRICE EACH	PRICE EXT
1.	8.132	**MOLDING**, F/FDR WHL OPG-LH			14022805			
	8.132	**MOLDING**, F/FDR WHL OPG-RH			14022806			
2.	8.132	**MOLDING**, F/FDR SI LWR RR-LH (B84)(1985-88)			15596905			
	8.132	**MOLDING**, F/FDR SI LWR RR-RH (B84)(1985-88)			15596906			
	8.132	**MOLDING**, F/FDR SI LWR RR-LH (B85)			15596907			
	8.132	**MOLDING**, FRT FDR LWR RR-LH (B85)			15628787			
	8.132	**MOLDING**, F/FDR SI LWR RR-RH (B85)			15596908			
	8.132	**MOLDING**, FRT FDR LWR RR-RH (B85)			15628788			
3.	17.215	**MOLDING**, T/GATE & F/D LWR (B84)(1985-88)(*1)			15596953			
	17.215	**MOLDING**, T/GATE & F/D LWR (B85)(1985-88)(*1)			15596954			
	17.215	**MOLDING**, E/GATE LWR (W/B85) (1989)(*1)			15568977			
4.	16.445	**GUARD**, F/D EDGE-LH (1985-88)			14072891			
	16.445	**GUARD**, F/D EDGE-RH (1985-88)			14072892			
	16.445	**GUARD**, DR EDGE (B85,B93)(1989)			15641889			
5.	17.507	**MOLDING**, BODY SI LWR FRT-LH (B84)(1985-88)			15596923			
	17.507	**MOLDING**, BODY SI LWR FRT-RH (B84)(1985-88)			15596938			
	17.507	**MOLDING**, BODY SI LWR FRT-LH (B85)(1985-88)			15596925			
	17.507	**MOLDING**, BODY SI LWR FRT-LH (B85)(1989)			15628789			
	17.507	**MOLDING**, BODY SI LWR FRT-RH (B85)(1985-88)			15596926			
	17.507	**MOLDING**, BODY SI LWR FRT-RH (B85)(1989)			15628790			
6.	17.507	**MOLDING**, SI PNL WHL OPG-LH			6273599			
	17.507	**MOLDING**, SI PNL WHL OPG-RH			6273600			
7.	17.507	**MOLDING**, BODY SI LWR RR-LH (B84)(1985-88)			15596931			
	17.507	**MOLDING**, BODY SI LWR RR-RH (B84)(1985-88)			15596932			
	17.507	**MOLDING**, BODY SI LWR RR-LH (B85)(1985-88)			15596957			
	17.507	**MOLDING**, BODY SI LWR RR-LH (B85)(1989)			15628793			
	17.507	**MOLDING**, BODY SI LWR RR-RH (B85)(1985-88)			15596934			
	17.507	**MOLDING**, BODY SI LWR RR-RH (B85)(1989)			15628794			
8.	17.507	**MOLDING**, BODY SI LWR RR CORNER-LH (B84)(1985-88)			14027593			
	17.507	**MOLDING**, BODY SI LWR RR CORNER-RH (B84)(1985-88)			14027594			
	17.507	**MOLDING**, BODY SI LWR RR CORNER-LH (B85)			14027597			
	17.507	**MOLDING**, BODY SI LWR RR CORNER-RH (B85)			14027598			
	17.507	**RETAINER**, RR CORNER LWR MLDG (SIDE POSITION)			14018564			
	17.507	**RETAINER**, RR CORNER LWR MLDG (REAR POSITION)			14022856			
9.	17.215	**GASKET**, T/GATE NAME PLT (CHEV)			14051874			

© 1990 GENERAL MOTORS SERVICE PARTS OPERATIONS—LIGHT TRUCK 52R

10.	17.215	**PLATE**, T/GATE NAME "CHEVROLET"		14027523	___	___	___
11.	17.215	**PANEL**, T/GATE TRIM (CHEV) (1985-88)		14027525	___	___	___
	17.215	**PANEL KIT**, T/GATE TRIM (CHEV) (1989)		15616912	___	___	___
	17.215	**PANEL**, T/GATE TRIM (GMC)(1985-88)		14027526	___	___	___
	17.215	**PANEL KIT**, T/GATE TRIM (GMC) (1989)		15616911	___	___	___
12.	17.215	**GASKET**, T/GATE NAME PLT (GMC)		14051875	___	___	___
13.	17.215	**PLATE**, T/GATE NAME "GMC"		14027524	___	___	___
14.	17.215	**PLATE**, T/GATE NAME "DIESEL 6.2L"		14043698	___	___	___
15.	17.507	**PLATE**, BODY RR NAME (CHEV) "SILVERADO" (K/V)		14014315	___	___	___
	17.507	**PLATE**, BODY RR NAME (GMC) "SIERRA CLASSIC" (K/V)		14013796	___	___	___
16.	17.215	**EMBLEM**, BODY RR "FUEL INJECTION" (87-88)		15554973	___	___	___
18.	8.921	**NUT**, STAMPED (#10-24, ZC)		9426926	___	___	___
19.	17.215	**BOLT**, END GATE TR PNL		331640	___	___	___

NOTE 1: STRIPE IS EXACT LENGTH FOR T/GATE APPLICATION, CUT AS REQUIRED FOR FRT DOOR APPLICATION.

© 1990 GENERAL MOTORS SERVICE PARTS OPERATIONS—LIGHT TRUCK 52R

TR17-032
120288

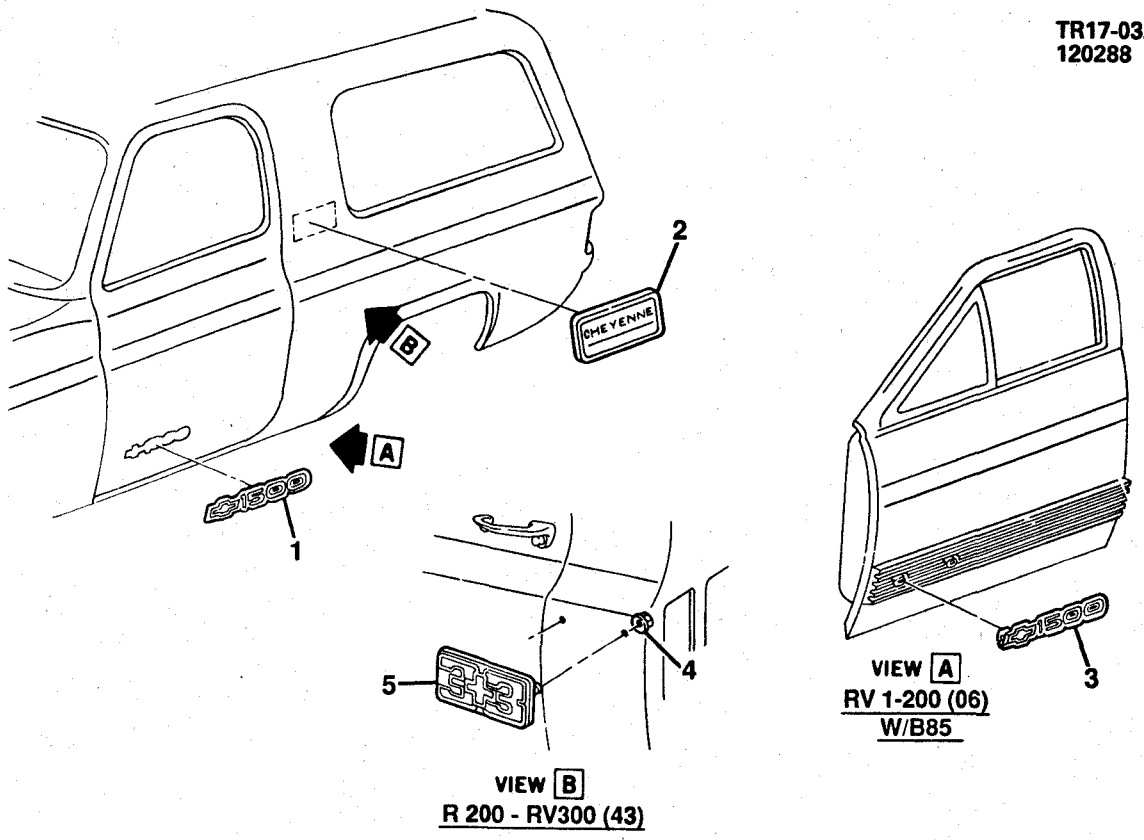

TR17-032@

1989-1991 RV MOLDINGS (NAME PLATES/SIDE)

ILL NO.	GROUP	DESCRIPTION	USAGE	QTY	PART NUMBER	PER VEH	PRICE EACH	PRICE EXT
1.	17.507	**PLATE**, SI F/D NAME (GMC 1500)	.....		15551232	____	____	____
	17.507	**PLATE**, SI F/D NAME (CHEV) ("BOWTIE" 1500)	.....		15551230	____	____	____
2.	17.507	**PLATE**, BODY SI NAME (CHEYENNE)	.....		15569576	____	____	____
3.	17.507	**PLATE**, SI F/D NAME (1500) (W/MLDG)	.....		15551233	____	____	____
4.	8.921	**NUT**, MET SKW (M5X15 FLG PHOS)	.....		11501047	____	____	____
5.	17.507	**PLATE**, BODY SI NA (3±3)	.....		15607847	____	____	____

TZR17-03
062890

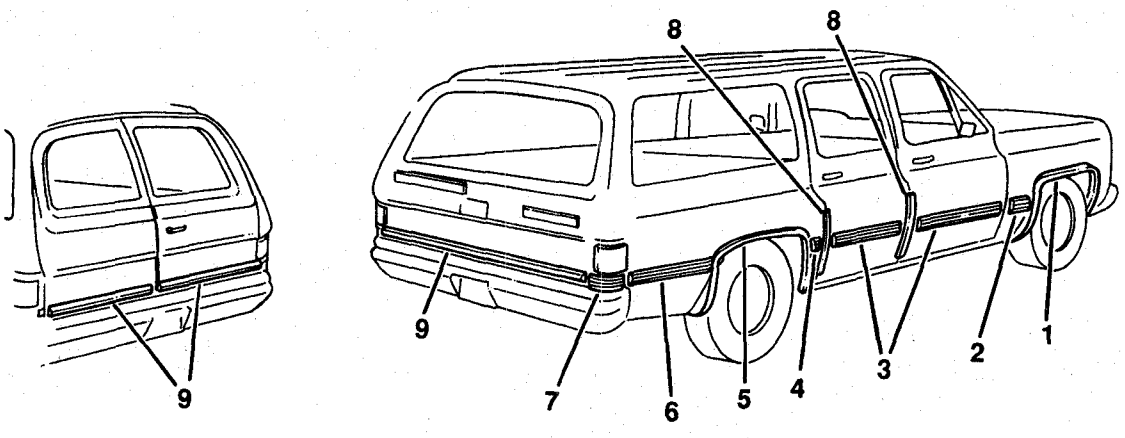

TZR17-03@

1989-1991 RV(06) MOLDINGS (W/B85,B93,B96)

ILL NO.	GROUP	DESCRIPTION	USAGE	QTY	PART NUMBER	PER VEH	PRICE EACH	PRICE EXT
1.	8.132	**MOLDING KIT**, FRT FDR WHL HSG-LH (W/B96)			15616313			
	8.132	**MOLDING KIT**, FRT FDR WHL HSG-RH (W/B96)			15616312			
2.	8.132	**MOLDING**, FRT FDR LWR RR-LH (W/B85)			15628787			
	8.132	**MOLDING**, FRT FDR LWR RR-RH (W/B85)			15628788			
3.	17.507	**MOLDING**, SI F/D LWR-LH (W/B85)			15565467			
	17.507	**MOLDING**, SI F/D LWR-RH (W/B85)			15565468			
	17.507	**MOLDING**, SI R/D LWR-LH (W/B85)			15571415			
	17.507	**MOLDING**, SI R/D LWR-RH (W/B85)			15571416			
4.	17.507	**MOLDING**, BODY SI LWR FRT-LH (W/B85)			15628789			
	17.507	**MOLDING**, BODY SI LWR FRT-RH (W/B85)			15628790			

© 1990 GENERAL MOTORS SERVICE PARTS OPERATIONS—LIGHT TRUCK 52R

CONTINUED

5.	17.507	**MOLDING**, RR WHL OPENING-LH (W/B96)	.....	**15616290**	____	____	____
	17.507	**MOLDING**, RR WHL OPENING-RH(W/B96)	.....	**15616291**	____	____	____
6.	17.507	**MOLDING**, BODY SI LWR RR-LH (W/B85)	.....	**15628791**	____	____	____
	17.507	**MOLDING**, BODY SI LWR RR-RH (W/B85)	.....	**15628792**	____	____	____
7.	17.507	**MOLDING KIT**, BODY SI LWR RR EXT-LH (W/B85)	.....	**15618492**	____	____	____
	17.507	**MOLDING KIT**, BODY SI LWR RR EXT-RH (W/B85)	.....	**15618493**	____	____	____
8.	16.445	**GUARD**, DR EDGE (W/B93)	.....	**15641889**	____	____	____
9.	17.215	**MOLDING**, E/GATE LWR (W/B85)	.....	**15568977**	____	____	____

© 1990 GENERAL MOTORS SERVICE PARTS OPERATIONS—LIGHT TRUCK 52R

TZR17-02
062890

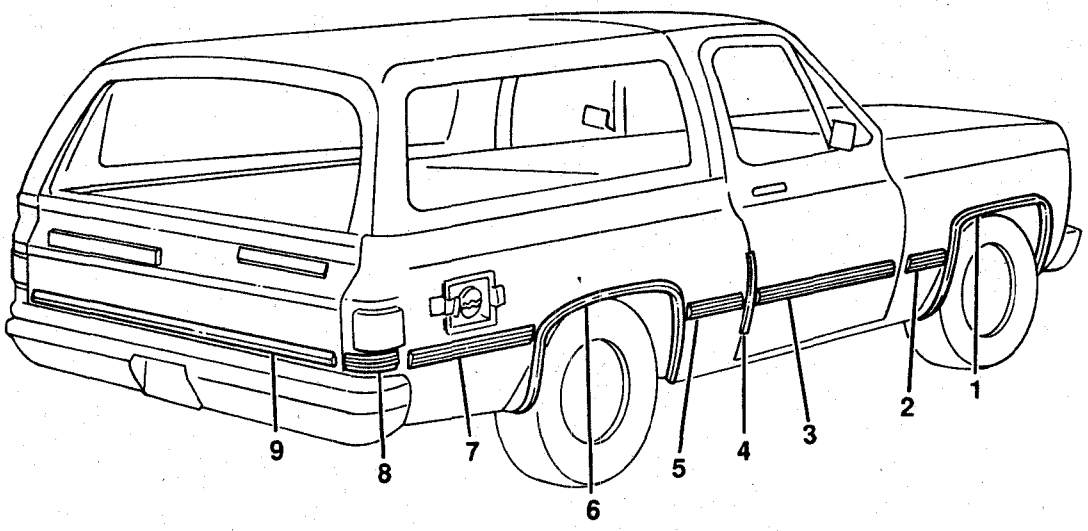

TZR17-02@

1989-1991 V MOLDINGS (W/B85,B93,B96)

ILL NO.	GROUP	DESCRIPTION	USAGE	QTY	PART NUMBER	PER VEH	PRICE EACH	PRICE EXT
1.	8.132	**MOLDING KIT**, FRT FDR WHL HSG-LH (W/B96)			15616313			
	8.132	**MOLDING KIT**, FRT FDR WHL HSG-RH (W/B96)			15616312			
2.	8.132	**MOLDING**, FRT FDR LWR RR-LH (W/B85)			15628787			
	8.132	**MOLDING**, FRT FDR LWR RR-RH (W/B85)			15628788			
3.	17.507	**MOLDING**, SI F/D LWR-LH (W/B85)			15565467			
	17.507	**MOLDING**, SI F/D LWR-RH (W/B85)			15565468			
4.	16.445	**GUARD**, DR EDGE (W/B93)			15641889			
5.	17.507	**MOLDING**, BODY SI LWR FRT-LH (W/B85)			15628789			
	17.507	**MOLDING**, BODY SI LWR FRT-RH (W/B85)			15628790			
6.	17.507	**MOLDING**, RR WHEEL OPENING-LH (W/B96)			15616290			

© 1990 GENERAL MOTORS SERVICE PARTS OPERATIONS—LIGHT TRUCK 52R

6.	17.507	**MOLDING**, RR WHEEL OPENING-RH (W/B96)	.....	**15616291**	____	____	____
7.	17.507	**MOLDING**, BODY SI LWR RR-LH (W/B85)	.....	**15628793**	____	____	____
	17.507	**MOLDING**, BODY SI LWR RR-RH (W/B85)	.....	**15628794**	____	____	____
8.	17.507	**MOLDING KIT**, BODY SI LWR RR EXT-LH (W/B85)	.....	**15618494**	____	____	____
	17.507	**MOLDING KIT**, BODY SI LWR RR EXT-RH (W/B85)	.....	**15618495**	____	____	____
9.	17.215	**MOLDING**, E/GATE LWR (W/B85)	.....	**15568977**	____	____	____

TR17-302
120689

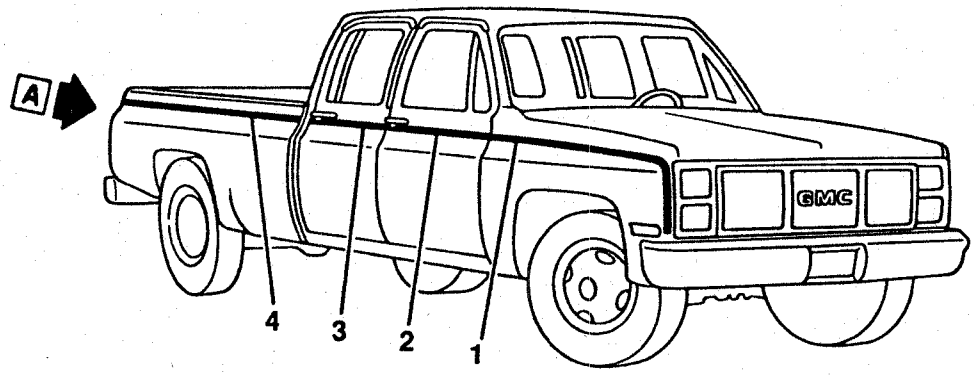

EXC RO5

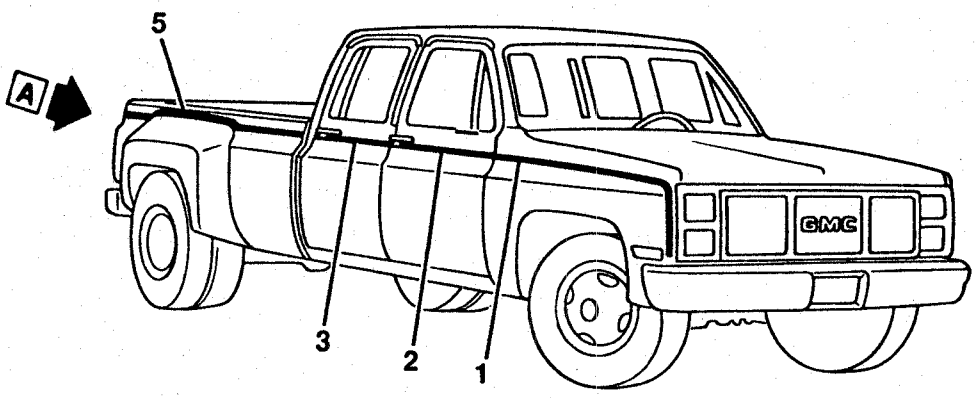

W/RO5

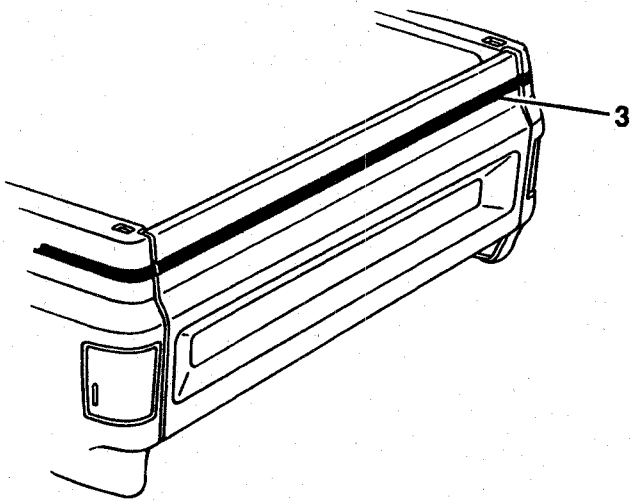

VIEW A

TR17-302@

© 1990 GENERAL MOTORS SERVICE PARTS OPERATIONS—LIGHT TRUCK 52R

1989-1990 RV(43) DECALS & STRIPES

ILL NO.	GROUP	DESCRIPTION	USAGE	QTY	PART NUMBER	PER VEH	PRICE EACH	PRICE EXT
1.	8.132	STRIPE, F/FDR-LH (DK BLUE/LT SLATE-23A)			14070569			
	8.132	STRIPE, F/FDR-RH (DK BLUE/LT SLATE-23A)			14070570			
	8.132	STRIPE, F/FDR-LH (LT BLUE/DK BLUE-27A)			14070575			
	8.132	STRIPE, F/FDR-RH (LT BLUE/DK BLUE-27A)			14070576			
	8.132	STRIPE, F/FDR-LH (DK BROWN/ALMOND-56A)			14070583			
	8.132	STRIPE, F/FDR-RH (DK BROWN/ALMOND-56A)			14070584			
	8.132	STRIPE, F/FDR-LH (ALMOND/DK BROWN-61A)			14070585			
	8.132	STRIPE, F/FDR-RH (ALMOND/DK BROWN-61A)			14070586			
	8.132	STRIPE, F/FDR-LH (VERMILLION/DK CARMINE-73A)			14070587			
	8.132	STRIPE, F/FDR-RH (VERMILLION/DK CARMINE-(73A)			14070588			
	8.132	STRIPE, F/FDR-LH (VERMILLION/LT SLATE-75A)			14070591			
	8.132	STRIPE, F/FDR-RH (VERMILLION/LT SLATE-75A)			14070592			
	8.132	STRIPE, F/FDR-LH (VERMILLION/BLACK-77A)			14070595			
	8.132	STRIPE, F/FDR-RH (VERMILLION/BLACK-77A)			14070596			
	8.132	STRIPE, F/FDR-LH (SILVER/BLACK-42A)			15565143			
	8.132	STRIPE, F/FDR-RH (SILVER/BLACK-42A)			15565144			
	8.132	STRIPE, F/FDR-LH (GOLD/BLACK-88A)			15565145			
	8.132	STRIPE, F/FDR-RH (GOLD/BLACK-88A)			15565146			
2.	17.507	STRIPE, FRT SI DR (DK BLUE MET-23A)			14070641			
	17.507	STRIPE, FRT SI DR (LT TO DK BLUE-27A)			14070647			
	17.507	STRIPE, FRT SI DR (DK BROWN TO ALMOND-56A)			14070655			
	17.507	STRIPE, FRT SI DR (ALMOND TO DK BROWN-61A)			14070657			
	17.507	STRIPE, FRT SI DR (VERMILLION TO DK CARMINE-73A)			14070659			
	17.507	STRIPE, FRT SI DR (VERMILLION TO LT SLATE-75A)			14070663			
	17.507	STRIPE, FRT SI DR (VERMILLION TO BLACK-77A)			14070667			
	17.507	STRIPE, FRT SI DR (SILVER-42A)			15565132			
	17.507	STRIPE, FRT SI DR (GOLD-88A)			15565133			
3.	17.215	STRIPE, T/GATE & RR SI DR (DK BLUE MET-23A)(*1)			14072834			
	17.215	STRIPE, T/GATE & RR SI DR (LT TO DK BLUE-27A)(*1)			14072837			
	17.215	STRIPE, T/GATE & RR SI DR (DK BROWN TO ALMOND-56A)(*1)			14072841			
	17.215	STRIPE, T/GATE & RR SI DR (ALMOND/DK BROWN-61A)(*1)			14072842			
	17.215	STRIPE, T/GATE & RR SI DR (VERMILLION/DK CARMINE-73A) (*1)			14072843			
	17.215	STRIPE, T/GATE & RR SI DR (VERMILLION/LT SLATE-75A)(*1)			14072845			
	17.215	STRIPE, T/GATE & RR SI DR (VERMILLION/BLACK-77A)(*1)			14072847			

© 1990 GENERAL MOTORS SERVICE PARTS OPERATIONS—LIGHT TRUCK 52R

CONTINUED

3.	17.215	STRIPE, T/GATE & RR SI DR (SILVER/BLACK-42A)(*1)		15565158	___	___	___
	17.215	STRIPE, T/GATE & RR SI DR (GOLD/BLACK-88A)(*1)		15565159	___	___	___
4.	17.507	STRIPE, PUBX SI-LH (LT TO DK BLUE-27A)(*1)		14070697	___	___	___
	17.507	STRIPE, PUBX SI-RH (LT TO DK BLUE-27A)(*1)		14070698	___	___	___
	17.507	STRIPE, PUBX SI-LH (ALMOND TO DK BROWN-61A)(*1)		14072807	___	___	___
	17.507	STRIPE, PUBX SI-RH (ALMOND TO DK BROWN-61A)(*1)		14072808	___	___	___
	17.507	STRIPE, PUBX SI-LH (VERMILLION TO DK CARMINE-73A)(*1)		14072813	___	___	___
	17.507	STRIPE, PUBX SI-RH (VERMILLION TO DK CARMINE-73A)(*1)		14072814	___	___	___
	17.507	STRIPE, PUBX SI-LH (VERMILLION TO LT SLATE-75A)(*1)		14072819	___	___	___
	17.507	STRIPE, PUBX SI-RH (VERMILLION TO LT SLATE-75A)(*1)		14072820	___	___	___
	17.507	STRIPE, PUBX SI-LH (VERMILLION TO BLACK-77A)(*1)		14072829	___	___	___
	17.507	STRIPE, PUBX SI-RH (VERMILLION TO BLACK-77A)(*1)		14072830	___	___	___
	17.507	STRIPE, PUBX SI-LH (DK BROWN/ALMOND 56A)(*1)		15531677	___	___	___
	17.507	STRIPE, PUBX SI-RH (DK BROWN/ALMOND-56A)(*1)		15531678	___	___	___
	17.507	STRIPE, PUBX SI-LH (GOLD/BLACK-88A)(*1)		15565139	___	___	___
	17.507	STRIPE, PUBX SI-RH (GOLD/BLACK-88A)(*1)		15565140	___	___	___
	17.507	STRIPE, PUBX SI-LH (SILVER/BLACK-42A)(*1)		15571545	___	___	___
	17.507	STRIPE, PUBX SI-RH (SILVER/BLACK-42A)(*1)		15571546	___	___	___
	17.507	STRIPE, PUBX SI-LH (DK BLUE MET-23A)(*1)		14070687	___	___	___
	17.507	STRIPE, PUBX SI-RH (DK BLUE MET-23A)(*1)		14070688	___	___	___
5.	17.507	STRIPE, PUBX SI-LH (DK BROWN TO ALMOND-56A)		14072803	___	___	___
	17.507	STRIPE, PUBX SI-RH (DK BROWN TO ALMOND-56A)		14072804	___	___	___
	17.507	STRIPE, PUBX SI-LH (ALMOND TO DK BROWN-61A)		14072809	___	___	___
	17.507	STRIPE, PUBX SI-RH (ALMOND TO DK BROWN-61A)		14072810	___	___	___
	17.507	STRIPE, PUBX SI-LH (VERMILLION TO DK CARMINE-73A)		14072815	___	___	___
	17.507	STRIPE, PUBX SI-RH (VERMILLION TO DK CARMINE-73A)		14072816	___	___	___
	17.507	STRIPE, PUBX SI-LH (VERMILLION TO BLACK-77A)		14072831	___	___	___
	17.507	STRIPE, PUBX SI-RH (VERMILLION TO BLACK-77A)		14072832	___	___	___
	17.507	STRIPE, PUBX SI-LH (LT BLUE TO DK BLUE-27A)		14076731	___	___	___
	17.507	STRIPE, PUBX SI-RH (LT BLUE TO DK BLUE-27A)		14076732	___	___	___
	17.507	STRIPE, PUBX SI-LH (SILVER/BLACK-42A)		15565137	___	___	___
	17.507	STRIPE, PUBX SI-RH (SILVER/BLACK-42A)		15565138	___	___	___
	17.507	STRIPE, PUBX SI-LH (GOLD/BLACK-88A)		15565141	___	___	___
	17.507	STRIPE, PUBX SI-RH (GOLD/BLACK-88A)		15565142	___	___	___
	17.507	STRIPE, PUBX SI-LH (BLUE-23A)		15596983	___	___	___
	17.507	STRIPE, PUBX SI-RH (BLUE-23A)		15596984	___	___	___

NOTE 1: CUT AS REQUIRED.

© 1990 GENERAL MOTORS SERVICE PARTS OPERATIONS—LIGHT TRUCK 52R

NOTES

BLANK PAGE

TR17-303
112989

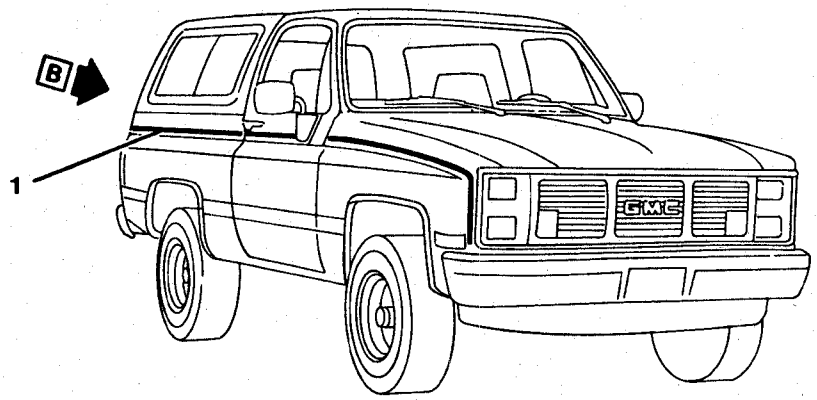

16

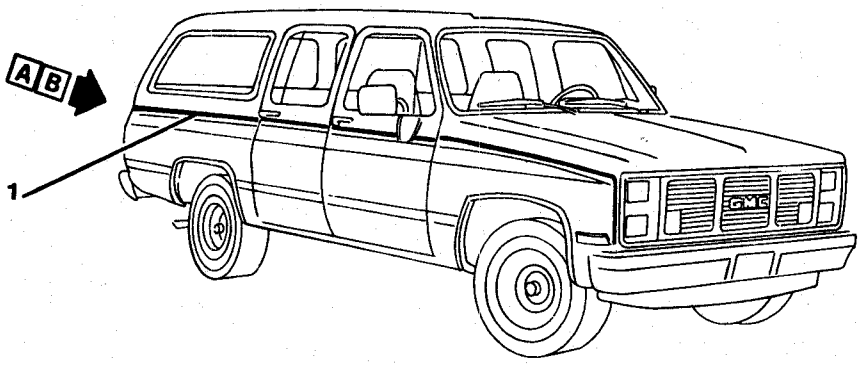

06

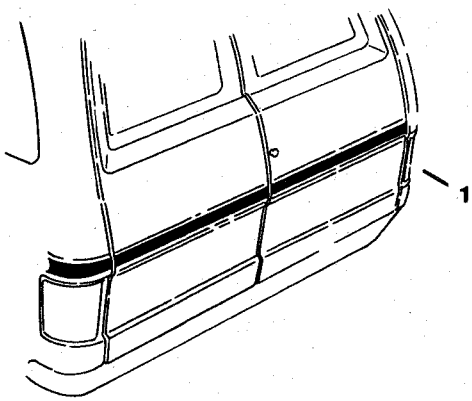

VIEW A

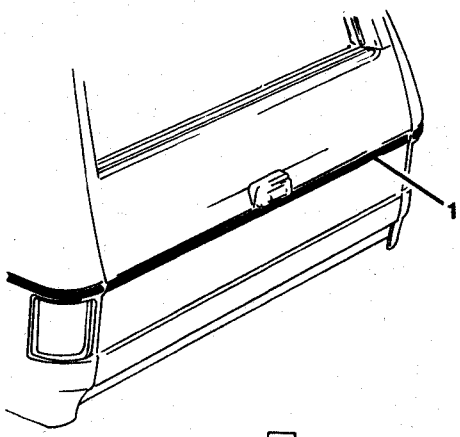

VIEW B

TR17-303@

© 1990 GENERAL MOTORS SERVICE PARTS OPERATIONS—LIGHT TRUCK 52R

1989-1990 RV(06-16) DECALS & STRIPES

ILL NO.	GROUP	DESCRIPTION	USAGE	QTY	PART NUMBER	PER VEH	PRICE EACH	PRICE EXT
1.	8.132	**STRIPE** (SILVER/BLACK-42A)(3-BAND)			15617877			
	8.132	**STRIPE** (LT BLUE/DK BLUE-27A)(3-BAND)			15617878			
	8.132	**STRIPE** (GOLD/BLACK-88A)(3-BAND)			15617879			
	8.132	**STRIPE** (DK BLUE/SLATE-23A)(3-BAND)			15617880			
	8.132	**STRIPE** (DK BROWN/ALMOND-56A)(3-BAND)			15617881			
	8.132	**STRIPE** (ALMOND/DK BROWN-61A)(3-BAND)			15617882			
	8.132	**STRIPE** (VERMILLION/DK CARMINE-73A)(3-BAND)			15617883			
	8.132	**STRIPE** (VERMILLION/SLATE-75A)(3-BAND)			15617884			
	8.132	**STRIPE** (VERMILLION/BLACK-77A)(3-BAND)			15617885			

© 1990 GENERAL MOTORS SERVICE PARTS OPERATIONS—LIGHT TRUCK 52R

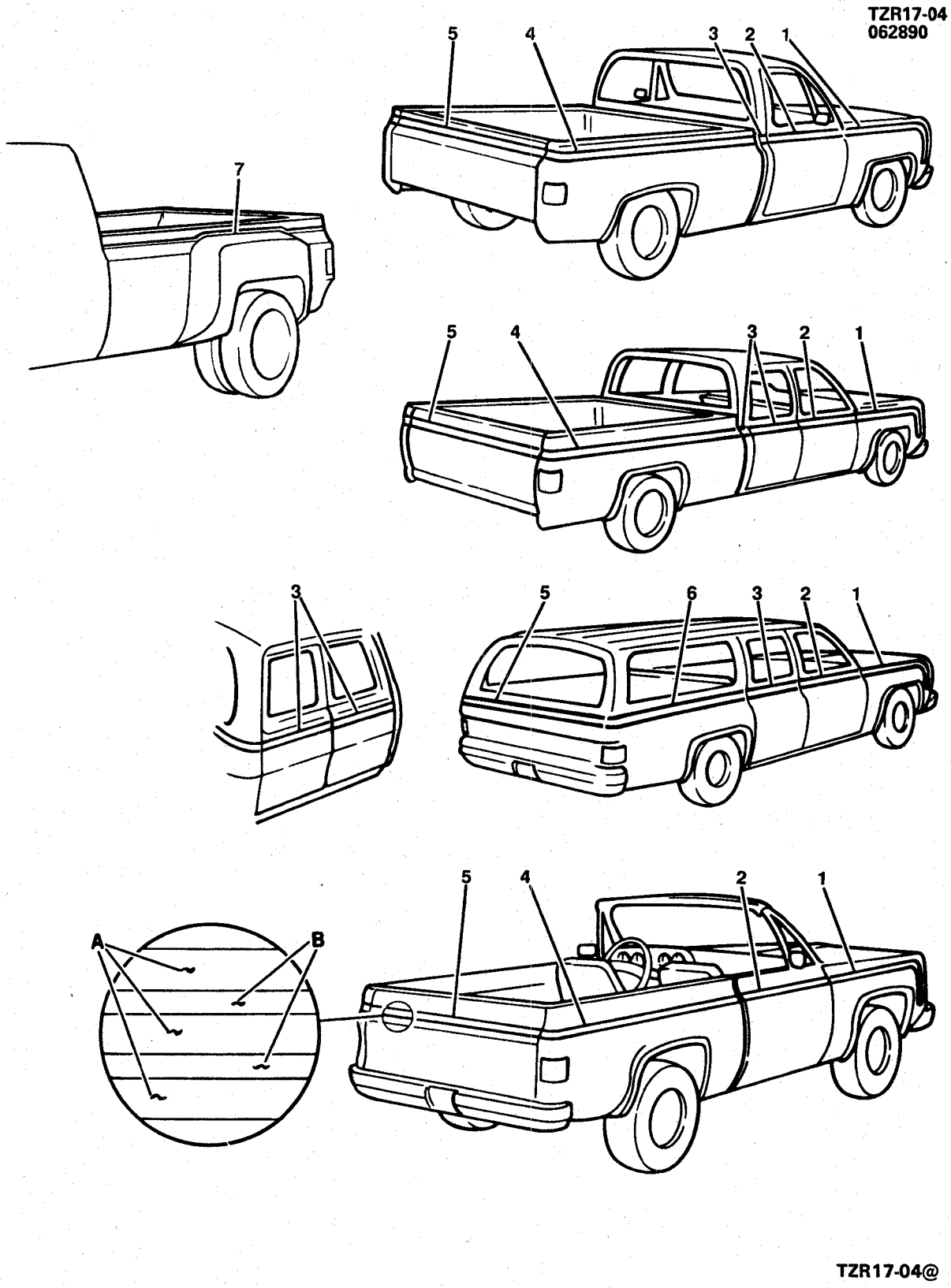

© 1990 GENERAL MOTORS SERVICE PARTS OPERATIONS—LIGHT TRUCK 52R

1985-1986 CK STRIPES (W/DECOR PKG ZY5/ZY9)

ILL NO.	GROUP	DESCRIPTION	USAGE	QTY	PART NUMBER	PER VEH	PRICE EACH	PRICE EXT
1.	8.132	STRIPE, F/FDR-LH (A-DK BLUE B-LT SLATE)(23A)			14070569			
	8.132	STRIPE, F/FDR-RH (A-DK BLUE B-LT SLATE)(23A)			14070570			
	8.132	STRIPE, F/FDR-LH (A-LT BLUE B-DK BLUE)(27A)			14070575			
	8.132	STRIPE, F/FDR-RH (A-LT BLUE B-DK BLUE)(27A)			14070576			
	8.132	STRIPE, F/FDR-LH (A-DK BLUE B-LT BLUE MET)(30A)(1985- 87)			14070577			
	8.132	STRIPE, F/FDR-RH (A-DK BLUE B-LT BLUE MET)(30A)(1985- 87)			14070578			
	8.132	STRIPE, F/FDR-LH (A-DK BLUE B-WHITE)(32A)(1985-87)			14070581			
	8.132	STRIPE, F/FDR-RH (A-DK BLUE B-WHITE)(32A)(1985-87)			14070582			
	8.132	STRIPE, F/FDR-LH (A-DK BROWN B-ALMOND)(56A)			14070583			
	8.132	STRIPE, F/FDR-RH (A-DK BROWN B-ALMOND)(56A)			14070584			
	8.132	STRIPE, F/FDR-LH (A-ALMOND B-DK BROWN)(61A)			14070585			
	8.132	STRIPE, F/FDR-RH (A-ALMOND B-DK BROWN)(61A)			14070586			
	8.132	STRIPE, F/FDR-LH (A-VERMILLION B-DK CARMINE)(73A)			14070587			
	8.132	STRIPE, F/FDR-RH (A-VERMILLION B-DK CARMINE)(73A)			14070588			
	8.132	STRIPE, F/FDR-LH (A-VERMILLION B-LT SLATE)(75A)(1985-89)			14070591			
	8.132	STRIPE, F/FDR-RH (A-VERMILLION B-LT SLATE)(75A)(1985-89)			14070592			
	8.132	STRIPE, F/FDR-LH (A-VERMILLION B-BLACK)(77A)			14070595			
	8.132	STRIPE, F/FDR-RH (A-VERMILLION B-BLACK)(77A)			14070596			
	8.132	STRIPE, F/FDR-LH (GOLD/BLACK) (88A)			15565145			
	8.132	STRIPE, F/FDR-RH (GOLD/BLACK) (88A)			15565146			
2.	17.507	STRIPE, F/D (A-DK BLUE B-LT SLATE)(23A)			14070641			
	17.507	STRIPE, F/D (A-LT BLUE B-DK BLUE)(27A)			14070647			
	17.507	STRIPE, F/D (A-DK BLUE B-LT BLUE MET)(30A)(1985-87)			14070649			
	17.507	STRIPE, F/D (A-DK BLUE B-WHITE) (32A)(1985-87)			14070653			
	17.507	STRIPE, F/D (A-DK BROWN B-ALMOND)(56A)			14070655			
	17.507	STRIPE, F/D (A-ALMOND B-DK BROWN)(61A)			14070657			
	17.507	STRIPE, F/D (A-VERMILLION B-DK CARMINE)(73A)			14070659			
	17.507	STRIPE, F/D (A-VERMILLION B-LT SLATE)(75A)(1985-88)			14070663			
	17.507	STRIPE, F/D (A-VERMILLION B-BLACK)(77A)			14070667			
	17.507	STRIPE, F/D (GOLD/BLACK)(88A)			15565133			
3.	17.507	STRIPE, (A-DK BLUE B-LT SLATE) (23A)(17.215)			14072834			
	17.507	STRIPE, (A-LT BLUE B-DK BLUE) (27A)(17.215)			14072837			
	17.507	STRIPE, (A-DK BLUE B-LT BLUE MET)(30A)(17.215)(1985-87)			14072838			
	17.507	STRIPE, (A-DK BLUE B-WHITE) (32A)(17.215)(1985-87)			14072840			

© 1990 GENERAL MOTORS SERVICE PARTS OPERATIONS—LIGHT TRUCK 52R

CONTINUED

3.	17.215	STRIPE, (A-DK BROWN B-ALMOND)(56A)		14072841	___	___	___
	17.507	STRIPE, (A-ALMOND B-DK BROWN)(61A)(17.215)		14072842	___	___	___
	17.507	STRIPE, (A-VERMILLION B-DK CARMINE)(73A)(17.215)		14072843	___	___	___
	17.507	STRIPE, (A-VERMILLION B-LT SLATE)(75A)(17.215)(1985-90)		14072845	___	___	___
	17.507	STRIPE, (A-VERMILLION B-BLACK)(77A)(17.215)		14072847	___	___	___
	17.507	STRIPE, (GOLD/BLACK)(88A)(17.215)		15565159	___	___	___
4.	17.507	STRIPE, BODY-LH (A-DK BLUE B-LT SLATE)(23A)(*2)		14070687	___	___	___
	17.507	STRIPE, BODY-RH (A-DK BLUE B-LT SLATE)(23A)(*2)		14070688	___	___	___
	17.507	STRIPE, BODY-LH (A-LT BLUE B-DK BLUE)(27A)(*2)		14070697	___	___	___
	17.507	STRIPE, BODY-RH (A-LT BLUE B-DK BLUE)(27A)(*2)		14070698	___	___	___
	17.507	STRIPE, BODY-LH (A-DK BLUE B-LT BLUE MET)(30A)(1985-87)(*3)		14070609	___	___	___
	17.507	STRIPE, BODY-RH (A-DK BLUE B-LT BLUE MET)(30A)(1985-87)(*3)		14070610	___	___	___
	17.507	STRIPE, BODY-LH/RH (A-DK BLUE B-WHITE)(32A)(1985-87)(*2)		14072840	___	___	___
	17.507	STRIPE, BODY-LH (A-DK BROWN B-ALMOND)(56A)(*2)		15531677	___	___	___
	17.507	STRIPE, BODY-RH (A-DK BROWN B-ALMOND)(56A)(*2)		15531678	___	___	___
	17.507	STRIPE, BODY-LH (A-ALMOND B-DK BROWN)(61A)(*2)		14072807	___	___	___
	17.507	STRIPE, BODY-RH (A-ALMOND B-DK BROWN)(61A)(*2)		14072808	___	___	___
	17.507	STRIPE, BODY-LH (A-VERMILLION B-DK CARMINE)(73A)(*2)		14072813	___	___	___
	17.507	STRIPE, BODY-RH (A-VERMILLION B-DK CARMINE)(73A)(*2)		14072814	___	___	___
	17.507	STRIPE, BODY-LH (A-VERMILLION B-LT SLATE)(75A)(1985-89)(*2)		14072819	___	___	___
	17.507	STRIPE, BODY-RH (A-VERMILLION B-LT SLATE)(75A)(1985-89)(*2)		14072820	___	___	___
	17.507	STRIPE, BODY-LH (A-VERMILLION B-BLACK)(77A)(*2)		14072829	___	___	___
	17.507	STRIPE, BODY-RH (A-VERMILLION B-BLACK)(77A)(*2)		14072830	___	___	___
	17.507	STRIPE, BODY-LH (GOLD/BLACK)(88A)		15565139	___	___	___
	17.507	STRIPE, BODY-RH (GOLD/BLACK)(88A)		15565140	___	___	___
5.	17.215	STRIPE, T/GATE (A-DK BLUE B-LT SLATE)(23A)		14072834	___	___	___
	17.215	STRIPE, T/GATE (A-LT BLUE B-DK BLUE)(27A)		14072837	___	___	___
	17.215	STRIPE, T/GATE (A-DK BLUE B-LT BLUE MET)(30A)(1985-87)		14072838	___	___	___
	17.215	STRIPE, T/GATE (A-DK BLUE B-WHITE)(32A)(1985-87)		14072840	___	___	___
	17.215	STRIPE, T/GATE (A-DK BROWN B-ALMOND)(56A)		14072841	___	___	___
	17.215	STRIPE, T/GATE (A-ALMOND B-DK BROWN)(61A)		14072842	___	___	___
	17.215	STRIPE, T/GATE (A-VERMILLION B-DK CARMINE)(73A)		14072843	___	___	___
	17.215	STRIPE, T/GATE (A-VERMILLION B-LT SLATE)(75A)(1985-90)		14072845	___	___	___
	17.215	STRIPE, T/GATE (A-VERMILLION B-BLACK)(77A)		14072847	___	___	___
	17.215	STRIPE, T/GATE (GOLD/BLACK)(88A)		15565159	___	___	___
6.	17.507	STRIPE, BODY-LH (A-DK BLUE B-LT SLATE)(23A)(1985-87)		15596985	___	___	___
	17.507	STRIPE, BODY-RH (A-DK BLUE B-LT SLATE)(23A)(1985-87)		15596986	___	___	___

© 1990 GENERAL MOTORS SERVICE PARTS OPERATIONS—LIGHT TRUCK 52R

CONTINUED

6.	17.507	STRIPE, BODY-LH (A-LT BLUE B-DK BLUE)(27A)(1985-88)	.....	14070607	___	___	___
	17.507	STRIPE, BODY-RH (A-LT BLUE B-DK BLUE)(27A)(1985-88)	.....	14070608	___	___	___
	17.507	STRIPE, BODY-LH (A-DK BLUE B-LT BLUE MET)(30A)(1985- 87)	.....	14070611	___	___	___
	17.507	STRIPE, BODY-RH (A-DK BLUE B-LT BLUE MET)(30A)(1985- 87)	.....	14070612	___	___	___
	17.507	STRIPE, BODY-LH (A-DK BLUE B-WHITE)(32A)(1985-87)	.....	14070615	___	___	___
	17.507	STRIPE, BODY-RH (A-DK BLUE B-WHITE)(32A)(1985-87)	.....	14070616	___	___	___
	17.507	STRIPE, BODY SI (A-DK BROWN B-ALMOND)(56A)(1986-88)	.....	15531689	___	___	___
	17.507	STRIPE, BODY SI (A-DK BROWN B-ALMOND)(56A)(1986-88)	.....	15531690	___	___	___
	17.507	STRIPE, BODY-LH (A-ALMOND B-DK BROWN)(61A)(1985-88)	.....	14070621	___	___	___
	17.507	STRIPE, BODY-RH (A-ALMOND B-DK BROWN)(61A)(1985-88)	.....	14070622	___	___	___
	17.507	STRIPE, BODY-LH (A-VERMILLION B-DK CARMINE)(73A)(1985-88)	.....	14070625	___	___	___
	17.507	STRIPE, BDOY-RH (A-VERMILLION B-DK CARMINE)(73A)(1985-88)	.....	14070626	___	___	___
	17.507	STRIPE, BODY-LH (A-VERMILLION B-LT SLATE)(75A)(1985- 88)	.....	14070629	___	___	___
	17.507	STRIPE, BODY-RH (A-VERMILLION B-LT SLATE)(75A)(1985- 88)	.....	14070630	___	___	___
	17.507	STRIPE, BODY-LH (A-VERMILLION B-BLACK)(77A)(1985-88)	.....	14070633	___	___	___
	17.507	STRIPE, BODY-RH (A-VERMILLION B-BLACK)(77A)(1985-88)	.....	14070634	___	___	___
7.	17.507	STRIPE, PUBX SI-LH (A-DK BLUE B-LT SLATE)(23A)	.....	15596983	___	___	___
	17.507	STRIPE, PUBX SI-RH (A-DK BLUE B-LT SLATE)(23A)	.....	15596984	___	___	___
	17.507	STRIPE, PUBX SI-LH (A-LT BLUE B-DK BLUE)(27A)	.....	14076731	___	___	___
	17.507	STRIPE, PUBX SI-RH (A-LT BLUE B-DK BLUE)(27A)	.....	14076732	___	___	___
	17.507	STRIPE, PUBX SI-LH (A-DK BLUE B-WHITE)(32A)(1985-87)	.....	14072801	___	___	___
	17.507	STRIPE, PUBX SI-RH (A-DK BLUE B-WHITE)(32A)(1985-87)	.....	14072802	___	___	___
	17.507	STRIPE, PUBX SI-LH (A-DK BROWN B-ALMOND)(56A)	.....	14072803	___	___	___
	17.507	STRIPE, PUBX SI-RH (A-DK BROWN B-ALMOND)(56A)	.....	14072804	___	___	___
	17.507	STRIPE, PUBX SI-LH (A-ALMOND B-DK BROWN)(61A)	.....	14072809	___	___	___
	17.507	STRIPE, PUBX SI-RH (A-ALMOND B-DK BROWN)(61A)	.....	14072810	___	___	___
	17.507	STRIPE, PUBX SI-LH (A-VERMILLION B-DK CARMINE)(73A)	.....	14072815	___	___	___
	17.507	STRIPE, PUBX SI-RH (A-VERMILLION B-DK CARMINE)(73A)	.....	14072816	___	___	___
	17.507	STRIPE, PUBX SI-LH (A-VERMILLION B-LT SLATE)(75A) (1985-89)	.....	14072821	___	___	___
	17.507	STRIPE, PUBX SI-RH (A-VERMILLION B-LT SLATE)(75A)	.....	14072822	___	___	___
	17.507	STRIPE, PUBX SI-LH (A-VERMILLION B-BLACK)(77A)	.....	14072831	___	___	___
	17.507	STRIPE, PUBX SI-RH (A-VERMILLION B-BLACK)(77A)	.....	14072832	___	___	___
	17.507	STRIPE, PUBX SI-LH (SILVER/BLACK)(88A)	.....	15565141	___	___	___
	17.507	STRIPE, PUBX SI-RH (SILVER/BLACK)(88A)	.....	15565142	___	___	___

NOTE 2: NUMBERS LISTED ARE 103.5" LONG & WILL REQUIRE CUTTING TO LENGTH WHEN USED ON 6 1/2' PICKUP BOX OR BLAZER MODELS.

NOTE 3: USED ON BLAZER MODEL ONLY. EXACT LENGTH, NO CUTTING REQUIRED

© 1990 GENERAL MOTORS SERVICE PARTS OPERATIONS—LIGHT TRUCK 52R

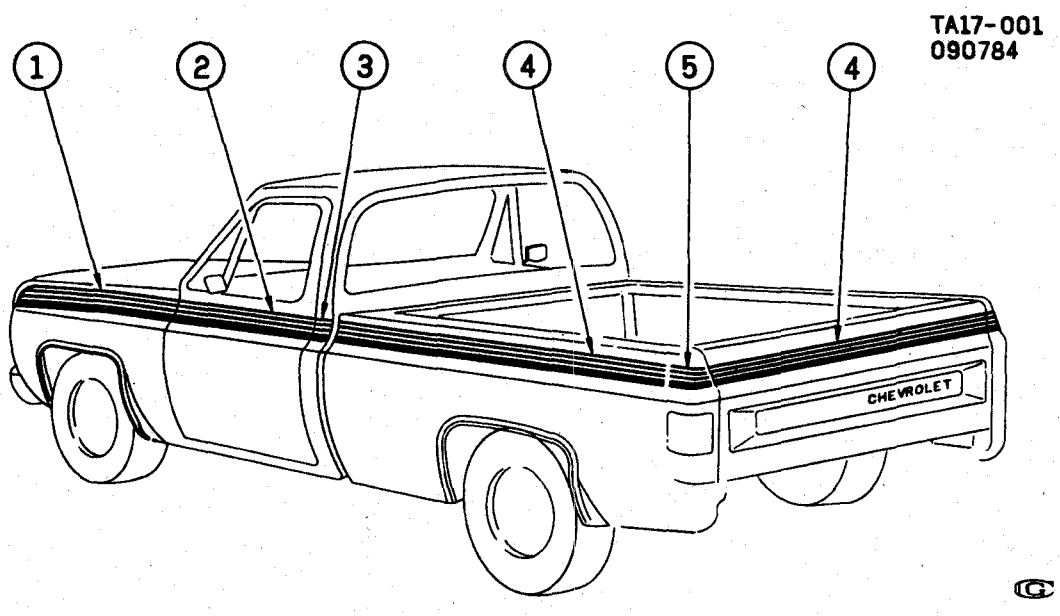

1985-1986 CK(03) STRIPES/BODY SIDE & ENDGATE (W/VALUE DECOR PKG YJ6/D92)
1987 RV(03) STRIPES/BODY SIDE & ENDGATE (W/VALUE DECOR PKG YJ6/D92)

ILL NO.	GROUP	DESCRIPTION	USAGE	QTY	PART NUMBER	PER VEH	PRICE EACH	PRICE EXT
1.	8.132	STRIPE, F/FDR SI-LH (BLACK-19A)			15594921			
	8.132	STRIPE, F/FDR SI-RH (BLACK-19A)			15594922			
	8.132	STRIPE, F/FDR SI-LH (WHITE-12A)			15594931			
	8.132	STRIPE, F/FDR SI-RH (WHITE-12A)			15594932			
	8.132	STRIPE, F/FDR SI-LH (BLUE-29A)			15594941			
	8.132	STRIPE, F/FDR SI-RH (BLUE-29A)			15594942			
	8.132	STRIPE, F/FDR SI-LH (RED-72A)			15594951			
	8.132	STRIPE, F/FDR SI-RH (RED-72A)			15594952			
2.	17.507	STRIPE, DOOR-LH (BLACK-19A)			15594923			
	17.507	STRIPE, DOOR-RH (BLACK-19A)			15594924			
	17.507	STRIPE, DOOR-LH (WHITE-12A)			15594933			
	17.507	STRIPE, DOOR-RH (WHITE-12A)			15594934			
	17.507	STRIPE, DOOR-LH (BLUE-29A)			15594943			
	17.507	STRIPE, DOOR-RH (BLUE-29A)			15594944			
	17.507	STRIPE, DOOR-LH (RED-72A)			15594953			
	17.507	STRIPE, DOOR-RH (RED-72A)			15594954			
3.	17.507	STRIPE, BODY SI-LH (BLACK-19A)			15594925			
	17.507	STRIPE, BODY SI-RH (BLACK-19A)			15594926			
	17.507	STRIPE, BODY SI-LH (WHITE-12A)			15594935			
	17.507	STRIPE, BODY SI-RH (WHITE-12A)			15594936			
	17.507	STRIPE, BODY SI-LH (BLUE-29A)			15594945			
	17.507	STRIPE, BODY SI-RH (BLUE-29A)			15594946			
	17.507	STRIPE, BODY SI-LH (RED-72A)			15594955			
	17.507	STRIPE, BODY SI-RH (RED-72A)			15594956			
4.	17.507	STRIPE, PUBX SI & T/GATE (BLACK-19A)(*1)			15593811			
	17.507	STRIPE, PUBX SI & T/GATE (WHITE-12A)(*1)			15593812			
	17.507	STRIPE, PUBX SI & T/GATE (BLUE-29A)(*1)			15593813			
	17.507	STRIPE, PUBX SI & T/GATE (RED-72A)(*1)			15593814			
5.	17.507	STRIPE, PUBX END-LH (BLACK-19A)			15593819			
	17.507	STRIPE, PUBX END-RH (BLACK-19A)			15593820			
	17.507	STRIPE, PUBX END-LH (WHITE-12A)			15593821			

© 1990 GENERAL MOTORS SERVICE PARTS OPERATIONS—LIGHT TRUCK 52R

5.	17.507	**STRIPE**, PUBX END-RH (WHITE-12A)	**15593822**	____	____	____
	17.507	**STRIPE**, PUBX END-LH (BLUE-29A)	**15593823**	____	____	____
	17.507	**STRIPE**, PUBX END-RH (BLUE-29A)	**15593824**	____	____	____
	17.507	**STRIPE**, PUBX END-LH (RED-72A)	**15593825**	____	____	____
	17.507	**STRIPE**, PUBX END-RH (RED-72A)	**15593826**	____	____	____

NOTE 1: PART NUMBERS LISTED ARE APPROXIMATELY 98 3/8" LONG & MUST BE CUT AS REQUIRED WHEN USED FOR TAILGATE APPLICATION OR ON 6 1/2' BOX.

© 1990 GENERAL MOTORS SERVICE PARTS OPERATIONS—LIGHT TRUCK 52R