SWASTIK SALES CORPORATION

SSC

Engineering
a World of Possibilities

Tunnels & Dams | Bridges | Railways & Metros | National Highways | Green Energy | Safety Equipment

+91 708 781 5515 | +91 869 971 3660
contact@sscglobal.in

Page Of Content

01 **What We Do?**
Overview of our expertise, capabilities, and the industries we serve with precision-engineered solutions.

02 **About Us**
A legacy of over 65 years in manufacturing excellence, innovation, and global infrastructure partnerships.

03 **Chairman's Note**
Message from our leadership, reflecting SSC's vision, values, and dedication to quality and growth.

04 **Machines**
An insight into our advanced production units and the technology powering our precision manufacturing.

05 **Our Mission & Vision**
The guiding principles shaping our purpose, innovation, and pursuit of engineering excellence.

06 **Global Presence**
A look at our expanding international network and operations across 15+ countries.

07 Projects Executed

Highlights of key national and international infrastructure projects powered by SSC components.

08 Clients

Our trusted collaborations with leading public and private sector enterprises worldwide.

09 Product Line Description

Detailed overview of our specialized product families and their technical applications.

10 Certifications

A testament to our quality standards, industry accreditations, and manufacturing compliance.

11 Contact Us

Get in touch with SSC's regional offices and support network for collaborations and inquiries.

What We Do

Swastik Sales Corporation (SSC) manufactures precision-engineered components supporting global infrastructure projects. Our expertise ensures reliability, strength, and performance across tunnels, bridges, dams, metros, and highways.

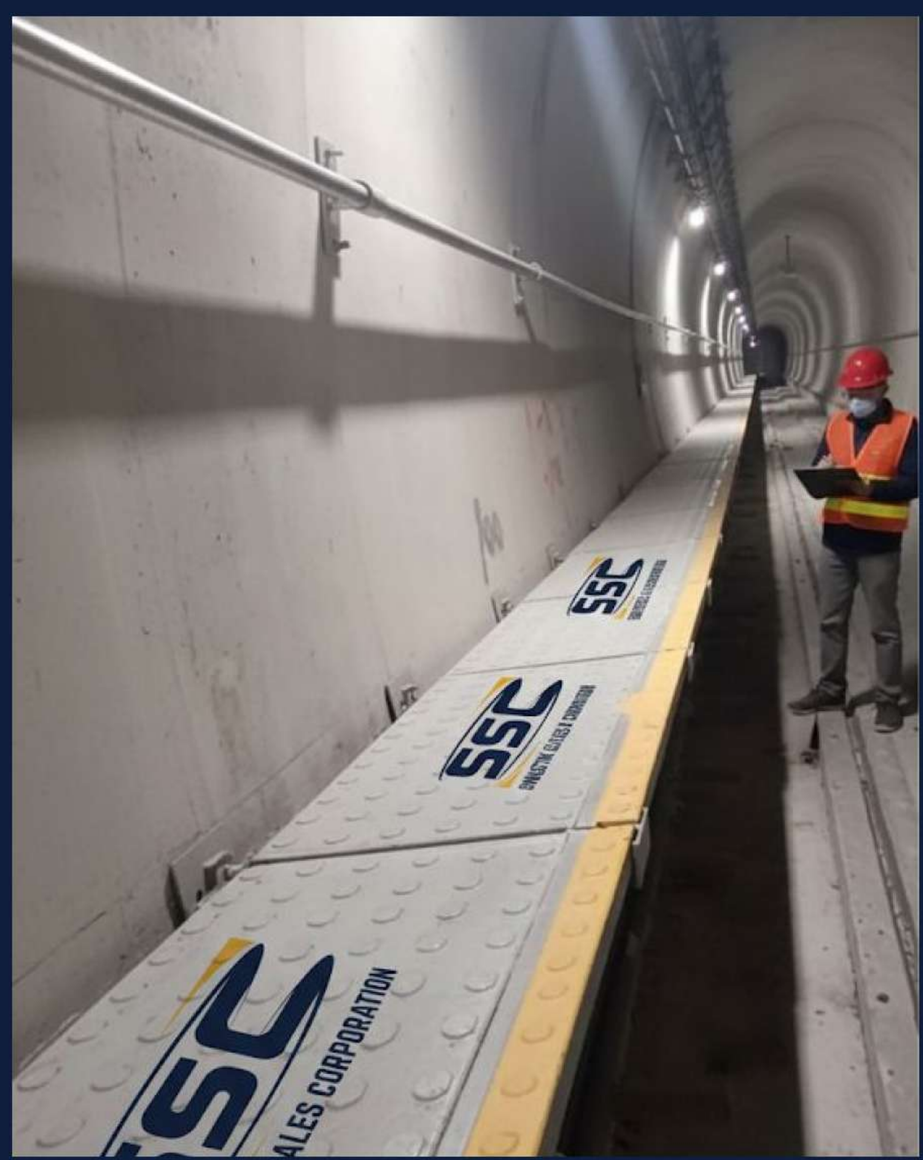

INNOVATIVE SOLUTION

At SSC, innovation is integral to engineering. We continuously evolve our materials, designs, and testing standards to deliver products that outperform expectations and stand the test of time.

TECHNICAL APPROACH

Backed by advanced manufacturing facilities and rigorous quality control, our team's engineering expertise with technology-driven precision to deliver results that meet international benchmarks.

About Us

Established over six decades ago, Swastik Sales Corporation has been a trusted partner in building the world's most ambitious infrastructure. With operations in 15+ countries and a 20-acre manufacturing facility, we bring together legacy, innovation, and engineering excellence to power progress across industries.

Our expertise spans polymer engineering, metal forging, and custom sealing technologies that cater to complex civil and mechanical requirements - driving reliability in every project we undertake.

> **Elevate Your Business To New Height With Our Solutions...**

Chairman's Note

"For over six decades, Swastik Sales Corporation has stood for trust, precision, and performance. Our commitment to engineering excellence continues to drive progress across global infrastructure.

MACHINES

At SSC, precision begins with technology. Advanced moulding, extrusion, and machining units transform polymers and metals into components that define performance and reliability.

Rubber & Plastic Machinery

Injection Moulding

High-precision systems for producing complex thermoplastic components with consistency and strength.

Blow Moulding

Engineered for flawless hollow profiles, containers, and industrial polymer products.

Rubber Extruder

Designed for continuous, uniform extrusion of high-performance rubber profiles and sealing systems.

Metal Machinery

CNC & Machining Centers

Multi-axis CNC, VMC, and HMC units enabling precision shaping and finishing of complex metal components.

Forging & Press Systems

High-tonnage hydraulic and cold press setups ensuring superior structural integrity in every part.

Surface Treatment & Galvanisation

In-house hot-dip and electro-galvanisation units providing corrosion-resistant finishing.

Tooling & Fabrication Units

Custom dies, moulds, and fixtures developed for high efficiency and repeat accuracy.

Integrated Production Facilities

End-to-end setup enabling rapid prototyping, heavy fabrication, and batch manufacturing under one roof.

Our Mission & Vision

At Swastik Sales Corporation, our foundation lies in innovation, precision, and trust. Every product we design is built to contribute toward safer, stronger, and sustainable infrastructure worldwide.

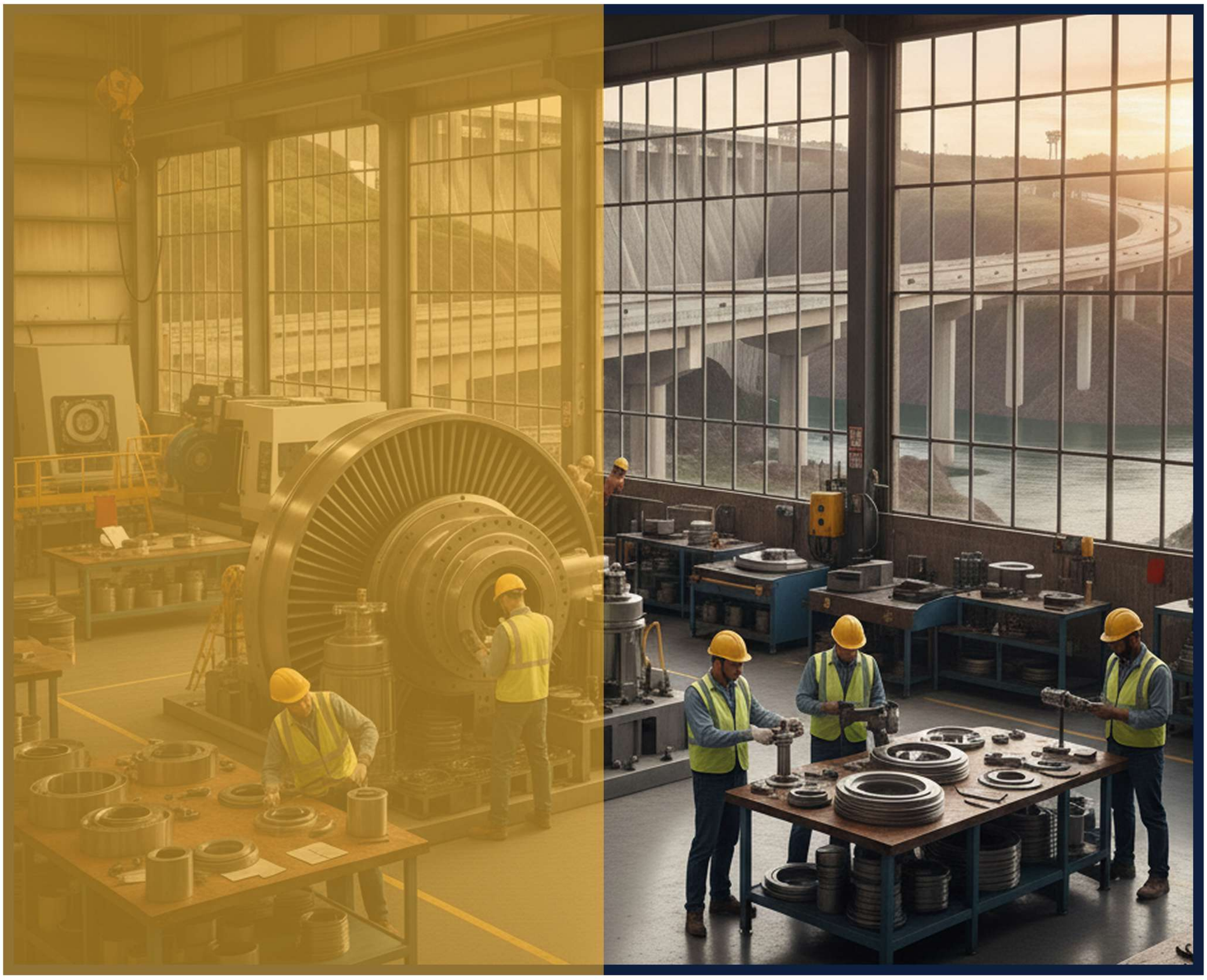

“Innovation and precision are not choices, they’re our responsibility to the world we help build.”

At Swastik Sales Corporation, our journey is defined by purpose and precision. For over six decades, we’ve transformed ideas into engineered realities that power the infrastructure of tomorrow.

Mission

To deliver innovative, reliable, and sustainable engineering solutions that strengthen global infrastructure and inspire long-term progress.

Engineering Excellence

Advanced R&D, automation, and skilled craftsmanship drive the accuracy and endurance behind every SSC component.

Quality Commitment

Through rigorous testing, certified systems, and continuous improvement, we ensure each product exceeds global standards.

Vision

To be a global leader in engineering excellence, shaping a future built on quality, innovation, and enduring possibilities.

GLOBAL FOOTPRINT

Swastik Sales Corporation has successfully exported to 15+ countries, partnering with global leaders in infrastructure and development. Our worldwide footprint ensures timely supply, collaboration, and consistent quality for all projects.

65+
Years of Experience

15+
Countries Customer Footprints

800+
Team Members

20+
Acres of Factory premises

Reaching the World, Building the Future

Our exports and partnerships span key regions across Asia, Europe, the Middle East, and Africa, delivering trusted engineering solutions that power global progress.

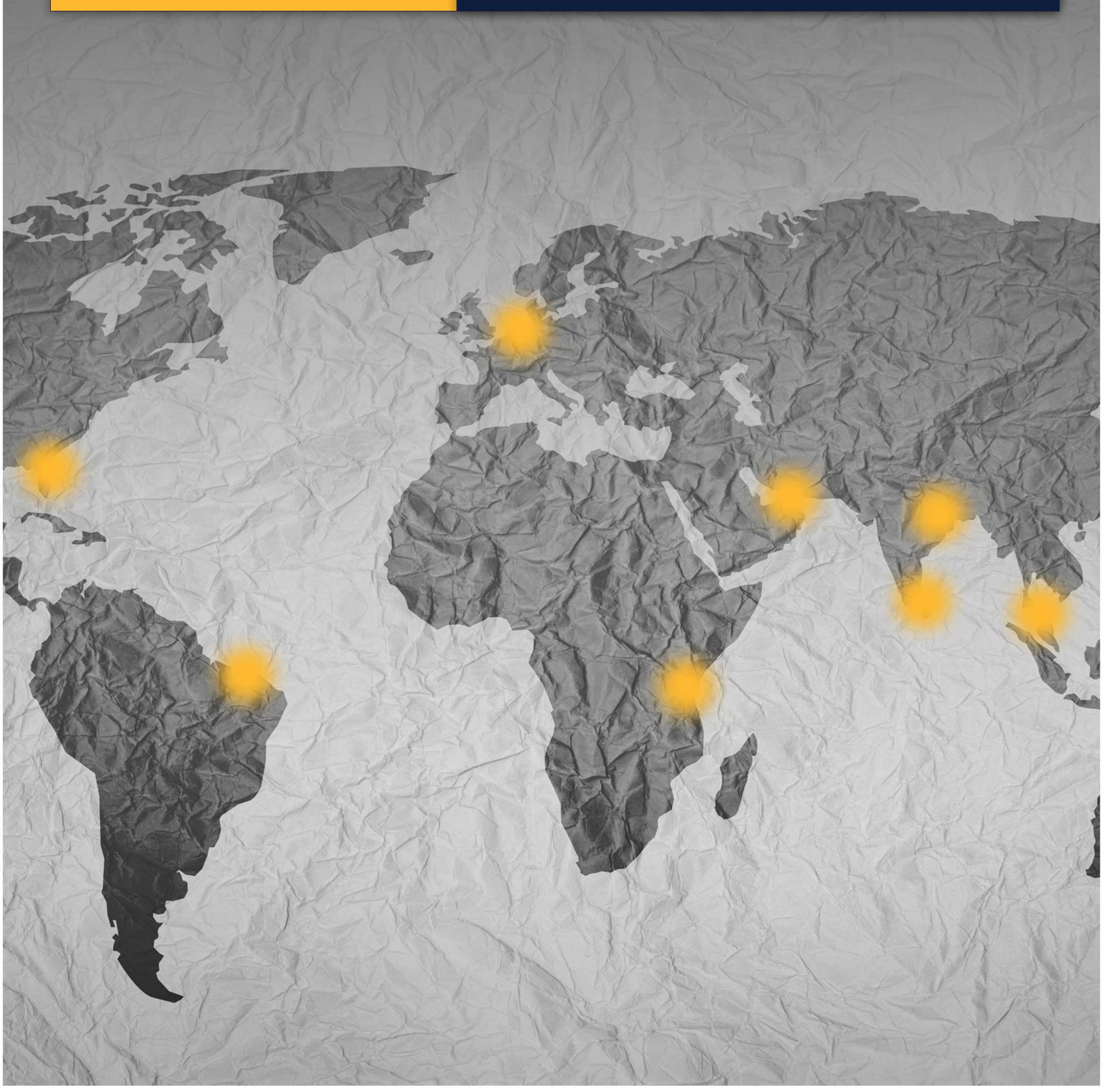

Major Projects Executed

Dul Hasti Hydro Project, Kishtwar

SSC contributed to **Dul Hasti, Salal, Baglihar, Chamera, Kishanganga, Sawalakot, and Uri-II Hydro Projects.**

Salal Hydro Project, Jyotipuram

For the **Udhampur–Srinagar–Baramulla Rail Link Project (J&K)**, SSC delivered precision fittings and elastomeric systems.

Baglihar Hydro Project, Chanderkote

At the Goindwal Thermal Plant, SSC provided heat-resistant components.

Chamera Hydro Electric Project

In the Panipat Refinery Expansion, SSC supplied specialized rubber and metal parts designed to endure chemical exposure, heat, & pressure.

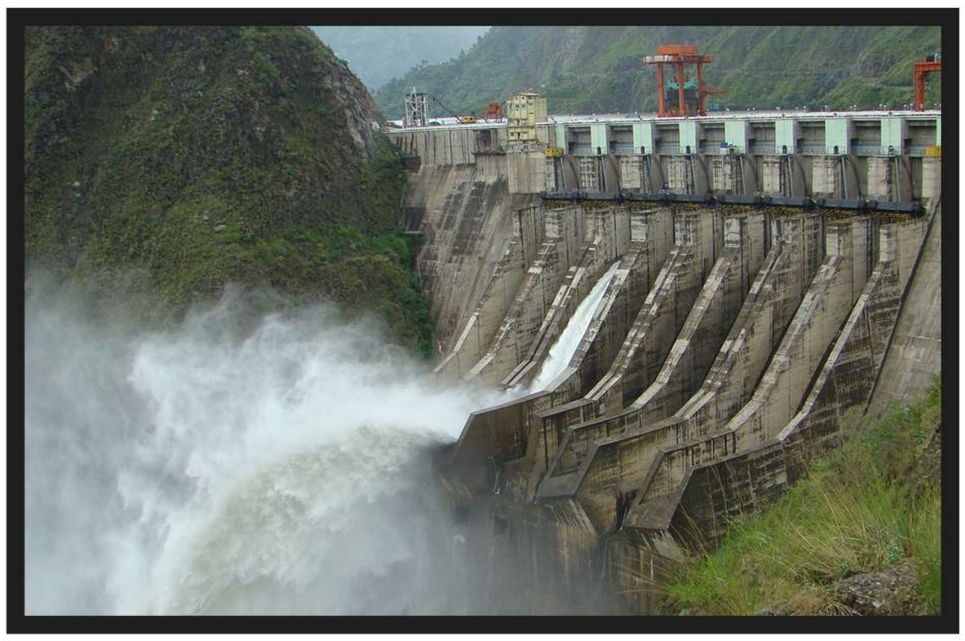

Kishanganga Hydro Electric Project, Bandipore

For the J&K National Highway Project, SSC delivered sealing and expansion systems.

Panipat Refinery Expansion

In the Panipat Refinery Expansion, SSC supplied specialized rubber and metal parts designed to endure chemical exposure, heat, and pressure.

Goindwal Thermal Plant

For the J&K National Highway Project, SSC delivered sealing and expansion systems.

Sawalakot Hydro Project, Dharamkund

SSC contributed to Dul Hasti, Salal, Baglihar, Chamera, Kishanganga, Sawalakot, and Uri-II Hydro Projects..

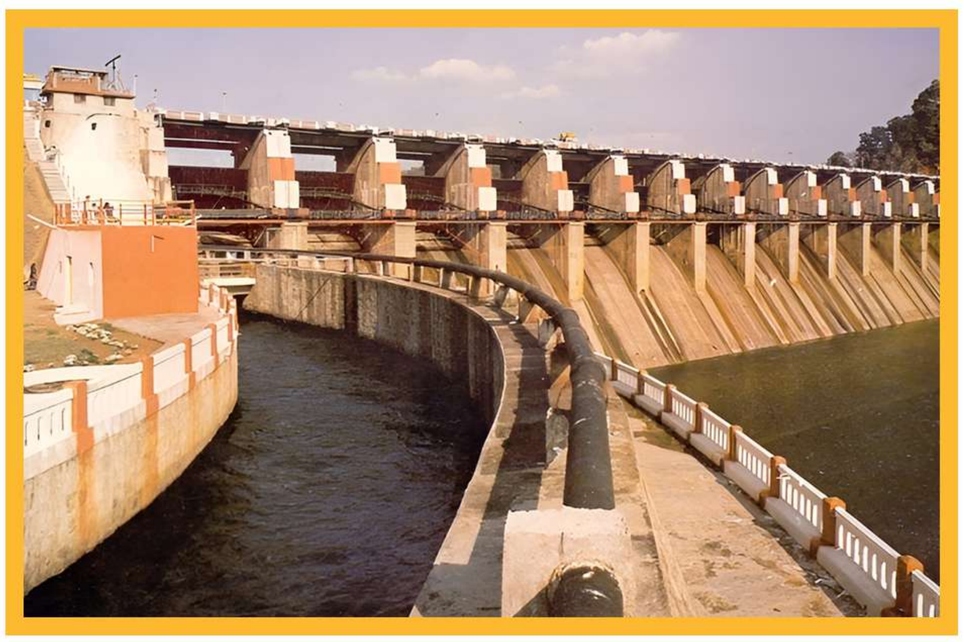

URI-II Hydro Project

SSC delivered precision fittings and elastomeric systems.

Udhampur–Srinagar–Baramulla Rail Link Project

SSC delivered precision and elastomeric systems.

J&K National Highway Project

At the Goindwal Thermal Plant, SSC provided heat-resistant components.

Delhi Metro Rail Corp(DMRC), DC08

For the Delhi Metro Project, SSC supplied way tools and track assemblies ensuring watertight sealing, precise alignment, and lasting performance.

Railway Tunnel-T13, Reasi, J&K

SSC delivered precision fittings and elastomeric systems.

“ EXCELLENCE ISN’T ABOUT SUPERVISION; IT’S ABOUT STANDARDS THAT STAY HIGH, EVEN WHEN UNOBSERVED.

Our Clients

Navayuga Engg. Co. Ltd.

Indian Airforce

Gammon India Ltd.

Kon Karn Railway

GVK Power

Jaypee Group

NHPC Ltd.

Larsen & Toubro Ltd.

HCC ltd.

Toyo Construction Company Ltd.

Afcon Infrastructure Ltd

International Tractort Ltd.

ABC Paper Mills

JCT Limited

ACC Cement

Chenab Construction Company

Power Grid Corporation

Leighton Welspun Contractors Ltd.

Beacon

IRCON

J Kumar InfrA

Venser Construction Company

Railways & Metros

For over six decades, SSC has been a trusted partner in strengthening rail and metro infrastructure. Our precision engineered components ensure safety, stability, and long-term reliability across every track.

Railway Trolleys & Material Handling

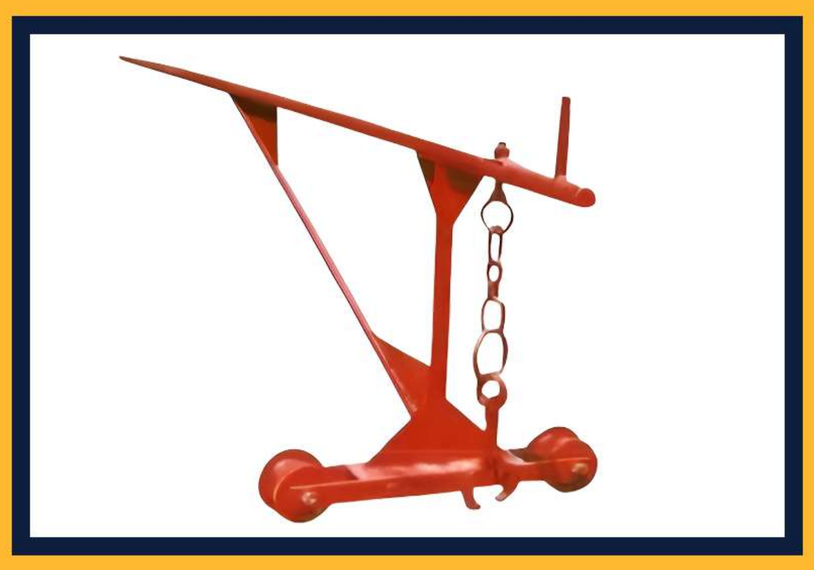

Rail Dolly

Mono Rail cum Road Trolley

Self-Propelled Motor Trolley

Railway Material Trolley

Dip Lorry

Push Trolley (BG)

P. Way Tools & Maintenance Equipment

Double Ended Spanner (36x41)

Box Spanner for Rail Screw

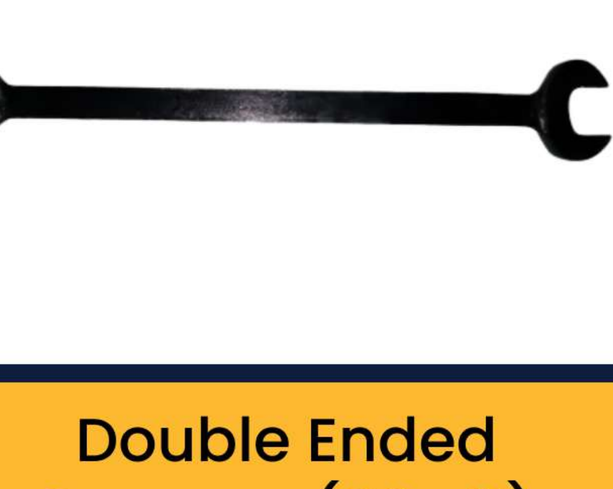

Tommy Bar

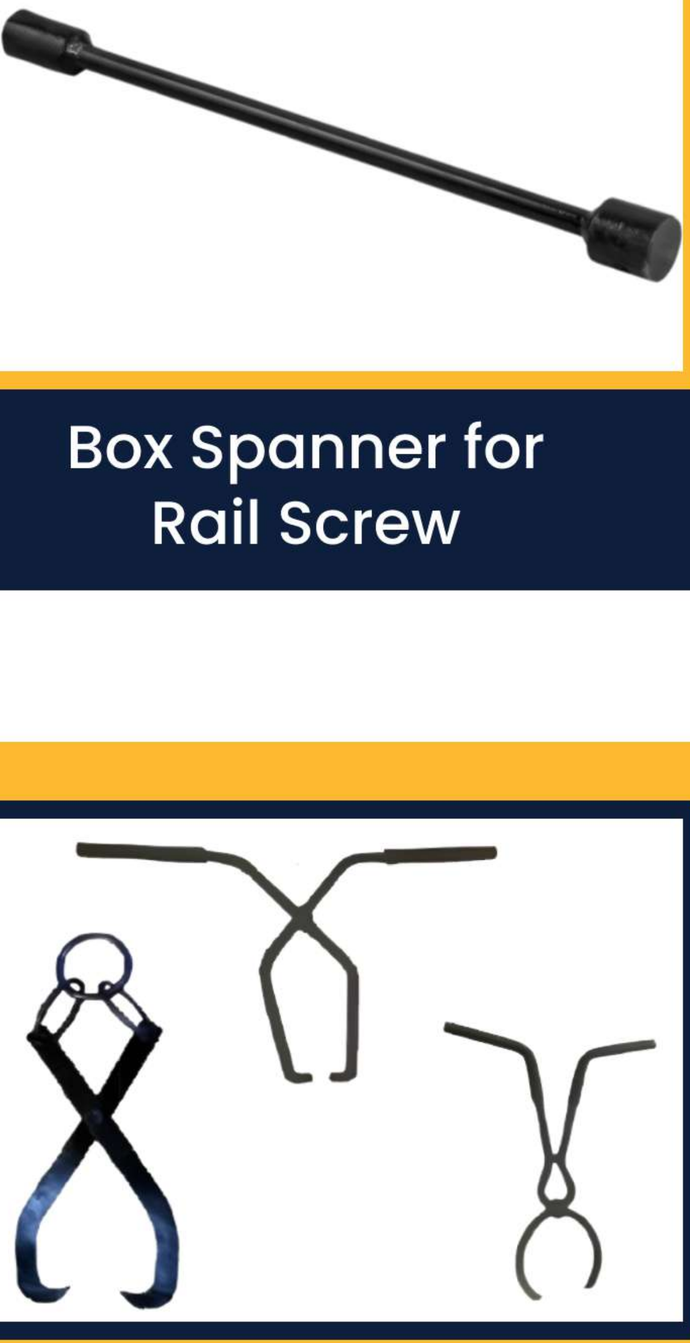

Rail Tong / Sleeper Tong

Crow Bar

Rail Skid

P. Way Tools & Maintenance Equipment

Point Screw Clamp

Track Jack (15 Ton)

Wire Basket

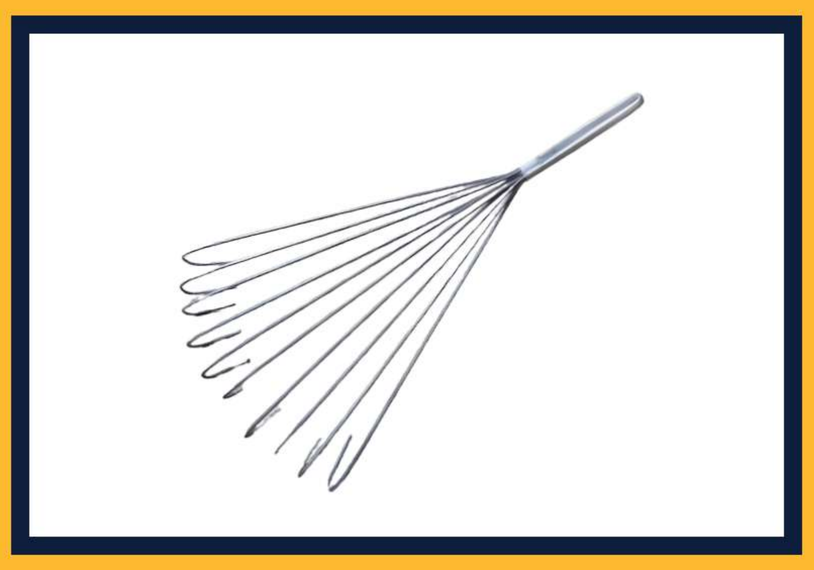

Wire Claw

Rail Roller

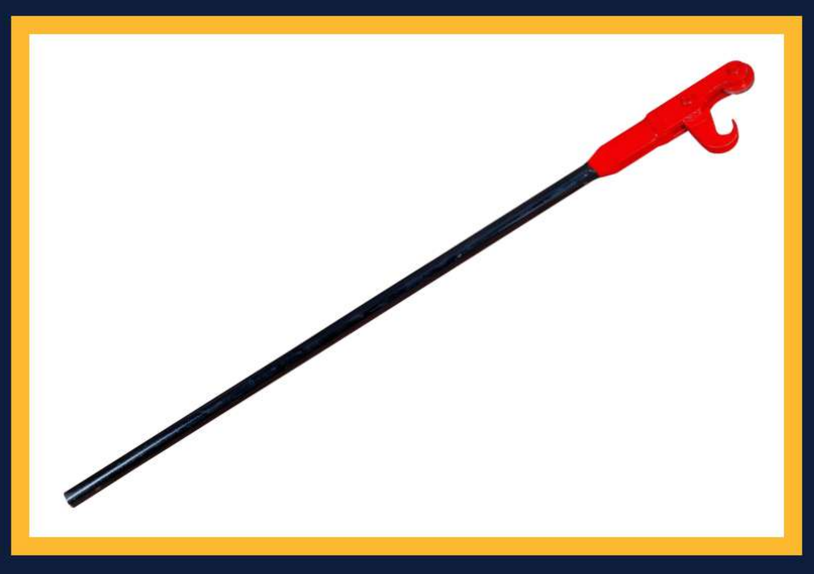

ERC Extractor

P. Way Fittings & Track Assemblies

Steel Channel Sleeper Fittings

P. Way Nut Bolts

MS Clamps for Fish Plate

Grooved Rubber Sole Pad

Spring Point Lever Box with Pull Rod

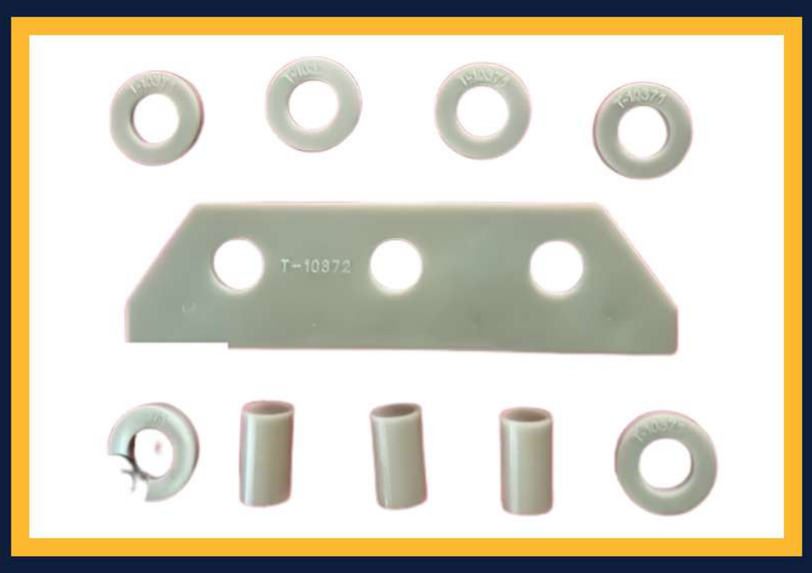

Track Insulation Items

P. Way Fittings & Track Assemblies

GFN Liner

ERC Clips

Stretcher Bar

Tie Plate

Bearing Plate

Point Locking Bolt

Track Machines & Welding Equipment

Rail Drilling Machine
(HONDA GX160)

SKV Welding Kit
(52 / 60 Kg Rail)

Track Drill Machine
(Cycle Type)

Rail Profile Grinder Frame
(With AG9 Grinder)

Abrasive Rail Cutter
(HONDA GX200)

Air Blower for AT
Welding

Railway Signage & Safety Boards

Whistle Board
(W/L & Ce/Fa)

Speed Indication / Breaker / Termination Boards

Caution Indication Board / Stop Indicator Board

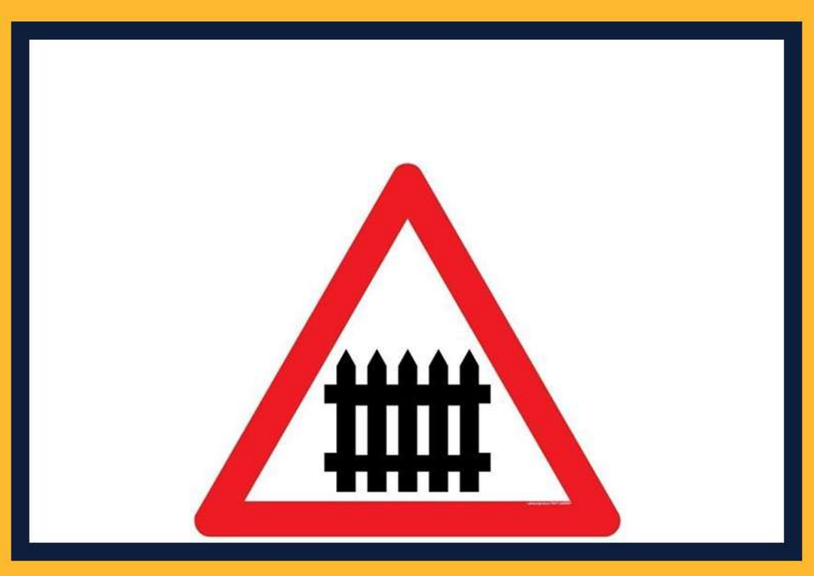

Manned & Unmanned Level Crossing Boards

Station Name Boards

Shunting Limit Board

Tunnels & Dams

For over six decades, SSC has been a trusted partner in advancing tunnel and dam infrastructure. Our precision-engineered systems ensure watertight performance, structural strength, and lasting reliability in demanding conditions.

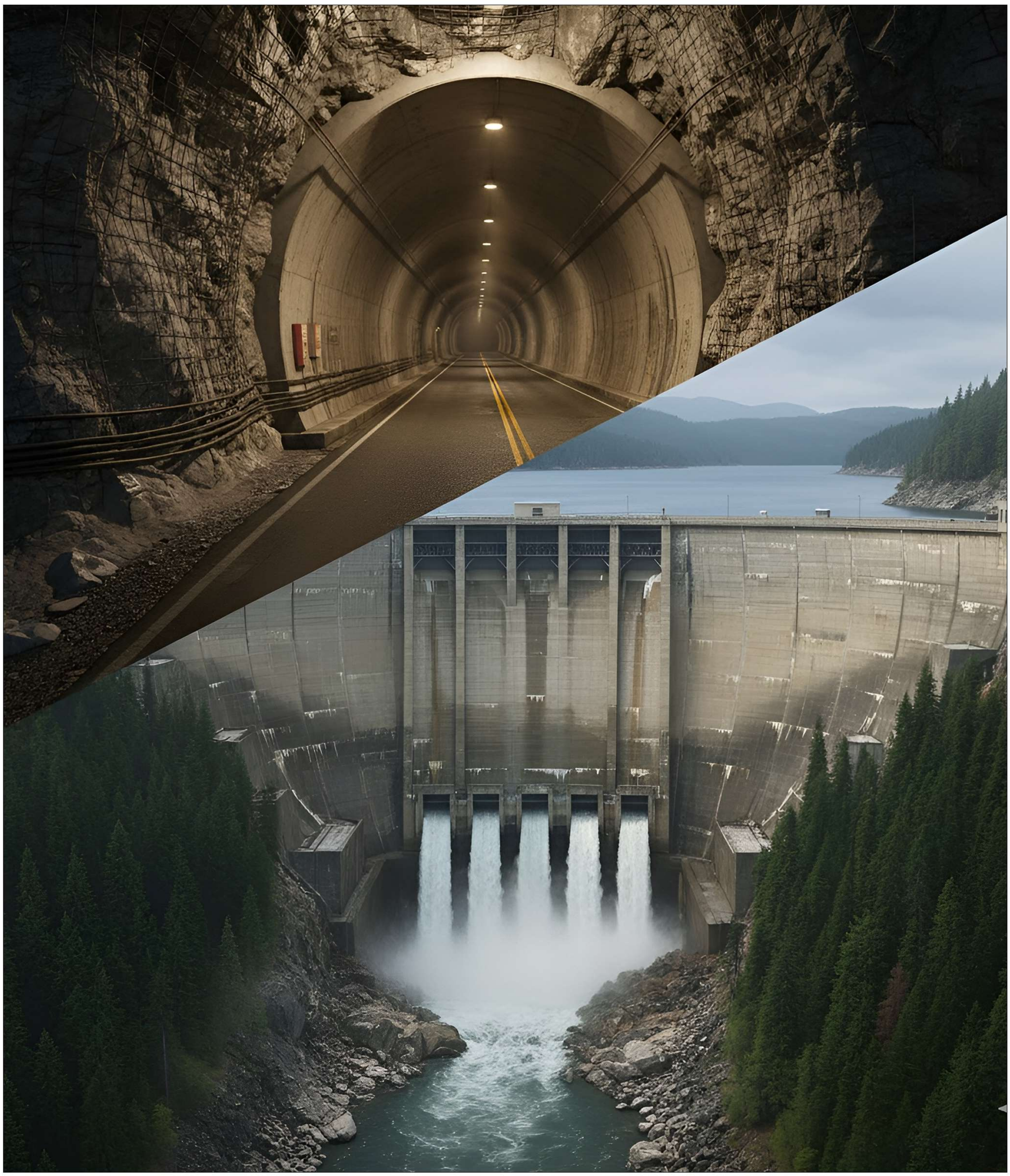

SEALING SYSTEMS & GASKETS

Precision-sealed for life. SSC's gasket systems ensure watertight integrity in tunnels and hydro structures under pressure. Made from advanced elastomers, each profile delivers a durable, lasting seal.

120+ Year Life Performance

Custom Geometry Fit

Global Project Proven

SOFT CORNER TECH.

Corner 90°

Acute

Obtuse

Z -Axis

SSC's Soft Corner Technology eliminates stress concentration in segment joints by preventing solid rubber buildup at corners. This enables uniform compression and smooth segment closure—minimizing cracking, spalling, and leakage while enhancing the gasket's lifespan.

Cast-In Gaskets

Precision-moulded EPDM profiles embed into concrete to form lasting watertight seals. Their leg design anchors firmly, preventing movement during installation.

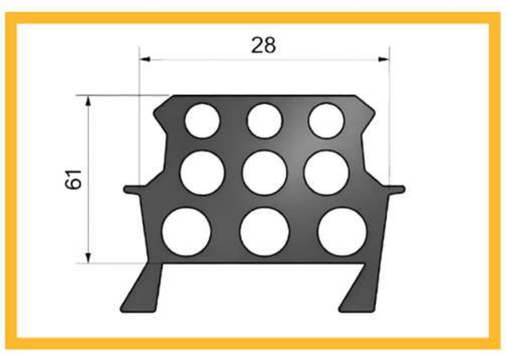

SSC028CI

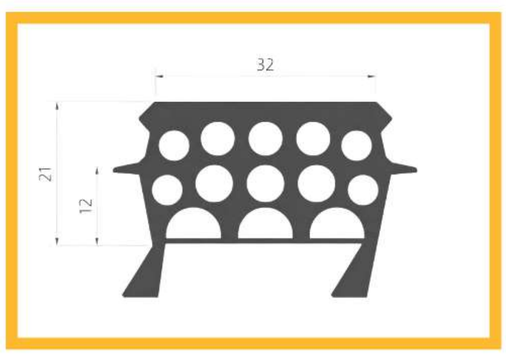

SSC035CI

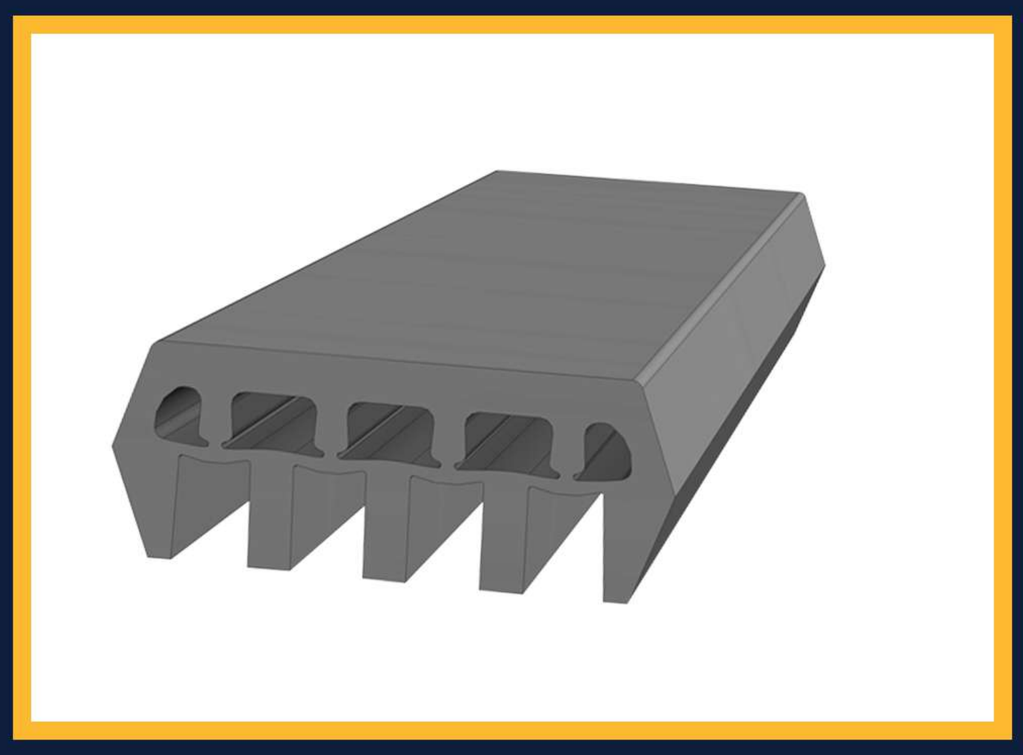

Glued-In Gaskets

Made for pre-formed grooves in tunnel or dam segments, it offers excellent compression recovery and consistent sealing under pressure, ensuring reliability in transport and water tunnels.

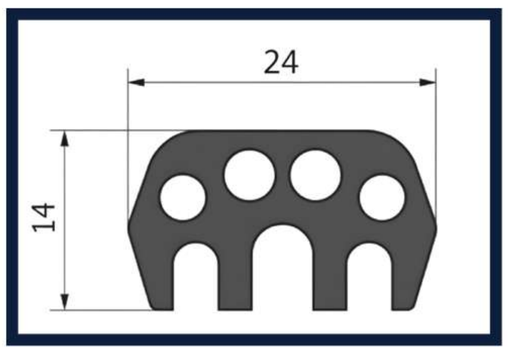

SSC024

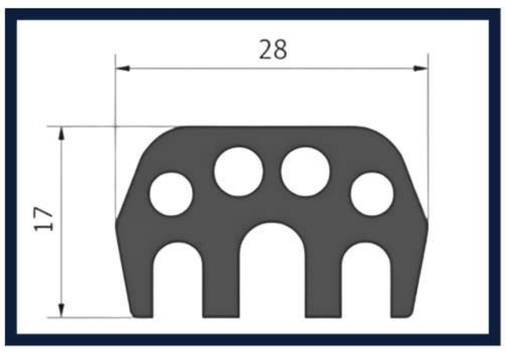

SSC028

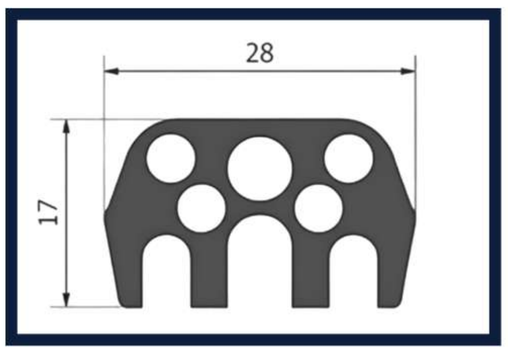

SSC028LHT

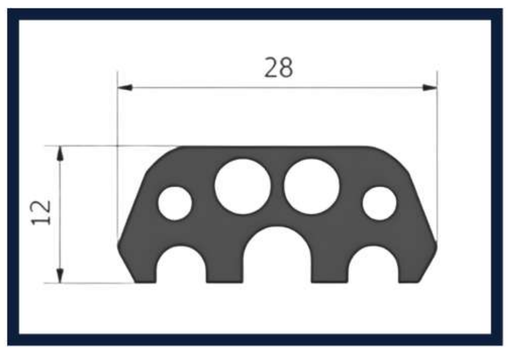

SSC028H

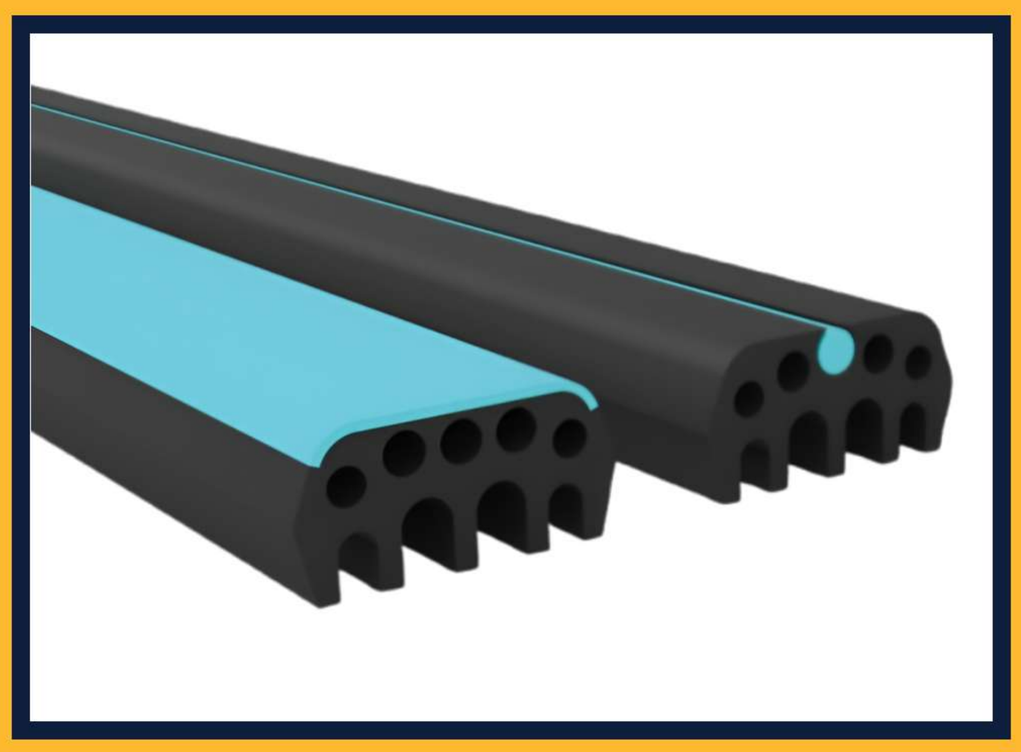

Hydrophilic Gaskets

Hybrid seals combine elastomeric and water-reactive materials that expand on moisture contact to fill micro-gaps and stop leaks. Offered in insert or bonded types.

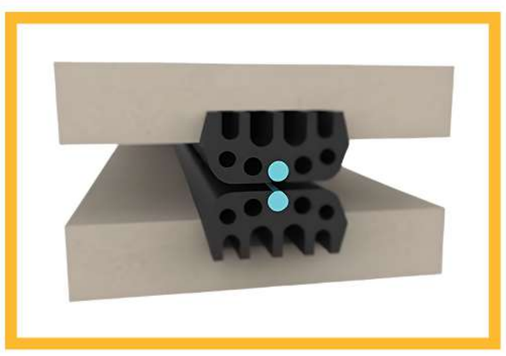

Insert Type

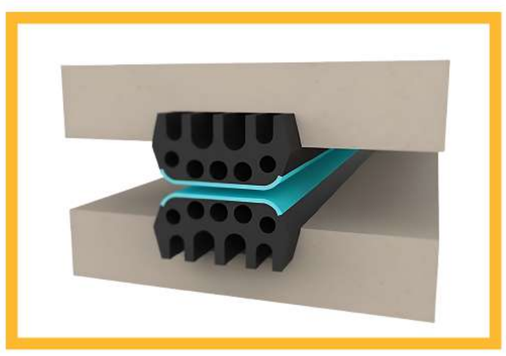

Bonded Type

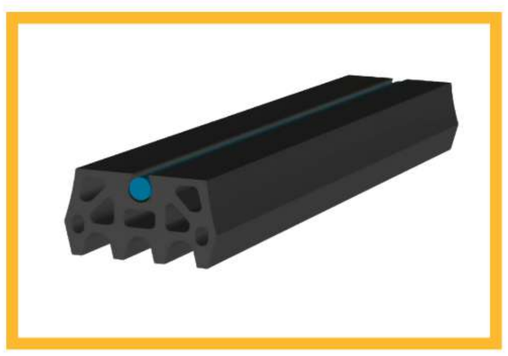

H-Cord Type

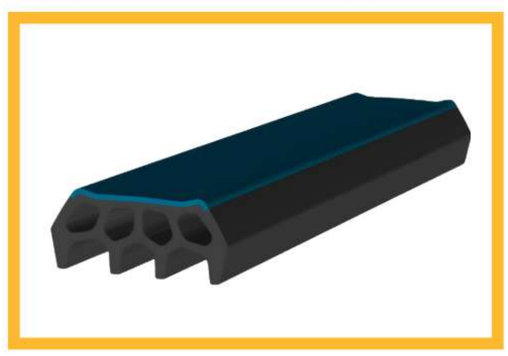

H-Strip Type

Waterstops & Hydrophobic Seals

Expanding rubber profiles for cold joints and transition zones that react to moisture to block seepage ideal for galleries, spillways, and retaining structures.

EPDM Waterstop

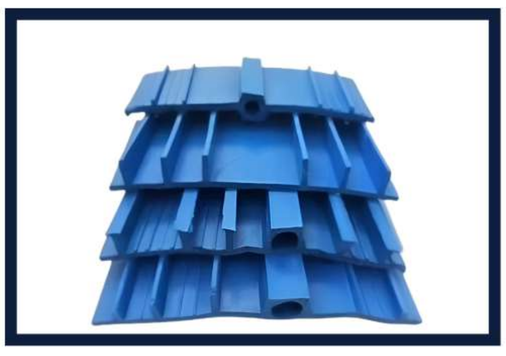

PVC Waterstop

Hydrophobic Strip

Corner Junction Unit

Compression
Moulding Pads

Rubber Extruded
Profiles

Anchor Groove
Fillers

Rubber Testing
Specimens

Compound
Formulation Plugs

Adhesive Bond
Primers

Joint Protection Caps

Global standards, Indian manufacturing strength.

Mechanical Behavior and Waterproof Performance of Longitudinal Section of Tunnel Segment Joint Gasket

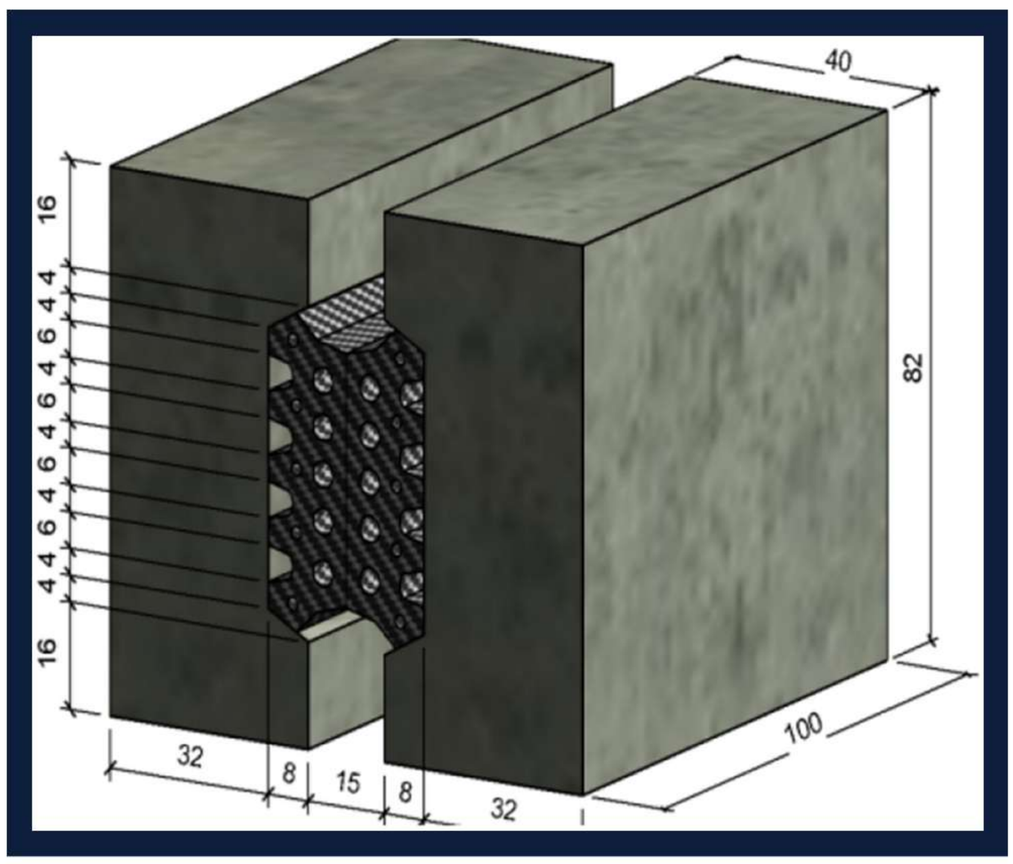

Gasket depends not only on its own contact area, linear compression stiffness, and Poisson's ratio but also on the height of the segment joint specimen and the amount of joint opening caused by the sinking offset angle.

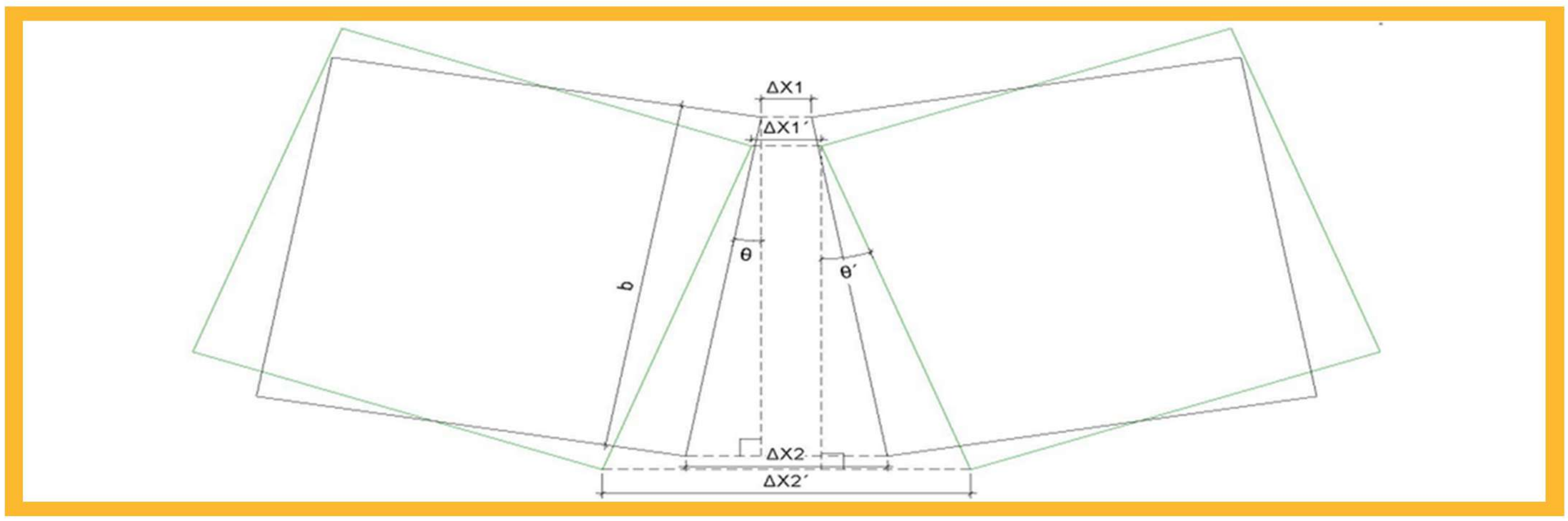

Schematic diagram of upper and lower openings of segment structure joints.

Connecting & Structural Components

Strength that holds structures firm. SSC's connecting systems ensure precise alignment, joint stability, and watertight performance. Built for endurance, these components unite strength with precision.

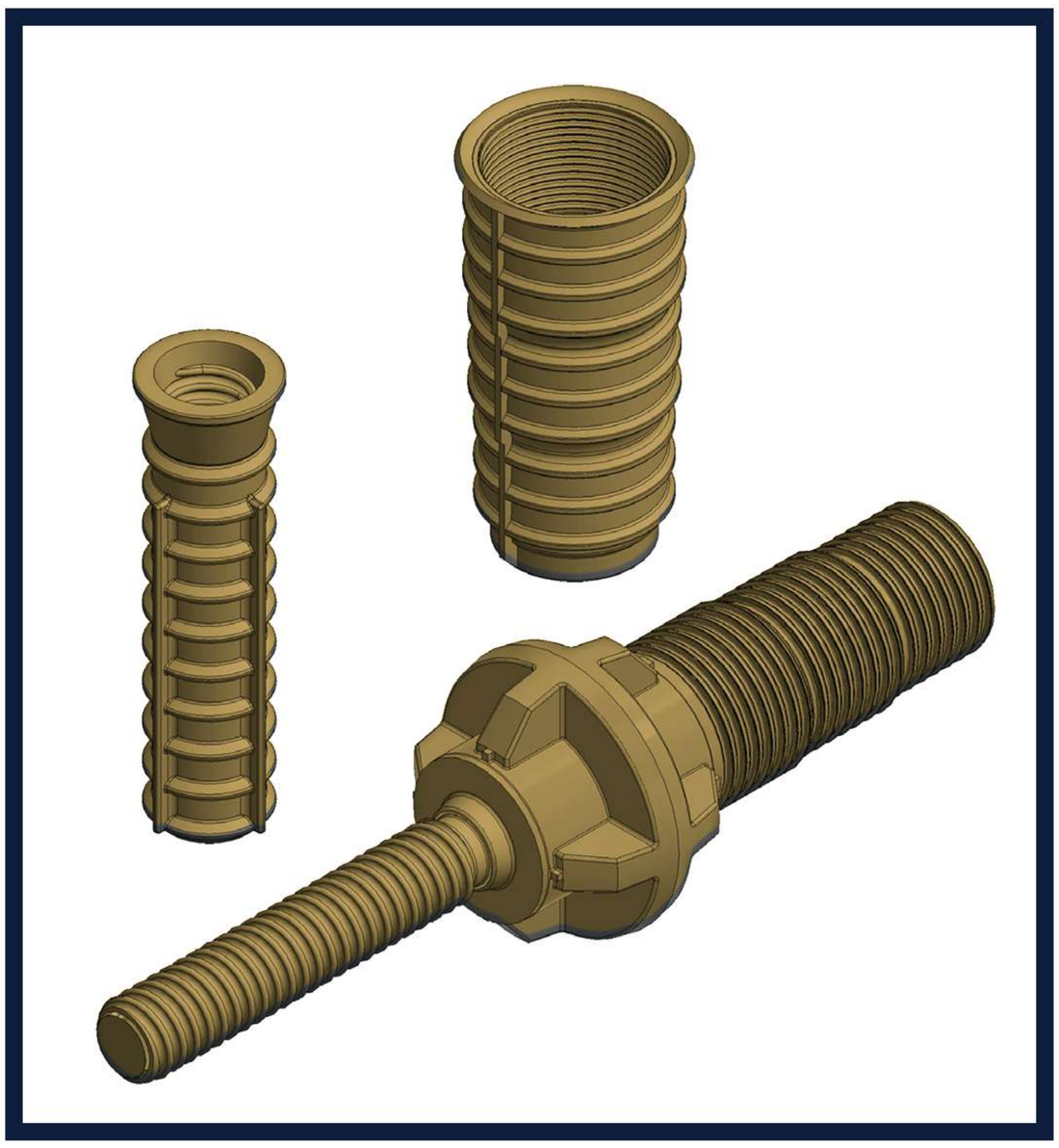

Precision Alignment

Watertight & Vibration-Proof

High Structural Load Capacity

Gripping (Heeled Tooth) Tech.

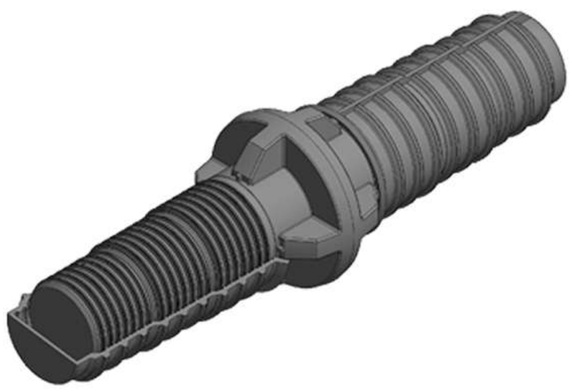

SSC's Gripping Technology uses micro-tooth locks to strengthen bonds between sockets and segments, reducing slip and displacement for lasting stability.

Guidance Rods

Extruded plastic rods ensure precise alignment of tunnel or dam segments. Glued or clipped into grooves, they maintain tight tolerances and prevent concrete damage.

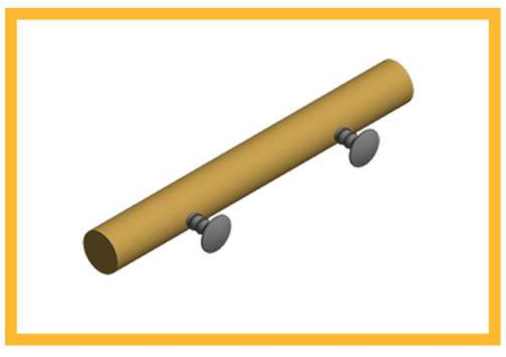

With Clip

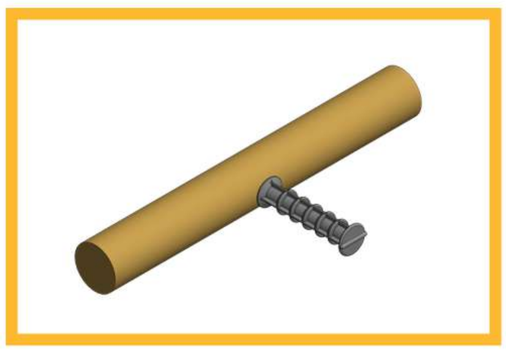

With Screw

With Hole

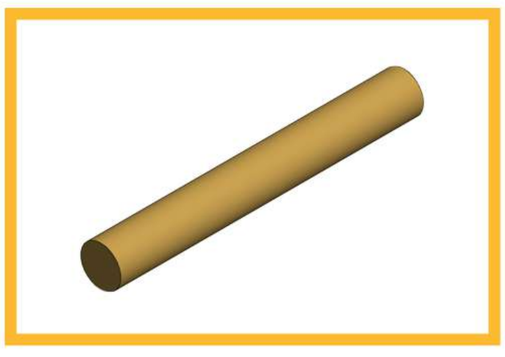

Filled

Connecting Sockets & Bushes

High-strength polymer or alloy connectors ensure alignment and watertight joints between precast segments, available in threaded, ribbed, or snap-fit types.

Threaded

Ribbed

Locking Type

Snap-Fit

Smart Blocks & Variants

Engineered interlocks secure tunnel segments and evenly distribute axial loads. Available in various formats for transport and water-retaining structures.

Male Block

Female Block

Screw Type

Breakaway Type

Bi-Cone Bushings

Dual-cone seals ensure gas- and watertight cable entry in tunnel and dam ducts. The tapered design reduces friction and vibration while maintaining sealing integrity under pressure.

Polymeric Type

Metallic Type

Cable Entry Adaptors

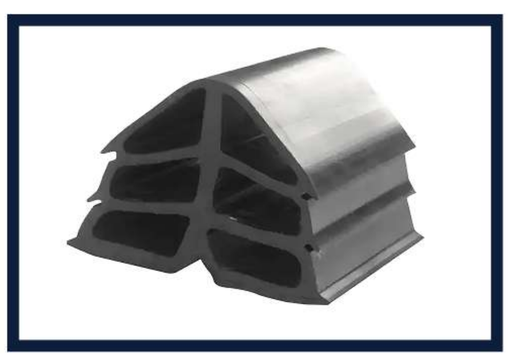

Compression Seal Kits

Threaded Sockets

Heavy-duty threaded inserts used for lifting, joining, and alignment of precast segments. Available in different thread types and depths for varied structural requirements.

T20

T25×170

M10

Custom Variants

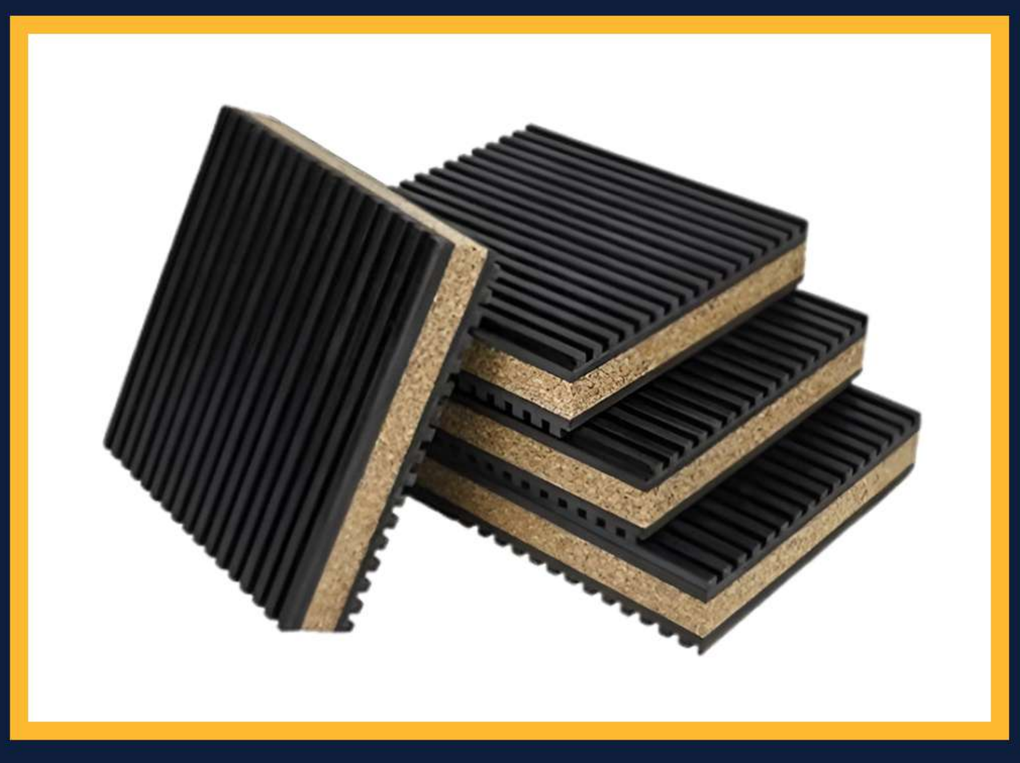

Rubber Liners & Anchor Pads

Elastomeric liners absorb vibration and shear, ensuring flexibility, corrosion resistance, and reinforcement protection.

Flat Liners

Grooved Liners

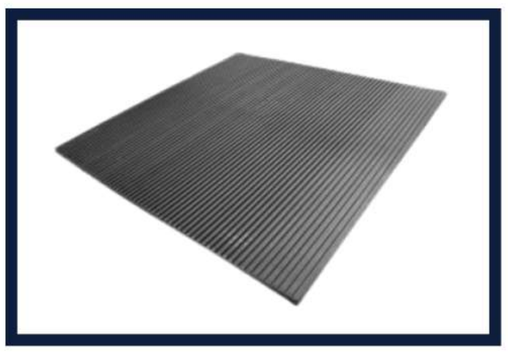

Anchor Pads

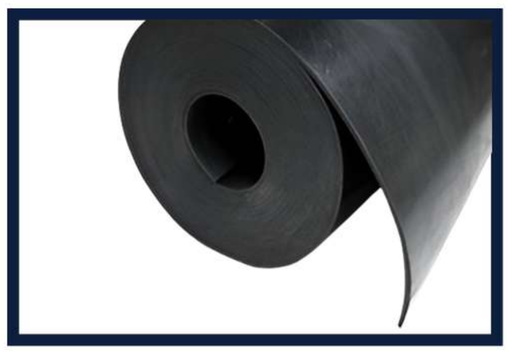

Bearing Interface Sheets

Anchor Inserts

Steel Fittings & Bolts

Washer & Nut Assemblies

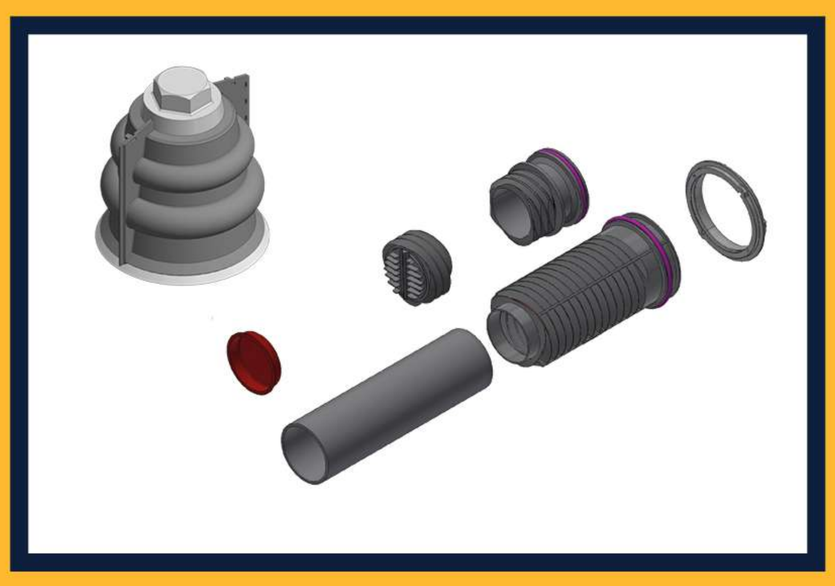

Injection & Lifting Systems

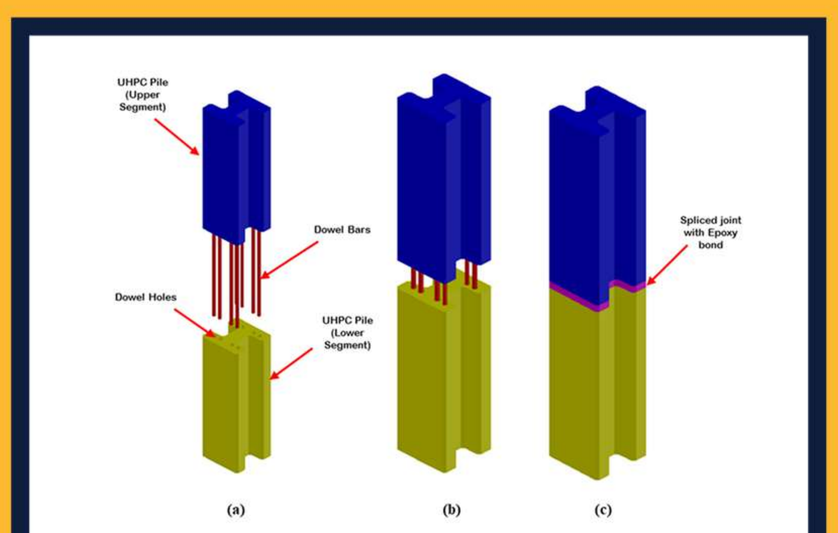

Segment Positioning Dowels

Alignment Bushes

Spacer Blocks

Mounting Pins & Sleeves

Performance Analysis of Different Radial Joint Shapes in Segmental Tunnel Lining

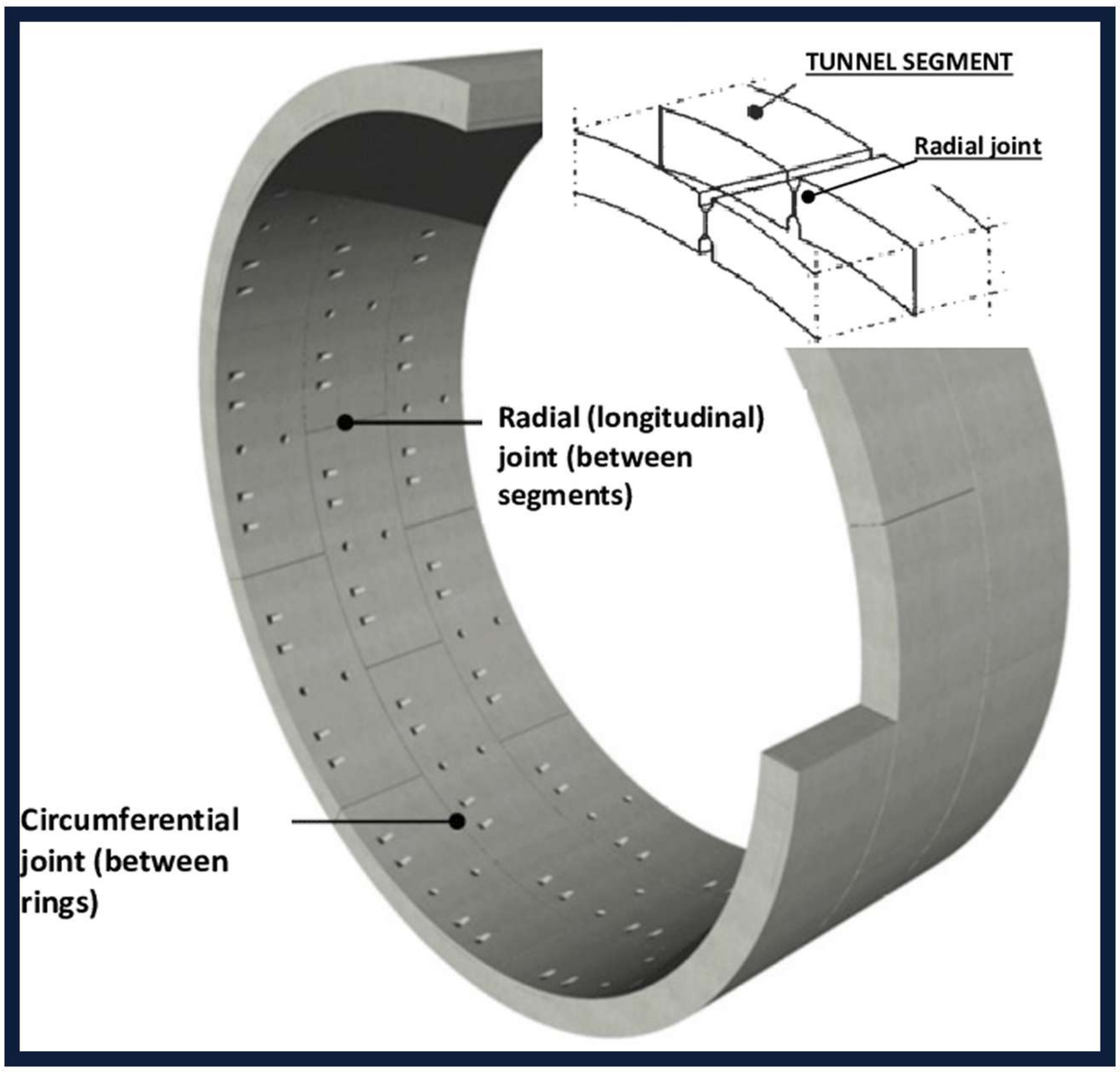

the contact joint between segment to segment in a segmental ring, is chosen and designed in the form of either flat or curved shape. From technical and economical points of view, applying design criteria for the most suitable shape of radial joint plays a major role in dimensioning of segmental tunnel lining.

WALKWAYS, DRAINAGE & SAFETY SYSTEMS

Built for safety, made for durability. SSC's walkway and drainage systems ensure secure movement and efficient water flow. Designed for endurance, they keep operations safe in all conditions.

Slip-Resistant Design

Corrosion-Proof Construction

Integrated Safety

ANTI-SLIP SURFACE TECH.

SSC's Anti-Slip Technology uses serrated treads and grids to improve traction and drainage, ensuring stable footing in tunnels and spillways.

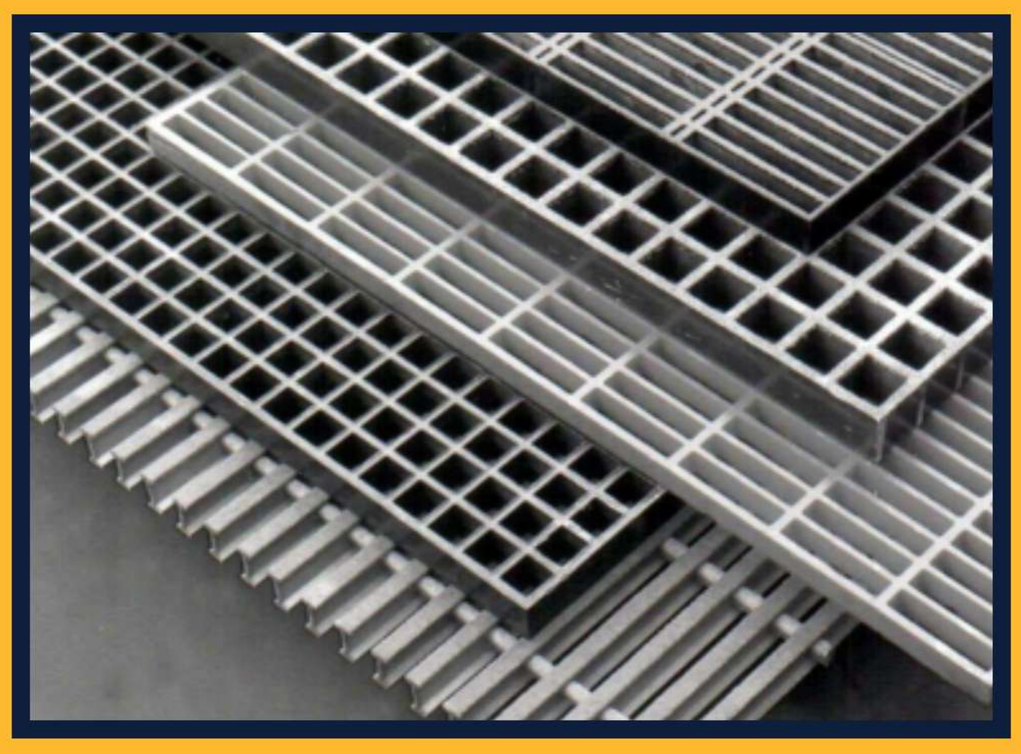

Gratings

Durable anti-slip gratings for drainage, spillways, and maintenance paths. Made from aluminium, stainless, or galvanized steel(304/316), they offer corrosion resistance and high load capacity.

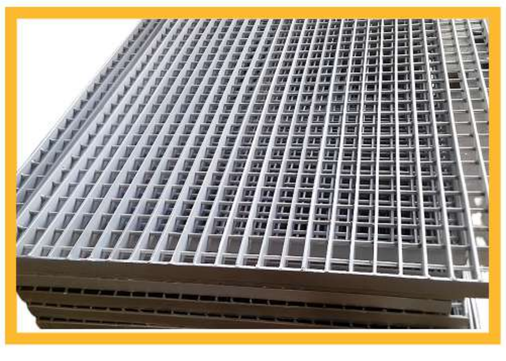

Aluminium Grating

Stainless Steel Grating

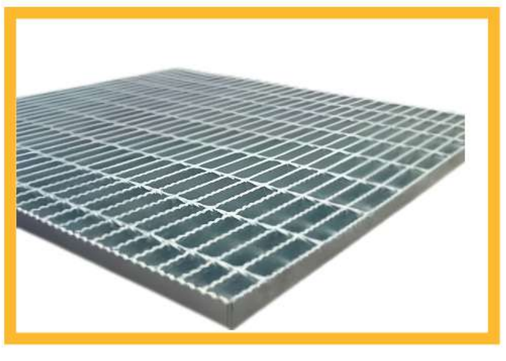

Galvanized Steel Grating

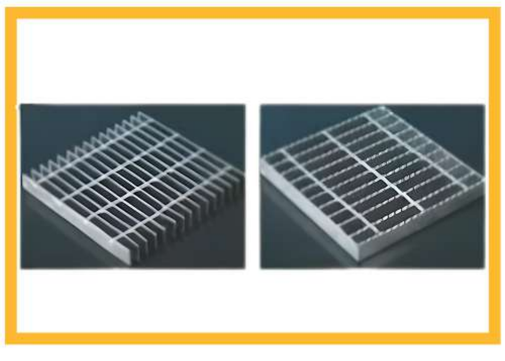

Serrated / Plain Surface Options

Walkways & Platforms

Slip-resistant aluminium and steel walkways ensure safe access in tunnels, galleries, and inspection zones. Built for heavy loads with lightweight, easy installation.

Emergency Walkways

Maintenance Platforms

Inspection Decks

Access Bridges

Drainage Channels

Custom drainage systems enable quick water discharge from tunnels, galleries, and spillways, featuring removable gratings for easy inspection and cleaning.

Channel Frames

Grated Covers

End Outlets

Inspection Ports

Sign Boards & Indicators

Operational and safety signage offers clear direction and hazard warnings in tunnels, galleries, and dam sites, made with reflective materials meeting safety standards.

Speed & Warning Boards

Directional Signage

Level Crossing Boards

Emergency & Safety Systems

Integrated systems ensure safety during maintenance or emergencies. Non-slip walkways, guard signage, and hazard markings enable quick, reliable escape and access.

Safety Walkway Units

Guard Rails

Illumination & Safety Markers

"Push-Pull" Ventilation System in Case of Fire in a Tunnel

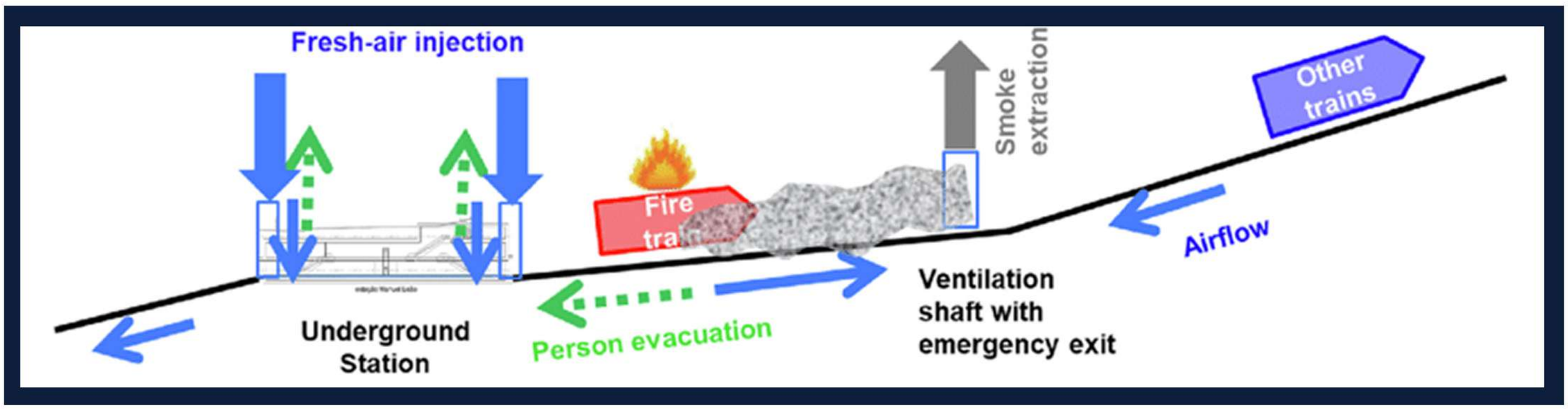

Handrails /
Rail Guards

Inspection
Ladders

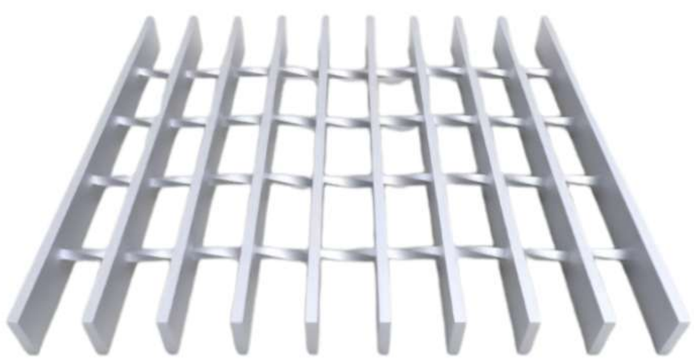

Floor Grate
Frames

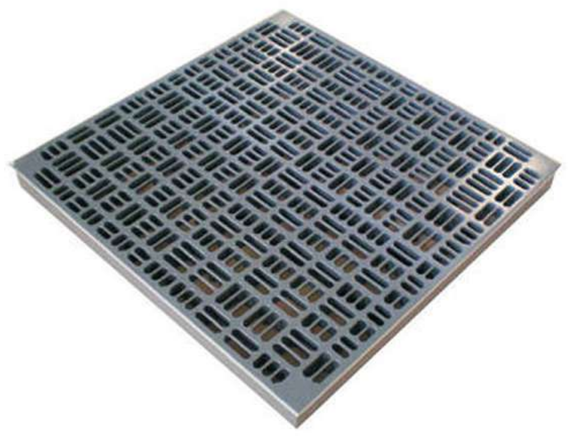

Drain Covers &
Panels

Warning Tape
Panels

Platform Edge
Protectors

Non-slip Floor Strips

Reflective Marking Plates

S-Curved Controlled Drainage System

Engineered to manage water flow efficiently within tunnel and infrastructure projects, the S-Curved Controlled Drainage System ensures precise discharge and pressure regulation. Its curved channel design minimizes turbulence, enhances durability, and provides long-term protection against seepage and structural stress.

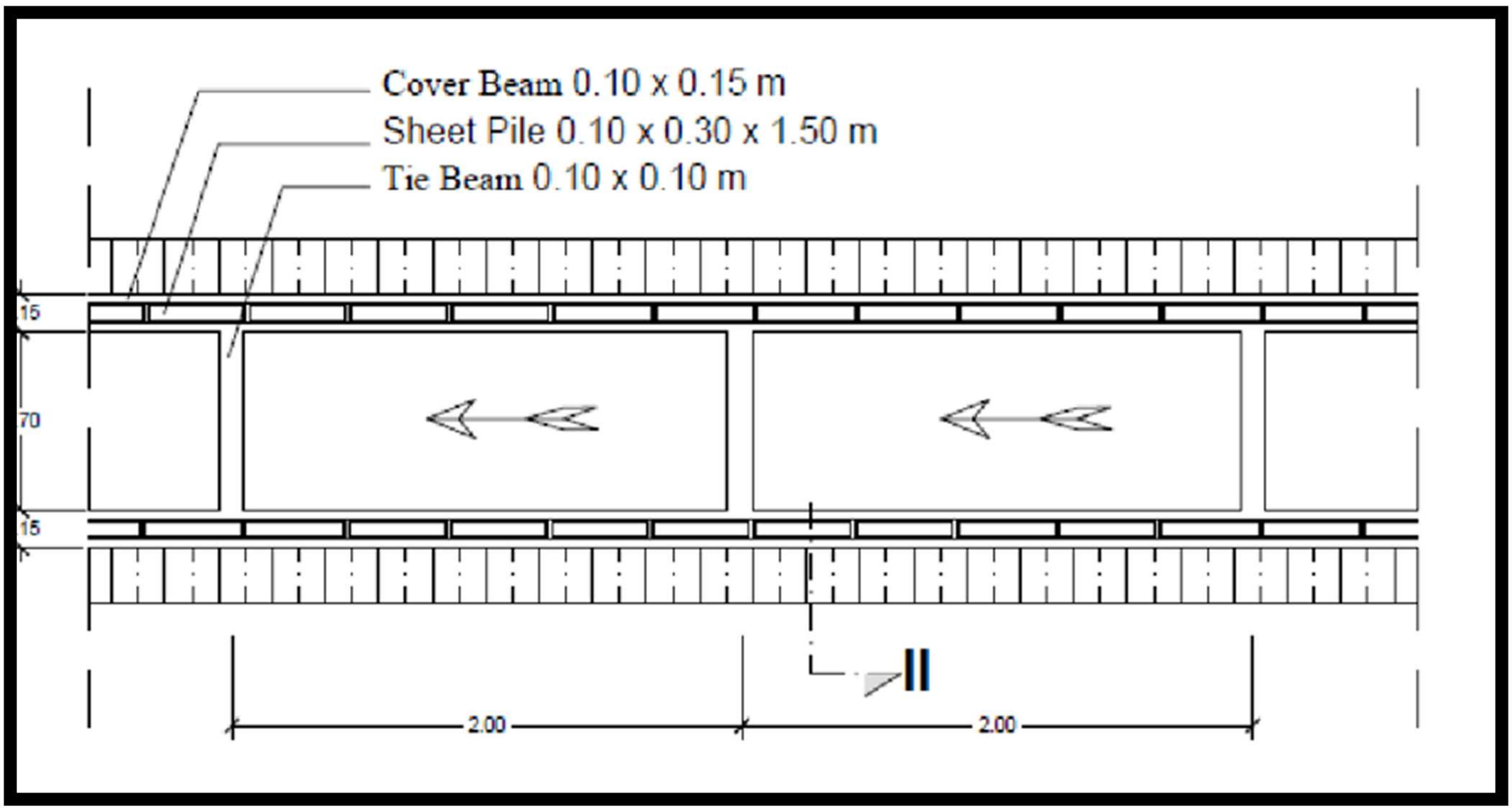

Bridges & National Highways

For over six decades, SSC has been a trusted partner in building durable bridge and highway infrastructure, delivering precision-engineered components for lasting strength and stability.

Prestressing & Anchorage Systems

Bridges rely on tension for strength. SSC's prestressing systems ensure reliability with precision anchorage, sheathing, and wedges for efficient, corrosion-resistant, long-lasting performance.

High Load Retention

Corrosion Protection

Accurate Stress Transfer

Post-Tensioning Technology

SSC's Post-Tensioning System combines multi-strand anchorage with smooth or corrugated HDPE sheathing, designed for efficient force transfer and stress control. The system complies with global bridge construction standards and supports both bonded and unbonded configurations.

HDPE Sheathing Pipes

Smooth and corrugated HDPE ducts used for encasing steel tendons in post-tensioned concrete structures. Designed for flexibility, ease of installation, and superior corrosion protection.

Corrugated HDPE Duct

Smooth Duct

Bonded / Unbonded Type

Coupler Assemblies

Anchor Head & Anchor Cone

Anchorage assemblies anchor prestressing strands and transfer load to concrete, ensuring secure stress distribution and high fatigue resistance.

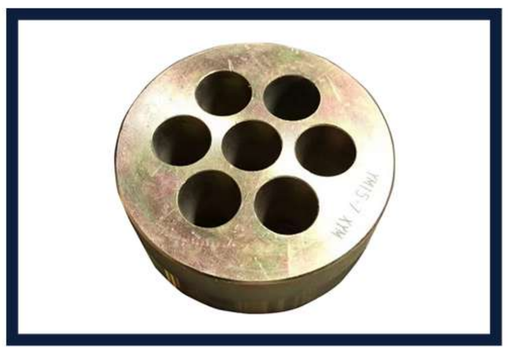

Multi-Strand Anchor Head

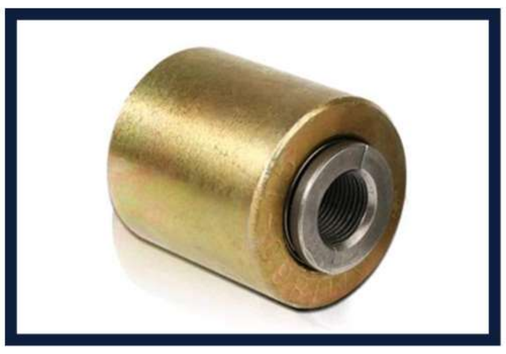

Single-Strand Type

Anchor Cone

Bearing Plate

Wedges

Hardened alloy steel wedges used to grip prestressing strands securely within the anchorage system. Tested for ultimate pull-out strength and repeat tensioning accuracy.

2-Part Wedge

3-Part Wedge

Custom Angle Profiles

Anti-Slip Coated Type

External Prestressing Bridge Reinforcement Technology Review

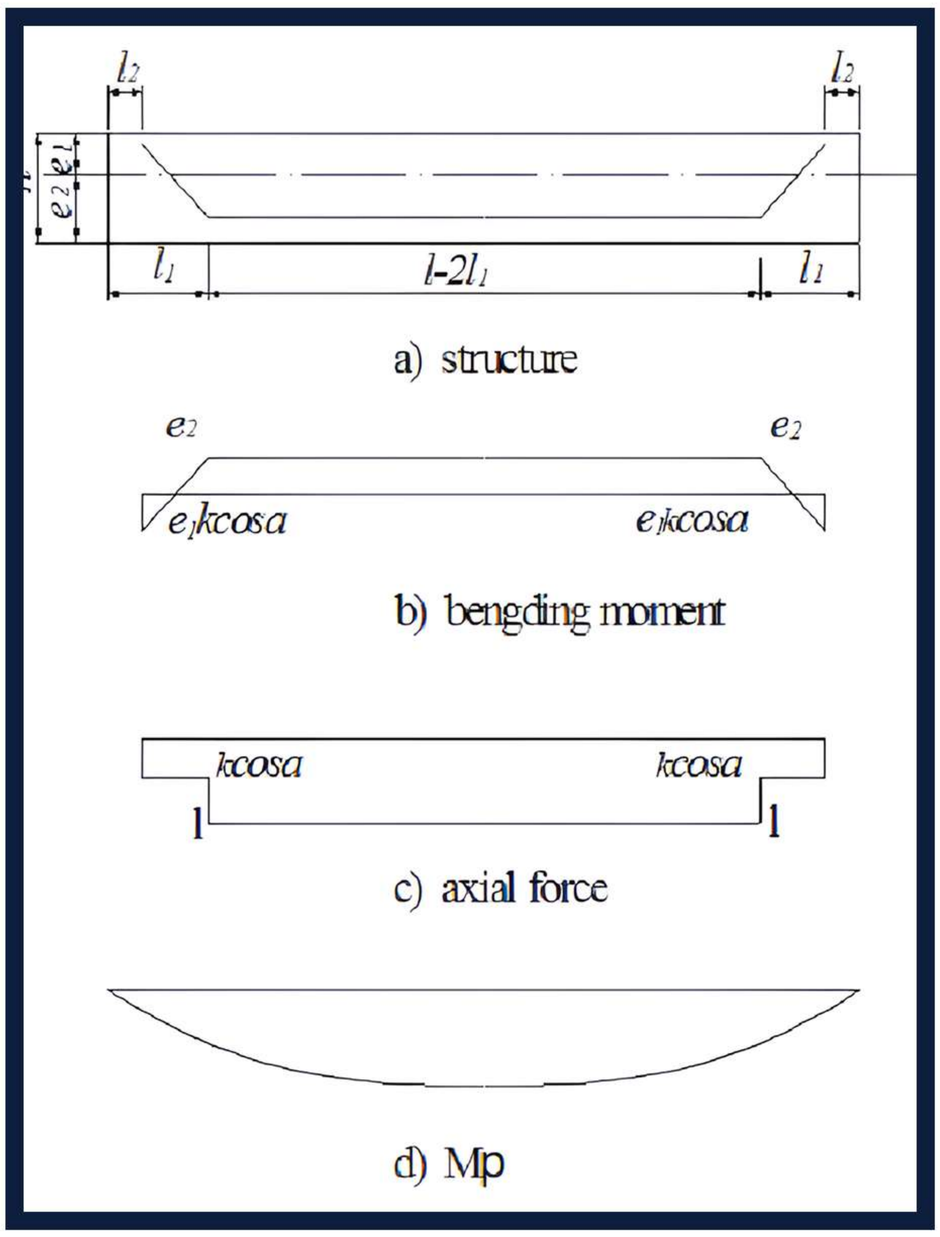

Externally prestressed bridge can not only limit and reduce the cracks and deformation of the structure, improve the rigidity and bearing capacity of structure, improve the stress state of structure, but also have less interference for bridge operation when it is operating and have the good economic efficiency.

Bearings & Expansion Systems

Bridges face movement from temperature and traffic. SSC's bearing and expansion systems absorb these forces, ensuring alignment, integrity, and smooth transitions.

Movement Compensation

Durability Under Stress

Maintenance-Free Operation

Post-Tensioning Technology

SSC's Dynamic Load Management System integrates precision-machined components and multi-layer elastomeric units that distribute stresses evenly across bridge spans. The design minimizes fatigue, vibration, and wear ensuring a stable, long-term load path.

Pot–PTFE Bearings

High-load rotational bearings with neoprene elastomer in a steel pot and PTFE surface ideal for bridges and heavy structures requiring simultaneous rotation and movement.

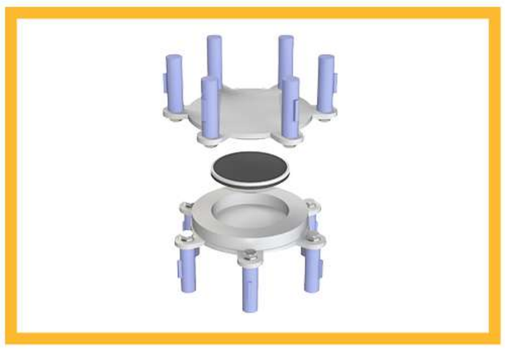

Fixed Type

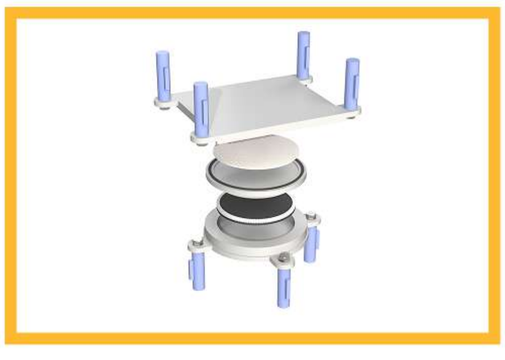

Free Sliding Type Duct

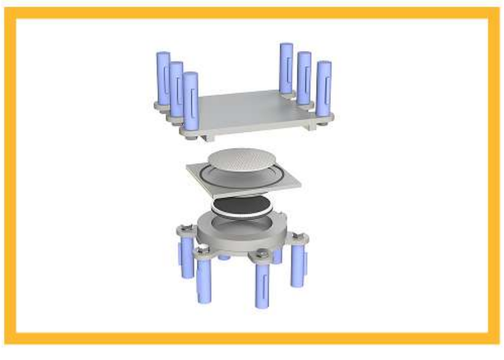

Guided Type

Stainless Steel Top Plate

Elastomeric Bearings

Resilient laminated bearings with steel shims and vulcanized rubber offer controlled flexibility and vertical load transfer ideal for bridges and structures with moderate movement.

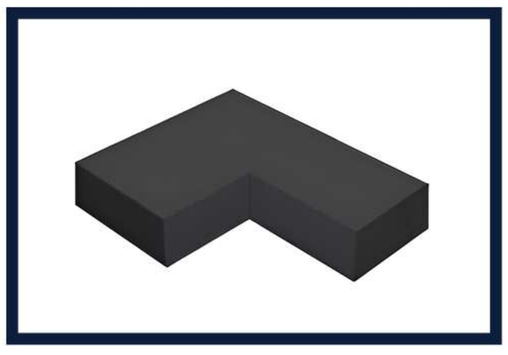

Plain Pad

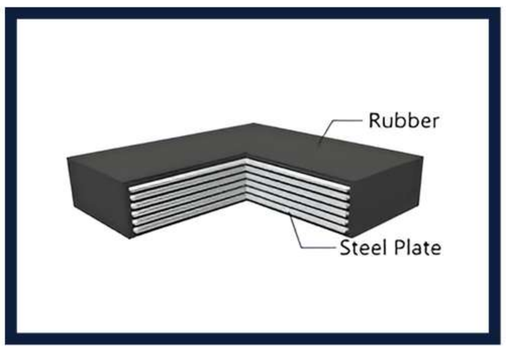

Laminated Type

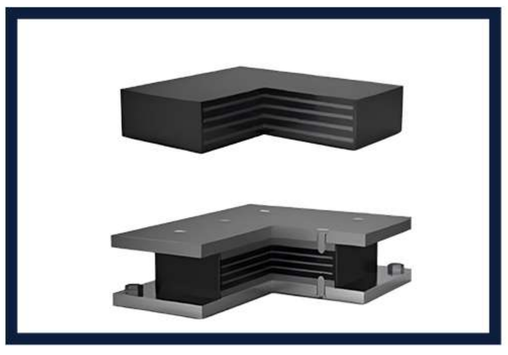

Reinforced / Non-reinforced

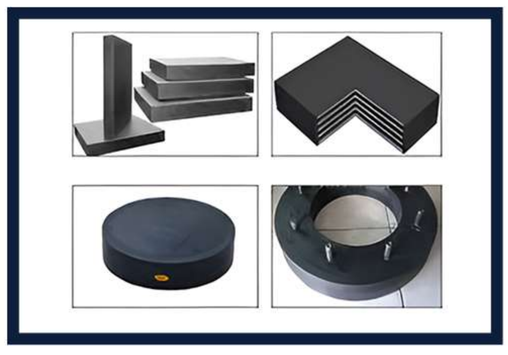

Custom Dimensions

Bridge Expansion Joints

Modular systems bridge deck gaps, accommodating movement and thermal expansion, with anti-skid surfaces and watertight seals.

Strip Seal Type

Finger Type

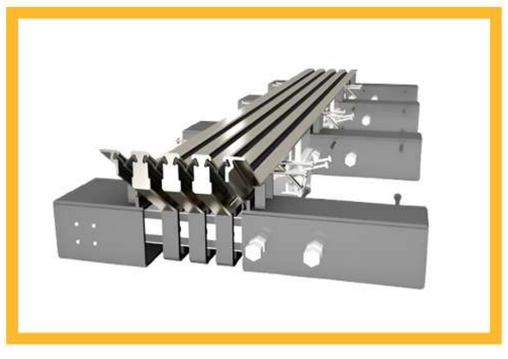

Modular Expansion Joint

Asphaltic Plug Type

Tensile Bearing test results:

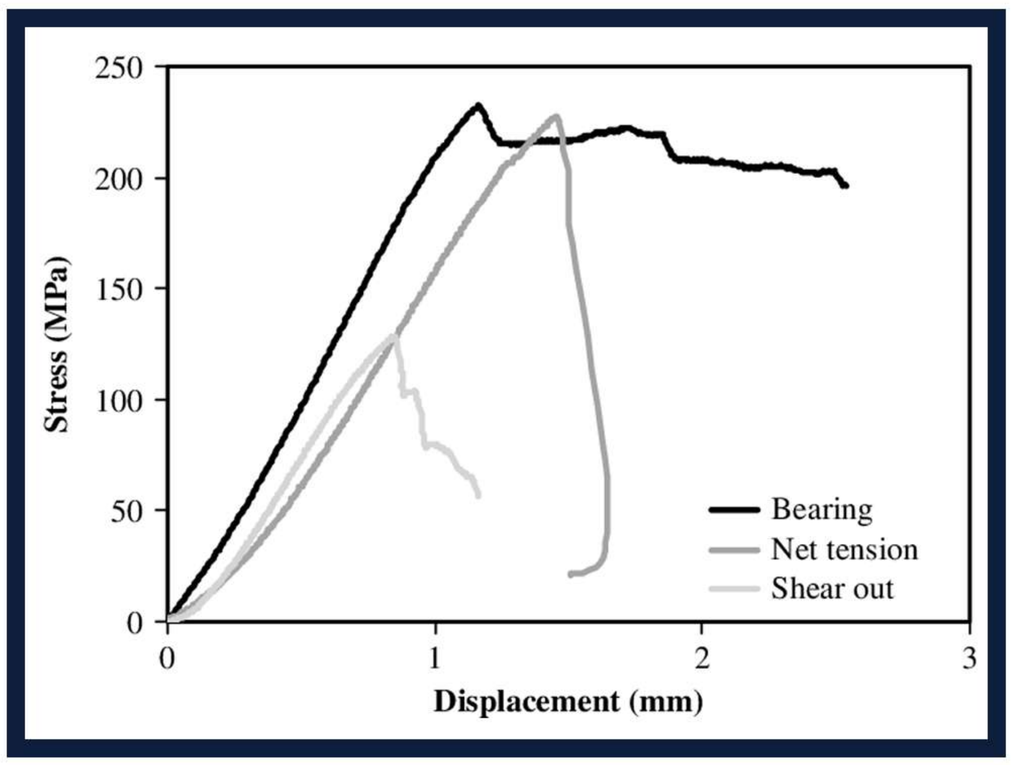

The aim of this research is to investigate the pin/hole contact stress of a composite laminate and failure modes when submitted to tensile bearing tests.

Steel Retainer Plates

Bearing Bolts & Sleeves

Elastomeric Bushes

Rubber End Caps

Guide Rails & Lock Plates

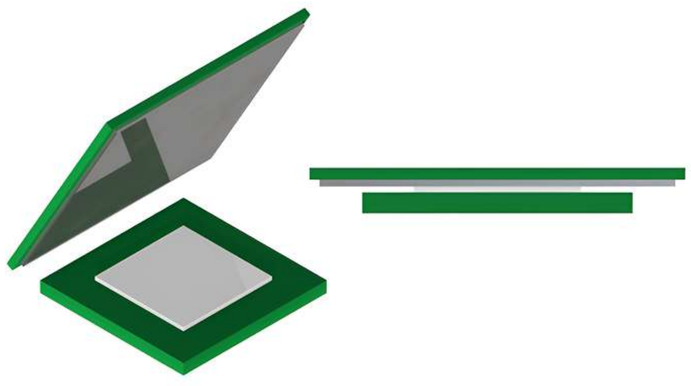

PTFE Sliding Plates

Drainage & Surface Components

Efficient water management ensures bridge longevity. SSC's drainage and surface systems enable smooth discharge and durable access, protecting decks, joints, and bearings from water damage.

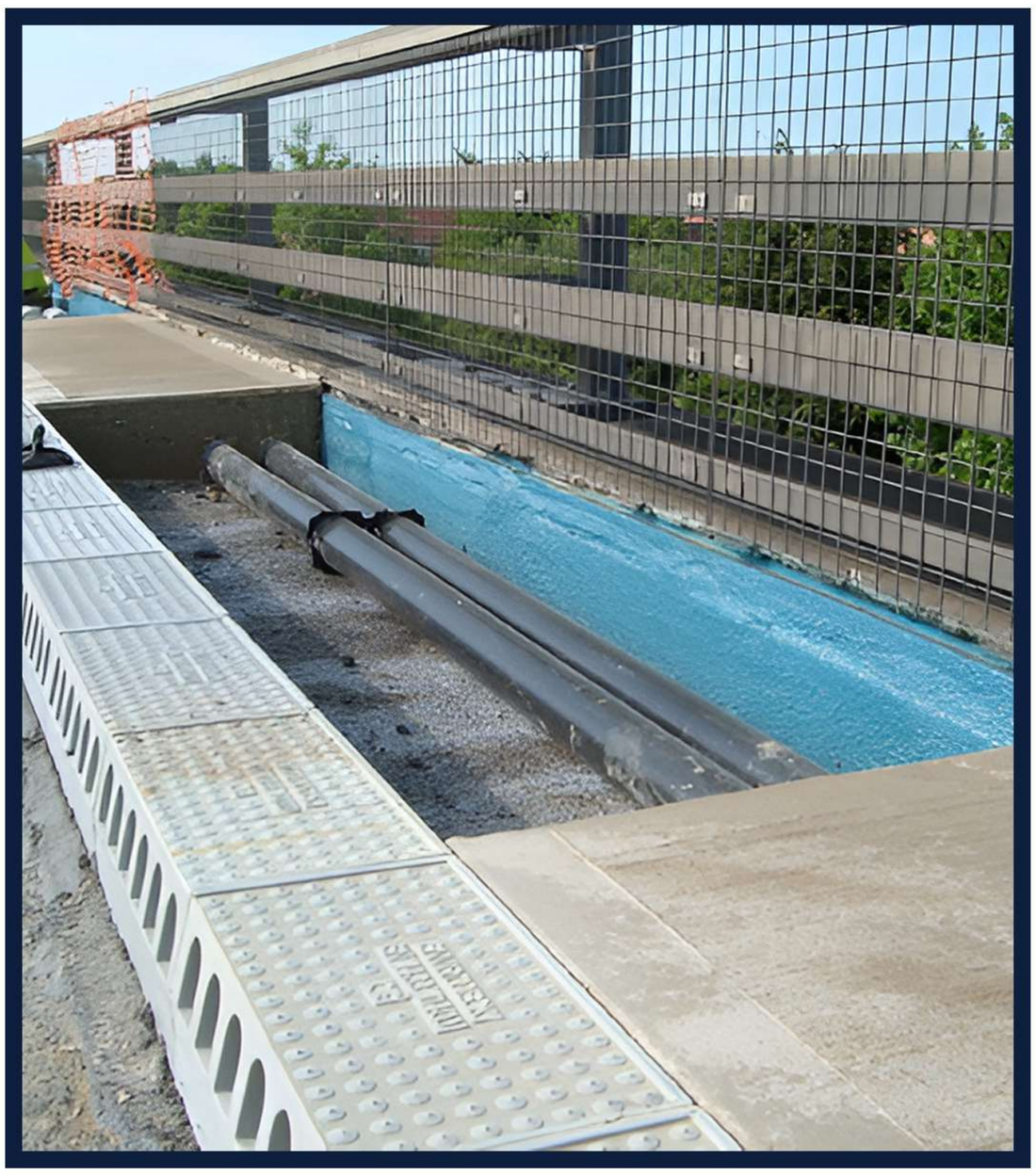

Optimized Flow Design

Corrosion Resistance

Ease of Maintenance

Surface Protection & Drainage Tech

SSC's Surface Protection Technology integrates precision-cast outlets, grating covers, and flow channels that guide surface runoff safely away from structural zones. Each unit undergoes galvanizing or coating treatment to ensure long-term resistance against water and debris accumulation.

Bridge Drainage Spouts

Engineered outlets collect and divert surface water from bridge decks. Made from corrosion-resistant steel or aluminium, they prevent stagnation and protect bearings & substructures.

Vertical Spout

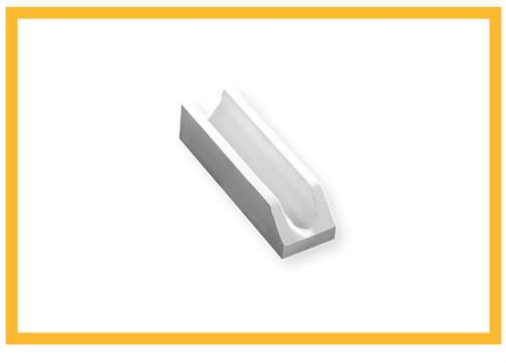

Horizontal Spout

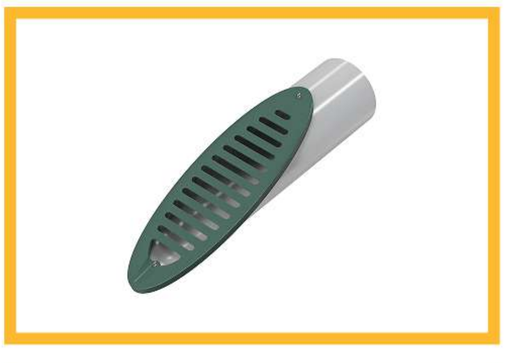

Angular Spout

Customized Dimensions

Deck Gratings & Covers

High-strength grated panels installed over drainage channels or inspection ducts. Slip-resistant and durable, these panels provide safe access while maintaining effective water flow.

Aluminium Grating

Stainless Steel Grating

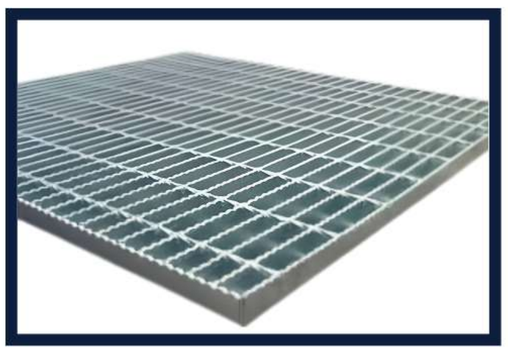

Galvanized Steel Cover

Serrated Type

Inspection Walkway Panels

Lightweight aluminium or galvanized platforms for bridge and pier maintenance combine strength, drainage, and corrosion resistance for all-weather access.

Modular Type

Hinged Access Covers

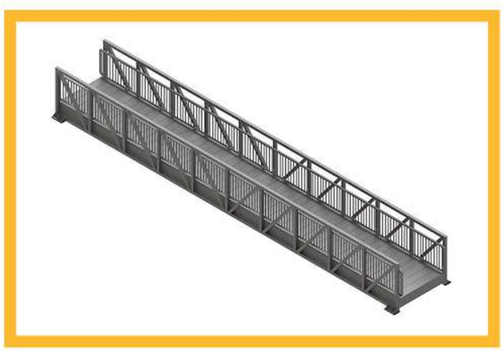

Maintenance Bridge Walkway

Edge Protection Panels

Aluminium Melt Quality Test

The density (or Density Index) is valuable, but requires the supplement of additional quantification from the number and size of bifilms, which are recommended as additional major quality indicators.

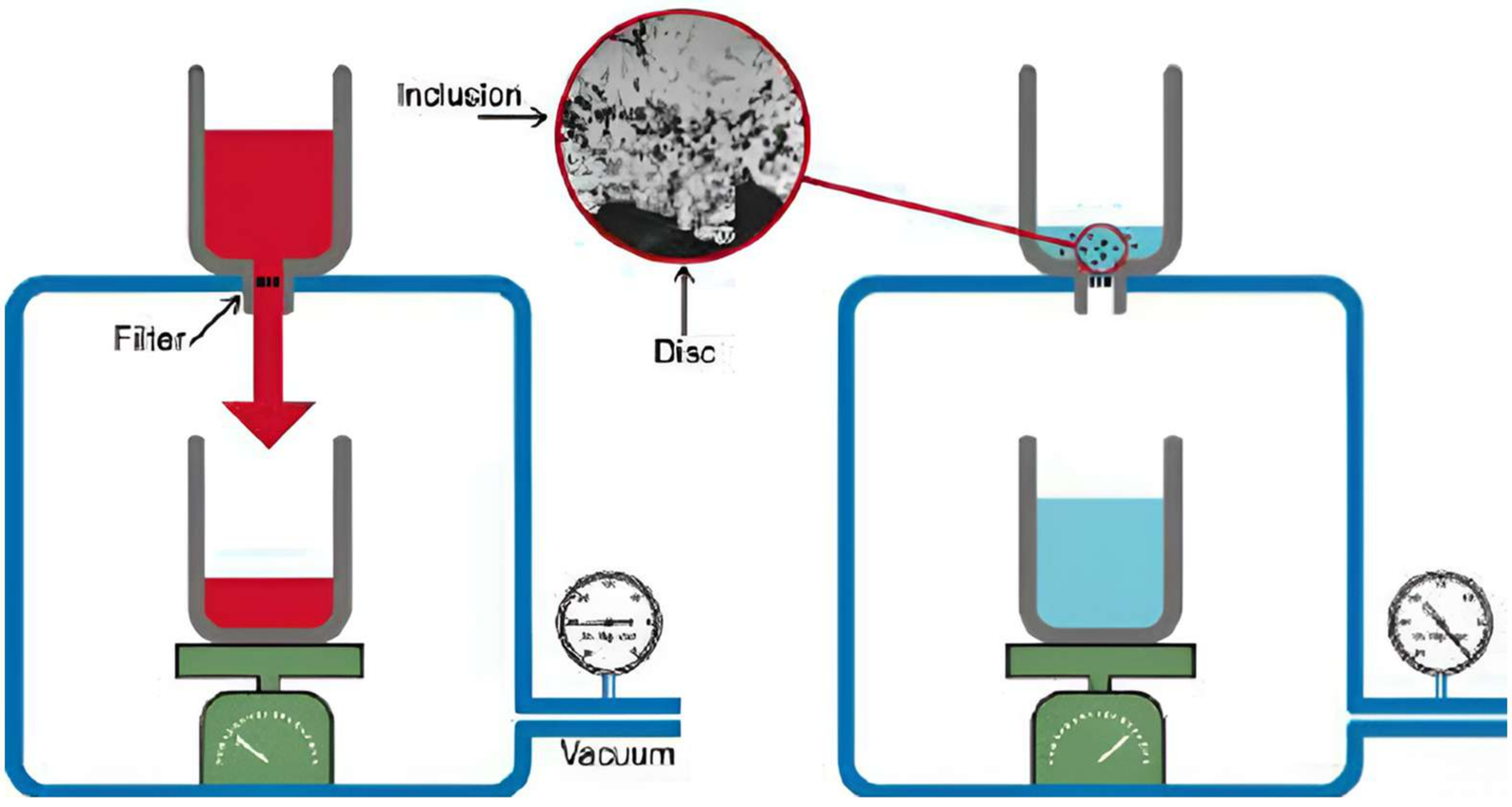

“ Good design is obvious.
Great design is transparent.

— Joe Sparano

Green Energy Systems

SSC is driving the shift toward sustainable infrastructure with advanced green-energy solutions. Our high-strength aluminium structures and solar mounting systems combine durability, efficiency, and precision to power a cleaner, long-lasting future.

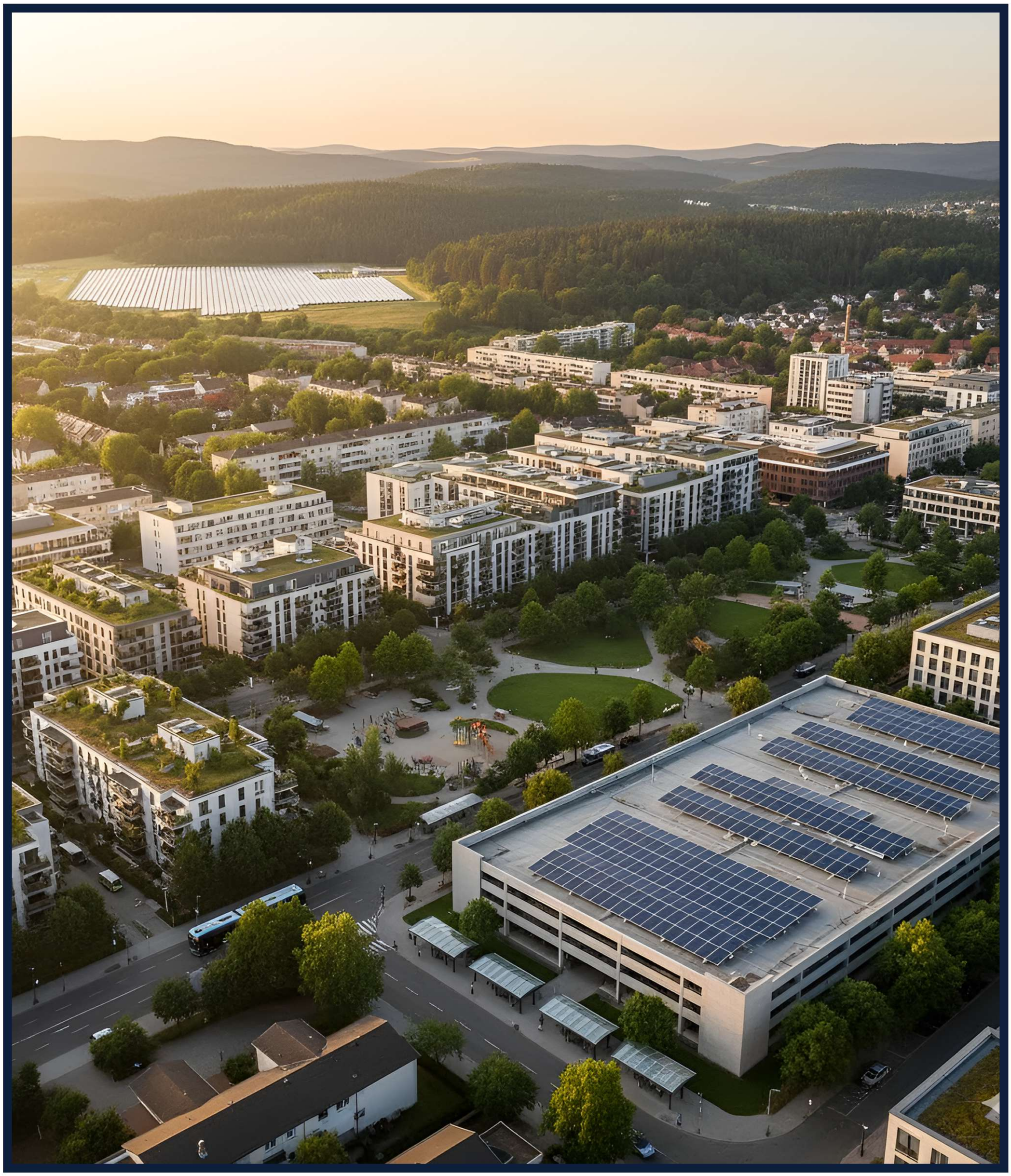

Solar Module Mounting Structures

Precision aluminium and steel frames ensure solar alignment and energy yield, built for quick installation and lasting durability.

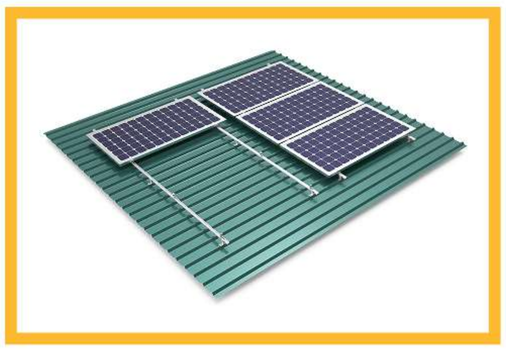

Roof Mounted

Ground-Mounted

Pole Mounted

Customized Tilt Frames

Aluminium Rooftop Clamps

Self-mounting clamp systems secure solar modules to metal roofs without puncturing, ensuring leak protection, vibration resistance, and lasting stability.

Mini Clamps

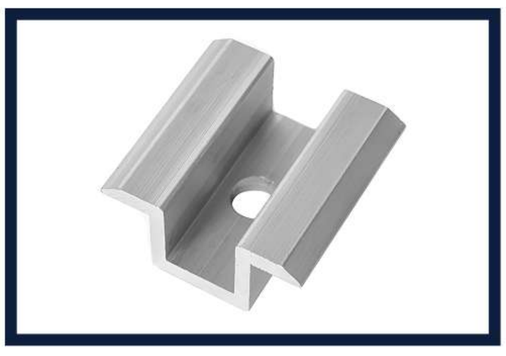

Middle Clamps

End Clamps

Adjustable Height Options

Step Walkways

FRP and stainless steel walkway systems providing safe maintenance access on inclined solar rooftops. Designed to distribute load evenly and prevent panel damage.

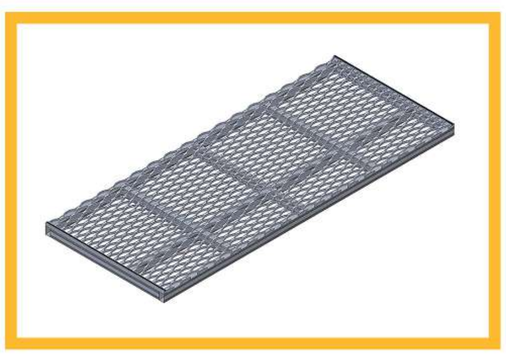

Flat Step Type

Inclined Type

Adjustable Angle Brackets

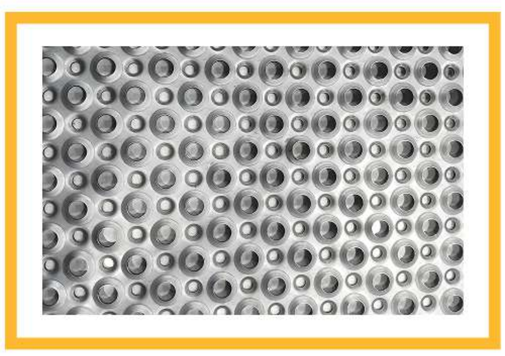

Non-slip Surface Finish

Skylight Protection Covers

Aluminium and FRP safety cages cover skylights to prevent falls, ensuring compliance, light transmission, and long-term protection.

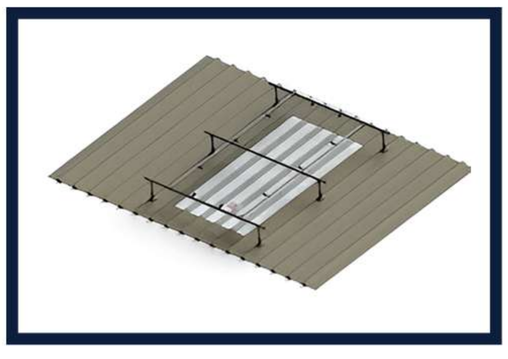

Fixed Grid Type

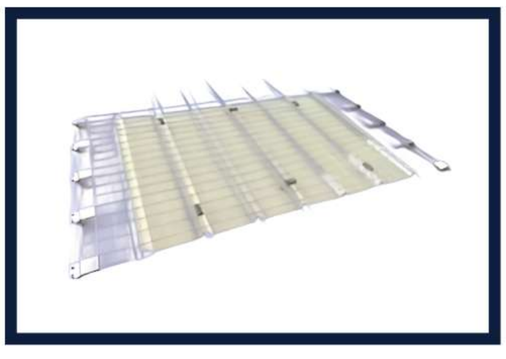

Hinged Cage Type

Solar Carports & Trees

Architectural solar systems merge design and energy generation, offering compact, high-output solutions for commercial and residential spaces.

James Solar Tree

James Carport

Dual-Post Carport

Cantilever Type

Aluminium Walkway

WC-GAL Walkways

Earthing Accessories

Foundation Fasteners

Safety Equipments

At SSC, safety is built into every layer. Our PPE and industrial safety systems protect workers across construction, tunnel, bridge, and energy projects combining comfort, reliability, and engineered assurance.

Safety Harness & Fall Arrest Systems

Full-body harnesses made from high-tensile polyester provide fall protection in elevated or confined spaces, ensuring safety, comfort, and durability.

Full Body Harness

Work Positioning Belt

Energy Absorber Lanyard

Anchorage Lifeline System

Industrial Helmets

Impact-resistant helmets made from high-density polyethylene ensure head protection from impact and electrical hazards, offering comfort and secure fit.

Ventilated Type

Non-Ventilated Type

Ratchet Suspension

Chin Strap

Safety Gloves

Protective gloves offering resistance against cuts, heat, and chemicals. Ideal for handling tools, machinery, and structural materials across construction environments.

Cut-Resistant Gloves

Heat-Resistant Gloves

Nitrile-Coated Gloves

Grip-Enhanced Gloves

Safety Shoes

Durable, anti-slip footwear with steel or composite toe caps and oil-resistant soles. Designed for comfort and stability across rugged industrial terrains.

Steel Toe

Composite Toe

Ankle Height Type

Anti-Static Sole

Respiratory Protection Systems

Advanced masks and filters ensure clean breathing in dusty or fume-prone areas with lasting comfort and high efficiency.

Half Mask

James Full-Face Mask

Filter Cartridge Type

Disposable Dust Mask

Ear Plugs

Safety Goggles

Face Shields

Reflective Jackets

PPE Kits

Dust Masks

Worksite Tool Belts

Knee Guards

CERTIFICATION

Certificate of Compliance

Application for
General Product Safety Directive (GPSD) 2001/95/EC.

Manufactured by

SWASTIK SALES CORPORATION
E.F 482/G, NEHRU GARDEN ROAD, ICICI ATM, KRISHAN NAGAR, JALANDHAR, PUNJAB - 144001, INDIA

has been assessed & found in accordance with the requirements of
General Product Safety Directive (GPSD) 2001/95/EC.
QCC is non-notified certification body, issue this 'compliance certificate' after audit of manufacturer product(s) & technical file(s).
This certificate applies to the tested sample only not for whole production.
It's manufacturer sole responsibility to meet all the necessary conformity assessment activities according to GPSD 2001/95/EC and related standards before placing them on the market & CE mark on the product(s).

Original Certificate Date : 09-July-2025
Issue Date : 09-July-2025
Expiry Date : 08-July-2028

To check this certificate status visit:
"http://uasl.uk.com/certifiedorganization"

Authorised Signature
For Quality Control Certification
UK Office: 82, Adley Street,
London - E5 0DZ, United Kingdom

Quality Control Certification accredited by UASL, UK
This certificate doesn't provide the certified organisation with immunity from its legal obligations.
This certificate remains the property of QC Certification to whom it must be returned on request.

Certificate

This is to Certify that
SWASTIK SALES CORPORATION
E.F 482/G, NEHRU GARDEN ROAD, ICICI ATM, KRISHAN NAGAR, JALANDHAR, PUNJAB – 144001, INDIA

has been found in Compliance with requirements of
Quality Management System
ISO 9001:2015

Issue Date : 09-July-2025
1st Surveillance Due : 08-June-2026
2nd Surveillance Due: 08-June-2027
Expiry Date : 08-July-2028

To check this certificate status visit:
"https://qccertification.com/Client.aspx"

Authorised Signature
Quality Control Certification
Website: https://qccertification.com

Certification Body QMS 0004
EAS is member of International Accreditation Forum (IAF)
This certificate remains the property of "QCC" to whom it must be returned on request.
Version : 1.2

CE Certified

Tailoring solutions to meet your unique business needs.

ISO

Tailoring solutions to meet your unique business needs.

MAKE IN INDIA

Made in India

Tailoring solutions to meet your unique business needs.

SWASTIK SALES CORPORATION

Engineering a World of Possibilities

Nehru Park Road, Jalandhar,
Punjab, India-144001

+91 708 781 5515
+91 869 971 3660

contact@sscglobal.in

Swastik Sales Corporation
sscglobal.in
sscglobal_in
sscglobal.in