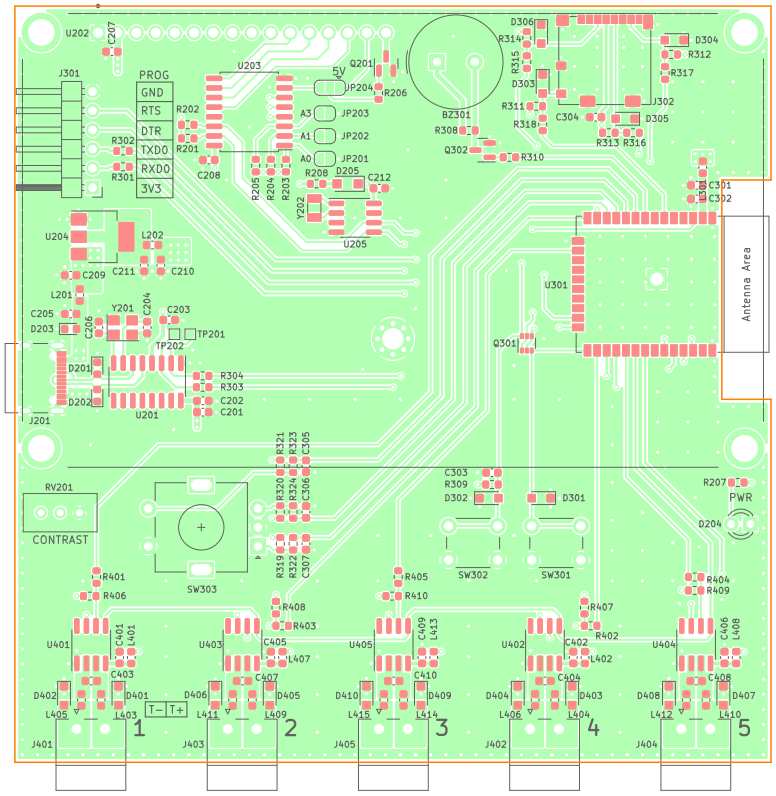

by: Hardik Rathod
https://github.com/hardikrathod4/Temperature-Data-Logger
OPENSOURCE (MIT License)

Sheet: Assembly
File: Temperature_Data_Logger_v3.kicad_pcb

Title: 5 Channel K Thermocouple Temperature Data Logger

Size: A4	Date: 2022-04-12	**Rev: 3.0**
KiCad E.D.A. kicad (6.0.8)		Id: 1/1