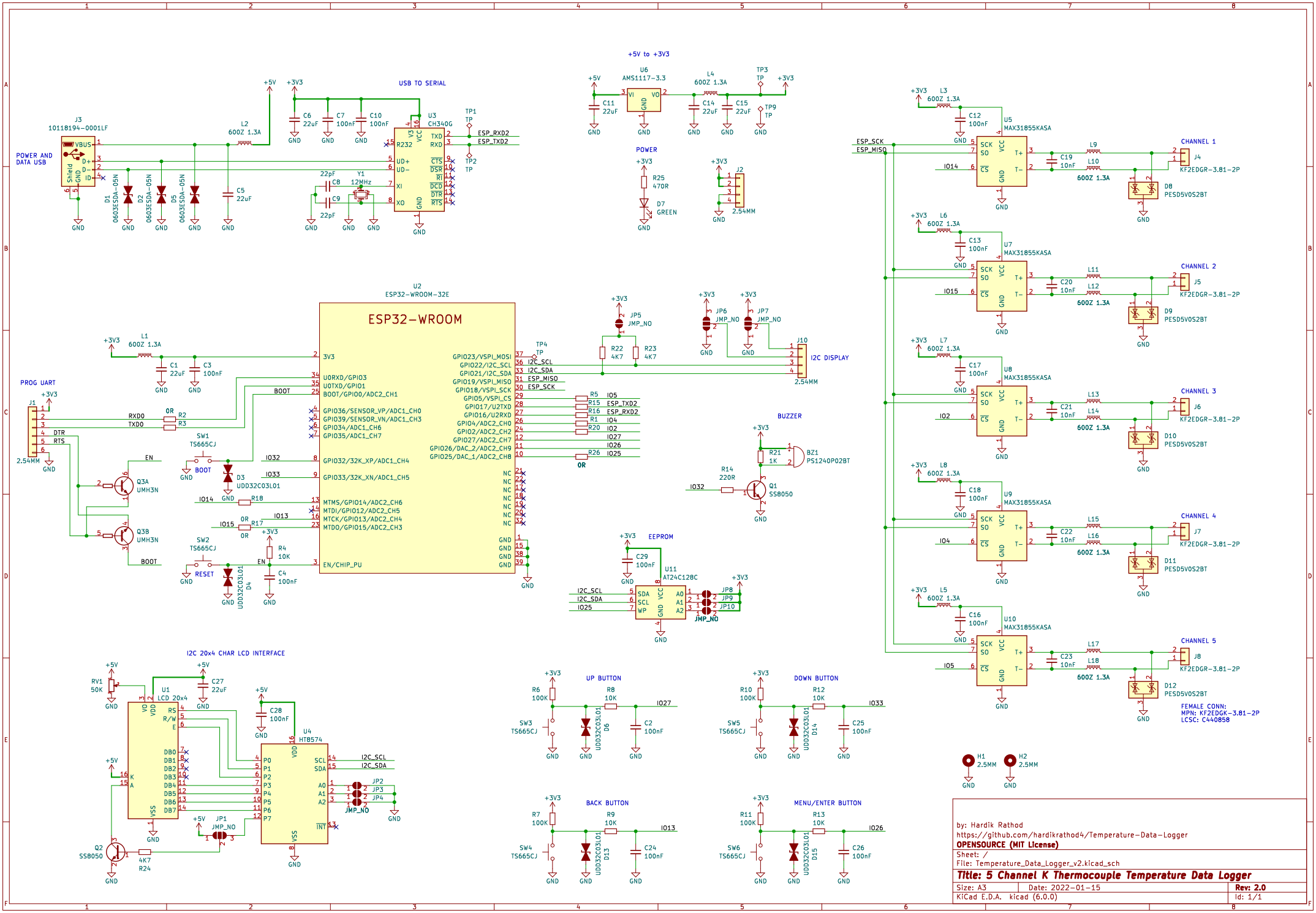
USB TO SERIAL
POWER AND DATA USB
J3
10118194-0001LF
L2
600Z 1.3A
C6 22uF
C7 100nF
C10 100nF
U3
CH340G
R232
TP1
TP
ESP_RXD2
ESP_TXD2
TP2
TP
C5 22uF
D1 0603ESDA-05N
D2 0603ESDA-05N
D5 0603ESDA-05N
C8 22pF
C9 22pF
Y1 12MHz
+5V to +3V3
U6
AMS1117-3.3
C11 22uF
L4
600Z 1.3A
C14 22uF
C15 22uF
TP3
TP
TP9
TP
POWER
R25 470R
D7 GREEN
J2
2.54MM
U2
ESP32-WROOM-32E
ESP32-WROOM
3V3
U0RXD/GPIO3
U0TXD/GPIO1
BOOT/GPIO0/ADC2_CH1
GPIO36/SENSOR_VP/ADC1_CH0
GPIO39/SENSOR_VN/ADC1_CH3
GPIO34/ADC1_CH6
GPIO35/ADC1_CH7
GPIO32/32K_XP/ADC1_CH4
GPIO33/32K_XN/ADC1_CH5
MTMS/GPIO14/ADC2_CH6
MTDI/GPIO12/ADC2_CH5
MTCK/GPIO13/ADC2_CH4
MTDO/GPIO15/ADC2_CH3
EN/CHIP_PU
GPIO23/VSPI_MOSI
GPIO22/I2C_SCL
GPIO21/I2C_SDA
GPIO19/VSPI_MISO
GPIO18/VSPI_SCK
GPIO5/VSPI_CS
GPIO17/U2TXD
GPIO16/U2RXD
GPIO4/ADC2_CH0
GPIO2/ADC2_CH2
GPIO27/ADC2_CH7
GPIO26/DAC_2/ADC2_CH9
GPIO25/DAC_1/ADC2_CH8
L1
600Z 1.3A
C1 22uF
C3 100nF
PROG UART
J1
2.54MM
RXD0
TXD0
DTR
RTS
R2 0R
R3 0R
SW1
TS665CJ
BOOT
D3 UDD32C03L01
R18 IO14
R17 0R IO15
IO13
IO32
IO33
SW2
TS665CJ
RESET
D4 UDD32C03L01
R4 10K
C4 100nF
EN
Q3A UMH3N
Q3B UMH3N
TP4
TP
I2C_SCL
I2C_SDA
ESP_MISO
ESP_SCK
R5 IO5
R15 ESP_TXD2
R16 ESP_RXD2
R1 IO4
R20 IO2
IO27
IO26
R26 IO25
0R
JP5 JMP_NO
R22 4K7
R23 4K7
JP6 JMP_NO
JP7 JMP_NO
J10
I2C DISPLAY
2.54MM
BUZZER
R21 1K
BZ1 PS1240P02BT
R14 220R
Q1 SS8050
EEPROM
C29 100nF
U11
AT24C128C
JP8
JP9
JP10
JMP_NO
I2C 20x4 CHAR LCD INTERFACE
RV1 50K
U1
LCD 20x4
C27 22uF
C28 100nF
U4
HT8574
JP2
JP3
JP4
JMP_NO
JP1
JMP_NO
Q2 SS8050
R24 4K7
UP BUTTON
R6 100K
R8 10K
SW3 TS665CJ
D6 UDD32C03L01
C2 100nF
DOWN BUTTON
R10 100K
R12 10K
SW5 TS665CJ
D14 UDD32C03L01
C25 100nF
BACK BUTTON
R7 100K
R9 10K
SW4 TS665CJ
D13 UDD32C03L01
C24 100nF
MENU/ENTER BUTTON
R11 100K
R13 10K
SW6 TS665CJ
D15 UDD32C03L01
C26 100nF
U5
MAX31855KASA
U7
MAX31855KASA
U8
MAX31855KASA
U9
MAX31855KASA
U10
MAX31855KASA
CHANNEL 1
J4
KF2EDGR-3.81-2P
D8 PESD5V0S2BT
CHANNEL 2
J5
KF2EDGR-3.81-2P
D9 PESD5V0S2BT
CHANNEL 3
J6
KF2EDGR-3.81-2P
D10 PESD5V0S2BT
CHANNEL 4
J7
KF2EDGR-3.81-2P
D11 PESD5V0S2BT
CHANNEL 5
J8
KF2EDGR-3.81-2P
D12 PESD5V0S2BT
600Z 1.3A
FEMALE CONN:
MPN: KF2EDGK-3.81-2P
LCSC: C440858
H1 2.5MM
H2 2.5MM
by: Hardik Rathod
https://github.com/hardikrathod4/Temperature-Data-Logger
OPENSOURCE (MIT License)
Sheet: /
File: Temperature_Data_Logger_v2.kicad_sch
Title: 5 Channel K Thermocouple Temperature Data Logger
Size: A3
Date: 2022-01-15
Rev: 2.0
KiCad E.D.A. kicad (6.0.0)
Id: 1/1