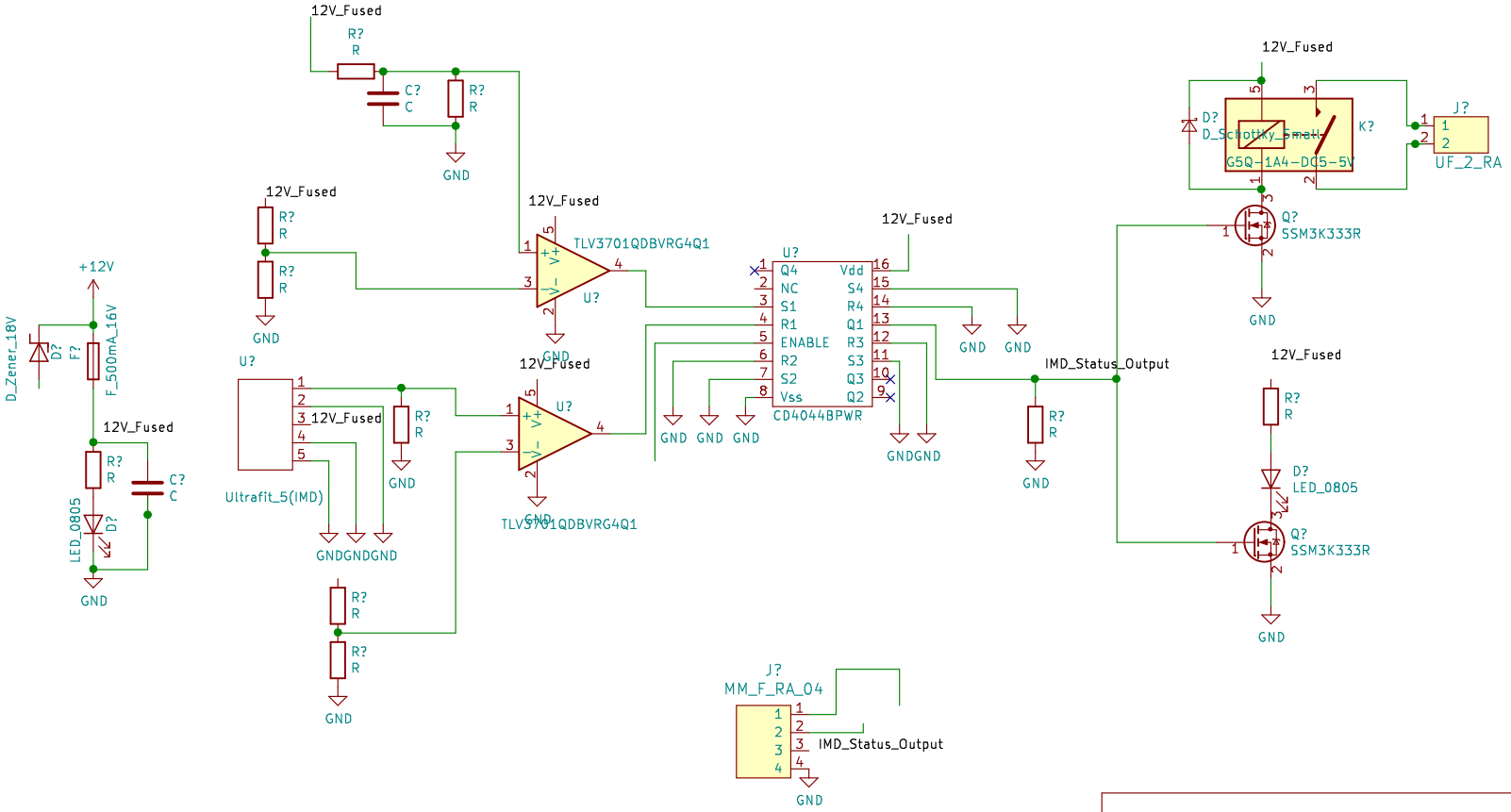

Sheet: /
File: IMD_v1.sch

Title:

Size: A4	Date:	Rev:
KiCad E.D.A. eeschema 5.0.0-fee4fd166ubuntu18.04.1		Id: 1/1