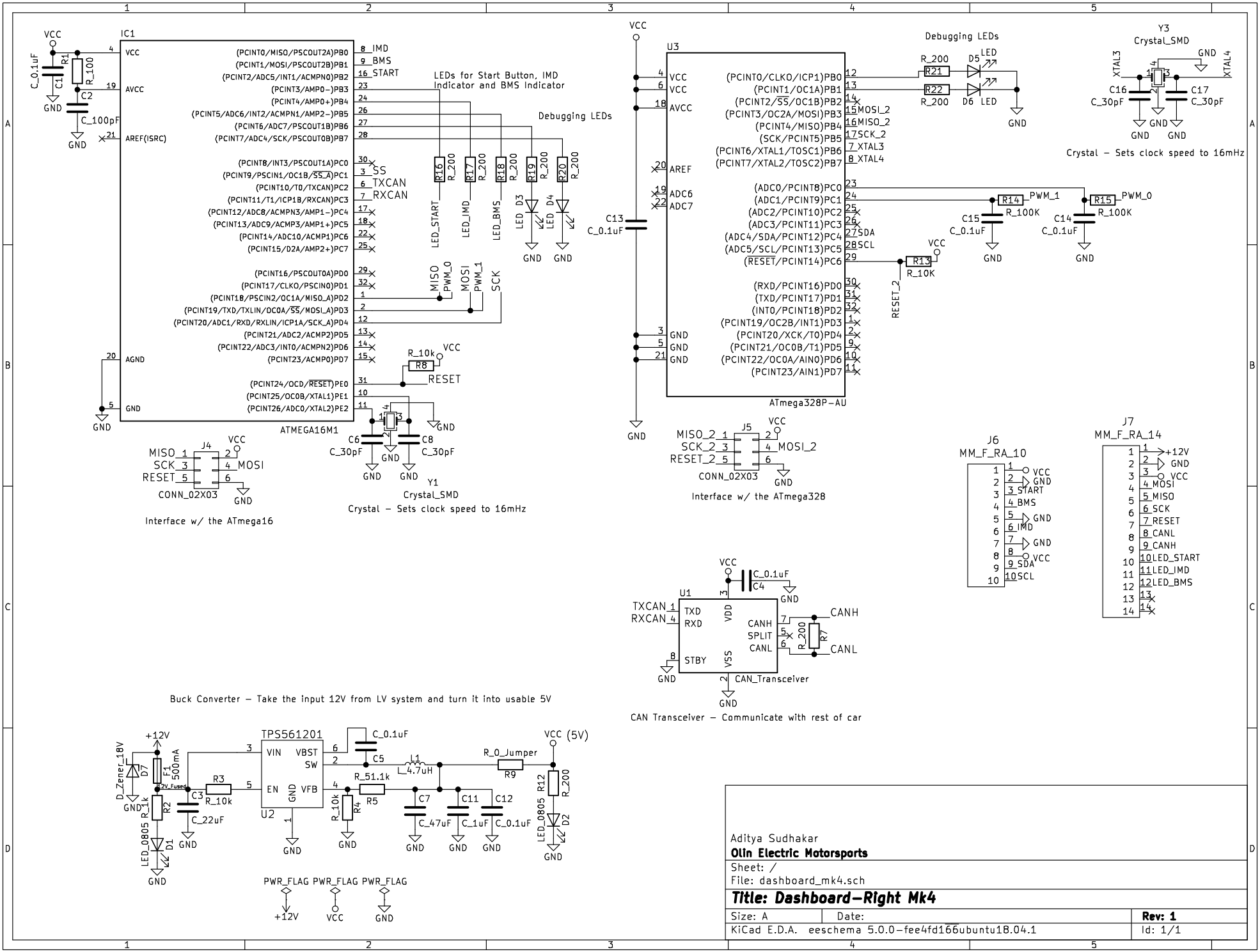
IC1
ATMEGA16M1
LEDs for Start Button, IMD Indicator and BMS Indicator
Debugging LEDs
Interface w/ the ATmega16
Crystal – Sets clock speed to 16mHz
U3
ATmega328P-AU
Debugging LEDs
Crystal – Sets clock speed to 16mHz
Interface w/ the ATmega328
J6
MM_F_RA_10
J7
MM_F_RA_14
U1
CAN_Transceiver
CAN Transceiver – Communicate with rest of car
Buck Converter – Take the input 12V from LV system and turn it into usable 5V
TPS561201
U2
Aditya Sudhakar
Olin Electric Motorsports
Sheet: /
File: dashboard_mk4.sch
Title: Dashboard–Right Mk4
Size: A
Date:
Rev: 1
KiCad E.D.A. eeschema 5.0.0-fee4fd166ubuntu18.04.1
Id: 1/1