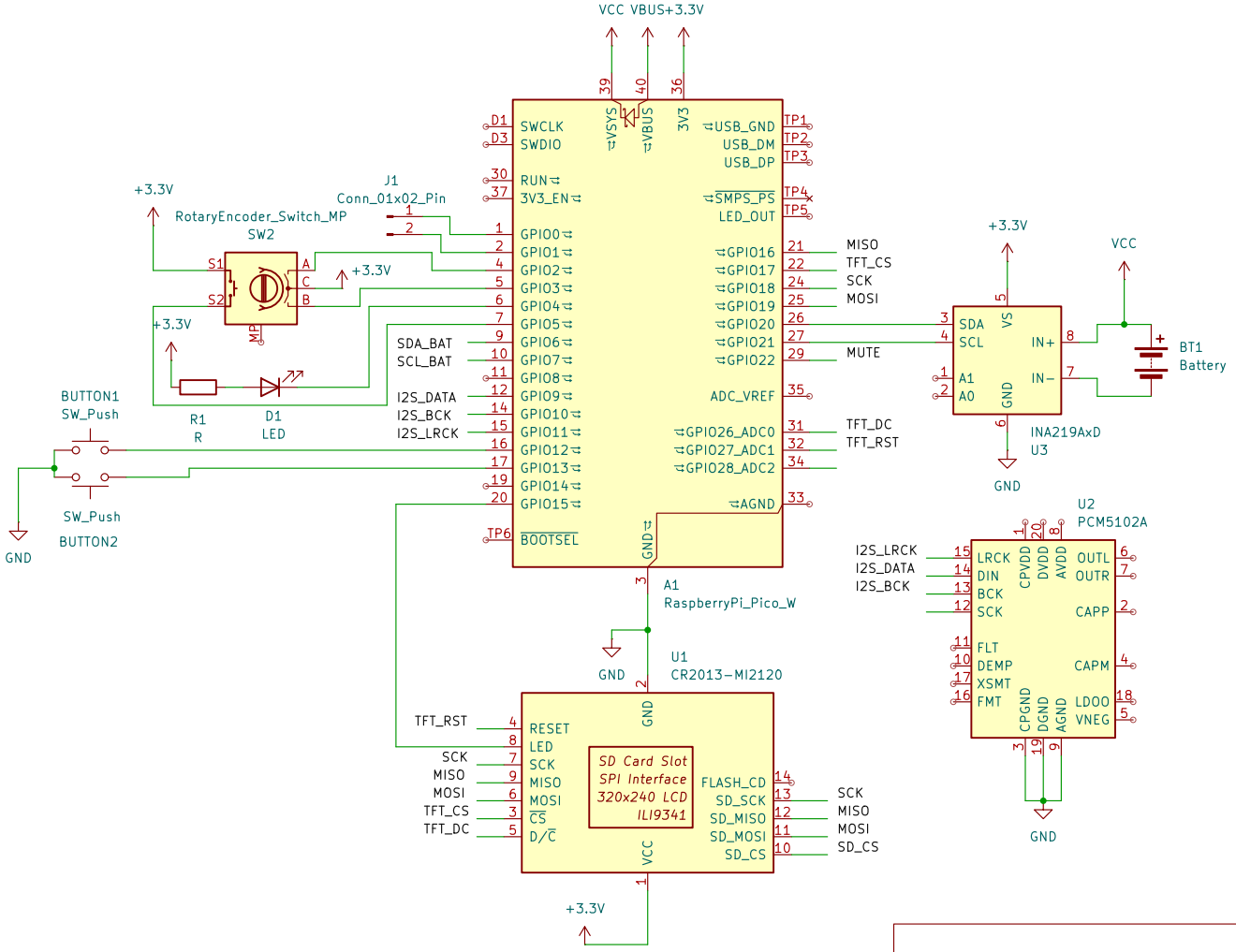

This is a pin-mapping documentation, not a real, working, schematic
Main parts have been added to the schematics instead.
Some cape/shield are not available as components.

Sheet: /
File: board.kicad_sch

Title: Music Player Proof of Concept

Size: A4	Date: 2025-07-31	**Rev: 0.0.1**
KiCad E.D.A. 9.0.3		Id: 1/1