LAU
الجامعة اللبنانية الأميركية
Lebanese American University

CSC 447: Parallel Programming for Multi-Core and Cluster Systems

Shared Parallel Programming Using OpenMP

Instructor: Haidar M. Harmanani

Spring 2020

OpenMP
Enabling HPC since 1997

Recap

OpenMP: Recap

- OpenMP is a parallel programming model for Shared-Memory machines
  - All threads have access to a shared main memory
  - Each thread may have private data.
- Parallelism has to be expressed explicitly by the programmer.
  - Base construct is a Parallel Region which is a team of threads that is provided by the runtime system.
- Using the Worksharing constructs, the work can be distributed among the threads of a team.
  - The Task construct defines an explicit task along with it's data environment. Execution may be deferred.
- To control the parallelization, mutual exclusion as well as thread and task synchronization constructs are available.

Simple Example 1

Write a program that prints either "A race car" or "A car race" and maximize the parallelism

Simple Example 1

```
#include <stdlib.h>
#include <stdio.h>

int main(int argc, char *argv[]) {

          printf("A ");
          printf("race ");
          printf("car ");

   printf("\n");
   return(0);
}
```

Output?

Parallel Simple Example 1

```
#include <stdlib.h>
#include <stdio.h>
#include “omp.h”

int main(int argc, char *argv[]) {
#pragma omp parallel
{
      printf("A ");
      printf("race ");
      printf("car ");
}
     printf("\n");  return(0);
}
```

```
A A A A A A A A A race A A A A A A A race race
race race race race race race car race race race
race race race race car car car car car car car
car car car car car car car car
```

Parallel Simple Example 1 Using `Single`

```
#include <stdlib.h>
#include <stdio.h>
#include “omp.h”

int main(int argc, char *argv[]) {
#pragma omp parallel
{
    #pragma omp single
    {
       printf("A ");
       printf("race ");
       printf("car ");
     }
    }
    printf("\n");  return(0);
}
```

Output?

Parallel Simple Example 1 Using Tasks

```
#include <stdlib.h>
#include <stdio.h>
#include “omp.h”

int main(int argc, char *argv[]) {
#pragma omp parallel
{
    #pragma omp single
    {
        printf("A ");
        #pragma omp task
        printf("race ");
        #pragma omp task
        printf("car ");
     }
    }
    printf("\n");  return(0);
}
```

Output?

A car race

A race car

Parallel Simple Example 1 Using Tasks

```
#include <stdlib.h>

#include <stdio.h>

#include “omp.h”

int main(int argc, char *argv[]) {
#pragma omp parallel
{
     #pragma omp single
     {
         printf("A ");
         #pragma omp task
         {
         printf("race "); printf("race ");
         printf("race "); printf("race ");
         }
         #pragma omp task
         printf("car ");
      }
     }
     printf("\n");  return(0);
}
```

And Now?

A car race race race race

A race car race race race

Task Construct: Linked List Revisited

- A team of threads is created at the omp parallel construct
- A single thread is chosen to execute the while loop
  - Lets call this thread "L"
- Thread L operates the while loop, creates tasks, and fetches next pointers
- Each time L crosses the omp task, construct it generates a new task and has a thread assigned to it
- Each task runs in its own thread
- All tasks complete at the barrier at the end of the parallel region's single construct

```
#pragma omp parallel
{
  #pragma omp single
  { // block 1
    node * p = head;
    while (p) {
    //block 2
    #pragma omp task private(p)
      process(p);
    p = p->next;  //block 3
    }
  }
}
```

Examples

Back to the PI Problem …

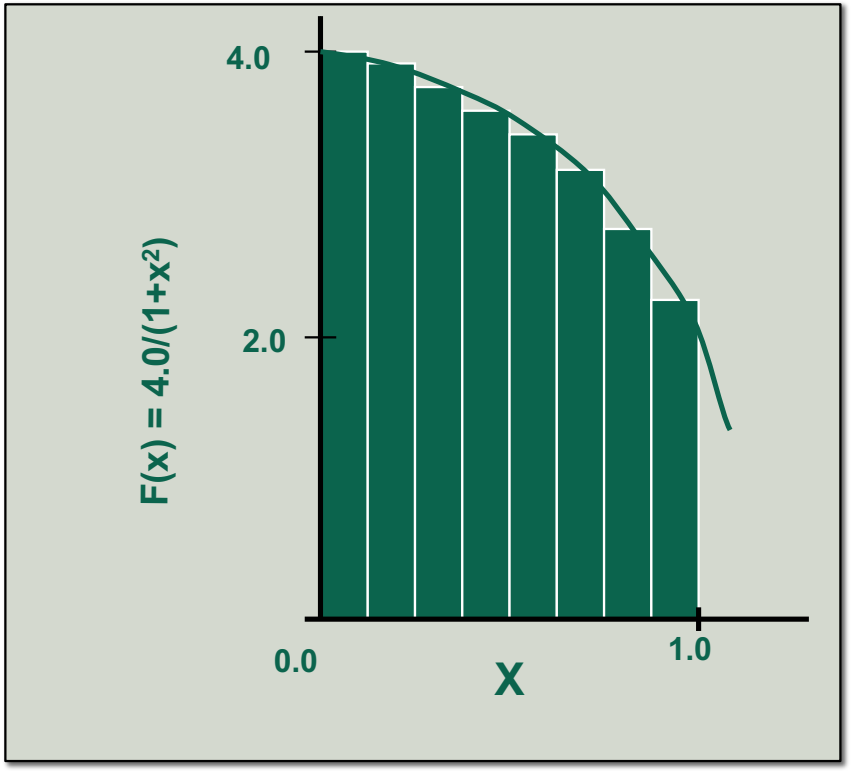

Mathematically, we know that:

$$\int_0^1 \frac{4.0}{(1+x^2)}\, dx = \pi$$

We can approximate the integral as a sum of rectangles:

$$\sum_{i=0}^{N} F(x_i)\Delta x \approx \pi$$

Where each rectangle has width Δx and height $F(x_i)$ at the middle of interval i.

Back to the PI Problem: Serial Code

```
static long num_steps = 100000;
double step;
void main ()
{
   int i;
   double x, pi, sum = 0.0;

   step = 1.0/(double) num_steps;

   for (i=0;i< num_steps; i++){
        x = (i+0.5)*step;
        sum = sum + 4.0/(1.0+x*x);
    }
    pi = step * sum;
}
```

Calculate Pi by integration

$$\Pi = \int_0^1 \frac{4}{(1+x^2)} dx$$

```
double f(double x) {
return (double)4.0 / ((double)1.0 + (x*x));
}
void computePi() {
double h = (double)1.0 / (double)iNumIntervals;
double sum = 0, x;

...

for (int i = 1; i <= iNumIntervals; i++) {
    x = h * ((double)i - (double)0.5);
    sum += f(x);
}

myPi = h * sum;
}
```

Calculate Pi by integration

$$\Pi = \int_0^1 \frac{4}{(1+x^2)} dx$$

```
double f(double x) {
return (double)4.0 / ((double)1.0 + (x*x));
}
void computePi() {
double h = (double)1.0 / (double)iNumIntervals;
double sum = 0, x;

#pragma omp parallel for private(x) reduction(+:sum)

for (int i = 1; i <= iNumIntervals; i++) {
    x = h * ((double)i - (double)0.5);
    sum += f(x);
}

myPi = h * sum;
}
```

Reduction Example: Computing Pi

```
long num_steps=100000; double step;

void main()
{  int i;
   double x, sum = 0.0, pi;

    step = 1./(double)num_steps;
    start = clock();
    #pragma omp parallel for private(x) reduction (+:sum)
    for (i=0; i<num_steps; i++)
    {
      x = (i + .5)*step;
      sum = sum + 4.0/(1.+ x*x);
    }

    pi = sum*step;
    stop = clock();

    printf("The value of PI is %15.12f\n",pi);
    printf("Time to calculate PI was %f seconds\n",((double)(stop - start)/1000.0));
    return 0;
}
```

Calculate Pi by integration

$$\Pi = \int_0^1 \frac{4}{(1+x^2)} dx$$

# Threads	Runtime [sec.]	Speedup
1	0.002877	1.00
2	0.001777	1.62
4	0.002988	0.96
8	0.002050	1.40
16	0.105787	1.26

Number of Iterations: 1000,000
PI value: 3.141593

Architecture: Intel i7, 3 GHz, running Mac OS 10.11.3 with 16GB RAM

Useful MacOS/Linux Commands

```
To compile
    gcc –Wall –fopenmp –o pi pi.c

To set the number of threads to 4 using OMP_NUM_THREADS:
    In the bash shell, type: export OMP_NUM_THREADS=4
    in the c shell, type: setenv OMP_NUM_THREADS 4

You can set the number of threads to different values (2, 8, etc) using the same command
To run the OpenMP example code, simply type ./pi
You can use the time command to evaluate the program's runtime:
    Not very accurate but will do!
        voyager-2:~ haidar$ export OMP_NUM_THREADS=4
        voyager-2:~ haidar$ /usr/bin/time -p ./pi
         The value of PI is  3.141592653590
         The time to calculate PI was 18037.175000 seconds
         real 6.52
         user 17.97
         sys 0.06
You can compare the running time of the OpenMP version with the serial version by compiling
the serial version and repeating the above analysis
```

Parallel Tree Traversal

```
void traverse (Tree *tree)
{
   #pragma omp task
   if(tree->left)
     traverse(tree->left);

   #pragma omp task
   if(tree->right)
      traverse(tree->right);
   process(tree);
}
```

Useful MacOS/Linux Commands

- From within a shell, global adjustment of the number of threads:
  - export OMP_NUM_THREADS=4
  - ./pi
- From within a shell, one-time adjustment of the number of threads:
  - OMP_NUM_THREADS=4 ./pi
- Intel Compiler on Linux: asking for more information:
  - export KMP_AFFINITY=verbose
  - export OMP_NUM_THREADS=4
  - ./pi

Recursive Fibonacci

```
int main(int argc, char* argv[])

{
   [...]
   fib(input);
   [...]
```

```
int fib(int n)   {
   if (n < 2) return n;
   int x = fib(n - 1);
   int y = fib(n - 2);
   return
}  x+y;
```

Recursive Fibonacci: Discussion

```
int main(int argc, char* argv[])

{
   [...]
   fib(input);
   [...]
```

```
int fib(int n)   {
   if (n < 2) return n;
   int x = fib(n - 1);
   int y = fib(n - 2);
   return
}  x+y;
```

- Only one Task / Thread should enter `fib()` from `main()`, it is responsible for creating the two initial work tasks
- `taskwait` is required, as otherwise `x` and `y` would be lost

Recursive Fibonacci: Attempt 0

```
int main(int argc, char* argv[])

{
    [...]
#pragma omp parallel
{
#pragma omp single
{
    fib(input);
}
}
    [...]
}
```

```
int fib(int n) {
  if (n < 2) return n;
  int x, y;
  #pragma omp task
  {
     x = fib(n - 1);
  }
  #pragma omp task
  {
     y = fib(n - 2);
  }
  #pragma omp taskwait
     return x+y;
  }
```

What's wrong here?

x and y are private. Can't use values of private variables outside of tasks

Recursive Fibonacci: Attempt 1

```
int main(int argc, char* argv[])

{
    [...]
#pragma omp parallel
{
#pragma omp single
{
    fib(input);
}
}
    [...]
}
```

```
int fib(int n) {
  if (n < 2) return n;
  int x, y;
  #pragma omp task shared(x)
  {
     x = fib(n - 1);
  }
  #pragma omp task shared(y)
  {
     y = fib(n - 2);
  }
  #pragma omp taskwait
     return x+y;
  }
```

Recursive Fibonacci: Attempt 1

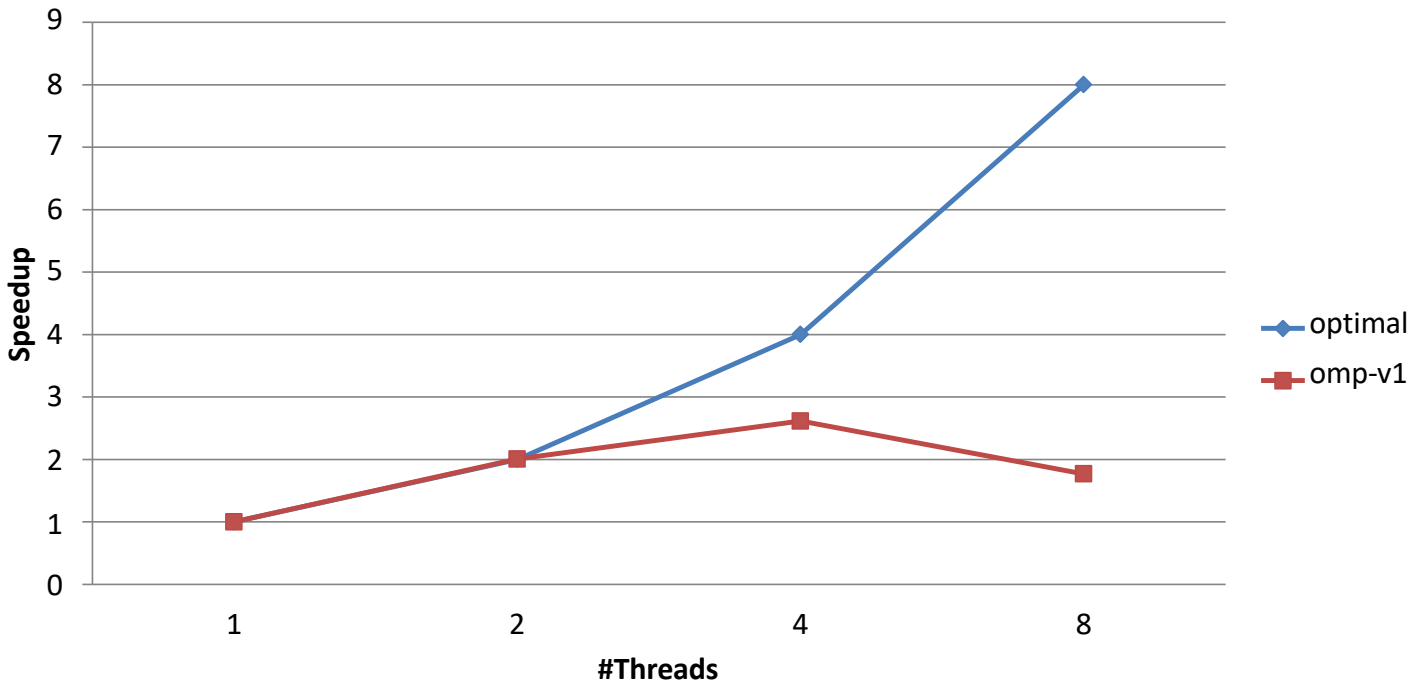

Task creation overhead prevents better scalability

Recursive Fibonacci: Attempt 2

```
int main(int argc, char* argv[])

{
   [...]
#pragma omp parallel
{
#pragma omp single
{
   fib(input);
}
}
   [...]
}
```

```
int fib(int n)   {
 if (n < 2) return n;
 int x, y;
 #pragma omp task shared(x) if(n > 30)
 {
    x = fib(n - 1);
 }
 #pragma omp task shared(y) if(n > 30)
 {
    y = fib(n - 2);
 }
 #pragma omp taskwait
    return x+y;
}
```

Don't create yet another task once a certain (small enough) n is reached

Recursive Fibonacci: Attempt 2

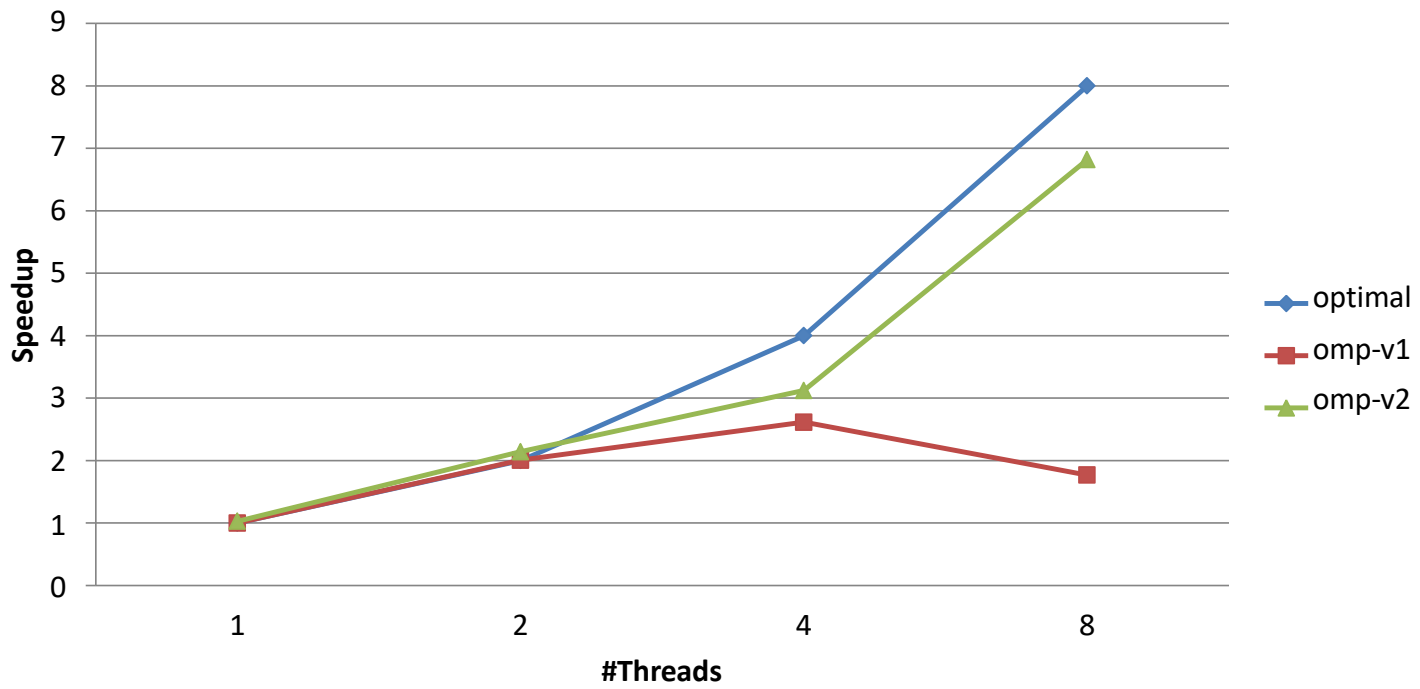

Overhead persists when running with 4 or 8 threads

Recursive Fibonacci: Attempt 3

```
int main(int argc,  char* argv[])
{
   [...]
#pragma  omp parallel
{
#pragma  omp single
{
   fib(input);
}
}
   [...]
}
```

Skip the OpenMP overhead once a certain n is reached (no issue w/ production compilers)

```
int fib(int n)  {
   if (n < 2) return n;
   if (n <= 30)
      return serfib(n);
   int x, y;
   #pragma omp task shared(x)
   {
      x = fib(n - 1);
   }
   #pragma omp task shared(y)
   {
      y = fib(n - 2);
   }
   #pragma omp taskwait
      return x+y;
```

Recursive Fibonacci: Attempt 3

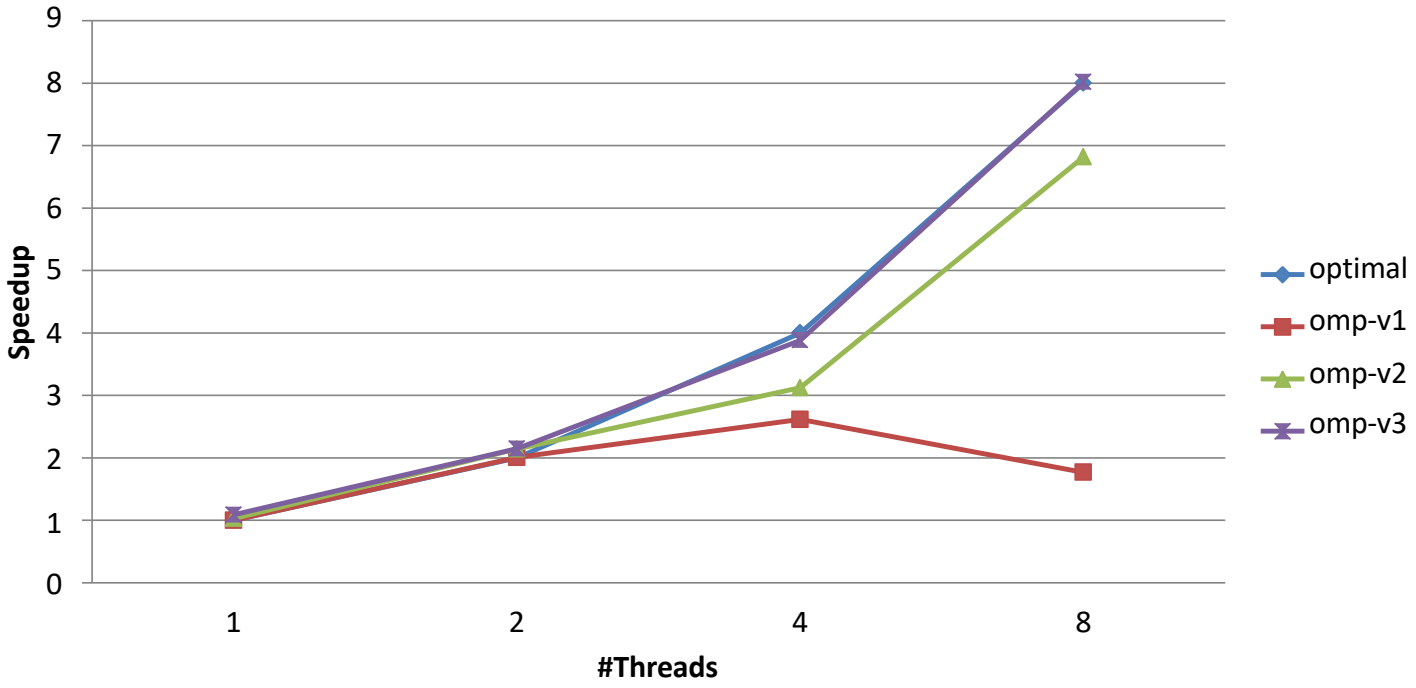

Example: Linked List using Tasks

- A typical C code that implements a linked list pointer chasing code is:

```
while(p != NULL){
  do_work(p->data);
  p = p->next;
}
```

- Can we implement the above code using tasks in order to parallelize the application?

Sudoko for Lazy Computer Scientists

- Find an empty field
- Insert a number
- Check Sudoku
  - (4 a) If invalid:
    - Delete number,
    - Insert next number
  - (4 b) If valid:
    - Go to next field

	6						8	11			15	14			16
15	11				16	14				12			6		
13		9	12					3	16	14		15	11	10	
2		16		11		15	10	1							
	15	11	10			16	2	13	8	9	12				
12	13			4	1	5	6	2	3					11	10
5		6	1	12		9		15	11	10	7	16			3
	2				10		11	6		5			13		9
10	7	15	11	16				12	13						6
9						1			2		16	10			11
1		4	6	9	13			7		11		3	16		
16	14			7		10	15	4	6	1				13	8
11	10		15				16	9	12	13			1	5	4
		12		1	4	6		16				11	10		
		5		8	12	13		10			11	2			14
3	16			10			7			6				12	

Sudoko for Lazy Computer Scientists

(1) Search an empty field

(2) Insert a number

(3) Check Sudoku

(4 a) If invalid:
Delete number,
Insert next number

(4 b) If valid:
Go to next field

	6														
15	11														
13		9	12												
2		16		11											
	15	11	10												
12	13			4	1	5	6	2	3					11	10
5		6	1	12		9		15	11	10	7	16			3
	2				10		11	6		5			13		9
10	7	15	11	16											
9															
1		4	6	9	13			7		11		3	16		
16	14			7		10	15	4	6	1				13	8
11	10		15				16	9	12	13			1	5	4
		12		1	4	6		16				11	10		
		5		8	12										
3	16			10											

```
first call contained in a
#pragma omp parallel
#pragma omp single
such that one tasks starts the
execution of the algorithm
```

```
#pragma omp task  needs to
work on a new copy  of the
Sudoku board
```

```
#pragma omp taskwait
wait for all child tasks
```

|| Brute-force Sudoku: Pseudocode

- OpenMP parallel region creates a team of threads

```
#pragma omp parallel
{
#pragma omp single
    solve_parallel(0, 0, sudoku2,false);
} // end omp parallel
```

  - Single construct: One thread enters the execution of `solve_parallel`
  - the other threads wait at the end of the single …
    - … and are ready to pick up tasks „from the work queue“

- Syntactic sugar (either you like it or you donot)

```
#pragma omp parallel sections
{
    solve_parallel(0, 0, sudoku2,false);
} // end omp parallel
```

|| Brute-force Sudoku: Implementation

```
for (int i = 1; i <= sudoku->getFieldSize(); i++) {
    if (!sudoku->check(x, y, i)) {
      #pragma omp task firstprivate(i,x,y,sudoku)
      {
            // create from copy constructor
            CSudokuBoard new_sudoku(*sudoku);
            new_sudoku.set(y, x, i);
            if (solve_parallel(x+1, y, &new_sudoku)) {
                new_sudoku.printBoard();
            }
      } // end omp task
    }
  }
  #pragma omp taskwait
```

```
#pragma omp task  needs to
work on a new copy  of the
Sudoku board
```

```
#pragma omp taskwait
wait for all child tasks
```

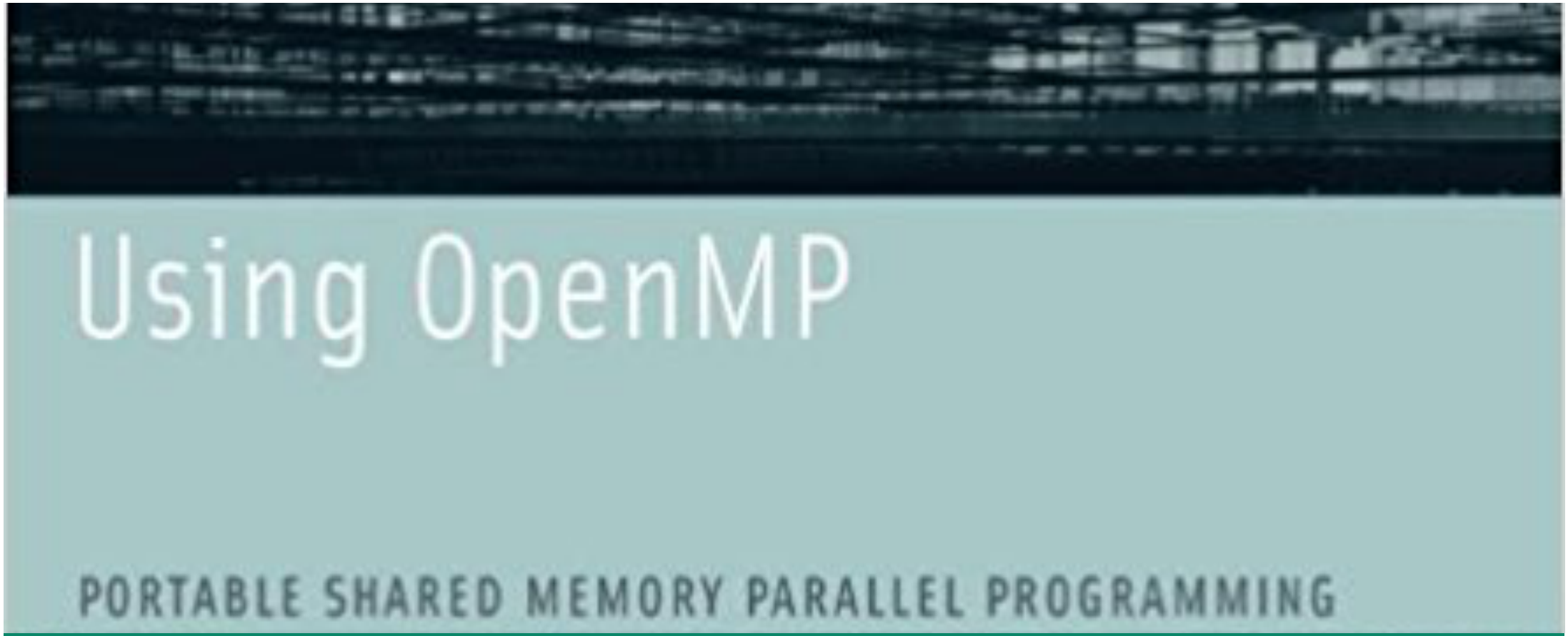

Environment Variables

False Sharing: OMP Example

```
double sum=0.0, sum_local[NUM_THREADS];
#pragma omp parallel num_threads(NUM_THREADS)
{
   int me = omp_get_thread_num();
   sum_local[me] = 0.0;
   #pragma omp for
   for (i = 0; i < N; i++)
      sum_local[me] += x[i] * y[i];
   #pragma omp atomic
      sum += sum_local[me];
}
```

Potential for false sharing on array sum_local

False Sharing: OMP Example

- The `sum_local` array is dimensioned according to the number of threads and is small enough to fit in a single cache line
- When executed in parallel, the threads modify different, but adjacent, elements of `sum_local`
- The cache line is invalidated for all processors

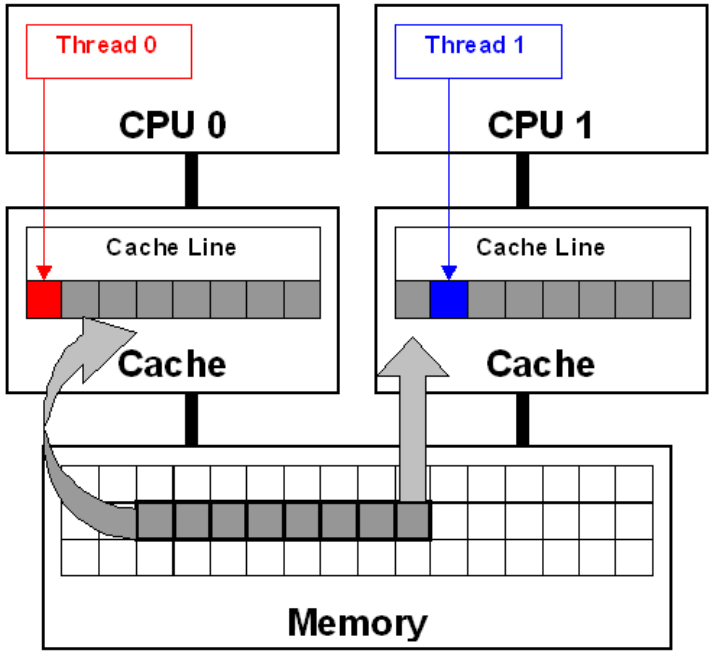

False Sharing: Solution

- Solution: ensure that variables causing false sharing are spaced far enough apart in memory that they cannot reside on the same cache line
- See: https://software.intel.com/sites/default/files/m/d/4/1/d/8/3-4-MemMgt_-_Avoiding_and_Identifying_False_Sharing_Among_Threads.pdf

Environment Variables

Name	Possible Values	Most Common Default
OMP_NUM_THREADS	Non-negative Integer	1 or #cores
OMP_SCHEDULE	„schedule [, chunk]“	„static, (N/P)“
OMP_DYNAMIC	{TRUE | FALSE}	TRUE
OMP_NESTED	{TRUE | FALSE}	FALSE
OMP_STACKSIZE	„size [B | K | M | G]“	-
OMP_WAIT_POLICY	{ACTIVE | PASSIVE}	PASSIVE
OMP_MAX_ACTIVE_LEVELS	Non-negative Integer	-
OMP_THREAD_LIMIT	Non-negative Integer	1024
OMP_PROC_BIND	{TRUE | FALSE}	FALSE
OMP_PLACES	Place List	-
OMP_CANCELLATION	{TRUE | FALSE}	FALSE
OMP_DISPLAY_ENV	{TRUE | FALSE}	FALSE
OMP_DEFAULT_DEVICE	Non-negative Integer	-

Nesting `parallel` Directives

- Nested parallelism can be enabled using the `OMP_NESTED` environment variable.
- If the `OMP_NESTED` environment variable is set to `TRUE`, nested parallelism is enabled.
- In this case, each parallel directive creates a new team of threads.

OpenMP Library Functions

- In addition to directives, OpenMP also supports a number of functions that allow a programmer to control the execution of threaded programs.

```
/* thread and processor count */
void omp_set_num_threads (int num_threads);
int omp_get_num_threads ();
int omp_get_max_threads ();
int omp_get_thread_num ();
int omp_get_num_procs ();
int omp_in_parallel();
```

OpenMP Library Functions

```
/* controlling and monitoring thread creation */
void omp_set_dynamic (int dynamic_threads);
int omp_get_dynamic ();
void omp_set_nested (int nested);
int omp_get_nested ();
/* mutual exclusion */
void omp_init_lock (omp_lock_t *lock);
void omp_destroy_lock (omp_lock_t *lock);
void omp_set_lock (omp_lock_t *lock);
void omp_unset_lock (omp_lock_t *lock);
int omp_test_lock (omp_lock_t *lock);
```

- In addition, all lock routines also have a nested lock counterpart for recursive mutexes.

Environment Variables in OpenMP

- OMP_NUM_THREADS: This environment variable specifies the default number of threads created upon entering a parallel region.
- OMP_SET_DYNAMIC: Determines if the number of threads can be dynamically changed.
- OMP_NESTED: Turns on nested parallelism.
- OMP_SCHEDULE: Scheduling of for-loops if the clause specifies runtime

Closing Comments: Explicit Threads Versus Directive Based Programming

- Directives layered on top of threads facilitate a variety of thread-related tasks.
- A programmer is rid of the tasks of initializing attributes objects, setting up arguments to threads, partitioning iteration spaces, etc.
- There are some drawbacks to using directives as well.
- An artifact of explicit threading is that data exchange is more apparent. This helps in alleviating some of the overheads from data movement, false sharing, and contention.
- Explicit threading also provides a richer API in the form of condition waits, locks of different types, and increased flexibility for building composite synchronization operations.
- Finally, since explicit threading is used more widely than OpenMP, tools and support for Pthreads programs are easier to find.