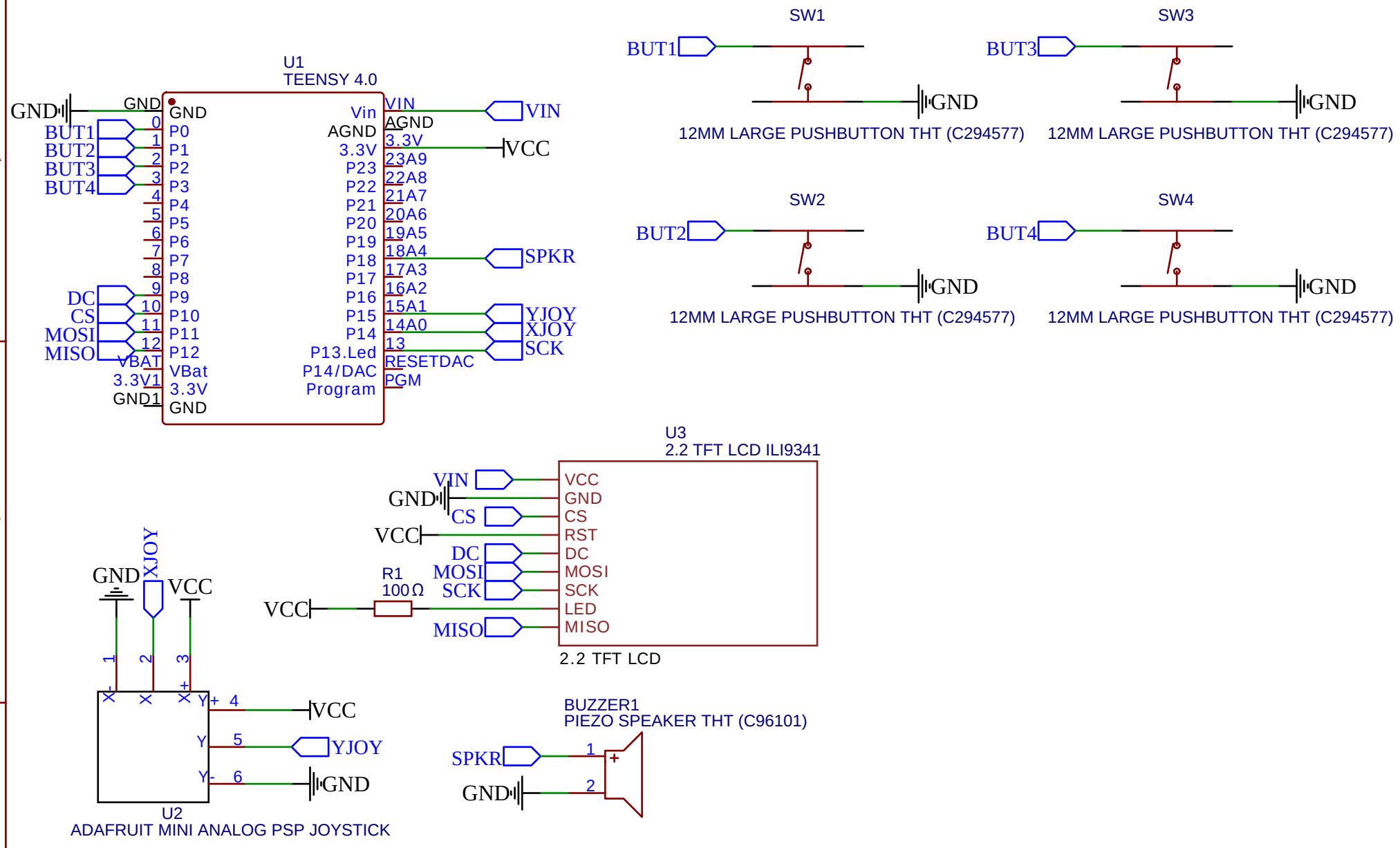

TITLE: GAMEPAD	REV: 1.0
Company: Harmony Petty	Sheet: 1/1
Date: 2021-03-22 Drawn By: harmonypetty	