Assignment: Final Design Report

Description: Remember that the only ones who can determine how "good" your design is are the stakeholders. You have to be able to describe the value of your design to them in words that they will understand. During the design process, you tried to capture that value in terms of meeting the Feature set. For the "final report" you will produce a marketing brochure to try to convince high schools to adopt your design and participate in the competition. This brochure will be used in our ECE362 competition to determine your team's rank in the Feature column. A MS Word template for the brochure can be found on Moodle and an image of it is shown below. This document will describe the expectations and rubrics that will be used to assess your score.

Evaluation of your work will be based on the following rubrics:

Item	Exemplary	Adequate	Inadequate
Metrics Table	All metrics from your team's table have been updated. All include a verification method and verification methods are appropriate for metric. Clear indication of whether each metric is met or not.	All metrics from your table are present and updated. Verification methods are present for each, but could be more appropriate. Clear indication of whether each metric is met or not.	Showing only table from template without updating your team's information. Verification methods are too sparse or inappropriate to be helpful. Not clear whether each metric is met.
Feature Justification	Every Feature is explained clearly using engineering language. References back to specific metrics are included and explained clearly. There are no vague descriptions of the quality of the design. Well thought out and clear explanations for why certain metrics were not met and reasonable fixes are provided.	Every Feature is explained, but some could be more detailed. Some use of vague language but not overly reliant. Significant use of references back to specific metrics. Unmet requirements are mentioned but could be described more accurately and with more appropriate fixes.	Some Features are not explained. Unmet requirements are not explained well or not at all. Weak explanations are provided for unmet requirements. Unreasonable fixes are provided for unmet requirements.

Final Design Report
Date: 5/25/2025
Team: Team 11 “Empty Net”
Members: Henry Stern, Owen Macrowski, Yejia Hao, Henry Jung
Section:01

I. Feature and metric achievement table

Provide your Features and metrics table, but this time with only the Verification column and a new column that specifies whether or not you met each metric as verified by your brief verification process description. Make sure that your table below includes any extra features that you identified as well as any changes to metrics that you made per your validation methods. Table 1 shown below is the original table from the beginning of the term.

Table 1: Features and Metrics table.

Feature	ID	Attribute/Metric	We will test this in our prototype by… (Verfification)	Design Satisfies Metric Y/N
Functional-Power Supply	FP1.0	The power supply will power the vehicle for 60 seconds, recharge wirelessly for 90 seconds, and go for another 30 seconds while it is maneuvering around either course	In Figure 7, our designed power supply went through such a power cycle and the voltage across capacitor bank is always within the limit to power the vehicle.	Y
	FP1.1	The power supply will provide at least a 1.2A continuous current to the vehicle when the vehicle is moving around the track during the duration in FP1.0	In Figure 1, the power supply provides continuous voltage output with 1.2A continuous discharge current	Y
	FP1.2	The power supply will provide a voltage between 12V max and 5.5V min to the vehicle for the duration in FP1.0	In Figure 1, the maximum voltage provided by the power supply is 10.22V, and the minimum voltage provided in the time period defined by FP1.0 is 5.54V.	Y
	FP1.3	The power supply will be able to source peak currents up to 2.4A for 5s without damage.	In Figure 5, the power supply is continuously supplying 2.4A current for 11.95 seconds and keep suppling power without damage.	Y
	FP2.0	The power supply will recharge rapidly	We meet the expectation in FP2.1	Y
	FP2.1	The power supply will charge from 0V to 10.5V in 7 minutes or less using the wireless charger.	In Figure 3, the wireless charger charges the power supply from 0.7V to 10.7V in 385 seconds (6 minutes 25 seconds).	Y
	FP2.2	The power supply will charge from 0V to 10.5V in 3 minutes or less using the wired charger.	In Figure 4, the wired charger charges the power supply from 0.28V to 10.36V in 202.92 seconds (3 minutes 23 seconds)	N

	FP2.3	The power supply will be charged from a wireless transmitter and receiver that adhere to the Qi standard [https://www.wirelesspowerconsortium.com].	We use the provided Qi charge bundle during the test and the race	Y
	FP2.4	The power supply will be charged by a wired 120V AC to 12V DC power supply from the parts room.	In In Figure 2, the wired 1A charger charges the power supply from 0.5V to 10.4V in 396 seconds.	Y
	FP3.0	The power supply will change from wired to wireless charging and vice versa with a simple user interaction	As shown in Figure 8, we use the same power jacket connector for both wireless and wired charger in the power supply board.	Y
	FP4.0	The power supply will supply the ESP32 with power while recharging using the wireless charger.	In Figure 6, the power supply is continuously supply voltage when it is charging.	Y
Functional-Controller	FC1.0	The controller will drive the vehicle autonomously around both tracks for the duration specified in FP1.0	During the data collection in Table 3, the controller successfully drives the vehicle autonomously around direction of the track. Our system meets this requirement.	Y
	FC1.1	The vehicle will start moving around the track when prompted by the user	https://imgur.com/a/bmw3OxO Seen turning on/off on command at 0:25s. The vehicle dashboard allows the user to remotely start and stop the vehicle.	Y
	FC1.2	The vehicle must stop moving within 2 seconds of the final timer ending.	https://imgur.com/a/bmw3OxO Same video as above shows stopping after button click, is within one second.	Y
	FC1.3	The vehicle will go around tracks in both directions.	https://imgur.com/a/bmw3OxO Second video on website above shows the vehicle driving the other direction. The vehicle follows the line relatively poorly, there is still some adjustment needed.	Y
	FC 1.4	The controller will produce less than a three lap difference between the battery and designed power supply for the same run protocol specified in FP1.0.	As shown in Table 3, the controller produce less than one lap difference between the battery and the designed power supply. Our system meets this requirement.	Y
	FC2.0	The controller will log data at intervals of at least every 0.5 second.	The screen recording (video-20250528-155648-cc319468.mov) shows that the data can be logged every 0.5 seconds. Arduino code in github shows 500ms interval	Y

	FC3.0	The system will log voltage, current, and power data with respect to time for a given run around a track.	The deployed web (video-20250528-155648-cc319468.mov) can log data live as soon as the esp32 board connects to Wi-Fi. Live voltage, current, and power consumption along with battery level can be monitored	Y
	FC4.0	At the end of the run, the system will provide 1) the total energy used by the vehicle during the whole run and 2) the energy gained in refueling during the run	The total energy consumed tab (video-20250528-155648-cc319468.mov) is shown at the bottom of the dashboard, and the recharging battery can be monitored while connected to the charger.	Y
Safety	S1	The power supply will prevent reverse polarization and overcharging of capacitors as long as they are within specified capacitance tolerance (do not assume all capacitors have the same capacitance)	In the schematic shown in Figure 11 Schematic of Capacitor Array Board each capacitor is in parallel with a Zener diode that prevents reverse polarization and limits the charging voltage of individual capacitors up to 2.5V	Y
	S2	The power supply must fit on the vehicle without changing any other function of the vehicle.	As shown in Figure 8, Figure 9, the power supply fit on the vehicle using existing screw holes and utilize unused space above the ESP32 controller	Y
	S3	The power supply must securely attach to the vehicle chassis without any permanent modifications to the chassis (i.e. no glue, new holes, etc.)	As shown in Figure 9, the power supply is attached to the chassis using 3D printed support and screws (see left half PCB on this picture, the orange pillars between boards are the 3D printed support)	Y
	S4	The vehicle should operate within reasonable speeds and directions. The vehicle should not be capable of injuring participants in the competition by means of force.	In Figure 12, the UI allows the user to dynamically 61.48203control the motor speed. Competing students can choose a safe speed base on their own risk preference.	Y
Affordable	A1	The sum cost of all parts soldered to the power supply PCB will be less than $120.	As shown in Table 2, the sum cost of parts is $61.48	Y
Educational	E1	The hardware/software design will provide an educational experience of electrical and computer engineering to the high-school students	As shown in **Error! Reference s ource not found.**, our system has several reconfiguration switches allowing high school students to navigate thorough and change the configurations. The components are also organized in functional regions to guide the understanding of the hardware.	Y
Enjoyable	*EJ1*	*The project will place students into a more open-ended environment rather than the closed*	We have all our codes open sourced and published to GitHub. The	Y

		environment like regular courses. Less constraints on the project will allow flexible brainstorming, allowing students to generate interesting ideas.	designed power supply is very modulated and inviting students to design their own power control board without redesigning the capacitor array	
Robustness	*R1*	*Following a collision, each component on the vehicle must stay put and not fall off or disconnect.*	As shown in Figure 9, the power supply is attached to the chassis using 3D printed support and screws. All electrical components are soldered on the boards and can resist a reasonable mechanical collision.	Y

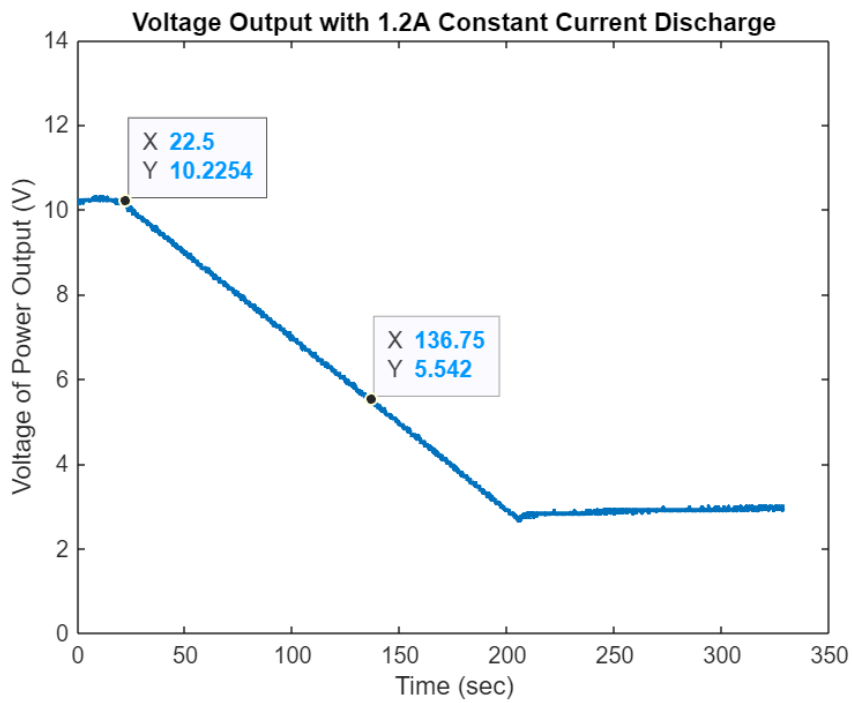

Figure 1

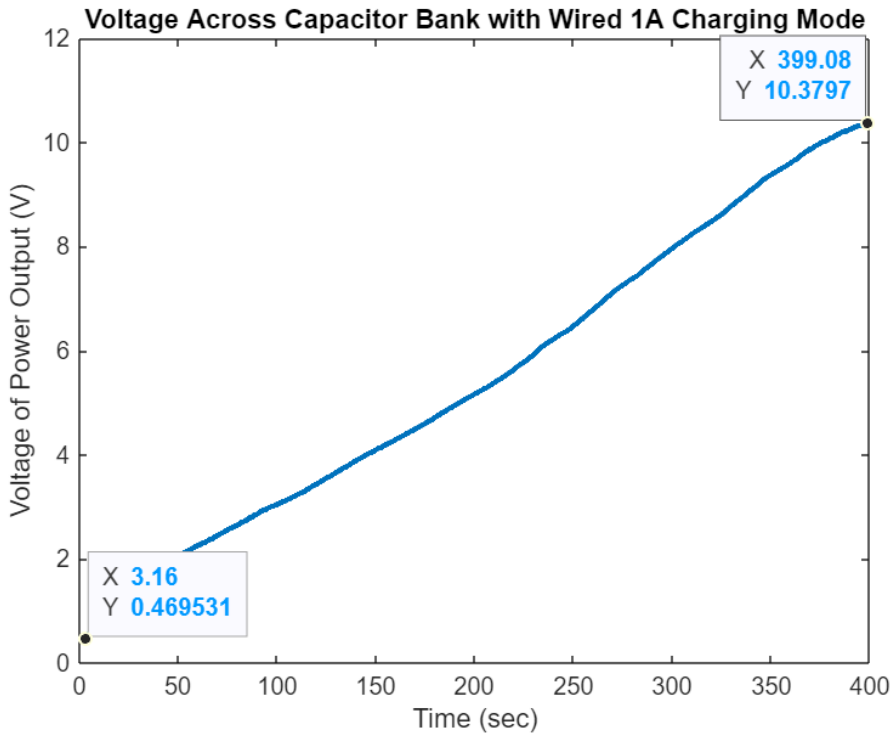

Figure 2

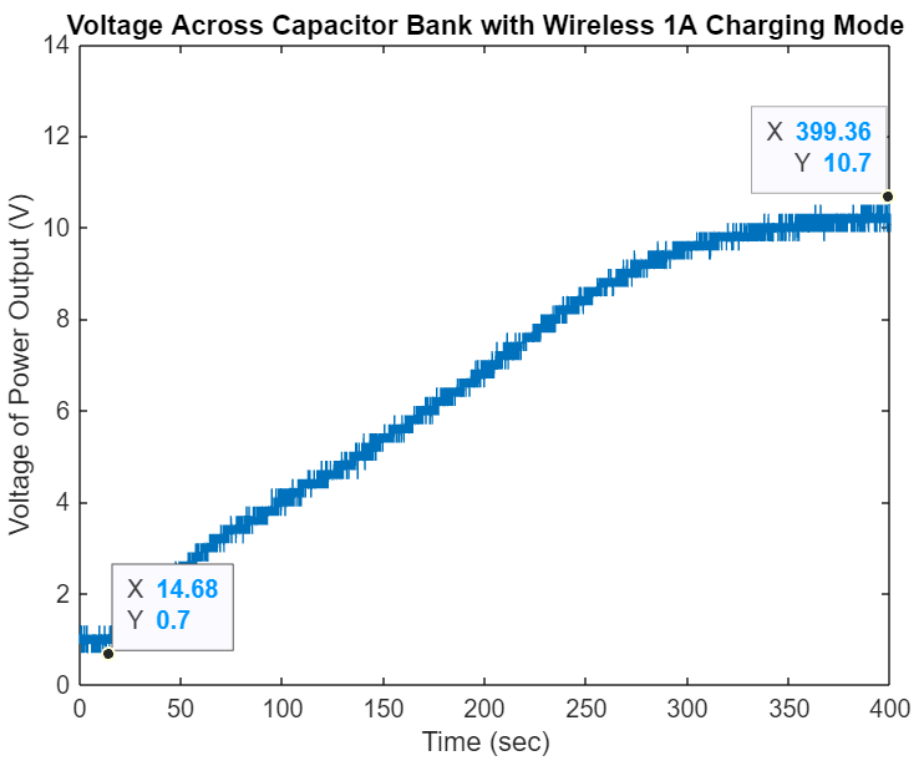

Figure 3

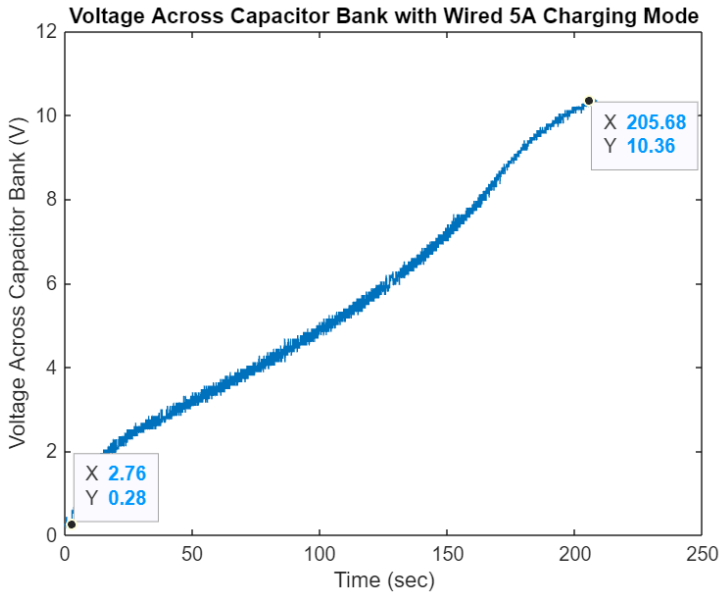

Figure 4

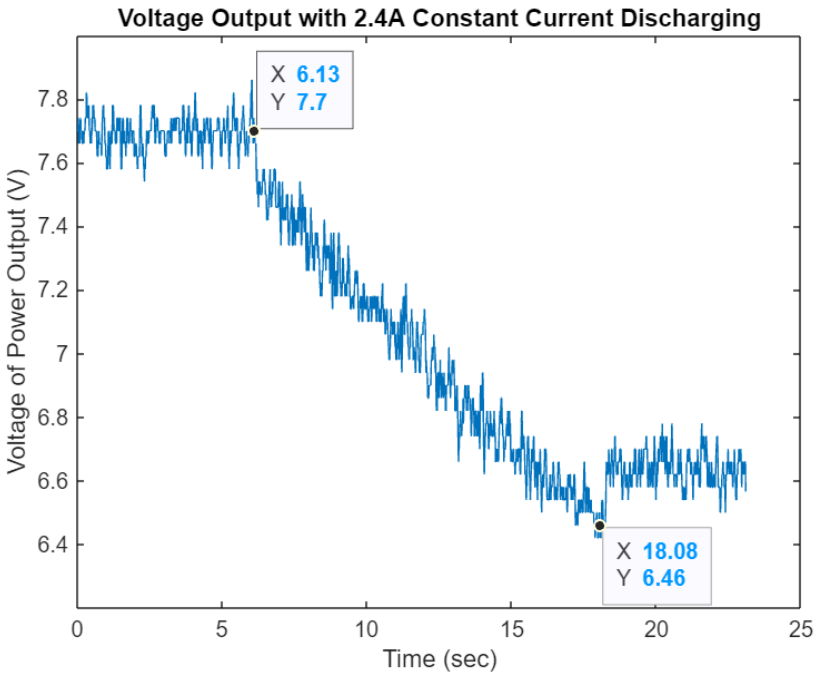

Figure 5

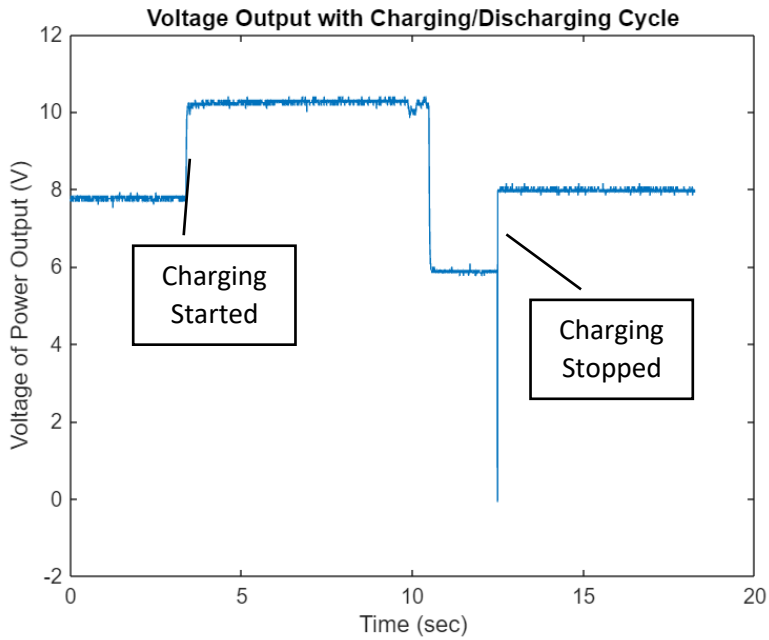

Figure 6

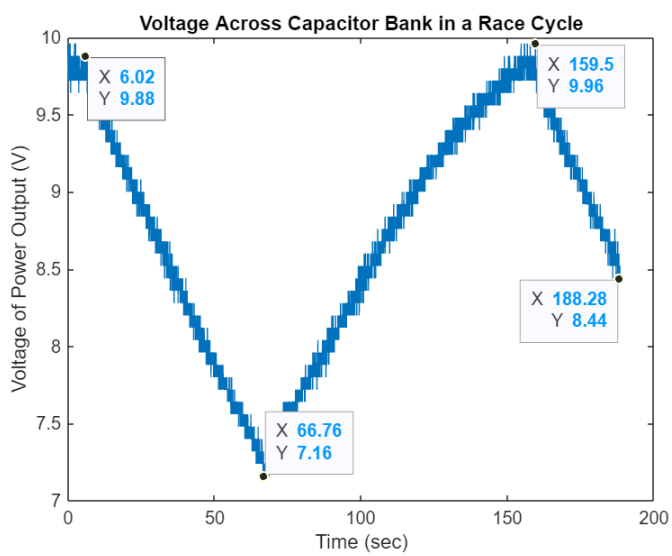

Figure 7

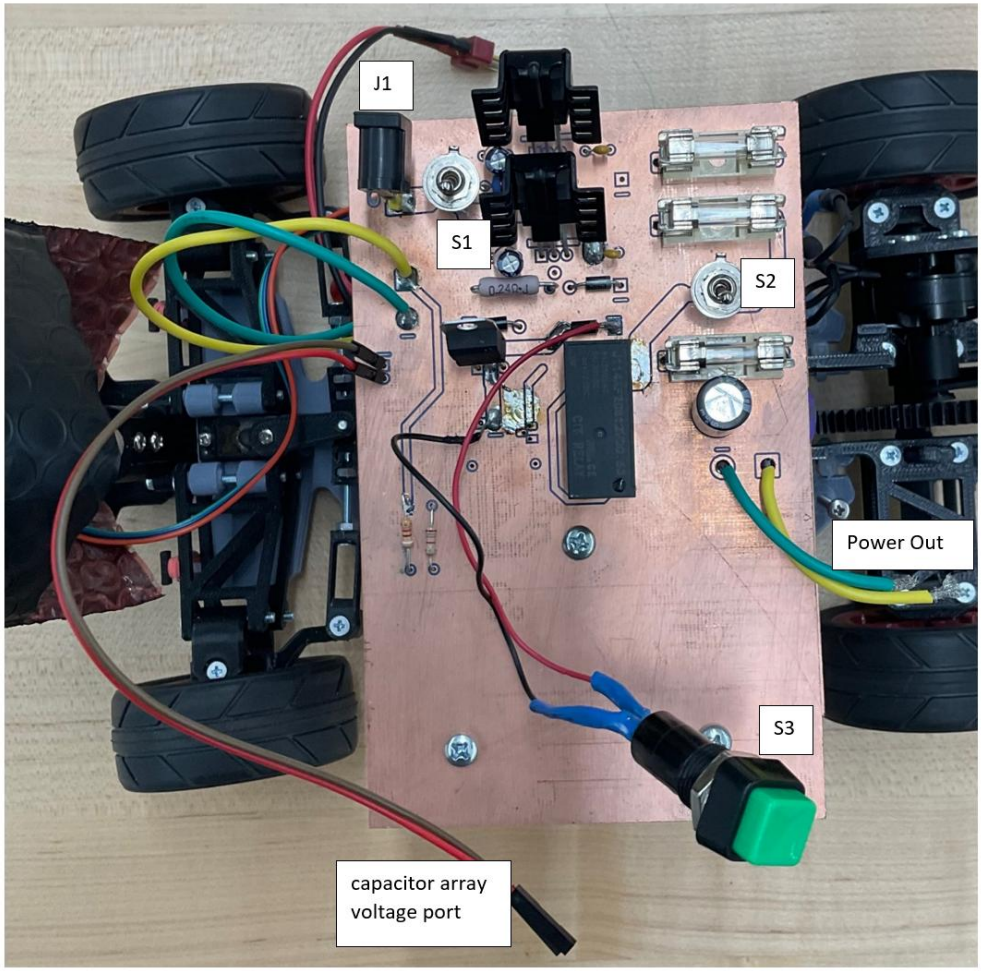

Figure 8

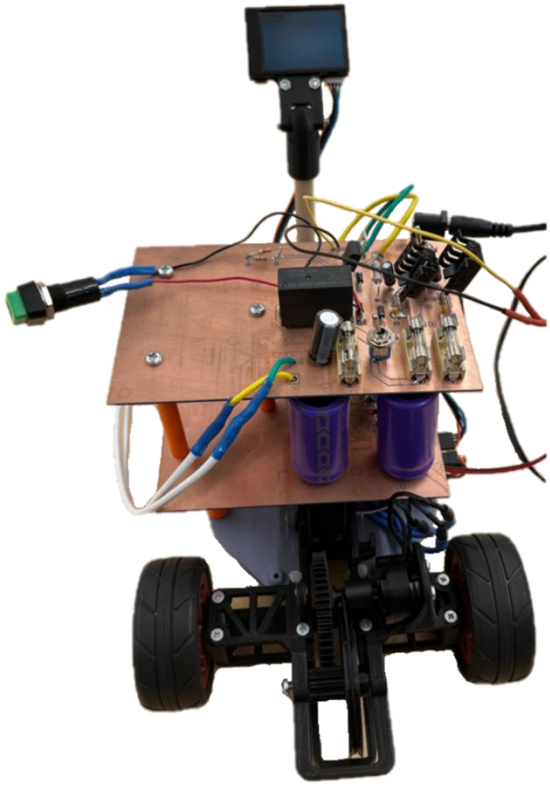

Figure 9 Overview picture of the vehicle

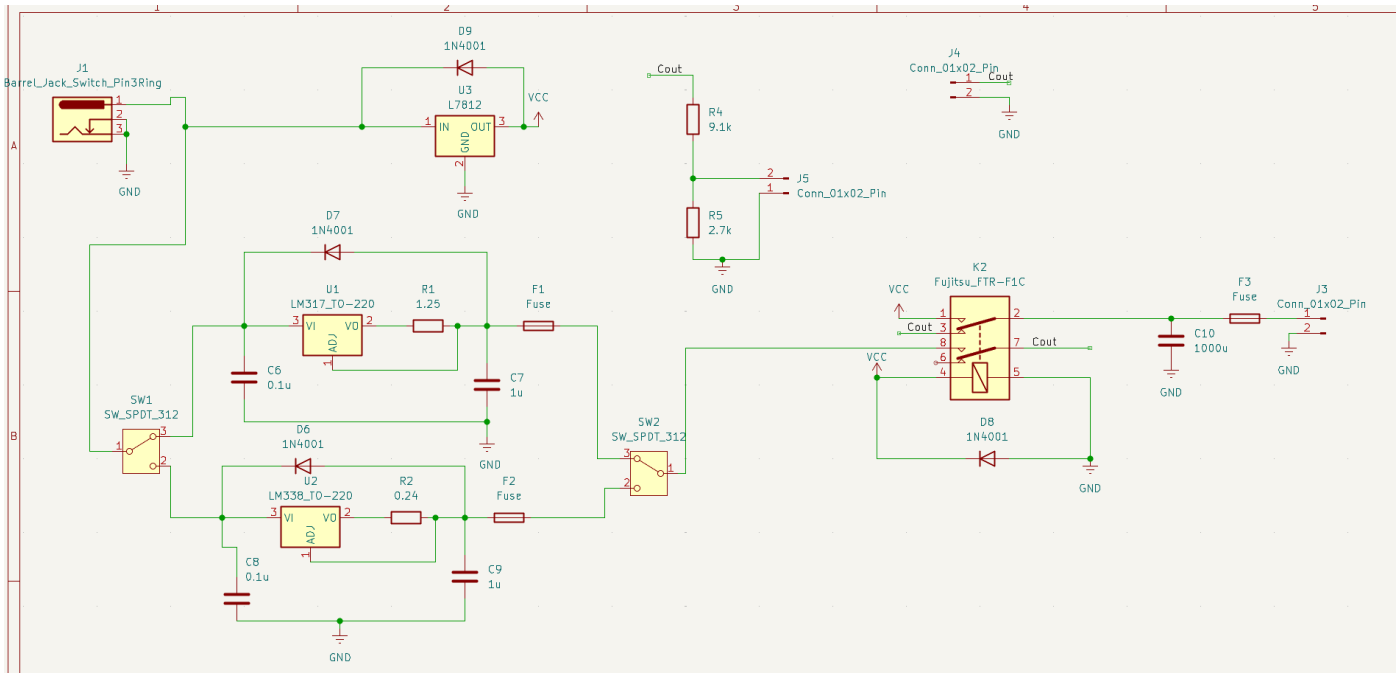

Figure 10 Schematic of Power Control board

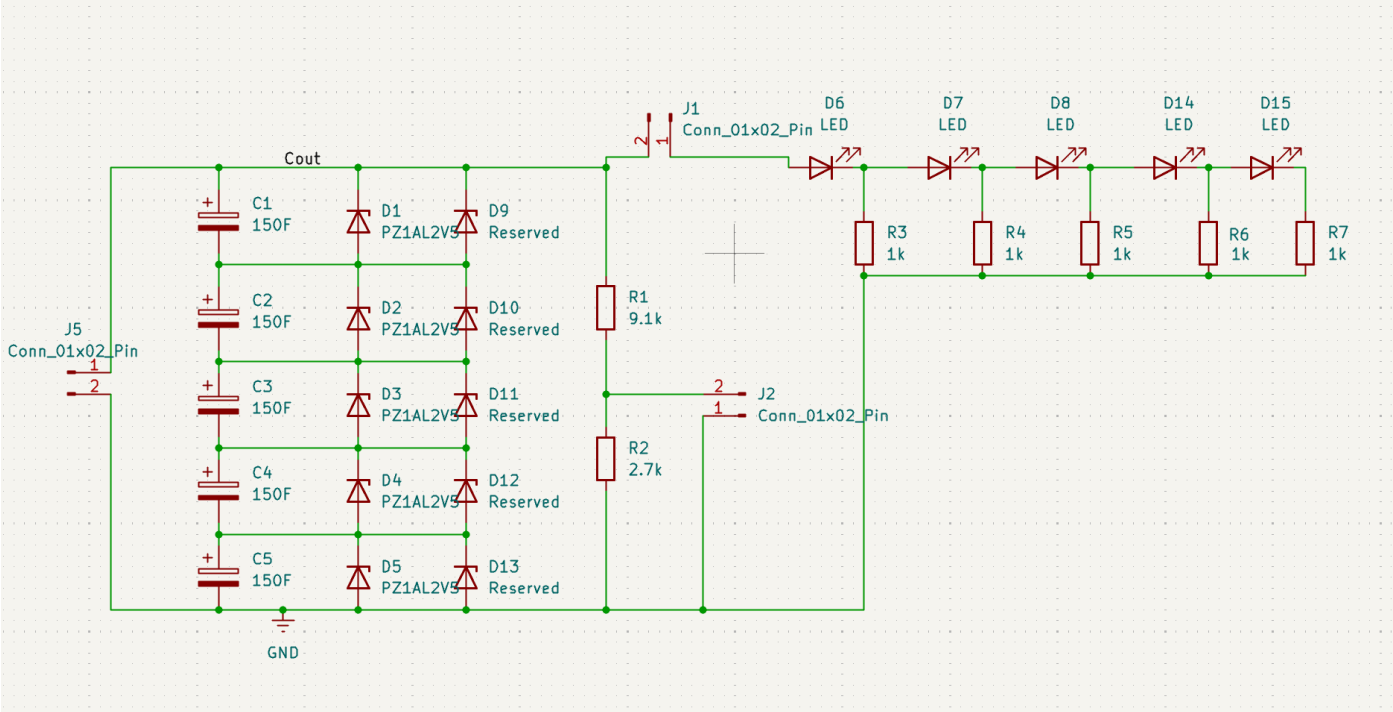

Figure 11 Schematic of Capacitor Array Board

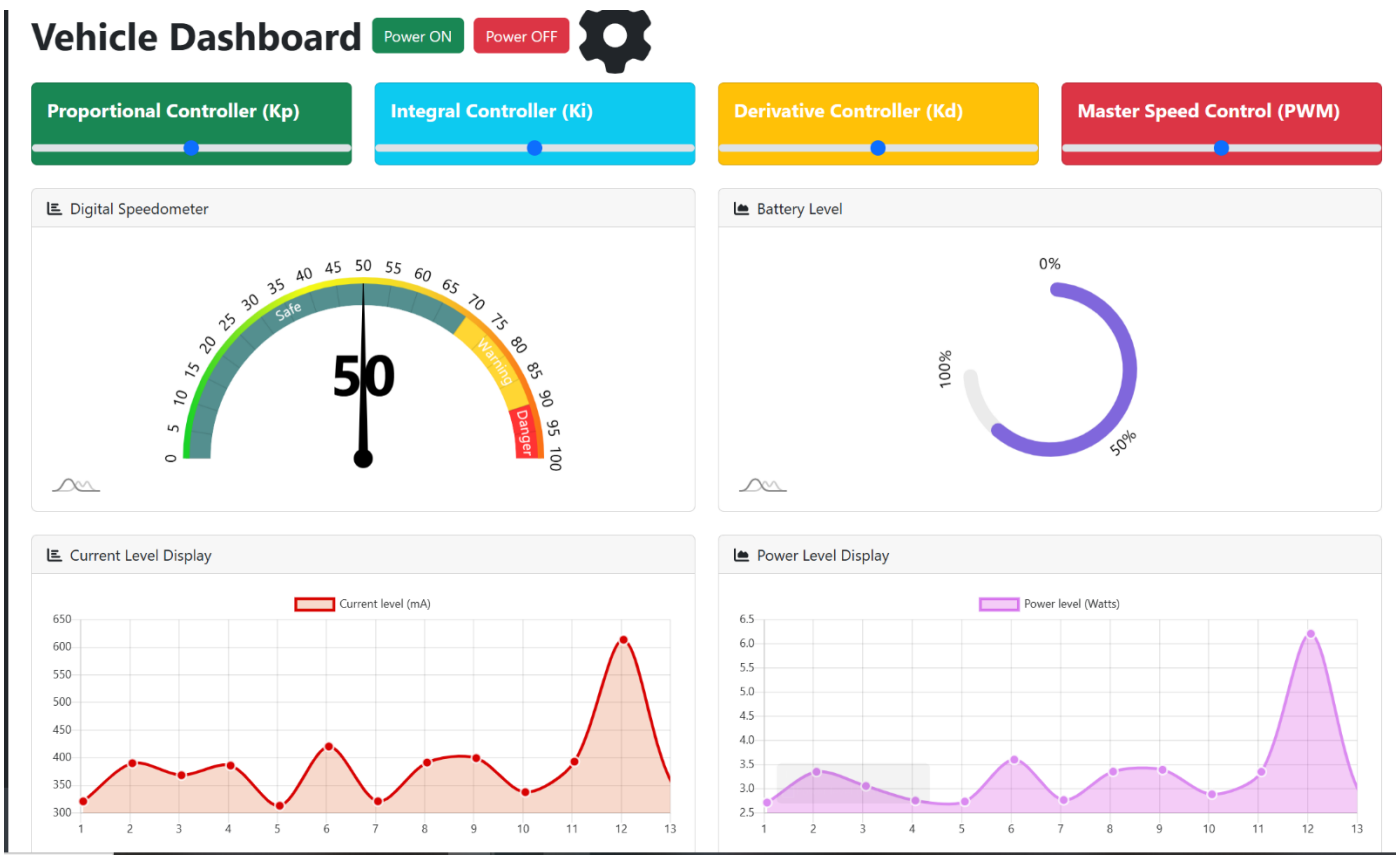

Figure 12 Screenshot of UI Dashboard

Table 2 Actual BOM on board

	Part name	Description	Purchase link	Quantity	Unit price	Price
Supercapacitor bank	SCZ2R7157	Super capacitor	https://www.digikey.com/en/products/detail/sruite-electronic-technology-us/SCZ2R7157/16996134	5	$ 7.62	$ 38.10
	PZ1AL2V5B_R1_00001	Zener diode for charge balancing	https://www.digikey.com/en/products/detail/panjit-international-inc/PZ1AL2V5B-R1-00001/15801137	5	$ 0.25	$ 1.24
Current limiter	LM317T	Current limiter	Parts room	1	$ 0.50	$ 0.50
	LM7812	Voltage regulator	Parts room	1	$ 0.50	$ 0.50
	LM338	Current limiter	https://www.digikey.com/en/products/detail/texas-instruments/LM338T-NOPB/212669	1	$ 2.12	$ 2.12
	2.4Ohm resistor	Current limiter	https://www.digikey.com/en/products/detail/riedon-products-by-bourns/PF2472-2R4F1/2448314	1	$ 9.10	$ 9.10
	2A fuse		Parts room	2	$ 1.00	$ 2.00
	5A fuse		Parts room	1	$ 1.00	$ 1.00
	1.25 Ohm 2W resistor	https://www.digikey.com/en/products/detail/te-connectivity-passive-product/ROX2SG1R2/2385272		1	$ 0.23	$ 0.23
	0.24 Ohm 2W resistor	https://www.digikey.com/en/products/detail/koa-speer-electronics-inc/MOSX2CT52RR24J/15276299		1	$ 0.30	$ 0.30
Charging control	SPST switch	Parts room		2	$ 1.00	$ 2.00
	DPDT relay	https://www.digikey.com/en/products/detail/cit-relay-and-switch/J114AF2CS12VDC-53/14002081		1	$ 2.39	$ 2.39
Connector and accessories	Powerjack PTH	Parts room		1	1	$ 1.00
	Fuse fox	Used to hold the fust	Parts room	2	$ 0.50	$ 1.00
				Total: **$ 61.48**		

Table 3 Lap test Results of Vehicle

Clockwise				**Counter Clockwise**			
Capacitors		**Battery**		**Capacitors**		**Battery**	
90 Seconds:		90 Seconds:		90 Seconds:		90 Seconds:	
Lap 1	15.55	Lap 1	14	Lap 1	15.75	Lap 1	14.65
Lap 2	12.31	Lap 2	13.28	Lap 2	12.95	Lap 2	14.13
Lap 3	12.715	Lap 3	13.28	Lap 3	13.51	Lap 3	14.13
Lap 4	12.72	Lap 4	13.18	Lap 4	14.56	Lap 4	13.94
Lap 5	11.81	Lap 5	13.33	Lap 5	14.55	Lap 5	14.23
Lap 6	12.71	Lap 6	13.36	Lap 6	13.81	Lap 6	14.3
Lap 7	11.53	Lap 7	10.41 (75%)	Lap 7	12.7	Lap 7	5.73 (30%)
Recharge:	45 Sec.	Recharge:	45 Sec.	Recharge:	45 Sec.	Recharge:	45 Sec.
45 Seconds:		45 Seconds:		45 Seconds:		45 Seconds:	
Lap 1	15.4	Lap 1	15	Lap 1	14.5	Lap 1	14.91
Lap 2	15	Lap 2	14.2	Lap 2	13.2	Lap 2	14.18
Lap 3	13.5	Lap 3	13.3	Lap 3	12.6	Lap 3	13.85

II. Overall Feature achievement description

Use Table 2 to describe how well your design achieves each Feature. Avoid vague adjectives such as "Our design met this Feature well". This is where you have to explain "well" in engineering terms. Your descriptions need to refer back to specific metrics that you did or did not achieve. If you were unable to achieve a metric, please state why your design didn't achieve it and what you would change in your design so that you think it could achieve it. A beginning of an example description is provided to give you some sense of the type of writing that is expected.

Feature	**Describe how well you achieved the Feature in your design**
Functional Power supply	Our power supply was able to provide power to the vehicle for the duration of the run. However, we did not charge the vehicle using wired charger as fast as required in the feature table. We think this is because we design our system towards high total capacity of the capacitor while sacrificing some of the charging speed. We also intentionally reduce the charging current to avoid triggering the overcurrent protection of the charger. We would fix this in our design by having more precise control of current controllers or having smaller total capacitance. In our competition, we also found that the vehicle would lose power during charging-discharging transition. This issue can be solved by redesigning the relay control logic.
Functional Controller	Our PID Controller is able to function properly within the throttle range during our tests. However, we found that too fast of a speed will cause the Husky lens acquisitions to be slower than the actual processed data. In our competition, we found that our PID controller is not very stable, especially passing turnings of the track at high speed. We have to manually reduce the speed of the vehicle when it is approaching the turnings and increase the speed again when reaching the straight lines. We would improve this situation by having further tuning of our PID parameter or using a more advanced control scheme. We also noticed in the competition that our vehicle requires some time to startup and connect with the internet to remotely control with the

Safety	Our design uses fuses and a relay to ensure that the hardware does not exceed the specified tolerances. In our tests, we never run into catastrophic over current or short circuit accidents. During the development periods, we have blown our fuse a few times; this implies the effectiveness of our current safety design. With the software, we have a way to turn the vehicle off remotely no matter what state it is in.
Affordable	The total price of our components mount on PCB is within the budget cap. We are satisfied with our current affordability, but it is still possible to reduce the total price even more. Some of the hardware parts, such as 7812 regulator and the relay, are put on the board providing higher stability of this prototypical design. In following revisions, we can remove these components from our board to achieve a lower total cost.
Educational	We design our hardware in a modular way. It is customizable, the two piece PCB design allows separation between Capacitor bank and the charging module itself, while high school students can customize their own new PCB to have better understanding of the engineering concept behind it. The bare copper board allowing a better view for debugging and learning purposes.
Enjoyable	Vehicle dashboard provides comfortable user interface that does not complicate things into a boring manner. The controller parameters and speed can be dynamically adjusted while the vehicle is running,
Robustness	In our development, we accidentally collide the vehicle to wall in full throttle, and the whole system is still functional after the collision. This reflects that the vehicle is able to handle collisions at a fairly high speed. We also have the fuses exist for extra safety in case of accidental short circuits due to metal objects. We attach our PCB to the car using 3D printed stand of