© International Baccalaureate Organization 2025

All rights reserved. No part of this product may be reproduced in any form or by any electronic or mechanical means, including information storage and retrieval systems, without the prior written permission from the IB. Additionally, the license tied with this product prohibits use of any selected files or extracts from this product. Use by third parties, including but not limited to publishers, private teachers, tutoring or study services, preparatory schools, vendors operating curriculum mapping services or teacher resource digital platforms and app developers, whether fee-covered or not, is prohibited and is a criminal offense.

More information on how to request written permission in the form of a license can be obtained from https://ibo.org/become-an-ib-school/ib-publishing/licensing/applying-for-a-license/.

© Organisation du Baccalauréat International 2025

Tous droits réservés. Aucune partie de ce produit ne peut être reproduite sous quelque forme ni par quelque moyen que ce soit, électronique ou mécanique, y compris des systèmes de stockage et de récupération d'informations, sans l'autorisation écrite préalable de l'IB. De plus, la licence associée à ce produit interdit toute utilisation de tout fichier ou extrait sélectionné dans ce produit. L'utilisation par des tiers, y compris, sans toutefois s'y limiter, des éditeurs, des professeurs particuliers, des services de tutorat ou d'aide aux études, des établissements de préparation à l'enseignement supérieur, des fournisseurs de services de planification des programmes d'études, des gestionnaires de plateformes pédagogiques en ligne, et des développeurs d'applications, moyennant paiement ou non, est interdite et constitue une infraction pénale.

Pour plus d'informations sur la procédure à suivre pour obtenir une autorisation écrite sous la forme d'une licence, rendez-vous à l'adresse https://ibo.org/become-an-ib-school/ib-publishing/licensing/applying-for-a-license/.

© Organización del Bachillerato Internacional, 2025

Todos los derechos reservados. No se podrá reproducir ninguna parte de este producto de ninguna forma ni por ningún medio electrónico o mecánico, incluidos los sistemas de almacenamiento y recuperación de información, sin la previa autorización por escrito del IB. Además, la licencia vinculada a este producto prohíbe el uso de todo archivo o fragmento seleccionado de este producto. El uso por parte de terceros —lo que incluye, a título enunciativo, editoriales, profesores particulares, servicios de apoyo académico o ayuda para el estudio, colegios preparatorios, desarrolladores de aplicaciones y entidades que presten servicios de planificación curricular u ofrezcan recursos para docentes mediante plataformas digitales—, ya sea incluido en tasas o no, está prohibido y constituye un delito.

En este enlace encontrará más información sobre cómo solicitar una autorización por escrito en forma de licencia: https://ibo.org/become-an-ib-school/ib-publishing/licensing/applying-for-a-license/.

Diploma Programme
Programme du diplôme
Programa del Diploma

Physics
Higher level
Paper 2

6 November 2025

Zone A morning | **Zone B** morning | **Zone C** morning

Candidate session number

2 hours 30 minutes

Instructions to candidates

- Write your session number in the boxes above.
- Do not open this examination paper until instructed to do so.
- Answer all questions.
- Answers must be written within the answer boxes provided.
- A calculator is required for this paper.
- A clean copy of the **physics data booklet** is required for this paper.
- The maximum mark for this examination paper is **[90 marks]**.

22 pages

8825–6709
© International Baccalaureate Organization 2025

24EP01

International Baccalaureate
Baccalauréat International
Bachillerato Internacional

Answer **all** questions. Answers must be written within the answer boxes provided.

1. A spherical oil droplet is released from rest at the bottom of a column of water.

The graph shows the variation with time *t* of the vertical velocity of the oil droplet.

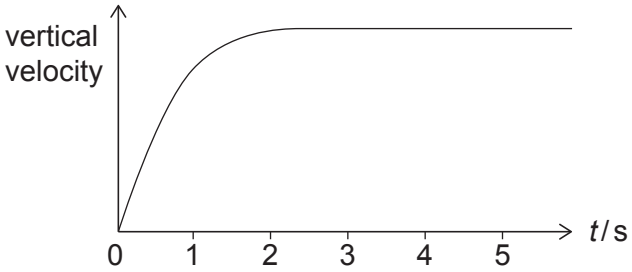

(a) The following data are available:

radius of the oil droplet = 3.5 mm

weight of the oil droplet = 1.6×10^{-3} N

density of the water = 1000 kg m^{-3}

viscosity of the water = 1.1×10^{-3} Pa s

(i) Show that the volume of the oil droplet is about 2×10^{-7} m^3. [1]

. . . . . .

. . . . . .

(ii) Calculate the initial acceleration of the oil droplet. [3]

. . . . . .

. . . . . .

. . . . . .

. . . . . .

. . . . . .

. . . . . .

. . . . . .

. . . . . .

(This question continues on the following page)

(Question 1 continued)

(b) Describe why the acceleration of the oil droplet changes. [2]

. . . . . .

. . . . . .

. . . . . .

. . . . . .

(c) (i) Explain why the velocity of the oil droplet is constant for $t > 3\,\text{s}$. [2]

. . . . . .

. . . . . .

. . . . . .

. . . . . .

(ii) Deduce the velocity of the oil droplet for $t > 3\,\text{s}$. [2]

. . . . . .

. . . . . .

. . . . . .

. . . . . .

. . . . . .

. . . . . .

2. A student is investigating the emf and internal resistance of a cell, using the circuit shown. The ammeter and the voltmeter are ideal.

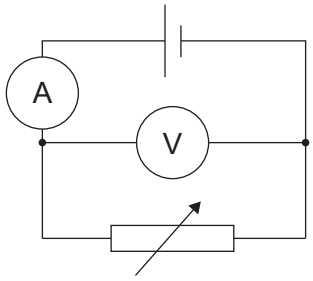

The graph shows the variation of the voltmeter reading V with the ammeter reading I.

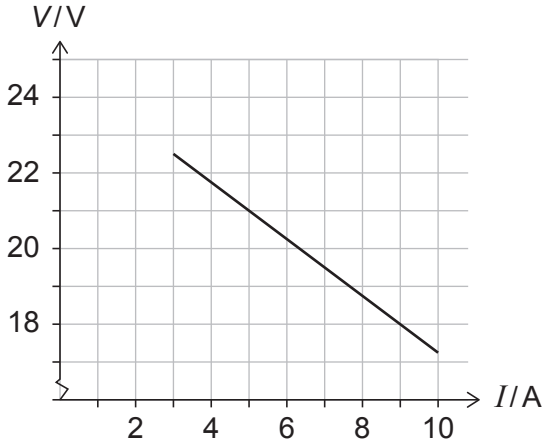

(a) Explain why V changes when the resistance of the variable resistor is changed. [2]

. . . . . .

. . . . . .

. . . . . .

. . . . . .

(b) Show that the internal resistance of the cell is about $0.8\,\Omega$. [2]

. . . . . .

. . . . . .

. . . . . .

. . . . . .

(This question continues on the following page)

(Question 2 continued)

(c) Determine the emf of the cell. [2]

. . . . . .

. . . . . .

. . . . . .

. . . . . .

(d) The student then replaces the variable resistor with an electric heating element in order to investigate the thermal output of the system. The heating element is used to raise the temperature of the water to the boiling point.

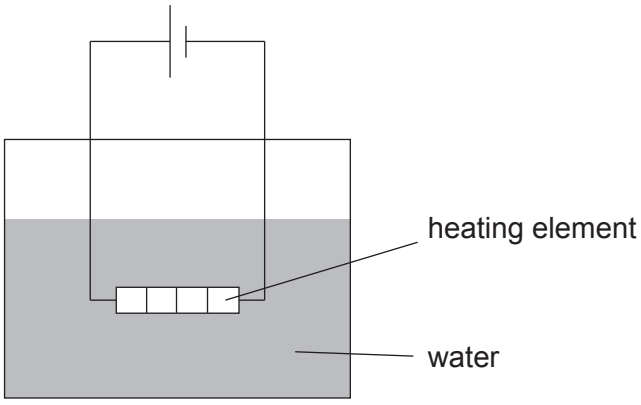

After the boiling point is reached, 12 g of the water are vaporized. The specific latent heat of vaporization of water is $2.3 \times 10^6\,\mathrm{J\,kg^{-1}}$.

(i) Calculate the change in entropy of the vaporized water. [2]

. . . . . .

. . . . . .

. . . . . .

. . . . . .

(ii) Explain why this entropy change is positive. [1]

. . . . . .

. . . . . .

Please **do not** write on this page.

Answers written on this page
will not be marked.

3. A mass–spring system oscillates on a frictionless horizontal surface with simple harmonic motion. The mass m oscillates with angular frequency ω.

The total energy is $E_T = \frac{1}{2}m\omega^2 x_0^{\ 2}$, where x_0 is the maximum displacement.

(a) Show that E_T can be written as $E_T = \frac{1}{2}kx_0^{\ 2}$, where k is the spring constant. [2]

. . . . . .

. . . . . .

. . . . . .

. . . . . .

In a first trial, the spring is compressed by 0.15 m, and the mass is released from rest.

(b) Calculate the maximum elastic potential energy of this system.

$$k = 24.5\,\mathrm{N\,m^{-1}}$$ [1]

. . . . . .

. . . . . .

(c) In a second trial, the mass is doubled, and the spring is compressed by the same amount as before.

Determine $\dfrac{\text{maximum speed of the mass in the first trial}}{\text{maximum speed of the mass in the second trial}}$. [2]

. . . . . .

. . . . . .

. . . . . .

. . . . . .

4. A metal rod is pulled along two horizontal conducting rails X and Y so that it rolls to the right at a constant speed. The two rails are connected by a straight conducting wire of Length $L = 0.60\,\text{m}$. The system is in a region of uniform magnetic field of magnitude $B = 1.2\,\text{T}$ directed into the page.

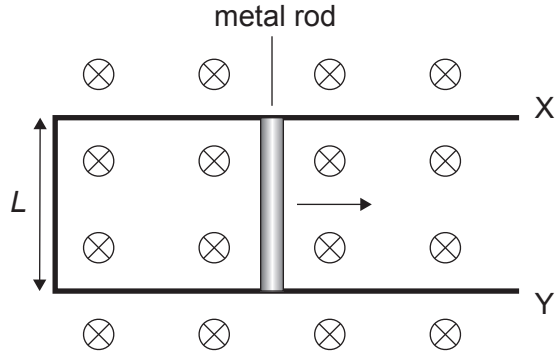

(a) As a result of the motion, the metal rod experiences a magnetic force of 0.084 N.

(i) Show that the current in the metal rod is about 0.1 A. [1]

. . . . . .

. . . . . .

(ii) State the direction of the magnetic force on an electron in the metal rod. [1]

. . . . . .

. . . . . .

(iii) The magnitude of the magnetic field on the right-hand side of the rod is different from that on the left-hand side. Explain why. [3]

. . . . . .

. . . . . .

. . . . . .

. . . . . .

. . . . . .

. . . . . .

(This question continues on the following page)

(Question 4 continued)

(iv) Outline how Lenz's law applies to this system. [2]

. . . . . .

. . . . . .

. . . . . .

. . . . . .

(b) Determine, using your answer from (a)(i), the force per unit length between rails X and Y. State the fundamental SI units for your answer. [3]

. . . . . .

. . . . . .

. . . . . .

. . . . . .

. . . . . .

. . . . . .

5. A moon M orbits a planet P. The graph shows the variation of the gravitational potential V_g with distance r. The graph is drawn between the surface of M and the surface of P.

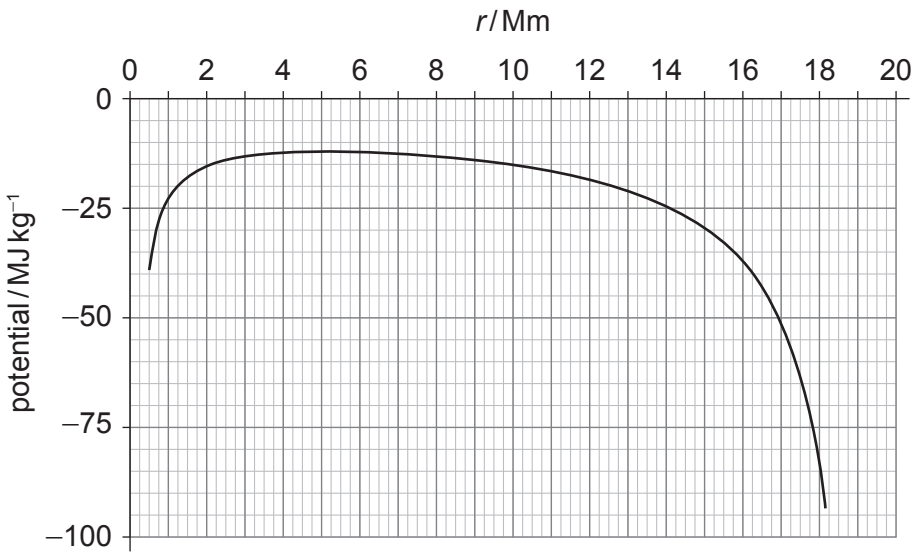

(a) Determine the gravitational field strength at $r = 15\,\text{Mm}$. [2]

. . . . . .

. . . . . .

. . . . . .

. . . . . .

(This question continues on the following page)

(Question 5 continued)

(b) The distance between the centres of M and P is 19.6 Mm.

(i) Determine the radius of P. [1]

. . . . . .

. . . . . .

(ii) A spacecraft travels from the surface of P to the surface of M. The work done by the gravitational force on the spacecraft to reach M is -8.1×10^{10} J.

Calculate the mass of the spacecraft. [2]

. . . . . .

. . . . . .

. . . . . .

. . . . . .

6. A short-range attractive force operates between nucleons.

(a) (i) State the name of this force. [1]

. . . . . .

. . . . . .

(ii) State and explain **one** piece of evidence that suggests the presence of this force. [2]

. . . . . .

. . . . . .

. . . . . .

. . . . . .

(b) Radioactive potassium-40 ($^{40}_{19}K$) undergoes β^- decay to form a nuclide of calcium (Ca).

(i) Write down the complete equation for this radioactive decay. [2]

$^{40}_{19}K \rightarrow$

(ii) In one decay, a negative beta particle is emitted at a speed of $580\,m\,s^{-1}$.

Calculate the de Broglie wavelength of the beta particle. [1]

. . . . . .

. . . . . .

(This question continues on the following page)

(Question 6 continued)

(c) A sample of potassium has a mass of 5.00 g. The sample contains 0.012 % of potassium-40 by mass. The remainder of the sample is a stable nuclide of potassium. The half-life of potassium-40 is 1.28×10^{9} years.

(i) Show that the decay constant of potassium-40 is about $1.7 \times 10^{-17}\,s^{-1}$. [1]

. . . . . .

. . . . . .

(ii) The mass of one mole of potassium is $39.1\,g\,mol^{-1}$.

Determine the initial activity of the sample. [2]

. . . . . .

. . . . . .

. . . . . .

. . . . . .

(iii) Estimate the time taken for the potassium-40 to decrease to 98 % of the initial amount. [2]

. . . . . .

. . . . . .

. . . . . .

. . . . . .

7. Star A is a main sequence star.

The data for Star A and the Sun are given in a table.

	Value
Surface temperature of Star A	5200 K
Surface temperature of the Sun	5800 K
Parallax angle	0.74 arcsec
Radius of Star A	$0.9\,R_\odot$
Radius of the Sun	$R_\odot$
Luminosity of the Sun	$L_\odot$

(a) (i) State how physical stability is maintained in main sequence stars. [1]

. . . . . .

. . . . . .

(ii) Explain why nuclear fusion in the core of the star occurs when the temperature and density exceed threshold values. [2]

. . . . . .

. . . . . .

. . . . . .

. . . . . .

(iii) Outline why regions of convection form in Star A. [2]

. . . . . .

. . . . . .

. . . . . .

. . . . . .

(This question continues on the following page)

(Question 7 continued)

(b) (i) Calculate, in m, the distance to Star A from Earth. [1]

. . . . . .

. . . . . .

(ii) Show that the luminosity of Star A is about half that of the Sun. [1]

. . . . . .

. . . . . .

. . . . . .

(iii) Deduce the apparent brightness of Star A compared to the apparent brightness of the Sun. [3]

. . . . . .

. . . . . .

. . . . . .

. . . . . .

. . . . . .

. . . . . .

(This question continues on the following page)

(Question 7 continued)

(c) (i) Show that the peak wavelength emitted from Star A is about 560 nm. [1]

. . . . . .

. . . . . .

(ii) Calculate the energy of a photon of light emitted at this peak wavelength. [2]

. . . . . .

. . . . . .

. . . . . .

. . . . . .

(iii) The peak wavelength of the radiation from Star A is measured by an observer on Earth. The observed wavelength is 0.007 % less than the value in (c)(i).

Outline how this difference arises. [2]

. . . . . .

. . . . . .

. . . . . .

. . . . . .

(iv) Determine the speed, in $km\,s^{-1}$, of Star A relative to Earth. [2]

. . . . . .

. . . . . .

. . . . . .

. . . . . .

(This question continues on the following page)

(Question 7 continued)

(d) Describe how the light from stars is studied to determine their composition. [3]

. . . . . .

. . . . . .

. . . . . .

. . . . . .

. . . . . .

. . . . . .

8. A boat is moved from land to water by rolling it across a set of cylindrical airbags.

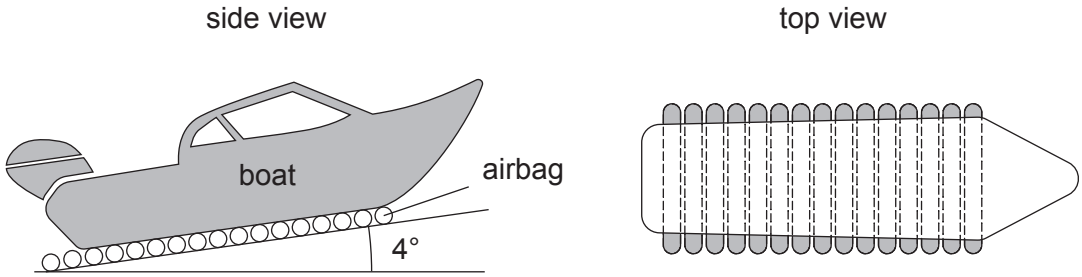

(a) When fully inflated, an unloaded airbag has a diameter of 1.80 m and a length of 24.0 m. At a temperature of 15 °C, an airbag can hold 4200 mol of gas.

(i) Show that the pressure in an airbag is about 0.2 MPa. [2]

. . . . . .

. . . . . .

. . . . . .

. . . . . .

When the boat is placed on the airbags, the airbags are compressed so that the effective contact area is as shown in the diagram.

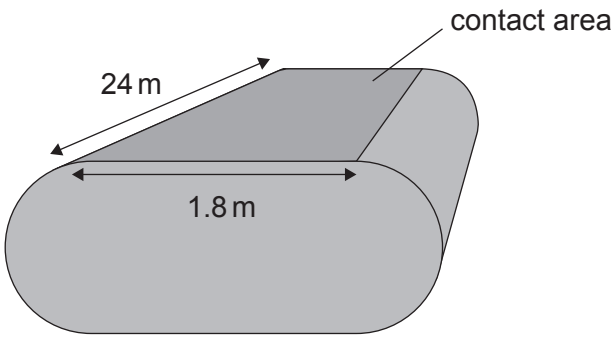

In this arrangement, the maximum safe pressure before an airbag bursts is four times the value calculated in (a)(i). The boat is supported by airbags on a slope that is at an angle of 4.0° to the horizontal. There are fifteen airbags supporting the boat at all times.

(This question continues on the following page)

(Question 8 continued)

(ii) Estimate the maximum safe mass that this arrangement can hold. [3]

. . . . . .

. . . . . .

. . . . . .

. . . . . .

. . . . . .

. . . . . .

(iii) Identify an assumption used in this estimation. [1]

. . . . . .

. . . . . .

The boat is then released to roll down across the airbags. When the boat loses contact with an airbag at the top of the slope, the airbag expands adiabatically.

(iv) Outline the change in internal energy of the gas in the airbag. [2]

. . . . . .

. . . . . .

. . . . . .

. . . . . .

(This question continues on the following page)

(Question 8 continued)

(b) A boat is released from rest down the slope, and it travels 14 m in 8.0 s. The mass of the boat is 4.5×10^6 kg.

(i) Calculate the average acceleration of the boat. [1]

. . . . . .

. . . . . .

(ii) Show that the net resistive forces on the boat are about 1.1 MN. [2]

. . . . . .

. . . . . .

. . . . . .

. . . . . .

(iii) Draw a free-body diagram for the boat while it is moving. [2]

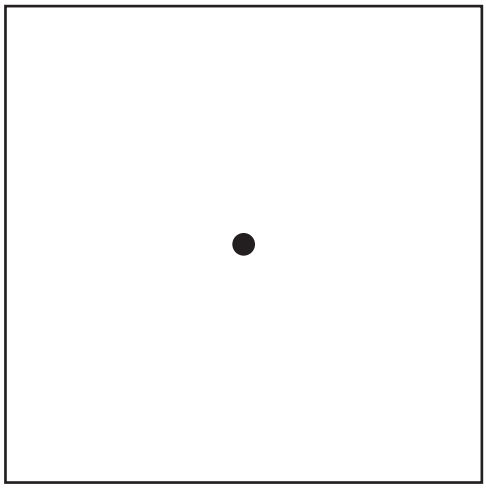

(This question continues on the following page)

(Question 8 continued)

(c) Another way to move a boat down a ramp is to place it on rigid rods. Assume that the same boat is now moved on rods of diameter 1.80 m with the same boat acceleration as before.

(i) Show that the angular displacement of a rod during the first 8.0 s of the motion is about 8 rad. [1]

. . . . . .

. . . . . .

(ii) Outline how two frictional forces lead to the angular acceleration of the rod. [2]

. . . . . .

. . . . . .

. . . . . .

. . . . . .

(This question continues on the following page)

(Question 8 continued)

(d) During the testing of the rod, it is rotated about its central axis. Point P is on the surface of the rod. At time $t = 0$, P is at a point 45° above the horizontal. The linear speed of P is $2.0\,\mathrm{m\,s^{-1}}$.

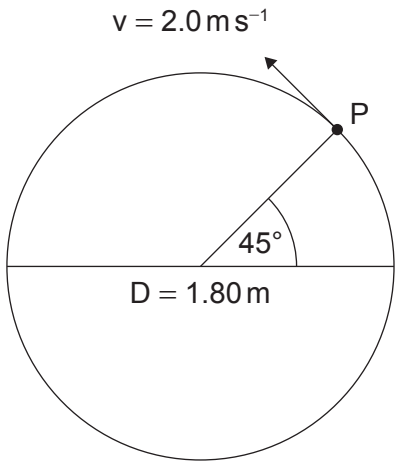

The vertical displacement x of P can be modelled with an equation $x = x_0 \sin(\omega t + \phi)$.

(i) Calculate the angular velocity ω of P. [1]

. . . . . .

. . . . . .

(ii) Calculate the time it will take for P to reach the top of the circle. [1]

. . . . . .

. . . . . .

(iii) Determine the vertical velocity of P at $t = 3.0\,\mathrm{s}$. [2]

. . . . . .

. . . . . .

. . . . . .

. . . . . .

Please **do not** write on this page.

Answers written on this page
will not be marked.

Please **do not** write on this page.

Answers written on this page
will not be marked.