www.sciencemag.org/cgi/content/full/science.1195596/DC1

Supporting Online Material for

Optomechanically Induced Transparency

Stefan Weis, Rémi Rivière, Samuel Deléglise, Emanuel Gavartin,
Olivier Arcizet, Albert Schliesser, Tobias J. Kippenberg*

*To whom correspondence should be addressed. E-mail: tobias.kippenberg@epfl.ch

Published 11 November 2010 on *Science* Express
DOI: 10.1126/science.1195596

This PDF file includes:

SOM Text
Figs. S1 to S3
References

Supporting Online Material for Optomechanically induced transparency

Stefan Weis[1,2,†], Rémi Rivière[2,†], Samuel Deléglise[1,2,†], Emanuel Gavartin[1], Olivier Arcizet[3], Albert Schliesser[1,2], Tobias J. Kippenberg[1*]

[1]Ecole Polytechnique Fédérale de Lausanne, EPFL, 1015 Lausanne, Switzerland

[2]Max-Planck-Institut für Quantenoptik, Hans-Kopfermann-Str. 1, 85748 Garching, Germany

[3]Institut Néél, 25 rue des Martyrs, 38042 Grenoble, France.

*To whom correspondence should be addressed; E-mail: tobias.kippenberg@epfl.ch.

†These authors contributed equally to this work.

Contents

1 Derivation of OMIT **2**

2 Comparison with EIT in Atomic Physics **6**

3 Simplifications in the weak coupling case **7**

4 Experimental setup **9**

5 Measurement using the phase modulation scheme **9**

6 Group delay **13**

7 Theoretical treatment of a splitted resonance **13**

8 Relation of OMIT to coherent mixing of mechanical excitations **16**

9 Table of symbols **17**

1 Derivation of OMIT

In the following, we derive the expressions describing the optomechanical equivalent of Electromagnetically Induced Transparency (EIT), as discussed in (*1, 2*), as well as more recent analysis (*3*). The starting point of the following analysis is the Hamiltonian formulation of a generic optomechanical system put forward by Law (*4*).

1.1 Hamiltonian

If the free spectral range of the cavity is much larger than the mechanical oscillation frequency, such that only one optical mode is coupled to the mechanical mode, the optomechanical Hamiltonian can be written as:

$$\hat{H} = \hat{H}_{\mathrm{mech}} + \hat{H}_{\mathrm{opt}} + \hat{H}_{\mathrm{int}} + \hat{H}_{\mathrm{drive}} \tag{S1}$$

$$\hat{H}_{\mathrm{mech}} = \frac{\hat{p}^2}{2m_{\mathrm{eff}}} + \frac{1}{2} m_{\mathrm{eff}} \Omega_{\mathrm{m}}^2 \hat{x}^2 \tag{S2}$$

$$\hat{H}_{\mathrm{opt}} = \hbar\omega_{\mathrm{c}} \left(\hat{a}^\dagger \hat{a} + \frac{1}{2} \right) \tag{S3}$$

$$\hat{H}_{\mathrm{int}} = \hbar G \hat{x}\, \hat{a}^\dagger \hat{a} \tag{S4}$$

$$\hat{H}_{\mathrm{drive}} = i\hbar \sqrt{\eta_{\mathrm{c}} \kappa} \left(s_{\mathrm{in}}(t) \hat{a}^\dagger - s_{\mathrm{in}}^*(t) \hat{a} \right), \tag{S5}$$

where $\hat{x}$ and $\hat{p}$ are the position and momentum operators of the mechanical degree of freedom having effective mass m_{eff} and angular frequency Ω_m, and $s_{\mathrm{in}}(t)$ is the drive amplitude normalized to a photon flux at the input of the cavity. $\hat{a}$ and $\hat{a}^\dagger$ are the annihilation and creation operators of the cavity mode. We have furthermore used the coupling parameter $\eta_{\mathrm{c}} \equiv \kappa_{\mathrm{ex}}/\kappa_0 + \kappa_{\mathrm{ex}}$, where κ_0 denotes the intrinsec loss rate and κ_{ex} the external loss rate (i.e. wave guide coupling). Experimentally, the parameter η_{c} can be continuously adjusted by tuning the taper-resonator gap (*5, 6*).

We will solve this problem for a driving field $s_{\mathrm{in}}(t) = \left(\bar{s}_{\mathrm{in}} + \delta s_{\mathrm{in}}(t)\right) e^{-i\omega_{\mathrm{l}} t}$, where ω_{l} is the driving laser frequency, and we deliberately identify $\bar{s}_{\mathrm{in}} = s_{\mathrm{l}}$. We will then first derive the linearized Langevin equations (*7*) for a generic perturbation term $\delta s_{\mathrm{in}}(t)$ before identifying it with the probe field $\delta s_{\mathrm{in}}(t) = s_{\mathrm{p}} e^{-i(\omega_{\mathrm{p}} - \omega_{\mathrm{l}})t}$.

1.2 Langevin equations

In a frame rotating at $\omega_{\rm l}$ with $\Delta = \omega_{\rm l} - \omega_{\rm c}$, we obtain:

$$\frac{d}{dt}\hat{a}(t) = \left(+i\Delta - \frac{\kappa}{2}\right)\hat{a}(t) - iG\hat{x}(t)\hat{a}(t) + \sqrt{\eta_{\rm c}\kappa}\, s_{\rm in}(t) + \sqrt{(1-\eta_{\rm c})\kappa}\,\delta\hat{s}_{\rm vac}(t) \tag{S6}$$

$$\frac{d}{dt}\hat{x}(t) = \frac{\hat{p}(t)}{m_{\rm eff}} \tag{S7}$$

$$\frac{d}{dt}\hat{p}(t) = -m_{\rm eff}\Omega_{\rm m}^2\hat{x}(t) - \hbar G\hat{a}^\dagger(t)\hat{a}(t) - \Gamma_{\rm m}\hat{p}(t) + \delta\hat{F}_{\rm th}(t), \tag{S8}$$

where the decay rates for the optical (κ) and mechanical oscillators (Γ_m) have been introduced classically, and $\delta\hat{s}_{\rm vac}(t)$ and $\delta\hat{F}_{\rm th}(t)$ are the quantum and thermal noise terms (*8*). We first denote $\bar{a}$ and $\bar{x}$ the intracavity field and mechanical displacement for the static solution, in which all time derivatives vanish and $s_{\rm p} \to 0$. From (S6)(S8), it follows immediately that $\bar{a}$ and $\bar{x}$ must fulfill the self consistent equations:

$$\bar{a} = \frac{\sqrt{\eta_{\rm c}\kappa}}{-i(\Delta - G\bar{x}) + \kappa/2}\bar{s}_{\rm in} \tag{S9}$$

$$\bar{x} = \frac{\bar{a}^2}{m_{\rm eff}\Omega_m^2}, \tag{S10}$$

where we have assumed a to be real and positive. This system can give rise to bistability for sufficiently strong control fields (*9*) (*7*). However, for weak and detuned control fields, only one solution exists and $|\bar{a}|^2 \propto \eta_{\rm c}\bar{s_{\rm in}}^2$. We then linearize the problem for $\delta\hat{a} \ll |\bar{a}|$, plugging the ansatz $\hat{a}(t) = \bar{a} + \delta\hat{a}(t)$ and $\hat{x}(t) = \bar{x} + \delta\hat{x}(t)$ into equations (S6)(S7)(S8) and retain only first order terms in the small quantities $\delta\hat{a}$, $\delta\hat{a}^\dagger$ and $\delta\hat{x}$. We then obtain

$$\frac{d}{dt}\,\delta\hat{a}(t) = \left(+i\bar{\Delta} - \frac{\kappa}{2}\right)\delta\hat{a}(t) - iG\bar{a}\delta\hat{x}(t) + \sqrt{\eta_{\rm c}\kappa}\delta s_{\rm in}(t) + \sqrt{(1-\eta_{\rm c})\kappa}\,\delta\hat{s}_{\rm vac}(t) \tag{S11}$$

$$\frac{d^2}{dt^2}\,\delta\hat{x}(t) + \Gamma_{\rm m}\frac{d}{dt}\,\delta\hat{x}(t) + \Omega_{\rm m}^2\delta\hat{x}(t) = -\frac{\hbar G}{m_{\rm eff}}\bar{a}\left(\delta\hat{a}(t) + \delta\hat{a}^\dagger(t)\right) + \delta\hat{F}_{\rm th}(t), \tag{S12}$$

where we used the Hermitian property $\delta\hat{x}(t) = \delta\hat{x}^\dagger(t)$ in equation (S11), and introduced the corrected detuning $\bar{\Delta} = \Delta - G\bar{x}$. Since the drives are weak, but classical coherent fields, we will identify all operators with their expectation values $y(t) \equiv \langle\hat{y}(t)\rangle$, and drop the quantum and thermal noise terms: which average to 0.

1.3 Solution

1.3.1 General solution

We now have to solve the equations of the expectation values for the drive (in the rotating frame) $\delta s_{\rm in}(t) = s_{\rm p} e^{-i(\omega_{\rm p}-\omega_{\rm l})t}$. For a given $\Omega = \omega_{\rm p} - \omega_{\rm l}$ we use the ansatz

$$\delta a(t) = A^- \, e^{-i\Omega t} + A^+ \, e^{+i\Omega t} \tag{S13}$$

$$\delta a^*(t) = (A^+)^* \, e^{-i\Omega t} + (A^-)^* \, e^{+i\Omega t} \tag{S14}$$

$$\delta x(t) = X \, e^{-i\Omega t} + X^* \, e^{+i\Omega t}. \tag{S15}$$

If sorted by rotation terms, this yields six equations. However, the probe field's transmission at frequency $\omega_l + \Omega$ only depends on A^-. In this sense, the three equations of interest are:

$$\left(-i(\bar{\Delta} + \Omega) + \kappa/2\right) A^- = -iG\bar{a}X + \sqrt{\eta_{\rm c}\kappa} s_p \tag{S16}$$

$$\left(+i(\bar{\Delta} - \Omega) + \kappa/2\right) (A^+)^* = +iG\bar{a}X \tag{S17}$$

$$m_{\rm eff} \left(\Omega_{\rm m}^2 - \Omega^2 - i\Gamma_{\rm m}\Omega\right) X = -\hbar G\bar{a} \left(A^- + (A^+)^*\right). \tag{S18}$$

The solution of interest is

$$A^- = \frac{1 + if(\Omega)}{-i(\bar{\Delta} + \Omega) + \kappa/2 + 2\bar{\Delta} f(\Omega)} \sqrt{\eta_{\rm c}\kappa} s_p, \tag{S19}$$

with

$$f(\Omega) = \hbar G^2 \bar{a}^2 \, \frac{\chi(\Omega)}{i(\bar{\Delta} - \Omega) + \kappa/2} \tag{S20}$$

and the mechanical susceptibility

$$\chi(\Omega) = \frac{1}{m_{\rm eff}} \frac{1}{\Omega_{\rm m}^2 - \Omega^2 - i\Omega\Gamma_{\rm m}}. \tag{S21}$$

1.3.2 Spectrum of the transmitted light

Using the input-output relation (*10*), one obtains:

$$s_{\rm out}(t) = s_{\rm in}(t) - \sqrt{\eta_{\rm c}\kappa} \, a(t) \tag{S22}$$

$$= (s_{\rm c} - \sqrt{\eta_{\rm c}\kappa}\bar{a}) e^{-i\omega_c t} + (s_{\rm p} - \sqrt{\eta_{\rm c}\kappa} A^-) e^{-i(\omega_c + \Omega)t} - \sqrt{\eta_{\rm c}\kappa} A^+ e^{-i(\omega_c - \Omega)t}. \tag{S23}$$

The transmission of the probe field is then given by:

$$t_p = \frac{s_{\rm p} - \sqrt{\eta_{\rm c}\kappa} A^-}{s_{\rm p}} \tag{S24}$$

$$= 1 - \frac{1 + if(\Omega)}{-i(\bar{\Delta} + \Omega) + \kappa/2 + 2\bar{\Delta} f(\Omega)} \eta_{\rm c}\kappa. \tag{S25}$$

Here, we refer to the probe transmission in the general sense of the ratio of the probe field returned from the system divided by the sent probe field. Depending on the cavity geometry, the returned probe field corresponds to the probe field reflected from the input coupler (Fabry-Perot-type resonator) or the probe field transmitted through the fiber taper used for evanescent coupling of an ideal WGM resonator. In general, the "returned probe field" refers to the probe field in the spatial mode which is fed by the probe if it is tuned off-resonance from the cavity mode.

1.3.3 Resolved-sideband limit

In the resolved sideband regime (*11*) ($\kappa \ll \Omega_m$), the lower sideband, far off-resonance, can be neglected:

$$A^+ \approx 0.$$

In addition, we can linearize the mechanical susceptibility for small values of the parameter $\Delta' = \Omega - \Omega_m$:

$$m_{\text{eff}}(\Omega_m^2 - \Omega^2 - i\Gamma_m\Omega) \approx \Omega_m(2\Delta' - i\Gamma_m).$$

The system (S16)(S17)(S18) then simplifies to:

$$\left(-i(\bar{\Delta} + \Omega_m + \Delta') + \kappa/2\right) A^- = -iG\bar{a}X + \sqrt{\eta_c\kappa}s_p \tag{S26}$$

$$\Omega_m(2\Delta' - i\Gamma_m)X = -\hbar G\bar{a}A^-. \tag{S27}$$

The solution for the intracavity field is:

$$A^- = \frac{\sqrt{\eta_c\kappa}s_p}{-i(\bar{\Delta} + \Omega_m + \Delta') + \kappa/2 + \frac{\Omega_c^2/4}{(-i\Delta' + \Gamma_m/2)}}, \tag{S28}$$

where we have introduced the coupling between the mechanical and optical resonators:

$$\Omega_c = 2G\bar{a}x_{\text{zpf}},$$

with

$$x_{\text{zpf}} = \sqrt{\frac{\hbar}{2m_{\text{eff}}\Omega_m}},$$

the zero point fluctuations amplitude of the mechanical oscillator. This formula becomes

$$A^- = \frac{\sqrt{\eta_c\kappa}s_p}{-i\Delta' + \kappa/2 + \frac{\Omega_c^2/4}{(-i\Delta' + \Gamma_m/2)}} \tag{S29}$$

for a control laser tuned to the lower motional sideband ($\bar{\Delta} = -\Omega_m$).

The achievable coupling rate is only limited by the appearence of radiation pressure bistability for high control power. In the resolved sideband regime, the upper limit for the coupling rate is found to be $\Omega_c < \Omega_m$ (*12, 13*).

We will now briefly review the formalism used to describe EIT in the context of atomic physics to emphasize the analogy between the two phenomena.

2 Comparison with EIT in Atomic Physics

For atomic EIT, we essentially revisit the well-known derivation developed in (*14*), which will assist in identifying the close resemblance between OMIT and atomic EIT. We consider a Λ-system, consisting of a common upper state $|3\rangle$ and two (long-lived) ground states $|1\rangle$ and $|2\rangle$. In a semiclassical treatment (*15*), the relevant Hamiltonian is given by:

$$\hat{H} = \sum_j \hbar\omega_j \hat{\sigma}_{jj} - \frac{\hbar}{2}\mu_{23}(\hat{\sigma}_{23} + \hat{\sigma}_{32})E(t) - \frac{\hbar}{2}\mu_{13}(\hat{\sigma}_{13} + \hat{\sigma}_{31})E(t), \tag{S30}$$

where $\hat{\sigma}_{ij} = |i\rangle\langle j|$ are the atomic projection operators and $i, j \in \{1, 2, 3\}$ label the three involved levels. ω_{ij} and μ_{ij} are the frequency and dipole moment along the electric field's direction for the $i \to j$ transition. The (classical) field contains the two (coupling and probe) components

$$E(t) = \frac{1}{2}\mathcal{E}_{\mathrm{c}}\left(e^{-i\omega_{\mathrm{c}}t} + e^{+i\omega_{\mathrm{c}}t}\right) + \frac{1}{2}\mathcal{E}_{\mathrm{p}}\left(e^{-i\omega_{\mathrm{p}}t} + e^{+i\omega_{\mathrm{p}}t}\right), \tag{S31}$$

where ω_{c} is tuned close to ω_{32} and ω_{p} close to ω_{31}. The usual Heisenberg equations of motion for the operators $\hat{\sigma}_{ij}$ can then be derived using $i\hbar\frac{d\hat{\sigma}_{ij}}{dt} = [\hat{\sigma}_{ij}, \hat{H}]$. Retaining only near-resonant terms, the equations of motion can be written as

$$\dot{\hat{\sigma}}_{12} = -i\omega_{21}\hat{\sigma}_{12} + \frac{i}{2\hbar}\mu_{23}\mathcal{E}_{\mathrm{c}}\hat{\sigma}_{13}e^{+i\omega_{\mathrm{c}}t} - \frac{i}{2\hbar}\mu_{13}\mathcal{E}_{\mathrm{p}}\hat{\sigma}_{32}e^{-i\omega_{\mathrm{p}}t} \tag{S32}$$

$$\dot{\hat{\sigma}}_{23} = -i\omega_{32}\hat{\sigma}_{23} + \frac{i}{2\hbar}\mu_{23}\mathcal{E}_{\mathrm{c}}(\hat{\sigma}_{22} - \hat{\sigma}_{33})e^{-i\omega_{\mathrm{c}}t} + \frac{i}{2\hbar}\mu_{13}\mathcal{E}_{\mathrm{p}}\hat{\sigma}_{21}e^{-i\omega_{\mathrm{p}}t} \tag{S33}$$

$$\dot{\hat{\sigma}}_{13} = -i\omega_{31}\hat{\sigma}_{13} + \frac{i}{2\hbar}\mu_{23}\mathcal{E}_{\mathrm{c}}\hat{\sigma}_{12}e^{-i\omega_{\mathrm{c}}t} + \frac{i}{2\hbar}\mu_{13}\mathcal{E}_{\mathrm{p}}(\hat{\sigma}_{11} - \hat{\sigma}_{33})e^{-i\omega_{\mathrm{p}}t}. \tag{S34}$$

We emphasize that the rotating wave approximation (neglecting all non-resonant contributions) is analogous to the resolved sideband approximation presented in the context of OMIT. For a sufficiently weak probe field, the expectation values $\sigma_{ij} = \langle\hat{\sigma}_{ij}\rangle$ can further be approximated to obey $\sigma_{11} \approx 1$ and $\sigma_{22} \approx \sigma_{33} \approx \sigma_{23} \approx \sigma_{32} \approx 0$ at all times, while the remaining expectation values obey

$$\dot{\sigma}_{12} = -i(\omega_{21} - i\gamma_{12}/2)\sigma_{12} + \frac{i}{2\hbar}\mu_{23}\mathcal{E}_{\mathrm{c}}\sigma_{13}e^{+i\omega_{\mathrm{c}}t} \tag{S35}$$

$$\dot{\sigma}_{13} = -i(\omega_{31} - i\gamma_{13}/2)\sigma_{13} + \frac{i}{2\hbar}\mu_{23}\mathcal{E}_{\mathrm{c}}\sigma_{12}e^{-i\omega_{\mathrm{c}}t} + \frac{i}{2\hbar}\mu_{13}\mathcal{E}_{\mathrm{p}}e^{-i\omega_{\mathrm{p}}t}, \tag{S36}$$

where damping rates γ_{12} and γ_{13} were introduced classically. Changing to a rotating frame $\sigma_{12} = S_{12}e^{-i\Omega t}$, $\sigma_{13} = S_{13}e^{-i(\omega_{\mathrm{c}}+\Omega)t}$ and $\mathcal{E}_{\mathrm{p}}e^{-i\omega_{\mathrm{p}}t} = \mathcal{E}_{\mathrm{p}}e^{-i(\omega_{\mathrm{c}}+\Omega)t}$ with $\omega_{\mathrm{p}} = \omega_{\mathrm{c}} + \Omega$, we obtain in the steady state

$$(-i(\Omega - \omega_{21}) + \gamma_{12}/2)S_{12} = +\frac{i}{2\hbar}\mu_{23}\mathcal{E}_{\mathrm{c}}S_{13} \tag{S37}$$

$$(-i(\Omega + \omega_c - \omega_{31}) + \gamma_{13}/2)S_{13} = +\frac{i}{2\hbar}\mu_{23}\mathcal{E}_{\mathrm{c}}S_{12} + \frac{i}{2\hbar}\mu_{13}\mathcal{E}_{\mathrm{p}}, \tag{S38}$$

which is solved by

$$S_{13} = \frac{i\mu_{13}\mathcal{E}_{\rm p}/2\hbar}{-i(\Delta' + \omega_c - \omega_{32}) + \gamma_{13}/2 + \frac{\Omega_{\rm c}^2/4}{-i\Delta' + \gamma_{12}/2}}, \tag{S39}$$

where we now abbreviate $\Delta' = \Omega - \omega_{21} = \omega_{\rm p} - \omega_{31}$. We note as an aside that an equivalent calculation can be made for the atomic coherences ρ_{12} and ρ_{13}, yielding essentially the same result (*15*). This result simplifies for a control field on resonance ($\omega_c = \omega_{32}$):

$$S_{13} = \frac{i\mu_{13}\mathcal{E}_{\rm p}/2\hbar}{-i\Delta' + \gamma_{13}/2 + \frac{\Omega_{\rm c}^2/4}{-i\Delta' + \gamma_{12}/2}}. \tag{S40}$$

The induced dipole moment along the electric field's direction is given by $p = \mu_{13}(\sigma_{13} + \sigma_{31})$ so that the polarizibility α of the medium at the probe frequency in the presence of the coupling beam can be directly given by

$$\alpha = \frac{\mu_{13}S_{13}}{\mathcal{E}_{\rm p}/2} = \frac{i\mu_{13}^2/\hbar}{(-i\Delta' + \gamma_{13}/2) + \frac{\Omega_{\rm c}^2/4}{(-i\Delta' + \gamma_{12}/2)}}. \tag{S41}$$

Evidently one can identify a formal correspondence between the physical entities involved in EIT in atomic physics and OMIT in optomechanical systems. Equations (S37)(S38)(S39)(S40) are perfectly equivalent to (S26)(S27)(S28)(S29) by applying the identifications listed in the following table.

Table S1: Comparison of physical entities relevant for EIT and OMIT.

EIT	OMIT
projection operator σ_{13} (coherence ρ_{13})	intracavity field amplitude A^-
projection operator σ_{12} (coherence ρ_{12})	mechanical displacement amplitude X
energy difference between ground states $\hbar\omega_{21}$	phonon energy $\hbar\Omega_{\rm m}$
Rabi frequency $\mu_{23}\mathcal{E}_{\rm c}/\hbar$	optomechanical coupling rate $2G\bar{a}x_{\rm zpf}$

3 Simplifications in the weak coupling case

In addition to the resolved sideband approximation, we will consider the case where the optomechanical coupling is weak compared to the optical losses ($\Omega_c, \Gamma_m \ll \kappa$). We also assume that the control laser is tuned on the lower sideband ($\bar{\Delta} = -\Omega_m$). Then, the EIT feature is very

well described by a Lorentzian transmission window in the optical transmission spectrum. This can be seen by applying the simplification $-i\Delta' + \kappa/2 \approx \kappa/2$ in equation (S29):

$$A^- \approx \frac{4\sqrt{\eta_c \kappa}(-i\Delta' + \Gamma_m/2)}{2\kappa(\Gamma_m/2 - i\Delta') + \Omega_c^2} s_p. \tag{S42}$$

Plugging the corresponding value of A^- in (S24), one obtains:

$$t_p = 1 - 2\eta_c + \frac{2\eta_c \Omega_c^2}{\Omega_c^2 + \Gamma_m \kappa - 2i\Delta'\kappa}. \tag{S43}$$

In order to isolate the interesting physics of OMIT from the well-understood waveguide-cavity coupling effects, we introduce the normalized transmission:

$$t'_p = \frac{t_p - t_r}{1 - t_r}, \tag{S44}$$

where t_r is the residual on resonance transmission in the absence of a coupling laser:

$$t_r = t_p(\Delta' = 0, \Omega_c = 0) \tag{S45}$$

$$= 1 - 2\eta_c. \tag{S46}$$

The normalized transmission is then independant of η_c:

$$t'_p = \frac{\Omega_c^2}{\Omega_c^2 + \Gamma_m \kappa - 2i\Delta'\kappa}. \tag{S47}$$

This corresponds to the transmission in the case of critical coupling $\eta_c = 1/2$. The optomechanically induced transparency window is hence given by:

$$|t'_p|^2 = \frac{\Omega_c^4/\kappa^2}{\left(\Omega_c^2/\kappa + \Gamma_m\right)^2 + \left(2\Delta'\right)^2}. \tag{S48}$$

A Lorentzian of width

$$\Gamma_{\text{OMIT}} = \Gamma_m + \Omega_c^2/\kappa \tag{S49}$$

$$\tag{S50}$$

and peak value

$$|t'_p(\Delta' = 0)|^2 = \left(\frac{\Omega_c^2/\kappa}{\Gamma_m + \Omega_c^2/\kappa}\right)^2. \tag{S51}$$

These two quantities can be expressed very simply by introducing the cooperativity of the coupled systems $C = \Omega_c^2/(\Gamma_m \kappa)$ (*16*):

$$\Gamma_{\text{OMIT}} = \Gamma_m(1 + C) \tag{S52}$$

$$|t'_p(\Delta' = 0)|^2 = \left(\frac{C}{1 + C}\right)^2. \tag{S53}$$

4 Experimental setup

As shown in Figure S1, the experiment was carried out at cryogenic temperatures using a Helium-3 buffer gas cryostat. In addition to reducing the thermal Brownian motion of the mechanical oscillator this allows eliminating thermo-optical nonlinearities (*17*) which can impede driving the lower motional sideband with a strong control laser. The sample is mounted on a cryogenic head, which allows approaching a tapered fiber for near field evanescent coupling using piezoelectric positioners. While an external-cavity diode laser was used for initial characterization, a low-noise, continuous-wave Titanium Sapphire laser operating at a wavelength of $\lambda \approx 775\,\mathrm{nm}$ is employed for the actual OMIT experiments. The Ti:sapphire laser's linewidth is reduced below $30\,\mathrm{kHz}$ by stabilization to a temperature-controlled reference cavity using the Pound-Drever-Hall technique. This approach furthermore proved to provide sufficient mutual frequency stability of the cryogenic microresonator and the cavity-stabilized laser on the relevant scale of the cavity linewidth κ.

In order to detect the optical response of the optomechanical system with a high sensitivity, we use a homodyne detection scheme: The RF beat of the beam transmitted through the optomechanical system with a strong local oscillator is detected using fast balanced photodiodes.

5 Measurement using the phase modulation scheme

For technical reasons, the optical response was probed using a frequency modulation technique: the coupling laser is phase modulated using an EOM (Fig. S1) at frequency Ω, hence creating two sidebands at $\omega_l + \Omega$ and $\omega_l - \Omega$. In the resolved sideband regime, only the upper sideband, close to resonance interacts with the cavity, acting as a weak probe beam. The lower one and carrier are transmitted unchanged through the tapered fiber. However, one has to take them into account in order to understand quantitatively the obtained results. We will show here that the measured signal is linked to the transmission at the probe frequency through a direct relation.

The incident fields at the homodyne beamsplitter are a carrier and two sidebands of the local oscillator, and the carrier and two sidebands of the beam entering the cavity (Fig. S1). We note t_c, t_{us} and t_{ls} the complex transmission coefficient across the cavity for the carrier, upper sideband and lower sideband respectively. The phase of the local oscillator Φ is actively adjusted so that it matches the phase of the control beam emerging from the cavity.

At one exit of the beamsplitter the optical power is proportional to

$$\left| E_{\mathrm{cav}} e^{-i\omega_l t} \left(t_{\mathrm{c}} + i\frac{\beta}{2} e^{-i\Omega t} t_{\mathrm{us}} + i\frac{\beta}{2} e^{+\Omega t} t_{\mathrm{ls}} \right) + i E_{\mathrm{LO}} e^{-i\omega_l t} e^{i\Phi} \left(1 + i\frac{\beta}{2} e^{-i\Omega t} + i\frac{\beta}{2} e^{i\Omega t} \right) \right|^2, \tag{S54}$$

where β is the depth of the modulation induced by the EOM, E_{LO} and E_{cav} are the field amplitudes in the local oscillator and signal arms of the homodyne setup. The interesting terms are

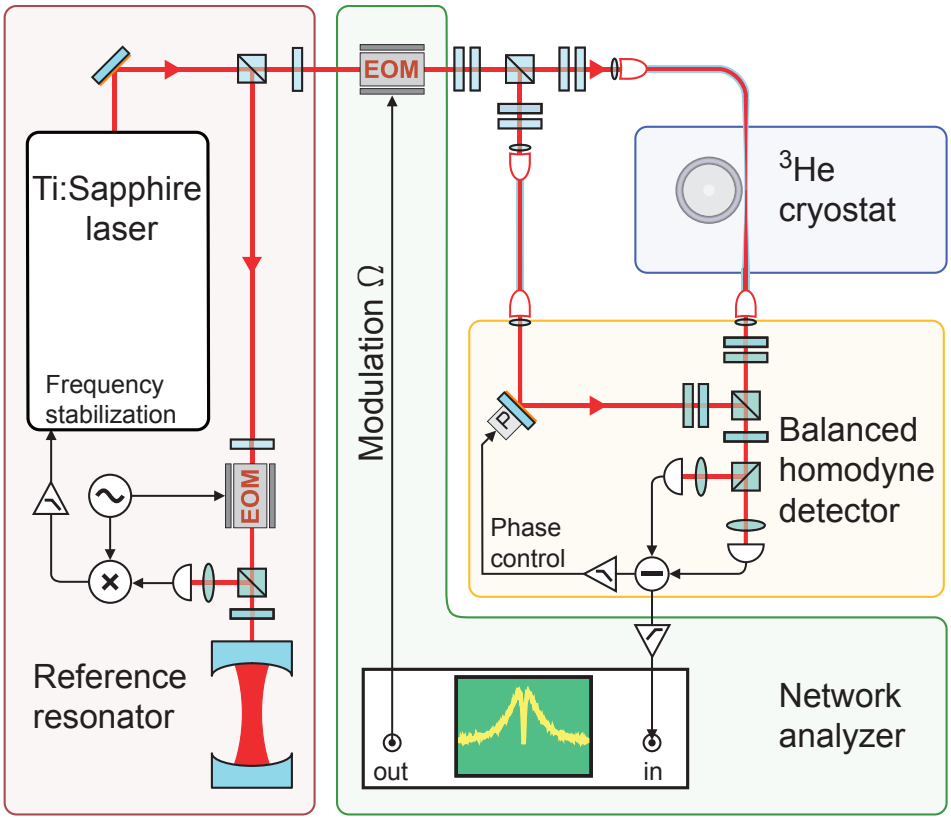

Figure S1: Experimental setup. An optomechanical system consisting of a toroid microresonator held at cryogenic temperatures in a Helium-3 buffer gas cryostat. The control and probe fields are derived from a single Ti:sapphire laser, which is stabilized to an external reference resonator using the Pound-Drever-Hall technique. While the laser carrier is used as control beam, the probe beam is created by a phase modulator driven at the radio frequency Ω. This optical input is split into two arms, one of which is sent to a tapered fiber in the cryostat, which allows optical coupling to the whispering gallery mode of the toroidal resonator as shown in micrograph with a $\sim 60\,\mu$m-diameter toroid. The other arm serves as the local oscillator in a balanced homodyne receiver used to analyze the light returned from the optomechanical system. While the receiver's DC component is used to lock the phase of the local oscillator, the AC component is analyzed using a network analyzer.

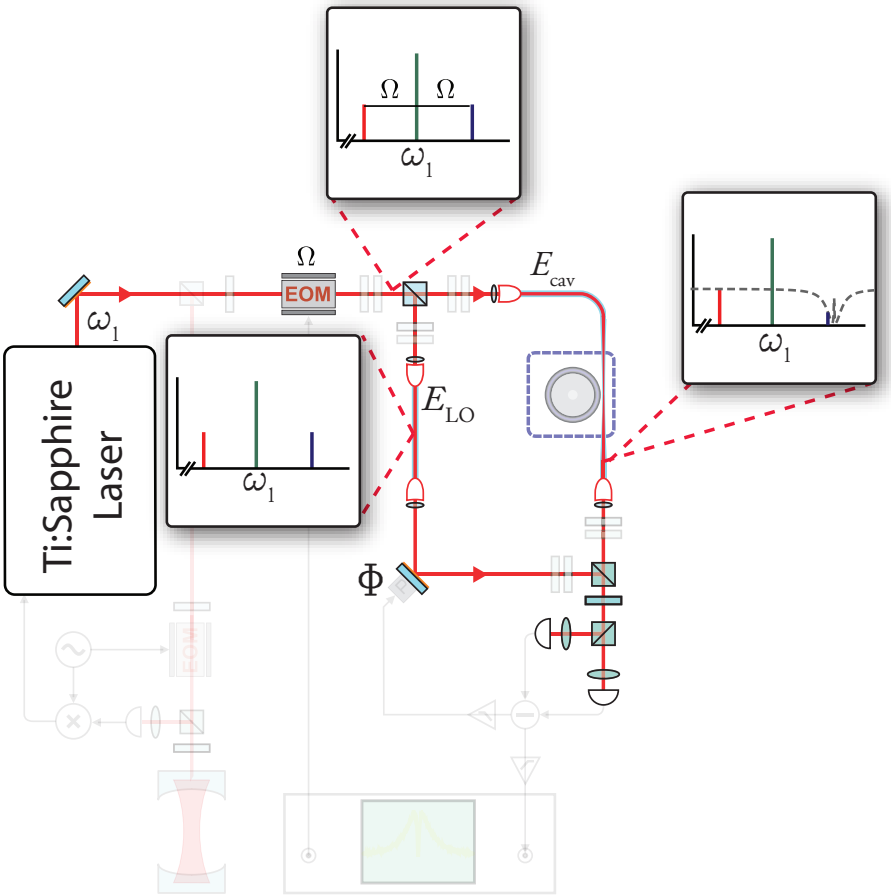

Figure S2: The optical setup as described in Figure S1. The laser is phase modulated, creating two sidebands at frequency $\omega_l \pm \Omega$. The local oscillator field is transmitted unchanged whereas the field in the signal arm is affected by the cavity transmission. In the RSB regime, lower sideband and carrier, off resonant by approximately $2\Omega_m$ and Ω_m are not affected.

the modulated cross-terms, they are given by

$$
\begin{aligned}
&2\,\mathrm{Re}\left[\left(E_{\mathrm{cav}}e^{-i\omega_l t}t_{\mathrm{c}}\right)\cdot\left(iE_{\mathrm{LO}}e^{-i\omega_l t}e^{i\Phi}\left(i\frac{\beta}{2}e^{-i\Omega t}+i\frac{\beta}{2}e^{+i\Omega t}\right)\right)^*\right.\\
&\qquad\left.+\left(E_{\mathrm{cav}}e^{-i\omega_l t}\left(i\frac{\beta}{2}e^{-i\Omega t}t_{\mathrm{us}}+i\frac{\beta}{2}e^{+i\Omega t}t_{\mathrm{ls}}\right)\right)\cdot\left(iE_{\mathrm{LO}}e^{-i\omega_l t}e^{i\Phi}\right)^*\right] \qquad \text{(S55)}\\
&=\beta E_{\mathrm{cav}}E_{\mathrm{LO}}\,\mathrm{Re}\left[t_{\mathrm{c}}\cdot\left(-e^{-i\Phi}\left(e^{+i\Omega t}+e^{-i\Omega t}\right)\right)+\left(e^{-i\Omega t}t_{\mathrm{us}}+e^{+i\Omega t}t_{\mathrm{ls}}\right)\cdot\left(e^{-i\Phi}\right)\right]\\
&=\beta E_{\mathrm{cav}}E_{\mathrm{LO}}\,\mathrm{Re}\left[\left(e^{-i\Phi}\right)\left(-t_{\mathrm{c}}2\cos(\Omega t)+\left(e^{-i\Omega t}t_{\mathrm{us}}+e^{+i\Omega t}t_{\mathrm{ls}}\right)\right)\right]
\end{aligned}
$$

Now writing real and imaginary parts of the used functions as

$$e^{-i\Phi}\equiv\Phi'+i\Phi'' \qquad \text{(S56)}$$

$$t_{\mathrm{c}}\equiv t_c'+it_c'' \qquad \text{(S57)}$$

$$t_{\mathrm{us}}\equiv t_{\mathrm{us}}'+it_{\mathrm{us}}'' \qquad \text{(S58)}$$

$$t_{\mathrm{ls}}\equiv t_{\mathrm{ls}}'+it_{\mathrm{ls}}'' \qquad \text{(S59)}$$

we get (omitting the prefactor $\beta E_{\mathrm{cav}}E_{\mathrm{LO}}$)

$$\cos(\Omega t)\underbrace{\left(-2\Phi' t_{\mathrm{c}}'+2\Phi'' t_c''+(t_{\mathrm{us}}'+t_{\mathrm{ls}}')\Phi'-(t_{\mathrm{us}}''+t_{\mathrm{ls}}'')\Phi''\right)}_{A}+\sin(\Omega t)\underbrace{\left(-(t_{\mathrm{us}}''-t_{\mathrm{ls}}'')\Phi'-(t_{\mathrm{us}}'-t_{\mathrm{ls}}')\Phi''\right)}_{B} \qquad \text{(S60)}$$

A and B represent the in-phase and quadrature response of the system to the input modulation. In the resolved sideband regime, only the upper sideband is affected by the cavity. In this case $\Phi'=t_c'=t_{\mathrm{ls}}'=1$ and $\Phi''=t_{\mathrm{c}}''=t_{\mathrm{ls}}''=0$. Moreover, the upper sideband, close to resonance, is probing the OMIT signal $t_{\mathrm{us}}=t_p$. The quadratures measured by the network analyzer are then:

$$A\approx 1-t_{\mathrm{us}}'=1-\mathrm{Re}(t_p) \qquad \text{(S61)}$$

$$B\approx -t_{\mathrm{us}}''=-\,\mathrm{Im}(t_p). \qquad \text{(S62)}$$

The complex amplitude response $t_{\mathrm{hom}}=A+iB$ as measured on the network analyzer is hence given in good approximation by:

$$t_{\mathrm{hom}}\approx 1-t_p. \qquad \text{(S63)}$$

The normalized response t_{hom}' is directly related to the normalized transmission $t_p{}'$:

$$t_{\mathrm{hom}}'=\frac{t_{\mathrm{hom}}}{1-t_r} \qquad \text{(S64)}$$

$$=1-t_p{}'. \qquad \text{(S65)}$$

In particular, if we consider the form (S47) for the probe beam transmission, the measured signal is then given by:

$$t_{\mathrm{hom}}'=\frac{\Gamma_m\kappa-2i\Delta'\kappa}{\Omega_c^2+\Gamma_m\kappa-2i\Delta'\kappa}. \qquad \text{(S66)}$$

We can easily calculate the normalized transmitted power:

$$|t'_{\mathrm{hom}}|^2 = 1 - \frac{\Omega_c^2/\kappa\,(\Omega_c^2/\kappa + 2\Gamma_m)}{(\Gamma_m + \Omega_c^2/\kappa)^2 + (2\Delta')^2} \tag{S67}$$

The measured signal is hence an inverted lorentzian peak with width Γ_{OMIT} (same width as $|t_p|^2$). The minimum value of the dip $|t'_{\mathrm{hom}}(\Delta' = 0)|^2$ can be linked very easily to the maximum value of the transmission window $|t'_p(\Delta' = 0)|^2$ by remarking that for $\Delta' = 0$ the transmission coefficients t_p and t_{hom} are real. The relation (S63) gives then:

$$|t'_{\mathrm{hom}}(\Delta' = 0)|^2 = \left(1 - \sqrt{|t'_p(\Delta' = 0)|^2}\right)^2 \tag{S68}$$

6 Group delay

EIT is the underlying phenomenon allowing for slowing down of light pulses. Indeed, the sharp transparency window in the medium is accompanied by a very abrupt change of its refractive index leading to slow group velocities (see (*14*) for a detailed analysis of the phenomenon). In the case of a single optically active element like an optomechanical device, the rapid phase dispersion $\phi(\omega) = \arg(t_p(\omega))$ leads to a 'group delay' τ_g given by:

$$\tau_g = -\frac{d\phi}{d\omega}. \tag{S69}$$

A full calculation based on the expression (S29) shows that the group delay diverges for small values of the transparency. However, in the regime $C \gtrsim 1$, where the medium is not completely opaque, a simple calculation based on expression (S47) is perfectly valid:

$$\phi(\Delta') = \arctan\left(\frac{2\Delta'\kappa}{\Omega_c + \Gamma_m\kappa}\right). \tag{S70}$$

This gives for the middle of the transparency window ($\Delta' = 0$):

$$\tau_g(\Delta' = 0) = \frac{2\kappa}{\Omega_c^2 + \Gamma_m\kappa} \tag{S71}$$

$$= \frac{1}{\Gamma_m}\left(\frac{2}{C+1}\right) \tag{S72}$$

$$= \frac{2}{\Gamma_{\mathrm{OMIT}}}. \tag{S73}$$

7 Theoretical treatment of a splitted resonance

Our ring cavity can support two counterpropagating modes which are frequency degenerate for symmetry reasons. The propagation direction of the light in the coupling region therefore

determines which mode is excited. However, as noted in early work on microspheres (*18*), and in theoretical as well as experimental work (*19–21*), due to residual scattering of light at the surface or in the bulk glass, the counterpropagating mode can also be significantly populated.

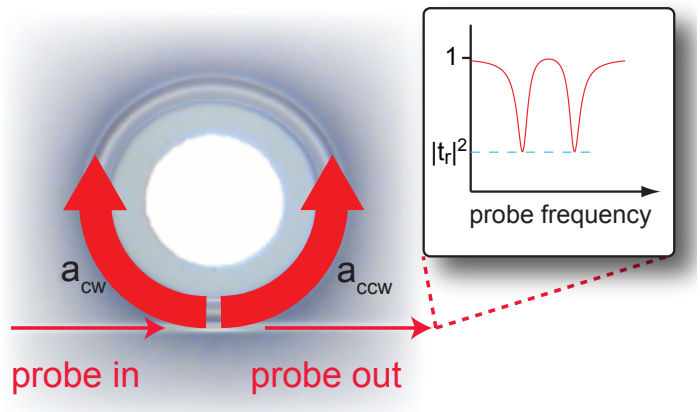

Figure S3: In a ring cavity, two frequency-degenerate counterpropagating modes $a_{\rm cw}$ and $a_{\rm ccw}$ coexist. Only $a_{\rm ccw}$ is coupled to the waveguide, however, because of scattering into the counter-propagating mode, $a_{\rm cw}$ and $a_{\rm ccw}$ are coupled at a rate γ. For $\gamma \gg \kappa$, the frequency degeneracy of the new eigenmodes $a_+ = (a_{\rm ccw} + a_{\rm cw})/\sqrt{2}$ and $a_- = (a_{\rm ccw} - a_{\rm cw})/\sqrt{2}$ is lifted and the optical resonance splits up.

The essence of the phenomenon can be described by a coupled mode theory: if the two modes $a_{\rm cw}$ and $a_{\rm ccw}$ (see figure S3) are coupled by a coupling rate γ, the equations of motion become:

$$\dot{a}_{\rm ccw}(t) = (i(\Delta - Gx) - \kappa/2)a_{\rm ccw}(t) + i\frac{\gamma}{2}a_{\rm cw}(t) + \sqrt{\eta_{\rm c}\kappa}s_{\rm in}(t) \tag{S74}$$

$$\dot{a}_{\rm cw}(t) = (i(\Delta - Gx) - \kappa/2)a_{\rm cw}(t) + i\frac{\gamma}{2}a_{\rm ccw}(t), \tag{S75}$$

and the radiation pressure force is now described by the equation:

$$\frac{d^2}{dt^2}x(t) + \Gamma_m\frac{d}{dt}x(t) + \Omega_m^2 x(t) + = -\frac{\hbar G}{m_{\rm eff}}(|a_{\rm ccw}|^2 + |a_{\rm cw}|^2). \tag{S76}$$

Indeed, because of the symmetry of the radial breathing mode, the oscillator is not driven by the cross term $2{\rm Re}(a_{\rm ccw}^* a_{\rm cw})$. We can then easily rewrite these equations in terms of the two

stationary modes $a_+ = (a_{\rm ccw} + a_{\rm cw})/\sqrt{2}$ and $a_- = (a_{\rm ccw} - a_{\rm cw})/\sqrt{2}$:

$$\dot{a}_+(t) = \left[i(\Delta - Gx + \frac{\gamma}{2}) - \kappa/2\right] a_+(t) + \sqrt{\frac{\eta_{\rm c}\kappa}{2}} s_{\rm in}(t) \tag{S77}$$

$$\dot{a}_-(t) = \left[i(\Delta - Gx - \frac{\gamma}{2}) - \kappa/2\right] a_-(t) + \sqrt{\frac{\eta_{\rm c}\kappa}{2}} s_{\rm in}(t) \tag{S78}$$

$$\frac{d^2}{dt^2}x(t) + \Gamma_m \frac{d}{dt}x(t) + \Omega_m^2 x(t) = -\frac{\hbar G}{m_{\rm eff}}(|a_+|^2 + |a_-|^2). \tag{S79}$$

The two stationary modes are the eigenmodes of the evolution and the degeneracy is lifted by the coupling rate γ.

In the limit $\gamma \gg \kappa$, the two modes are well resolved and only one of them (a_-) has to be considered since a_+ is non resonant and hence not populated (also, the experimental conditions have to be chosen in order to avoid a mechanical sideband coinciding with the resonance frequency of a_+). In this limit, the optomechanical system reads:

$$\dot{a}_-(t) = \left[i(\Delta - Gx - \frac{\gamma}{2}) - \kappa/2\right] a_-(t) + \sqrt{\frac{\eta_{\rm c}\kappa}{2}} s_{\rm in}(t) \tag{S80}$$

$$\frac{d^2}{dt^2}x(t) + \Gamma_m \frac{d}{dt}x(t) + \Omega_m^2 x(t) = -\frac{\hbar G}{m_{\rm eff}}|a_-|^2. \tag{S81}$$

This system is equivalent to (S11) and (S12) after formally replacing the coupling parameter $\eta_{\rm c}$ by $\tilde{\eta}_{\rm c} \equiv \eta_{\rm c}/2$, and Δ by $\tilde{\Delta} \equiv \Delta - \gamma/2$. This equivalence also holds for the transmitted fields

$$\begin{aligned} s_{\rm out}(t) &= s_{\rm in}(t) - \sqrt{\eta_{\rm c}\kappa}\, a_{\rm ccw}(t) = s_{\rm in}(t) - \sqrt{\eta_{\rm c}\kappa/2}\ (a_-(t) + a_+(t)) \\ &\approx s_{\rm in}(t) - \sqrt{\eta_{\rm c}\kappa/2}\, a_-(t) \end{aligned} \tag{S82}$$

as illustrated in figure S3. The reduced effective coupling parameter arises from the scattering of half of the intracavity power to the uncoupled mode. Note that in this case part of the intracavity light can be dissipated to a reflected field

$$\begin{aligned} s_{\rm ref}(t) &= -\sqrt{\eta_{\rm c}\kappa}\, a_{\rm cw}(t) = -\sqrt{\eta_{\rm c}\kappa/2}\ (-a_-(t) + a_+(t)) \\ &\approx \sqrt{\eta_{\rm c}\kappa/2}\, a_-(t), \end{aligned} \tag{S83}$$

which can consitute another channel of optical dissipation. In the regime we consider, an optical beam resonant with the a_- cavity eigenmode dissipates a fraction of $2\eta_{\rm c}(1-\eta_{\rm c})$ of the launched power due to the intrinsic losses of the cavity, a fraction of $(1-\eta_{\rm c})^2$ is transmitted and a fraction of $\eta_{\rm c}^2$ is reflected.

With our present settings, we measured a residual transmission of $|t_r|^2 \approx 0.5$, we can hence infer the effective coupling parameter $\tilde{\eta}_{\rm c}$ by solving

$$|t_r|^2 = 1/2 = (1 - 2\tilde{\eta}_{\rm c})^2, \tag{S84}$$

leading to

$$\tilde{\eta_{\mathrm{c}}} = \frac{2-\sqrt{2}}{4} \approx 0.15. \tag{S85}$$

The intracavity power is hence smaller than the one calculated in the "standard" situation $\eta_{\mathrm{c}} = 1/2$ and $\gamma = 0$. In the calculation of the coupling rate Ω_{c}, we took this factor into account; an additional reduction factor of 1.9 had to be introduced to account for taper losses in this experiment.

8 Relation of OMIT to coherent mixing of mechanical excitations

Due to a significant overlap in the employed terminology, we would like to briefly explain the main differences between OMIT and the recently reported coherent mixing of mechanical excitations (*22*).

The systems used to demonstrate coherent mixing of mechanical excitations feature a pair of mechanical oscillators, coupled by a coupling rate γ (denoted as κ in the original manuscript). The displacement of one oscillator can be optically read out using a cavity, it is therefore referred to as "bright" mode (displacement x_b). The other mechanical mode does not interact with light and is therefore designated as "dark" mode (displacement x_d). The (mechanical) dynamics of the two coupled mechanical modes can be described by the Hamiltonian

$$\mathcal{H}_m = \frac{p_b^2}{2m_b} + \frac{1}{2}m_b\Omega_{mb}^2 x_b^2 + \frac{p_d^2}{2m_d} + \frac{1}{2}m_d\Omega_{md}^2 x_d^2 + \gamma x_b x_d, \tag{S86}$$

where p_b (p_d), Ω_b (Ω_d) and m_b (m_d) are the momentum, mechanical frequency, and effective mass of the bright (dark) mode.

Such coupled mechanical systems have been interpreted as a mechanical analog to EIT (*23*), as for sufficiently close mechanical resonance frequencies Ω_{mb} and Ω_{md}, a cancellation of the mechanical response to an external force at intermediate Fourier frequencies can occur. This cancellation can be interpreted as a mechanical 'transparency', arising from destructive interference of mechanical excitation pathways. Importantly, however, here the interference occurs exclusively in the mechanical domain.

In ref. (*22*) such a mechanical transparency is reported for two different mechanical oscillator systems. In both cases, the mechanical response of the bright mode to the thermal Langevin force is read out using the optical cavity transducer. At the same time, it is demonstrated that the cancellation of a mechanical response can be induced also in systems in which Ω_{mb} and Ω_{md} are originally too different for the interference to be observed, by tuning the resonance frequency Ω_{mb} of the bright mode using the optical spring effect in the cavity.

However, this mechanical interference and the one responsible for OMIT are very different in their nature. Evidently, OMIT is based on an optical interference effect. A second mechanical mode is therefore not necessary to implement the scheme. In OMIT, the control beam couples the optical probe field to a mechanical mode, and thus generates multiple excitation pathways for an intracavity probe field, as described in (*1–3*). As an important consequence OMIT provides a direct possibility to control the transmission of an optical probe beam.

In this context it is important to note that the term "cavity transmission" is used in a different way in ref. (*22*) and this work: In ref. (*22*), the "cavity transmission spectrum" refers to the RF/microwave-spectrum of the power fluctuations of the light emerging from the cavity, as it is induced by the thermally driven motion of the mechanical bright mode. In our manuscript, we refer to the transmission of the probe field as the ratio of the probe field amplitude returned from the cavity divided by the sent probe field amplitude, directly providing the required transfer function for light slowing and storage protocols (*24, 25*).

9 Table of symbols

symbol	meaning	definition
ω_l	laser frequency	
ω_c	cavity resonance frequency	
ω_p	probe frequency	
$\bar{\Delta}$	detuning of the control field	$\bar{\Delta} = \Delta - G\bar{x}$
κ	optical linewidth (FWHM)	
κ_0	intrinsic loss rate	
κ_{ex}	coupling rate to the waveguide	
η_{c}	coupling parameter	$\eta_{\mathrm{c}} = \kappa_{\mathrm{ex}}/(\kappa_0 + \kappa_{\mathrm{ex}})$
$\bar{a}$	mean intracavity mode amplitude	
$\bar{s}_{\mathrm{in}}$	mean drive amplitude	
G	optomechanical coupling	$d\omega_{\mathrm{c}}'/dx$
Ω_m	mechanical resonance frequency	
Γ_m	mechanical damping rate	
m_{eff}	effective mass	
$\bar{x}$	equilibrium displacement	
Δ'	detuning of the probe from the center of the OMIT feature	$\Delta' = \omega_p - \omega_l - \Omega_m$
x_{zpf}	zero-point fluctuations	$x_{\mathrm{zpf}} = \sqrt{\hbar/\left(2m_{\mathrm{eff}}\omega_m\right)}$
Ω_c	optomechanical coupling rate	$\Omega_c = 2G\bar{a}x_{\mathrm{zpf}}$
C	cooperativity	$C = \Omega_c^2/(\Gamma_m\kappa)$
$\chi(\Omega)$	mechanical susceptibility	$\chi(\Omega) = (m_{\mathrm{eff}}(\Omega_{\mathrm{m}}^2 - \Omega^2 - i\Gamma_{\mathrm{m}}\Omega))^{-1}$
t_p	complex amplitude transmission at probe frequency	
t_{hom}	complex transmission signal measured in the homodyne receiver	
β	Modulation depth	
t_{us}	complex transmission of the upper sideband	
t_{c}	complex transmission of the carrier	
t_{ls}	complex transmission of the lower sideband	
a_{cw}	amplitude of the clockwise propagating mode	
a_{ccw}	amplitude of the counterclockwise propagating mode	
γ	coupling between the two counter propagating modes	
a_+	symmetric stationary mode	$a_+ = \left(a_{\mathrm{cw}} + a_{\mathrm{ccw}}\right)/\sqrt{2}$
a_-	antisymmetric stationary mode	$a_- = \left(a_{\mathrm{cw}} - a_{\mathrm{ccw}}\right)/\sqrt{2}$

References and Notes

S1. A. Schliesser, Cavity optomechanics and optical frequency comb generation with silica whispering-gallery-mode microresonators, Ph.D. thesis, Ludwig-Maximilians-Universität München (2009). Http://edoc.ub.uni-muenchen.de/10940/, page 121ff.

S2. A. Schliesser, T. J. Kippenberg, *Advances in atomic, molecular and optical physics*, E. Arimondo, P. Berman, C. C. Lin, eds. (Elsevier Academic Press, 2010), vol. 58, chap. 5, pp. 207–323.

S3. G. S. Agarwal, S. Huang, *Physical Review A* **81**, 041803 (2010).

S4. C. K. Law, *Physical Review A* **51**, 2537 (1995).

S5. M. Cai, O. Painter, K. J. Vahala, *Physical Review Letters* **85**, 74 (2000).

S6. S. M. Spillane, T. J. Kippenberg, O. J. Painter, K. J. Vahala, *Physical Review Letters* **91**, 043902 (2003).

S7. C. Fabre, *et al.*, *Physical Review A* **49**, 1337 (1994).

S8. V. Giovannetti, D. Vitali, *Physical Review A* **63**, 023812 (2001).

S9. A. Dorsel, J. D. McCullen, P. Meystre, E. Vignes, H. Walther, *Physical Review Letters* **51**, 1550 (1983).

S10. C. W. Gardiner, P. Zoller, *Quantum Noise* (Springer, 2004).

S11. I. Wilson-Rae, N. Nooshi, W. Zwerger, T. J. Kippenberg, *Physical Review Letters* **99**, 093901 (2007).

S12. F. Marquardt, J. P. Chen, A. A. Clerk, S. M. Girvin, *Physical Review Letters* **99**, 093902 (2007).

S13. J. M. Dobrindt, I. Wilson-Rae, T. J. Kippenberg, *Physical Review Letters* **101**, 263602 (2008).

S14. P. W. Milonni, *Fast light, slow light and left-handed light* (Taylor and Francis, 2005).

S15. M. O. Scully, M. S. Zubairy, *Quantum Optics* (Cambridge University Press, 1997).

S16. H. J. Kimble, *Cavity Quantum Electrodynamics*, P. R. Berman, ed., Advances in Atomic, Molecular and Optical Physics (Academic Press, 1994).

S17. O. Arcizet, R. Rivière, A. Schliesser, G. Anetsberger, T. J. Kippenberg, *Physical Review A* **80**, 021803(R) (2009).

S18. D. S. Weiss, *et al.*, *Optics Letters* **20**, 1835 (1995).

S19. M. L. Gorodetsky, A. D. Pryamikov, V. S. Ilchenko, *Journal of the optical society of America B - Optical physics* **17**, 1051 (2000).

S20. T. J. Kippenberg, S. M. Spillane, K. J. Vahala, *Optics Letters* **27**, 1669 (2002).

S21. A. Mazzei, *et al.*, *Physical Review Letters* **99**, 173603 (2007).

S22. Q. Lin, *et al.*, *Nature Photonics* **4**, 236 (2010).

S23. C. L. Garrido Alzar, M. A. G. Martinez, P. Nussenzveig, *American Journal of Physics* **70**, 37 (2002).

S24. M. F. Yanik, S. Fan, *Physical Review Letters* **92**, 083901 (2004).

S25. D. E. Chang, A. H. Safavi-Naeini, M. Hafezi, O. Painter, *arXiv:1006.3829* (2010).