MODEL NAME : ***QBR10***
PCB NO : ***LA-8321P***
BOM P/N : ***4619H531L01***

Compal Confidential

Avenger MLK

rPGA Ivy Bridge + FCBGA PCH Panther Point-M + MXM Ⅲ x2

Rev: 1.0 (A00)

2012.02.16

@ : Nopop component
CONN@ : ME connector

DELL CONFIDENTIAL/PROPRIETARY

PROPRIETARY NOTE: THIS SHEET OF ENGINEERING DRAWING AND SPECIFICATIONS CONTAINS CONFIDENTIAL TRADE SECRET AND OTHER PROPRIETARY INFORMATION OF DELL. THIS DOCUMENT MAY NOT BE TRANSFERRED OR COPIED WITHOUT THE EXPRESS WRITTEN AUTHORIZATION OF DELL. IN ADDITION, NEITHER THIS SHEET NOR THE INFORMATION IT CONTAINS WAY BE USED BY OR DISCLOSED TO ANY THIRD PARTY WITHOUT DELL'S EXPRESS WRITTEN CONSENT.

Compal Electronics, Inc.		
Title: SCHEMATIC M/B LA-8321		
Size	Document Number: 4019H5	Rev: B
Date: Wednesday, August 01, 2012	Sheet 1 of 66	

Compal Confidential

Project Code : QBR10

File Name : LA-8321P

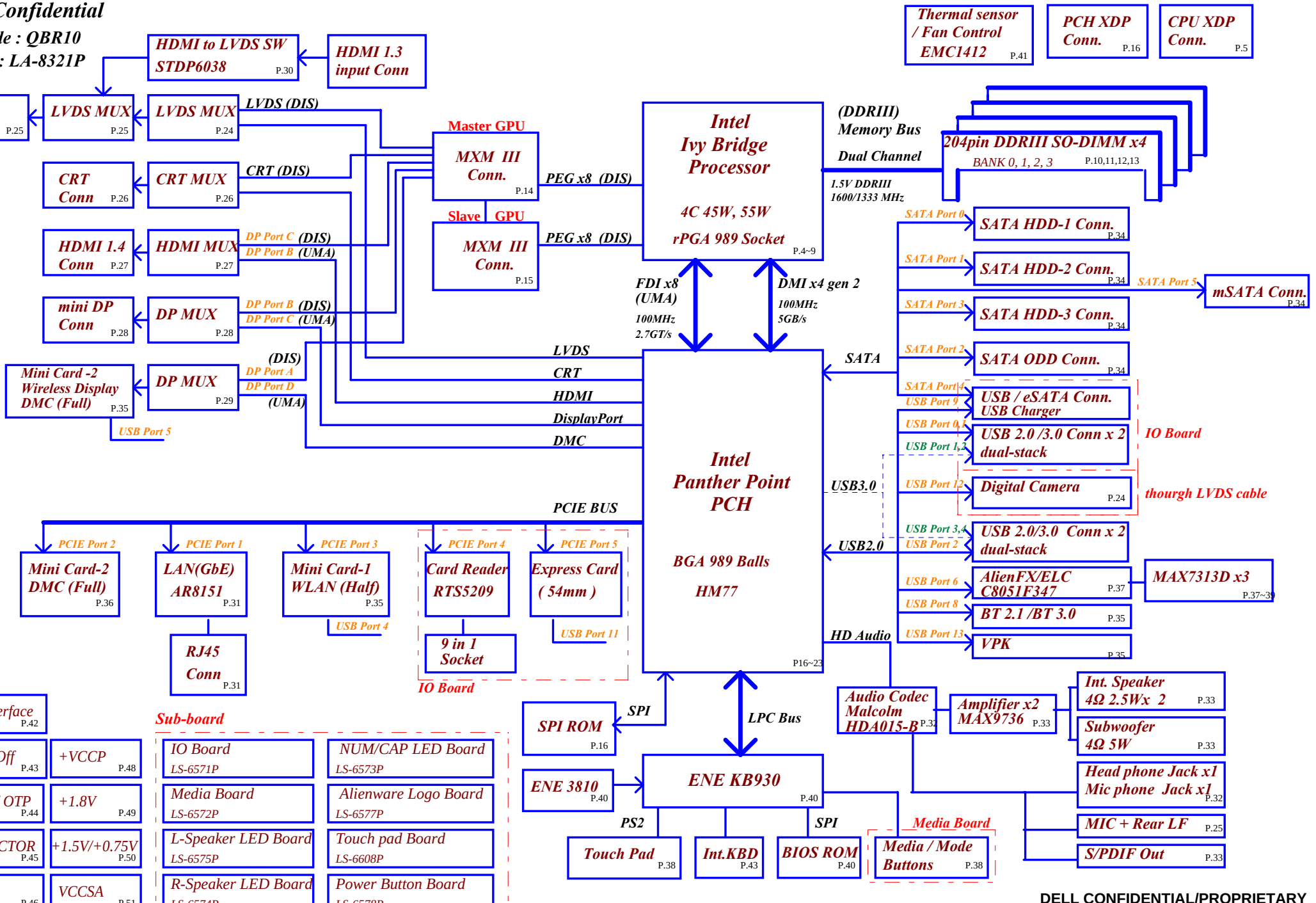

DELL CONFIDENTIAL/PROPRIETARY

PROPRIETARY NOTE: THIS SHEET OF ENGINEERING DRAWING AND SPECIFICATIONS CONTAINS CONFIDENTIAL TRADE SECRET AND OTHER PROPRIETARY INFORMATION OF DELL. THIS DOCUMENT MAY NOT BE TRANSFERRED OR COPIED WITHOUT THE EXPRESS WRITTEN AUTHORIZATION OF DELL. IN ADDITION, NEITHER THIS SHEET NOR THE INFORMATION IT CONTAINS WAY BE USED BY OR DISCLOSED TO ANY THIRD PARTY WITHOUT DELL'S EXPRESS WRITTEN CONSENT.

Compal Electronics, Inc.	
Title	SCHEMATIC M/B LA-8321
Size	Document Number 4019H5 Rev B
Date: Wednesday, August 01, 2012	Sheet 2 of 66

Board ID Table for AD channel

Vcc	3.3V +/- 5%
Ra	100K +/- 5%

Board ID	Rb	V_{AD_BID} min	V_{AD_BID} typ	V_{AD_BID} max
0	0	0 V	0 V	0 V
1	8.2K +/- 5%	0.168 V	0.250 V	0.362 V
2	18K +/- 5%	0.436 V	0.503 V	0.538 V
3	33K +/- 5%	0.712 V	0.819 V	0.875 V
4	56K +/- 5%	1.036 V	1.185 V	1.264 V
5	100K +/- 5%	1.453 V	1.650 V	1.759 V
6	200K +/- 5%	1.935 V	2.200 V	2.341 V
7	NC	2.500 V	3.300 V	3.300 V

BOARD ID Table

Board ID	PCB Revision
0	0.1
1	0.2
2	0.3
3	0.4
4	1.0
5	
6	
7	

	USB PORT#	DESTINATION
USB3.0	0	JUSB1
	1	JUSB2
	2	JUSB3
	3	JUSB4

	USB PORT#	DESTINATION
USB	0	JUSB1
	1	JUSB2
	2	JUSB3
	3	JUSB4
	4	Mini Card (WLAN)
	5	Mini Card (DMC)
	6	AlienFX/ELC
	7	None
	8	Bluetooth
	9	USB / eSATA combo
	10	None
	11	EXPRESS CARD
	12	CAMERA
	13	VPK

POWER STATES

State \ Signal	SLP S3#	SLP S4#	SLP S5#	S4 STATE#	SLP M#	ALWAYS PLANE	SUS PLANE	RUN PLANE	CLOCKS
S0 (Full ON) / M0	HIGH	HIGH	HIGH	HIGH	HIGH	ON	ON	ON	ON
S3 (Suspend to RAM) / M-OFF	LOW	HIGH		HIGH	LOW	ON	ON	OFF	OFF
S4 (Suspend to DISK) / M-OFF	LOW	LOW	HIGH	LOW	LOW	ON	OFF	OFF	OFF
S5 (SOFT OFF) / M-OFF	LOW	LOW	LOW	LOW	LOW	ON	OFF	OFF	OFF

PM TABLE

power plane / State	+5VALW +3VALW +3VLP +3V_PCH	+1.5V	+5VS +3VS +1.8VS +1.5VS +0.75VS +3VMXM +5VMXM +VCCP +VCCSA +VCC_CORE +1.5V_CPU_VDDQ
S0	ON	ON	ON
S3	ON	ON	OFF
S5 S4/AC	ON	OFF	OFF
S5 S4/AC don't exist	OFF	OFF	OFF

	DIFFERENTIAL	DESTINATION	FLEX CLOCKS	DESTINATION
CLK	CLKOUT_PCIE0	None	CLKOUTFLEX0	None
	CLKOUT_PCIE1	10/100/1G LAN	CLKOUTFLEX1	None
	CLKOUT_PCIE2	MINI CARD-2 DMC	CLKOUTFLEX2	None
	CLKOUT_PCIE3	MINI CARD-1 WLAN	CLKOUTFLEX3	None
	CLKOUT_PCIE4	CARD READER		
	CLKOUT_PCIE5	EXPRESS CARD		
	CLKOUT_PCIE6	None		
	CLKOUT_PCIE7	None		
	CLKOUT_PEG_A	MXM I		
	CLKOUT_PEG_B	MXM II		

SATA	DESTINATION
SATA0	HDD1
SATA1	HDD2
SATA2	ODD
SATA3	HDD3
SATA4	E-SATA
SATA5	mSATA

PCI EXPRESS	DESTINATION
Lane 1	10/100/1G LAN
Lane 2	MINI CARD-2 DMC
Lane 3	MINI CARD-1 WLAN
Lane 4	CARD READER
Lane 5	EXPRESS CARD
Lane 6	None
Lane 7	None
Lane 8	None

CLKOUT	DESTINATION
PCI0	PCH_LOOPBACK
PCI1	EC
PCI2	DEBUG
PCI3	None
PCI4	None

Symbol Note :

Digital Ground

Analog Ground

Power plane	Voltage
+3VALW +3VLP +3V_PCH +3VS +3VMXM	3.3V

DELL CONFIDENTIAL/PROPRIETARY

PROPRIETARY NOTE: THIS SHEET OF ENGINEERING DRAWING AND SPECIFICATIONS CONTAINS CONFIDENTIAL TRADE SECRET AND OTHER PROPRIETARY INFORMATION OF DELL. THIS DOCUMENT MAY NOT BE TRANSFERRED OR COPIED WITHOUT THE EXPRESS WRITTEN AUTHORIZATION OF DELL. IN ADDITION, NEITHER THIS SHEET NOR THE INFORMATION IT CONTAINS MAY BE USED BY OR DISCLOSED TO ANY THIRD PARTY WITHOUT DELL'S EXPRESS WRITTEN CONSENT.

PEG_ICOMPI and RCOMPO signals should be shorted and routed with - max length = 500 mils - typical impedance = 43 mohms
PEG_ICOMPO signals should be routed with - max length = 500 mils - typical impedance = 14.5 mohms

+VCCP

RC2
24.9_0402_1%

JCPUA CONN@

PEG_ICOMPI J22
PEG_ICOMPO J21
PEG_RCOMPO H22
PEG_COMP

DMI_CRX_PTX_N0 B27 DMI_RX#[0]
DMI_CRX_PTX_N1 B25 DMI_RX#[1]
DMI_CRX_PTX_N2 A25 DMI_RX#[2]
DMI_CRX_PTX_N3 B24 DMI_RX#[3]
DMI_CRX_PTX_P0 B28 DMI_RX[0]
DMI_CRX_PTX_P1 B26 DMI_RX[1]
DMI_CRX_PTX_P2 A24 DMI_RX[2]
DMI_CRX_PTX_P3 B23 DMI_RX[3]
DMI_CTX_PRX_N0 G21 DMI_TX#[0]
DMI_CTX_PRX_N1 E22 DMI_TX#[1]
DMI_CTX_PRX_N2 F21 DMI_TX#[2]
DMI_CTX_PRX_N3 D21 DMI_TX#[3]
DMI_CTX_PRX_P0 G22 DMI_TX[0]
DMI_CTX_PRX_P1 D22 DMI_TX[1]
DMI_CTX_PRX_P2 F20 DMI_TX[2]
DMI_CTX_PRX_P3 C21 DMI_TX[3]

DMI

FDI_CTX_PRX_N0 A21 FDI0_TX#[0]
FDI_CTX_PRX_N1 H19 FDI0_TX#[1]
FDI_CTX_PRX_N2 E19 FDI0_TX#[2]
FDI_CTX_PRX_N3 F18 FDI0_TX#[3]
FDI_CTX_PRX_N4 B21 FDI1_TX#[0]
FDI_CTX_PRX_N5 C20 FDI1_TX#[1]
FDI_CTX_PRX_N6 D18 FDI1_TX#[2]
FDI_CTX_PRX_N7 E17 FDI1_TX#[3]
FDI_CTX_PRX_P0 A22 FDI0_TX[0]
FDI_CTX_PRX_P1 G19 FDI0_TX[1]
FDI_CTX_PRX_P2 E20 FDI0_TX[2]
FDI_CTX_PRX_P3 G18 FDI0_TX[3]
FDI_CTX_PRX_P4 B20 FDI1_TX[0]
FDI_CTX_PRX_P5 C19 FDI1_TX[1]
FDI_CTX_PRX_P6 D19 FDI1_TX[2]
FDI_CTX_PRX_P7 F17 FDI1_TX[3]
FDI_FSYNC0 J18 FDI0_FSYNC
FDI_FSYNC1 J17 FDI1_FSYNC
FDI_INT H20 FDI_INT
FDI_LSYNC0 J19 FDI0_LSYNC
FDI_LSYNC1 H17 FDI1_LSYNC

Intel(R) FDI

+VCCP
RC14
1 2 +EDP_COM
24.9_0402_1%

eDP_COMPIO A18
eDP_ICOMPO A17
eDP_HPD# B16
eDP_AUX C15
eDP_AUX# D15
eDP_TX[0] C17
eDP_TX[1] F16
eDP_TX[2] C16
eDP_TX[3] G15
eDP_TX#[0] C18
eDP_TX#[1] E16
eDP_TX#[2] D16
eDP_TX#[3] F15

eDP

TYCO_2134146-3_IVYBRIDGE-D

PCI EXPRESS* - GRAPHICS

PEG_RX[0..15] PEG_TX[0..15]

K33	PEG_GTX_C_HRX_N0	CC1	0.22U_0402_16V7K-D	PEG_GTX_HRX_N0	PEG_GTX_HRX_N[0..15] 14,15	
M35	PEG_GTX_C_HRX_N1	CC2	0.22U_0402_16V7K-D	PEG_GTX_HRX_N1		
L34	PEG_GTX_C_HRX_N2	CC3	0.22U_0402_16V7K-D	PEG_GTX_HRX_N2		
J35	PEG_GTX_C_HRX_N3	CC4	0.22U_0402_16V7K-D	PEG_GTX_HRX_N3		
J32	PEG_GTX_C_HRX_N4	CC5	0.22U_0402_16V7K-D	PEG_GTX_HRX_N4		
H34	PEG_GTX_C_HRX_N5	CC6	0.22U_0402_16V7K-D	PEG_GTX_HRX_N5		
H31	PEG_GTX_C_HRX_N6	CC7	0.22U_0402_16V7K-D	PEG_GTX_HRX_N6		
G33	PEG_GTX_C_HRX_N7	CC8	0.22U_0402_16V7K-D	PEG_GTX_HRX_N7		
G30	PEG_GTX_C_HRX_N8	CC9	0.22U_0402_16V7K-D	PEG_GTX_HRX_N8		
F35	PEG_GTX_C_HRX_N9	CC10	0.22U_0402_16V7K-D	PEG_GTX_HRX_N9		
E34	PEG_GTX_C_HRX_N10	CC11	0.22U_0402_16V7K-D	PEG_GTX_HRX_N10		
E32	PEG_GTX_C_HRX_N11	CC12	0.22U_0402_16V7K-D	PEG_GTX_HRX_N11		
D33	PEG_GTX_C_HRX_N12	CC13	0.22U_0402_16V7K-D	PEG_GTX_HRX_N12		
D31	PEG_GTX_C_HRX_N13	CC14	0.22U_0402_16V7K-D	PEG_GTX_HRX_N13		
B33	PEG_GTX_C_HRX_N14	CC15	0.22U_0402_16V7K-D	PEG_GTX_HRX_N14		
C32	PEG_GTX_C_HRX_N15	CC16	0.22U_0402_16V7K-D	PEG_GTX_HRX_N15		
J33	PEG_GTX_C_HRX_P0	CC17	0.22U_0402_16V7K-D	PEG_GTX_HRX_P0	PEG_GTX_HRX_P[0..15] 14,15	
L35	PEG_GTX_C_HRX_P1	CC18	0.22U_0402_16V7K-D	PEG_GTX_HRX_P1		
K34	PEG_GTX_C_HRX_P2	CC19	0.22U_0402_16V7K-D	PEG_GTX_HRX_P2		
H35	PEG_GTX_C_HRX_P3	CC20	0.22U_0402_16V7K-D	PEG_GTX_HRX_P3		
H32	PEG_GTX_C_HRX_P4	CC21	0.22U_0402_16V7K-D	PEG_GTX_HRX_P4		
G34	PEG_GTX_C_HRX_P5	CC22	0.22U_0402_16V7K-D	PEG_GTX_HRX_P5		
G31	PEG_GTX_C_HRX_P6	CC23	0.22U_0402_16V7K-D	PEG_GTX_HRX_P6		
F33	PEG_GTX_C_HRX_P7	CC24	0.22U_0402_16V7K-D	PEG_GTX_HRX_P7		
F30	PEG_GTX_C_HRX_P8	CC25	0.22U_0402_16V7K-D	PEG_GTX_HRX_P8		
E35	PEG_GTX_C_HRX_P9	CC26	0.22U_0402_16V7K-D	PEG_GTX_HRX_P9		
E33	PEG_GTX_C_HRX_P10	CC27	0.22U_0402_16V7K-D	PEG_GTX_HRX_P10		
E32	PEG_GTX_C_HRX_P11	CC28	0.22U_0402_16V7K-D	PEG_GTX_HRX_P11		
D34	PEG_GTX_C_HRX_P12	CC29	0.22U_0402_16V7K-D	PEG_GTX_HRX_P12		
E31	PEG_GTX_C_HRX_P13	CC30	0.22U_0402_16V7K-D	PEG_GTX_HRX_P13		
C33	PEG_GTX_C_HRX_P14	CC31	0.22U_0402_16V7K-D	PEG_GTX_HRX_P14		
B32	PEG_GTX_C_HRX_P15	CC32	0.22U_0402_16V7K-D	PEG_GTX_HRX_P15		
M29	PEG_HTX_GRX_N0	CC33	0.22U_0402_16V7K-D	PEG_HTX_C_GRX_N0	PEG_HTX_C_GRX_N[0..15] 14,15	
M32	PEG_HTX_GRX_N1	CC34	0.22U_0402_16V7K-D	PEG_HTX_C_GRX_N1		
M31	PEG_HTX_GRX_N2	CC35	0.22U_0402_16V7K-D	PEG_HTX_C_GRX_N2		
L32	PEG_HTX_GRX_N3	CC36	0.22U_0402_16V7K-D	PEG_HTX_C_GRX_N3		
L29	PEG_HTX_GRX_N4	CC37	0.22U_0402_16V7K-D	PEG_HTX_C_GRX_N4		
K31	PEG_HTX_GRX_N5	CC38	0.22U_0402_16V7K-D	PEG_HTX_C_GRX_N5		
K28	PEG_HTX_GRX_N6	CC39	0.22U_0402_16V7K-D	PEG_HTX_C_GRX_N6		
J30	PEG_HTX_GRX_N7	CC40	0.22U_0402_16V7K-D	PEG_HTX_C_GRX_N7		
J28	PEG_HTX_GRX_N8	CC41	0.22U_0402_16V7K-D	PEG_HTX_C_GRX_N8		
H29	PEG_HTX_GRX_N9	CC42	0.22U_0402_16V7K-D	PEG_HTX_C_GRX_N9		
G27	PEG_HTX_GRX_N10	CC43	0.22U_0402_16V7K-D	PEG_HTX_C_GRX_N10		
E29	PEG_HTX_GRX_N11	CC44	0.22U_0402_16V7K-D	PEG_HTX_C_GRX_N11		
F27	PEG_HTX_GRX_N12	CC45	0.22U_0402_16V7K-D	PEG_HTX_C_GRX_N12		
D28	PEG_HTX_GRX_N13	CC46	0.22U_0402_16V7K-D	PEG_HTX_C_GRX_N13		
F26	PEG_HTX_GRX_N14	CC47	0.22U_0402_16V7K-D	PEG_HTX_C_GRX_N14		
E25	PEG_HTX_GRX_N15	CC48	0.22U_0402_16V7K-D	PEG_HTX_C_GRX_N15		
M28	PEG_HTX_GRX_P0	CC49	0.22U_0402_16V7K-D	PEG_HTX_C_GRX_P0	PEG_HTX_C_GRX_P[0..15] 14,15	
M33	PEG_HTX_GRX_P1	CC50	0.22U_0402_16V7K-D	PEG_HTX_C_GRX_P1		
M30	PEG_HTX_GRX_P2	CC51	0.22U_0402_16V7K-D	PEG_HTX_C_GRX_P2		
L31	PEG_HTX_GRX_P3	CC52	0.22U_0402_16V7K-D	PEG_HTX_C_GRX_P3		
L28	PEG_HTX_GRX_P4	CC53	0.22U_0402_16V7K-D	PEG_HTX_C_GRX_P4		
K30	PEG_HTX_GRX_P5	CC54	0.22U_0402_16V7K-D	PEG_HTX_C_GRX_P5		
K27	PEG_HTX_GRX_P6	CC55	0.22U_0402_16V7K-D	PEG_HTX_C_GRX_P6		
J29	PEG_HTX_GRX_P7	CC56	0.22U_0402_16V7K-D	PEG_HTX_C_GRX_P7		
J27	PEG_HTX_GRX_P8	CC57	0.22U_0402_16V7K-D	PEG_HTX_C_GRX_P8		
H28	PEG_HTX_GRX_P9	CC58	0.22U_0402_16V7K-D	PEG_HTX_C_GRX_P9		
G28	PEG_HTX_GRX_P10	CC59	0.22U_0402_16V7K-D	PEG_HTX_C_GRX_P10		
E28	PEG_HTX_GRX_P11	CC60	0.22U_0402_16V7K-D	PEG_HTX_C_GRX_P11		
F28	PEG_HTX_GRX_P12	CC61	0.22U_0402_16V7K-D	PEG_HTX_C_GRX_P12		
D27	PEG_HTX_GRX_P13	CC62	0.22U_0402_16V7K-D	PEG_HTX_C_GRX_P13		
E26	PEG_HTX_GRX_P14	CC63	0.22U_0402_16V7K-D	PEG_HTX_C_GRX_P14		
D25	PEG_HTX_GRX_P15	CC64	0.22U_0402_16V7K-D	PEG_HTX_C_GRX_P15		

Near MXM Connector

JCPUI CONN@

VSS

T35	VSS161	VSS234	F22
T34	VSS162	VSS235	E19
T33	VSS163	VSS236	E30
T32	VSS164	VSS237	E27
T31	VSS165	VSS238	E24
T30	VSS166	VSS239	E21
T29	VSS167	VSS240	E18
T28	VSS168	VSS241	E15
T27	VSS169	VSS242	E13
T26	VSS170	VSS243	E10
P9	VSS171	VSS244	E9
P8	VSS172	VSS245	E8
P6	VSS173	VSS246	E7
P5	VSS174	VSS247	E6
P3	VSS175	VSS248	E5
P2	VSS176	VSS249	E4
N35	VSS177	VSS250	E3
N34	VSS178	VSS251	E2
N33	VSS179	VSS252	E1
N32	VSS180	VSS253	D35
N31	VSS181	VSS254	D32
N30	VSS182	VSS255	D29
N29	VSS183	VSS256	D26
N28	VSS184	VSS257	D20
N27	VSS185	VSS258	D17
N26	VSS186	VSS259	C34
M34	VSS187	VSS260	C31
L33	VSS188	VSS261	C28
L30	VSS189	VSS262	C27
L27	VSS190	VSS263	C25
L9	VSS191	VSS264	C23
L8	VSS192	VSS265	C10
L6	VSS193	VSS266	C1
L5	VSS194	VSS267	B22
L4	VSS195	VSS268	B19
L3	VSS196	VSS269	B17
L2	VSS197	VSS270	B15
L1	VSS198	VSS271	B13
K35	VSS199	VSS272	B11
K32	VSS200	VSS273	B9
K29	VSS201	VSS274	B8
K26	VSS202	VSS275	B7
J34	VSS203	VSS276	B5
J31	VSS204	VSS277	B3
H33	VSS205	VSS278	B2
H30	VSS206	VSS279	A35
H27	VSS207	VSS280	A32
H24	VSS208	VSS281	A29
H21	VSS209	VSS282	A26
H18	VSS210	VSS283	A23
H15	VSS211	VSS284	A20
H13	VSS212	VSS285	A3
H10	VSS213		
H9	VSS214		
H8	VSS215		
H7	VSS216		
H6	VSS217		
H5	VSS218		
H4	VSS219		
H3	VSS220		
H2	VSS221		
H1	VSS222		
G35	VSS223		
G32	VSS224		
G29	VSS225		
G26	VSS226		
G23	VSS227		
G20	VSS228		
G17	VSS229		
G11	VSS230		
E34	VSS231		
E31	VSS232		
E29	VSS233		

TYCO_2134146-3_IVYBRIDGE-D

PROPRIETARY NOTE: THIS SHEET OF ENGINEERING DRAWING AND SPECIFICATIONS CONTAINS CONFIDENTIAL TRADE SECRET AND OTHER PROPRIETARY INFORMATION OF DELL. THIS DOCUMENT MAY NOT BE TRANSFERRED OR COPIED WITHOUT THE EXPRESS WRITTEN AUTHORIZATION OF DELL. IN ADDITION, NEITHER THIS SHEET NOR THE INFORMATION IT CONTAINS WAY BE USED BY OR DISCLOSED TO ANY THIRD PARTY WITHOUT DELL'S EXPRESS WRITTEN CONSENT.

DELL CONFIDENTIAL/PROPRIETARY

Compal Electronics, Inc.

Title: SCHEMATIC M/B LA-8321

Size: Document Number: 4019H5 Rev: B

Date: Wednesday, August 01, 2012 Sheet 4 of 66

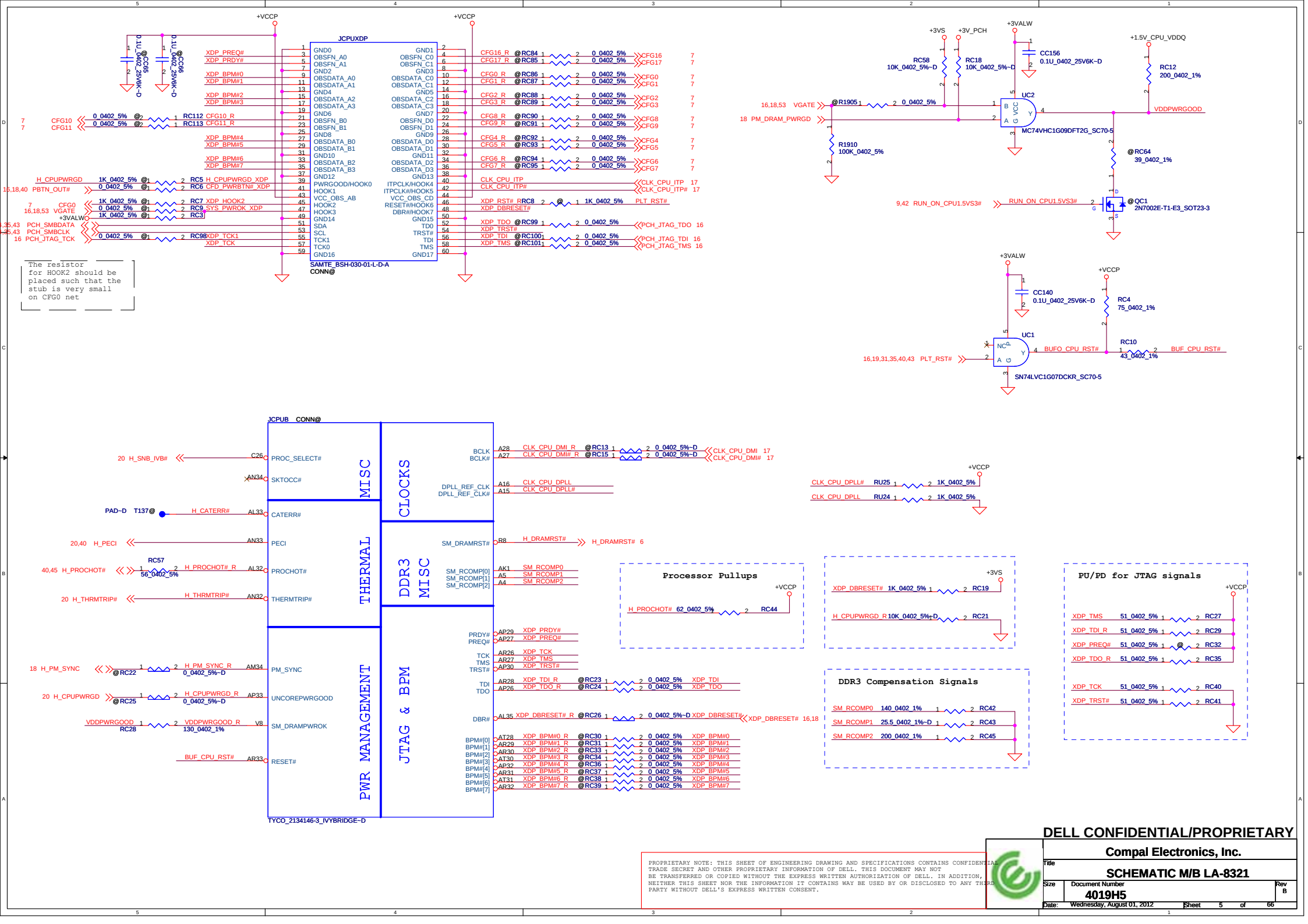
JCPUXDP
SAMTE_BSH-030-01-L-D-A
CONN@
The resistor for HOOK2 should be placed such that the stub is very small on CFG0 net
JCPUB CONN@
MISC
CLOCKS
THERMAL
DDR3 MISC
PWR MANAGEMENT
JTAG & BPM
TYCO_2134146-3_IVYBRIDGE-D
Processor Pullups
DDR3 Compensation Signals
PU/PD for JTAG signals
SN74LVC1G07DCKR_SC70-5
MC74VHC1G09DFT2G_SC70-5
2N7002E-T1-E3_SOT23-3
DELL CONFIDENTIAL/PROPRIETARY
Compal Electronics, Inc.
SCHEMATIC M/B LA-8321
4019H5
Wednesday, August 01, 2012

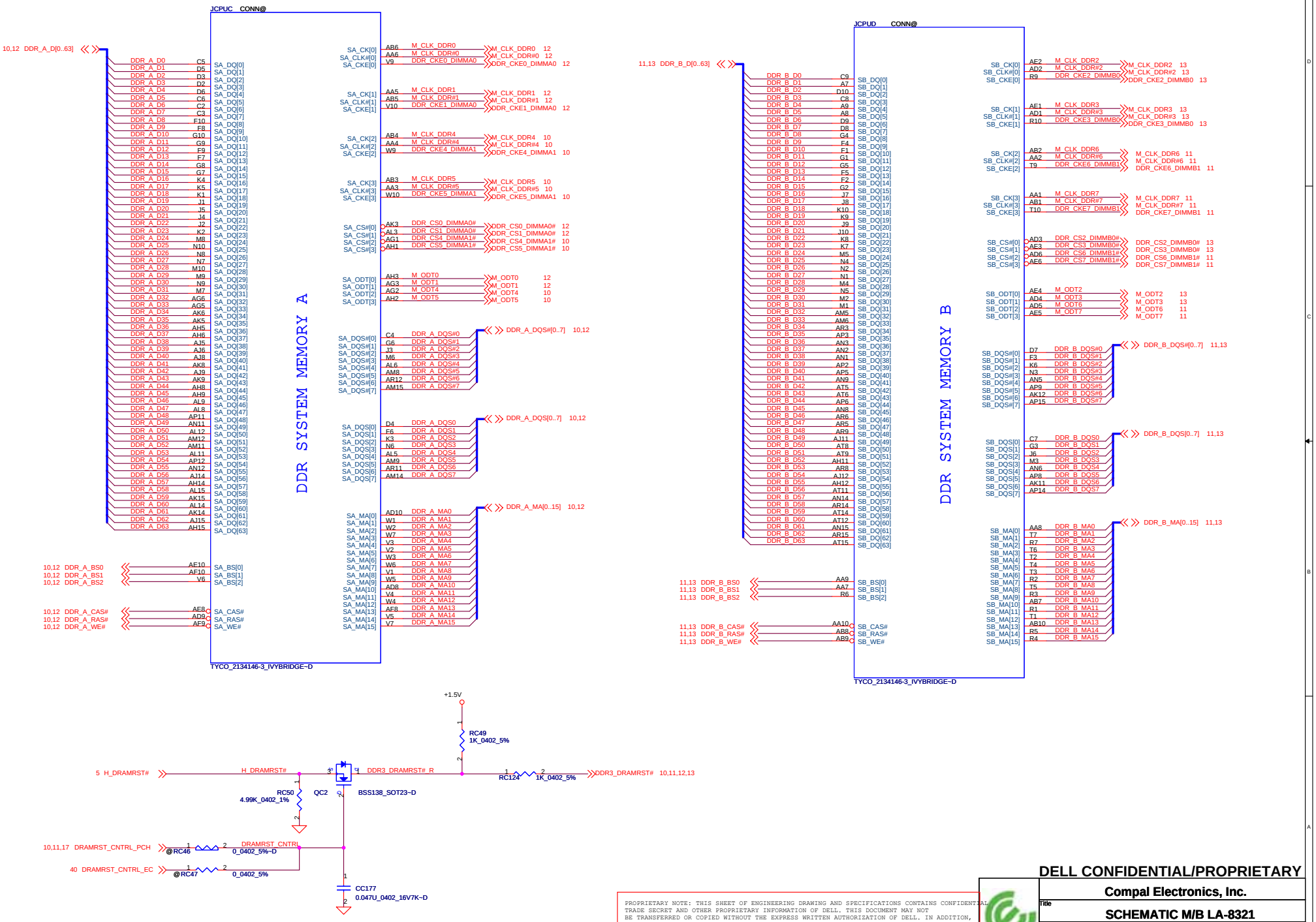

PROPRIETARY NOTE: THIS SHEET OF ENGINEERING DRAWING AND SPECIFICATIONS CONTAINS CONFIDENTIAL TRADE SECRET AND OTHER PROPRIETARY INFORMATION OF DELL. THIS DOCUMENT MAY NOT BE TRANSFERRED OR COPIED WITHOUT THE EXPRESS WRITTEN AUTHORIZATION OF DELL. IN ADDITION, NEITHER THIS SHEET NOR THE INFORMATION IT CONTAINS WAY BE USED BY OR DISCLOSED TO ANY THIRD PARTY WITHOUT DELL'S EXPRESS WRITTEN CONSENT.

DELL CONFIDENTIAL/PROPRIETARY

Compal Electronics, Inc.

Title: **SCHEMATIC M/B LA-8321**

Size: | Document Number: **4019H5** | Rev: **B**

Date: Wednesday, August 01, 2012 | Sheet 6 of 66

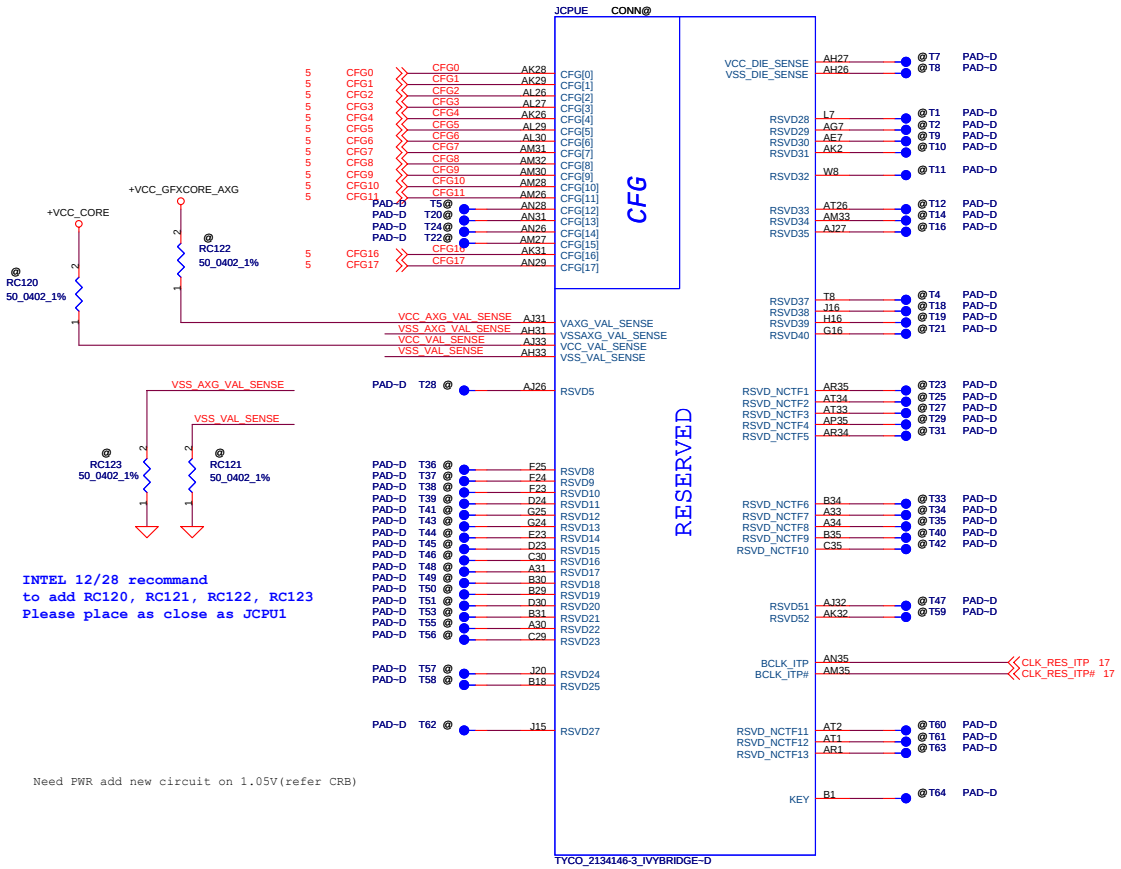

CFG Straps for Processor

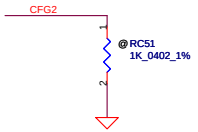

PEG Static Lane Reversal - CFG2 is for the 16x	
CFG2	1:(Default) Normal Operation; Lane # definition matches socket pin map definition 0:Lane Reversed

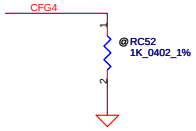

Display Port Presence Strap	
CFG4	1 : Disabled; No Physical Display Port attached to Embedded Display Port 0 : Enabled; An external Display Port device is connected to the Embedded Display Port

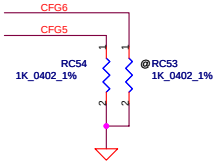

PCIE Port Bifurcation Straps	
CFG[6:5]	11: (Default) x16 - Device 1 functions 1 and 2 disabled 10: x8, x8 - Device 1 function 1 enabled ; function 2 disabled 01: Reserved - (Device 1 function 1 disabled ; function 2 enabled) 00: x8,x4,x4 - Device 1 functions 1 and 2 enabled

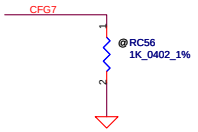

PEG DEFER TRAINING	
CFG7	1: (Default) PEG Train immediately following xxRESETB de assertion 0: PEG Wait for BIOS for training

DELL CONFIDENTIAL/PROPRIETARY

PROPRIETARY NOTE: THIS SHEET OF ENGINEERING DRAWING AND SPECIFICATIONS CONTAINS CONFIDENTIAL TRADE SECRET AND OTHER PROPRIETARY INFORMATION OF DELL. THIS DOCUMENT MAY NOT BE TRANSFERRED OR COPIED WITHOUT THE EXPRESS WRITTEN AUTHORIZATION OF DELL. IN ADDITION, NEITHER THIS SHEET NOR THE INFORMATION IT CONTAINS WAY BE USED BY OR DISCLOSED TO ANY THIRD PARTY WITHOUT DELL'S EXPRESS WRITTEN CONSENT.

Compal Electronics, Inc.

Title: SCHEMATIC M/B LA-8321

Size | Document Number: 4019H5 | Rev: B

Date: Wednesday, August 01, 2012 | Sheet 7 of 66

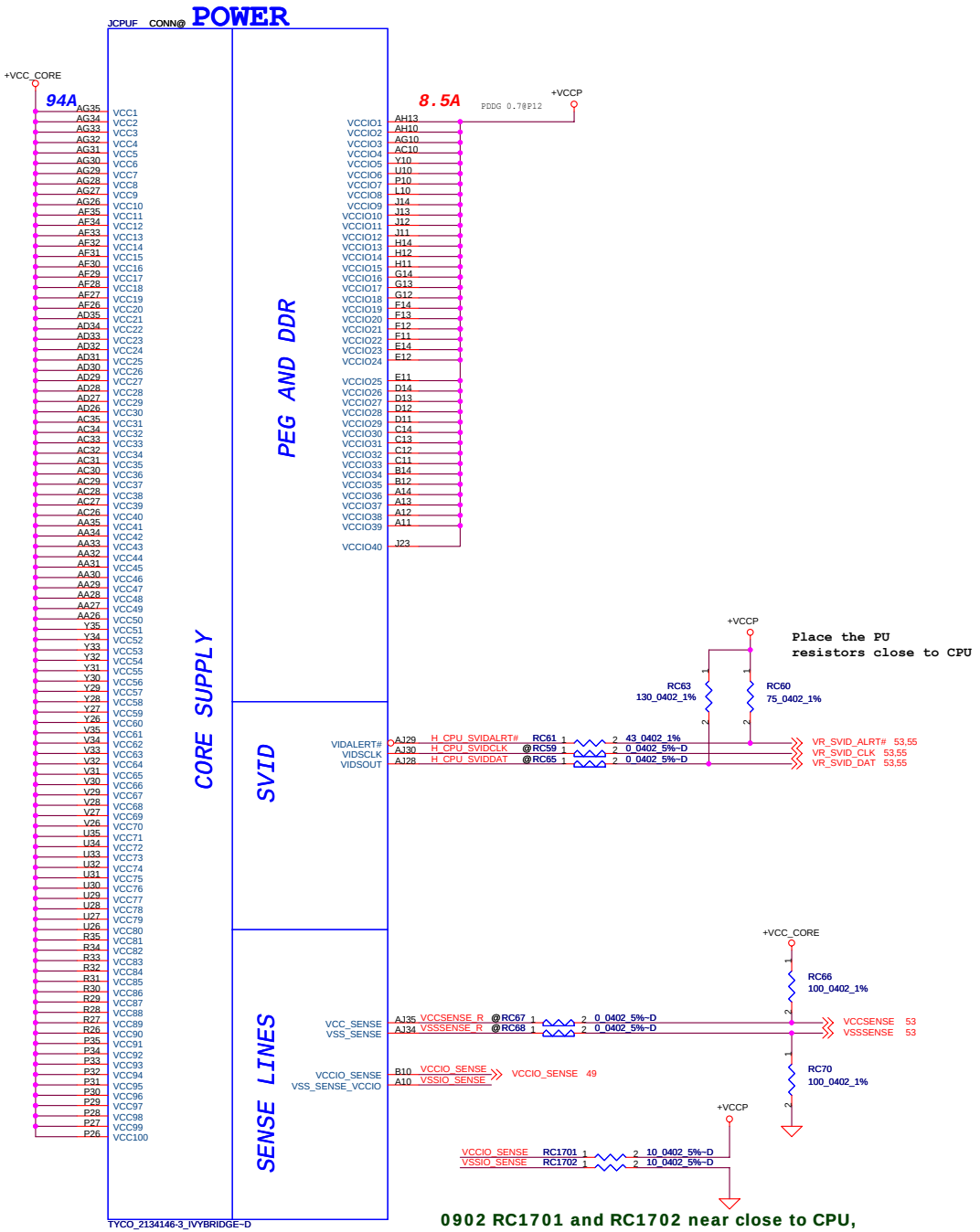

DELL CONFIDENTIAL/PROPRIETARY

PROPRIETARY NOTE: THIS SHEET OF ENGINEERING DRAWING AND SPECIFICATIONS CONTAINS CONFIDENTIAL TRADE SECRET AND OTHER PROPRIETARY INFORMATION OF DELL. THIS DOCUMENT MAY NOT BE TRANSFERRED OR COPIED WITHOUT THE EXPRESS WRITTEN AUTHORIZATION OF DELL. IN ADDITION, NEITHER THIS SHEET NOR THE INFORMATION IT CONTAINS WAY BE USED BY OR DISCLOSED TO ANY THIRD PARTY WITHOUT DELL'S EXPRESS WRITTEN CONSENT.

Compal Electronics, Inc.

Title: SCHEMATIC M/B LA-8321

Size | Document Number: 4019H5 | Rev: B

Date: Wednesday, August 01, 2012 | Sheet 8 of 66

+1.5V_CPU_VDDQ Source

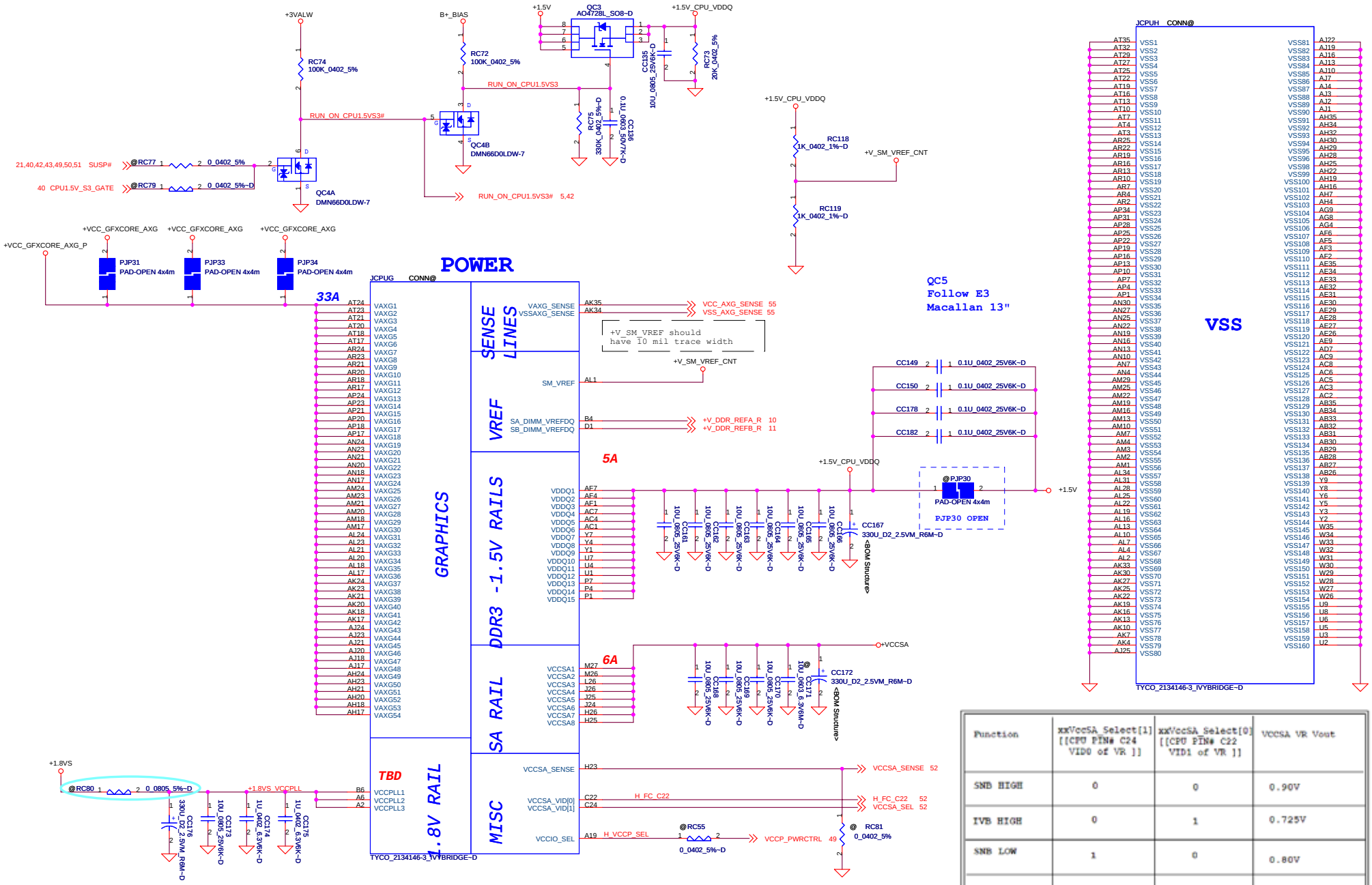

Function	xxVccSA_Select[1] [[CPU PIN# C24 VID0 of VR]]	xxVccSA_Select[0] [[CPU PIN# C22 VID1 of VR]]	VCCSA VR Vout
SNB HIGH	0	0	0.90V
IVB HIGH	0	1	0.725V
SNB LOW	1	0	0.80V
IVB LOW	1	1	0.675V

DELL CONFIDENTIAL/PROPRIETARY

PROPRIETARY NOTE: THIS SHEET OF ENGINEERING DRAWING AND SPECIFICATIONS CONTAINS CONFIDENTIAL TRADE SECRET AND OTHER PROPRIETARY INFORMATION OF DELL. THIS DOCUMENT MAY NOT BE TRANSFERRED OR COPIED WITHOUT THE EXPRESS WRITTEN AUTHORIZATION OF DELL. IN ADDITION, NEITHER THIS SHEET NOR THE INFORMATION IT CONTAINS WAY BE USED BY OR DISCLOSED TO ANY THIRD PARTY WITHOUT DELL'S EXPRESS WRITTEN CONSENT.

Compal Electronics, Inc.

Title: SCHEMATIC M/B LA-8321

Size: | Document Number: 4019H5 | Rev: B

Date: Wednesday, August 01, 2012 | Sheet 9 of 66

DIMM A0
REV TYPE (H9.2)

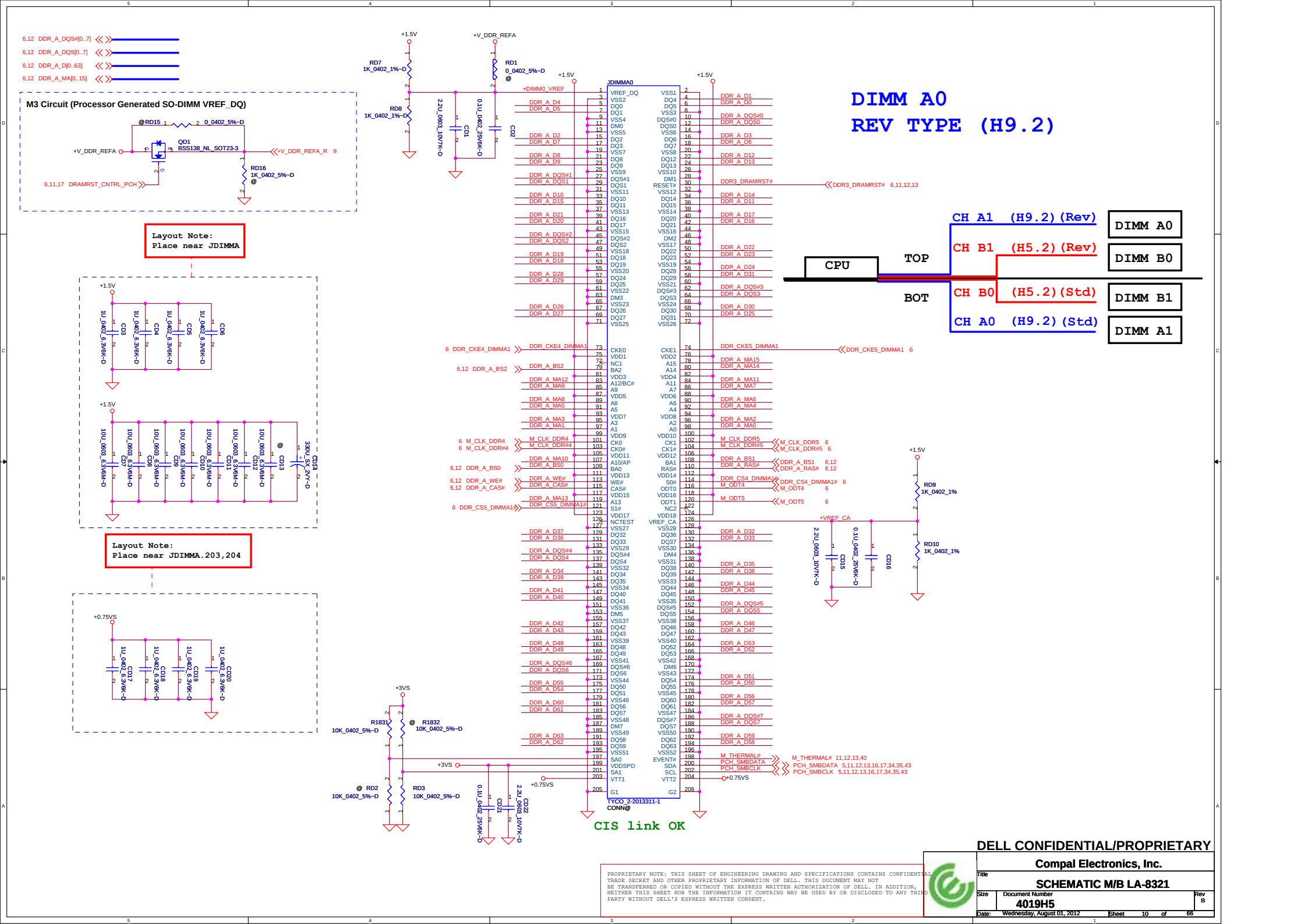

DELL CONFIDENTIAL/PROPRIETARY

PROPRIETARY NOTE: THIS SHEET OF ENGINEERING DRAWING AND SPECIFICATIONS CONTAINS CONFIDENTIAL TRADE SECRET AND OTHER PROPRIETARY INFORMATION OF DELL. THIS DOCUMENT MAY NOT BE TRANSFERRED OR COPIED WITHOUT THE EXPRESS WRITTEN AUTHORIZATION OF DELL. IN ADDITION, NEITHER THIS SHEET NOR THE INFORMATION IT CONTAINS WAY BE USED BY OR DISCLOSED TO ANY THIRD PARTY WITHOUT DELL'S EXPRESS WRITTEN CONSENT.

Compal Electronics, Inc.

Title: SCHEMATIC M/B LA-8321

Size: | Document Number: 4019H5 | Rev: B

Date: Wednesday, August 01, 2012 | Sheet 10 of 66

DIMM B0
REV TYPE (H5.2)

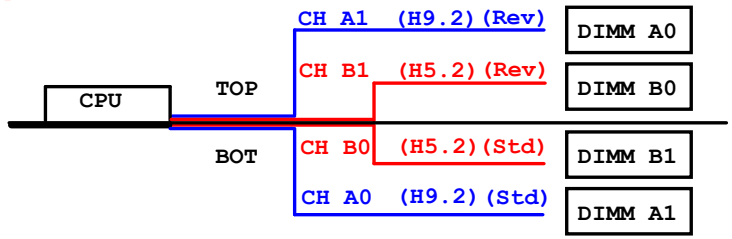

6,13 DDR_B_DQS#[0..7]
6,13 DDR_B_DQS[0..7]
6,13 DDR_B_D[0..63]
6,13 DDR_B_MA[0..15]

M3 Circuit (Processor Generated SO-DIMM VREF_DQ)

@RD17 0_0402_5%~D
QD2 BSS138_NL_SOT23-3
+V_DDR_REFB
+V_DDR_REFB_R 9
RD18 1K_0402_5%~D @
6,10,17 DRAMRST_CNTRL_PCH

RD11 1K_0402_1%~D
RD12 1K_0402_1%~D
RD4 0_0402_5%~D @
CD23 2.2U_0603_10V7K~D
CD24 0.1U_0402_25V6K~D

Layout Note:
Place near JDIMMB

CD25 1U_0402_6.3V6K~D
CD26 1U_0402_6.3V6K~D
CD27 1U_0402_6.3V6K~D
CD28 1U_0402_6.3V6K~D
CD29 10U_0603_6.3V6M~D
CD30 10U_0603_6.3V6M~D
CD31 10U_0603_6.3V6M~D
CD32 10U_0603_6.3V6M~D
CD33 10U_0603_6.3V6M~D
CD34 10U_0603_6.3V6M~D
CD35 @ 10U_0603_6.3V6M~D
CD36 330U_SX_2V~D

Layout Note:
Place near JDIMMB.203,204

CD39 1U_0402_6.3V6K~D
CD40 1U_0402_6.3V6K~D
CD41 1U_0402_6.3V6K~D
CD42 1U_0402_6.3V6K~D

JDIMMB0

+DIMM1_VREF	1	VREF_DQ	VSS1	2	
DDR_B_D5	3	VSS2	DQ4	4	DDR_B_D1
DDR_B_D4	5	DQ0	DQ5	6	DDR_B_D0
	7	DQ1	VSS3	8	
	9	VSS4	DQS#0	10	DDR_B_DQS#0
	11	DM0	DQS0	12	DDR_B_DQS0
	13	VSS5	VSS6	14	
DDR_B_D7	15	DQ2	DQ6	16	DDR_B_D2
DDR_B_D3	17	DQ3	DQ7	18	DDR_B_D6
	19	VSS7	VSS8	20	
DDR_B_D13	21	DQ8	DQ12	22	DDR_B_D8
DDR_B_D9	23	DQ9	DQ13	24	DDR_B_D12
	25	VSS9	VSS10	26	
DDR_B_DQS#1	27	DQS#1	DM1	28	
DDR_B_DQS1	29	DQS1	RESET#	30	DDR3_DRAMRST#
	31	VSS11	VSS12	32	DDR3_DRAMRST# 6,10,12,13
DDR_B_D14	33	DQ10	DQ14	34	DDR_B_D10
DDR_B_D15	35	DQ11	DQ15	36	DDR_B_D11
	37	VSS13	VSS14	38	
DDR_B_D21	39	DQ16	DQ20	40	DDR_B_D17
DDR_B_D20	41	DQ17	DQ21	42	DDR_B_D16
	43	VSS15	VSS16	44	
DDR_B_DQS#2	45	DQS#2	DM2	46	
DDR_B_DQS2	47	DQS2	VSS17	48	
	49	VSS18	DQ22	50	DDR_B_D19
DDR_B_D23	51	DQ18	DQ23	52	DDR_B_D18
DDR_B_D22	53	DQ19	VSS19	54	
	55	VSS20	DQ28	56	DDR_B_D29
DDR_B_D28	57	DQ24	DQ29	58	DDR_B_D25
DDR_B_D24	59	DQ25	VSS21	60	
	61	VSS22	DQS#3	62	DDR_B_DQS#3
	63	DM3	DQS3	64	DDR_B_DQS3
	65	VSS23	VSS24	66	
DDR_B_D30	67	DQ26	DQ30	68	DDR_B_D26
DDR_B_D31	69	DQ27	DQ31	70	DDR_B_D27
	71	VSS25	VSS26	72	
6 DDR_CKE6_DIMMB1	73	CKE0	CKE1	74	DDR_CKE7_DIMMB1 DDR_CKE7_DIMMB1 6
	75	VDD1	VDD2	76	
	77	NC1	A15	78	DDR_B_MA15
6,13 DDR_B_BS2	79	BA2	A14	80	DDR_B_MA14
DDR_B_MA12	81	VDD3	VDD4	82	
DDR_B_MA9	83	A12/BC#	A11	84	DDR_B_MA11
	85	A9	A7	86	DDR_B_MA7
DDR_B_MA8	87	VDD5	VDD6	88	
DDR_B_MA5	89	A8	A6	90	DDR_B_MA6
	91	A5	A4	92	DDR_B_MA4
DDR_B_MA3	93	VDD7	VDD8	94	
DDR_B_MA1	95	A3	A2	96	DDR_B_MA2
	97	A1	A0	98	DDR_B_MA0
	99	VDD9	VDD10	100	
6 M_CLK_DDR6	101	CK0	CK1	102	M_CLK_DDR7 M_CLK_DDR7 6
6 M_CLK_DDR#6	103	CK0#	CK1#	104	M_CLK_DDR#7 M_CLK_DDR#7 6
	105	VDD11	VDD12	106	
DDR_B_MA10	107	A10/AP	BA1	108	DDR_B_BS1 DDR_B_BS1 6,13
6,13 DDR_B_BS0	109	BA0	RAS#	110	DDR_B_RAS# DDR_B_RAS# 6,13
	111	VDD13	VDD14	112	
6,13 DDR_B_WE#	113	WE#	S0#	114	DDR_CS6_DIMMB1# DDR_CS6_DIMMB1# 6
6,13 DDR_B_CAS#	115	CAS#	ODT0	116	M_ODT6 M_ODT6 6
	117	VDD15	VDD16	118	
DDR_B_MA13	119	A13	ODT1	120	M_ODT7 M_ODT7 6
6 DDR_CS7_DIMMB1#	121	S1#	NC2	122	
	123	VDD17	VDD18	124	
	125	NCTEST	VREF_CA	126	+VREF_CB
	127	VSS27	VSS28	128	
DDR_B_D37	129	DQ32	DQ36	130	DDR_B_D32
DDR_B_D36	131	DQ33	DQ37	132	DDR_B_D33
	133	VSS29	VSS30	134	
DDR_B_DQS#4	135	DQS#4	DM4	136	
DDR_B_DQS4	137	DQS4	VSS31	138	
	139	VSS32	DQ38	140	DDR_B_D38
DDR_B_D34	141	DQ34	DQ39	142	DDR_B_D39
DDR_B_D35	143	DQ35	VSS33	144	
	145	VSS34	DQ44	146	DDR_B_D41
DDR_B_D40	147	DQ40	DQ45	148	DDR_B_D45
DDR_B_D47	149	DQ41	VSS35	150	
	151	VSS36	DQS#5	152	DDR_B_DQS#5
	153	DM5	DQS5	154	DDR_B_DQS5
	155	VSS37	VSS38	156	
DDR_B_D43	157	DQ42	DQ46	158	DDR_B_D46
DDR_B_D44	159	DQ43	DQ47	160	DDR_B_D42
	161	VSS39	VSS40	162	
DDR_B_D48	163	DQ48	DQ52	164	DDR_B_D52
DDR_B_D49	165	DQ49	DQ53	166	DDR_B_D53
	167	VSS41	VSS42	168	
DDR_B_DQS#6	169	DQS#6	DM6	170	
DDR_B_DQS6	171	DQS6	VSS43	172	
	173	VSS44	DQ54	174	DDR_B_D54
DDR_B_D55	175	DQ50	DQ55	176	DDR_B_D50
DDR_B_D51	177	DQ51	VSS45	178	
	179	VSS46	DQ60	180	DDR_B_D60
DDR_B_D61	181	DQ56	DQ61	182	DDR_B_D56
DDR_B_D57	183	DQ57	VSS47	184	
	185	VSS48	DQS#7	186	DDR_B_DQS#7
	187	DM7	DQS7	188	DDR_B_DQS7
	189	VSS49	VSS50	190	
DDR_B_D63	191	DQ58	DQ62	192	DDR_B_D62
DDR_B_D59	193	DQ59	DQ63	194	DDR_B_D58
	195	VSS51	VSS52	196	
	197	SA0	EVENT#	198	M_THERMAL# M_THERMAL# 10,12,13,40
	199	VDDSPD	SDA	200	PCH_SMBDATA PCH_SMBDATA 5,10,12,13,16,17,34,35,43
	201	SA1	SCL	202	PCH_SMBCLK PCH_SMBCLK 5,10,12,13,16,17,34,35,43
	203	VTT1	VTT2	204	+0.75VS
	205	G1	G2	206	

TYCO_2-2013290-1
CONN@

RD13 1K_0402_1%
RD14 1K_0402_1%
CD37 2.2U_0603_10V7K~D
CD38 0.1U_0402_25V6K~D

R1833 10K_0402_5%~D
RD5 10K_0402_5%~D
@ RD6 10K_0402_5%~D
@R1834 10K_0402_5%~D
CD43 0.1U_0402_25V6K~D
CD44 2.2U_0603_10V7K~D

CIS link OK

PROPRIETARY NOTE: THIS SHEET OF ENGINEERING DRAWING AND SPECIFICATIONS CONTAINS CONFIDENTIAL TRADE SECRET AND OTHER PROPRIETARY INFORMATION OF DELL. THIS DOCUMENT MAY NOT BE TRANSFERRED OR COPIED WITHOUT THE EXPRESS WRITTEN AUTHORIZATION OF DELL. IN ADDITION, NEITHER THIS SHEET NOR THE INFORMATION IT CONTAINS WAY BE USED BY OR DISCLOSED TO ANY THIRD PARTY WITHOUT DELL'S EXPRESS WRITTEN CONSENT.

DELL CONFIDENTIAL/PROPRIETARY

Compal Electronics, Inc.

Title: SCHEMATIC M/B LA-8321

Size: | Document Number: 4019H5 | Rev: B

Date: Wednesday, August 01, 2012 | Sheet 11 of 66

DIMM A1
STD TYPE (H9.2)

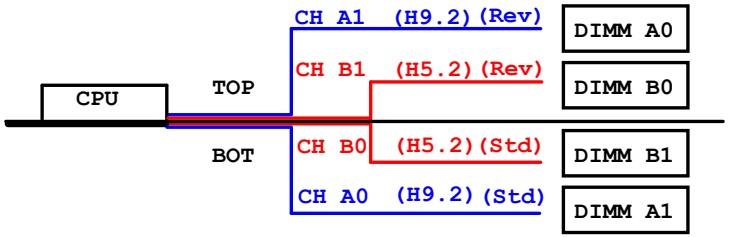

Layout Note:
Place near JDIMMC

Layout Note:
Place near JDIMMC.203,204

JDIMMA1

TYCO_2-2013310-1
CONN@

CIS link OK

DELL CONFIDENTIAL/PROPRIETARY

PROPRIETARY NOTE: THIS SHEET OF ENGINEERING DRAWING AND SPECIFICATIONS CONTAINS CONFIDENTIAL TRADE SECRET AND OTHER PROPRIETARY INFORMATION OF DELL. THIS DOCUMENT MAY NOT BE TRANSFERRED OR COPIED WITHOUT THE EXPRESS WRITTEN AUTHORIZATION OF DELL. IN ADDITION, NEITHER THIS SHEET NOR THE INFORMATION IT CONTAINS WAY BE USED BY OR DISCLOSED TO ANY THIRD PARTY WITHOUT DELL'S EXPRESS WRITTEN CONSENT.

Compal Electronics, Inc.	
Title	SCHEMATIC M/B LA-8321
Size	Document Number 4019H5
Rev	B
Date:	Wednesday, August 01, 2012
Sheet	12 of 66

DIMM B1
STD TYPE (H5.2)

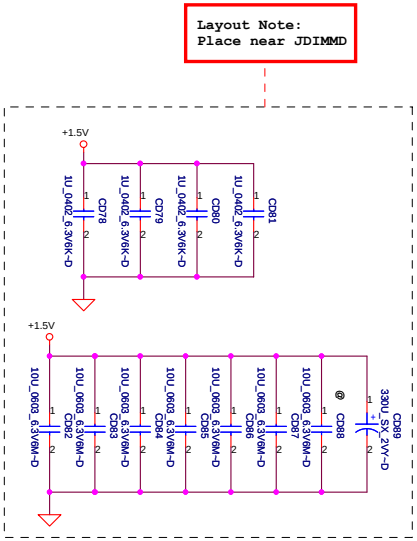

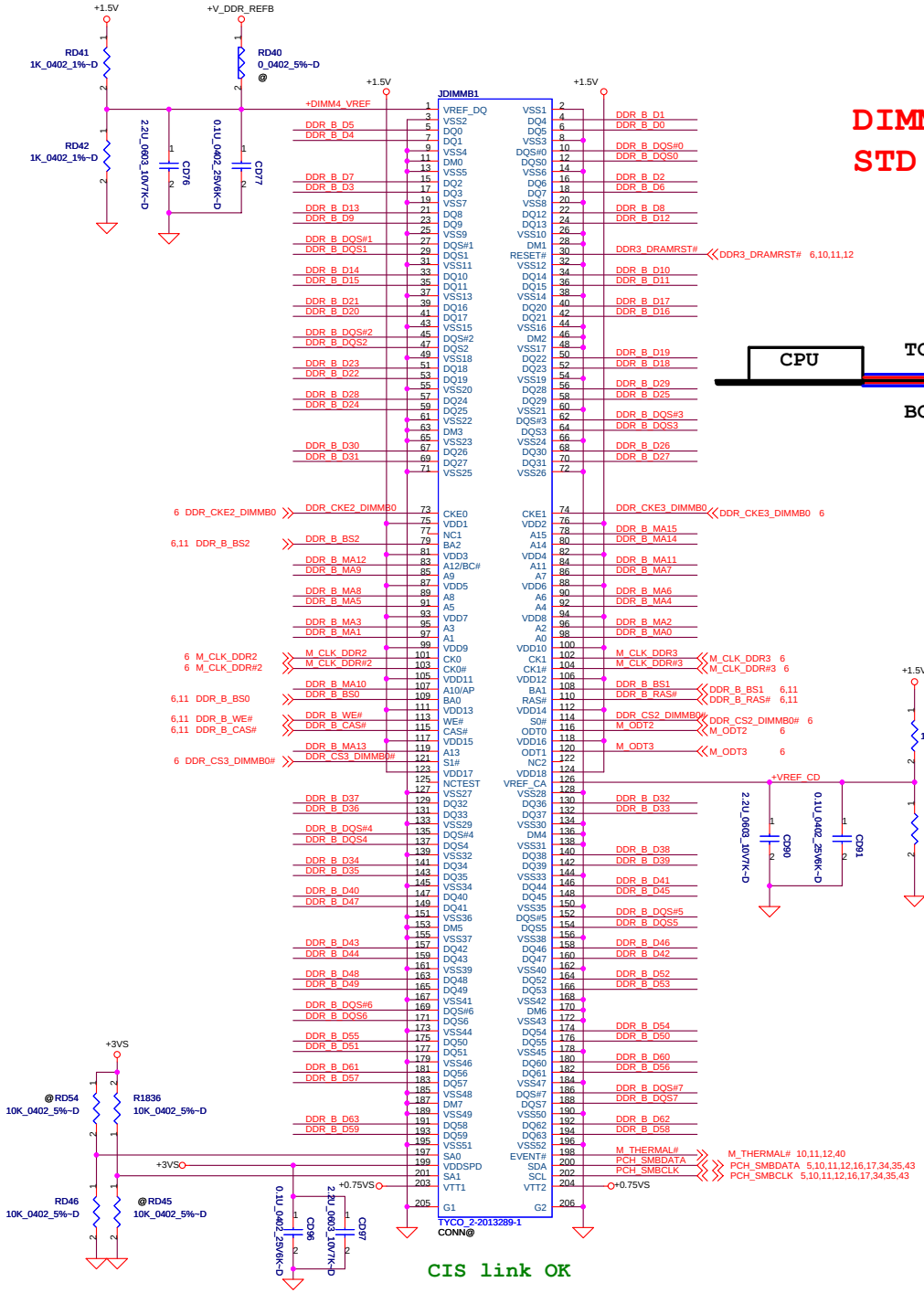

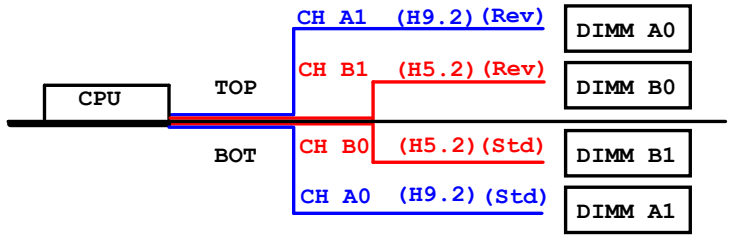

CIS link OK

DELL CONFIDENTIAL/PROPRIETARY

PROPRIETARY NOTE: THIS SHEET OF ENGINEERING DRAWING AND SPECIFICATIONS CONTAINS CONFIDENTIAL TRADE SECRET AND OTHER PROPRIETARY INFORMATION OF DELL. THIS DOCUMENT MAY NOT BE TRANSFERRED OR COPIED WITHOUT THE EXPRESS WRITTEN AUTHORIZATION OF DELL. IN ADDITION, NEITHER THIS SHEET NOR THE INFORMATION IT CONTAINS WAY BE USED BY OR DISCLOSED TO ANY THIRD PARTY WITHOUT DELL'S EXPRESS WRITTEN CONSENT.

Compal Electronics, Inc.

Title: SCHEMATIC M/B LA-8321

Size | Document Number: 4019H5 | Rev: B

Date: Wednesday, August 01, 2012 | Sheet 13 of 66

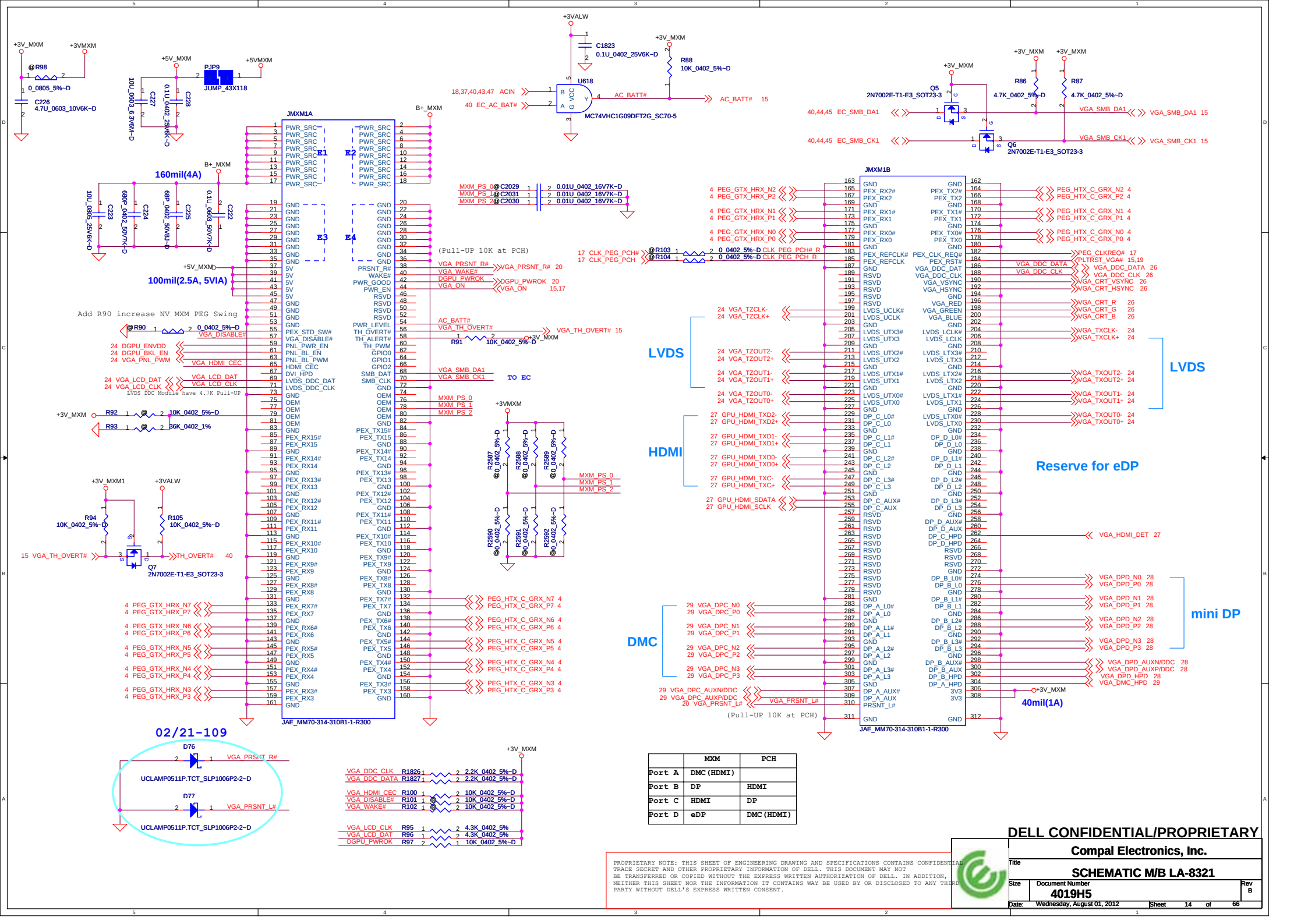

	MXM	PCH
Port A	DMC(HDMI)	
Port B	DP	HDMI
Port C	HDMI	DP
Port D	eDP	DMC(HDMI)

DELL CONFIDENTIAL/PROPRIETARY

PROPRIETARY NOTE: THIS SHEET OF ENGINEERING DRAWING AND SPECIFICATIONS CONTAINS CONFIDENTIAL TRADE SECRET AND OTHER PROPRIETARY INFORMATION OF DELL. THIS DOCUMENT MAY NOT BE TRANSFERRED OR COPIED WITHOUT THE EXPRESS WRITTEN AUTHORIZATION OF DELL. IN ADDITION, NEITHER THIS SHEET NOR THE INFORMATION IT CONTAINS WAY BE USED BY OR DISCLOSED TO ANY THIRD PARTY WITHOUT DELL'S EXPRESS WRITTEN CONSENT.

Compal Electronics, Inc.

Title: SCHEMATIC M/B LA-8321

Size: | Document Number: 4019H5 | Rev: B

Date: Wednesday, August 01, 2012 | Sheet 14 of 66

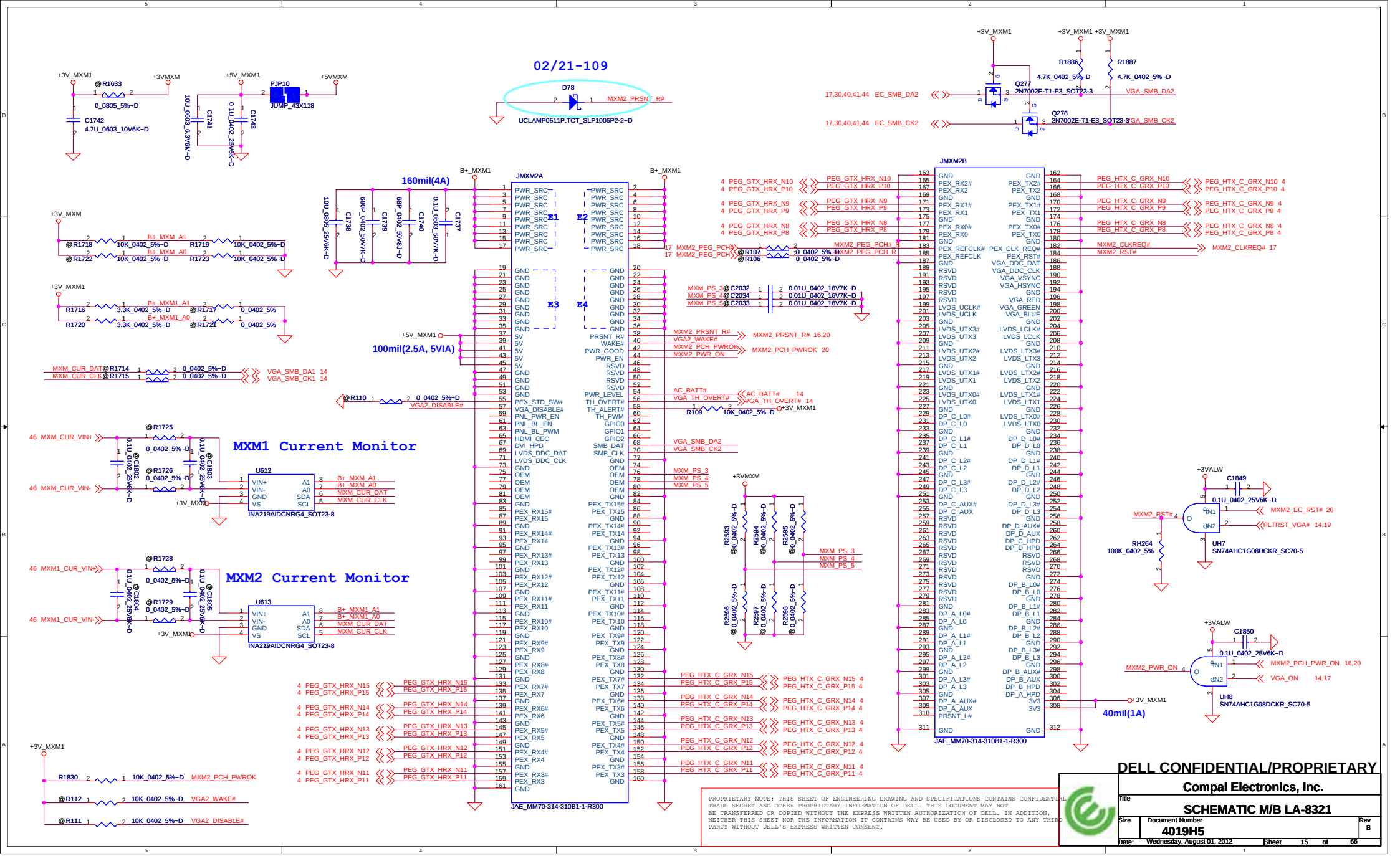

PROPRIETARY NOTE: THIS SHEET OF ENGINEERING DRAWING AND SPECIFICATIONS CONTAINS CONFIDENTIAL TRADE SECRET AND OTHER PROPRIETARY INFORMATION OF DELL. THIS DOCUMENT MAY NOT BE TRANSFERRED OR COPIED WITHOUT THE EXPRESS WRITTEN AUTHORIZATION OF DELL. IN ADDITION, NEITHER THIS SHEET NOR THE INFORMATION IT CONTAINS WAY BE USED BY OR DISCLOSED TO ANY THIRD PARTY WITHOUT DELL'S EXPRESS WRITTEN CONSENT.

DELL CONFIDENTIAL/PROPRIETARY

Compal Electronics, Inc.

Title: SCHEMATIC M/B LA-8321

Size	Document Number	Rev
	4019H5	B

Date: Wednesday, August 01, 2012 Sheet 15 of 66

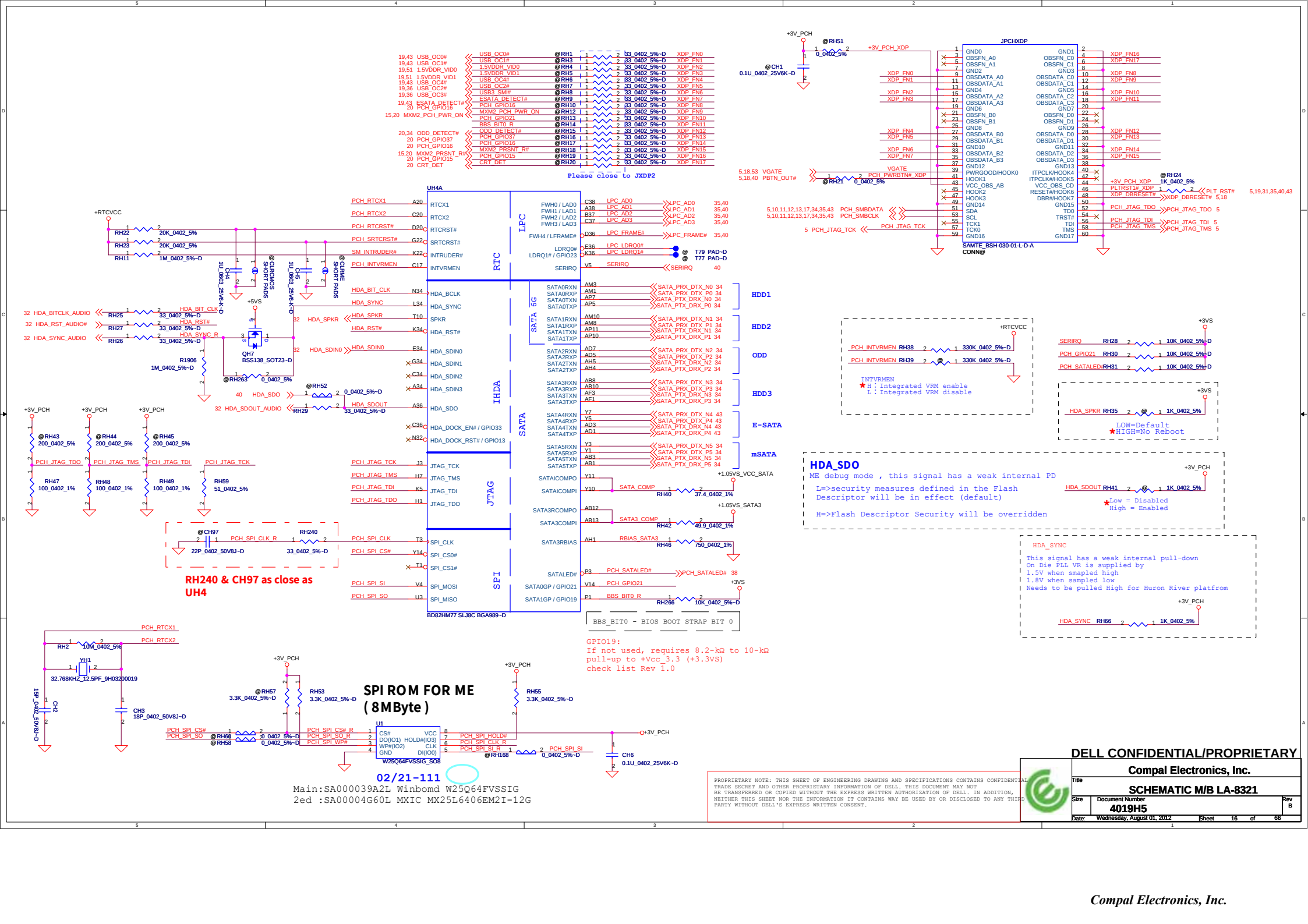

Compal Electronics, Inc.

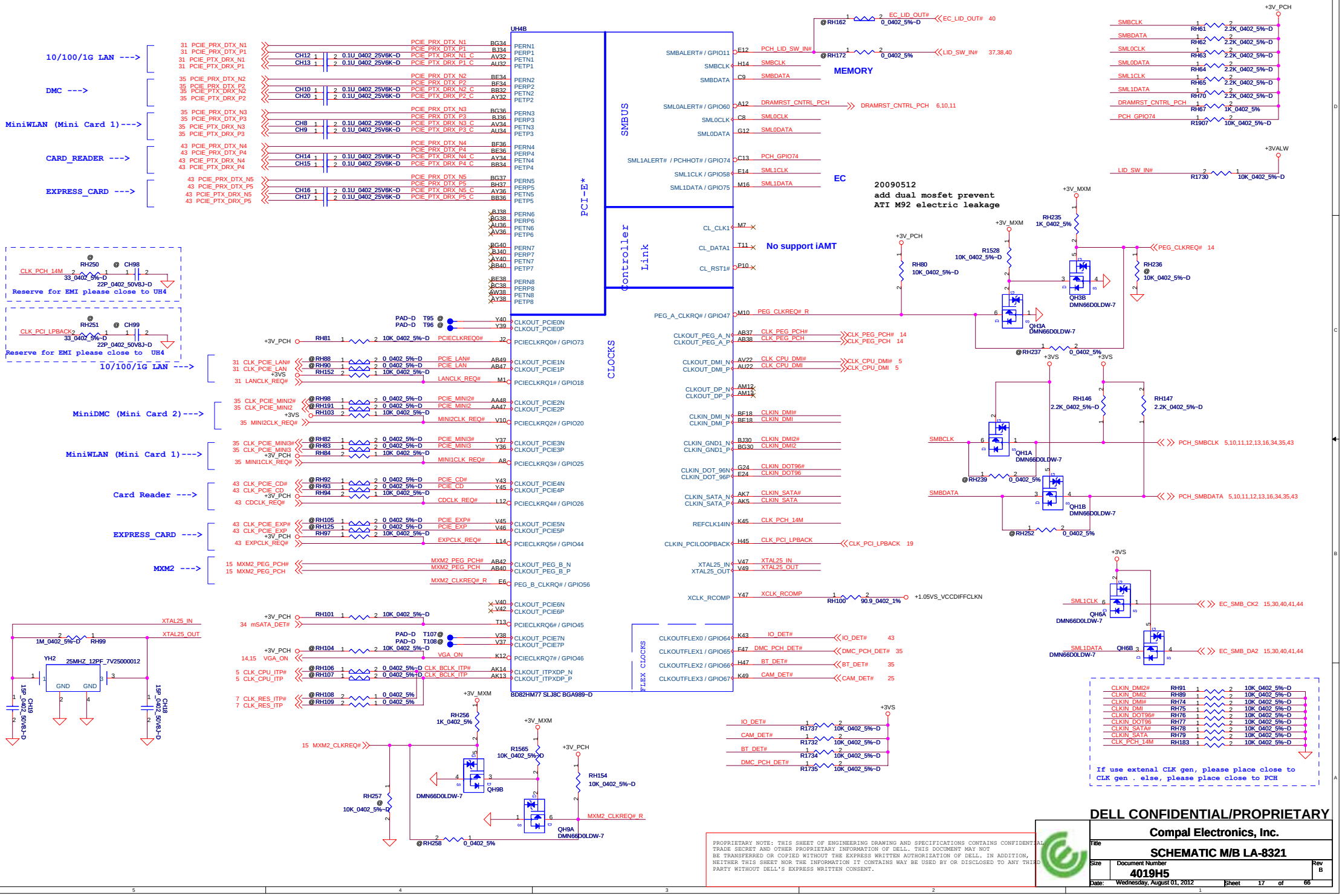
10/100/1G LAN --->
DMC --->
MiniWLAN (Mini Card 1)--->
CARD_READER --->
EXPRESS_CARD --->
UH4B
PCI-E*
SMBUS
Controller Link
CLOCKS
FLEX CLOCKS
BD82HM77 SLJ8C BGA989-D
MEMORY
EC
No support iAMT
20090512
add dual mosfet prevent
ATI M92 electric leakage
Reserve for EMI please close to UH4
Reserve for EMI please close to UH4
10/100/1G LAN --->
MiniDMC (Mini Card 2)--->
MiniWLAN (Mini Card 1)--->
Card Reader --->
EXPRESS_CARD --->
MXM2 --->
If use extenal CLK gen, please place close to CLK gen . else, please place close to PCH
DELL CONFIDENTIAL/PROPRIETARY
Compal Electronics, Inc.
SCHEMATIC M/B LA-8321
4019H5
Wednesday, August 01, 2012

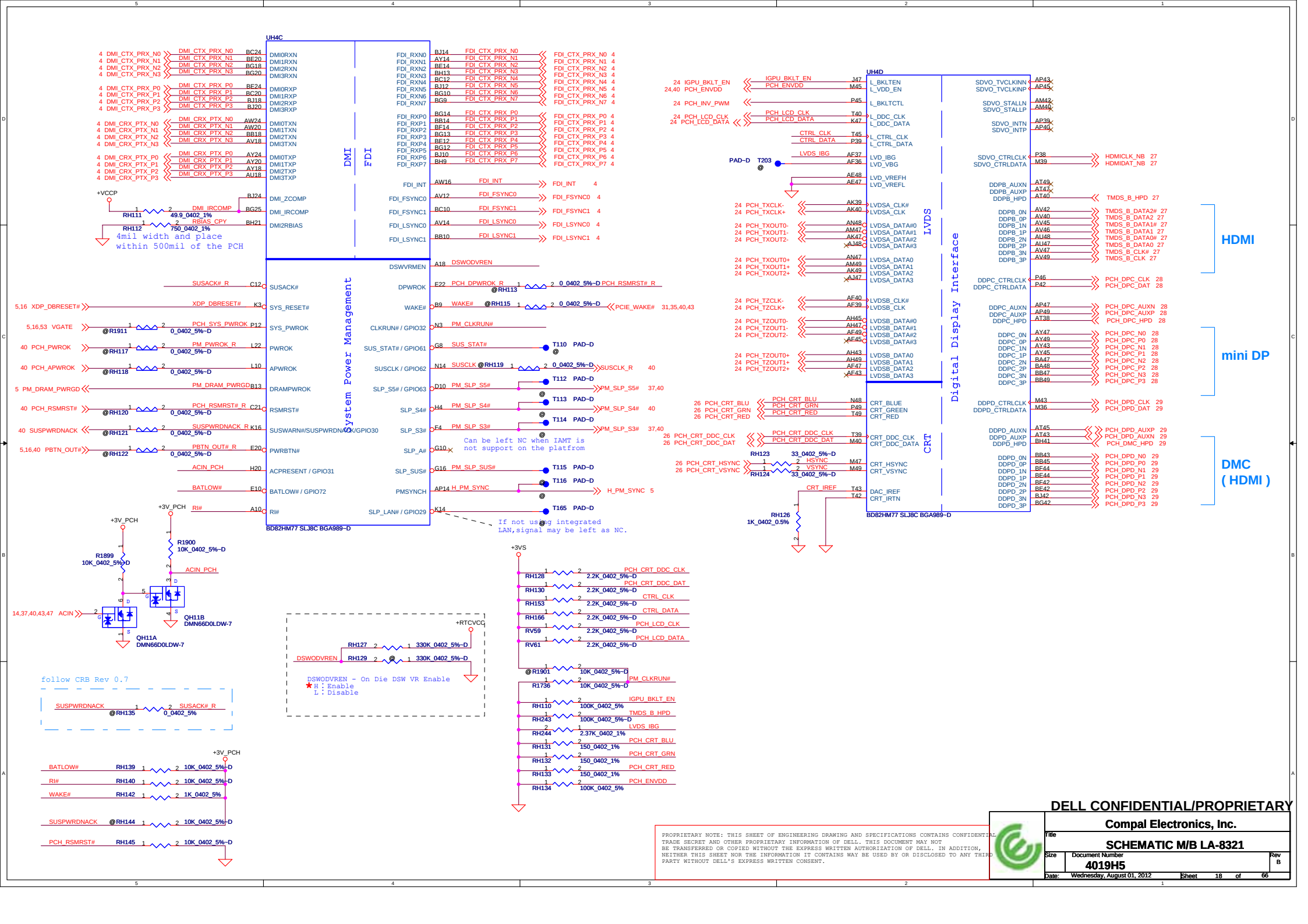

DELL CONFIDENTIAL/PROPRIETARY

PROPRIETARY NOTE: THIS SHEET OF ENGINEERING DRAWING AND SPECIFICATIONS CONTAINS CONFIDENTIAL TRADE SECRET AND OTHER PROPRIETARY INFORMATION OF DELL. THIS DOCUMENT MAY NOT BE TRANSFERRED OR COPIED WITHOUT THE EXPRESS WRITTEN AUTHORIZATION OF DELL. IN ADDITION, NEITHER THIS SHEET NOR THE INFORMATION IT CONTAINS WAY BE USED BY OR DISCLOSED TO ANY THIRD PARTY WITHOUT DELL'S EXPRESS WRITTEN CONSENT.

Compal Electronics, Inc.

Title: SCHEMATIC M/B LA-8321

Size: | Document Number: 4019H5 | Rev: B

Date: Wednesday, August 01, 2012 | Sheet 18 of 66

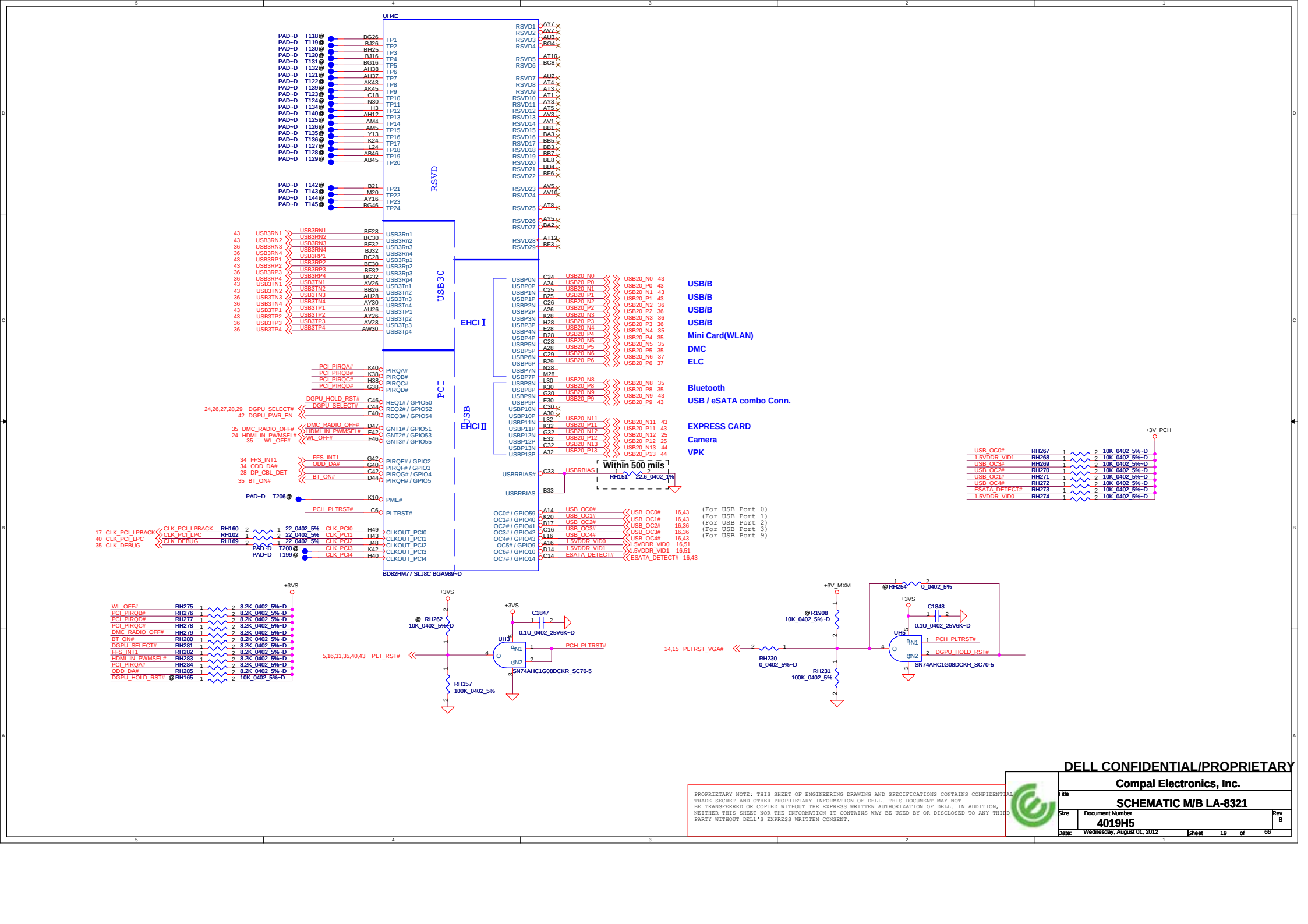
UH4E
RSVD
USB30
EHCI I
PCI
USB
EHCI II
BD82HM77 SLJ8C BGA989-D
USB/B
USB/B
USB/B
USB/B
Mini Card(WLAN)
DMC
ELC
Bluetooth
USB / eSATA combo Conn.
EXPRESS CARD
Camera
VPK
Within 500 mils
+3V_PCH
+3VS
+3V_MXM
SN74AHC1G08DCKR_SC70-5
DELL CONFIDENTIAL/PROPRIETARY
Compal Electronics, Inc.
SCHEMATIC M/B LA-8321
Document Number
4019H5
Rev
B
Wednesday, August 01, 2012
Sheet 19 of 66

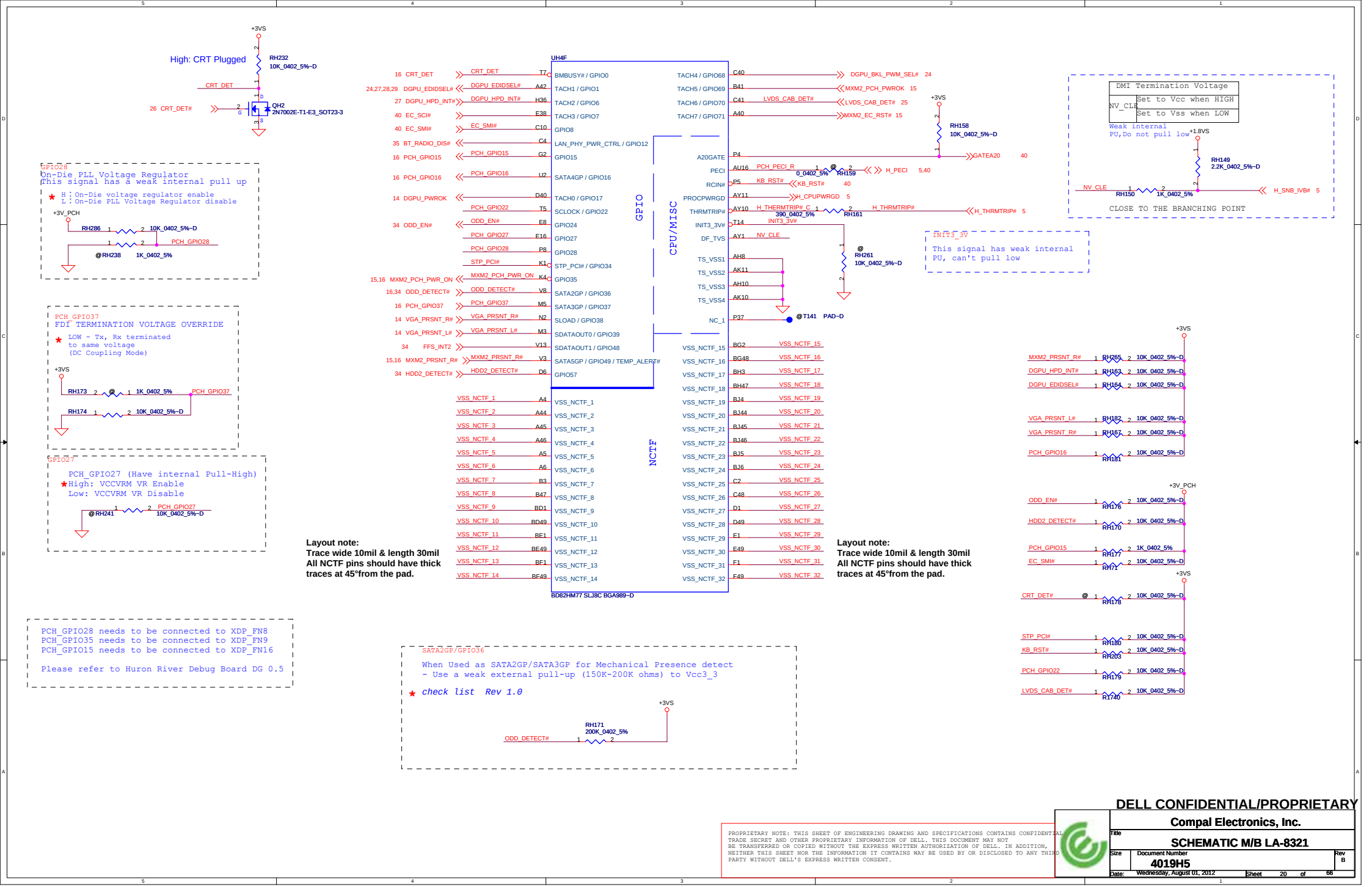

DELL CONFIDENTIAL/PROPRIETARY

PROPRIETARY NOTE: THIS SHEET OF ENGINEERING DRAWING AND SPECIFICATIONS CONTAINS CONFIDENTIAL TRADE SECRET AND OTHER PROPRIETARY INFORMATION OF DELL. THIS DOCUMENT MAY NOT BE TRANSFERRED OR COPIED WITHOUT THE EXPRESS WRITTEN AUTHORIZATION OF DELL. IN ADDITION, NEITHER THIS SHEET NOR THE INFORMATION IT CONTAINS WAY BE USED BY OR DISCLOSED TO ANY THIRD PARTY WITHOUT DELL'S EXPRESS WRITTEN CONSENT.

Compal Electronics, Inc.

Title: SCHEMATIC M/B LA-8321

Size | Document Number: 4019H5 | Rev: B

Date: Wednesday, August 01, 2012 | Sheet 20 of 66

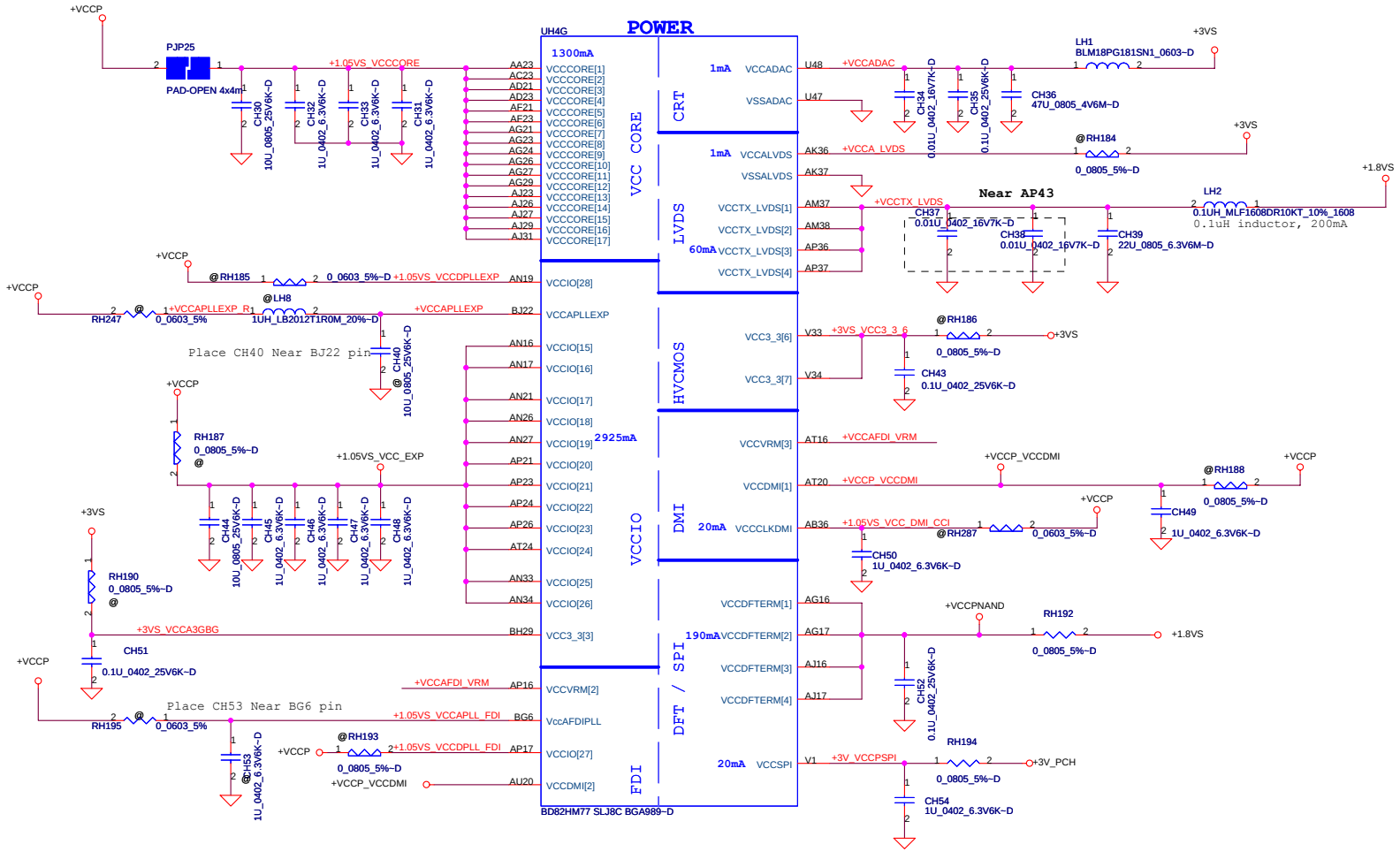

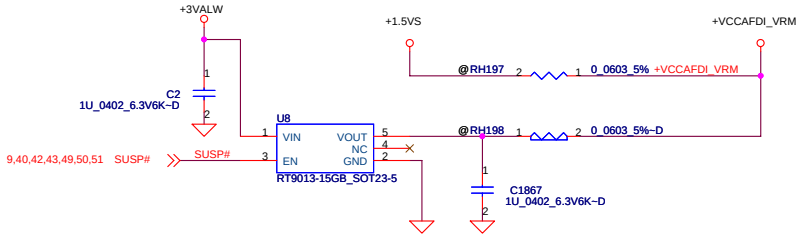

PCH Power Rail Table

Voltage Rail	Voltage	S0 Iccmax Current (A)
V_PROC_IO	1.05	0.001
V5REF	5	0.001
V5REF_Sus	5	0.001
Vcc3_3	3.3	0.266
VccADAC	3.3	0.001
VccADPLLA	1.05	0.08
VccADPLLB	1.05	0.08
VccCore	1.05	1.3
VccDMI	1.05	0.042
VccIO	1.05	2.925
VccASW	1.05	1.01
VccSPI	3.3	0.02
VccDSW	3.3	0.003
VccpNAND	1.8	0.19
VccRTC	3.3	6 uA
VccSus3_3	3.3	0.119
VccSusHDA	3.3 / 1.5	0.01
VccVRM	1.8 / 1.5	0.16
VccCLKDMI	1.05	0.02
VccSSC	1.05	0.095
VccDIFFCLKN	1.05	0.055
VccALVDS	3.3	0.001
VccTX_LVDS	1.8	0.06

VCCVRM = 160mA detal waiting for newest spec

DELL CONFIDENTIAL/PROPRIETARY

PROPRIETARY NOTE: THIS SHEET OF ENGINEERING DRAWING AND SPECIFICATIONS CONTAINS CONFIDENTIAL TRADE SECRET AND OTHER PROPRIETARY INFORMATION OF DELL. THIS DOCUMENT MAY NOT BE TRANSFERRED OR COPIED WITHOUT THE EXPRESS WRITTEN AUTHORIZATION OF DELL. IN ADDITION, NEITHER THIS SHEET NOR THE INFORMATION IT CONTAINS WAY BE USED BY OR DISCLOSED TO ANY THIRD PARTY WITHOUT DELL'S EXPRESS WRITTEN CONSENT.

Compal Electronics, Inc.

Title: SCHEMATIC M/B LA-8321

Size: | Document Number: 4019H5 | Rev: B

Date: Wednesday, August 01, 2012 | Sheet 21 of 66

VCC3_3 = 266mA detal waiting for newest spec
VCCDMI = 42mA detal waiting for newest spec

POWER

UH4J

BD82HM77 SLJ8C BGA989~D

Clock and Miscellaneous
USB
PCI/GPIO/LPC
SATA
MISC
CPU
RTC
HDA

+VCCP
+3V_PCH
+3V_DSW
+3VALW
+3VS
+5VALW
+5V_PCH
+5VS
+RTCVCC

RH200 @ 0_0603_5% +VCCACLK
RH201 @ 0_0603_5%~D
RH253 @ 0_0603_5%
CH55 0.1U_0402_25V6K~D
RH204 @ 0_0805_5%
LH3 10UH_LBR2012T100M_20%~D
+VCCAPLL_CPY
CH57 0.1U_0402_25V6K~D
CH58 10U_0805_25V6K~D
RH206 @ 0_0603_5%~D
+VCCDPLL_CPY
QH5 AO3413_SOT23-3
40 PCH_VREG_EN#
CH61 1U_0402_6.3V6K~D
+1.05VM_VCCASW
CH64 22U_0805_6.3V6M~D
CH65 22U_0805_6.3V6M~D
RH211 @ 0_0805_5%~D
CH67 1U_0402_6.3V6K~D
CH68 1U_0402_6.3V6K~D
CH69 1U_0402_6.3V6K~D
RH216 @ 0_0805_5%~D +3VS_VCC_CLKF33
CH73 10U_0805_25V6K~D
CH74 1U_0402_6.3V6K~D
CH78 0.1U_0402_25V6K~D
RH220 @ 0_0603_5%~D
CH79 1U_0402_6.3V6K~D
+1.05VS_VCCDIFFCLKN
RH222 @ 0_0603_5%~D
CH81 1U_0402_6.3V6K~D
RH246 @ 0_0603_5%~D
CH96 1U_0402_6.3V6K~D
RH226 @ 0_0603_5%~D
CH85 4.7U_0603_10V6K~D
CH84 0.1U_0402_25V6K~D
RH248 @ 0_0603_5%
CH83 @ 1U_0402_6.3V6K~D
CH86 0.1U_0402_25V6K~D
CH87 0.1U_0402_25V6K~D
CH88 0.1U_0402_25V6K~D
CH89 0.1U_0402_25V6K~D
CH90 1U_0402_6.3V6K~D
LH6 10UH_LBR2012T100M_20%~D
LH7 10UH_LBR2012T100M_20%~D
RH229 @ 0_0805_5%~D +VCCA_DPLL_L
CH94 220U_B2_2.5VM_R35M~D
CH95 220U_B2_2.5VM_R35M~D
CH96 1U_0402_6.3V6K~D
CH93 1U_0402_6.3V6K~D

RH202 @ 0_0603_5%~D +1.05VS_VCCUSBCORE
CH56 1U_0402_6.3V6K~D
RH205 @ 0_0603_5%~D +3V_VCCPUSB
RH207 @ 0_0603_5%~D +3V_VCCAUBG
CH59 0.1U_0402_25V6K~D
CH60 0.1U_0402_25V6K~D
RH209 @ 0_0603_5%~D +1.05VS_VCCAUPLL
CH62 @ 1U_0402_6.3V6K~D +VCCA_USBSUS
RH210 @ 0_0603_5%~D +3V_VCCPSUS_1
CH66 0.1U_0402_25V6K~D
RH212 0_0603_5%~D +3V_VCCPSUS
CH70 1U_0402_6.3V6K~D
RH214 @ 0_0805_5%~D +3VS_VCCPCORE
CH72 0.1U_0402_25V6K~D
RH217 0_0603_5%~D +3VS_VCCPPCI
CH75 0.1U_0402_25V6K~D
RH218 @ 0_0603_5%~D +VCC3_3_2
CH76 0.1U_0402_25V6K~D
RH219 0_0805_5%~D +1.05VS_SATA3
CH77 1U_0402_6.3V6K~D
LH5 10UH_LBR2012T100M_20%~D +VCCSATAPLL_R
RH221 @ 0_0805_5%
CH80 @ 10U_0805_25V6K~D
Place CH80 Near AK1 pin
RH223 0_0805_5%~D +1.05VS_VCC_SATA
CH82 1U_0402_6.3V6K~D
CH91 0.1U_0402_25V6K~D
RH234 @ 150_0402_1%
RH233 @ 0_0603_5%~D

QH4 AO3413_SOT23-3
RH245 @ 0_0603_5%~D +5VALW_PCH
42 PCH_PWR_EN#
C18 0.1U_0402_25V6K~D
R57 20K_0402_5%

RH208 10_0402_1%
DH2 RB751S40T1_SOD523-2~D
+PCH_V5REF_SUS
CH63 0.1U_0603_50V7K~D
RH213 10_0402_1%
DH3 RB751S40T1_SOD523-2~D
+PCH_V5REF_RUN
CH71 1U_0603_25V6-K~D

PROPRIETARY NOTE: THIS SHEET OF ENGINEERING DRAWING AND SPECIFICATIONS CONTAINS CONFIDENTIAL TRADE SECRET AND OTHER PROPRIETARY INFORMATION OF DELL. THIS DOCUMENT MAY NOT BE TRANSFERRED OR COPIED WITHOUT THE EXPRESS WRITTEN AUTHORIZATION OF DELL. IN ADDITION, NEITHER THIS SHEET NOR THE INFORMATION IT CONTAINS WAY BE USED BY OR DISCLOSED TO ANY THIRD PARTY WITHOUT DELL'S EXPRESS WRITTEN CONSENT.

DELL CONFIDENTIAL/PROPRIETARY

Compal Electronics, Inc.

Title: SCHEMATIC M/B LA-8321

Size: | Document Number: 4019H5 | Rev: B

Date: Wednesday, August 01, 2012 | Sheet 22 of 66

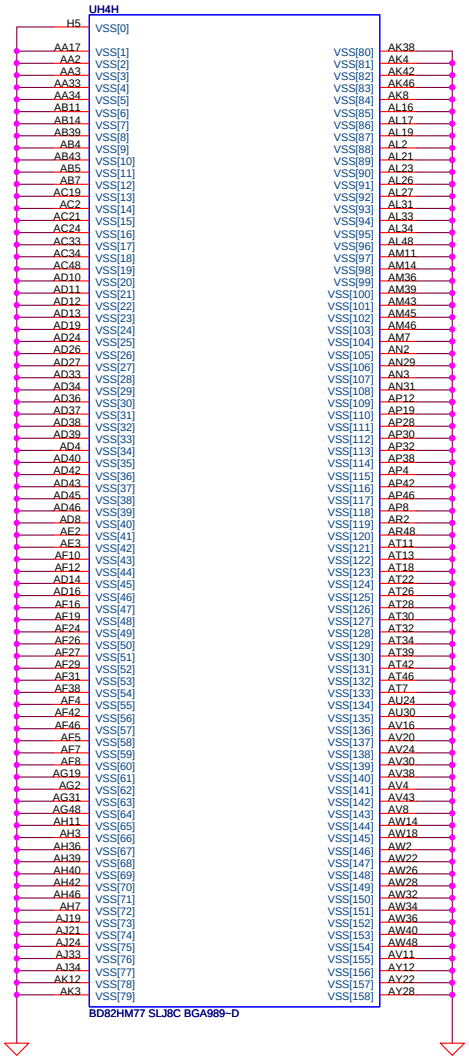

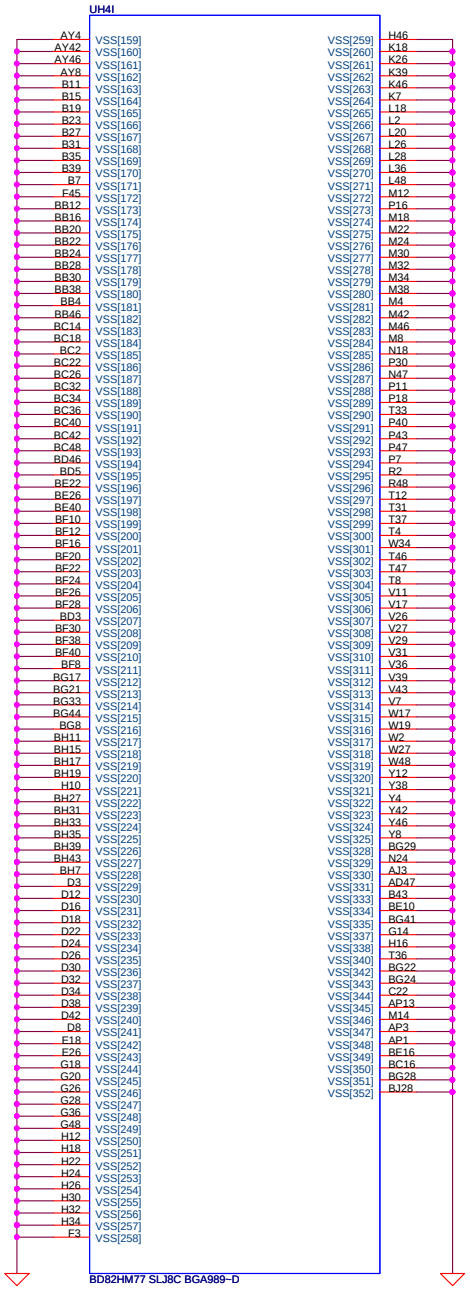

PROPRIETARY NOTE: THIS SHEET OF ENGINEERING DRAWING AND SPECIFICATIONS CONTAINS CONFIDENTIAL TRADE SECRET AND OTHER PROPRIETARY INFORMATION OF DELL. THIS DOCUMENT MAY NOT BE TRANSFERRED OR COPIED WITHOUT THE EXPRESS WRITTEN AUTHORIZATION OF DELL. IN ADDITION, NEITHER THIS SHEET NOR THE INFORMATION IT CONTAINS WAY BE USED BY OR DISCLOSED TO ANY THIRD PARTY WITHOUT DELL'S EXPRESS WRITTEN CONSENT.

DELL CONFIDENTIAL/PROPRIETARY

Compal Electronics, Inc.

Title: SCHEMATIC M/B LA-8321

Size | Document Number: 4019H5 | Rev: B

Date: Wednesday, August 01, 2012 | Sheet 23 of 66

LCD Backlight / PWM Selector

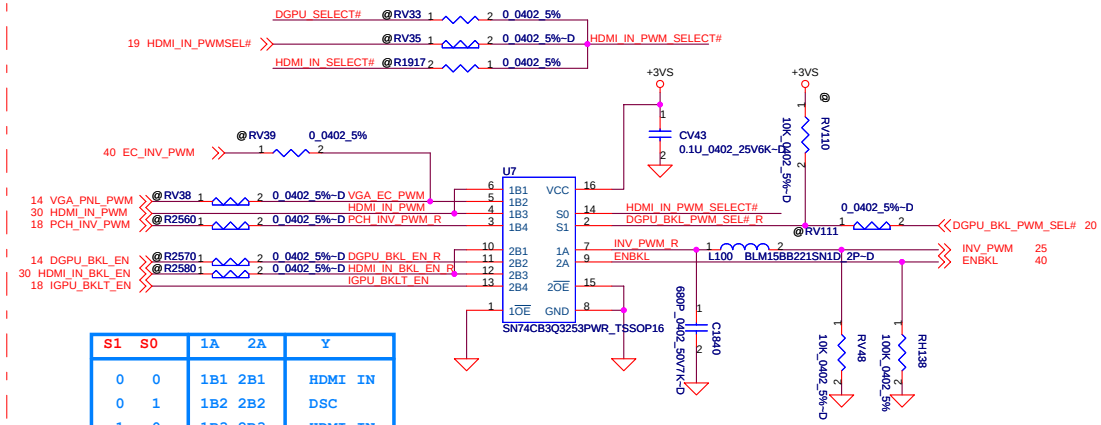

S1	S0	1A 2A	Y
0	0	1B1 2B1	HDMI IN
0	1	1B2 2B2	DSC
1	0	1B3 2B3	HDMI IN
1	1	1B4 2B4	UMA

LCD DDC Selector

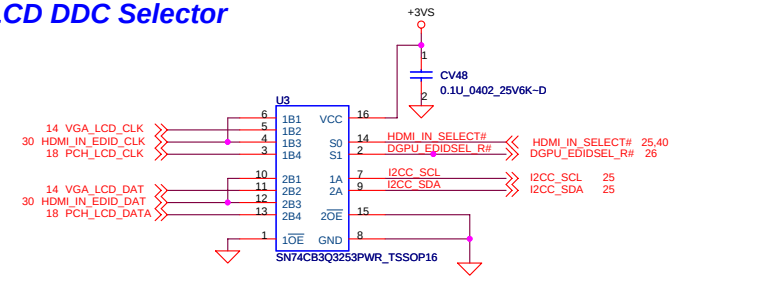

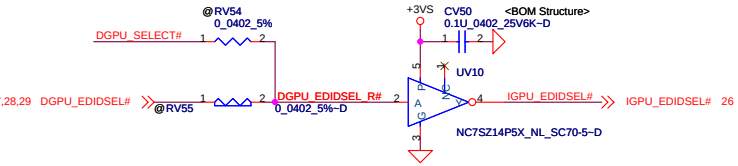

S1	S0	1A 2A	Y
0	0	1B1 2B1	HDMI IN
0	1	1B2 2B2	DSC
1	0	1B3 2B3	HDMI IN
1	1	1B4 2B4	UMA

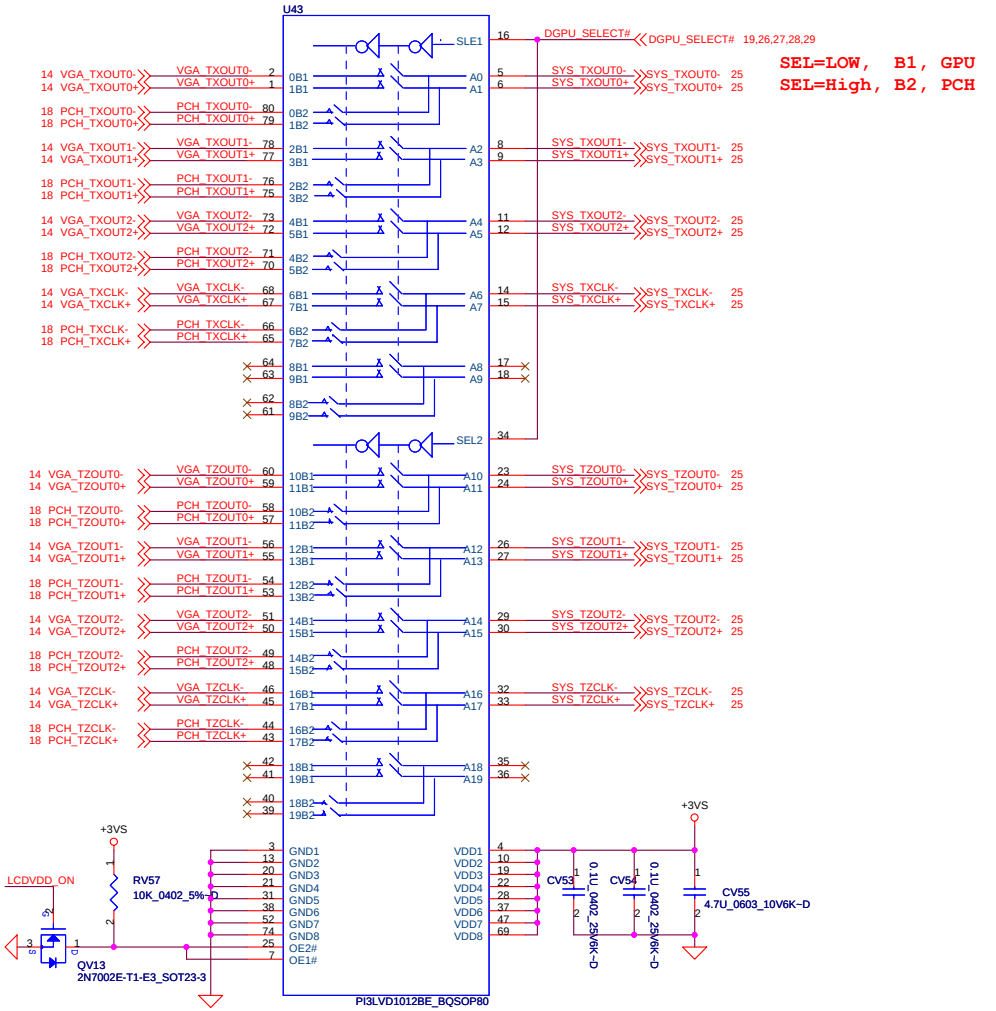

LCD POWER

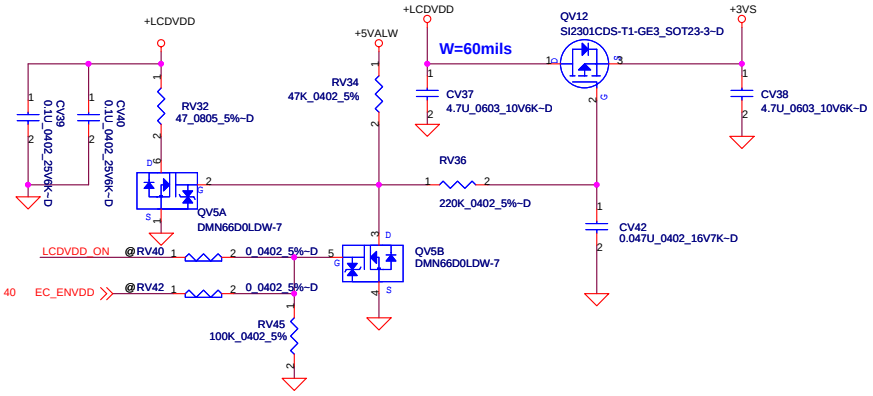

LCD VDD Selector

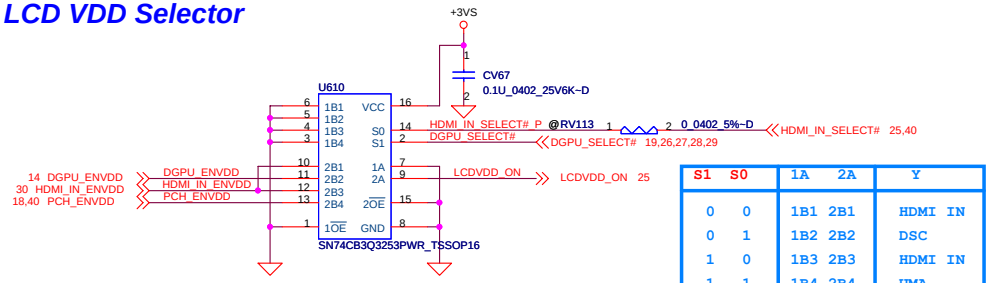

S1	S0	1A 2A	Y
0	0	1B1 2B1	HDMI IN
0	1	1B2 2B2	DSC
1	0	1B3 2B3	HDMI IN
1	1	1B4 2B4	UMA

PROPRIETARY NOTE: THIS SHEET OF ENGINEERING DRAWING AND SPECIFICATIONS CONTAINS CONFIDENTIAL TRADE SECRET AND OTHER PROPRIETARY INFORMATION OF DELL. THIS DOCUMENT MAY NOT BE TRANSFERRED OR COPIED WITHOUT THE EXPRESS WRITTEN AUTHORIZATION OF DELL. IN ADDITION, NEITHER THIS SHEET NOR THE INFORMATION IT CONTAINS WAY BE USED BY OR DISCLOSED TO ANY THIRD PARTY WITHOUT DELL'S EXPRESS WRITTEN CONSENT.

DELL CONFIDENTIAL/PROPRIETARY

Compal Electronics, Inc.

Title: SCHEMATIC M/B LA-8321

Size | Document Number: 4019H5 | Rev: B

Date: Wednesday, August 01, 2012 | Sheet 24 of 66

SEL=LOW : B1, HDMI IN
SEL=High: B2, SYSTEM

+3VS
@RV62
10K_0402_5%~D
HDMI_IN_SELECT#
HDMI_IN_SELECT# 24,40

U46
SLE1
SEL2
PI3LVD1012BE_BQSOP80

30 LVDS_SW_TXOUT0-
30 LVDS_SW_TXOUT0+
24 SYS_TXOUT0-
24 SYS_TXOUT0+
30 LVDS_SW_TXOUT1-
30 LVDS_SW_TXOUT1+
24 SYS_TXOUT1-
24 SYS_TXOUT1+
30 LVDS_SW_TXOUT2-
30 LVDS_SW_TXOUT2+
24 SYS_TXOUT2-
24 SYS_TXOUT2+
30 LVDS_SW_TXCLK-
30 LVDS_SW_TXCLK+
24 SYS_TXCLK-
24 SYS_TXCLK+
30 LVDS_SW_TZOUT0-
30 LVDS_SW_TZOUT0+
24 SYS_TZOUT0-
24 SYS_TZOUT0+
30 LVDS_SW_TZOUT1-
30 LVDS_SW_TZOUT1+
24 SYS_TZOUT1-
24 SYS_TZOUT1+
30 LVDS_SW_TZOUT2-
30 LVDS_SW_TZOUT2+
24 SYS_TZOUT2-
24 SYS_TZOUT2+
30 LVDS_SW_TZCLK-
30 LVDS_SW_TZCLK+
24 SYS_TZCLK-
24 SYS_TZCLK+

TXOUT0-
TXOUT0+
TXOUT1-
TXOUT1+
TXOUT2-
TXOUT2+
TXCLK-
TXCLK+
TZOUT0-
TZOUT0+
TZOUT1-
TZOUT1+
TZOUT2-
TZOUT2+
TZCLK-
TZCLK+

+3VS_SWITCH
RV60
0_0603_5%~D
@
CV58
4.7U_0603_10V6K~D
CV59
CV60
0.1U_0402_25V6K~D

24 LCDVDD_ON
+3VS
RV58
10K_0402_5%~D
QV14
2N7002E-T1-E3_SOT23-3

Camera Power Control

+3VS
Q1
AO3413_SOT23-3
+3VS_CAM
C1747
0.1U_0402_25V6K~D
R1644
100K_0402_5%
C1851
0.1U_0402_25V6K~D
40 EN_CAM
Q11
2N7002E-T1-E3_SOT23-3

LCD Backlight Control

B+
Q45
FDC654P-G_SSOT-6~D
80 mil
80 mil
+INVPWR_B+
C346
1000P_0402_50V7K~D
R422
100K_0402_5%
C340
0.1U_0603_50V7K~D
PWR_SRC_ON
Q44
SSM3K7002FU_SC70-3~D
R423
47K_0402_5%
40 LCD_BKL_EN
LCD_BKL_EN

LVDS Connector

B+
@LV9
FBMA-L11-201209-221LMA30T_0805
W=60mils
+INVPWR_B+
C1852
0.1U_0402_25V6K~D
JLVDS
+3VS
CV45
0.1U_0402_25V6K~D
+LCDVDD
CV47
CV46
10U_0805_25V6K~D
W=60mils
INV_PWM
BKOFF#
D73
SDMK0340L-7-F_SOD323-2~D
R1918
10K_0402_5%~D
I2CC_SCL
I2CC_SDA
D61
IP4223CZ6_SO6-6
DMIC_CLK
+5VS
DMIC0
V I/O
V BUS Ground
USB20_CMOS_N12
USB20_CMOS_P12
Carmer
@RV10
@RV51
0_0402_5%
+3VS_CAM
CAM_DET#
LVDS_CAB_DET#
LCD_TEST
L101
WCM2012F2S-900T04_0805
JAE_FI-TD44SB-VF93-R750~D
CONN@

PROPRIETARY NOTE: THIS SHEET OF ENGINEERING DRAWING AND SPECIFICATIONS CONTAINS CONFIDENTIAL TRADE SECRET AND OTHER PROPRIETARY INFORMATION OF DELL. THIS DOCUMENT MAY NOT BE TRANSFERRED OR COPIED WITHOUT THE EXPRESS WRITTEN AUTHORIZATION OF DELL. IN ADDITION, NEITHER THIS SHEET NOR THE INFORMATION IT CONTAINS WAY BE USED BY OR DISCLOSED TO ANY THIRD PARTY WITHOUT DELL'S EXPRESS WRITTEN CONSENT.

DELL CONFIDENTIAL/PROPRIETARY

Compal Electronics, Inc.

Title: SCHEMATIC M/B LA-8321

Size | Document Number: 4019H5 | Rev: B

Date: Wednesday, August 01, 2012 | Sheet 25 of 66

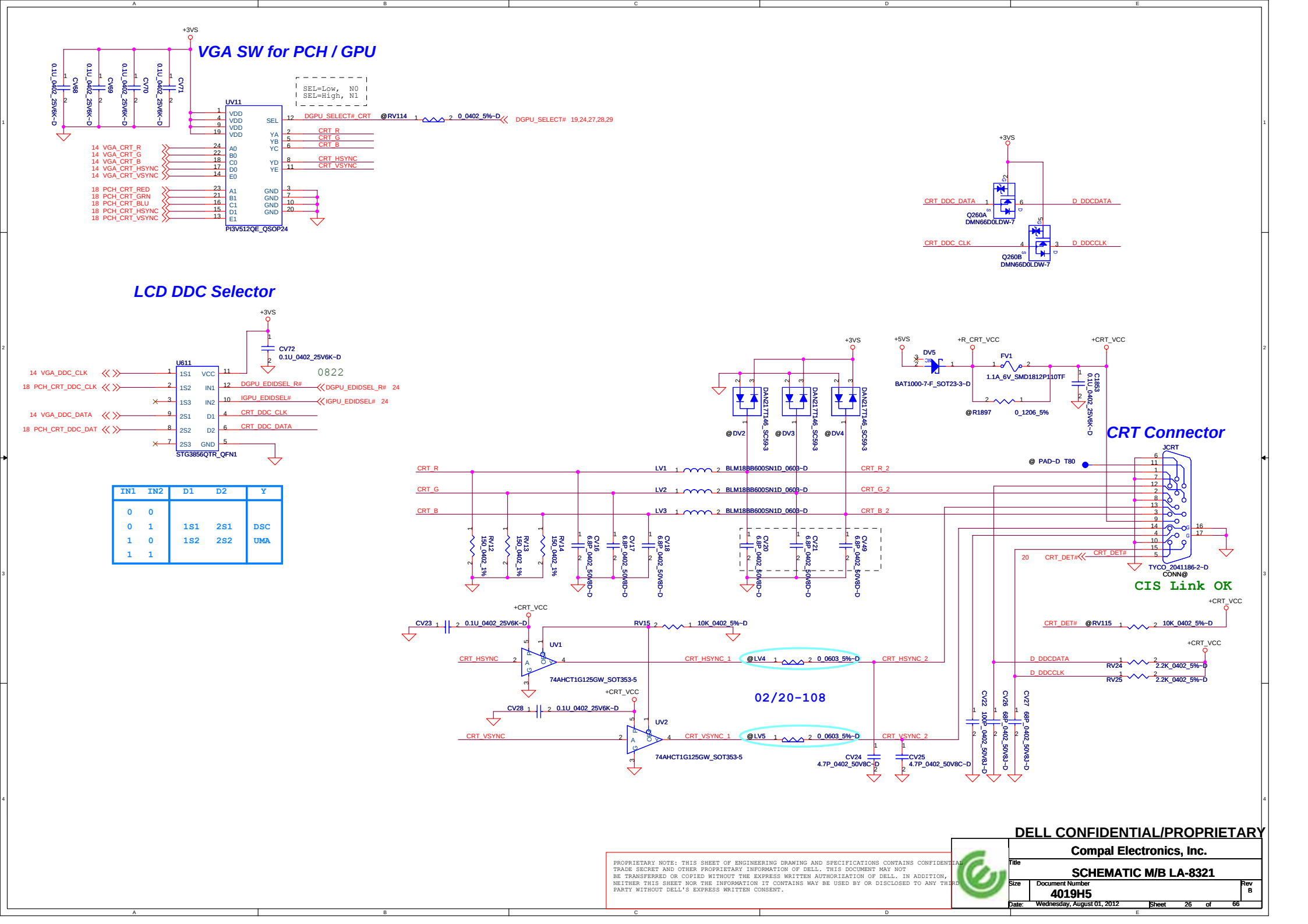

PROPRIETARY NOTE: THIS SHEET OF ENGINEERING DRAWING AND SPECIFICATIONS CONTAINS CONFIDENTIAL TRADE SECRET AND OTHER PROPRIETARY INFORMATION OF DELL. THIS DOCUMENT MAY NOT BE TRANSFERRED OR COPIED WITHOUT THE EXPRESS WRITTEN AUTHORIZATION OF DELL. IN ADDITION, NEITHER THIS SHEET NOR THE INFORMATION IT CONTAINS WAY BE USED BY OR DISCLOSED TO ANY THIRD PARTY WITHOUT DELL'S EXPRESS WRITTEN CONSENT.

DELL CONFIDENTIAL/PROPRIETARY

Compal Electronics, Inc.	
Title	SCHEMATIC M/B LA-8321
Size	Document Number 4019H5 Rev B
Date: Wednesday, August 01, 2012	Sheet 26 of 66

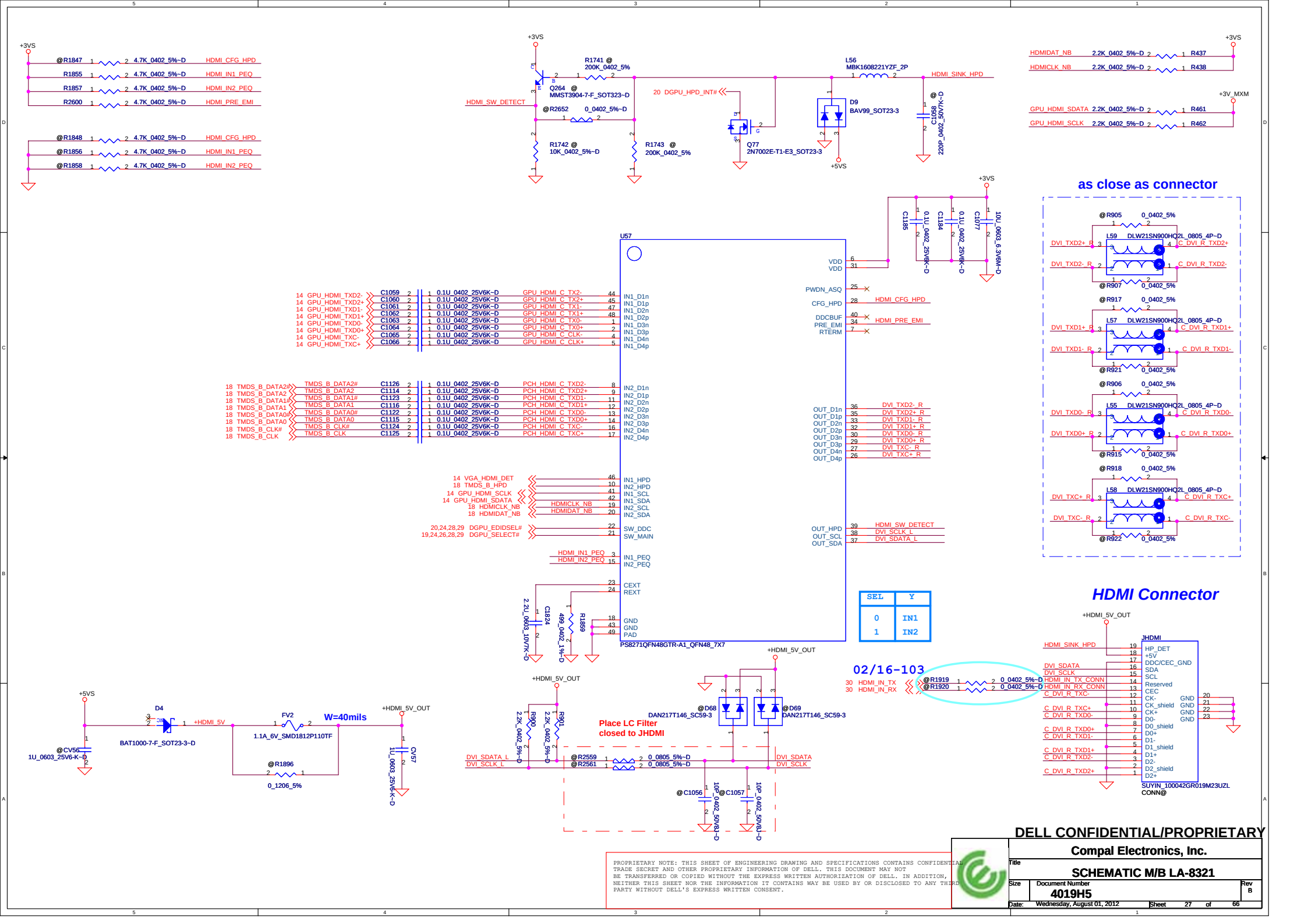

DELL CONFIDENTIAL/PROPRIETARY

PROPRIETARY NOTE: THIS SHEET OF ENGINEERING DRAWING AND SPECIFICATIONS CONTAINS CONFIDENTIAL TRADE SECRET AND OTHER PROPRIETARY INFORMATION OF DELL. THIS DOCUMENT MAY NOT BE TRANSFERRED OR COPIED WITHOUT THE EXPRESS WRITTEN AUTHORIZATION OF DELL. IN ADDITION, NEITHER THIS SHEET NOR THE INFORMATION IT CONTAINS WAY BE USED BY OR DISCLOSED TO ANY THIRD PARTY WITHOUT DELL'S EXPRESS WRITTEN CONSENT.

Compal Electronics, Inc.	
Title	SCHEMATIC M/B LA-8321
Size	Document Number 4019H5 Rev B
Date: Wednesday, August 01, 2012	Sheet 27 of 66

PCH/GPU AUX&LANE SW

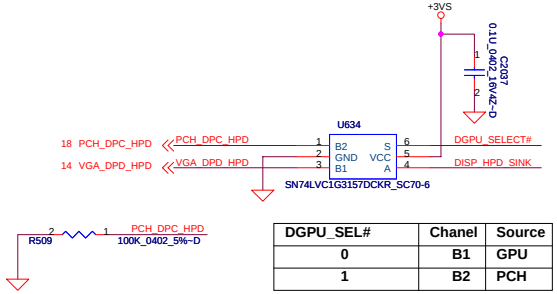

DGPU_SEL#	Chanel	Source
0	B1	GPU
1	B2	PCH

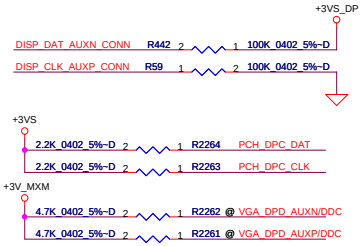

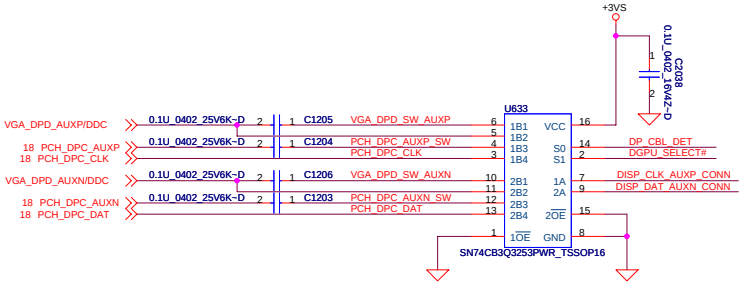

S1	S0	1A 2A	Y
0	0	1B1 2B1	MXM_AUX
0	1	1B2 2B2	MXM_DDC
1	0	1B3 2B3	PCH_AUX
1	1	1B4 2B4	PCH_DDC

For ATI/Nvidia GPU

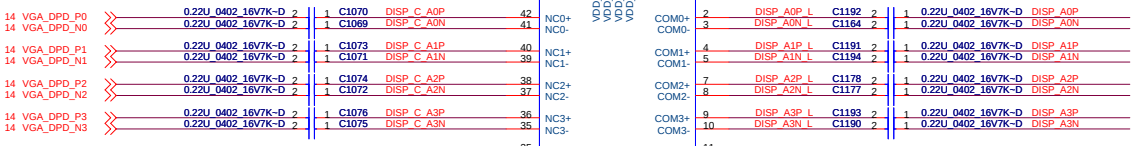

For Intel PCH

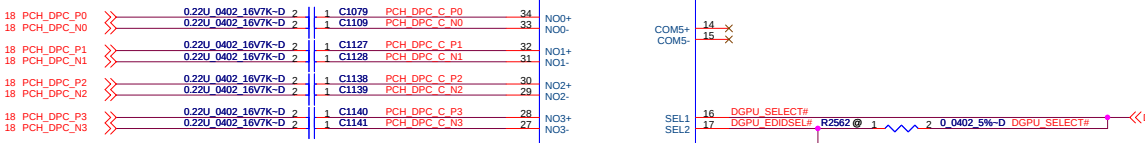

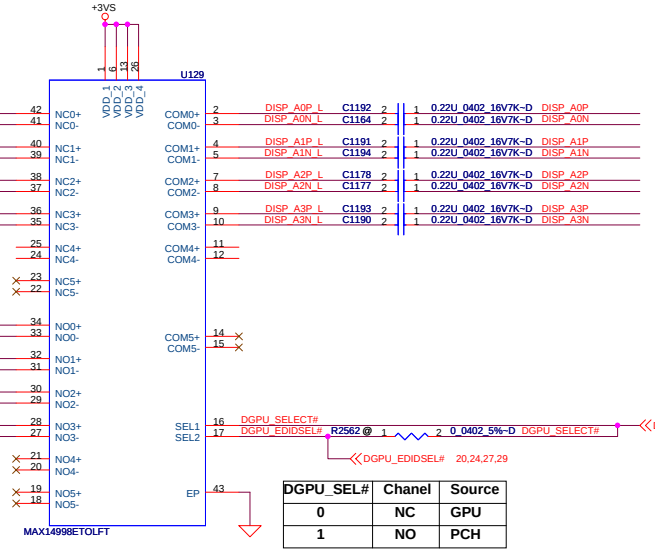

DGPU_SEL#	Chanel	Source
0	NC	GPU
1	NO	PCH

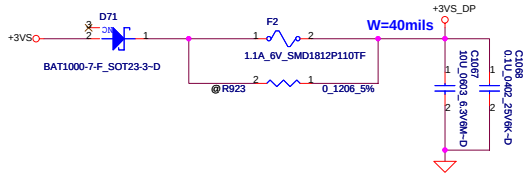

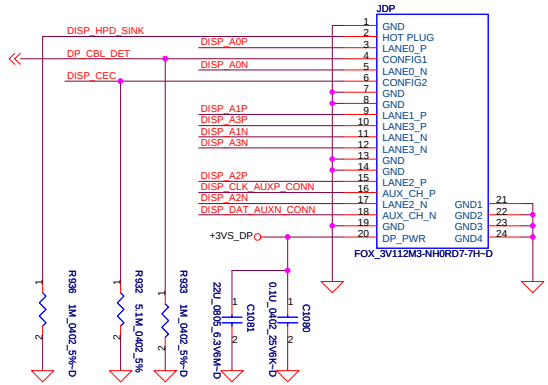

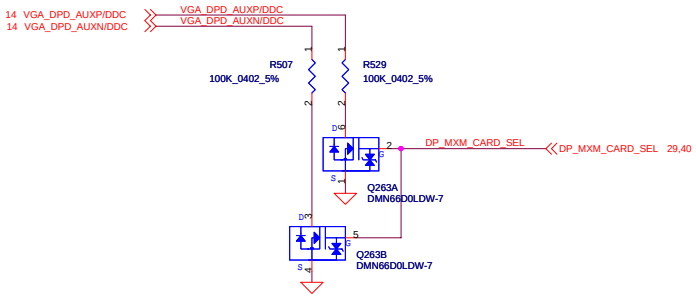

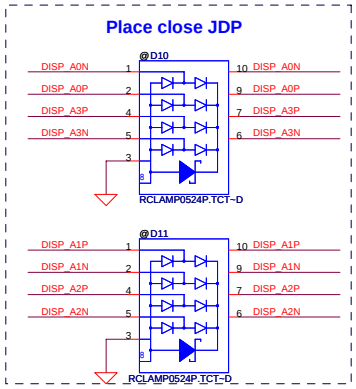

PROPRIETARY NOTE: THIS SHEET OF ENGINEERING DRAWING AND SPECIFICATIONS CONTAINS CONFIDENTIAL TRADE SECRET AND OTHER PROPRIETARY INFORMATION OF DELL. THIS DOCUMENT MAY NOT BE TRANSFERRED OR COPIED WITHOUT THE EXPRESS WRITTEN AUTHORIZATION OF DELL. IN ADDITION, NEITHER THIS SHEET NOR THE INFORMATION IT CONTAINS WAY BE USED BY OR DISCLOSED TO ANY THIRD PARTY WITHOUT DELL'S EXPRESS WRITTEN CONSENT.

DELL CONFIDENTIAL/PROPRIETARY

Compal Electronics, Inc.

Title: SCHEMATIC M/B LA-8321

Size: | Document Number: 4019H5 | Rev: B

Date: Wednesday, August 01, 2012 | Sheet 28 of 66

PCH/GPU AUX&LANE SW for DMC

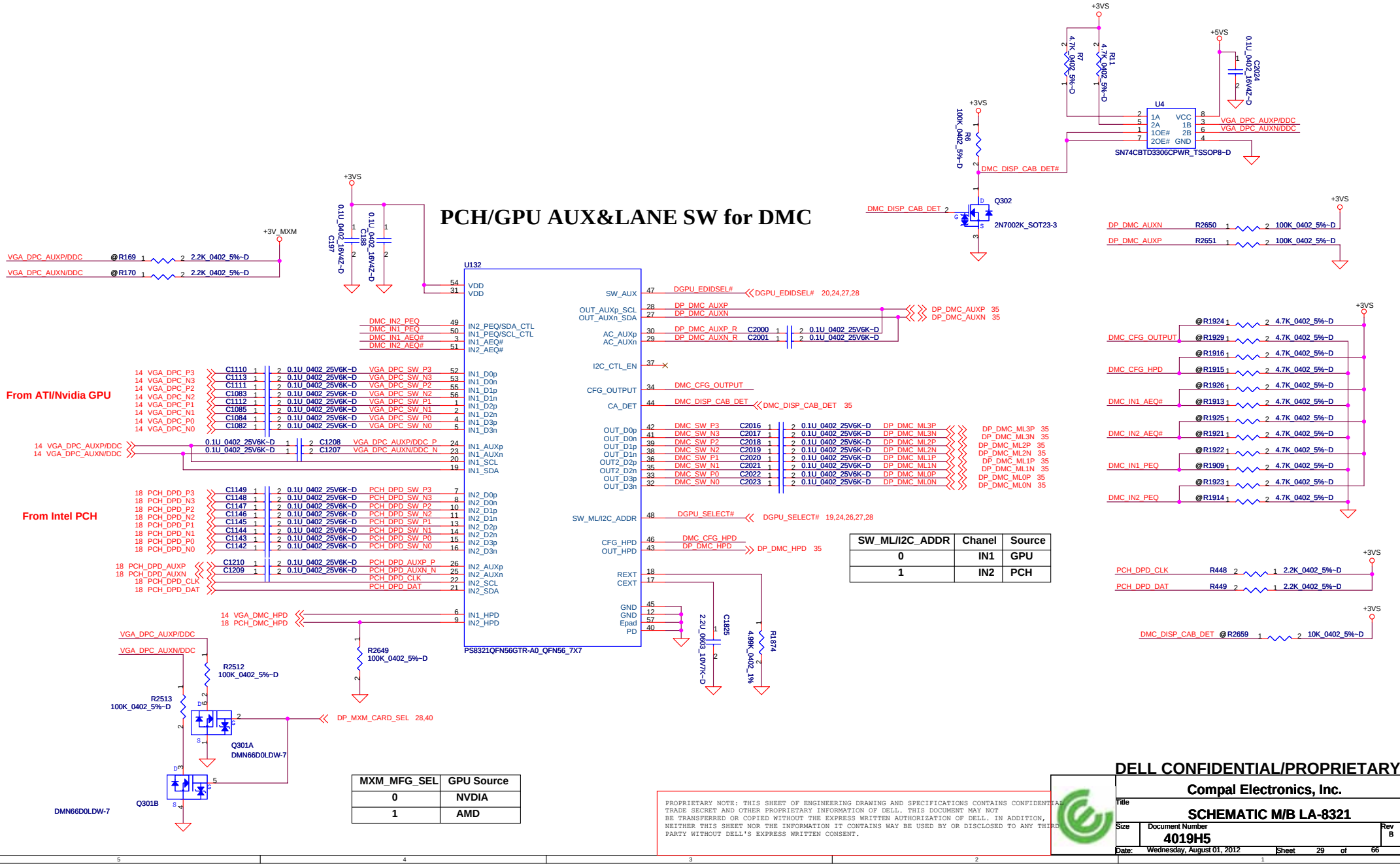

SW_ML/I2C_ADDR	Chanel	Source
0	IN1	GPU
1	IN2	PCH

MXM_MFG_SEL	GPU Source
0	NVDIA
1	AMD

PROPRIETARY NOTE: THIS SHEET OF ENGINEERING DRAWING AND SPECIFICATIONS CONTAINS CONFIDENTIAL TRADE SECRET AND OTHER PROPRIETARY INFORMATION OF DELL. THIS DOCUMENT MAY NOT BE TRANSFERRED OR COPIED WITHOUT THE EXPRESS WRITTEN AUTHORIZATION OF DELL. IN ADDITION, NEITHER THIS SHEET NOR THE INFORMATION IT CONTAINS WAY BE USED BY OR DISCLOSED TO ANY THIRD PARTY WITHOUT DELL'S EXPRESS WRITTEN CONSENT.

DELL CONFIDENTIAL/PROPRIETARY

Compal Electronics, Inc.

Title: SCHEMATIC M/B LA-8321

Size: | Document Number: 4019H5 | Rev: B

Date: Wednesday, August 01, 2012 | Sheet 29 of 66

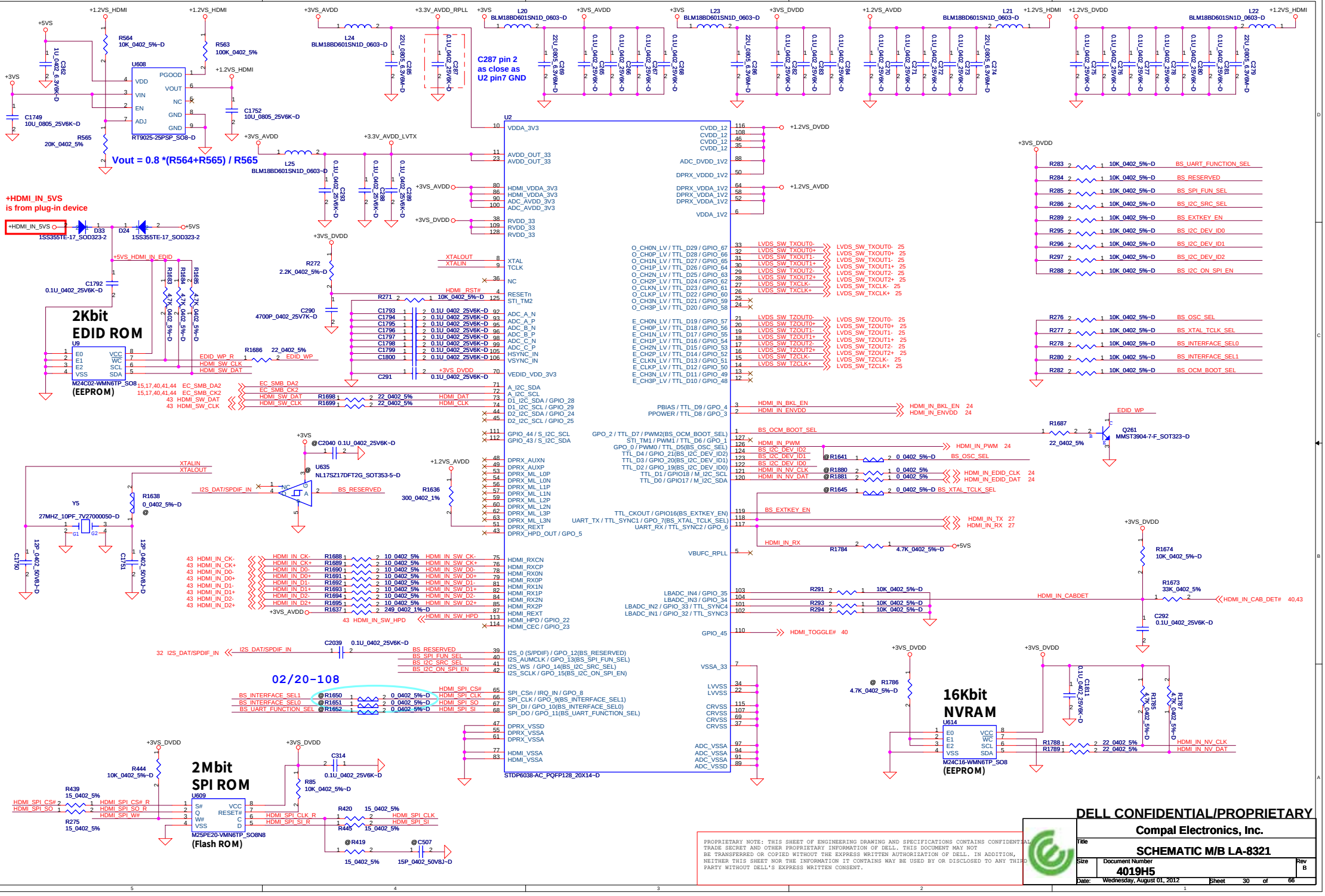
Vout = 0.8 *(R564+R565) / R565
+HDMI_IN_5VS
is from plug-in device
2Kbit
EDID ROM
(EEPROM)
2Mbit
SPI ROM
(Flash ROM)
16Kbit
NVRAM
(EEPROM)
C287 pin 2
as close as
U2 pin7 GND
02/20-108
DELL CONFIDENTIAL/PROPRIETARY
Compal Electronics, Inc.
SCHEMATIC M/B LA-8321
4019H5
Wednesday, August 01, 2012

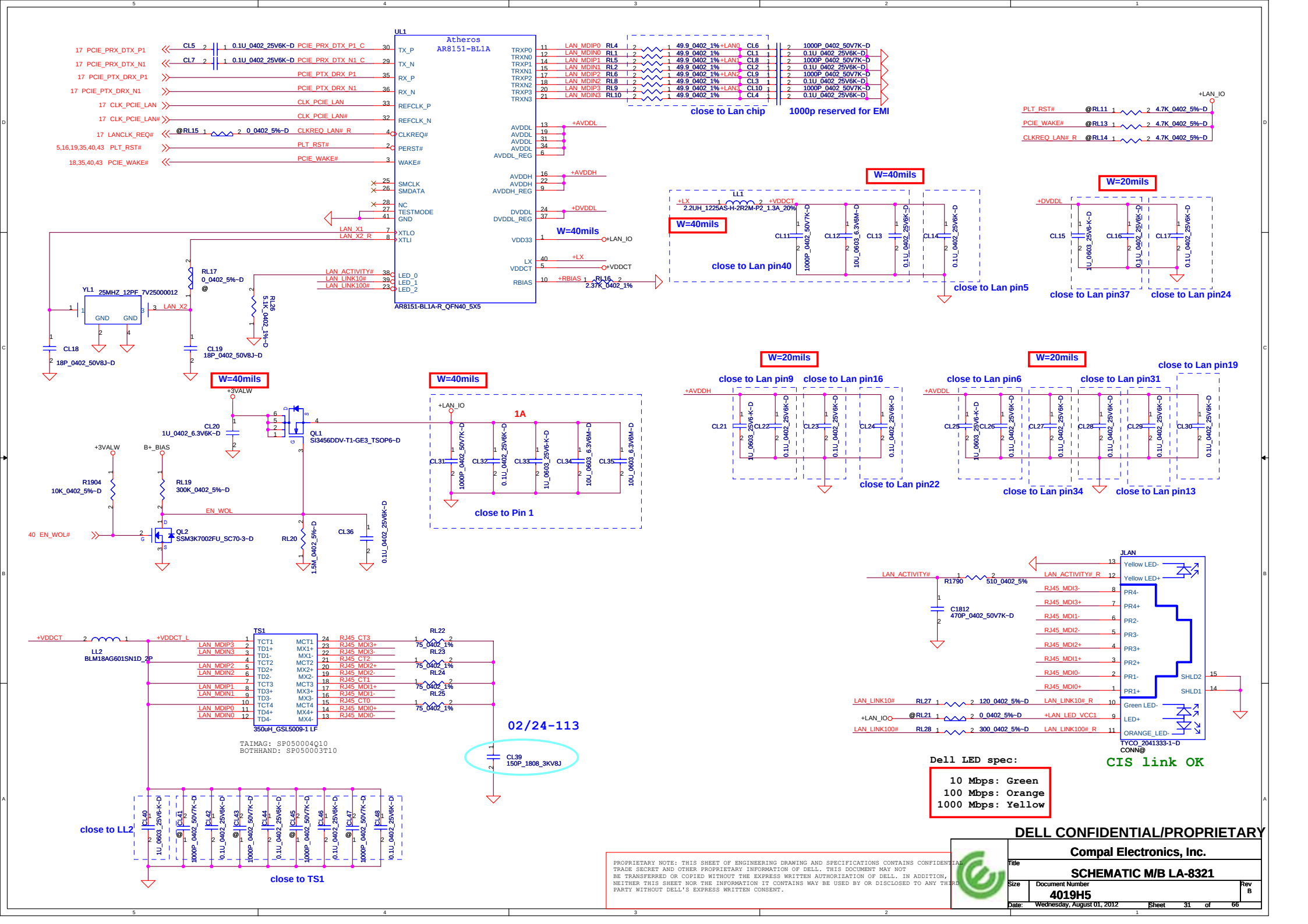
UL1
Atheros
AR8151-BL1A
AR8151-BL1A-R_QFN40_5X5
close to Lan chip
1000p reserved for EMI
W=40mils
W=20mils
close to Lan pin40
close to Lan pin5
close to Lan pin37
close to Lan pin24
close to Lan pin9
close to Lan pin16
close to Lan pin22
close to Lan pin6
close to Lan pin31
close to Lan pin34
close to Lan pin13
close to Lan pin19
close to Pin 1
close to LL2
close to TS1
02/24-113
TAIMAG: SP050004Q10
BOTHHAND: SP050003T10
Dell LED spec:
10 Mbps: Green
100 Mbps: Orange
1000 Mbps: Yellow
CIS link OK
DELL CONFIDENTIAL/PROPRIETARY
Compal Electronics, Inc.
SCHEMATIC M/B LA-8321
4019H5
Wednesday, August 01, 2012
Sheet 31 of 66

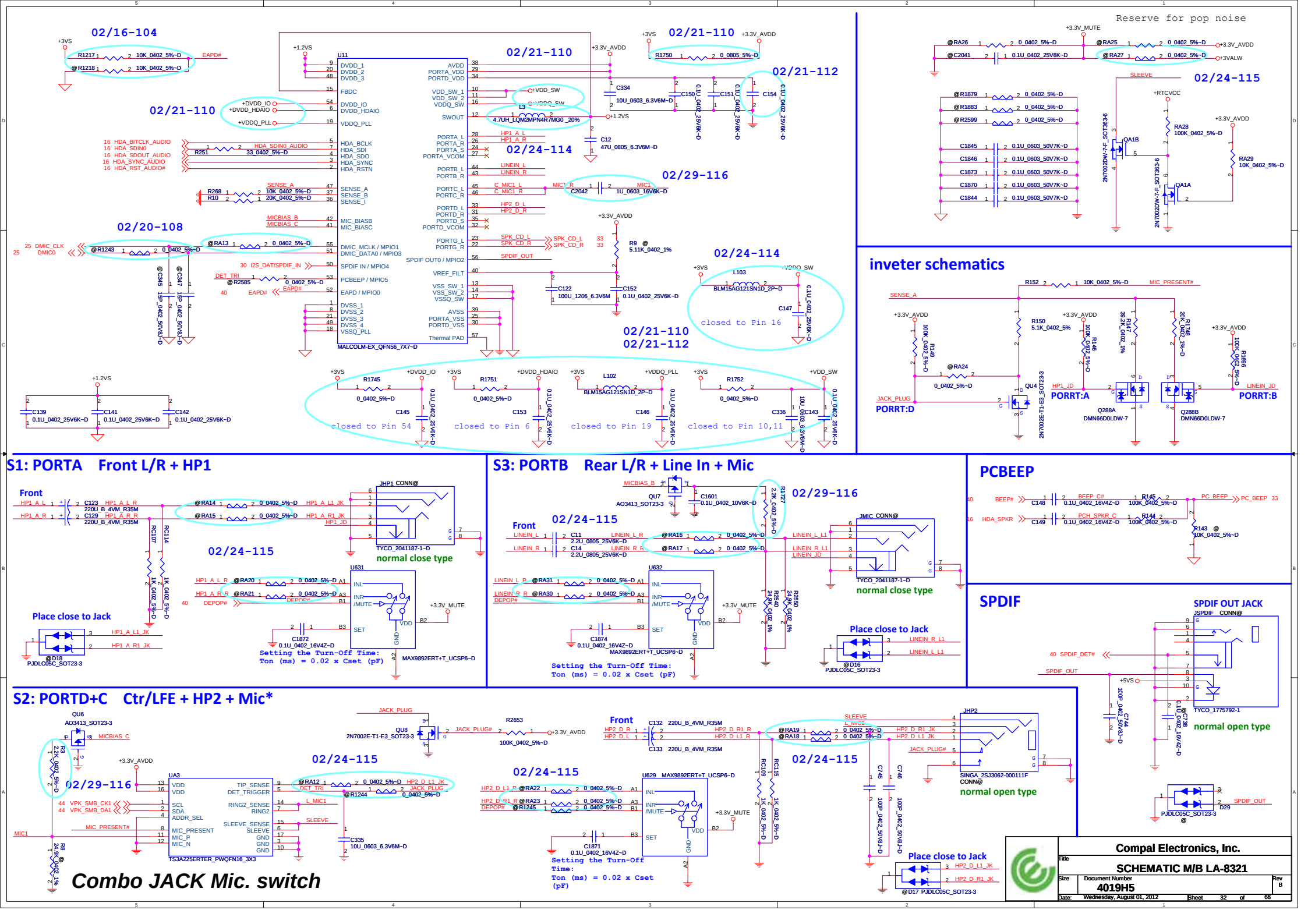
02/16-104
02/21-110
02/21-112
02/24-114
02/29-116
02/20-108
02/24-115
U11
MALCOLM-EX_QFN56_7X7~D
Reserve for pop noise
inveter schematics
PORRT:D
PORRT:A
PORRT:B
closed to Pin 16
closed to Pin 54
closed to Pin 6
closed to Pin 19
closed to Pin 10,11
S1: PORTA Front L/R + HP1
Front
normal close type
Place close to Jack
Setting the Turn-Off Time:
Ton (ms) = 0.02 x Cset (pF)
S3: PORTB Rear L/R + Line In + Mic
PCBEEP
SPDIF
SPDIF OUT JACK
normal open type
S2: PORTD+C Ctr/LFE + HP2 + Mic*
Combo JACK Mic. switch
Compal Electronics, Inc.
SCHEMATIC M/B LA-8321
4019H5
Wednesday, August 01, 2012

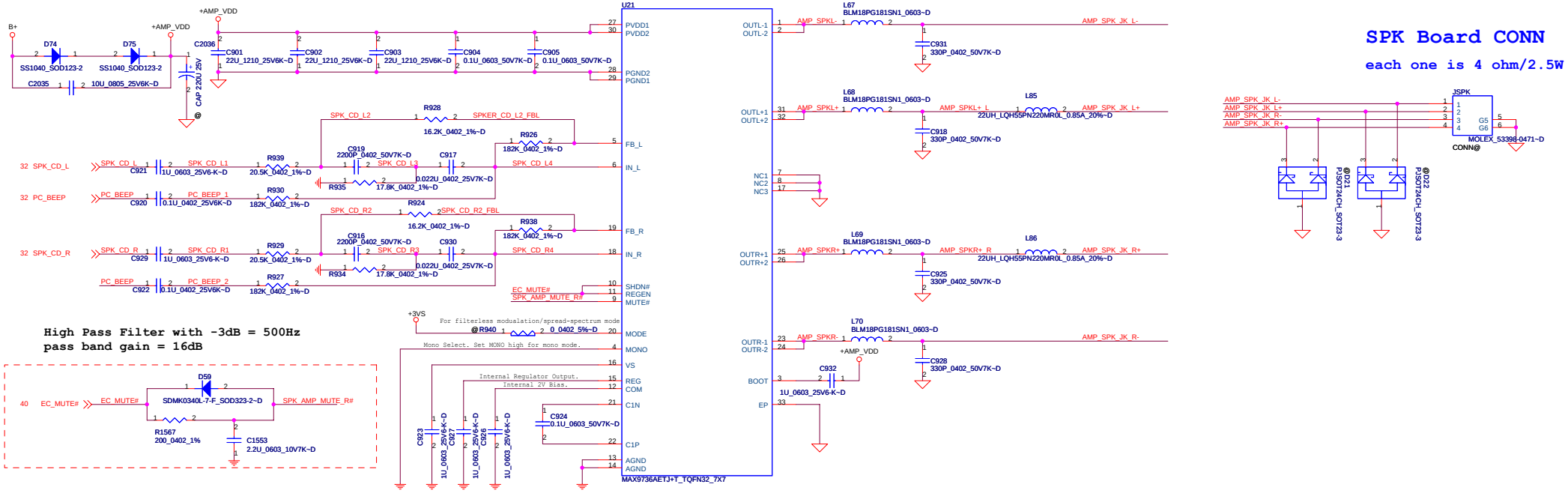

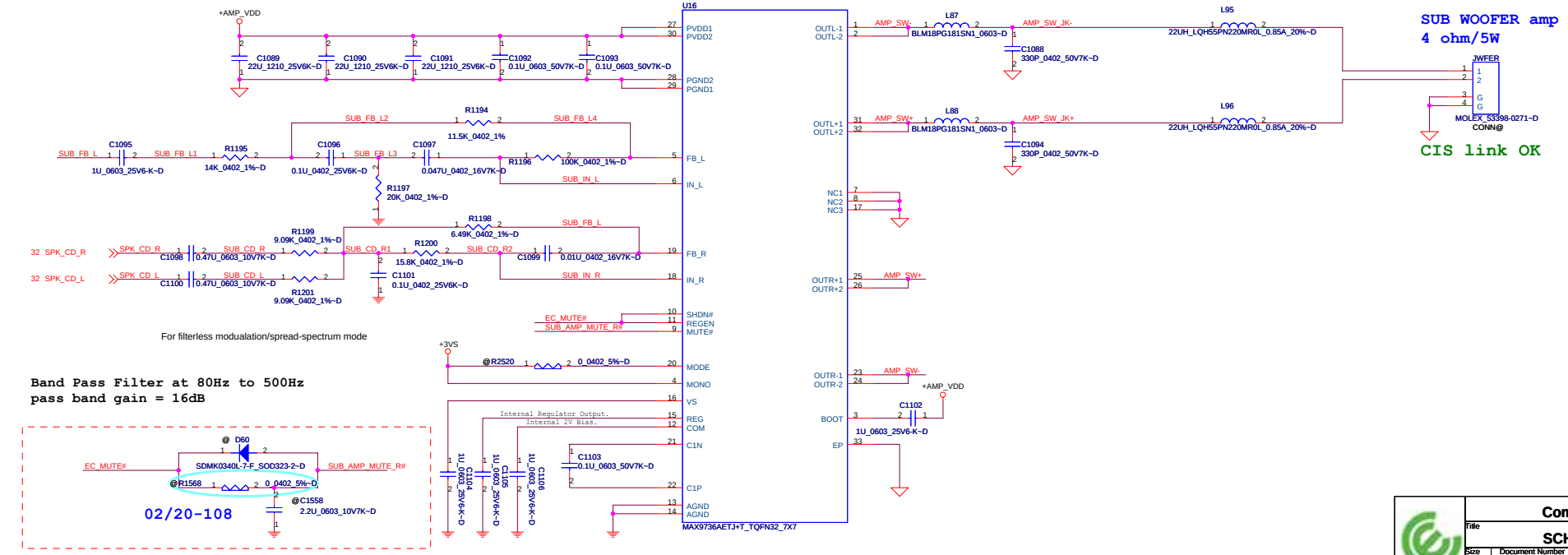

Compal Electronics, Inc.		
Title: SCHEMATIC M/B LA-8321		
Size	Document Number: 4019H5	Rev: B
Date: Wednesday, August 01, 2012	Sheet 33 of 66	

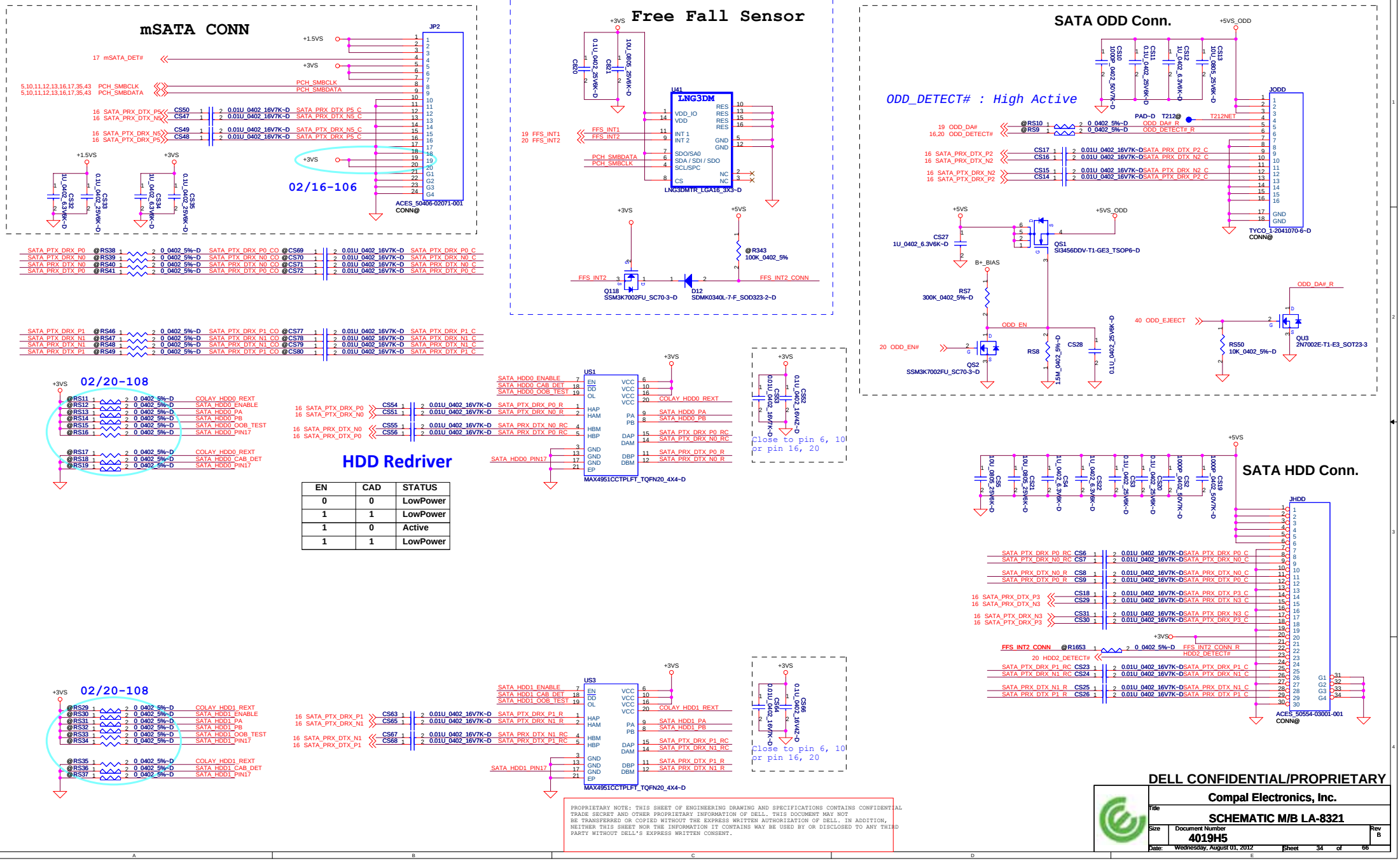

EN	CAD	STATUS
0	0	LowPower
1	1	LowPower
1	0	Active
1	1	LowPower

PROPRIETARY NOTE: THIS SHEET OF ENGINEERING DRAWING AND SPECIFICATIONS CONTAINS CONFIDENTIAL TRADE SECRET AND OTHER PROPRIETARY INFORMATION OF DELL. THIS DOCUMENT MAY NOT BE TRANSFERRED OR COPIED WITHOUT THE EXPRESS WRITTEN AUTHORIZATION OF DELL. IN ADDITION, NEITHER THIS SHEET NOR THE INFORMATION IT CONTAINS WAY BE USED BY OR DISCLOSED TO ANY THIRD PARTY WITHOUT DELL'S EXPRESS WRITTEN CONSENT.

DELL CONFIDENTIAL/PROPRIETARY

Compal Electronics, Inc.

Title: SCHEMATIC M/B LA-8321

Size: — Document Number: 4019H5 — Rev: B

Date: Wednesday, August 01, 2012 — Sheet 34 of 66

Wireless LAN

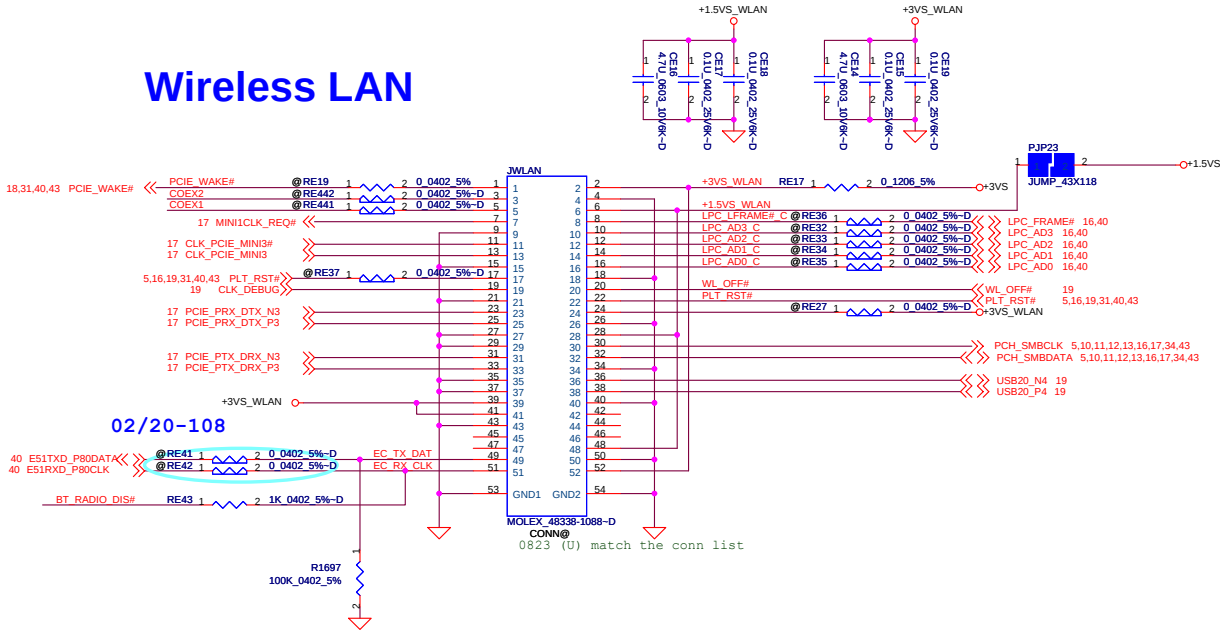

Display Mini Card

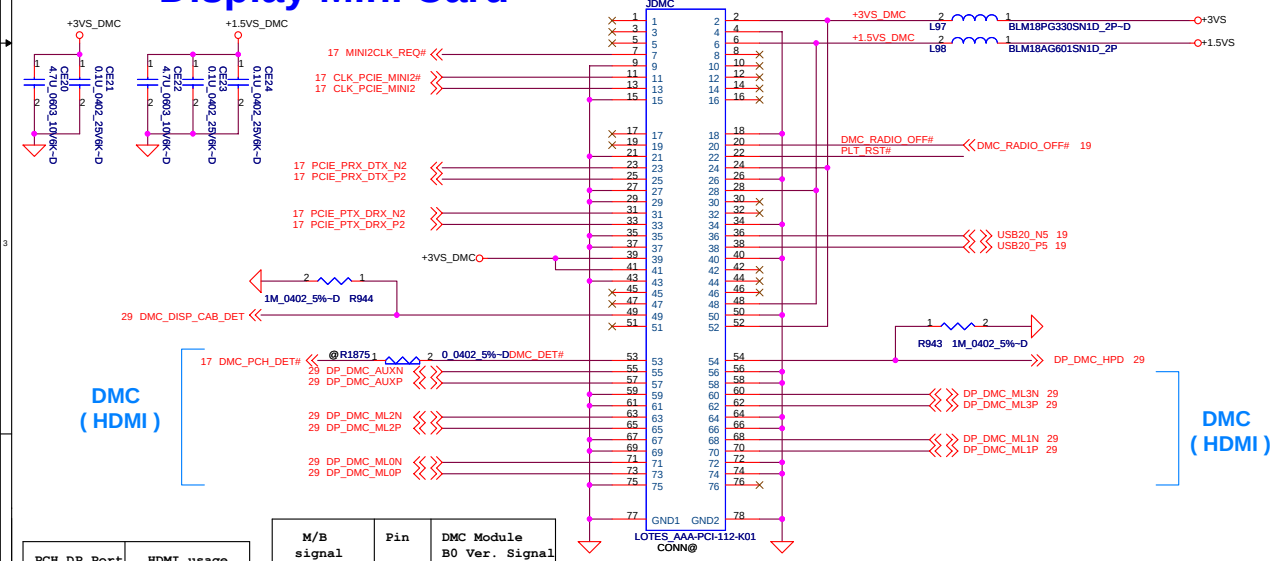

PCH DP Port	HDMI usage
DDP 0P	TMDS DATA 2
DDP 0N	TMDS DATA 2#
DDP 1P	TMDS DATA 1
DDP 1N	TMDS DATA 1#
DDP 2P	TMDS DATA 0
DDP 2N	TMDS DATA 0#
DDP 3P	TMDS CLK
DDP 3N	TMDS CLK#
DDP AUXP	HDMI_CTRL_CLK
DDP AUXN	HDMI_CTRL_DAT

M/B signal	Pin	DMC Module B0 Ver. Signal
DP_DMC_ML3N	60	DMC_CKN
DP_DMC_ML3P	62	DMC_CKP
DP_DMC_ML2N	63	DMC_D0N
DP_DMC_ML2P	65	DMC_D0P
DP_DMC_ML1N	68	DMC_D1N
DP_DMC_ML1P	70	DMC_D1P
DP_DMC_ML0N	71	DMC_D2N
DP_DMC_ML0P	73	DMC_D2P
DP_DMC_AUXN	55	DMC_DDC_DAT
DP_DMC_AUXP	57	DMC_DDC_CLK

BlueTooth

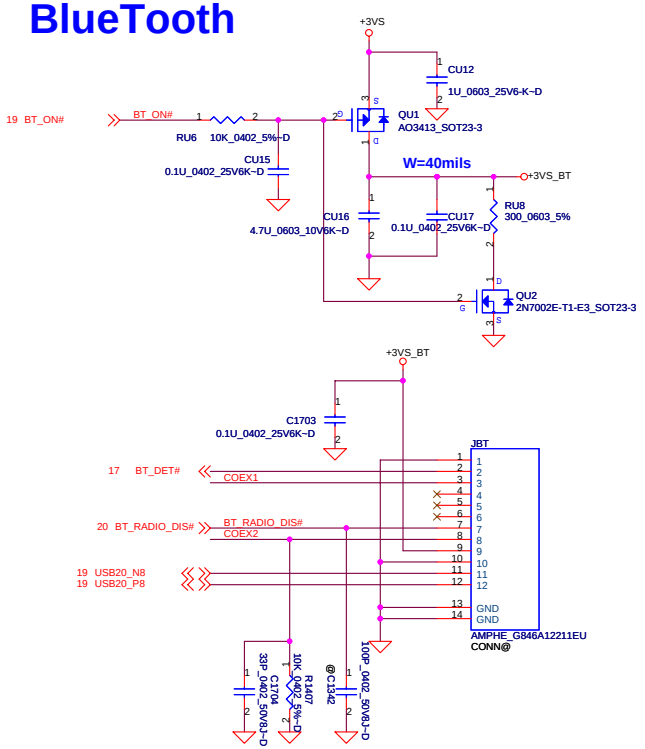

DELL CONFIDENTIAL/PROPRIETARY

PROPRIETARY NOTE: THIS SHEET OF ENGINEERING DRAWING AND SPECIFICATIONS CONTAINS CONFIDENTIAL TRADE SECRET AND OTHER PROPRIETARY INFORMATION OF DELL. THIS DOCUMENT MAY NOT BE TRANSFERRED OR COPIED WITHOUT THE EXPRESS WRITTEN AUTHORIZATION OF DELL. IN ADDITION, NEITHER THIS SHEET NOR THE INFORMATION IT CONTAINS WAY BE USED BY OR DISCLOSED TO ANY THIRD PARTY WITHOUT DELL'S EXPRESS WRITTEN CONSENT.

Compal Electronics, Inc.

Title: SCHEMATIC M/B LA-8321

Size | Document Number: 4019H5 | Rev: B

Date: Wednesday, August 01, 2012 | Sheet 35 of 66

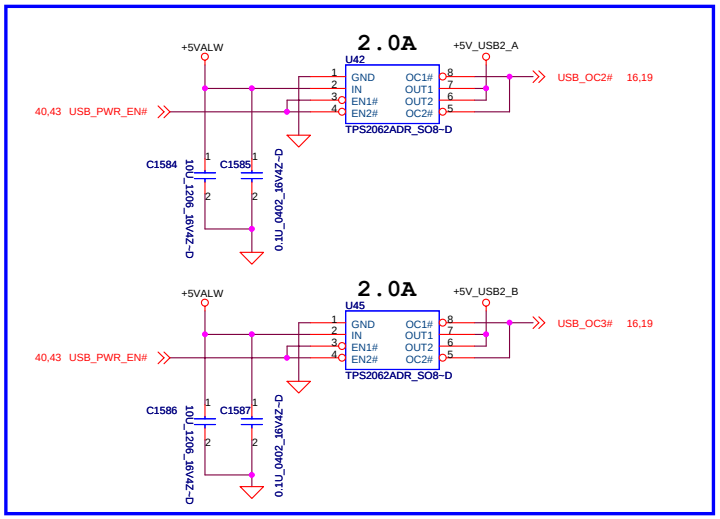

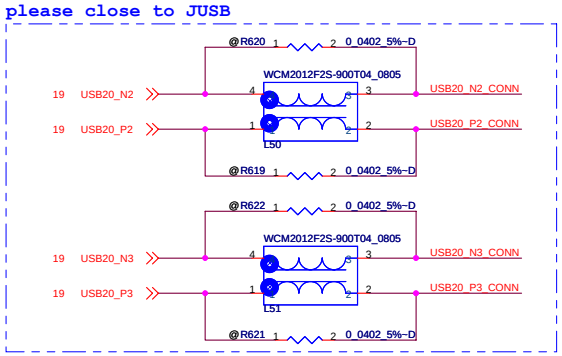

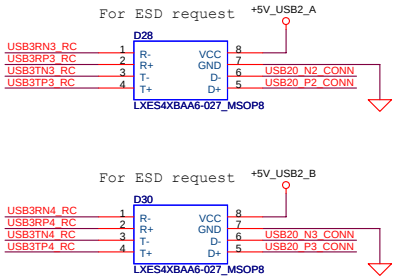

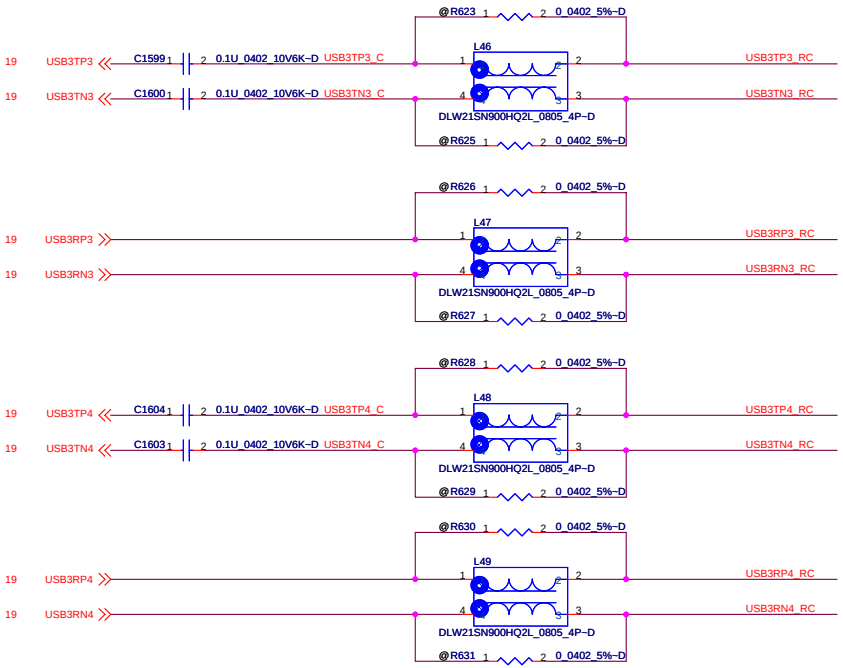

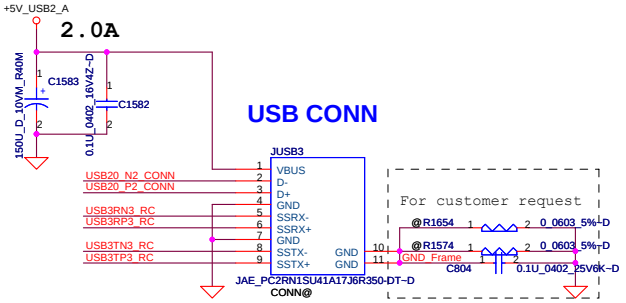

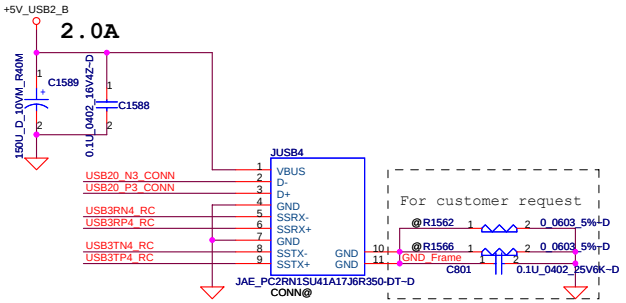

Compal Electronics, Inc.		
Title: SCHEMATIC M/B LA-8321		
Size	Document Number: 4019H5	Rev: B
Date: Wednesday, August 01, 2012	Sheet 36 of 66	

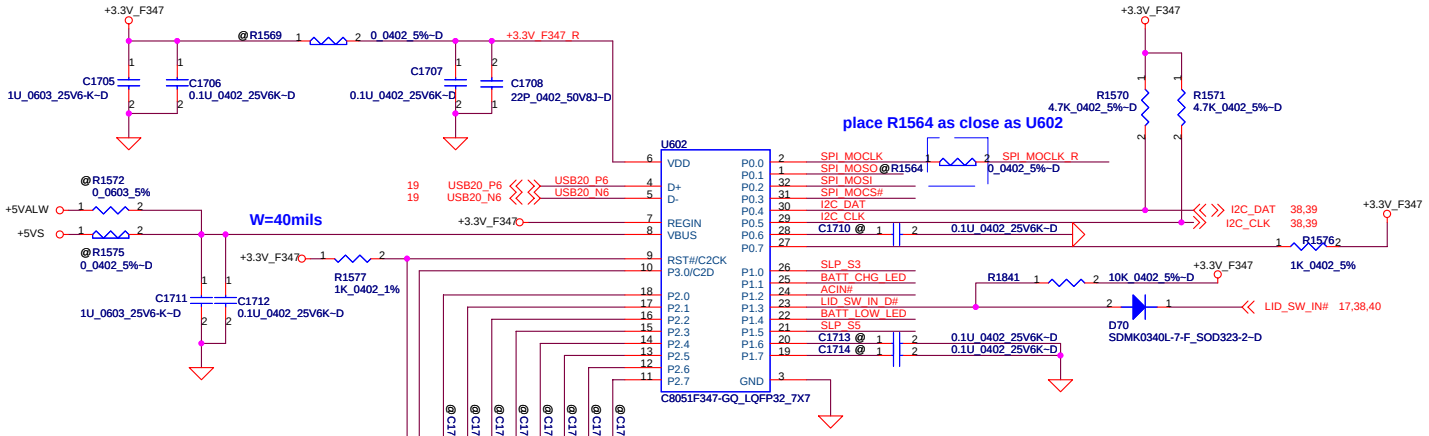

Each CPN represent different boot loader individually

SA00003IR10 S IC C8051F347-GQ LQFP 32P MCU for PALB0 (Specter) blue
SA00003IR20 S IC C8051F347-GQ LQFP 32P MCU for PAR00 (Voyager) green
★ SA00003IR30 S IC C8051F347-GQ LQFP 32P MCU for PAR10 (Avenger) white
SA00003IR40 S IC C8051F347-GQ LQFP 32P MCU for PAP00 (Phantom MLK) silver

8Mb SPI ROM

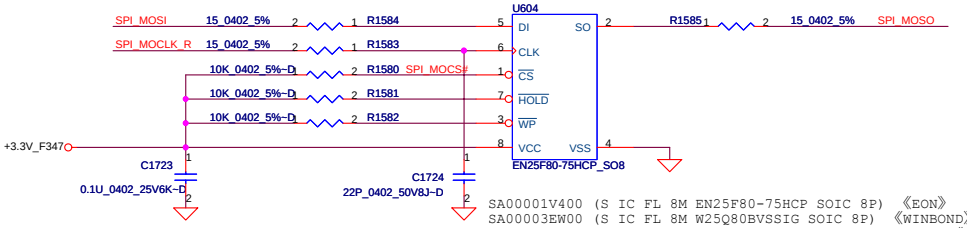

SA00001V400 (S IC FL 8M EN25F80-75HCP SOIC 8P) 《EON》
SA00003EW00 (S IC FL 8M W25Q80BVSSIG SOIC 8P) 《WINBOND》
SA000041O00 (S IC FL 8M MX25L8006EM2I-12G SOP 8P 3V) 《MXIC》

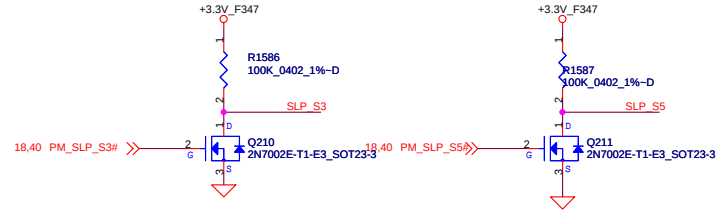

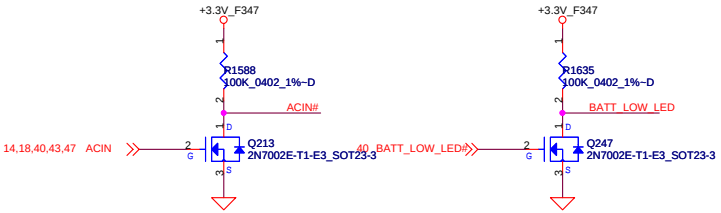

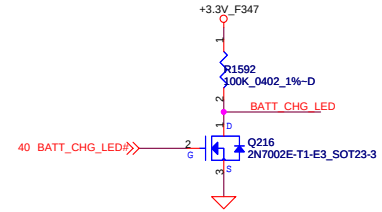

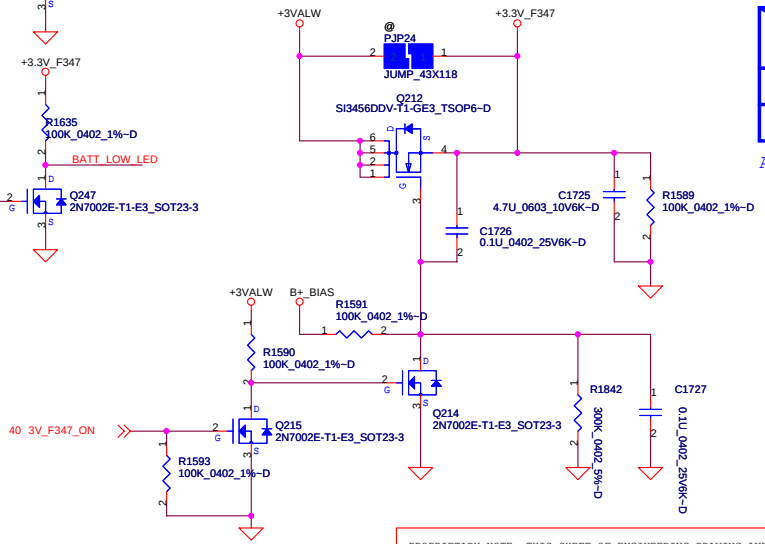

+3.3V_F347 behavior

	STATE			
	S0	S3	S4	S5
AC IN	ON	ON	ON	ON
BAT only	ON	ON	OFF	OFF

AC mode battery full in S5:turn off ELC controller

DEVICE	SMBUS ADDRESS
MAXIM - LED	0100 000b
MAXIM - GPIO	0100 001b
I2C EEPROM	1010 000b

PROPRIETARY NOTE: THIS SHEET OF ENGINEERING DRAWING AND SPECIFICATIONS CONTAINS CONFIDENTIAL TRADE SECRET AND OTHER PROPRIETARY INFORMATION OF DELL. THIS DOCUMENT MAY NOT BE TRANSFERRED OR COPIED WITHOUT THE EXPRESS WRITTEN AUTHORIZATION OF DELL. IN ADDITION, NEITHER THIS SHEET NOR THE INFORMATION IT CONTAINS WAY BE USED BY OR DISCLOSED TO ANY THIRD PARTY WITHOUT DELL'S EXPRESS WRITTEN CONSENT.

DELL CONFIDENTIAL/PROPRIETARY

Compal Electronics, Inc.

Title: SCHEMATIC M/B LA-8321

Size: | Document Number: 4019H5 | Rev: B

Date: Wednesday, August 01, 2012 | Sheet 37 of 66

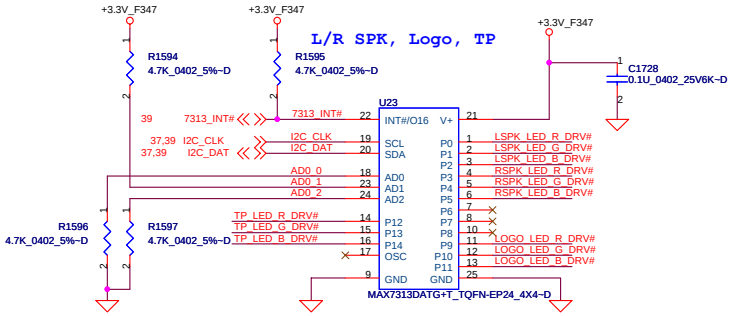

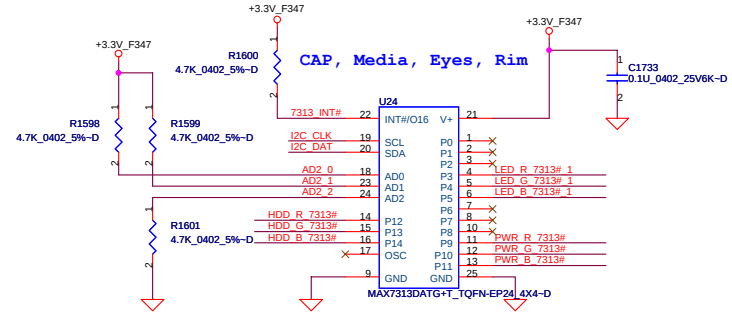

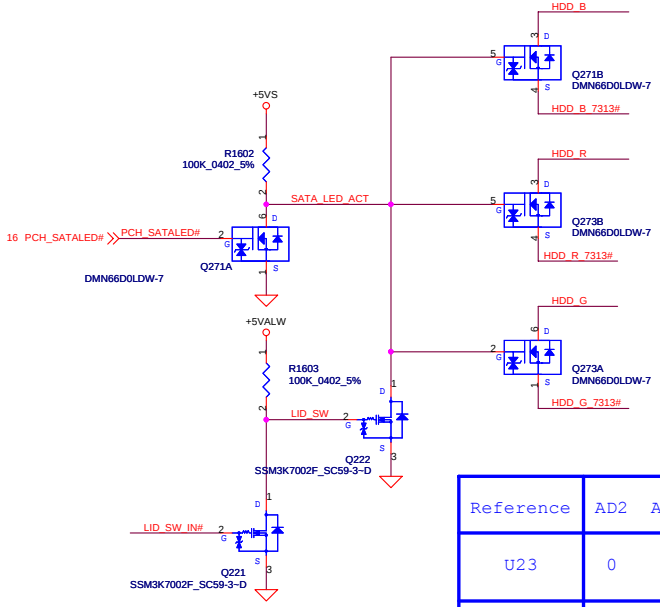

Num LED CONN

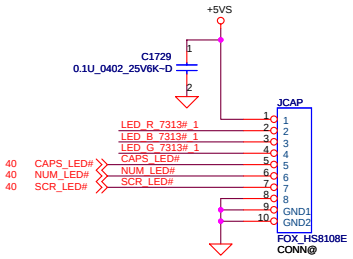

LOGO Board CONN

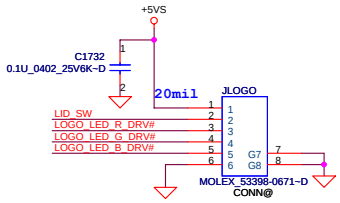

Media Board CONN

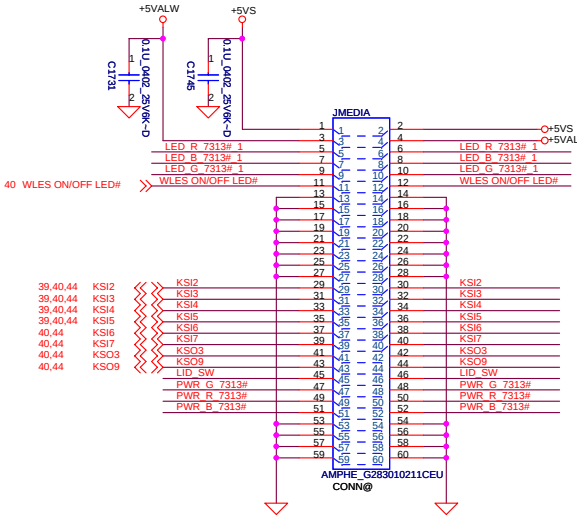

Touchpad LED CONN

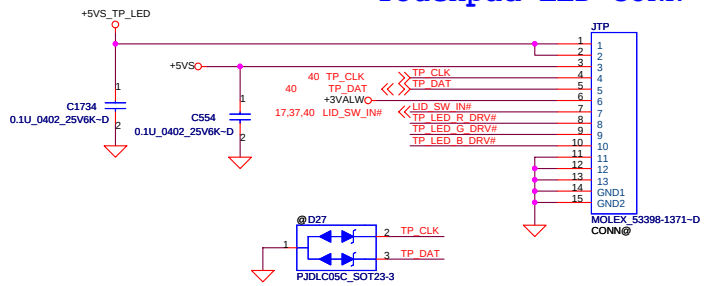

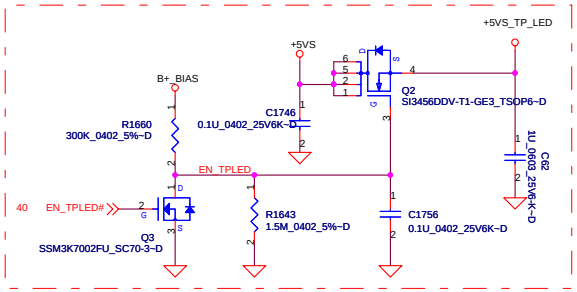

SPK LED Board CONN

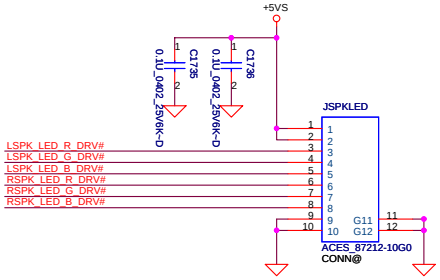

PWR BTN Board CONN

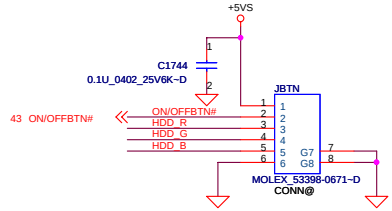

Reference	AD2	AD1	AD0	MAX7313
U23	0	1	0	L/R Headlight , Logo, TP
U24	0	1	1	Num, CAP , SCR EJECT, REV, PLAY/PAUSE FFWD, Vol_DWN, Vol_UP Wireless ON/OFF AWCC Button Alien Adrenaline Power Button Eyes Power Button Rim

DELL CONFIDENTIAL/PROPRIETARY

PROPRIETARY NOTE: THIS SHEET OF ENGINEERING DRAWING AND SPECIFICATIONS CONTAINS CONFIDENTIAL TRADE SECRET AND OTHER PROPRIETARY INFORMATION OF DELL. THIS DOCUMENT MAY NOT BE TRANSFERRED OR COPIED WITHOUT THE EXPRESS WRITTEN AUTHORIZATION OF DELL. IN ADDITION, NEITHER THIS SHEET NOR THE INFORMATION IT CONTAINS WAY BE USED BY OR DISCLOSED TO ANY THIRD PARTY WITHOUT DELL'S EXPRESS WRITTEN CONSENT.

Compal Electronics, Inc.

Title: SCHEMATIC M/B LA-8321

Size: | Document Number: 4019H5 | Rev: B

Date: Wednesday, August 01, 2012 | Sheet 38 of 66

K/B Backlight

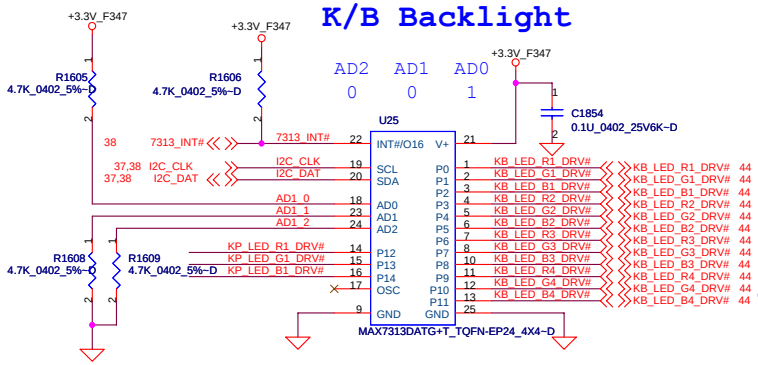

K/B Backlight CONN

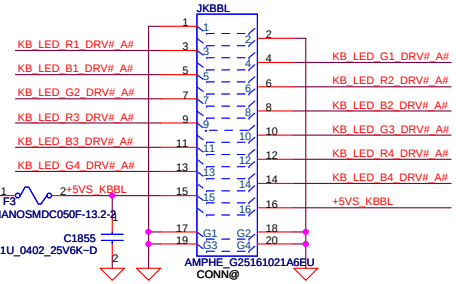

Keypad Backlight CONN

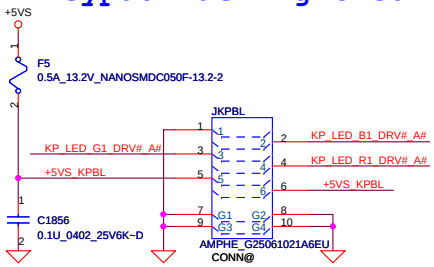

Keypad CONN

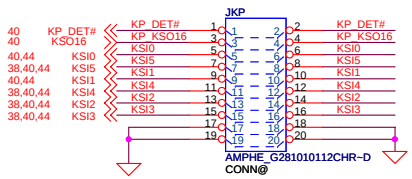

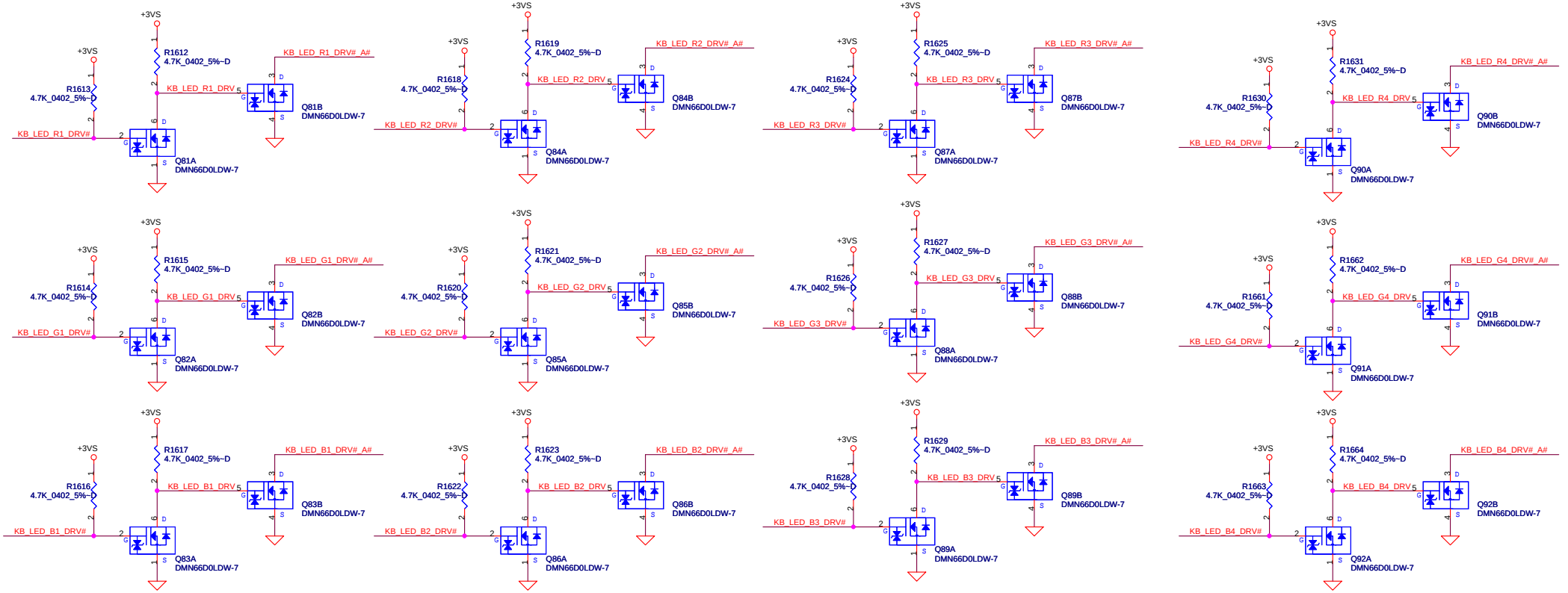

Keypad LED contorl

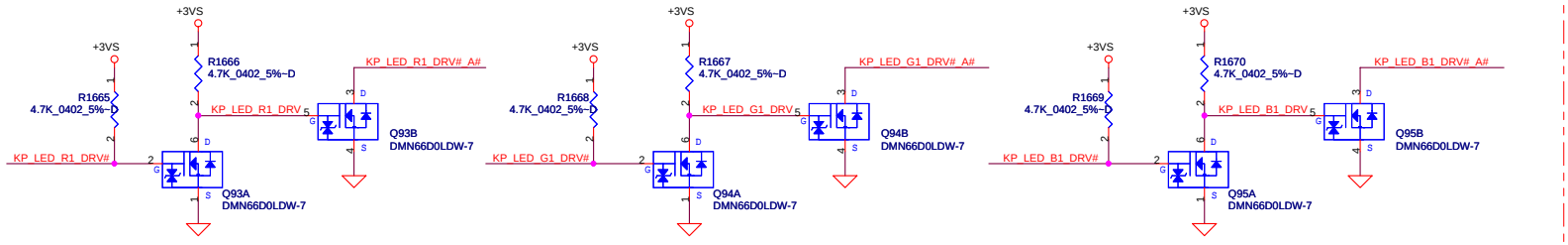

Compal Electronics, Inc.		
Title: SCHEMATIC M/B LA-8321		
Size	Document Number: 4019H5	Rev: B
Date: Wednesday, August 01, 2012	Sheet 39 of 66	

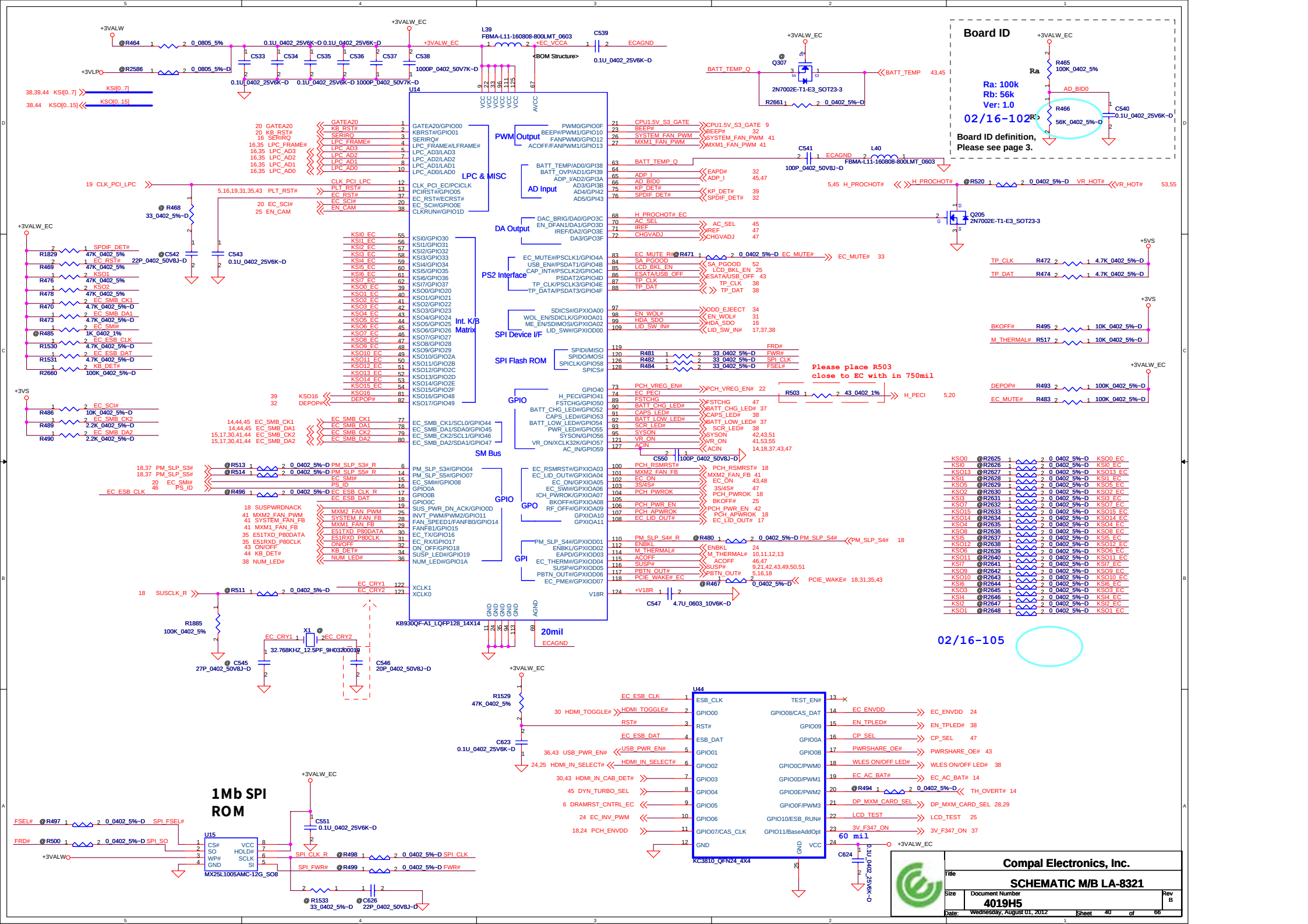
Board ID
Ra: 100k
Rb: 56k
Ver: 1.0
02/16-102
Board ID definition, Please see page 3.
U14
KB930QF-A1_LQFP128_14X14
PWM Output
LPC & MISC
AD Input
DA Output
PS2 Interface
Int. K/B Matrix
SPI Device I/F
SPI Flash ROM
GPIO
SM Bus
GPO
GPI
U44
KC3810_QFN24_4X4
U15
MX25L1005AMC-12G_SO8
1Mb SPI ROM
Please place R503 close to EC with in 750mil
20mil
60 mil
02/16-105
Compal Electronics, Inc.
SCHEMATIC M/B LA-8321
Document Number 4019H5
Rev B
Wednesday, August 01, 2012
Sheet 40 of 66

System Thermal Sensor

Diode circuit s used for skin temp sensor
(placed between CPU and MXM).
Place C295 close to Q13 as possible.

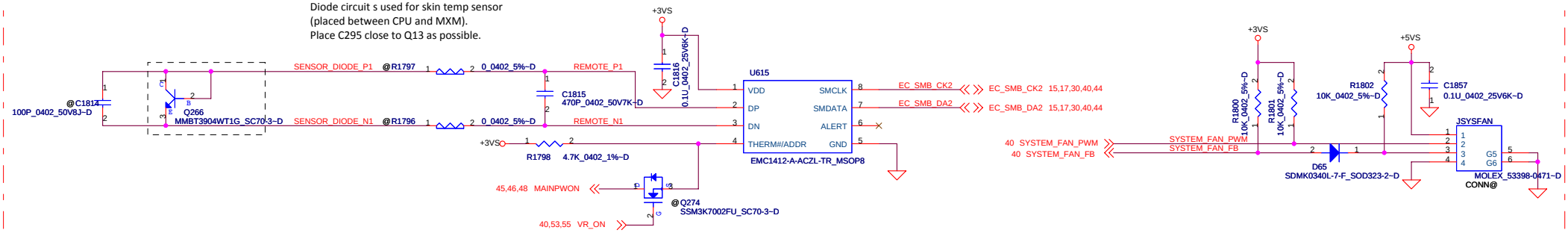

MXM1 Thermal Sensor

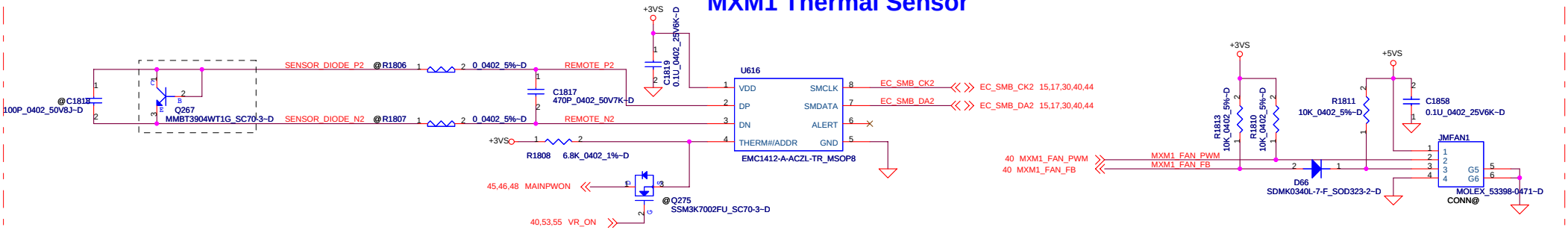

MXM2 Thermal Sensor

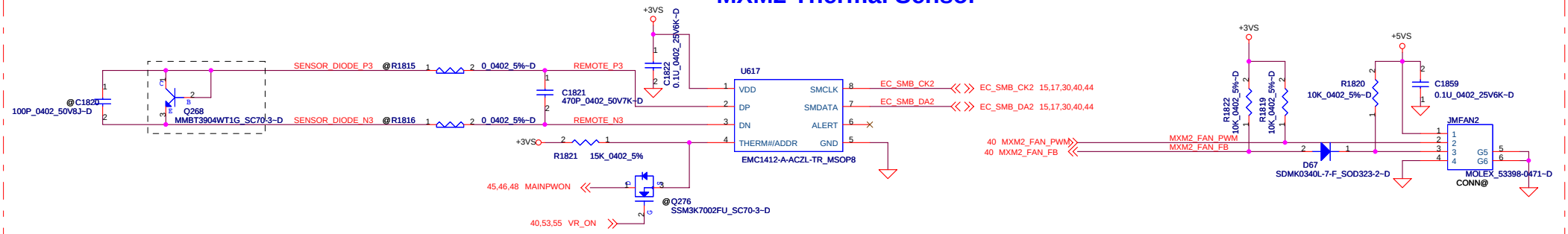

Pull up resistor on thermtrip pin	SMBUS address
4.7k	1111_100xb
6.8k	1011_100xb
10k	1001_100xb
15k	1101_100xb
22k	0011_100xb
33k	0111_100xb

DELL CONFIDENTIAL/PROPRIETARY

PROPRIETARY NOTE: THIS SHEET OF ENGINEERING DRAWING AND SPECIFICATIONS CONTAINS CONFIDENTIAL TRADE SECRET AND OTHER PROPRIETARY INFORMATION OF DELL. THIS DOCUMENT MAY NOT BE TRANSFERRED OR COPIED WITHOUT THE EXPRESS WRITTEN AUTHORIZATION OF DELL. IN ADDITION, NEITHER THIS SHEET NOR THE INFORMATION IT CONTAINS WAY BE USED BY OR DISCLOSED TO ANY THIRD PARTY WITHOUT DELL'S EXPRESS WRITTEN CONSENT.

Compal Electronics, Inc.

Title: SCHEMATIC M/B LA-8321

Size: | Document Number: 4019H5 | Rev: B

Date: Wednesday, August 01, 2012 | Sheet 41 of 66

+5VALW to +5VS

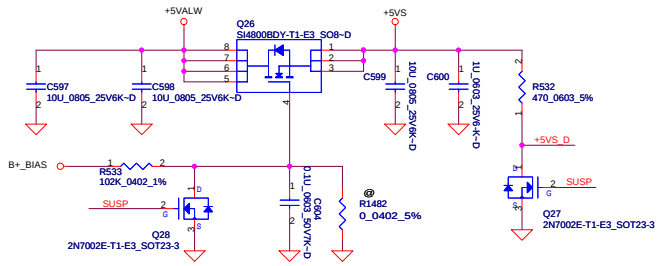

+3VALW to +3VMXM Transfer

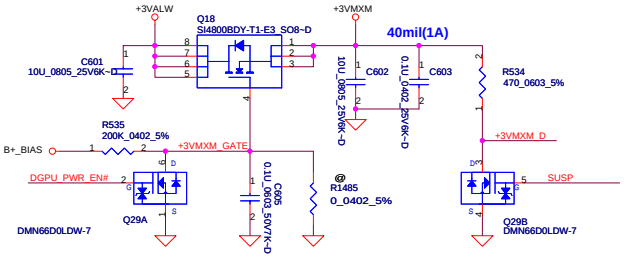

+3VALW to +3V_PCH

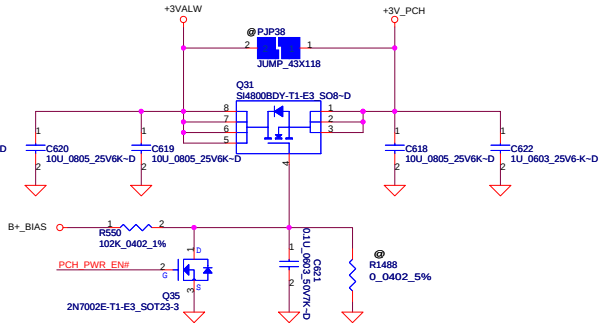

+3VALW to +3VS

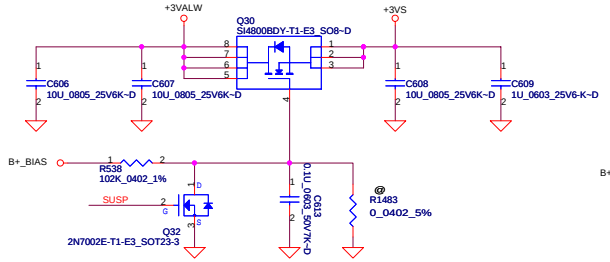

+5VALW to +5VMXM Transfer

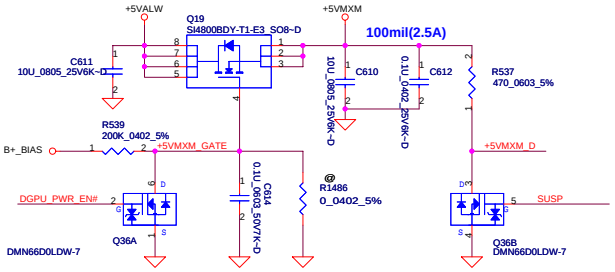

+1.5V To +1.5VS

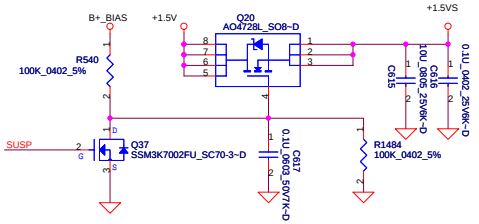

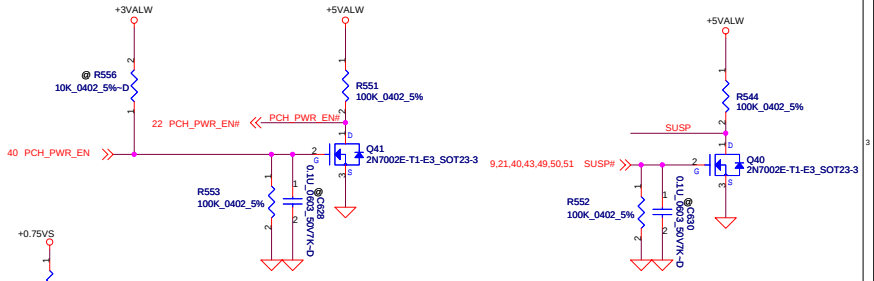

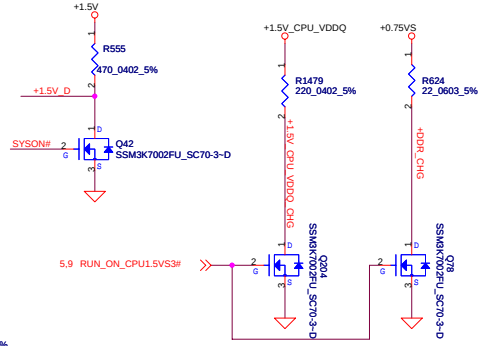

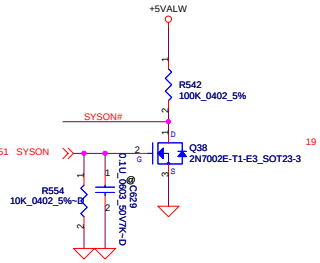

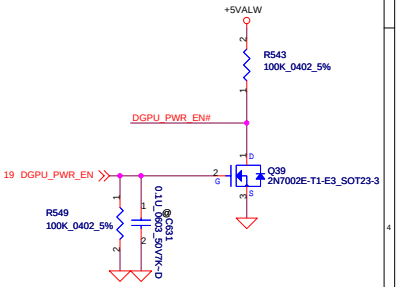

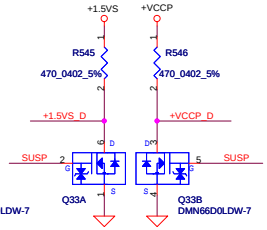

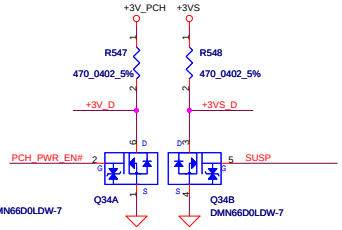

PROPRIETARY NOTE: THIS SHEET OF ENGINEERING DRAWING AND SPECIFICATIONS CONTAINS CONFIDENTIAL TRADE SECRET AND OTHER PROPRIETARY INFORMATION OF DELL. THIS DOCUMENT MAY NOT BE TRANSFERRED OR COPIED WITHOUT THE EXPRESS WRITTEN AUTHORIZATION OF DELL. IN ADDITION, NEITHER THIS SHEET NOR THE INFORMATION IT CONTAINS WAY BE USED BY OR DISCLOSED TO ANY THIRD PARTY WITHOUT DELL'S EXPRESS WRITTEN CONSENT.

DELL CONFIDENTIAL/PROPRIETARY

Compal Electronics, Inc.	
Title	SCHEMATIC M/B LA-8321
Size	Document Number: 4019H5 — Rev: B
Date: Wednesday, August 01, 2012	Sheet 42 of 66

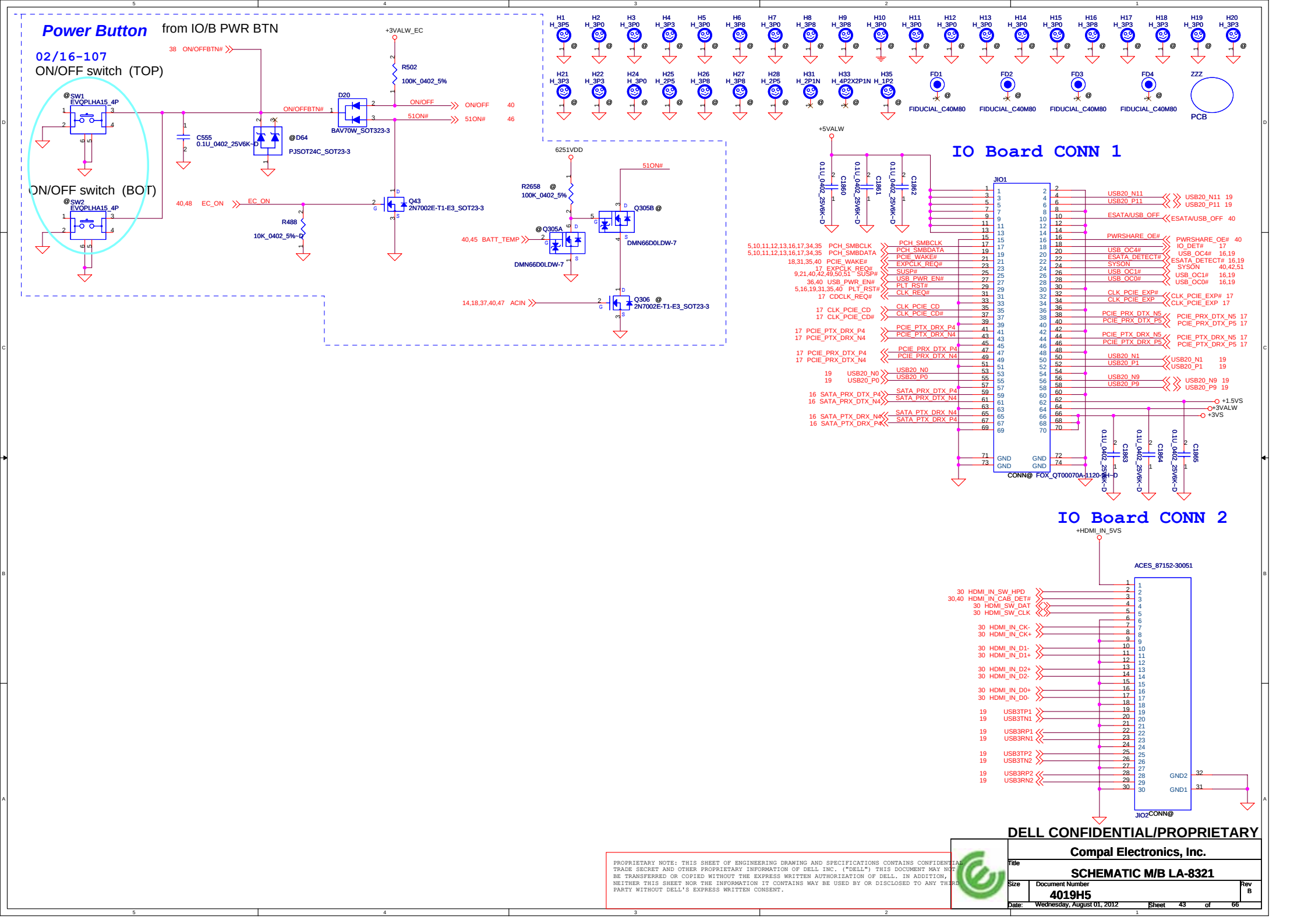
Power Button
from IO/B PWR BTN
02/16-107
ON/OFF switch (TOP)
ON/OFF switch (BOT)
+3VALW_EC
38 ON/OFFBTN#
R502
100K_0402_5%
@SW1
EVQPLHA15_4P
@SW2
EVQPLHA15_4P
C555
0.1U_0402_25V6K-D
D20
BAV70W_SOT323-3
@D64
PJSOT24C_SOT23-3
ON/OFFBTN#
ON/OFF
51ON#
40,48 EC_ON
EC_ON
R488
10K_0402_5%-D
Q43
2N7002E-T1-E3_SOT23-3
6251VDD
R2658 @
100K_0402_5%
@Q305A
DMN66D0LDW-7
Q305B @
DMN66D0LDW-7
40,45 BATT_TEMP
14,18,37,40,47 ACIN
Q306 @
2N7002E-T1-E3_SOT23-3
H1 H_3P5
H2 H_3P0
H3 H_3P0
H4 H_3P3
H5 H_3P0
H6 H_3P8
H7 H_3P0
H8 H_3P8
H9 H_3P8
H10 H_3P0
H11 H_3P0
H12 H_3P0
H13 H_3P0
H14 H_3P0
H15 H_3P0
H16 H_3P8
H17 H_3P3
H18 H_3P3
H19 H_3P0
H20 H_3P3
H21 H_3P3
H22 H_3P3
H24 H_3P0
H25 H_2P5
H26 H_3P8
H27 H_3P8
H28 H_2P5
H31 H_2P1N
H33 H_4P2X2P1N
H35 H_1P2
FD1 FIDUCIAL_C40M80
FD2 FIDUCIAL_C40M80
FD3 FIDUCIAL_C40M80
FD4 FIDUCIAL_C40M80
ZZZ
PCB
IO Board CONN 1
+5VALW
C1860
C1861
C1862
JIO1
PCH_SMBCLK
PCH_SMBDATA
PCIE_WAKE#
EXPCLK_REQ#
SUSP#
USB_PWR_EN#
PLT_RST#
CLK_REQ#
CLK_PCIE_CD
CLK_PCIE_CD#
PCIE_PTX_DRX_P4
PCIE_PTX_DRX_N4
PCIE_PRX_DTX_P4
PCIE_PRX_DTX_N4
USB20_N0
USB20_P0
SATA_PRX_DTX_P4
SATA_PRX_DTX_N4
SATA_PTX_DRX_N4
SATA_PTX_DRX_P4
USB20_N11
USB20_P11
ESATA/USB_OFF
PWRSHARE_OE#
IO_DET#
USB_OC4#
ESATA_DETECT#
SYSON
USB_OC1#
USB_OC0#
CLK_PCIE_EXP#
CLK_PCIE_EXP
PCIE_PRX_DTX_N5
PCIE_PRX_DTX_P5
PCIE_PTX_DRX_N5
PCIE_PTX_DRX_P5
USB20_N1
USB20_P1
USB20_N9
USB20_P9
+1.5VS
+3VALW
+3VS
GND
C1863
C1864
C1865
CONN@ FOX_QT00070A-1120-9H-D
IO Board CONN 2
+HDMI_IN_5VS
ACES_87152-30051
HDMI_IN_SW_HPD
HDMI_IN_CAB_DET#
HDMI_SW_DAT
HDMI_SW_CLK
HDMI_IN_CK-
HDMI_IN_CK+
HDMI_IN_D1-
HDMI_IN_D1+
HDMI_IN_D2+
HDMI_IN_D2-
HDMI_IN_D0+
HDMI_IN_D0-
USB3TP1
USB3TN1
USB3RP1
USB3RN1
USB3TP2
USB3TN2
USB3RP2
USB3RN2
GND2
GND1
JIO2 CONN@
DELL CONFIDENTIAL/PROPRIETARY
PROPRIETARY NOTE: THIS SHEET OF ENGINEERING DRAWING AND SPECIFICATIONS CONTAINS CONFIDENTIAL TRADE SECRET AND OTHER PROPRIETARY INFORMATION OF DELL INC. ("DELL") THIS DOCUMENT MAY NOT BE TRANSFERRED OR COPIED WITHOUT THE EXPRESS WRITTEN AUTHORIZATION OF DELL. IN ADDITION, NEITHER THIS SHEET NOR THE INFORMATION IT CONTAINS WAY BE USED BY OR DISCLOSED TO ANY THIRD PARTY WITHOUT DELL'S EXPRESS WRITTEN CONSENT.
Compal Electronics, Inc.
Title
SCHEMATIC M/B LA-8321
Size
Document Number
4019H5
Rev
B
Date: Wednesday, August 01, 2012
Sheet 43 of 66

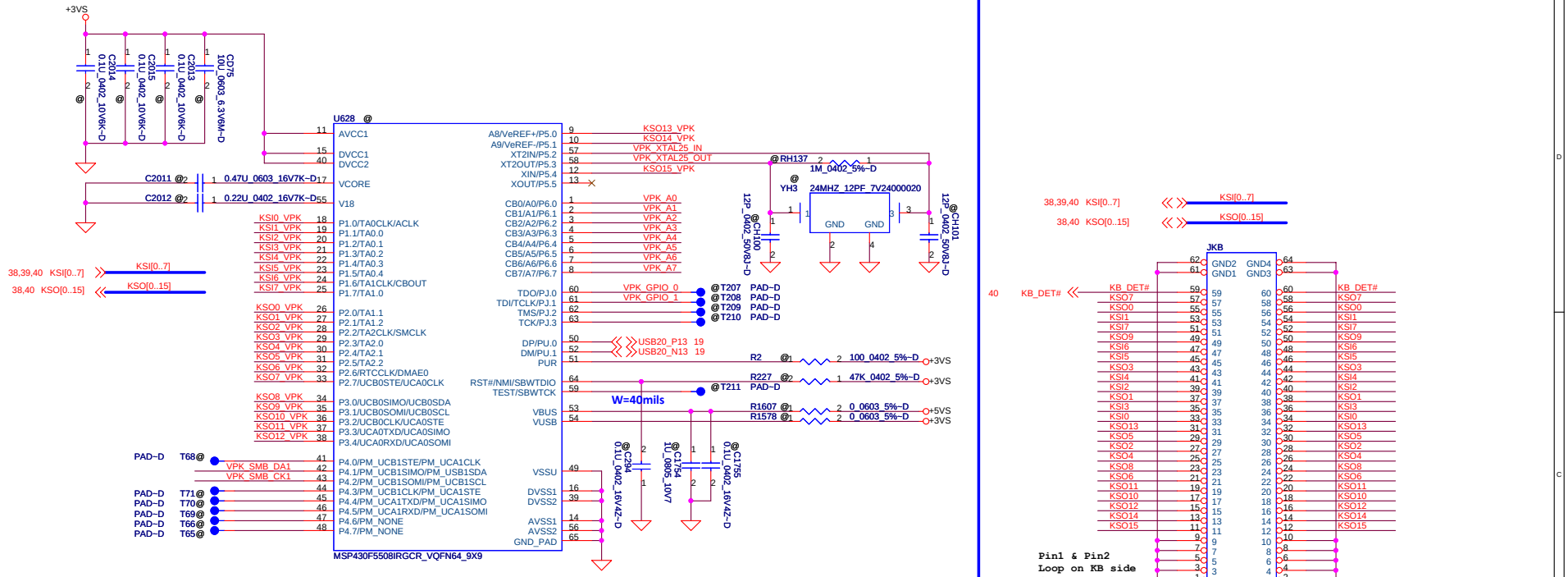

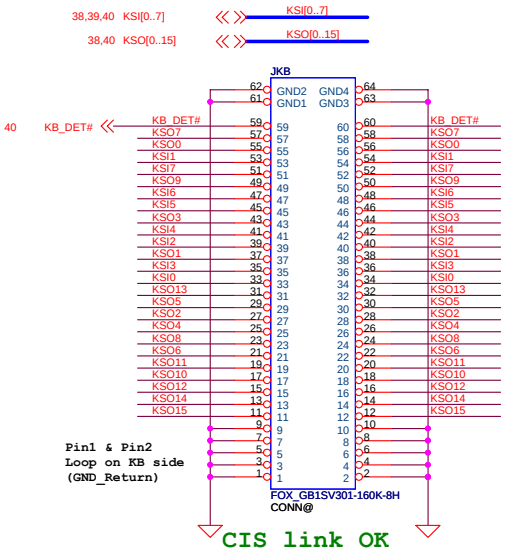

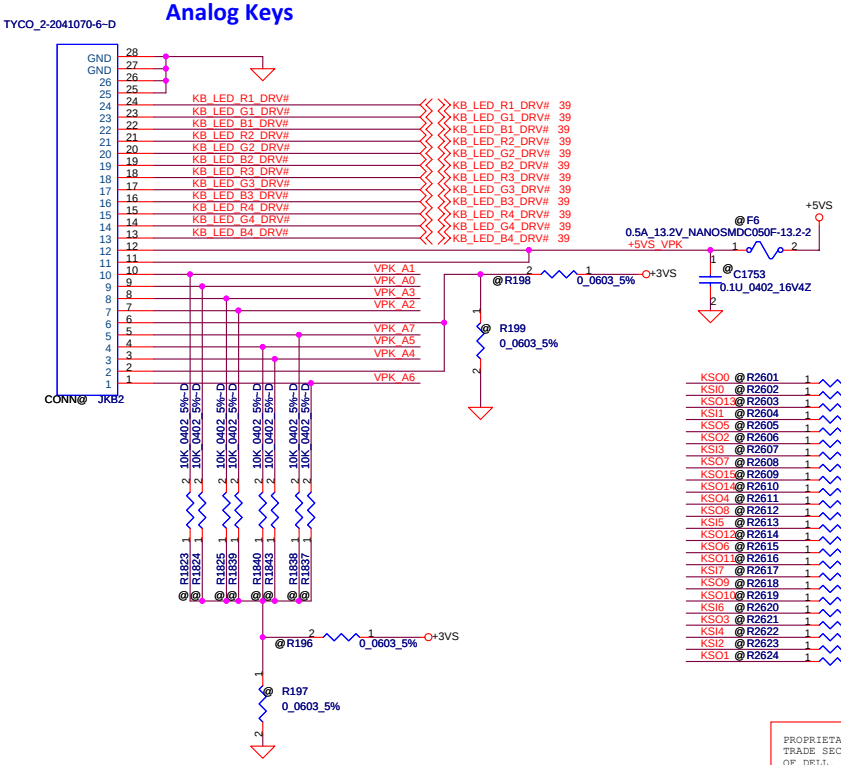

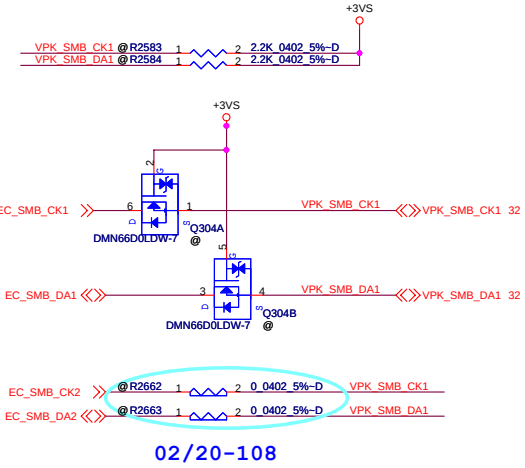

DELL CONFIDENTIAL/PROPRIETARY

PROPRIETARY NOTE: THIS SHEET OF ENGINEERING DRAWINGS AND SPECIFICATIONS CONTAINS CONFIDENTIAL, TRADE SECRET, AND OTHER PROPRIETARY INFORMATION OF DELL. ("DELL"). THIS DOCUMENT MAY NOT BE TRANSFERRED OR COPIED WITHOUT THE EXPRESS WRITTEN AUTHORIZATION OF DELL. IN ADDITION, NEITHER THIS SHEET NOR THE INFORMATION IT CONTAINS MAY BE USED BY OR DISCLOSED TO ANY THIRD PARTY WITHOUT DELL'S EXPRESS WRITTEN CONSENT.

Compal Electronics, Inc.

Title: SCHEMATIC M/B LA-8321

Size: | Document Number: 4019H5 | Rev: B

Date: Wednesday, August 01, 2012 | Sheet 44 of 66

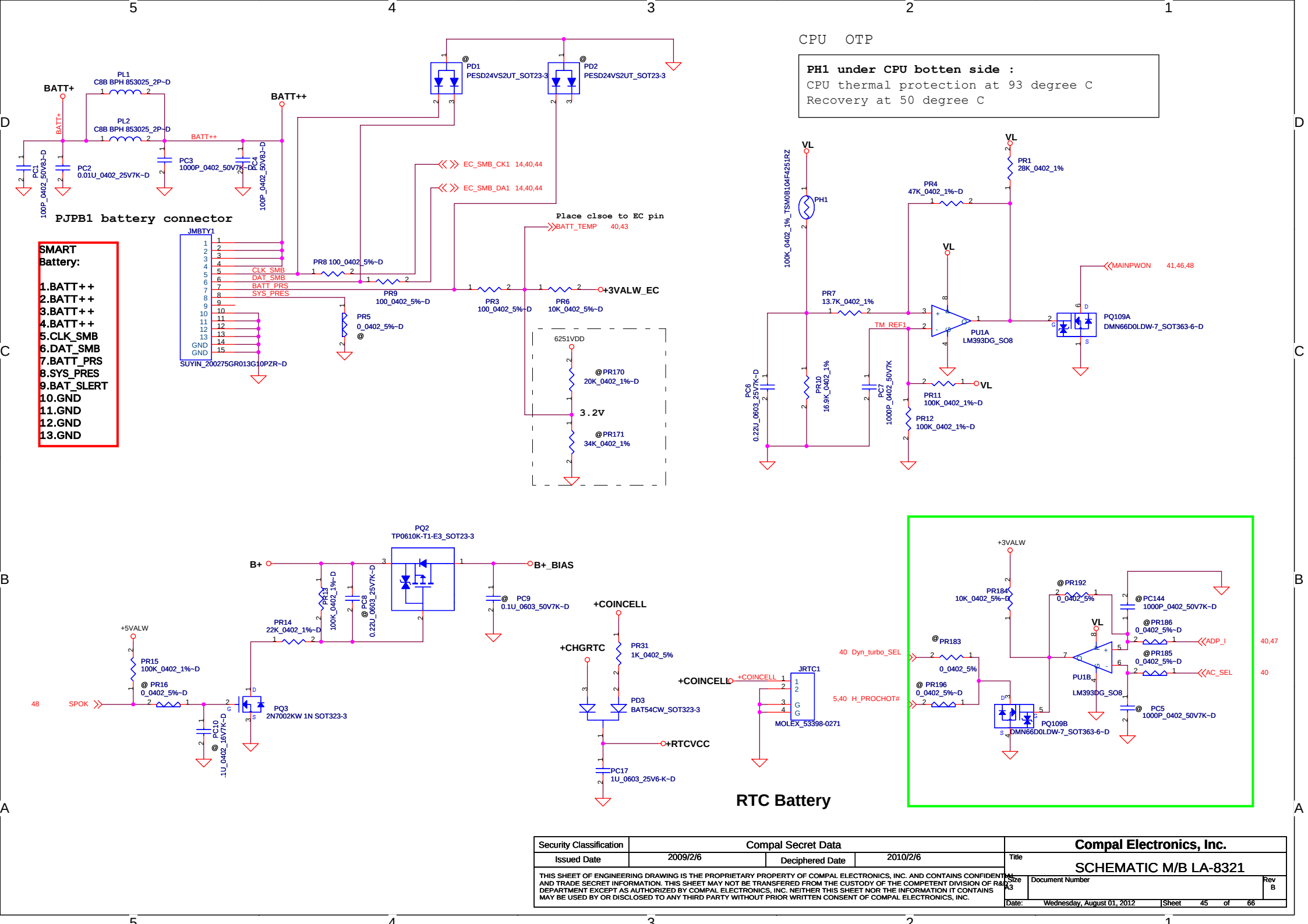

Security Classification	Compal Secret Data		
Issued Date	2009/2/6	Deciphered Date	2010/2/6

THIS SHEET OF ENGINEERING DRAWING IS THE PROPRIETARY PROPERTY OF COMPAL ELECTRONICS, INC. AND CONTAINS CONFIDENTIAL AND TRADE SECRET INFORMATION. THIS SHEET MAY NOT BE TRANSFERED FROM THE CUSTODY OF THE COMPETENT DIVISION OF R&D DEPARTMENT EXCEPT AS AUTHORIZED BY COMPAL ELECTRONICS, INC. NEITHER THIS SHEET NOR THE INFORMATION IT CONTAINS MAY BE USED BY OR DISCLOSED TO ANY THIRD PARTY WITHOUT PRIOR WRITTEN CONSENT OF COMPAL ELECTRONICS, INC.

Compal Electronics, Inc.

Title: SCHEMATIC M/B LA-8321

Size: A3 | Document Number | Rev: B

Date: Wednesday, August 01, 2012 | Sheet 45 of 66

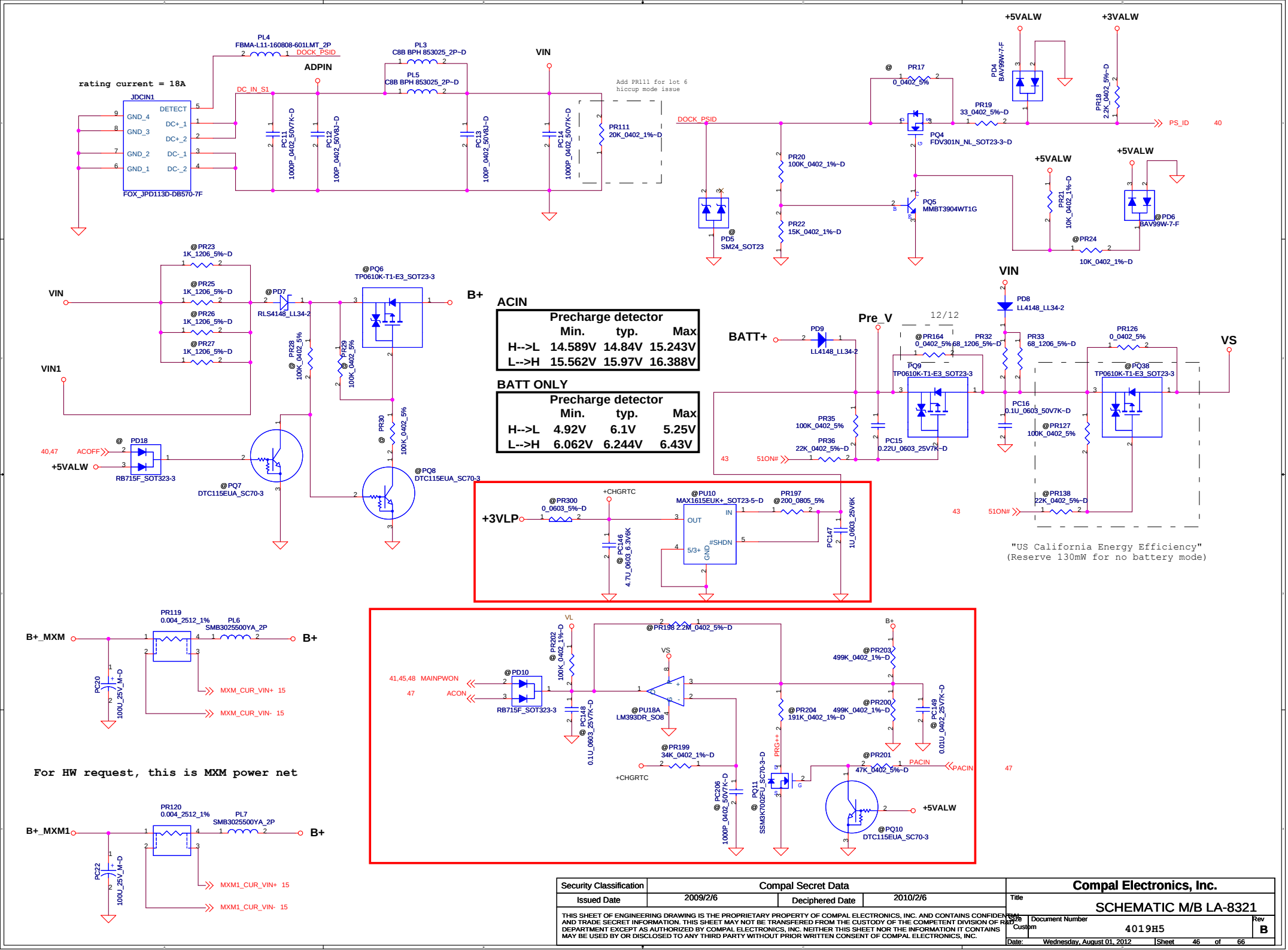

Security Classification	Compal Secret Data		
Issued Date	2009/2/6	Deciphered Date	2010/2/6

THIS SHEET OF ENGINEERING DRAWING IS THE PROPRIETARY PROPERTY OF COMPAL ELECTRONICS, INC. AND CONTAINS CONFIDENTIAL AND TRADE SECRET INFORMATION. THIS SHEET MAY NOT BE TRANSFERED FROM THE CUSTODY OF THE COMPETENT DIVISION OF R&D DEPARTMENT EXCEPT AS AUTHORIZED BY COMPAL ELECTRONICS, INC. NEITHER THIS SHEET NOR THE INFORMATION IT CONTAINS MAY BE USED BY OR DISCLOSED TO ANY THIRD PARTY WITHOUT PRIOR WRITTEN CONSENT OF COMPAL ELECTRONICS, INC.

Compal Electronics, Inc.

Title: SCHEMATIC M/B LA-8321

Size	Document Number	Rev
Custom	4019H5	B

Date: Wednesday, August 01, 2012 Sheet 46 of 66

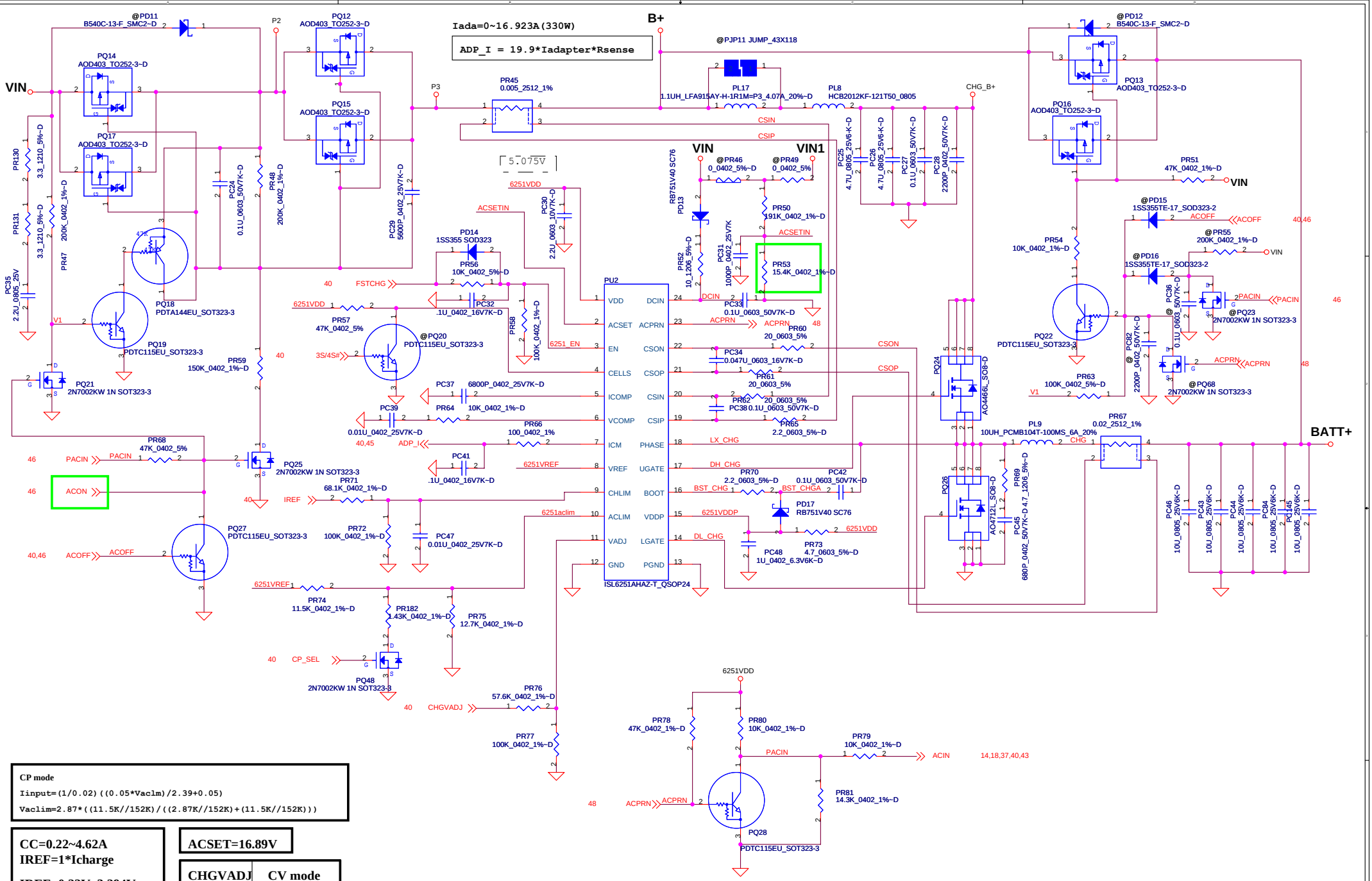
Iada=0~16.923A(330W)
ADP_I = 19.9*Iadapter*Rsense
B+
VIN
VIN1
BATT+
CHG_B+
@PJP11 JUMP_43X118
PL17 1.1UH_LFA915AY-H-1R1M=P3_4.07A_20%~D
PL8 HCB2012KF-121T50_0805
PR45 0.005_2512_1%
CSIN
CSIP
PU2 ISL6251AHAZ-T_QSOP24
VDD DCIN EN CSON CELLS CSOP ICOMP CSIN VCOMP CSIP ICM PHASE VREF UGATE CHLIM BOOT ACLIM VDDP VADJ LGATE GND PGND
6251VDD
6251VDDP
6251VREF
6251aclim
6251_EN
ACSETIN
ACPRN
DCIN
CSON
CSOP
LX_CHG
DH_CHG
BST_CHG
DL_CHG
ADP_I
IREF
FSTCHG
CHGVADJ
CP_SEL
PACIN
ACON
ACOFF
ACIN
PQ14 AOD403_TO252-3~D
PQ15 AOD403_TO252-3~D
PQ16 AOD403_TO252-3~D
PQ17 AOD403_TO252-3~D
PQ12 AOD403_TO252-3~D
PQ13 AOD403_TO252-3~D
@PD11 B540C-13-F_SMC2~D
@PD12 B540C-13-F_SMC2~D
PD14 1SS355 SOD323
@PD15 1SS355TE-17_SOD323-2
@PD16 1SS355TE-17_SOD323-2
PD17 RB751V40 SC76
RB751V40 SC76 PD13
PQ18 PDTA144EU_SOT323-3
PQ19 PDTC115EU_SOT323-3
@PQ20 PDTC115EU_SOT323-3
PQ21 2N7002KW 1N SOT323-3
PQ22 PDTC115EU_SOT323-3
PQ23 2N7002KW 1N SOT323-3
PQ24 AO4466L_SO8~D
PQ25 2N7002KW 1N SOT323-3
PQ26 AO4712L_SO8~D
PQ27 PDTC115EU_SOT323-3
PQ28 PDTC115EU_SOT323-3
@PQ68 2N7002KW 1N SOT323-3
PQ48 2N7002KW 1N SOT323-3
@PR46 0_0402_5%~D
@PR49 0_0402_5%
@PR55 200K_0402_1%~D
PR50 191K_0402_1%~D
PR51 47K_0402_1%~D
PR52 10_1206_5%~D
PR53 15.4K_0402_1%~D
PR54 10K_0402_1%~D
PR56 10K_0402_5%~D
PR57 47K_0402_5%
PR58 100K_0402_1%~D
PR59 150K_0402_1%~D
PR60 20_0603_5%
PR61 20_0603_5%
PR62 20_0603_5%
PR63 100K_0402_5%~D
PR64 10K_0402_1%~D
PR65 2.2_0603_5%~D
PR66 100_0402_1%
PR67 0.02_2512_1%
PR68 47K_0402_5%
PR69 4.7_1206_5%~D
PR71 68.1K_0402_1%~D
PR72 100K_0402_1%~D
PR73 4.7_0603_5%~D
PR74 11.5K_0402_1%~D
PR75 12.7K_0402_1%~D
PR76 57.6K_0402_1%~D
PR77 100K_0402_1%~D
PR78 47K_0402_1%~D
PR79 10K_0402_1%~D
PR80 10K_0402_1%~D
PR81 14.3K_0402_1%~D
PR182 1.43K_0402_1%~D
PC24 0.1U_0603_50V7K~D
PC25 4.7U_0805_25V6-K~D
PC26 4.7U_0805_25V6-K~D
PC27 0.1U_0603_50V7K~D
PC28 2200P_0402_50V7K~D
PC29 5600P_0402_25V7K~D
PC30 2.2U_0603_10V7K~D
PC31 1000P_0402_25V7K
PC32 .1U_0402_16V7K~D
PC33 0.1U_0603_50V7K~D
PC34 0.047U_0603_16V7K~D
PC35 2.2U_0805_25V
PC36 0.1U_0603_50V7K~D
PC37 6800P_0402_25V7K~D
PC38 0.1U_0603_50V7K~D
PC39 0.01U_0402_25V7K~D
PC41 .1U_0402_16V7K~D
PC42 0.1U_0603_50V7K~D
PC43 10U_0805_25V6K~D
PC44 10U_0805_25V6K~D
PC45 680P_0402_50V7K~D
PC46 10U_0805_25V6K~D
PC47 0.01U_0402_25V7K~D
PC48 1U_0402_6.3V6K~D
PC82 2200P_0402_50V7K~D
PC84 10U_0805_25V6K~D
PC145 10U_0805_25V6K~D
PL9 10UH_PCMB104T-100MS_6A_20%
CHG
5.075V
CP mode
Iinput=(1/0.02)((0.05*Vaclm)/2.39+0.05)
Vaclim=2.87*((11.5K//152K)/((2.87K//152K)+(11.5K//152K)))
CC=0.22~4.62A
IREF=1*Icharge
IREF=0.22V~3.294V
ACSET=16.89V
3S/4S# signal
High 3S
Low 4S
CHGVADJ CV mode
0V 4V per cell
1.882V 4.2V per cell
3.294V 4.35V per cell
Security Classification Compal Secret Data
Issued Date 2009/2/6 Deciphered Date 2010/2/6
THIS SHEET OF ENGINEERING DRAWING IS THE PROPRIETARY PROPERTY OF COMPAL ELECTRONICS, INC. AND CONTAINS CONFIDENTIAL AND TRADE SECRET INFORMATION. THIS SHEET MAY NOT BE TRANSFERED FROM THE CUSTODY OF THE COMPETENT DIVISION OF R&D DEPARTMENT EXCEPT AS AUTHORIZED BY COMPAL ELECTRONICS, INC. NEITHER THIS SHEET NOR THE INFORMATION IT CONTAINS MAY BE USED BY OR DISCLOSED TO ANY THIRD PARTY WITHOUT PRIOR WRITTEN CONSENT OF COMPAL ELECTRONICS, INC.
Compal Electronics, Inc.
Title SCHEMATIC M/B LA-8321
Size Document Number 4019H5 Rev B
Date: Wednesday, August 01, 2012 Sheet 47 of 66

Note:
Use TPS51125 IC can remove RTC refernece LDO
Use TPS51427 IC must keep RTC refernece LDO

3.3VALWP
TDC 8.8A
Peak Current 12.5A
OCP current 15.A
H/S RDS(on) 12.2m ohm(typ),15m ohm(max)
L/S RDS(on) 3.6m ohm(typ),4.5m ohm(max)
FSW 375KHz

5VALWP
TDC 13.9A
Peak Current 19.8A
OCP current 23.8A
H/S RDS(on) 12.2m ohm(typ),15m ohm(max)
L/S RDS(on) 3.6m ohm(typ),4.5m ohm(max)
FSW 375KHz

Typ: 175mA

Typ: 175mA

VFB=2.0V

PU3 RT8205LZQW(2)_WQFN24_4X4

<BOM Structure>

<BOM Structure>

9/2 for EC power rail

Security Classification	Compal Secret Data		
Issued Date	2009/2/6	Deciphered Date	2010/2/6

THIS SHEET OF ENGINEERING DRAWING IS THE PROPRIETARY PROPERTY OF COMPAL ELECTRONICS, INC. AND CONTAINS CONFIDENTIAL AND TRADE SECRET INFORMATION. THIS SHEET MAY NOT BE TRANSFERED FROM THE CUSTODY OF THE COMPETENT DIVISION OF R&D DEPARTMENT EXCEPT AS AUTHORIZED BY COMPAL ELECTRONICS, INC. NEITHER THIS SHEET NOR THE INFORMATION IT CONTAINS MAY BE USED BY OR DISCLOSED TO ANY THIRD PARTY WITHOUT PRIOR WRITTEN CONSENT OF COMPAL ELECTRONICS, INC.

Compal Electronics, Inc.

Title: SCHEMATIC M/B LA-8321

Size: Custom | Document Number: 4019H5 | Rev: B

Date: Wednesday, August 01, 2012 | Sheet 48 of 66

+VCCPP
TDC 10.7A
Peak Current 15.3A
OCP current 18.3A
H/S RDS(on) 12.2m ohm(typ),15m ohm(max)
L/S RDS(on) 2.7m ohm(typ),3.3m ohm(max)
FSW 300KHz

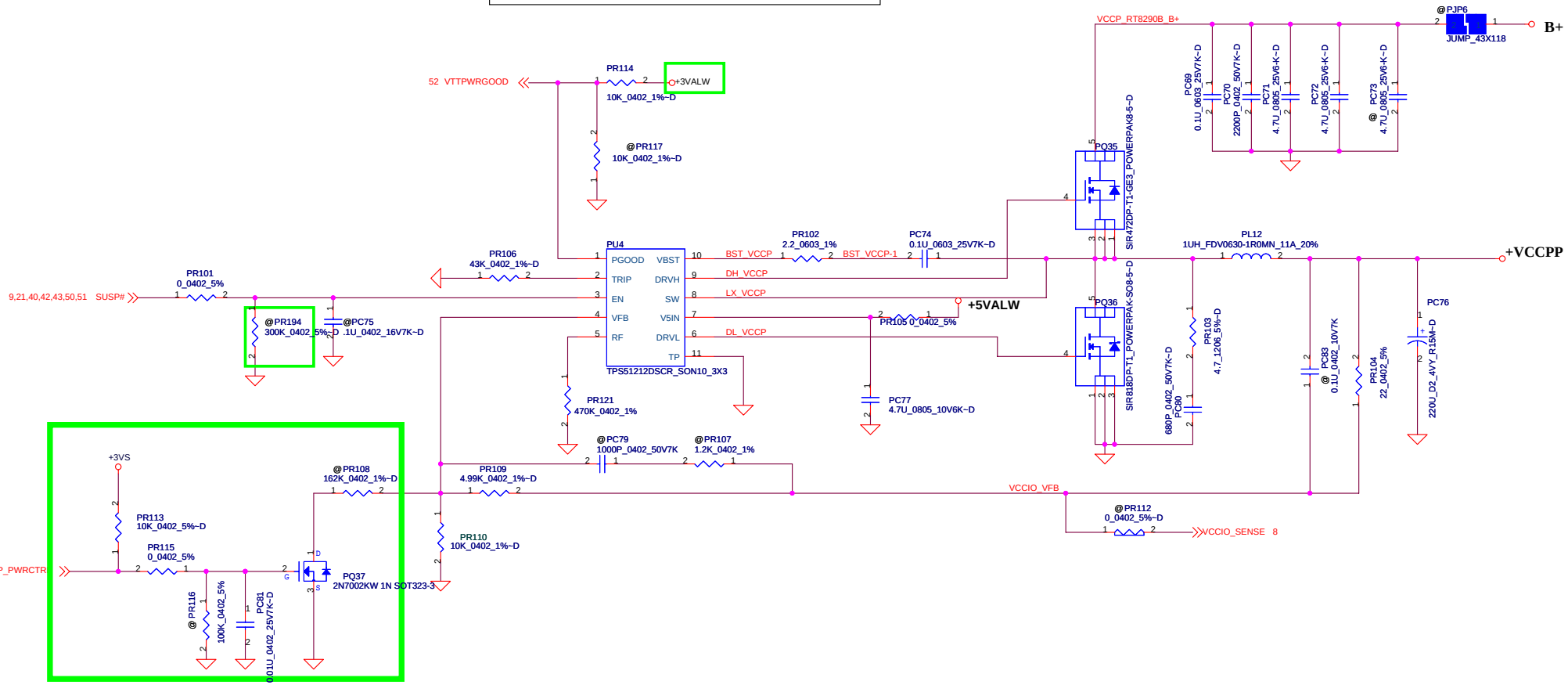

VCCP_PWRCTRL	VCCPP Vout
0	1.05V
1	1.07V(reserve)

Security Classification	Compal Secret Data		
Issued Date	2008/2/5	Deciphered Date	2008/6/05

THIS SHEET OF ENGINEERING DRAWING IS THE PROPRIETARY PROPERTY OF COMPAL ELECTRONICS, INC. AND CONTAINS CONFIDENTIAL AND TRADE SECRET INFORMATION. THIS SHEET MAY NOT BE TRANSFERED FROM THE CUSTODY OF THE COMPETENT DIVISION OF R&D DEPARTMENT EXCEPT AS AUTHORIZED BY COMPAL ELECTRONICS, INC. NEITHER THIS SHEET NOR THE INFORMATION IT CONTAINS MAY BE USED BY OR DISCLOSED TO ANY THIRD PARTY WITHOUT PRIOR WRITTEN CONSENT OF COMPAL ELECTRONICS, INC.

Compal Electronics, Inc.

Title: SCHEMATIC M/B LA-8321

Size: Custom | Document Number: 4019H5 | Rev: B

Date: Wednesday, August 01, 2012 | Sheet 49 of 66

+1.8VSP
TDC 0.9A
Peak Current 1.2A
OCP current 3A

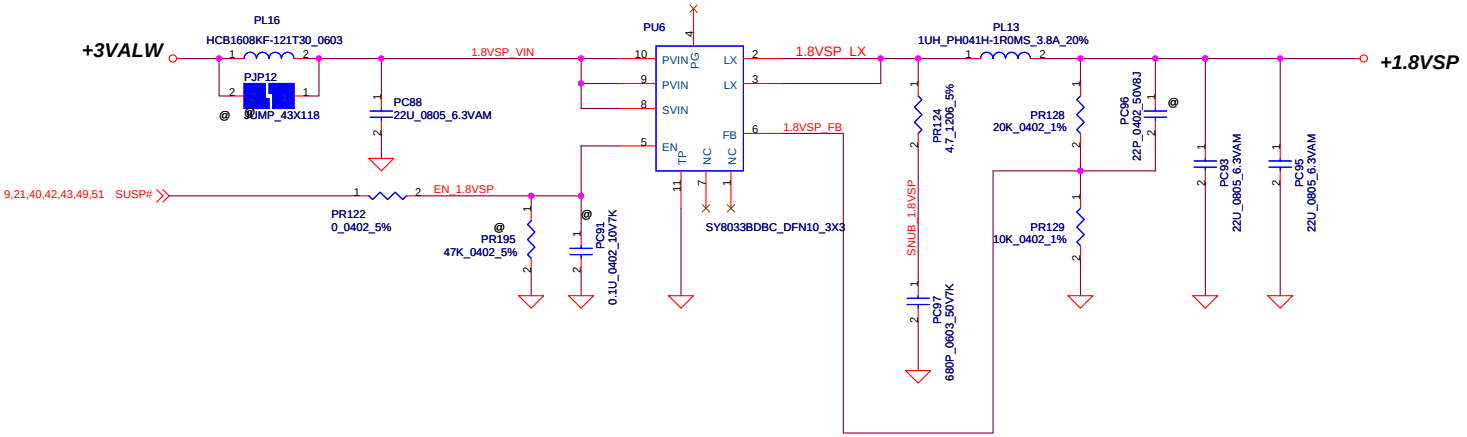

Security Classification	Compal Secret Data		
Issued Date	2008/2/5	Deciphered Date	2008/6/05

THIS SHEET OF ENGINEERING DRAWING IS THE PROPRIETARY PROPERTY OF COMPAL ELECTRONICS, INC. AND CONTAINS CONFIDENTIAL AND TRADE SECRET INFORMATION. THIS SHEET MAY NOT BE TRANSFERED FROM THE CUSTODY OF THE COMPETENT DIVISION OF R&D DEPARTMENT EXCEPT AS AUTHORIZED BY COMPAL ELECTRONICS, INC. NEITHER THIS SHEET NOR THE INFORMATION IT CONTAINS MAY BE USED BY OR DISCLOSED TO ANY THIRD PARTY WITHOUT PRIOR WRITTEN CONSENT OF COMPAL ELECTRONICS, INC.

Compal Electronics, Inc.

Title: SCHEMATIC M/B LA-8321

Size	Document Number	Rev
Custom	4019H5	B

Date: Wednesday, August 01, 2012 Sheet 50 of 66

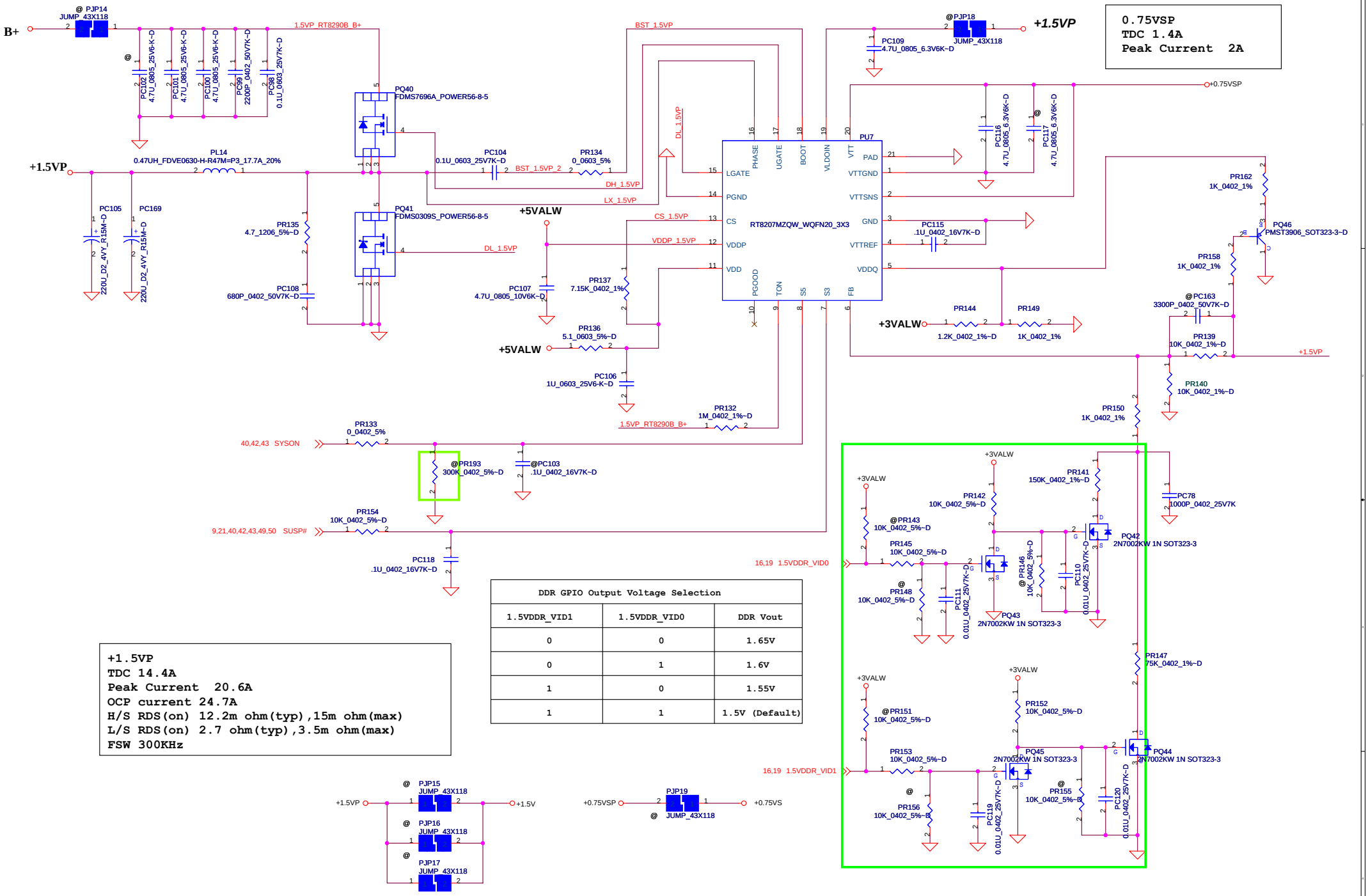

0.75VSP
TDC 1.4A
Peak Current 2A

+1.5VP
TDC 14.4A
Peak Current 20.6A
OCP current 24.7A
H/S RDS(on) 12.2m ohm(typ),15m ohm(max)
L/S RDS(on) 2.7 ohm(typ),3.5m ohm(max)
FSW 300KHz

DDR GPIO Output Voltage Selection		
1.5VDDR_VID1	1.5VDDR_VID0	DDR Vout
0	0	1.65V
0	1	1.6V
1	0	1.55V
1	1	1.5V (Default)

Security Classification	Compal Secret Data		
Issued Date	2008/2/5	Deciphered Date	2008/6/05

THIS SHEET OF ENGINEERING DRAWING IS THE PROPRIETARY PROPERTY OF COMPAL ELECTRONICS, INC. AND CONTAINS CONFIDENTIAL AND TRADE SECRET INFORMATION. THIS SHEET MAY NOT BE TRANSFERED FROM THE CUSTODY OF THE COMPETENT DIVISION OF R&D DEPARTMENT EXCEPT AS AUTHORIZED BY COMPAL ELECTRONICS, INC. NEITHER THIS SHEET NOR THE INFORMATION IT CONTAINS MAY BE USED BY OR DISCLOSED TO ANY THIRD PARTY WITHOUT PRIOR WRITTEN CONSENT OF COMPAL ELECTRONICS, INC.

Compal Electronics, Inc.

Title: SCHEMATIC M/B LA-8321

Size	Document Number	Rev
Custom	4019H5	B

Date: Wednesday, August 01, 2012 Sheet 51 of 66

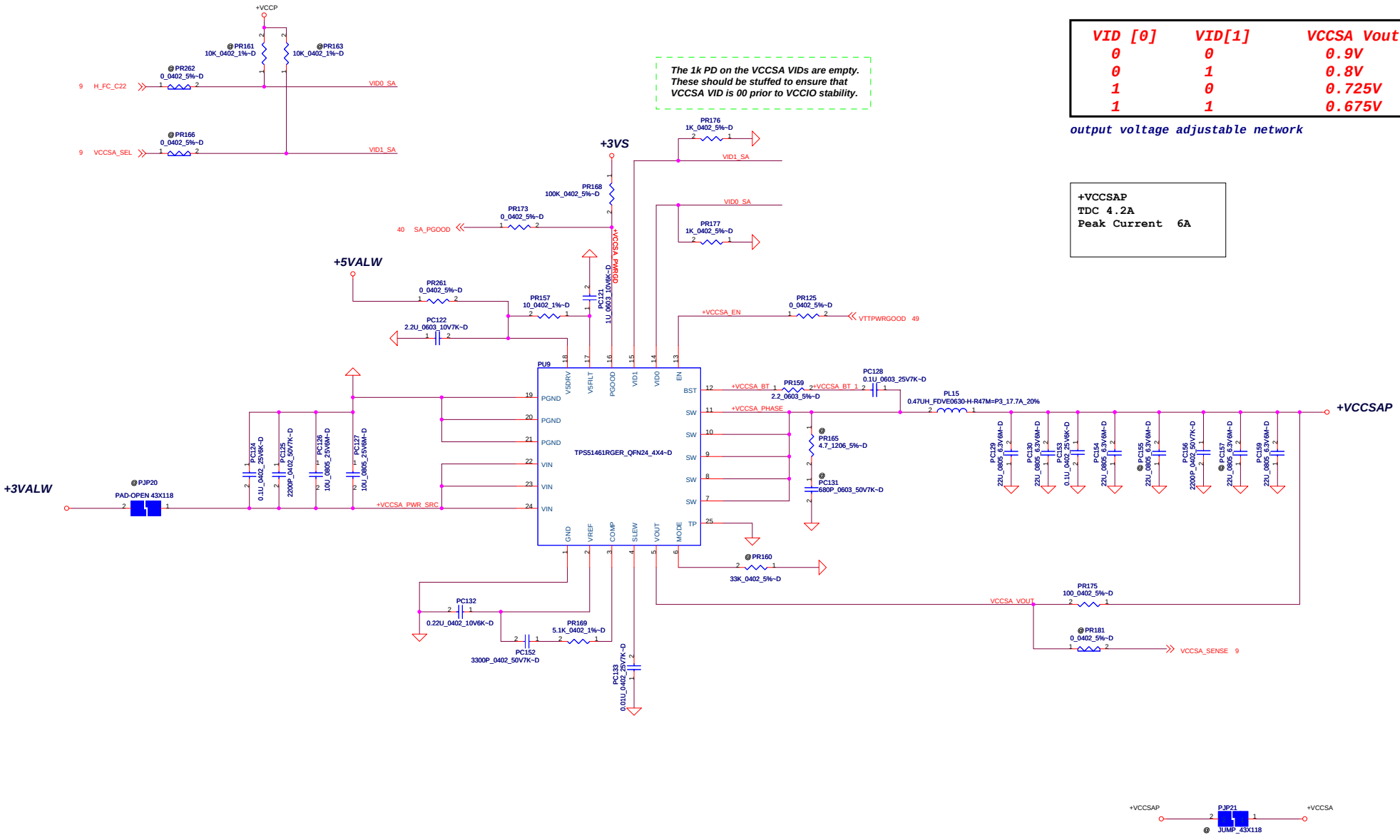

Security Classification	Compal Secret Data		
Issued Date	2009/12/01	Deciphered Date	2010/12/31

THIS SHEET OF ENGINEERING DRAWING IS THE PROPRIETARY PROPERTY OF COMPAL ELECTRONICS, INC. AND CONTAINS CONFIDENTIAL AND TRADE SECRET INFORMATION. THIS SHEET MAY NOT BE TRANSFERED FROM THE CUSTODY OF THE COMPETENT DIVISION OF R&D DEPARTMENT EXCEPT AS AUTHORIZED BY COMPAL ELECTRONICS, INC. NEITHER THIS SHEET NOR THE INFORMATION IT CONTAINS MAY BE USED BY OR DISCLOSED TO ANY THIRD PARTY WITHOUT PRIOR WRITTEN CONSENT OF COMPAL ELECTRONICS, INC.

Compal Electronics, Inc.

Title: SCHEMATIC M/B LA-8321

Size	Document Number	Rev
C	4019H5	B

Date: Wednesday, August 01, 2012 Sheet 52 of 66

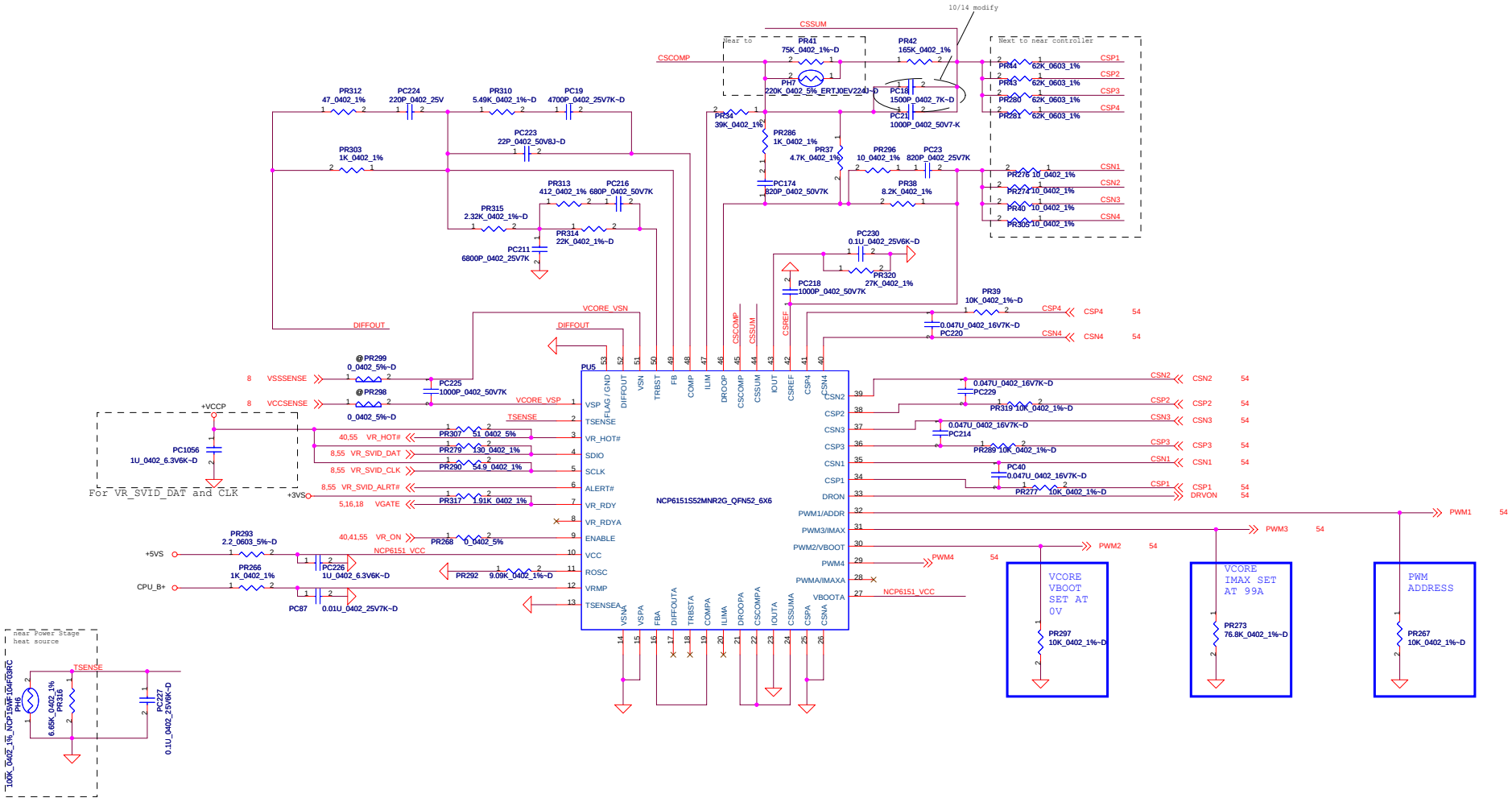

Security Classification	Compal Secret Data		Compal Electronics, Inc.
Issued Date	2009/10/09	Deciphered Date	2010/10/09

THIS SHEET OF ENGINEERING DRAWING IS THE PROPRIETARY PROPERTY OF COMPAL ELECTRONICS, INC. AND CONTAINS CONFIDENTIAL AND TRADE SECRET INFORMATION. THIS SHEET MAY NOT BE TRANSFERED FROM THE CUSTODY OF THE COMPETENT DIVISION OF R&D DEPARTMENT EXCEPT AS AUTHORIZED BY COMPAL ELECTRONICS, INC. NEITHER THIS SHEET NOR THE INFORMATION IT CONTAINS MAY BE USED BY OR DISCLOSED TO ANY THIRD PARTY WITHOUT PRIOR WRITTEN CONSENT OF COMPAL ELECTRONICS, INC.

Title	SCHEMATIC M/B LA-8321		
Size: Custom	Document Number: 4019H5		Rev: B
Date: Wednesday, August 01, 2012	Sheet 53 of 66		

VCC_core
TDC 70A
Peak Current 97.5A
OCP current 117A
Loadline = 1.9mohm

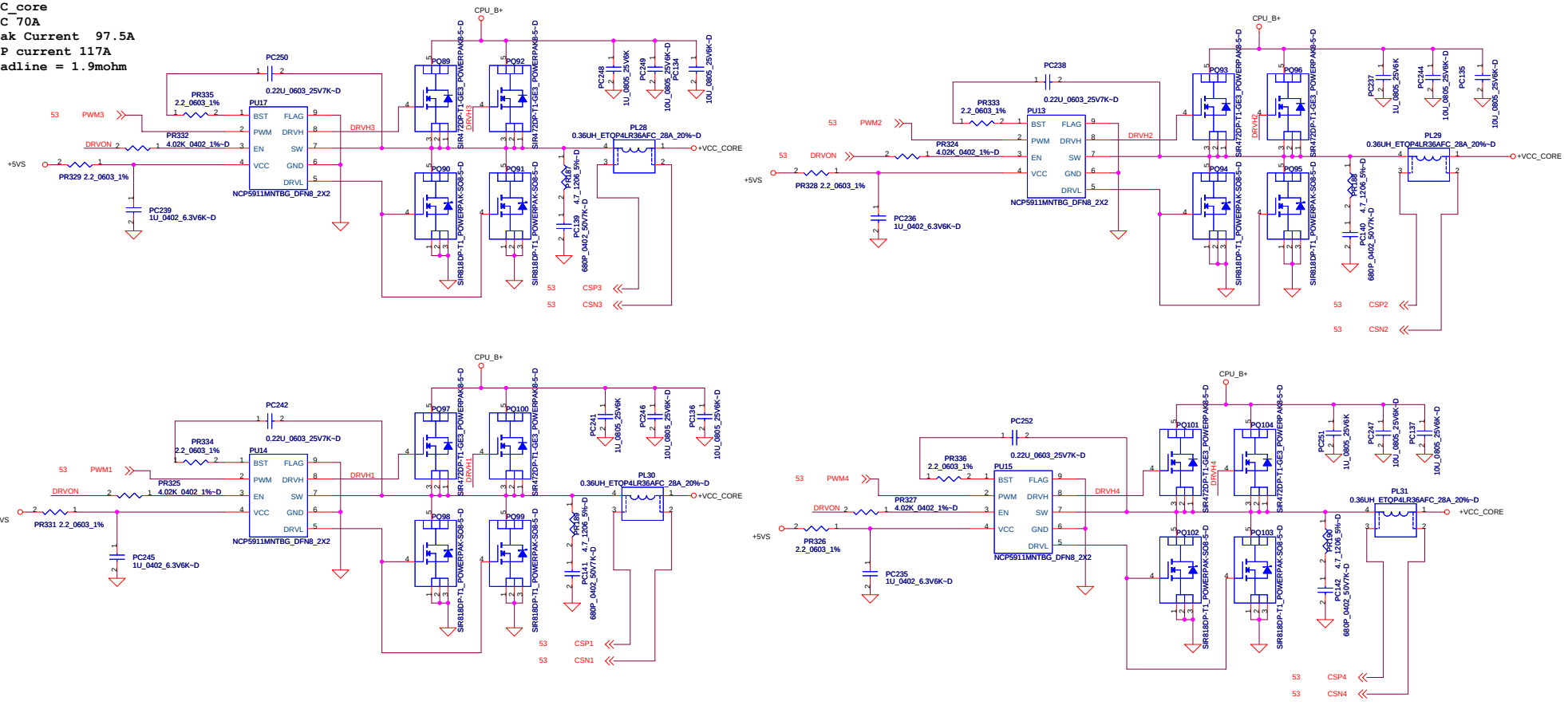

Security Classification	Compal Secret Data		
Issued Date	2009/10/09	Deciphered Date	2010/10/09

THIS SHEET OF ENGINEERING DRAWING IS THE PROPRIETARY PROPERTY OF COMPAL ELECTRONICS, INC. AND CONTAINS CONFIDENTIAL AND TRADE SECRET INFORMATION. THIS SHEET MAY NOT BE TRANSFERRED FROM THE CUSTODY OF THE COMPETENT DIVISION OF R&D DEPARTMENT EXCEPT AS AUTHORIZED BY COMPAL ELECTRONICS, INC. NEITHER THIS SHEET NOR THE INFORMATION IT CONTAINS MAY BE USED BY OR DISCLOSED TO ANY THIRD PARTY WITHOUT PRIOR WRITTEN CONSENT OF COMPAL ELECTRONICS, INC.

Compal Electronics, Inc.

Title: SCHEMATIC M/B LA-8321

Size	Document Number	Rev
Custom	4019H5	B

Date: Wednesday, August 01, 2012 Sheet 54 of 66

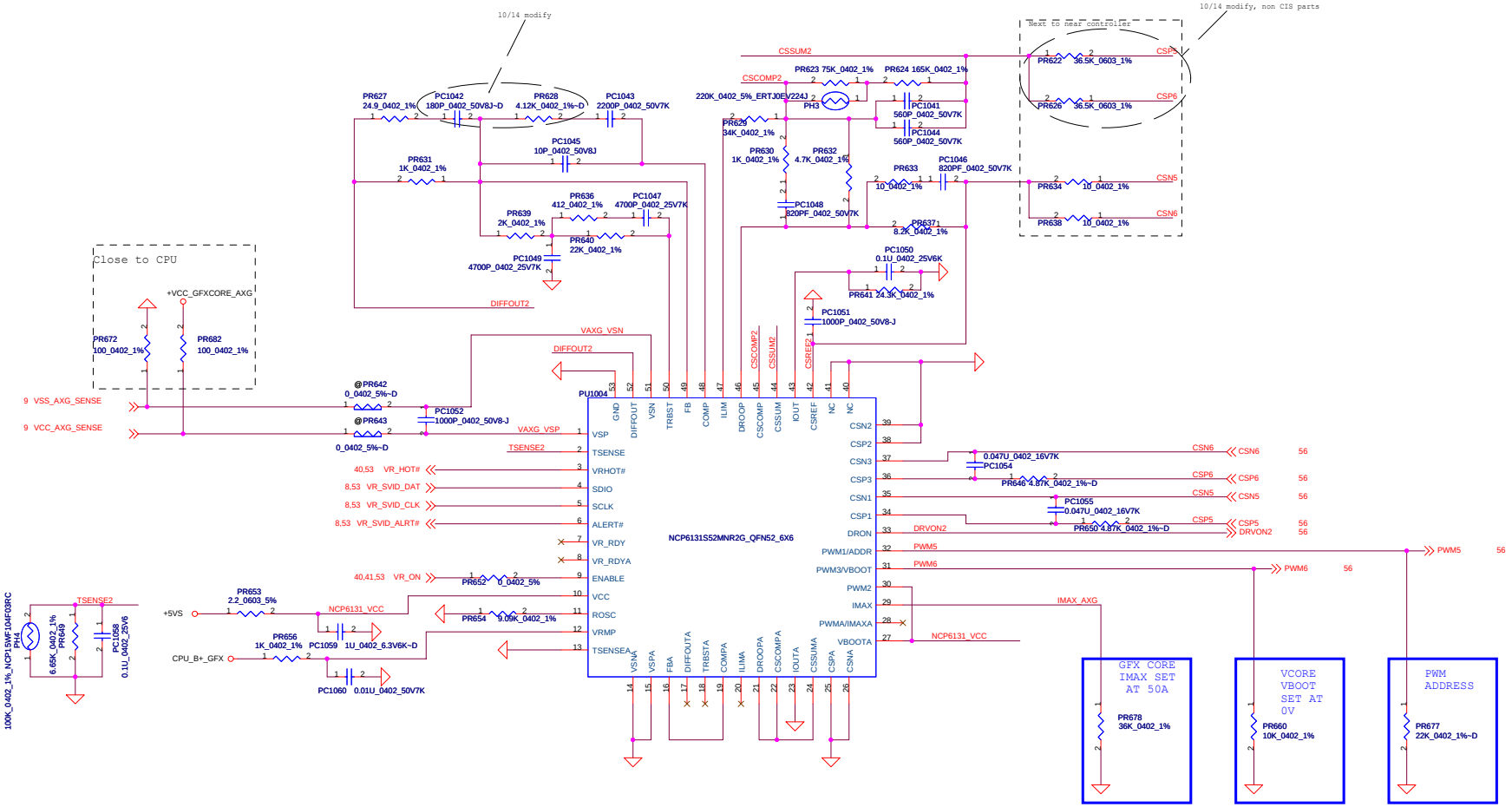

Security Classification	Compal Secret Data		Compal Electronics, Inc.
Issued Date	2011/02/08	Deciphered Date	2012/02/08

THIS SHEET OF ENGINEERING DRAWING IS THE PROPRIETARY PROPERTY OF COMPAL ELECTRONICS, INC. AND CONTAINS CONFIDENTIAL AND TRADE SECRET INFORMATION. THIS SHEET MAY NOT BE TRANSFERED FROM THE CUSTODY OF THE COMPETENT DIVISION OF R&D DEPARTMENT EXCEPT AS AUTHORIZED BY COMPAL ELECTRONICS, INC. NEITHER THIS SHEET NOR THE INFORMATION IT CONTAINS MAY BE USED BY OR DISCLOSED TO ANY THIRD PARTY WITHOUT PRIOR WRITTEN CONSENT OF COMPAL ELECTRONICS, INC.

Title	SCHEMATIC M/B LA-8321		
Size C	Document Number 4019H5		Rev B
Date: Wednesday, August 01, 2012	Sheet 55 of 66		

VCC_GFXCORE
TDC 38A
Peak Current 46A
OCP current 55A
Loadline = 3.9mohm

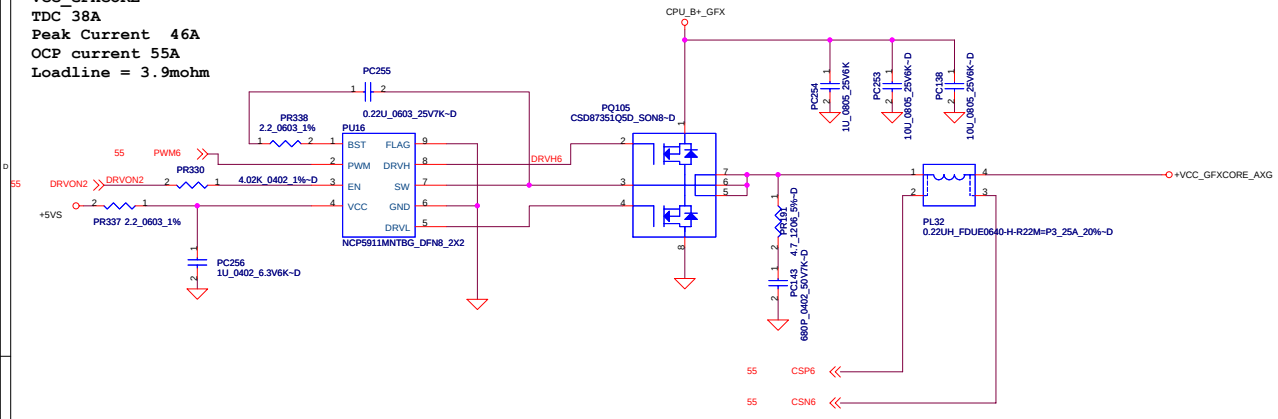

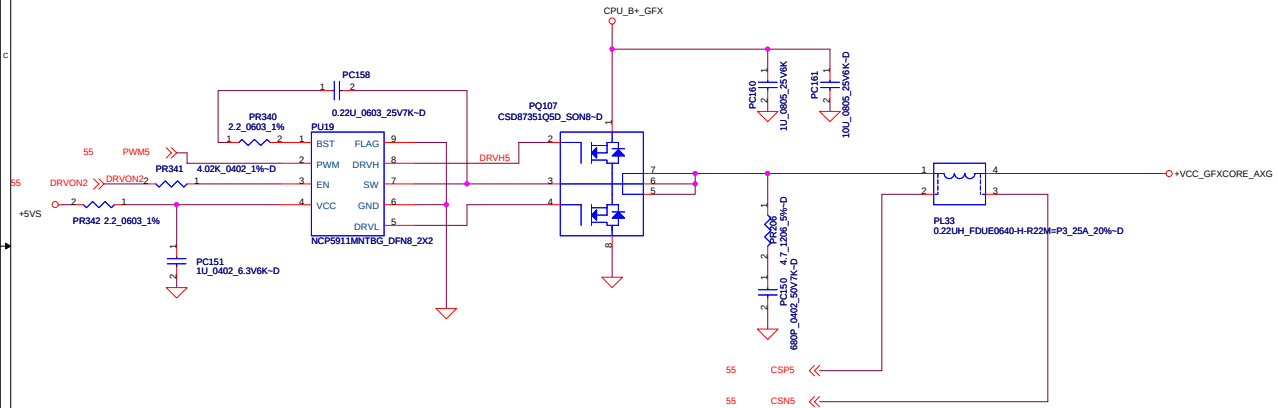

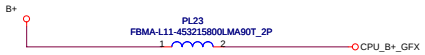

Security Classification	Compal Secret Data		Compal Electronics, Inc.
Issued Date	2011/02/08	Deciphered Date	2012/02/08

THIS SHEET OF ENGINEERING DRAWING IS THE PROPRIETARY PROPERTY OF COMPAL ELECTRONICS, INC. AND CONTAINS CONFIDENTIAL AND TRADE SECRET INFORMATION. THIS SHEET MAY NOT BE TRANSFERED FROM THE CUSTODY OF THE COMPETENT DIVISION OF R&D DEPARTMENT EXCEPT AS AUTHORIZED BY COMPAL ELECTRONICS, INC. NEITHER THIS SHEET NOR THE INFORMATION IT CONTAINS MAY BE USED BY OR DISCLOSED TO ANY THIRD PARTY WITHOUT PRIOR WRITTEN CONSENT OF COMPAL ELECTRONICS, INC.

Title	SCHEMATIC M/B LA-8321		
Size C	Document Number 4019H5		Rev B
Date: Wednesday, August 01, 2012	Sheet 56 of 66		

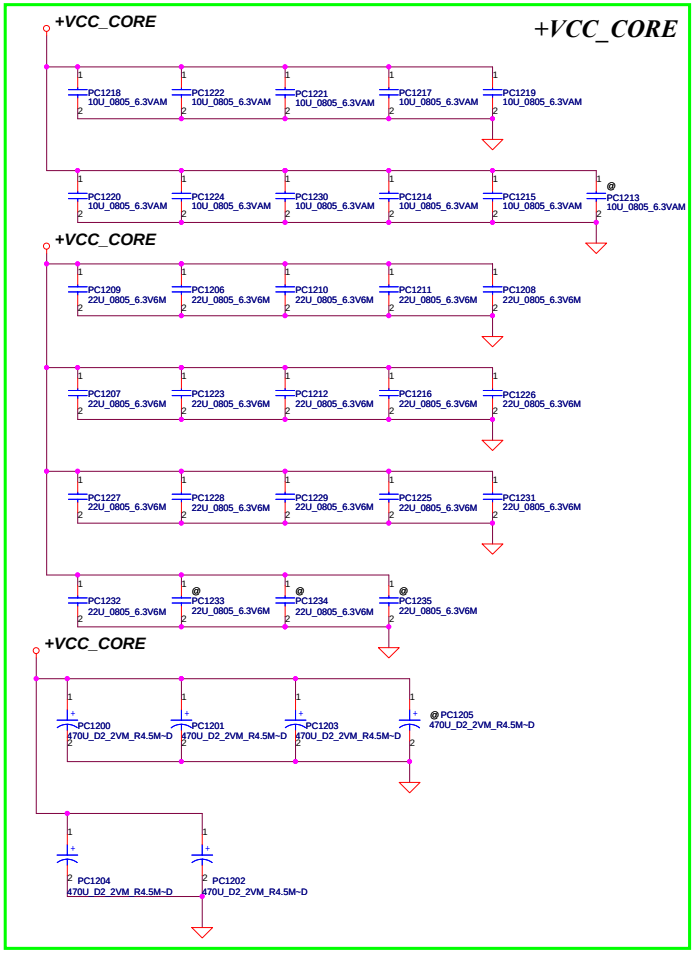

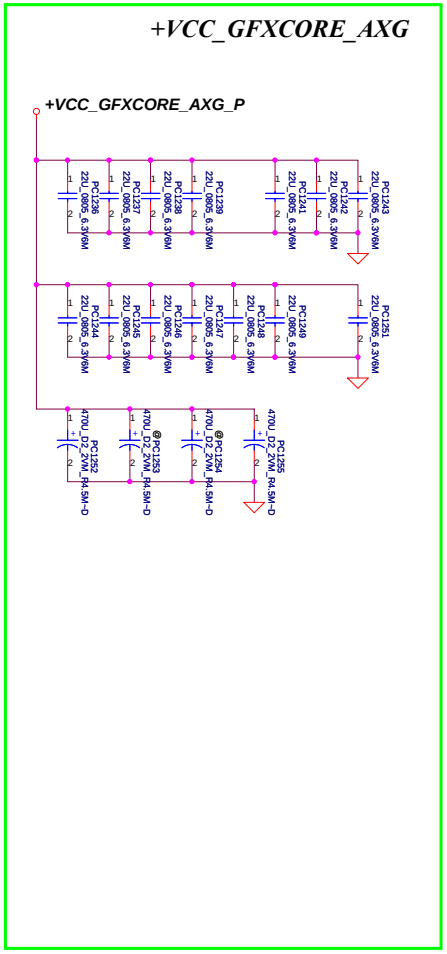

Below is 458544_CRV_PDDG_0.5 Table 5-8.

Socket Bottom	5 x 22 µF (0805) 5 x (0805) no-stuff sites
Socket Top	7 x 22 µF (0805) 2 x (0805) no-stuff sites

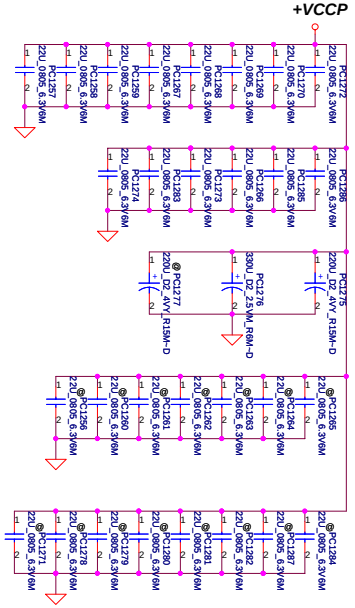

Security Classification	Compal Secret Data		
Issued Date	2008/09/15	Deciphered Date	2009/09/15

THIS SHEET OF ENGINEERING DRAWING IS THE PROPRIETARY PROPERTY OF COMPAL ELECTRONICS, INC. AND CONTAINS CONFIDENTIAL AND TRADE SECRET INFORMATION. THIS SHEET MAY NOT BE TRANSFERED FROM THE CUSTODY OF THE COMPETENT DIVISION OF R&D DEPARTMENT EXCEPT AS AUTHORIZED BY COMPAL ELECTRONICS, INC. NEITHER THIS SHEET NOR THE INFORMATION IT CONTAINS MAY BE USED BY OR DISCLOSED TO ANY THIRD PARTY WITHOUT PRIOR WRITTEN CONSENT OF COMPAL ELECTRONICS, INC.

Compal Electronics, Inc.

Title: SCHEMATIC M/B LA-8321

Size | Document Number: 4019H5 | Rev: B

Date: Wednesday, August 01, 2012 | Sheet 57 of 66

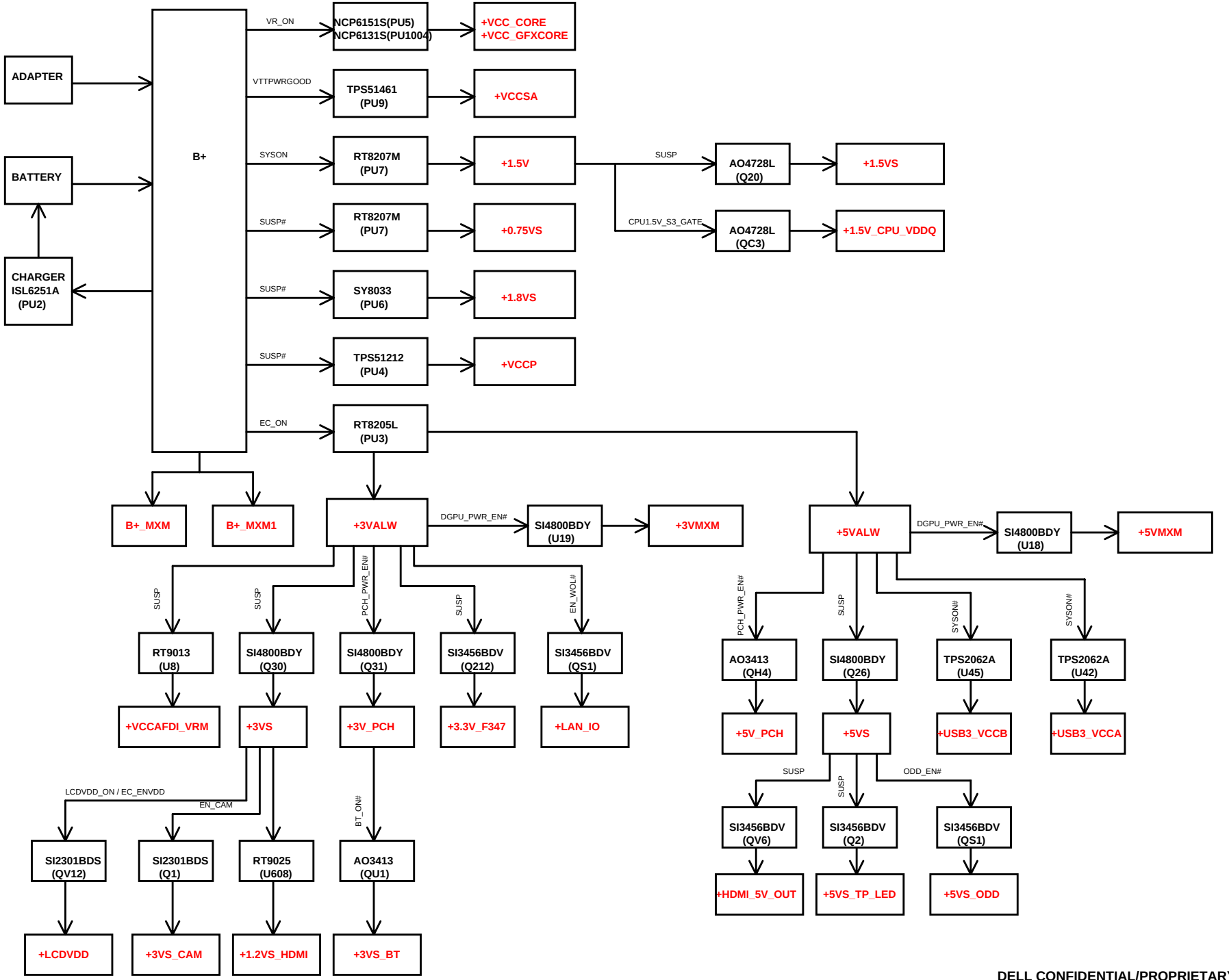

DELL CONFIDENTIAL/PROPRIETARY

PROPRIETARY NOTE: THIS SHEET OF ENGINEERING DRAWING AND SPECIFICATIONS CONTAINS CONFIDENTIAL TRADE SECRET AND OTHER PROPRIETARY INFORMATION OF DELL INC. ("DELL") THIS DOCUMENT MAY NOT BE TRANSFERRED OR COPIED WITHOUT THE EXPRESS WRITTEN AUTHORIZATION OF DELL. IN ADDITION, NEITHER THIS SHEET NOR THE INFORMATION IT CONTAINS MAY BE USED BY OR DISCLOSED TO ANY THIRD PARTY WITHOUT DELL'S EXPRESS WRITTEN CONSENT.

Compal Electronics, Inc.

Title: SCHEMATIC M/B LA-8321

Size: | Document Number: 4019H5 | Rev: B

Date: Wednesday, August 01, 2012 | Sheet 58 of 66

Version Change List (P. I. R. List) Page 1

Item	Page#	Title	Date	Request Owner	Issue Description	Solution Description	Rev.
1	52	PWR-VCCSA_COREP	10/05	Alan	SMT NC part (PR262)	BOM structure change to "Do Not Display"	X01
2	45	BATTERY CONN/OTP	10/13	Alan	EC detect the battery is insertion when only adapter in	BATT_PRS pull high from +3VALW to +3VALW_EC	
3	53	CPUCORE1	10/14	Alan	For Intel VCORE test	Change PC18=1500P	X01
4	55	GFXCORE1	10/14	Alan	For Intel Vgfx test	Change PC1042=180P, PR628=4.12K, PC1041=560P, PR622=PR626=36.5K	X01
5	47	CHARGER	10/17	Alan	For charger voltage and current setting	Change PR71=68.1K, PR75=12.7K, PR182=1.43K, PR45=0.005	X01
6	48, 51	3VALWP/5VALWP, +1.5VP/0.75VSP	10/17	Alan	Find tune OC setting	Change PR86 =57.6K, PR87 =93.1K, PR137 =7.15K	X01
7	45,46	DCIN/DECTOR	10/25	Alan	"US California Energy Efficiency" (Reserve 130mW for no battery mode)	Refer to page 45 PR170, PR171 and page 46 modify	X01
8	46, 47	CHARGER	11/11	Alan	NC revise parts	NC: PD6, PQ23,PQ68, PD11, PD12, PQ20,	X01
9	**	ALL	11/11	Alan	Change source for affected by "Thailand flood"	Refer to PT-Build_SMT MEMO	X01
10	**	ALL	12/13	Alan	Change 0 ohm to short pad PR5, PR196, PR186, PR185, PR300, PR46, PR112, PR262, PR298, PR299, PR642, PR643		X01
11	50	1.8VSP	12/14	Alan	PL13 footprint is too small to find the 2nd source	Change PL13 footprint for 2nd source	X01
12	48,54,56	DCIN/DECTOR	12/23	Alan	PL18, PL22, PL23 footprint DFB modify to larger size	PL18, PL22, PL23 update CIS PART	X02
13	47	DCIN/DECTOR	12/24	Alan	Revise PR164 for EE Jeffy request		X02
14	45	OTP Value modify	01/11	Alan	CPU OTP caculate and test value 93C not mach with schematic 90C	Double check with thermal team and agree change to 93C	X02
15	46	P46-PWR-DCIN/DECTOR	02/01	Alan	Power and EE main part is different, factory request to moidfied it	Change PQ5 to SB000008P0L as main source	A00
16	46	P46-PWR-DCIN/DECTOR	02/02	Alan	Platform is required to consume 4mA above at 19.5V in AC mode without battery attached.	Add PR111 for lot 6 hiccup mode issue (3.78mA+1mA=4.78mA)	A00
17	45, 52	DCIN/DECTOR, VCCSAP	02/16	Alan	Reduce revise 0 ohm (B+_BIAS enable, VCCSA_SENSE)	Change PR16, PR181 to short 0 ohm	A00
18	48	3VALWP/5VALWP	02/29	Alan	HDMI fail cause the 5V voltage drop to connecter only 4.7V	Change PR83 from 30K to 30.9K ohm voltage from 5.05V to 5.15V	A00

THIS SHEET OF ENGINEERING DRAWING IS THE PROPRIETARY PROPERTY OF COMPAL ELECTRONICS, INC. AND CONTAINS CONFIDENTIAL AND TRADE SECRET INFORMATION. THIS SHEET MAY NOT BE TRANSFERED FROM THE CUSTODY OF THE COMPETENT DIVISION OF R&D DEPARTMENT EXCEPT AS AUTHORIZED BY COMPAL ELECTRONICS, INC. NEITHER THIS SHEET NOR THE INFORMATION IT CONTAINS MAY BE USED BY OR DISCLOSED TO ANY THIRD PARTY WITHOUT PRIOR WRITTEN CONSENT OF COMPAL ELECTRONICS, INC.

Compal Electronics, Inc.

Title: SCHEMATIC M/B LA-8321

Size: | Document Number: 4019H5 | Rev: B

Date: Wednesday, August 01, 2012 | Sheet 59 of 66

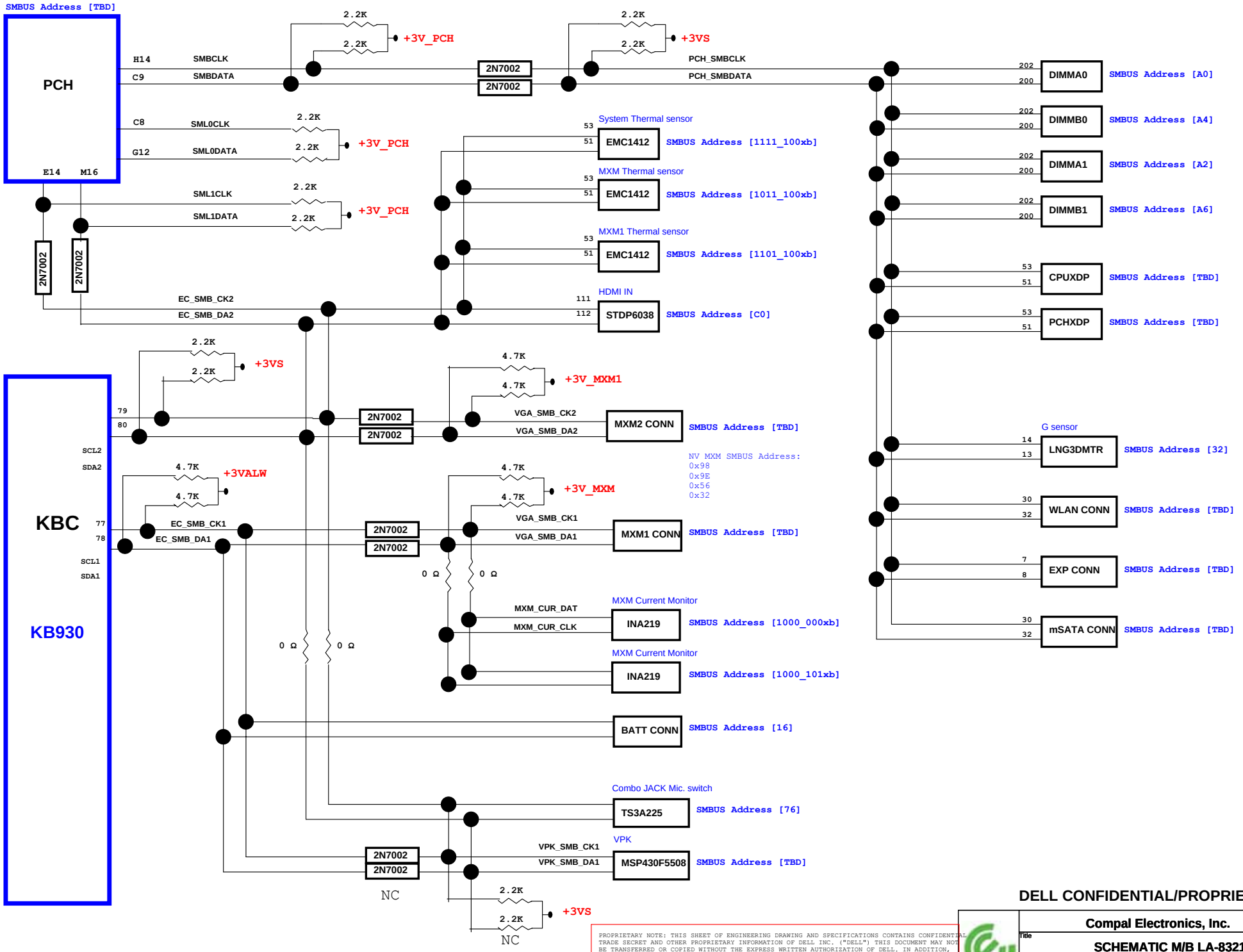

DELL CONFIDENTIAL/PROPRIETARY

PROPRIETARY NOTE: THIS SHEET OF ENGINEERING DRAWING AND SPECIFICATIONS CONTAINS CONFIDENTIAL TRADE SECRET AND OTHER PROPRIETARY INFORMATION OF DELL INC. ("DELL") THIS DOCUMENT MAY NOT BE TRANSFERRED OR COPIED WITHOUT THE EXPRESS WRITTEN AUTHORIZATION OF DELL. IN ADDITION, NEITHER THIS SHEET NOR THE INFORMATION IT CONTAINS WAY BE USED BY OR DISCLOSED TO ANY THIRD PARTY WITHOUT DELL'S EXPRESS WRITTEN CONSENT.

Compal Electronics, Inc.	
Title	SCHEMATIC M/B LA-8321
Size	Document Number 4019H5 Rev B
Date: Wednesday, August 01, 2012	Sheet 60 of 66

Version Change List (P. I. R. List)

Item	Page#	Title	Date	Request Owner	Issue Description	Solution Description	Rev.
1	34	SATA HDD	2011/10/4	Compal	HDD EA fial	Add HDD re-driver *3, Add RS11~RS37, US1~US3, CS51~CS68	X01
2	35	WLAN	2011/10/4	Compal	LPC pin assignment error for 80 port	Re-assignment pin	X01
3	40	EC	2011/10/10	Compal	There are double power source for EC	Depop R464	X01
4	40, 18	PCH, EC	2011/10/10	Compal	correct net name for not support deep S4/S5	Change net name from SUSWARN# to SUSPWRDNACK, Change net name from SUSWARN#_R to SUSPWRDNACK_R	X01
5	28	DP SW	2011/10/10	Compal	DP no function, because double CAP for MUX	Delete C1069, C1070, C1071, C1072, C1073, C1074, C1075, C1076, C1079, C1109, C1127, C1128, C1138, C1139, C1140, C1141, C1203, C1204, C1205, C1206	X01
6	40	EC	2011/10/10	Compal	Change board ID to V0.2	Change R466 from 0 ohm to 8.2K ohm	X01
7	17	PCH	2011/10/11	Compal	Sourcer require change crystal size to 3225	Change YH2 PN to SJ10000EF00	X01
8	31	GLAN	2011/10/11	Compal	Sourcer require change crystal size to 3225	Change YL1 PN to SJ10000EF00	X01
9	44	VPK	2011/10/11	Compal	Sourcer require change crystal size to 3225	Change YH3 PN to SJ10000DI00	X01
10	16	PCH	2011/10/11	Compal	Sourcer require change crystal size to 3215	Change YH1 PN to SJ10000DM00	X01
11	40	EC	2011/10/11	Compal	Sourcer require change crystal size to 3215	Change X1 PN to SJ10000DM00	X01
12	30	HDMI IN	2011/10/11	Compal	Sourcer require change crystal size to 3225	Change Y5 PN to SJ10000970L	X01
13	30	HDMI IN	2011/10/11	Compal	Follow Vandor feedback modify CAP value of crystal	Change C1751, C1750 from 27P to 12P	X01
14	27	HDMI SW	2011/10/11	Compal	HDMI eye diagram fail	Add R2600, pop R1855, R1857	X01
15	34	SATA HDD	2011/10/12	Compal	Add SATA re-driver co-lay circuit	Add RS38~RS49, CS69~CS80	X01
16	5	PCH	2011/10/13	Compal	PM_DRAM_PWRGD have glitch and leakage	Change RC18 from 200 ohm to 10k ohm	X01
17	44	VPK	2011/10/14	Compal	Depop VPK function	Depop CD75, C2011~C2015, RH137, CH100, CH101, YH3, R2, R227, R1607, R1578 C294, C1754, C1755, F6, R198, C1753, R197, R1823~R1825, R1837~R1840, R1843	X01
18	44	VPK	2011/10/14	Compal	Sourcer require change arreay resister to single	Delete RP1~RP6, add R2601~R2624	X01
19	40	EC	2011/10/14	Compal	Sourcer require change arreay resister to single	Delete RP7~RP12, add R2625~R2648	X01
20	19	PCH	2011/10/14	Compal	Sourcer require change arreay resister to single	Delete RPH1~RPH5, add RH267~RH285	X01
21	34	SATA HDD	2011/10/18	Compal	Delete HDD3 SATA re-driver circuit	Delete RS42~RS45, CS73~CR76, RS20~RS28, CS57~CS62, US2	X01
22	27	HDMI SW	2011/10/19	Compal	Intel feedback change HDMI DDC pull high resister value	Change R437, R438, R461, R462 from 4.7k ohm to 2.2k ohm	X01
23	27	HDMI SW	2011/10/19	Compal	Intel feedback change HDMI HPD implementation	Depop Q264, R1741, R1742, C1058, R1743, add R2652	X01

DELL CONFIDENTIAL/PROPRIETARY

PROPRIETARY NOTE: THIS SHEET OF ENGINEERING DRAWING AND SPECIFICATIONS CONTAINS CONFIDENTIAL TRADE SECRET AND OTHER PROPRIETARY INFORMATION OF DELL INC. ("DELL") THIS DOCUMENT MAY NOT BE TRANSFERRED OR COPIED WITHOUT THE EXPRESS WRITTEN AUTHORIZATION OF DELL. IN ADDITION, NEITHER THIS SHEET NOR THE INFORMATION IT CONTAINS WAY BE USED BY OR DISCLOSED TO ANY THIRD PARTY WITHOUT DELL'S EXPRESS WRITTEN CONSENT.

Version Change List (P. I. R. List)

Item	Page#	Title	Date	Request Owner	Issue Description	Solution Description	Rev.
24	29	DMC SW	2011/10/19	Compal	Intel feedback change DMC HPD implementation	Delete R1236, R1237, Add R2649	X01
25	29	DMC SW	2011/10/19	Compal	Intel feedback add DMC AUX PU/PD resister	Add R2650, R2651	X01
26	9	CPU	2011/10/19	Compal	Modify CPU DDR Vref circuit	Delete QC5, RC76, RC77, change RC118 connect from +1.5V to +1.5V_CPU_VDDQ	X01
27	22	PCH	2011/10/19	Compal	Intel feedback follow PDDG	Delete LH4, depop CH73	X01
28	22	PCH	2011/10/19	Compal	Intel feedback follow PDDG	Delete RH224, RH225, RH227	X01
29	21	PCH	2011/10/19	Compal	Intel feedback follow PDDG	Change LH9 to RH287 (0 ohm)	X01
30	20	PCH	2011/10/19	Compal	Intel feedback follow PDG	Pop RH181, Add RH286	X01
31	33	Audio Amplifier	2011/10/20	Compal	Audio Amplifier burned issue	Add D74, D75, C2035, C2036	X01
32	33	Audio Amplifier	2011/10/21	Compal	Audio Amplifier burned issue	Change C932, C1102 connect from B+ to +AMP_VDD	X01
33	32	Audio Jcak	2011/10/21	Compal	Change JHP2 connector	Change JHP2 footprint to SINGA_2SJ3062-000111F_6P-T	X01
35	5	XDP	2011/10/21	Compal	Depop CPU XDP	Depop RC84~RC95, RC5~RC9, RC112, RC113, CC65, CC66	X01
36	16	XDP	2011/10/21	Compal	Depop PCH XDP	Depop RH1, RH3~RH10, RH12~RH21, RH24, RH51, CH1	X01
37	20, 26	PCH, CRT	2011/10/21	Compal	CRT leakage	Depop RH178, add RV115	X01
38	32	Audio Jcak	2011/10/22	Compal	Change JHP2 connector from NC to NO	Change JHP2 symbol, add RA24, depop R149, QU4	X01
39	29	DMC SW	2011/10/22	Compal	DMC AUX channel pu/pd location error	Change R2650, R2651 connect from U132 to CONN	X01
40	32	AUDIO	2011/10/22	Compal	Reserve for pop noise	Add RA25~RA27, change U631 and U629 pin B2 connect to +3.3V_MUTE	X01
41	34	ODD	2011/10/24	Compal	Zero power ODD function	Pop RS10	X01
42	28	DP SW	2011/10/24	Compal	Vendor feedback DP MUX need CAP for input and output	Add C1069, C1070, C1071, C1072, C1073, C1074, C1075, C1076, C1079, C1109, C1127, C1128, C1138, C1139, C1140, C1141, C1203, C1204, C1205, C1206 Change C1190~C1194, C1164, C1177, C1178, C1200, C1201 to 220nF	X01
43	25	CCD	2011/10/24	Compal	Reserve for EMI	Add L101, depop RV10, RV51, change D61 connect to onnector side	X01
44	28	DP SW	2011/10/24	Compal	DP dongle can't display on UMA mode	Change U633, delete C1200, C1201, add U634, C2037, C2038 Change C1203~C1206 from 0.22uF to 0.1uF Change AUX, DDC, HDP connect	X01
45	43	PWR BTN	2011/10/24	Compal	Avoid SW reverse at SMT	NC SW1 pin 1 & pin 4 and SW2 pin 1 & pin 4	X01
46	30	HDMI IN	2011/10/24	Compal	(STDP6038) doesn't need to read / write the panel EDID	de-pop R1880, R1881	X01

DELL CONFIDENTIAL/PROPRIETARY

PROPRIETARY NOTE: THIS SHEET OF ENGINEERING DRAWING AND SPECIFICATIONS CONTAINS CONFIDENTIAL TRADE SECRET AND OTHER PROPRIETARY INFORMATION OF DELL INC. ("DELL") THIS DOCUMENT MAY NOT BE TRANSFERRED OR COPIED WITHOUT THE EXPRESS WRITTEN AUTHORIZATION OF DELL. IN ADDITION, NEITHER THIS SHEET NOR THE INFORMATION IT CONTAINS WAY BE USED BY OR DISCLOSED TO ANY THIRD PARTY WITHOUT DELL'S EXPRESS WRITTEN CONSENT.

Version Change List (P. I. R. List)

Item	Page#	Title	Date	Request Owner	Issue Description	Solution Description	Rev.
47	30	HDMI IN	2011/10/24	Compal	keep I2S_DAT/SPDIF_IN has fine performance	change R1882 to C2039 0.1UF	X01
48	30	HDMI IN	2011/10/24	Compal	reserver these soltion to avoid I2S_DAT/SPDIF_IN signal has attenuation problem duo to long trance	add U635, C2040	X01
49	32	Audio	2011/10/24	Compal	change combo jack dection method	de-pop R2585, pop R1244	X01
50	32	AUDIO	2011/10/24	Compal	Reserve for pop noise	Add C2041	X01
51	32	AUDIO	2011/10/24	Compal	JACK_PLUG funcion reverse duo to JACK change to normal open type	add R2653 and QU8	X01
52	32	AUDIO	2011/10/24	Compal	vendor suggestion	change R1752 to C2042 0.1UF	X01
53	32	AUDIO	2011/10/25	Compal	change combo jack dection circuit	pop R149, QU4, depop RA24, change QU8 connect	X01
54	32	AUDIO	2011/10/25	Compal	HP fast plug in/out issue	change RC107, RC114 to 1k ohm and pop	X01
55	32	AUDIO	2011/10/25	Compal	pop noise issue	change RA20, RA21 to 0 ohm	X01
56	32	AUDIO	2011/10/26	Compal	pop noise issue	change RA22, RA23 to 0 ohm	X01
57	43	USB3.0	2011/10/26	Compal	base on EA result, depop MB usb3.0 re-driver	change C205~C208 to 0 ohm (R2654~R2657) and pop, pop C209~C212, R358~365 depop C100, C111~C113, C140, C156, C186, C187, C194~C196, C200, C2025~C2028, R374, R375, R378, R379, R416~R418, R421, U630, U632	X01
58	43	PWR BTN	2011/10/26	Compal	"US California Energy Efficiency" (Reserve 130mW for no battery mode)	Add Q305, Q306, R2658	X01
59	5	XDP	2011/10/26	Compal	Depop CPU XDP	Depop RC23~RC24, RC30~RC31, RC33~RC34, RC36~RC39	X01
60	32	AUDIO	2011/10/26	Compal	HP fast plug in/out issue	change RC109, RC115 to 1k ohm and pop	X01
61	29	DMC	2011/10/26	Compal	Reserve for DMC card	Add R2659	X01
62	29	DMC	2011/10/26	Compal	add ESD protect for DMC card	change Q302 to SB00000EN00	X01
63	26	CRT	2011/10/27	Compal	rise and fall time fail	change LV1~LV3 from 75 ohm to 47 ohm	X01
64	32	Audio	2011/10/27	Compal	audio THD+N fail	change C11, C14 to 2.2uF 0805 16V	X01
65	40	EC	2011/11/09	Compal	For Erp lot 6, reduce power consumption on S5 mode	change R483, R493 from 10K to 100K ohm	X01
66	26	CRT	2011/11/09	Compal	For EMI test fail	change LV1~LV3 from 47 ohm to 60 ohm	X01
67	42	DC-DC	2011/11/09	Compal	For PCH_PWR_EN leakage	depop R556, pop R553	X01
68	28	DP	2011/11/25	Compal	DP can't hot plug issue	depop R2261 and R2262	X01

DELL CONFIDENTIAL/PROPRIETARY

PROPRIETARY NOTE: THIS SHEET OF ENGINEERING DRAWING AND SPECIFICATIONS CONTAINS CONFIDENTIAL TRADE SECRET AND OTHER PROPRIETARY INFORMATION OF DELL INC. ("DELL") THIS DOCUMENT MAY NOT BE TRANSFERRED OR COPIED WITHOUT THE EXPRESS WRITTEN AUTHORIZATION OF DELL. IN ADDITION, NEITHER THIS SHEET NOR THE INFORMATION IT CONTAINS WAY BE USED BY OR DISCLOSED TO ANY THIRD PARTY WITHOUT DELL'S EXPRESS WRITTEN CONSENT.

Version Change List (P. I. R. List)

Item	Page#	Title	Date	Request Owner	Issue Description	Solution Description	Rev.
69	34	HDD	2011/11/25	Compal	SATA EA test fail	pop RS13, RS14, RS31, RS32	X01
70	24	LCD	2011/11/30	Compal	LCD EA test fail	Change RV32 from 100 ohm to 47 ohm	X01
71	26	CRT	2011/11/30	Compal	CRT EA test fail	Change LV4, LV5 from bead to 0 ohm, CV24, V25 from 10P to 4.7P	X01
72	33	Audio	2011/11/30	Compal	Audio amplifier fine tune	Change R929, R939 from 16.5k ohm to 20.5k ohm, R1195 from 10k ohm to 14k ohm	X01
73	16	Crystal	2011/11/30	Compal	Crystal fine tune	Change CH2 from 18P to 15P	X01
74	17, 40	PCH, EC	2011/12/08	Compal	Chang KB_DET# from PCH to EC (pin 34)	Chang KB_DET# from PCH to EC (pin 34), DEL R1733, add R2660	X02
75	32	Audio	2011/12/08	Compal	S3/S4/S5/G3 have noise when insert external speaker	Add QA1, RA28, RA29	X02
76	40	EC	2011/12/08	Compal	"US California Energy Efficiency"	Add R2661, Q307	X02
77	34	ODD	2011/12/08	Compal	ADD pull down resister for ODD_EJEECT#	Add RS50	X02
78	34	ODD	2011/12/13	Compal	Reduce 0 ohm	delete RS6	X02
79	All	All	2011/12/13	Compal	Reduce 0 ohm	change 0 ohm to short pad	X02
80	32	Audio	2011/12/13	Compal	change HP mute IC's power rail to +3VALW	change HP mute IC's power rail to +3VALW, pop RA27, depop RA25	X02
81	43	IO CONN	2011/12/14	Compal	add +5V_ALW pin for USB	change JIO1 pin 13 to +5VALW, pin 14 to ground	X02
82	40 44	SMBus	2011/12/15	Compal	Battery can't charge when with N13-GS MXM card	add R2662, R2663, depop R2583, R2584, Q304, Change R470, R473 to 4.7k	X02
83	16-23	PCH	2011/12/16	Compal	change PCH to QS sample	change UH4 part number to SA00005AG1L	X02
84	40	EC	2011/12/16	Compal	Change board ID to V0.3	Change R466 from 8.2K ohm to 18K ohm	X02
85	32	Audio	2011/12/19	Compal	Modify line-in circuit	Change R2550 connect to LINEIN_L_L1	X02
86	19	PCH	2011/12/19	Compal	nVIDIA N-13 GE can't detect	Change UH5 to SN74AHC1G08DCKR, RH230 to 0 ohm, depop R1908, pop RH231	X02
87	43	USB 3.0	2011/12/20	Compal	delete USB 3.0 redriver and co-lay circuit	delete U630, U632, C100, C111~C113, R1844, R1845, R424, R411~R418, R374, R375, R378, R379, R4, R5, R12, R17, R25, R30, R32, R35, R44~R53, R63, R66, R67, R81, R83 R108, R190, R195, R290, R313, R314, R323, R326, R337, R421, R358~R365, R2654~R2657, C140, C156, C186, C187, C2025~C2028, C194~C196, C200, C209~C212	X02
88	32	Audio	2011/12/22	Compal	iPHONE's mic can't recording	depop R8, R9	X02
89	43	USB 3.0	2011/12/22	Compal	delete USB 3.0 redriver and co-lay circuit	delete C209~C212	X02
90	30	HDMI IN	2012/01/02	Compal	HDMI IN debug function	pop R1650, R1651	X02
91	35	BT	2012/01/03	Compal	can't disable bt of combo card	change RE42 to 0 ohm, add RE43, connect BT_RADIO_DIS# to JWLAN pin 51	X03

DELL CONFIDENTIAL/PROPRIETARY

PROPRIETARY NOTE: THIS SHEET OF ENGINEERING DRAWING AND SPECIFICATIONS CONTAINS CONFIDENTIAL TRADE SECRET AND OTHER PROPRIETARY INFORMATION OF DELL INC. ("DELL") THIS DOCUMENT MAY NOT BE TRANSFERRED OR COPIED WITHOUT THE EXPRESS WRITTEN AUTHORIZATION OF DELL. IN ADDITION, NEITHER THIS SHEET NOR THE INFORMATION IT CONTAINS WAY BE USED BY OR DISCLOSED TO ANY THIRD PARTY WITHOUT DELL'S EXPRESS WRITTEN CONSENT.

Version Change List (P. I. R. List)

Item	Page#	Title	Date	Request Owner	Issue Description	Solution Description	Rev.
92	32 40 17	AUDIO	2012/01/03	Compal	ADD SPDIF detect pin	add net SPDIF_DET# connect JSPDIF pin 5 to EC pin 76, change R1829 connect to SPDIF_DET#, change IO_DET# to PCH gpio64, add R1737	X03
93	35	DMC	2012/01/04	Compal	double pull up	del R945	X03
94	40	board ID	2012/01/04	Compal	Change board ID to V0.4	Change R466 from 18K ohm to 33K ohm	X03
95	32	audio	2012/01/06	Compal	pop noise issue	add U632, RA30, RA31, C1874	X03
96	32	audio	2012/01/09	Compal	THD+N measure	add C1601, change RA30, RA31 to RA16 RA17 pin 2	X03
97	32	audio	2012/01/09	Compal	MIC fine turn	Change RA13 R1243 from short pad to 0 ohm	X03
98	32	audio	2012/01/11	Compal	THD+N fail	change C11, C14 to 25V X5R	X03
99	35	BT	2012/01/16	Compal	enable debug function on minicard	pop RE42, change RE43 to 1k ohm	X03
100	32	AUDIO	2012/01/17	Compal	Thailand flood impact	change C123, C129, C132, C133 to SGA00004D00	X03
101	34	ODD	2012/01/19	Compal	Follow AW14/17	change RS50 to 10K ohm	X03
102	40	board ID	2012/02/16	Compal	Change board ID to V1.0	Change R466 from 33K ohm to 56K ohm	A00
103	27	HDMI	2012/02/16	Compal	The HDMI-IN display will become white screen when the system attached HDMI then do S3/S4 back.	depop R1919, R1920	A00
104	32	audio	2012/02/16	Compal	reserve pull low resister for EAPD#	add R1218 and depop	A00
105	40	KB	2012/02/16	Compal	reduce 0 ohm	change R2625~R2648 to short pad	A00
106	34	M-SATA	2012/02/16	Compal	reduce m-sata 3vs ripple	change JP2 pin 19 and pin 20 to 3VS	A00
107	43	switch	2012/02/16	Compal	depop SW for MP	depop SW1 and SW2	A00
108	32~35 26 30 44	all	2012/02/20	Compal	reduce 0 ohm	change RA13, R1243, R1568, LV4, LV5, RE42, R1650, R1651, R2662, R2663, RS11~RS14, RS18, RS19, RS29~RS32, RS36, RS37 to short pad	A00
109	14 15	MXM	2012/02/21	Compal	Add ESD protect part for MXM	add D76~D78	A00
110	32	Audio	2012/02/21	Compal	audio codec loss issue	del R1746, add L102, C153, C3, R1752, R1753, move C143, C145, C146, C147 change R1750 to 0 ohm	A00
111	16	PCH	2012/02/21	Compal	update BIOS ROM	change U1 PN to SA000039A2L	A00
112	32	Audio	2012/02/21	Compal	audio codec loss issue	del C3, move C336, add C154	A00
113	31	LAN	2012/02/24	Compal	EMI ISN issue	Change CL39 to 150pF	A00
114	32	Audio	2012/02/24	Compal	audio codec loss issue	change R1753 to L103, L3 from 4.7UH_CBC2012T4R7M to 4.7UH_LQM2MPN4R7MG0	A00

DELL CONFIDENTIAL/PROPRIETARY

PROPRIETARY NOTE: THIS SHEET OF ENGINEERING DRAWING AND SPECIFICATIONS CONTAINS CONFIDENTIAL TRADE SECRET AND OTHER PROPRIETARY INFORMATION OF DELL INC. ("DELL") THIS DOCUMENT MAY NOT BE TRANSFERRED OR COPIED WITHOUT THE EXPRESS WRITTEN AUTHORIZATION OF DELL. IN ADDITION, NEITHER THIS SHEET NOR THE INFORMATION IT CONTAINS WAY BE USED BY OR DISCLOSED TO ANY THIRD PARTY WITHOUT DELL'S EXPRESS WRITTEN CONSENT.

Version Change List (P. I. R. List)

Item	Page#	Title	Date	Request Owner	Issue Description	Solution Description	Rev.
115	32	Audio	2012/02/24	Compal	reduce 0 ohm	change RA12, RA14~RA23, RA27, RA30, RA31, R1244 to short pad	A00
116	32	Audio	2012/02/29	Compal	Audio precision fail	change C2042 to 1uF, R1727, R3 to 2.2k ohm	A00
117	16-23	PCH	2012/03/07	Compal	update PCH PN	change PCH PN to SA00005AG3L	A00

DELL CONFIDENTIAL/PROPRIETARY

PROPRIETARY NOTE: THIS SHEET OF ENGINEERING DRAWING AND SPECIFICATIONS CONTAINS CONFIDENTIAL TRADE SECRET AND OTHER PROPRIETARY INFORMATION OF DELL INC. ("DELL") THIS DOCUMENT MAY NOT BE TRANSFERRED OR COPIED WITHOUT THE EXPRESS WRITTEN AUTHORIZATION OF DELL. IN ADDITION, NEITHER THIS SHEET NOR THE INFORMATION IT CONTAINS WAY BE USED BY OR DISCLOSED TO ANY THIRD PARTY WITHOUT DELL'S EXPRESS WRITTEN CONSENT.

www.s-manuals.com