HARSCO RAIL

www.harscorail.com

TIE INSERT/EXTRACTOR
Parts Manual

MODEL:TR-10 Phase III
w/20 MPH Axles, John Deere Tier II Engine and Norfolk Southern Extractor

Catalog No. 0-3002579-0-00
June, 2006

CAUTION

- **THIS MANUAL CONTAINS VITAL INFORMATION FOR THE SAFE USE AND EFFICIENT OPERATION OF THIS MACHINE. CAREFULLY READ THIS MANUAL BEFORE USING THE MACHINE. FAILURE TO ADHERE TO THE INSTRUCTIONS COULD RESULT IN BODILY INJURY AND/OR PROPERTY DAMAGE.**

When this manual is received, record the machine serial number, engine serial number and all other information from the serial number tags in the spaces provided in the General Information Section for future reference, in case the serial number tags ever become unreadable.

A MANUAL MUST REMAIN WITH THE MACHINE. Additional or replacement manuals may be obtained by calling or writing Harsco Rail, Harsco Corporation.

All information, illustrations and specifications in this manual are based on the latest information available at the time of publication. Harsco Rail , Harsco Corporation reserves the right to make changes at any time without notice.

FACILITY LOCATIONS

415 North Main Street
Fairmont, MN
56031-1837
Tel: (507) 235-3361
Fax: (507) 235-7370

2401 Edmund Road, Box 20
Cayce-West Columbia, SC
29171-0020
Tel: (803) 822-9160
Fax: (803) 822-7471

200 South Jackson Road
Ludington, MI
49431
Tel: (231) 843-3431
Fax: (231) 843-1644

Giltway, Giltbrook
Nottingham, NG16 2GQ
England
Tel: 0115 938 7000
Fax: 0115 938 7001

4 Strathwyn Street, PO Box 5287
Brendale, Queensland 4500
Australia
Tel: 61 7 205 6500
Fax: 61 7 205 7369

Printed in U.S.A.

CALIFORNIA

Proposition 65 Warning

Diesel engine exhaust and some of its constituents are known to the State of California to cause cancer; birth defects, and other reproductive harm.

NOTICE!

This manual contains an insert with updated information for 2008 NS TR-10 models with Serial No.'s 5502818 and 5502828. The information is located at the front of this manual.

Check this information first to see if the serial number of your machine is covered by this update. Refer to the insert cover page for the listing of machine serial numbers. Also included in this insert, is a listing of the affected assembly drawings and schematics.

Introduction

About This Manual

This manual is divided into eight (8) major sections. Listed under these major sections are the major assemblies that contain the assembly drawings and the corresponding parts list showing item numbers, descriptions, part numbers, and quantities.

How to Use This Manual

1. Locate the Table of Contents pages. Then, locate the assembly that contains the item(s) to be replaced. For example, assume you need to replace the Brake Shoes which are located in section called "**DRIVE TRAIN & AXLES**".
2. Determine the drawing number for the appropriate assembly.
3. Locate the appropriate item number on the assembly drawings.
4. Examine the parts list to locate the description and part number that corresponds to the part(s) to be replaced.

How to Order a Replacement Part

1. Determine the correct part number, quantity and description using the procedure described in the previous section.
2. Make sure you have the correct purchase order number and the appropriate shipping and billing addresses.
3. If you want to order replacement parts by mail, the address is:

   Harsco Track Technologies
   HARSCO CORPORATION
   2401 Edmund Rd.
   P. 0. Box 20
   Cayce - West Columbia, SC 29171-0020
   USA
   ATTN: Parts Sales
4. If you want to order replacement parts by telephone, the number is **1-800-345-9160.** Make sure you ask to speak to the Parts Sales Department and make sure you have your purchase order number, bill to address, ship to address, part number(s), and quantity. Also, if possible, make sure you have the model number and serial number of your machine(s).
5. If you want to FAX the order, the number is **1-803-822-7403**.

Tie Inserter/Extractor
Model: TR-10 Phase III
Norfolk Southern

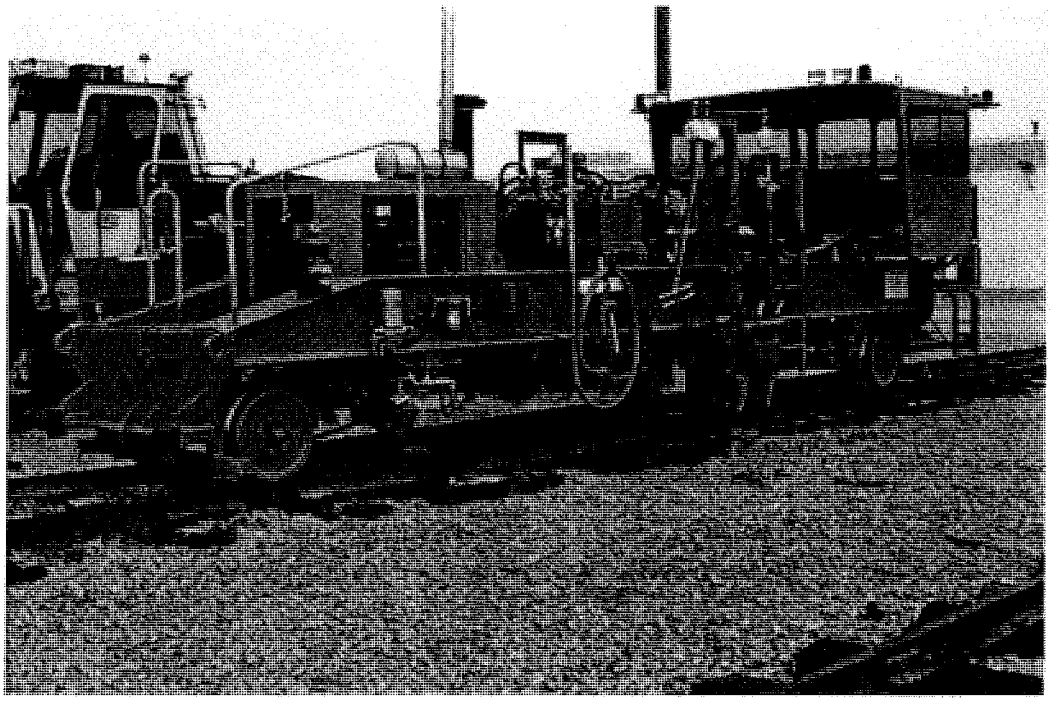

w/John Deere Tier II Diesel Engine (6068HF475 – Closed Unit)

Physical Data:

- Length	408 Inches (approx)
- Width	121.5 Inches
- Height	134 Inches (approx)
- Weight	37,000 Lbs (approx)
- Wheelbase	25 Ft

- Fuel Tank Capacity	227 Gal
- Hydraulic Tank Capacity	200 Gal.

Contents

(2006 NS)

	Section	Drawing No.
Section A Cab Components		
Cab Installation	A-1	B6242XAA
Cab Assembly	A-2	B6004VAF
Engine Control Panel Assy (Overhead)	A-3	C2895WAE
Engine Control Panel Wiring (Overhead)	A-4	C2884V04
Foot Control Assembly	A-5	B6098WAB
Floor Mat Installation	A-6	A4595XAB
Backup Mirror	A-7	A7667XAB
Glass Installation	A-8	D0512WAH
Swivel Head Control Box	A-9	C2969WAB
Swivel Head Control Box Wiring	A-10	4012388
Section AO Cab Components Options		
Hydraulic A/C Installation (Macbone)	AO-0903A	H6774XAC
West Coast Mirrors	AO-0906	0-2305766-0-01
Jump Seat Installation	AO-0907	0-3502030-0-17
Defroster Fan Addition	AO-0909	0-2202716-0-01
Handrail Assembly	AO-0912	4005100
Storage Box Addition	AO-0915	0-2202709-0-01
Beacon Installation (Amber)	AO-0924A	H6659XAB
Cab Safety Bar Assembly	AO-0925	D0714XAA
Windshield Washer Installation	AO-0926	C3557WAA
Dual Back-Up Alarm	AO-0927	B6549XAE
Lower Window Wiper Kit	AO-0928	A7720XAB
Speedometer Kit	AO-0929	H7167YAA
Section B Power Plant (Engine) Components		
Engine Assembly and Module (John Deere Tier II)	B-1	4011619
Engine Assembly (John Deere Tier II)	B-2	4011618
Pump Drive Assembly	B-3	4011954
Fuel Tank Installation	B-4	A6947WAD

	Section	Drawing No.

Section BO Power Plant (Engine) Components Options

Remote Oil Drain	BO-0908	C0464WAB
Water Trap Drain	BO-0913	A7758WAA

Section C Drive Train Components

Axle & Drive Assembly (Front Non-Insul 20 MPH)	C-1	4011557
Axle & Drive Assembly (Rear Non-Insul 20 MPH)	C-1A	4011558
Axle Assembly (Non-Insulated)	C-2	B8441 WAD

Section CO Drive Train Components Options

Front and Rear Bumper Installation	CO-0905	D8484WAD
Remote Lube Points	CO-0908	C5808XAA
Rear Hitch Installation	CO-0909	4007253

Section E Jacking Components

Rail Lifting Assembly	E-1	0-2011502-0-01
Clamp Frame Assembly	E-2	0-2101683-0-06/12
Rail Clamp Assembly (56 1/2" Gauge)	E-3	W683484R (R/H)
Rail Clamp Assembly (56 1/2" Gauge)	E-3	W683484L (LH)
Clamp Assembly	E-4	0-2300171-0-02
Stabilizer Assembly	E-5	0-2202632-0-03

Section F Work Components

Tie Exchanger Installation (Parts List Only)	F-1	H6758WAA
Extractor Assembly (Supplied By NS)	F-2	C04225-2

Section FO Work Components Options

Knaack Tool Box Installation	FO-0906	C8668XAA

	Section	Drawing No.

Section J Hydraulic Components

Hydraulic Assembly	J-1	A8998VAG
Gear Motor (Oil Cooler Fan)	J-2	0-3321020-0-01
PVM thru Drive Pump (P1/P2)	J-3A	4011624
Hydraulic Remote Control Valve (Joystick)	J-4	A6645Y01
Hydraulic Remote Control Valve (Foot Pedal)	J-4A	A0698Y06
Single Gear Pump (A/C)	J-5A	4011623
Double Pump (P3/P4)	J-6A	4011622
Lockout Cylinder Assembly	J-8	X769757ZA
Hydraulic Cylinder Assembly (Exchanger Lift)	J-9	A0173Y03
Major Valving Module	J-10	4011629
Major Valving Module Wiring Diagram	J-11	4010830
Extractor Cylinder Assembly	J-13	B9077XAC
Pivot Head Cylinder Repair Parts	J-14	G3588YAA
Jaw Cylinder Assembly	J-15	B5704XAF
Rail Clamp Cylinder Assembly	J-16	X683361A
Cylinder and Lock-up Assembly	J-17	B5996XAF/AG
Hydraulic Traction Motor	J-18A	0-3324000-0-11
NS Hydraulic Components	J-19	4011891
Hydraulic Tank Assembly	J-20	D4616VAB
Hydraulic Schematic	J-21	4011111
Hose Boom Accessories	J-23	4011850

Section JO Hydraulic Components Options

Emergency Pump Assembly	JO-0900A	A6656WAC
Lockable Hydraulic Drain Kit	JO-0903	A7757XAA
Hydraulic Tank Covers	JO-0908	D3817WAA
Top-Up Pump Kit	JO-0910A	A7830WAA
Hydraulic Fluid Sampling Kit Installation	JO-0913	D6054YAA
Hydraulic Tank Drain	JO-0912	A7757XAA
Hydraulic Fluid Sampling Kit Installation	JO-0913	D6054YAA

Section K Pneumatic Components

Air Components and Hose Assembly	K-1A	A6638VAC
Air Tank Assembly	K-2	0-2400248-0-02
Pneumatic Schematic	K-4	A7483W02

Section KO Pneumatic Components Options

Air Tank Shutdown	KO-0901	A8516WAB
Dryer and Purge Tank Kit	KO-0905	C9785X01
Brake Protection Valve	KO-0906	D2417XAA

Section L Electrical Components

General Electrical Assembly	L-1	C2982WAE
Cable Diagram	L-2	4012284
Junction Box Assembly	L-3	C3030WAD
Junction Box Wiring Diagram	L-4	4012342
Electrical Schematic	L-5	4012283

LO Electrical Components Options

Lighting Kit	LO-0900C	A7638WAG
Work Light Addition	LO-0901	A7656WAA

Limited Warranty

Harsco Rail, Harsco Corporation products are designed to give high quality service and are manufactured from high grade material, by competent workmen under careful supervision. Harsco Rail, Harsco Corporation warrants this product of its manufacture to be free of defects in material and workmanship, under normal use and service for a period of six (6) months from date of delivery to the original user. The obligation of Harsco Rail, Harsco Corporation under this warranty is limited to repairing or replacing at its factories, or other location designated by it, any part or parts thereof which are returned within 30 days of the date when failure occurs or defect is noted, with transportation charges prepaid, and which upon examination appears to the satisfaction of Harsco Rail, Harsco Corporation to have been defective. Such free repair or replacement does not include transportation charges, or the cost of installing the new part or any other expense incident thereto. Harsco Rail, Harsco Corporation will not be liable for other loss, damage, or expense directly or indirectly arising from the use of its products, nor will Harsco Rail, Harsco Corporation be liable for special, incidental or consequential damages.

Ordinary wear and tear, and damage from abuse, misuse, neglect or alteration are not covered by this warranty. Harsco Rail, Harsco Corporation assumes no liability for expenses incurred or repairs made outside its factories except by written consent. This warranty is null and void if instructions and operating procedures are not followed.

Equipment or parts not manufactured by this company, but which are furnished in connection with Harsco Rail products, are covered directly by the warranty of the manufacturer supplying them. However, Harsco Rail, Harsco Corporation will assist in obtaining adjustment on such equipment or parts when necessary.

THIS WARRANTY IS IN LIEU OF ALL OTHER WARRANTIES EXPRESSED OR IMPLIED INCLUDING ANY IMPLIED WARRANTIES OF MERCHANTABILITY OR FITNESS FOR A PARTICULAR PURPOSE AND OF ANY OTHER OBLIGATION OR LIABILITY OF Harsco Rail, HARSCO CORPORATION.

Product Improvement Liability Disclaimer

Harsco Rail, HARSCO CORPORATION RESERVES THE RIGHT TO MAKE ANY CHANGES IN OR IMPROVEMENTS ON ITS PRODUCTS WITHOUT INCURRING ANY LIABILITY OR OBLIGATION WHATEVER AND WITHOUT BEING REQUIRED TO MAKE ANY CORRESPONDING CHANGES OR IMPROVEMENTS IN PRODUCTS PREVIOUSLY MANUFACTURED OR SOLD.

Hazardous Material Disclaimer

THE PARTS/ASSEMBLIES THAT ARE USED IN THIS PRODUCT ARE CLASSIFIED AS “ARTICLES” ACCORDING TO 29 CFR 1910.1200 (C). THEY ARE FORMED TO A SPECIFIC SHAPE OR DESIGN DURING MANUFACTURE, HAVE END USE FUNCTION DEPENDENT UPON THEIR SHAPE OR DESIGN, AND DO NOT RELEASE ANY HAZARDOUS CHEMICAL UNDER NORMAL CONDITIONS OF USE. ACCORDINGLY, WE ARE NOT REQUIRED TO SUPPLY MATERIAL SAFETY DATA SHEETS (MSDS) OR TO LABEL SHIPPING CONTAINERS FOR “ARTICLES”. HOWEVER, LUBRICANTS, LIQUIDS, GASEOUS CHEMICALS AND SOLIDS USED IN OPERATION OR MAINTENANCE OF THE PRODUCT MAY REQUIRE THAT USER’S TAKE OCCUPATIONAL PROTECTIVE MEASURES. MSDS SHEETS FOR SUCH MATERIALS WILL BE SUPPLIED TO YOUR PURCHASING MANAGER/SAFET DIRECTOR TO BE USED IN YOUR EMPLOYEE SAFETY TRAINING EDUCATION AND ENVIRONMENTAL HEALTH TRAINING.

INDEX OF SECTIONS

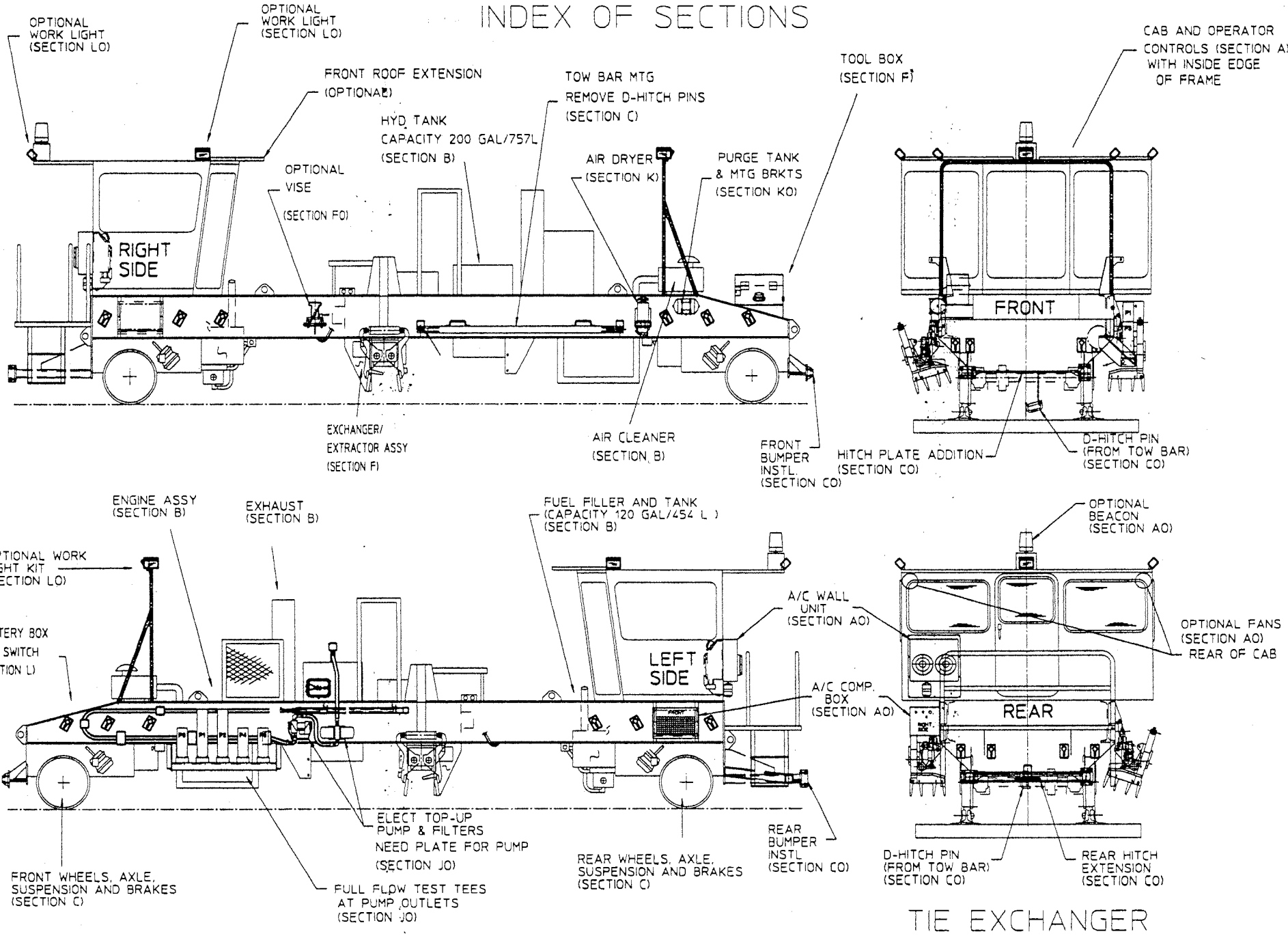

*INCLUDES CP OPTIONS

TIE EXCHANGER

MODEL TR-10 (PHASE III)

UPDATE

2008 TR-10

Models w/Serial No.'s 5502818 and 5502828

Contents

2008 TR-10 NS Update

For Models w/Serial No.'s 5502818 and 5502828

	Section	Drawing No.
Section A Cab Components		
Control Box Modified Switch	A-9A	4018036
Section B Power Plant (Engine) Components		
Engine Assy and Module (John Deere Tier III)	B-1	4011619
Engine Assy (John Deere Tier III)	B-2A	4011618
Section J Hydraulic Components		
NS Hydraulic Components	J-19	4011891
Hydraulic Schematic	J-21A	4017968
Major Valving Assembly	J-24	4017509
Section L Electrical Components		
General Electrical Assembly	L-1	C2982WAE

SECTION A-9A

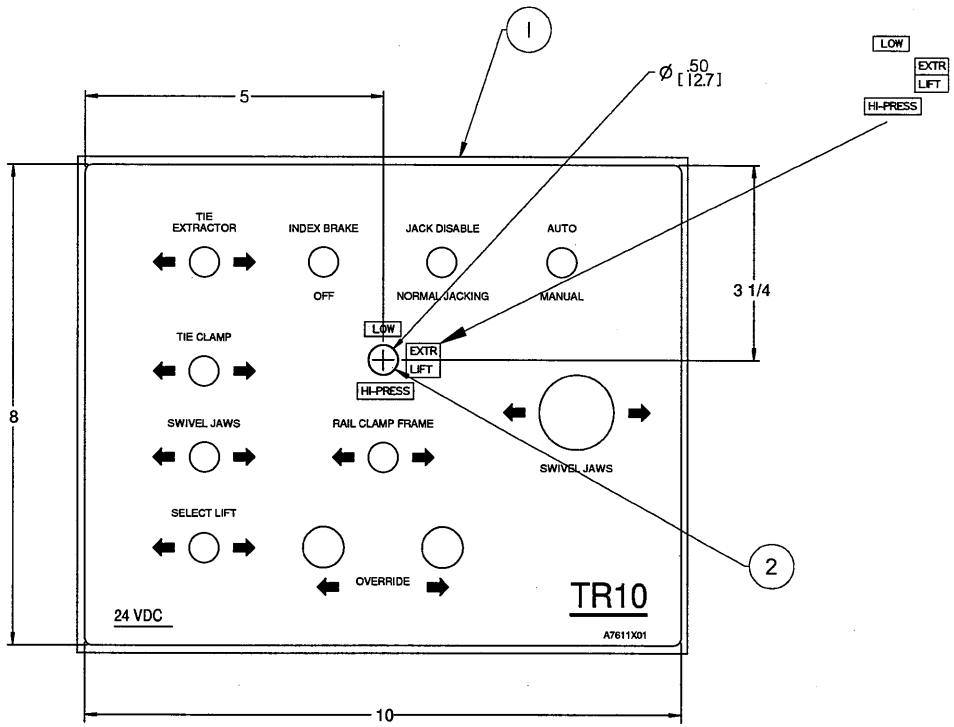

ASSEMBLY NOTES:

1. DRILL DOOR PANEL, 1/2 INCH DIA HOLE FOR MOUNTING TOGGLE SWITCH.
2. WIRE BOX PER SW HD BOX WIRING DIAGRAM 4012388.
3. USE SPARES IN CABLE CL-602 FOR WIRE NUMBERS 79 AND 107 TO MAJOR VALVING JUNCTION BOX.
4. MAKE DECALS "LOW", "HI-PRESS", "EXTR" AND "LIFT" TO IDENTIFY TOGGLE SWITCH. MATCH LETTERING ALREADY ON NAMEPLATE AND ARRANGE AS SHOWN ON BOX FACE.
   TRIM TAPE TO FIT FOR APPEARANCE.

USE LABELING TAPE: 3/8" WIDE, BLACK BACKGROUND WITH WHITE LETTERING.
LETTERING SIZE: 16

ITEM NUMBER	PART NUMBER	DESCRIPTION	QUANTITY
1	C2969WAB	CONTROL BOX	1
2	L41819	SWITCH TOGGLE	1

CONFIDENTIAL
© COPYRIGHT 2001 HARSCO TRACK TECHNOLOGIES. THIS DRAWING OR DOCUMENT IS THE PROPERTY OF HARSCO TRACK TECHNOLOGIES AND EMBODIES CONFIDENTIAL INFORMATION, TRADE SECRET INFORMATION, AND/OR KNOW-HOW THAT IS THE PROPERTY OF HARSCO TRACK TECHNOLOGIES. BY ACCEPTING THIS DRAWING OR DOCUMENT, THE RECIPIENT AGREES (1) NOT TO PROVIDE, OR OTHERWISE MAKE AVAILABLE, THE DRAWING OR DOCUMENT, OR ANY INFORMATION OR KNOW-HOW EMBODIED THEREIN, TO ANY THIRD PARTY AND (2) NOT TO REPRODUCE OR USE THE DRAWING OR DOCUMENT TO MANUFACTURE ANY APPARATUS OR DEVICE, WITHOUT THE PRIOR WRITTEN AUTHORIZATION OF HARSCO TRACK TECHNOLOGIES.

SOLID EDGE DRAWING

IMPLIED TOLERANCES
ALL DIMENSIONS ARE IN INCHES - TOLERANCE UNLESS OTHERWISE SPECIFIED

CHANGE	REV.	REVISION	DATE
ECN-101974	A	RELEASE	8-8-08

Description: CONTROL BOX, MODIFIED SW HD
Drawing Number: ----------
Machine Type: TR10, NS
Model: N/A
Drawn: hhill
Date Drawn: 8-8-08
Weight: N/A
Size:
APVD Eng: HH
APVD Qlty: JBR
Mat'l: SEE ABOVE
Part Number: 4018036
Size: D
Sheet: 1 of 1

ITT
Harsco Track Technologies
Harsco
Columbia, SC

Plotted by hhill on 8/11/2008 4018036.dft

SECTION B-1

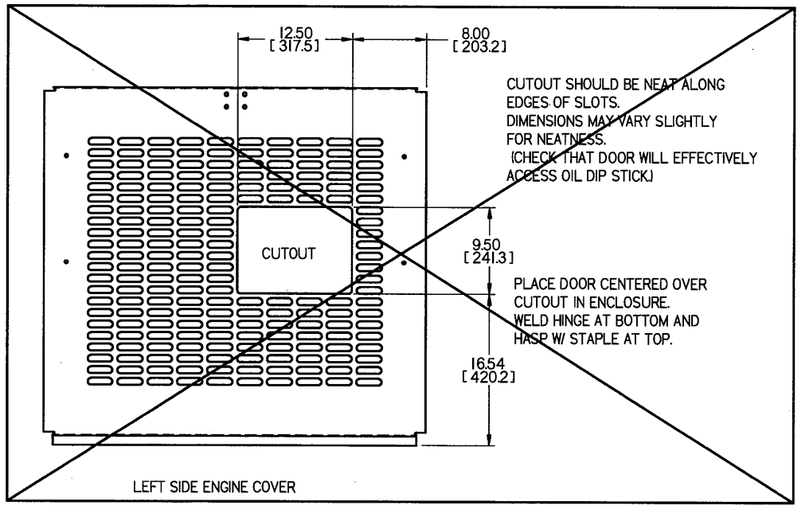

RETAINED CUTOUT INFO FOR HISTORICAL PURPOSES.

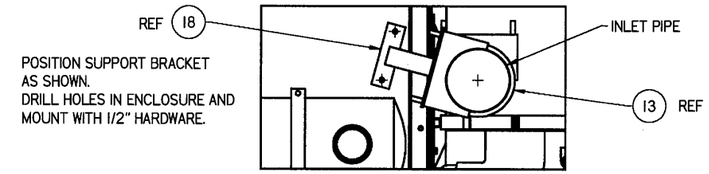

SECTION A-A

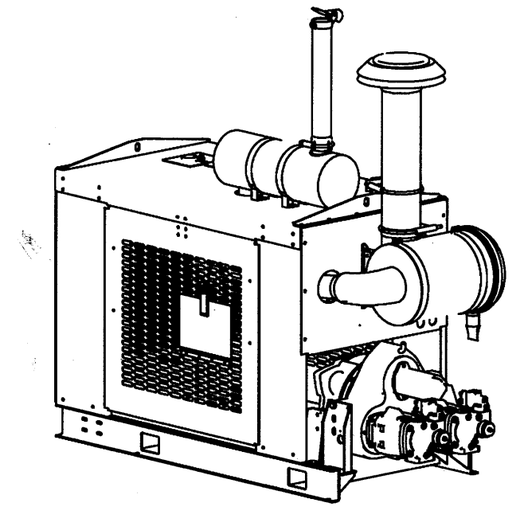

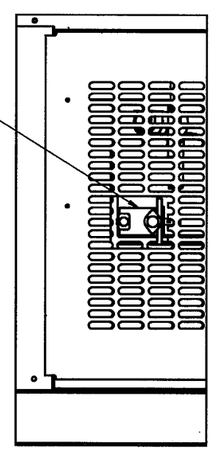

PUMP MOUNTED ON REAR OF AIR COMPRESSOR

RIGHT SIDE ENGINE COVER
(SHOWN WITH CUTOUT)

NOTE:
"PADLOCK AND CHAIN"
THREE (3) LONG PADLOCKS SHOULD BE ATTACHED TO LATCHES ON ENGINE ENCLOSURE.
WELD CHAIN ENDS TO ENCLOSURE.
(CONTACT ENGINEERING)

ATTACH TO FUEL RETURN LINE. 25

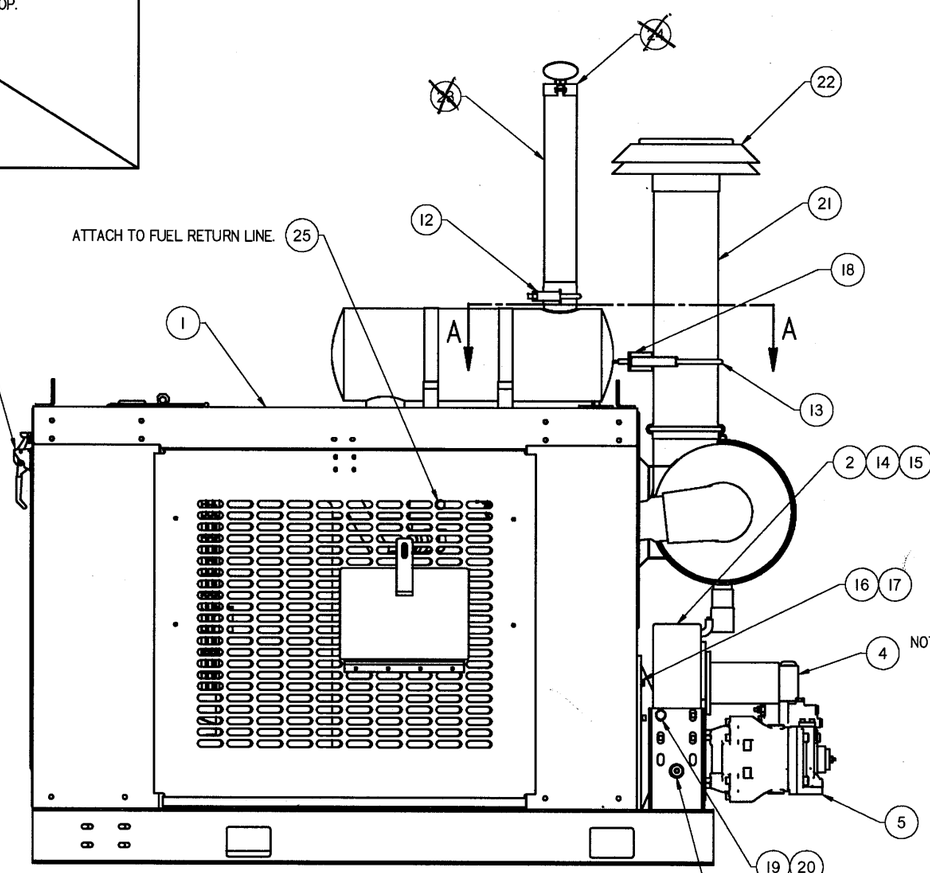

LEFT SIDE ENGINE

NOTE: PUMP DRIVE FOR ITEM-4 MAY NEED ROTATED 90 DEG.

CHECK THAT PLUGS IN PUMP DRIVE ARE ACCESSABLE THROUGH HOLES IN BRACKET.

Item Number	Part Number	Description	Quantity
1	4017116	JOHN DEERE POWER UNIT, III	1
2	4011554	PUMP DRIVE, FUNK (3-PAD)	1
3	4011623	V10 PUMP	1
4	4011622	VANE DOUBLE PUMP	1
5	4011624	PVM098 PUMP	2
~~6~~	~~H08867V01~~	~~DOOR, DIP STICK~~	~~1~~
~~7~~	~~H08868V01~~	~~HINGE~~	~~1~~
~~8~~	~~L4214147~~	~~FIXED STAPLE & HASP~~	~~1~~
12	0-3012008-0-05	MUFFLER CLAMP 3.50"	1
13	0-3612012-0-16	CLAMP 7.00", FLAT U-BOLT	1
14	A0061026	3/8 HIGH COLLAR L/W	8
15	A0043067	3/8-16 X 1" NYLSHCS GR8	8
16	A0061011	3/8 HEAVY LOCK WASHER	12
17	A0038004	3/8-16 X 1 1/4 HHCS GR.8	12
18	4011938	SUPPORT BRACKET	1
19	F001103	5/8 LOCK WASHER, PLATED	8
20	F019762	5/8-11 X 1 1/2 GR 8 HHSC	8
21	0-3514015-0-01	AIR STACK	1
22	0-3514013-0-12	AIR INLET HOOD	1
23	0-3612021-0-07	CONNECTOR END	1
~~24~~	~~0-3612016-0-01~~	~~RAIN CAP~~	~~1~~
~~25~~	~~F022429~~	~~DC-STR 4 X 0~~	~~1~~

CONFIDENTIAL
© COPYRIGHT 2001 HARSCO TRACK TECHNOLOGIES. THIS DRAWING OR DOCUMENT IS THE PROPERTY OF HARSCO TRACK TECHNOLOGIES AND EMBODIES CONFIDENTIAL, INFORMATION, TRADE SECRET INFORMATION, AND/OR KNOW-HOW THAT IS THE PROPERTY OF HARSCO TRACK TECHNOLOGIES. BY ACCEPTING THIS DRAWING OR DOCUMENT, THE RECIPIENT AGREES (1) NOT TO PROVIDE, OR OTHERWISE MAKE AVAILABLE, THE DRAWING OR DOCUMENT, OR ANY INFORMATION OR KNOW-HOW EMBODIED THEREIN, TO ANY THIRD PARTY AND (2) NOT TO REPRODUCE OR USE THE DRAWING OR DOCUMENT TO MANUFACTURE ANY APPARATUS OR DEVICE, WITHOUT THE PRIOR WRITTEN AUTHORIZATION OF HARSCO TRACK TECHNOLOGIES.

IMPLIED TOLERANCES
ALL DIMENSIONS ARE IN INCHES - TOLERANCE UNLESS OTHERWISE SPECIFIED

Nominal Hole Diameter		Inch Plus or Minus		Nominal Hole Diameter		Metric Plus or Minus	
Over	To	2 Place Decimal	3 Place Decimal	Over	To	1 Place Decimal	2 Place Decimal
0	6	.03	.005	0	150	.8	.13
6	24	.04	.005	150	600	1.0	.26
24	-	.08	.010	-	600	1.5	.25

UNLESS OTHERWISE SPECIFIED ALL MACHINED SURFACES WILL HAVE:
A SURFACE FINISH OF 125 MICROINCHES
ANGULAR TOLERANCE OF ± 30'
CONCENTRICITY WITHIN .010

THIRD ANGLE PROJECTION

UNLESS OTHERWISE SPECIFIED ALL WELDS SHOULD ADHERE TO THE LATEST FTT WELD-MENT SPECIFICATION 131

CHANGE	R/L	REVISION	DATE
100464	A	RELEASE	4-24-06
100596	B	ADDED DRAWING, DELETED IT-9 THRU 11, ADDED IT-16 THRU 20. HH/DES/APD	6-20-06
100625	C	DELETED IT-6, 7 & 8. ACCESS DOOR CAME W/ ENGINE, ADDED IT-21 & 22. HH/DES/APD	7-17-06
100700	D	ITEM 13, QTY WAS 2. ITEM 21 WAS GB103723. HH/DES/APD	8-10-06
ECN-101819	E	IT-1 WAS 4011618, IT-12 WAS 0-3012008-0-07 & ADDED ITEMS 23 & 24. HH/JBR	6-5-08
ECN-101974	F	ADDED ITEM 25 AND NOTE. DESCRIPTION UPDATE. HH/JBR	8-8-08

SOLID EDGE DRAWING

Description: ENGINE ASSY & MOD, JD
Drawing Number: ----------
Machine Type: TR10, NS
Model: 4011619.asm
Drawn: hhill
Date Drawn: 4-24-06
Weight: 0.000 lbm
Size/#:
APVD Dwg: DES
APVD Dtg: APD
Mat'l: SEE ABOVE

HTT
Harsco Track Technologies
Harsco
Columbia, SC

Part Number: 4011619
Size: D
Sheet: 1 of 1

Plotted by hhill on 8/8/2008 4011619.dft

SECTION B-2A

MODEL AND DRAWING TO COME LATER

JOHN DEERE TIER III 6068HF485 275-HP ENCLOSED POWER UNIT

SPECIFICATION NUMBER:
6068HF485/275/EPU/_____ (BOM TO BE DETERMINED)
ENGINE PACKAGE INCLUDES:

CONTROL BOX w/ ELECTRICAL CABLE (21-FT)
AIR CLEANER MOUNTED ON ENGINE ENCLOSURE
MUFFLER MOUNTED ON ENGINE ENCLOSURE
FRAME EXTENDED TO MOUNT FUNK PUMP DRIVE # 28211CB-13056

REFERENCE: JOHN DEERE TIER III REPLACEMENT FOR NORFOLK SOUTHERN # 630-707940.

CONFIDENTIAL
© COPYRIGHT 2001 HARSCO TRACK TECHNOLOGIES. THIS DRAWING OR DOCUMENT IS THE PROPERTY OF HARSCO TRACK TECHNOLOGIES AND EMBODIES CONFIDENTIAL INFORMATION, TRADE SECRET INFORMATION, AND/OR KNOW-HOW THAT IS THE PROPERTY OF HARSCO TRACK TECHNOLOGIES. BY ACCEPTING THIS DRAWING OR DOCUMENT, THE RECIPIENT AGREES (1) NOT TO PROVIDE, OR OTHERWISE MAKE AVAILABLE, THE DRAWING OR DOCUMENT, OR ANY INFORMATION OR KNOW-HOW EMBODIED THEREIN, TO ANY THIRD PARTY AND (2) NOT TO REPRODUCE OR USE THE DRAWING OR DOCUMENT TO MANUFACTURE ANY APPARATUS OR DEVICE, WITHOUT THE PRIOR WRITTEN AUTHORIZATION OF HARSCO TRACK TECHNOLOGIES.

SOLID EDGE DRAWING

IMPLIED TOLERANCES
ALL DIMENSIONS ARE IN INCHES - TOLERANCE UNLESS OTHERWISE SPECIFIED

NOMINAL DIM. RANGE (INCHES)		DECIMAL PLUS OR MINUS		NOMINAL DIM. RANGE (MM)		METRIC PLUS OR MINUS	
OVER	TO	2 PLACE DECIMAL	3 PLACE DECIMAL	OVER	TO	1 PLACE DECIMAL	2 PLACE DECIMAL
0	6	.03	.030	0	150	.5	.13
6	24	.04	.025	150	600	1.0	.25
24	-	.06	.010	-	600	1.0	.25

UNLESS OTHERWISE SPECIFIED ALL INCORPORATED WELDMENTS WILL HAVE:
A MAXIMUM OF 3mm(0.118 IN) OVERALL LEG ANGULARITY TOLERANCE OF ± 90° (DIAGONALITY 180 DIA. DIV.)

THIRD ANGLE PROJECTION

USE FOR OTHERWISE APPROVED (BY WRITTEN EMAIL) ADDENDUMS TO THE LATEST HTT WELD MANUFACTURING 101

CHANGE	RVL	REVISION	DATE
ECN-101819	A	RELEASE	6-5-08

Description: JOHN DEERE POWER UNIT, III
Drawing Number: ----------
Machine Type: TR10, NS
Model: NONE
Drawn: hhill
Date Drawn: 6-5-08
Weight: N/A
Scale:
CHK'D BY: HH
APP'D BY: JBR
Part: SEE ABOVE

HTT Harsco Track Technologies
Harsco
Columbia, SC

Part Number: 4017116
Size: D
Sheet: 1 of 1

Plotted by hhill on 6/5/2008 4017116.dft

SECTION J-19

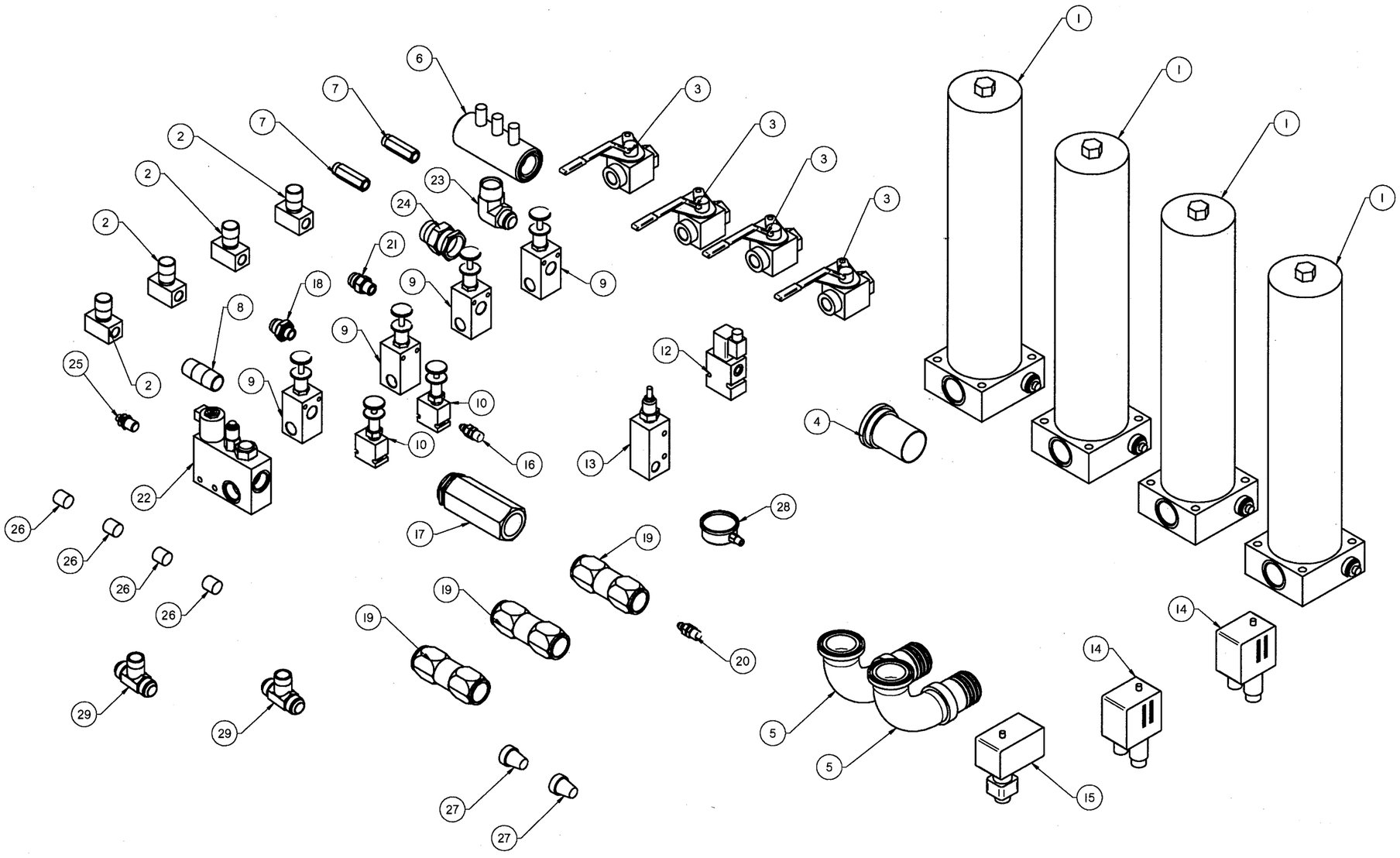

Item Number	Part Number	Description	Quantity
1	4011632	HYD HIGH PRESSURE FILTER	4
2	L421120	FLOW CONTROL -8 FP	4
3	4011865	BALL VALVE,PAD-LOCKING	4
4	C3538YAG	STR HOSE STEM W/SAE FLG	1
5	0-3304201-0-10	ELBOW 90 SPLIT FLG -40	2
6	C9677Y01	MONITORING SYSTEM	1
7	L41209	CHECK VALVE 3/8 NPT	2
8	Z753146-143	1" THD PIPE NIPPLE 3" - LG	1
9	4011872	RELIEF VALVE 3/4 NPT	4
10	4011868	RELIEF VALVE	2
12	157866-1	VALVE, 2 WAY SOL	1
13	4011866	PRESSURE REDUCING VALVE	1
14	A6111Y02	PRESSURE SWITCH	2
15	L41380	PRESSURE SWITCH	1
16	C3950Y01	FAST COUPLING 1/4 NPT	9
17	L425375	1 1/2 CHECK VALVE	1
18	C4211Y04	1" BSPP -1" JIC STR	4
19	0-3336021-0-05	CHECK VALVE 1 1/4	3
20	C3950Y03	FASR COUPLING -4 BSPP	4
21	F012899	1" JIC- 3/4 MP STR	3
22	4011625	SOLENOID RELIEF VALVE	1
23	F018842	1 1/4 MP X 1 JIC 90	2
24	F023880	1 1/4 FM SW JIC X 1 1/4 NPT STR	2
25	C4211Y01	MALE JC-MALE BSPP (PARALLEL)	2
26	F041580	CLAMP	4
27	0-3304107-0-22	REDUCER, BUSHING	2
28	0-3307004-0-08	HYDRAULIC GUAGE	1
29	L424331	TEE, 1" JIC RUN, 1" NPT	2

CONFIDENTIAL

© COPYRIGHT 2001 HARSCO TRACK TECHNOLOGIES. THIS DRAWING OR DOCUMENT IS THE PROPERTY OF HARSCO TRACK TECHNOLOGIES AND EMBODIES CONFIDENTIAL INFORMATION, TRADE SECRET INFORMATION, AND/OR KNOW-HOW THAT IS THE PROPERTY OF HARSCO TRACK TECHNOLOGIES. BY ACCEPTING THIS DRAWING OR DOCUMENT, THE RECIPIENT AGREES (1) NOT TO PROVIDE, OR OTHERWISE MAKE AVAILABLE, THE DRAWING OR DOCUMENT, OR ANY INFORMATION OR KNOW-HOW EMBODIED THEREIN, TO ANY THIRD PARTY AND (2) NOT TO REPRODUCE OR USE THE DRAWING OR DOCUMENT TO MANUFACTURE ANY APPARATUS OR DEVICE, WITHOUT THE PRIOR WRITTEN AUTHORIZATION OF HARSCO TRACK TECHNOLOGIES.

SOLID EDGE DRAWING

IMPLIED TOLERANCES

ALL DIMENSIONS ARE IN INCHES - TOLERANCE UNLESS OTHERWISE SPECIFIED

NOMINAL MTL THICK	INCH PLUS OR MINUS			NOMINAL MTL THICK	METRIC PLUS OR MINUS		
OVER	TO	2 PLACE DECIMAL	3 PLACE DECIMAL	OVER	TO	1 PLACE DECIMAL	2 PLACE DECIMAL
0	8	.03	.015	0	150	.8	.13
8	24	.04	.005	150	600	1.0	.25
24	-	.03	.010	-	600	1.5	.25

UNLESS OTHERWISE SPECIFIED ALL MACHINED SURFACES WILL HAVE:

A SURFACE FINISH OF 125 MICROINCHES AND A LAY TOLERANCE OF ± 60° CONCENTRICITY WITHIN .010

THIRD ANGLE PROJECTION

UNLESS OTHERWISE SPECIFIED ALL WELDS SHOULD ADHERE TO THE LATEST HTT WELD INSPECTION SPECIFICATION 101

CHANGE	R/L	REVISION		DATE
100560	A	RELEASE		06-02-06
ECN-100697	B	ADDED PRESSURE SWITCHS ITEM 14 & 15		08-09-06
ECN-100712	C	ADDED ITEMS 16 - 22	MLT 08/18/06	08-19-06
ECN-101015	D	ADDED ITEMS 23, 26 & 27. ITEM 25 WAS C7253Y04	(FAS/HH/JBR)	03-27-07
ECN-101126	E	DELETED IT-11, A2130Y02 PRESS. RED. VLV QTY-2.	HH/JBR	6-15-07
ECN-101942	F	ADDED ITEMS 28 AND 29.	HH/JBR	7-30-08

Description: NS HYDRAULIC COMPONENTS

Drawing Number: ----------

Model: 4011891.asm

Weight: 0.000 lbm | Scale: 1:4

Matl:

Machine Type:

Drawn: rtrippe | Date Drawn: 06-02-06

APVD Dwg: HH | APVD Chkg: APD

HTT
Harsco Track Technologies
Harsco
Columbia, SC

Part Number: 4011891 | Size: D | Sheet: 1 of 1

Plotted by hhill on 7/30/2008 4011891.dft

SECTION J-21A

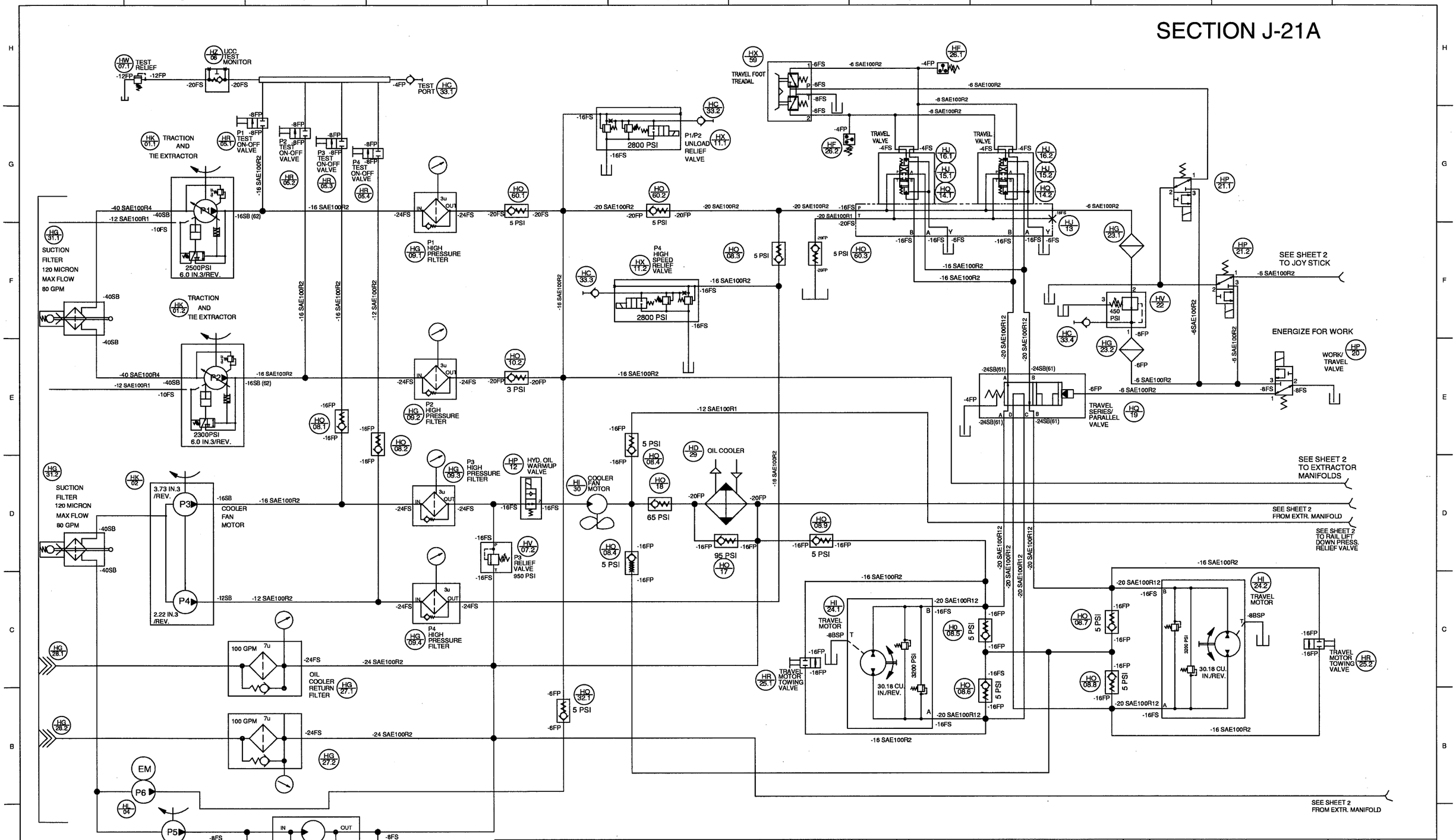

SOLID EDGE DRAWING

CONFIDENTIAL

© COPYRIGHT 2001 HARSCO TRACK TECHNOLOGIES. THIS DRAWING OR DOCUMENT IS THE PROPERTY OF HARSCO TRACK TECHNOLOGIES AND EMBODIES CONFIDENTIAL INFORMATION, TRADE SECRET INFORMATION, AND/OR KNOW-HOW THAT IS THE PROPERTY OF HARSCO TRACK TECHNOLOGIES. BY ACCEPTING THIS DRAWING OR DOCUMENT, THE RECIPIENT AGREES (1) NOT TO PROVIDE, OR OTHERWISE MAKE AVAILABLE, THE DRAWING OR DOCUMENT, OR ANY INFORMATION OR KNOW-HOW EMBODIED THEREIN, TO ANY THIRD PARTY AND (2) NOT TO REPRODUCE OR USE THE DRAWING OR DOCUMENT TO MANUFACTURE ANY APPARATUS OR DEVICE, WITHOUT THE PRIOR WRITTEN AUTHORIZATION OF HARSCO TRACK TECHNOLOGIES.

IMPLIED TOLERANCES

ALL DIMENSIONS ARE IN INCHES - TOLERANCE UNLESS OTHERWISE SPECIFIED

NOMINAL SIZE RANGE OVER	TO	INCH PLUS OR MINUS ±FRACT DECIMAL	±FRACT DECIMAL	NOMINAL SIZE RANGE OVER	TO	METRIC PLUS OR MINUS ±FRACT DECIMAL	±FRACT DECIMAL
0	6	.02	.005	0	150	.8	.13
6	24	.04	.008	150	600	1.0	.20
24	-	.08	.010	-	600	1.5	.25

UNLESS OTHERWISE SPECIFIED ALL MACHINED SURFACE WILL HAVE A SURFACE FINISH OF 125 MICROINCHES ANGLE ANY TOLERANCE OF ± 60' CONCENTRICITY WITHIN .010

THIRD ANGLE PROJECTION

UNLESS OTHERWISE SPECIFIED ALL WELDS SHOULD ADHERE TO THE LATEST HTT WELD INSPECTION SPECIFICATION 101

CHANGE	R/L	REVISION	DATE
ECN-101958	A	RELEASED	8-1-08

Description: HYDRAULIC SCHEMATIC

Drawing Number: 4017968

Model: TR10

Weight: Scale:

Material: DOCUMENT ONLY

Machine Type: NS TR10 2008

Drawn: hhill Date Drawn: 8-1-08

APVD Dwg: HH APVD ODrg: JBR

ITT Harsco Track Technologies
Harsco
Columbia, SC

Part Number: 4017968 Size: D Sheet: 1 of 3

Plotted by hhill on 8/4/2008 4017968.dft

SECTION J-21A

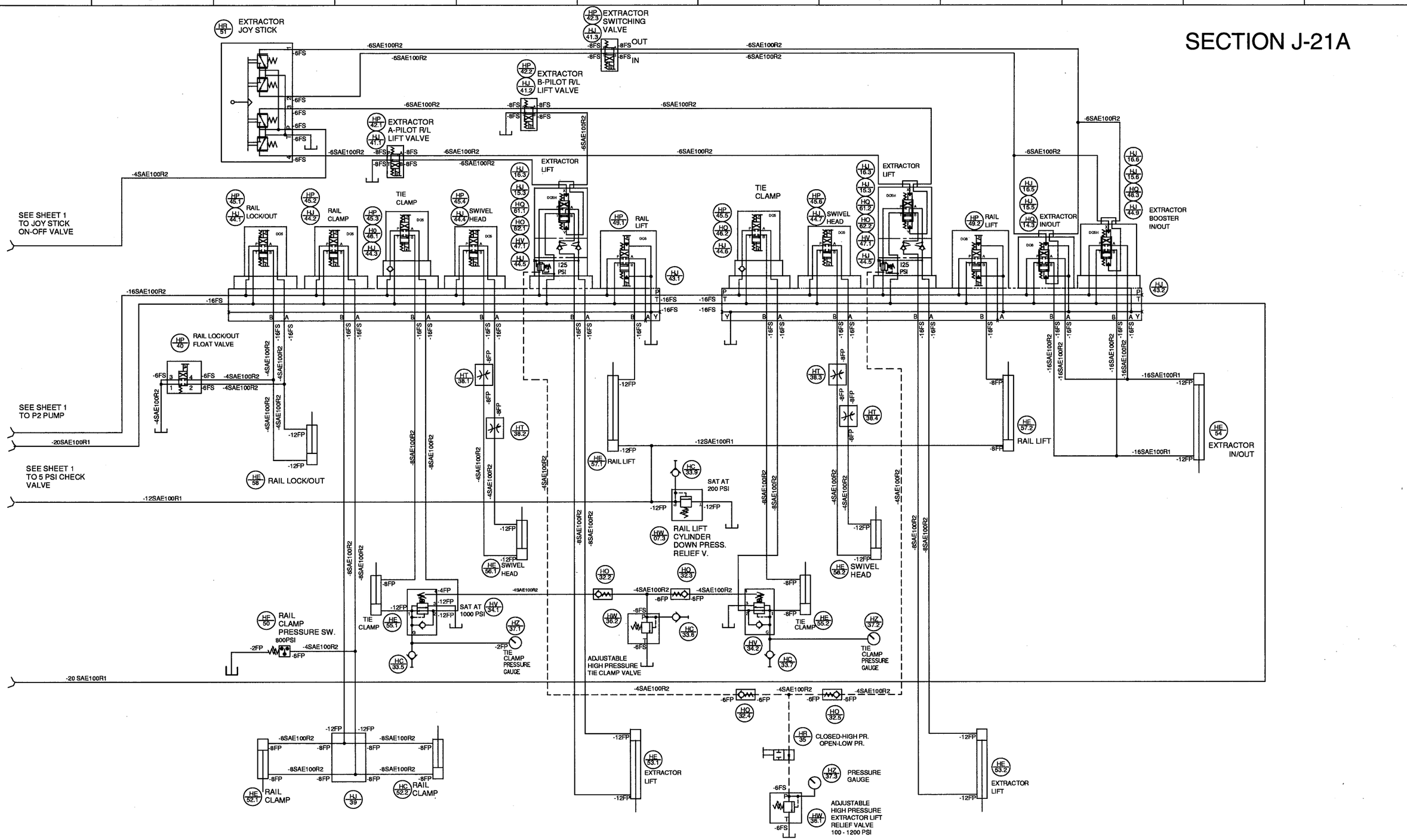

SOLID EDGE DRAWING

CONFIDENTIAL

© COPYRIGHT 2001 HARSCO TRACK TECHNOLOGIES. THIS DRAWING OR DOCUMENT IS THE PROPERTY OF HARSCO TRACK TECHNOLOGIES AND EMBODIES CONFIDENTIAL INFORMATION, TRADE SECRET INFORMATION, AND/OR KNOW-HOW THAT IS THE PROPERTY OF HARSCO TRACK TECHNOLOGIES. BY ACCEPTING THIS DRAWING OR DOCUMENT, THE RECIPIENT AGREES (1) NOT TO PROVIDE, OR OTHERWISE MAKE AVAILABLE, THE DRAWING OR DOCUMENT, OR ANY INFORMATION OR KNOW-HOW EMBODIED THEREIN, TO ANY THIRD PARTY AND (2) NOT TO REPRODUCE OR USE THE DRAWING OR DOCUMENT TO MANUFACTURE ANY APPARATUS OR DEVICE, WITHOUT THE PRIOR WRITTEN AUTHORIZATION OF HARSCO TRACK TECHNOLOGIES.

IMPLIED TOLERANCES

ALL DIMENSIONS ARE IN INCHES - TOLERANCE UNLESS OTHERWISE SPECIFIED

INCH NOMINAL SIZE RANGE OVER	TO	PLUS OR MINUS 2 PLACE DECIMAL	3 PLACE DECIMAL	METRIC NOMINAL SIZE RANGE OVER	TO	PLUS OR MINUS 1 PLACE DECIMAL	2 PLACE DECIMAL
0	6	.02	.005	0	150	.5	.13
6	24	.04	.008	150	600	1.0	.20
24	-	.08	.010	-	600	1.5	.25

UNLESS OTHERWISE SPECIFIED ALL MACHINED SURFACES WILL HAVE A SURFACE FINISH OF 125 MICROINCHES ANGULARITY TOLERANCE OF ± 60' CONCENTRICITY WITHIN .010

THIRD ANGLE PROJECTION

UNLESS OTHERWISE SPECIFIED ALL WELDS SHOULD ADHERE TO THE LATEST HTT WELD INSPECTION 101

CHANGE	R/L	REVISION	DATE
ECN-101958	A	RELEASED	8-1-08

Description: HYDRAULIC SCHEMATIC

Drawing Number: 4017968

Machine Type: NS TR10 2008

Model: TR10

Drawn: hhill — Date Drawn: 8-1-08

Weight: — Scale: — APVD Dwg: HH — APVD ChEng: JBR

Mat'l: DOCUMENT ONLY

HTT Harsco Track Technologies, Harsco, Columbia, SC

Part Number: 4017968 — Size: D — Sheet: 2 of 3

Plotted by hhill on 8/4/2008 4017968.dft

SECTION J-21A

ITEM NO.	NUMBER	DESCRIPTION	QTY
1	4011624	PVM098 PUMP	X
2	4011622	VANE DOUBLE PUMP	X
3	4011623	V10 PUMP	X
4	0-3316003-0-04	EMERGENCY PUMP (24VDC)	X
5	4011865	BALL VALVE, PAD-LOCKING	X
6	C9677Y01	MONITORING SYSTEM	X
7	4011872	RELIEF VALVE 3/4 NPT	X
8	0-3336021-0-07	IN LINE CHICK VALVE -16FP 5 PSI	X
9	4011632	HYD HIGH PRESSURE FILTER	X
10	-------	N/A	X
11	4011625	SOLENOID RELIEF VALVE	X
12	A0729Y04	VALVE, 2 WAY SOL. OPER	X
13	A0963Y01	DO8 MANIFOLD (2 STATION)	X
14	4011659	DO8 HYD. PILOT OP. POR. V.	X
15	412116	TAPPING PLATE	X
16	0-3360011-0-01	MANIFOLD ACCESSORIES (BLANK PLATE)	X
17	L425561	IN-LINE CHECK VALVE (95 PSI) (1 1/4 FP)	X
18	L424580	IN-LINE CHECK VALVE (65 PSI) (1"FP)	X
19	4011754	SELECTOR VALVE	X
20	A0730Y04	VALVE, 3 WAY, SOL. OP.	X
21	A0730Y01	VALVE, 3 WAY, SOL. OP.	X
22	4011866	VALVE, PRESSURE REDUCING (500 - 1500 PSI)	X
23	A5748Y01	IN-LINE HYD FILTER	X
24	0-3324000-0-11	HYDRAULIC MOTOR ASSEMBLY	X
25	L421386	SELECTOR VALVE	X
26	A6111Y02	SWITCH, PRESSURE	X
27	C9249Y05	IN TANK RETURN FILTER	X
28	0-3380000-0-03	FLOW DIFFUSER (2 1/2 NPT)	X
29	A2727YX01	OIL COOLER	X
30	0-33211020-0-01	GEAR MOTOR	X
31	D4176Y01	MAGNET SUCTION SEPARATOR	X
32	L41209	CHECK VALVE 3/8 NPT	X
33	C3950Y01	FAST COUPLING 1/4 NPT	X
34	A2130Y07	VALVE, PRESSURE REDUCING (100 - 3000 PSI)	X

ITEM NO.	PART NUMBER	DESCRIPTION	QTY
35	157866-1	VALVE, 28VDC SOLENOID	X
36	4011868	RELIEF VALVE	X
37	0-3307004-0-08	PRESSURE GAUGE (0 - 3000 PSI)	X
38	L421120	NEEDLE VALVE (1/2 NPT)	X
39	Y765715-001	MANIFOLD	X
40	4011653	SOLENOID VALVE	X
41	0-3361006-0-01	SUBPLATE NFPA DO3 STD	X
42	4011684	DO3 VALVE 2/4	X
43	4011687	DO8 MANIFOLD 6 STATIONS	X
44	4011712	DO5 TO DO8 MANIFOLD	X
45	6641	DO5 DBL. SOL. VALVE	X
46	0-3336036-0-01	SANDWICH CHECK VALVE (P- PORT DO5)	X
47	4014967	VALVE, REDUCING/RELIEVING DO5	X
48	4011661	DO5 HYD. PILOT OP. VALVE	X
49	4011802	DO8 SOL. 4/3 DIR. VALVE	X
50	L41380	PRESSURE SWITCH	X
51	A6645Y01	HYD. JOYSTICK	X
52	X683361A	HYD.CYL. (RAIL CLAMP)	X
53	A0173Y03	HYD. CYL. (EXCH. LIFT)	X
54	B9077XAC	HYD. CYL. (EXCH. CYL.)	X
55	B5704XAF	HYD. CYL. (TIE CLAMP)	X
56	A4904Y03	HYD. CYL. (SWIVEL HEAD)	X
57	B5996XAG	HYD. CYL. (RAIL LIFT)	X
58	X769757ZA	HYD. CYL. (RAIL LOCKOUT)	X
59	A0698Y06	TRACTION PEDAL	X
60	0-3336021-0-05	1 1/4 CHECK VALVE 5PSI	X
61	4014966	VALVE, PROPORTIONAL DO5H	X
62	0-3336008-0-03	PILOT OPER. CHECK VALVE	X
63	0-3334049-0-12	RELIEF VALVE	X
64			
65			
66			
67			
68			

ITEM NO.	PART NUMBER	DESCRIPTION	QTY
69			
70			
71			
72			
73			
74			
75			
76			
77			
78			
79			
80			
81			
82			
83			
84			
85			
86			
87			
88			
89			
90			
91			
92			
93			
94			
95			
96			
97			
98			
99			
100			

CONFIDENTIAL
© COPYRIGHT 2001 HARSCO TRACK TECHNOLOGIES. THIS DRAWING OR DOCUMENT IS THE PROPERTY OF HARSCO TRACK TECHNOLOGIES AND EMBODIES CONFIDENTIAL INFORMATION, TRADE SECRET INFORMATION, AND/OR KNOW-HOW THAT IS THE PROPERTY OF HARSCO TRACK TECHNOLOGIES. BY ACCEPTING THIS DRAWING OR DOCUMENT, THE RECIPIENT AGREES (1) NOT TO PROVIDE, OR OTHERWISE MAKE AVAILABLE, THE DRAWING OR DOCUMENT, OR ANY INFORMATION OR KNOW-HOW EMBODIED THEREIN, TO ANY THIRD PARTY AND (2) NOT TO REPRODUCE OR USE THE DRAWING OR DOCUMENT TO MANUFACTURE ANY APPARATUS OR DEVICE, WITHOUT THE PRIOR WRITTEN AUTHORIZATION OF HARSCO TRACK TECHNOLOGIES.

SOLID EDGE DRAWING

IMPLIED TOLERANCES
ALL DIMENSIONS ARE IN INCHES - TOLERANCE UNLESS OTHERWISE SPECIFIED

NOMINAL SIZE RANGE		INCH PLUS OR MINUS		NOMINAL SIZE RANGE		METRIC PLUS OR MINUS	
OVER	TO	3 PLACE DECIMAL	5 PLACE DECIMAL	OVER	TO	1 PLACE DECIMAL	3 PLACE DECIMAL
0	6	.03	.005	0	150	.8	.13
6	24	.04	.008	150	600	1.0	.20
24	-	.09	.010	-	600	1.5	.25

UNLESS OTHERWISE SPECIFIED ALL MACHINED SURFACES WILL HAVE A SURFACE FINISH OF 125 MICROINCHES ANGLE ANY TOLERANCE OF ± 30' CONCENTRICITY WITHIN .010

THIRD ANGLE PROJECTION

UNLESS OTHERWISE SPECIFIED ALL WELDS SHOULD ADHERE TO THE LATEST FITT WELD INSPECIFICATION 101

CHANGE	R/L	REVISION	DATE
ECN-101958	A	RELEASED	8-1-08

Description: HYDRAULIC SCHEMATIC
Drawing Number: 4017968
Machine Type: NS TR10 2008
Model: TR10
Weight:
Scale:
Drawn: hhill
Date Drawn: 8-1-08
APVD Dwg: HH
APVD Dfrg: JBR
Matl: DOCUMENT ONLY

HTT
Harsco Track Technologies
Harsco
Columbia, SC

Part Number: 4017968
Size: D
Sheet: 3 of 3

Plotted by hhill on 8/4/2008 4017968.dft

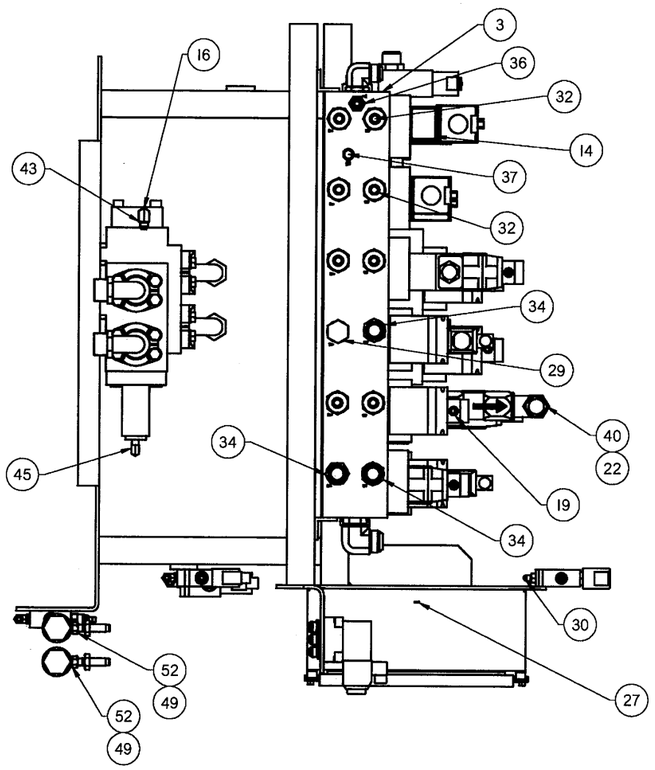

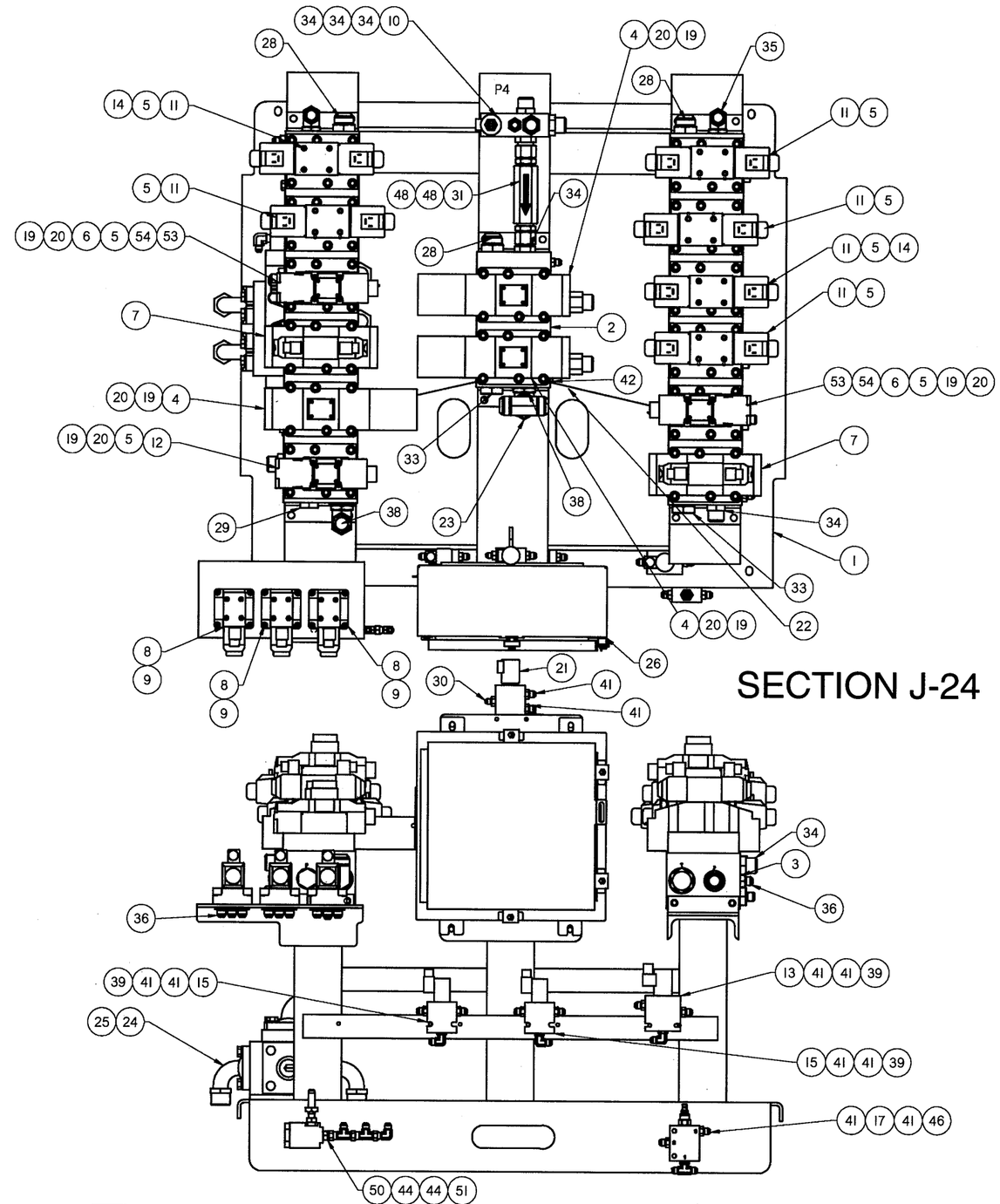

SECTION J-24

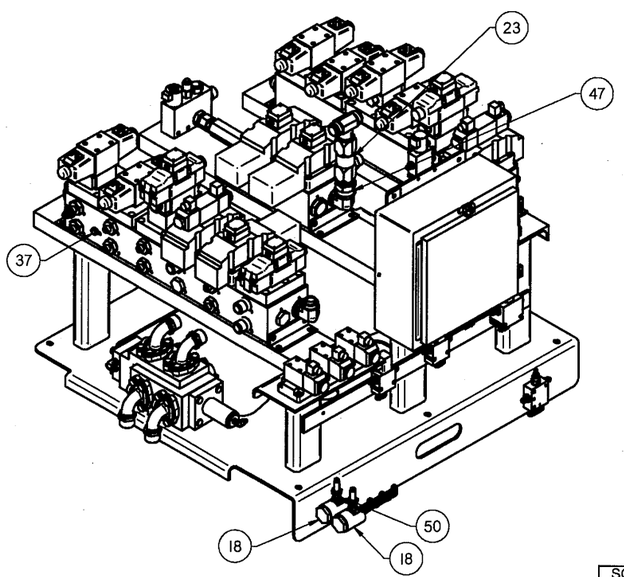

Item Number	Part Number	Description	Quantity
1	A8952WAB	MAJOR VALVING BRKT	1
2	A0963Y01	D08 MANIFOLD 2 STATIONS	1
3	4011687	D08 MANIFOLD 6 STATIONS	2
4	4011659	D08 HYD. PILOT OP. PRO. V.	3
5	4011712	D05 TO D08 MANIFOLD	9
6	4014967	VALVE, REDUCING/RELIEVING D05	2
7	4011802	D08 SOL. 4/3 DIR. VALVE	2
8	0-3361006-0-01	SUBPLATE (D03)	3
9	4011684	D03 VALVE 2/4	3
10	4011625	SOLENOID RELIEF VALVE	1
11	171833	D05 DBL SOL VALVE	6
12	4011661	D05 HYD.PILOT OP. VALVE	1
13	A0730Y04	VALVE, 3 WAY SOL. 24VDC	1
14	0-3336036-0-01	P PORT CHECK	2
15	A0730Y01	VALVE,3 WAY SOL	2
16	4011754	SELECTOR VALVE	1
17	A2130Y04	VALVE, PRESSURE RED	1
18	A5748Y01	IN-LINE FILTER	2
19	412116	D03 TAP IN SANDWICH A-B	6
20	0-3360011-0-01	D01 BLANK PLATE	6
21	4011653	SOLENOID VALVE	1
22	0-3336021-0-05	CHECK VALVE 1 1/4	1
23	F016331	1"-ORB / 1" JIC LONG STRT	2
24	0-3304145-0-12	SPLIT FLG 90DEG-24-20JIC	6
25	0-3304142-0-05	SPLIT FLANGE MOUNTING KIT	6
26	C3030WAD	JUNCTION BOX ASSY.	1
27	4010830	MVM WIRING DIAGRAM, NS	1
28	L423021	1 1/4 ORB X 1 1/4 JIC ADAPTER	3
29	F017193	-16 ORB HEX PLUG	3
30	L421708	FTG 3/8 ORB X 1/4 JIC ST.	2
31	0-3336021-0-07	CHECK VALVE 1 NPT	1
32	F040301	1" ORB X 1/2 JIC STR	18
33	0-3304030-0-08	ORING BOSS PLUG	2
34	L424015	1"-ORB / 1" JIC STRT	9
35	F014252	-16 ORB JIC 90	4
36	L420150	1/2 O-RING X 1/2 JIC STR	14
37	F015292	DC-PLUG 6-SAE HH	3
38	F017558	ELBOW 90 DEG -20 JIC ORB	2
39	L411939	3/8 O-RING BOSS - JIC 90 DEG	3
40	0-3304101-0-19	-20 MPJICJIC TEE	1
41	L423036	ADAPTER, 3/8 ORB - 3/8 JIC STR	11
42	L424676	O RING BOSS/PLUG	1
43	F012055	3/8 MP - 3/8 JIC Adapter 90	1
44	F013627	-6 SW. BRANCH TEE	2
45	F011937	DC-ELB90 4X4NPT	1
46	F014251	-6 ORB - JIC BRANCH TEE	1
47	F023880	1 1/4 FM SW JIC X 1 1/4 NPT STR	1
48	F024303	STR 16FSX16NPT	2
49	F040236	MP - 37° BULKHEAD ADAPTER	2
50	F012056	3/8 NPT JIC STR	2
51	0-3304148-0-05	3/8 SW JIC X 90 DEG JIC	1
52	L420105	HEX BUSHING, 3/8MP-1/4FP	2
53	4014966	VALVE, PROPORTIONAL D05H	2
54	0-3336008-0-03	DOUBLE P.O. CHECK D05	2

CONFIDENTIAL
© COPYRIGHT 2001 HARSCO TRACK TECHNOLOGIES. THIS DRAWING OR DOCUMENT IS THE PROPERTY OF HARSCO TRACK TECHNOLOGIES AND EMBODIES CONFIDENTIAL INFORMATION, TRADE SECRET INFORMATION, AND/OR KNOW-HOW THAT IS THE PROPERTY OF HARSCO TRACK TECHNOLOGIES. BY ACCEPTING THIS DRAWING OR DOCUMENT, THE RECIPIENT AGREES (1) NOT TO PROVIDE, OR OTHERWISE MAKE AVAILABLE, THE DRAWING OR DOCUMENT, OR ANY INFORMATION OR KNOW-HOW EMBODIED THEREIN, TO ANY THIRD PARTY AND (2) NOT TO REPRODUCE OR USE THE DRAWING OR DOCUMENT TO MANUFACTURE ANY APPARATUS OR DEVICE, WITHOUT THE PRIOR WRITTEN AUTHORIZATION OF HARSCO TRACK TECHNOLOGIES.

SOLID EDGE DRAWING

IMPLIED TOLERANCES
ALL DIMENSIONS ARE IN INCHES - TOLERANCE UNLESS OTHERWISE SPECIFIED

NOMINAL SIZE RANGE OVER	TO	INCH PLUS OR MINUS 2 PLACE DECIMAL	3 PLACE DECIMAL	NOMINAL SIZE RANGE OVER	TO	METRIC PLUS OR MINUS 1 PLACE DECIMAL	2 PLACE DECIMAL
0	6	.03	.005	0	150	0	13
6	24	.04	.008	150	500	1.0	25
24	-	.05	.010	-	500	1.5	.25

UNLESS OTHERWISE SPECIFIED ALL MACHINED SURFACES WILL HAVE A SURFACE FINISH OF 125 MICROINCHES ANGULAR TOLERANCE OF ± 30' CONCENTRICITY WITHIN .010

THIRD ANGLE PROJECTION

UNLESS OTHERWISE SPECIFIED ALL WELDS SHOULD ADHERE TO THE LATEST HTT WELDING SPECIFICATION 101

CHANGE	R/L	REVISION	DATE
ECN-101876	A	RELEASE	6-24-08

Description: MAJOR VALVING ASSY
Drawing Number: ----------
Model: 4017509.asm
Weight: 0.000 lbm
Scale:
Mat'l:
Machine Type: TR10, NS
Drawn: hhill
Date Drawn: 6-24-08
APVD Dwg: HH
APVD Eng: JBR

HTT
Harsco Track Technologies
Harsco
Columbia, SC

Part Number: 4017509
Size: D
Sheet: 1 of 1

Plotted by hhill on 6/24/2008 4017509.dft

PARTS LIST

ITEM NO	PART NUMBER	DESCRIPTION	QUANTITY
1	BLANK		
~~2~~	~~L420676~~	~~BATTERY SWITCH~~	~~1~~
~~3~~	~~0-3120002-0-01~~	~~STARTER SOLENOID (24V)~~	~~1~~
4	H5138Y01	LOCKOUT LEVER KIT, BATT.	1
5	A4992Y23	PIN, 1/4" BALL LOCK	2
6	A4992Y24	LANYARD, 6"-LG.	2
7	C3244Y01	TIEDOWN ANGLE	1
8	BLANK		
9	4012283	ELECTRICAL SCHEMATIC, MACHINE	REF
10	BLANK		
11	BLANK		
12	4012342	JUNCTION BOX WIRING DIAG	REF
13	A7519YAA	CL510 (BATTERY-GROUND)	1
14	A7520YAA	CL511 (BATTERY JUMPER)	1
15	A7521YAA	CL512 (BATTERY-BAT. SW)	1
~~16~~	~~A7523YAA~~	~~CL514 (AIR DRYER)~~	~~1~~
17	A7524YAA	CL515 (BAT. SW-STARTER)	1
18	BLANK		
19	B3027X03	MATTING, BATTERY BOX	1
20	0-2403434-0-02	CABLE ASSY (GRD. STRAP)	1
21	A0036063	3/8-16 x 1" HEX HD SCR	9
22	L40818	STRAIN RELIEF	2
23	L40835	MARR CONNECTOR	6
~~24~~	~~A0071063~~	~~3/8-16 x 3/4 WELD STUD~~	~~3~~
25	A0059003	3/8 FLAT WASHER	7
26	L40387	3/8-16 LOCK NUT	7
27	A0071057	3/8-16 WING NUT	4
28	D6443Y01	BATTERY TERM. PROTECTOR	2
29	D6443Y02	BATTERY TERM. PROTECTOR	2
30	D6443Y03	TERMINAL INSULATOR CAP	3
31	D6443Y04	TERMINAL INSULATOR CAP	3
~~32~~	~~A0050078~~	~~1/4-20 x 3/4 RD HD MACH SCR~~	~~2~~
33	A0059001	1/4 FLAT WASHER	68

ASSEMBLY IDENTIFIER

TR10 24VDC (NS SUPPLIED JD)

ASSEMBLY DESCRIPTION

ER
DR
CK
APP
MF

REVISIONS

NO	ER	DESCRIPTION	DR	CK	APP	MF
A	13080.4	NEW RELEASE	HH			
B	13080.13	DELETED ITEM 2. 10-6-04	HH	DEB	APD	
C	131172	ADDED IT. 4, 5 & 6. DELETED IT. 32. 2-7-05	HH	DEB	APD	
D	13144.4	DELETED IT-3, ADDED IT-28 THRU 31. 8-15-05	HH	DES	APD	
E	100780	ITEM 9 WAS C2543V01 AND ITEM 12 WAS C3014W02. 9-12-06	HH	DES	JBR	
F	100886	DELETED ITEMS 16 & 24. ITEM 21 QTY WAS 2. ITEM 25 QTY WAS 3. ITEM 26 QTY WAS 3. 12-4-06	HH	DES	DES	
G	101974	NO CHANGE				

SHEET 1 CONT ON 2
LAST ECR .4 13144
CHECKED dvan
DATE 18-Aug-05
DWG NO C2982WAE

DWG NO C2982WAE
SHEET 1
CONT ON 2
DESCRIPTION (24) GENERAL ELECTRICAL ASSY.
DRAWN HH
DATE 8-19-04
CHECKED DEB
DATE 8-19-04
APP APD
DATE 8-19-04
APP
DATE

Fairmon / Amper™
2401 Edmund Road-Box 20
Cayce-West Columbia,
South Carolina 29171-0020
(803) 822-9160

PARTS LIST

ITEM NO	PART NUMBER	DESCRIPTION	QUANTITY
34	L40237	1/4-20 LOCK NUT	68
35	A0050079	1/4-20 x 1" RD HD MACH SCR	4
36	F014406	CIRCUIT BREAKER 30-AMP	1
37	L422321	HOSE CLAMP	24
38	L422322	HOSE CLAMP	16
39	A0071062	1/4-20 x 3/4 WELD STUD	60
40	L420492	6" TIE WRAP	50
41	L420491	3 1/2" TIE WRAP	25
42	L425405	1/2 PIPE COUPLING CLOSE	2
43	L40830	1/2 LOCK RING	4
44	0-3221005-0-00	CONDULET	2
45	A0050055	#10-24 x5/8 RD HD MACH SCR	6
46	A0061006	#10 LOCKWASHER	6
47	A0055006	#10-24 HEX NUT	6
48	D6454XAA	SWITCH BOX KIT	1
49	200640	ENCLOSURE	2
50	189832	DECAL	2
51	F020177	HOLE SEAL	2
52	F040111	CONTACT BLOCK	2
53	F040119	OPERATOR	2
54	F040178	PUSH BUTTON	2
55	133115	VENT PLUG	2
56	0-3230020-0-01	VALVE CONNECTOR	1
57	4012284	CABLE DIAGRAM	REF
58	C2895WAE	ENG CONTROL PANEL ASSY	1
59	4012388	WIRING DIAGRAM, SW HD BOX	REF
60	0-3201001-0-14	GROMMET	1
61	4018036	CONTROL BOX, MODIFIED SW HD	1
62	C2884V04	ENGINE CONTROL PANEL WIRING DIAG	REF
63	176444	CABLE, 16/2 SUPER-TREX (FT)	50
64	0-3211009-0-08	#6 - AWG WIRE (FT)	20
65	L425593	LUG (#6)	6
66	L420611	CONNECTOR CABLE	1

ASSEMBLY IDENTIFIER

TR10 24VDC (NS SUPPLIED JD)

REVISIONS

NO	ER	DESCRIPTION	DR	CK	APP	MF
A	13080.4	NEW RELEASE	HH			
B	13080.13	ADDED ITEMS 48 THRU 55 AND 63. 10-6-04	HH	DEB	APD	
E	100780	ITEM 57 WAS C2953V02, ITEM 59 WAS C2960W02, ITEM 62 WAS C2884V03. 9-12-06	HH	DES	JBR	
F	100866	ADDED ITEMS 60 AND 64 THRU 66. 12-4-06	HH	DES	DES	
G	101974	ADDED ITEM 36. ITEM 61 WAS C2969WAB. 8-8-08	HH	HH	JBR	

ASSEMBLY DESCRIPTION

ER
DR
CK
APP
MF

Fairmon / Amper™
2401 Edmund Road-Box 20
Cayce-West Columbia,
South Carolina 29171-0020
(803) 822-9160

DWG NO C2982WAE
SHEET 2
CONT ON -
DESCRIPTION (24) GENERAL ELECTRICAL ASSY.
DRAWN HH
DATE 8-19-04
CHECKED DEB
DATE 8-19-04
APP APD
DATE 8-19-04
APP
DATE

SHEET 2
CONT ON -
LAST ECR .4 13144
CHECKED dvan
DATE 18-Aug-05
DWG NO C2982WAE

ENG.DWG.NO.
C2982WAE

WIRING NOTES: JOHN DEERE ENGINE

1. ~~DISCONNECT WIRE FROM ALTERNATOR "POS." TERMINAL AND STARTER POSITIVE TERMINAL. (TAPE UP AND TIE BACK)~~
2. CONNECT FUSED "RED" AND "BLACK" WIRES FROM ENGINE ECM HARNESS "REAR OF ENGINE" TO POSITIVE AND GROUND ON BATTERY. USE ITEM 36 ON POS. LEAD. (POWERING CONTROL BOX).
3. INSTALL SUPPLIED SUPPRESSION DIODE ACROSS STARTER MOTOR SLAVE RELAY.
4. CONNECT JD CONTROL BOX CABLE TO RECEPTICLE INSIDE ENGINE COVER.

REVISIONS

NO	ER	DESCRIPTION	ZONE	DR	CK	APP	MF
A	13050.4	NEW RELEASE		HH			
B	13080.13	DELETED IT-2, ADDED ITEMS 48 THRU 55 AND 63. 10-8-04	A1, A3	HH	DEB	APD	
C	13117.2	ADDED ITEMS 4, 5 & 6. DELETED ITEM 32.	A1, B4	HH	DEB	APD	2-7-05
D	13144.4	REMOVED IT-3, ADDED IT-28 THRU 31.	A1, A2 B1, C3	HH	DES	APD	8-15-05
E	100780	ADDED WIRING NOTES: JOHN DEERE ENGINE.	C1, C4	HH	DES	JBR	9-12-06
F	100886	MINOR UPDATES: ADDED GROUND CABLES. DELETED IT-16 & 24. ADDED IT-60 & 64 THRU 66.	ALL	HH	DES	DES	12-4-06
G	101974	WIRING NOTES: J D ENGINE. DELETED NOTE 1. NOTE 2, CHANGED "STARTER" TO "BATTERY". ADDED ITEM 36 AND NOTE 2 UPDATE.	B-1	HH	HH	JBR	8-18-08

SECTION L-1

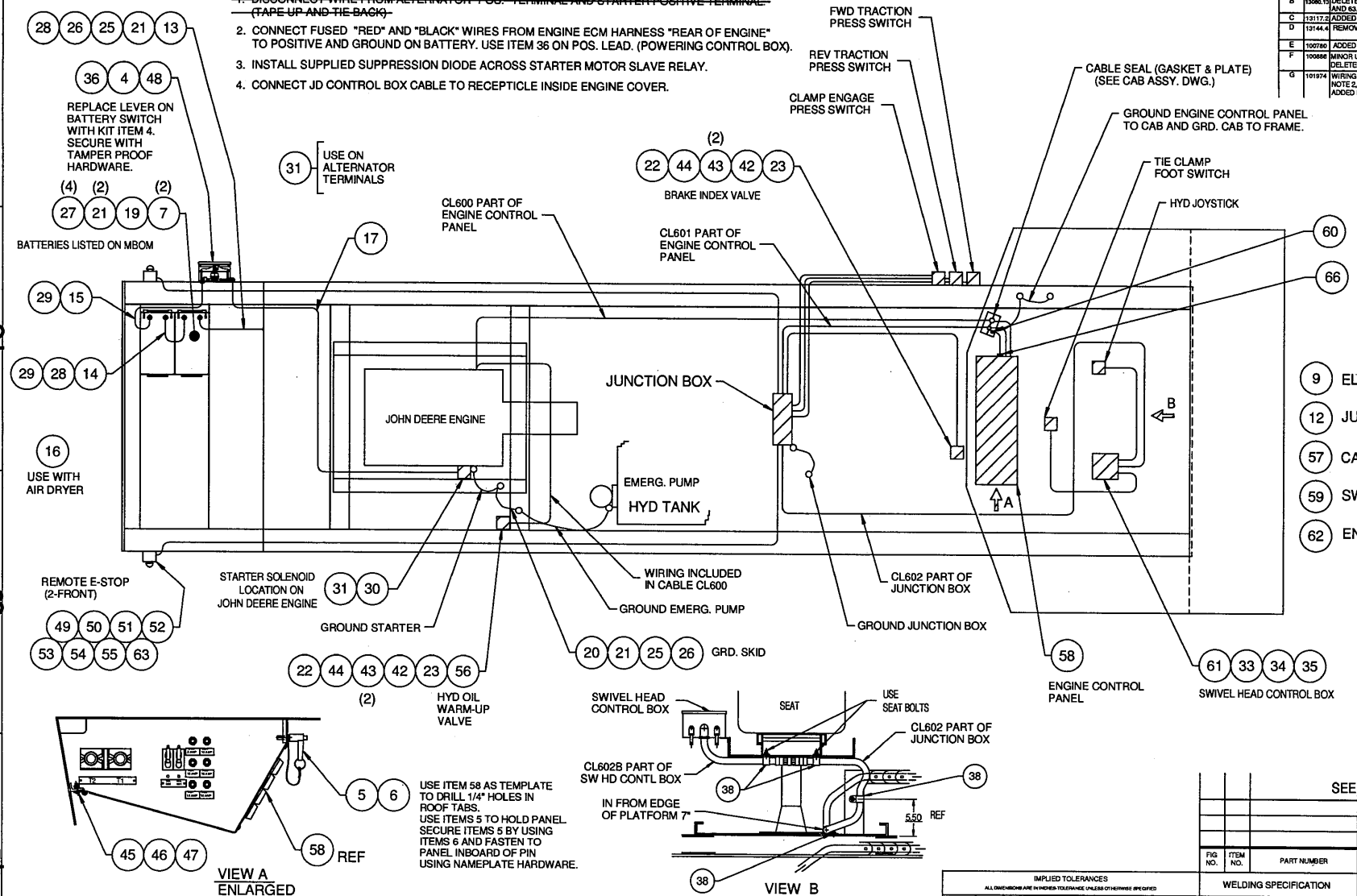

USE ITEMS 33, 34, 37, 38, 39, 40 AND 41 AS REQUIRED.

NOTE: USING ITEMS 64, 65, 21, 25 AND 26 APPLY STANDARD GROUNDS.
CAB ENG. CNTRL PNL TO CAB FRAME. CAB FRAME TO MAINFRAME.
JUNCTION BOX TO MAINFRAME. EMERGENCY PUMP MOTOR TO MAINFRAME.
ENGINE STARTER MOTOR TO MAINFRAME. ENGINE SKID FRAME TO MAINFRAME.
WELD ITEMS 21 TO MAINFRAME.

SEE SEPARATE PARTS LIST

FIG. NO.	ITEM NO.	PART NUMBER	DESCRIPTION AND MATERIAL SIZE (REF.ONLY)	QTY

IMPLIED TOLERANCES
ALL DIMENSIONS ARE IN INCHES-TOLERANCE UNLESS OTHERWISE SPECIFIED

NOMINAL SIZE RANGE OVER	TO	PLUS OR MINUS FRACTION	2 PLACE DECIMAL	3 PLACE DECIMAL	NOMINAL SIZE RANGE OVER	TO	PLUS OR MINUS FRACTION	2 PLACE DECIMAL	3 PLACE DECIMAL
-	1	1/64	.01	.005	6	24	3/64	.03	.006
1	6	1/32	.02	.005	24	-	1/16	.05	.010

ANGULAR DIMENSIONS PLUS OR MINUS 1 DEGREE
ALL MACHINED SURFACES TO HAVE A SURFACE FINISH OF 125 MICRON/CHES UNLESS OTHERWISE SPECIFIED.

WELDING SPECIFICATION
UNLESS OTHERWISE SPECIFIED ALL WELDS SHOULD ADHERE TO FAIRMONT TAMPER WELDING SPECIFICATION NO. 101

WEIGHT lbs
3rd ANGLE PROJECTION
DO NOT SCALE
SHEET 1 CONT. - OF -

DESCRIPTION (24)
GENERAL ELECTRICAL ASSY.

DRAWN H	HH	DATE	8-19-04
CHECKED	DEB	DATE	8-19-04
APP'E NO	APD	DATE	8-19-04
APP MFG		DATE	
LAST EGR.	13144 .4	CHECKED	Dwgn.
		DATE	18-Aug-05

MACHINE TYPE
TR10 (NS SUPPLIED JD)

Fairmon / Tamper™
2401 Edmund Road/Box 20
Cayce-West Columbia, South Carolina 29171-0020
(803) 822-4164

ENG.DWG.NO.
C2982WAE

THIS DOCUMENT CONTAINS PROPRIETARY INFORMATION AND SUCH INFORMATION MAY NOT BE DISCLOSED TO OTHERS FOR ANY PURPOSE OR USED FOR MANUFACTURING PURPOSES WITHOUT THE WRITTEN PERMISSION OF FAIRMONT TAMPER.

Section A
Cab Components

ENG.DWG.NO.
B6242XAA

REVISIONS							
NO	ER	DESCRIPTION	ZONE		CK	APP	MF
1	4655.9	RELEASED	ALL	KK			MF
2	4859.1	1/2-13 THD WAS 3/8-16 THD. 9/16 WAS 7/16, IT. 2 WAS A0036072 IT. 3 WAS A0059003, IT. 4 WAS L40387		KK	DGV 4-25	HAWK 4-28-89	MF
3	5244.1	ADDED IT. 5-7 & DETAIL "A".	A2	KK	DGV		
4	6340.17	DELETED IT. 5-7 P/N B4404Y01, 5-14-93 A0050041 & A0061005. (REDREW DWG.) ADDED LUG DN HANDRAIL & DETAIL "B".	PL. ALL A3,A1	HH	JA		
5	6340.26	ADDED IT. 5-10 (DOOR HOLDER), & VIEW "C".	PL. C1	HH	JA	HAWK	6-15-93
F	13117.4	REPLACED 1/2 BOLTS AND RUBBER PADS WITH 5/8 BOLTS & SHOCK MOUNTS.	ALL	HH	DEB	APD	3-14-05

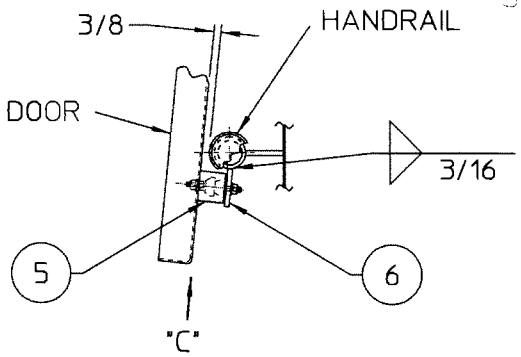

SECTION B-B

ASSEMBLE LUG AND DOOR HOLDER. SWING DOOR OPEN. USING DOOR HOLDER HELD FLUSH AGAINST DOOR, POSITION LUG ON HANDRAIL LEAVING 3/8 BETWEEN DOOR AND HANDRAIL CAP 1 1/4 DOWN. TACK WELD LUG, REMOVE RUBBER DOOR HOLDER FROM LUG. WELD LUG AS SHOWN. REPLACE RUBBER AFTER PART HAS COOLED. MARK POSITION ON DOOR TO MOUNT SOCKET PART OF HOLDER, DRILL 9/32 Ø HOLE FOR MOUNTING WITH HARDWARE.

DETAILS
SCALE X5

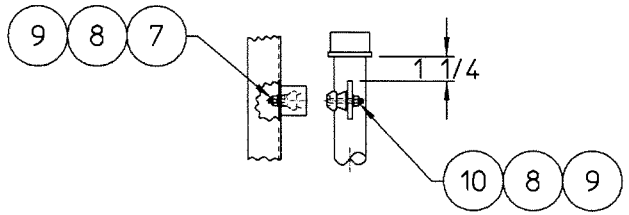

VIEW C
(SHOWN WITH DOOR HOLDER APART)

SECTION A-1

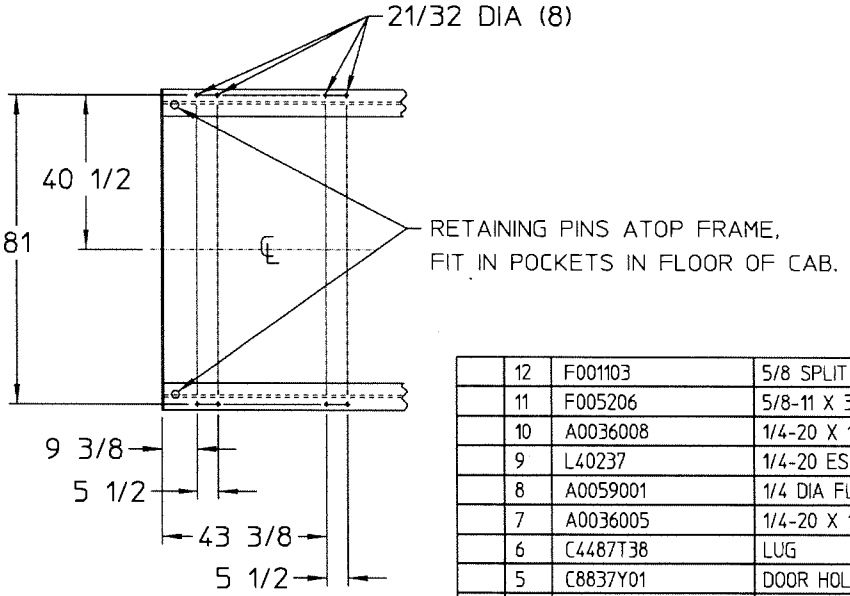

SECTION A-A
TOP OF FRAME

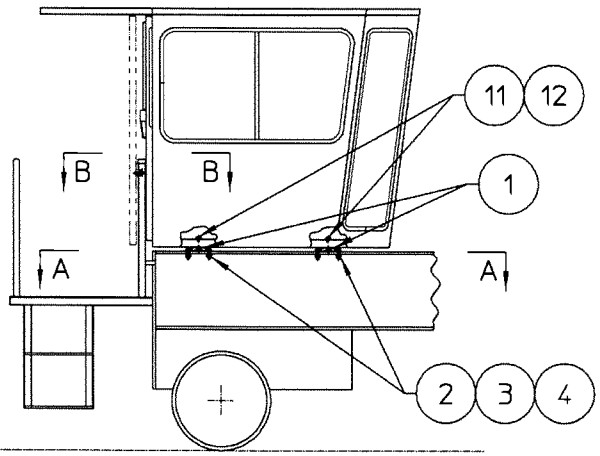

FIG NO.	ITEM NO.	PART NUMBER	DESCRIPTION AND MATERIAL SIZE (REF.ONLY)	QTY
	12	F001103	5/8 SPLIT LOCK WASHER	4
	11	F005206	5/8-11 X 3 1/4 HHDCPSCR	4
	10	A0036008	1/4-20 X 1 3/4 HEX HD CPSCR	1
	9	L40237	1/4-20 ESNA NUT	2
	8	A0059001	1/4 DIA FLAT WASHER	2
	7	A0036005	1/4-20 X 1" HEX HD CPSCR	1
	6	C4487T38	LUG	1
	5	C8837Y01	DOOR HOLDER	1
	4	F012452	5/8-11 ESNA NUT	8
	3	F009425	5/8 FLAT WASHER	8
	2	F005192	5/8-11 X 1 3/4 HHDCPSCR	8
	1	0-3643002-0-20	SHOCK MOUNT	4

IMPLIED TOLERANCES
ALL DIMENSIONS ARE IN INCHES-TOLERANCE UNLESS OTHERWISE SPECIFIED

NOMINAL SIZE RANGE		PLUS OR MINUS			NOMINAL SIZE RANGE		PLUS OR MINUS		
OVER	TO	FRACTION	2 PLACE DECIMAL	3 PLACE DECIMAL	OVER	TO	FRACTION	2 PLACE DECIMAL	3 PLACE DECIMAL
-	1	1/64	.01	.003	6	24	3/64	.03	.008
1	6	1/32	.02	.005	24	-	1/16	.05	.010

ANGULAR DIMENSIONS PLUS OR MINUS 1 DEGREE

ALL MACHINED SURFACES TO HAVE A SURFACE FINISH OF 125 MICROINCHES UNLESS OTHERWISE SPECIFIED.

WELDING SPECIFICATION

UNLESS OTHERWISE SPECIFIED ALL WELDS SHOULD ADHERE TO FAIRMONT TAMPER WELDING SPECIFICATION NO. 101

WEIGHT lbs.

3rd ANGLE PROJECTION

DO NOT SCALE

SHEET 1 CONT. – DN

DESCRIPTION (24)
CAB INSTALLATION

DRAWN KK	DATE 1-5-89	MACHINE TYPE TR10	
CHECKED DGV	DATE 1-30-89		
APP-ENG HAWK	DATE 1-27-89		
APP-MFG	DATE		
LAST ECR. 13117 .4 1	CHECKED dvgn	ENG.DWG.NO. B6242XAA	
	DATE 19-Sep-05		

Fairmont Tamper™ 2401 Edmund Road-Box 20 Cayce-West Columbia, South Carolina 29171-0020 (803) 822-9160

X
X25
PLOT .04

THIS DOCUMENT CONTAINS PROPRIETARY INFORMATION AND SUCH INFORMATION MAY NOT BE DISCLOSED TO OTHERS FOR ANY PURPOSE OR USED FOR MANUFACTURING PURPOSES WITHOUT THE WRITTEN PERMISSION OF FAIRMONT TAMPER.

PARTS LIST

FIG	ITEM NO	PART NUMBER	DESCRIPTION (29)		AA	~~AB~~	~~AC~~	AD	AE	AF	AG
					QUANTITY						
	1	B5866VAA	CAB WELDMT		1	1	1		1	0	0
	~~2~~	~~A0222T61~~	~~GLASS~~		~~2~~	~~0~~	~~0~~				
	~~3~~	~~A0222T62~~	~~GLASS~~		~~1~~	~~0~~	~~0~~				
	~~4~~	~~A0222T64~~	~~GLASS~~		~~1~~	~~0~~	~~0~~				
	5	B5875W03	SLIDING GLASS		2	2	0				
	~~6~~	~~B6003Y01~~	~~GLASS, FRONT~~		~~2~~	~~0~~	~~0~~				
	~~7~~	~~0-3044002-0-01~~	~~WEATHERSEAL~~	(FT)	~~85~~	~~85~~	~~85~~				
	8	0-3502007-0-01	WINDSHIELD WIPER DRIVE		2	2	2		2	2	2
	9	0-3502050-0-01	WIPER ARM		2	2	2		2	2	2
	10	0-3502003-0-01	WIPER BLADE		2	2	2		2	2	2
	11	0-2301261-0-01	DOME LIGHT		1	1	1		1	1	1
	12	Z780309Z	HORN		1	1	1		1	1	1
	~~13~~	~~B5864WAA~~	~~DOOR WELDMT~~		~~1~~	~~1~~	~~1~~				
	~~14~~	~~B4633XAB~~	~~UPPER WALL HINGE~~		~~1~~	~~1~~	~~1~~				
	~~15~~	~~B4659XAB~~	~~LOWER WALL HINGE~~		~~1~~	~~1~~	~~1~~				
	~~16~~	~~B4640X02~~	~~HINGE ANGLE~~		~~1~~	~~1~~	~~1~~				
	17	B4618Y01	CAB LOCK		1	1	1		1	1	1
	18	B4615Y01	DROP HANDLE		1	1	1		1	1	1
	19	B4665X02	ADJ. PLATE		1	1	1		1	1	1
	~~20~~	~~A0036034~~	~~5/16-18 x 1 HEX HD CPSCR~~		~~6~~	~~6~~	~~6~~				
	~~21~~	~~L40388~~	~~5/16-18 ESNA NUT~~		~~6~~	~~6~~	~~6~~				
	22	A0050054	10-24 x 1/2 RND HD MACH SCR		2	2	2		2	2	2
	23	A0061006	#10 LOCK WASHER		13	13	13		13	13	13
	24	A0055006	10-24 HEX NUT		5	5	5		5	5	5
	25	A3363Y02	TRIM LOCK W/SEAL	(FT)	16	16	16		16	16	16
	~~26~~	~~L40177~~	~~CHAIN~~	(FT)	~~1½~~						
	27	A0036005	1/4-20 x 1" HEX HD CPSCR		17	17	17		17	17	17
	28	L40237	1/4-20 LOCKNUT		9	9	9		9	9	9
	~~29~~	~~A0059025~~	~~#10 FLAT WASHER~~		~~1~~						
	~~30~~	~~A0071010~~	~~#10 (TYPE AB) x 1" PAN HD SELF TAPPING SCREW~~		~~1~~						
	31	L423662	MALE CONNECTOR		4	4	4		4	4	4
	32	L423661	FEMALE CONNECTOR		2	2	2		2	2	2
	33	A9297Y04	WIRE #14 AWG	(FT)	30	30	30		30	30	30

E E ASSEMBLY IDENTIFIER							
AA	~~AB~~	~~AC~~	AD	AE	AF	AG	
TR-10 PHASE III CAB	~~SOLEX FRONT & REAR~~	~~LEXAN (TINTED)~~	94 AUSTRALIAN TR-10 NOT UNLIMITED (SEE PROJ. FILE 943362)	TRIO, USSC SUSP. SEAT	TRIO, NS 2004	TRIO 6-WINDOW CAB STANDARD SEAT 2005	

REVISIONS

NO	ER	DESCRIPTION	DR	CK	APP	MF
1	ECR 4655	RELEASED	KK			
2	ECR 4655.4	ADDED SHEET 2	KK		Hawk	
3	ECR 4655.9	IT 14 P/N WAS B4633XAA IT. 15 P/N WAS B4659XAA IT. 16 P/N WAS B4640X01. IT 4 P/N WAS A0222T63 DELETED ITEMS 26, 29 & 30	KK		Hawk 1-27-89	
11	6834.10	IT 19 WAS B4665X01 & IT 23 Qty WAS 5	SPB		Hawk 3-3-92	
12	5915.1	DELETED ITS 13-16 & 20, 21 3-23-92	SPB		Hawk	
13	5953.1	Qty IT 27 & 28 WAS 3. 5-15-92	SPB		Hawk	
14	6262.1	IT. 27 & 28 QTY. WERE 7 & 7 3-25-93	HH		Hawk	
15	6345.17	DELETED TABS: AB & AC. 5-18-93 DELETED IT. 2-7. (MOVED TO GLASS INSTL. DWG. D0512W) IT. 27 & 28 QTY. WERE 17 & 9.	HH		Hawk	
16	6345.26	IT. 27 & 28 QTY. WAS 18 & 11. 6-10-93	HH		Hawk	
18		NO CHG.				

E E ASSEMBLY DESCRIPTION							
ER	4884	5212.2		13050 .2	13080 .4	13117 .1	
DR	Hawk 4-3-89	KK		HH 1-9-94	HH 8-18-04	HH 2-3-05	
CK					KRM		
APP		Hawk 9-6-91					
MF							

ENG DWG NO: B6004V

SHEET 1 CONT ON 2

DESCRIPTION (30): CAB ASSY

DRAWN: Kenny Richardson

DATE: 11-11-88

CHECKED: [illegible]

DATE: 11-22-88

APP: [illegible]

DATE

APP

DATE

SHEET 1 CONT. ON 2 END DWG NO B6004V

SCANNED
IMAGES OF THIS DRAWING HAVE BEEN SCANNED INTO THE CADCAMDATABASE
EC 2/8/05
VERIFIED DATE

Tamper
TAMPER CORP
2401 Edmund Road-Box 20
Cayce-West Columbia
South Carolina 29171-0020
Tel (803) 794-9160

PARTS LIST

FIG	ITEM NO	PART NUMBER	DESCRIPTION (29)	AA	AB	AC	AD	AE	AF	AG
				E		E				
			ASSEMBLY IDENTIFIER							
				QUANTITY						
	34	~~B6365YAA~~	~~BASE WELDM'T~~	~~1~~	~~1~~	~~1~~				
	35	B6098WAA	FOOT CONTROL ASS'Y	1	1	1		0	0	1
	~~36~~	~~B5740T10~~	~~SPACER~~	~~1~~	~~1~~	~~1~~				
	~~37~~	~~L41764~~	~~3/4-10 ESNA NUT~~	~~1~~	~~1~~	~~1~~				
	38	0-3502030-0-03	SEAT.	1	1	1		0	0	1
	39	A7502XAA	CONTROL MTG BRACKET	1	1	1		0	0	1
	40	Z710859	ARM REST	1	1	1		1	1	1
	41	A0071019	#10 x 1/2 WOOD SCREW	2	2	2		2	2	2
	42	L410613	CAM FOLLOWER	8	8	8		8	8	8
	43	A0059004	7/16 FLATWASHER	8	8	8		8	8	8
	44	L410612	7/16-20 ESNA NUT	8	8	8		8	8	8
	45	A0036035	5/16-18 x 1 1/4 HEX HD CAPSR	4	4	4		4	4	4
	46	A0059002	5/16 FLAT WASHER	18	16	16		18	18	18
	47	A1103Y01	STEEL CABLE FT.	12	12	12		12	12	12
	48	A5524Y02	1/4 PLASTIC TUBING FT	12	12	12		12	12	12
	49	A4577T02	SWAGE	2	2	2		2	2	2
	50	0-3641001-0-13	SPRING	1	1	1		1	1	1
	51	A0066002	1/4-20 x 2 EYE BOLT	3	3	3		3	3	3
	52	L420851	1/8 MP-FP 90°	2	2	2		2	2	2
	53	L420853	1/8 MP-1/4 JIC 90°	1	1	1		1	1	1
	54	L423852	1/8 FP-FP-FP TEE	1	1	1		1	1	1
	55	L423271	1/8 MP-1/4 JIC STR.	1	1	1		1	1	1
	56	0-3304106-0-12	1/8 NPT NIPPLE STR.	1	1	1		1	1	1
	57	D1863Y01	DOOR LOCK SHIM	3	3	3		3	3	3
	~~58~~	~~B6003Y02~~	~~GLASS, FRONT (SOLEX)~~	~~0~~	~~2~~	~~0~~				
	~~59~~	~~A0222T68~~	~~GLASS (SOLEX)~~	~~0~~	~~2~~	~~0~~				
	~~60~~	~~A0222T69~~	~~GLASS (SOLEX)~~	~~0~~	~~1~~	~~0~~				
	~~61~~	~~A0222T70~~	~~GLASS (SOLEX)~~	~~0~~	~~1~~	~~0~~				
	~~62~~	~~B6114YAA~~	~~LATCH INSTL.~~	~~2~~	~~2~~	~~2~~				
	63	A0036001	1/4-20 x 1/2 HEXHDCPSCR	4	4	4		4	4	4
	64	A4595XAB	FLOOR MAT INST'L	1	1	1		1	1	1
	~~65~~	~~A0222T99~~	~~GLASS (LEXAN)~~	~~0~~	~~0~~	~~2~~				
	~~66~~	~~C5869T01~~	~~GLASS (LEXAN)~~	~~0~~	~~0~~	~~1~~				

ENG DWG NO: B6004V

SHEET 2 CONT ON 3

DESCRIPTION (30): CAB ASSEMBLY

DRAWN: [illegible] DATE: 11-29-84

CHECKED: DATE:

APP: [illegible] DATE: 12-5-91

APP: SCANE

	AA	AB	AC	AD	AE	AF	AG
	TR-10 PHASE III WIDE CAB	SOLEX FRONT REMR	LEXAN (CHANGED)	94 AUST TR-10 NOT DOCUMENTED (SEE 94 AUST TR-10)	TRIO, USSC SUSP. SEAT	TRIO, NS 2004	TRIO 6-WINDOW CAB STANDARD SEAT 2005
ASSEMBLY DESCRIPTION							
ER		4896	4912		13050 .2	13080 .4	13117 .1
DR		Hawk 4389	KRD		HH 1-9-94	HH 8-18-04	HH 2-3-05
CK							
APP		Hawk 4-16-91					
MF							

REVISIONS

NO	ER	DESCRIPTION	DR	CK	APP	MF
2	ECN 4655.4	RELEASED	KK			
3	ECN 4655.9	IT 43 WAS A0061012. IT. 37 WAS L40944. IT. 34 WAS B5938W01. ADDED ITEMS #5 & 56	KK		Hawk	
4	ECN 4849	ADDED ITEM 57	KK		Hawk	
5	4843/16	ADDED ITEM 62 4-28-89	KK		Hawk	
6	4787.3	ADDED ITEM 63 1-19-90	KK		Hawk	
7	5256.1	IT. 63 P/N WAS A0052014 5-21-90	KK		Hawk	
8	5351.1	ADDED IT #64 9-4-90	KK		Hawk	
9	—	No Change				
10	5599.1	IT. 38 WAS Y763358-001 6-15-91	KRD		Hawk	
13	5953.1	DELETED ITS 39, 36 & 37 5-15-92	SPB		Hawk	
15	6340 .17	DELETED TABS: AB & AC. 5-18-93 DELETED IT. 58-62, 65 & 66 (MOVED TO GLASS INSTL. DWG. D0512W)	HH		Hawk	
16	6340 .26	IT. 46 QTY. WAS 16. 6-10-93	HH		Hawk	
18	6657 .3	IT. 57 WAS B4625Y01, QTY WAS 6, 11-4-93	Hawk			

ON DWG SHEET NO: 2 3

B6004V

Tamper

TAMPER CORP.
2401 Edmund
Cayce
South
Tel

PARTS LIST

FIG	ITEM NO	PART NUMBER	DESCRIPTION (29)	AA	~~AB~~	~~AC~~	AD	AE	AF	AG
				QUANTITY						
	~~67~~	~~C5869T02~~	~~GLASS (LEXAN)~~	~~0~~	~~0~~					
	~~68~~	~~B6003Y03~~	~~GLASS, FRONT (LEXAN)~~	~~0~~	~~0~~	~~2~~				
	~~69~~	~~B5875W09~~	~~SLIDING WINDOW (LEXAN)~~	~~0~~	~~0~~	~~2~~				
	70	A0050059	10-24 × 1 1/4 RND HD MACH SCR	6	6	6		6	6	6
	71	A0050061	10-24 × 2 RND HD MACH SCR	2	2	2		2	2	2
	72	0-3011001-0-79	#10 ESNA NUT	6	6	6		6	6	6
	73	C7442X02	CHAIN PLATE	1	1	1		1	1	1
	74	C5404XC3	CABLE CARRIER	1	1	1		1	1	1
	75	A0059001	1/4 FLAT WASHER	6	6	6		6	6	6
	76	A0061008	1/4-20 MED LOCKWASHER	12	12	12		12	12	12
	77	A0041043	1/4-20 SOC. HD. CAP SCREW	8	8	8		8	8	8
	78	B9439WAA	CAB INSULATION KIT	1	1	1		1	1	1
	79	0-3106004-0-01	BACK-UP ALARM	1	1	1		1	1	1
	80	L420481	GROMMET	1	1	1		1	1	1
	81	A9297Y03	# 16 AWG WIRE (FT.)	10	10	10		10	10	10
	82	L422500	TERMINAL EYE # 14-16 AWG	3	3	3		3	3	3
	83	A0050078	1/4-20 x 3/4 RD. HD. MACH. SCR.	2	2	2		2	2	2
	84	C3054Y01	GASKET (CABLE SEAL)	1	1	1		1	1	1
	85	C3055Y01	PLATE (CABLE SEAL)	1	1	1		1	1	1
	~~86~~	~~C8837Y01~~	~~DOOR HOLDER~~	~~1~~						
	~~87~~	~~C4487T38~~	~~LUG~~	~~1~~						
	~~88~~	~~A0036008~~	~~1/4-20 x 1 3/4 HEX HD CPSCR~~	~~1~~						
	89	L423931	PULL HANDLE	1				1	1	1
	90	A0036034	5/16-18 x 1" HEX HD CPSCR	2				2	2	2
	91	L40388	5/16-18 ESNA NUT	2				2	2	2
	92	B6098WAB	FOOT CONTROL ASSY	0				1	1	0
	93	B2379Y15	SUSPENSION SEAT	0				1	1	0
	94	A7502XAC	CONTROL MTG. BRKT.	0				1	1	0
	95	B5866VAB	CAB WELDM'T (6-WINDOW MacBONE AC)	0				0	1	1

ASSEMBLY IDENTIFIER: ~~E~~ ~~E~~

	TR-10 PHASE III WIDE CAB	~~SOLEX FRONT + REAR~~	~~LEXAN (TINTED)~~	94 AUST. TR-10 NOT DOCUMENTED (SEE FREQ. FIGS 94326-5)	TR10, USSL SUSP. SEAT	TR10, NS 2004	TR10 6-WINDOW CAB STANDARD SEAT 2005
ER					13050 .2	13080 .4	13117 .1
DR					HH 1-9-94	HH 8-18-04	HH 2-3-05
CK							
APP							
MF							

ASSEMBLY DESCRIPTION: ~~E~~ ~~E~~

REVISIONS

NO	ER	DESCRIPTION	DR	CK	APP	MF
10		REL				
11	5834.10	ADDED IT. 70-72 3-3-92	SRB		Hawk	
12	5935.1	ADDED ITS 73-77 5-15-92	SRB		Hawk	
14	6262.1	IT. 75 QTY. WAS 4. ADDED IT. 78-85.	HH		Hawk	
15	6340.17	DELETED TABS: AB & AC. 5-18-93 DELETED IT. 67-69. (MOVED TO GLASS INSTL. DWG. D0512W) ADDED IT. 86-88. IT. 75 QTY. WAS 6.	HH		Hawk	
16	6340.26	DELETED IT. 86-88. MOVED TO DWG. B6242XAA ADDED IT. 89-91. IT. 75 QTY. WAS 8. 6-10-93	HH		Hawk	
18		NO CHG.				

ENG DWG NO: B6004V

SHEET: 3 — CONT ON

DESCRIPTION (30): CAB ASSY

DRAWN: K DUNN

DATE: 9-10-91

CHECKED: 3/3/92

APP: Hawk

DATE: 9-16-91

TAMPER CORP.
2401 Edmund Road-Box 20
Cayce West Columbia
South Carolina 29171-0020
Tel. (803) 794-9130

SCANNED
PROPERTY OF TRANSPORTATION HISTORY MUSEUM OF THE PIEDMONTS
EC 2/8/05
INITIAL DATE

ENG. DWG. NO. B6004V

NO	EN	DESCRIPTION	ZONE	DR	CK	APP	MF
1	[illegible]	RELEASED	ALL	KK			
2	[illegible]	ADDED ITEM S 34-44	C 7	KK			
3	[illegible]	ADDED VIEW E & SECTION L-L 1-27-89		KK			
4	[illegible]	ADDED ITEM 57 4-3-89	D-3	KK			
5	[illegible]	ADDED ITEM 62 6-29-89		KK			
6	7013	ADDED VIEW D + ITEM 63 1-17-90	K6	KK			
7		NO CHG.					
8	5161	ADDED IT# 6,9 NOTE #4 9/20/90	B 7				
9	5191.1	ADDED SEAL SPLICE NOTE	B-5	KED			
10	5390.1	PICTORIAL CHANGE (SEAT)	C-6	KED			
11	5534/15	ADDED SECTION E-E AND ITS 70-72	D-3	SPB			
12	5915.1	DEL. ITS 13-16, 20 & 21 3-23-92 & NOTE 4.		SPB			
13	5953.1	DEL. ITS. 34,36 & 37. PICTORIAL CHANGE TO ITEM 25		SPB			
14	[illegible]	ADDED CAB INSULATION IT. 78 AND BACK-UP ALARM IT. 79-82, 75 & 28 INCLUDING NOTE # 5.	B-6 H-1 A-3	HH			
15	[illegible]	DELETED GLASS INSTL. FROM ASSY ADDED DOOR HOLDER TO DOOR.	ALL G3,D4	HH G3-13-93			
16	6240-26	REMOVED DOOR HOLDER IT 26, MOVED TO CAB INSTL. B6242XAA, ADDED PULL HANDLE IT. 89-91	G3,D4 G3,D4	HH 6-28-93			
17	6311.1	ADDED 5/16 DIA. HOLE 7-19-93	H-3	HH			
18	6937-3	PICTORIAL CHANGE IT. 57	E-3				

SECTION A-2

NOTES:

1. APPLY MOLYCOAT (L421663) TO RUBBING SURFACE'S
2. APPLY LOCTITE (0-30400000-0-07) TO THREAD'S
3. EYE BOLTS ARE TO BE LOCATED IN LINE WITH HORN CABLE. 1 ON EACH SIDE AND 1 IN CENTER OF ROOF SUPPORT.
4. ~~CENTER IT#13, DOOR, OVER OPENING AND USE ITEMS #14, 15 & 16 AS TEMPLATE TO DRILL 21/64 DIA HOLE (6).~~
5. USE BACK-UP ALARM AS TEMPLATE, DRILL 2 I-DIA. (.272) HOLES.

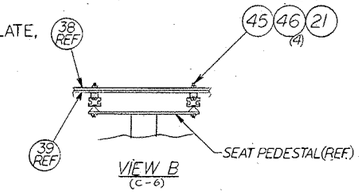

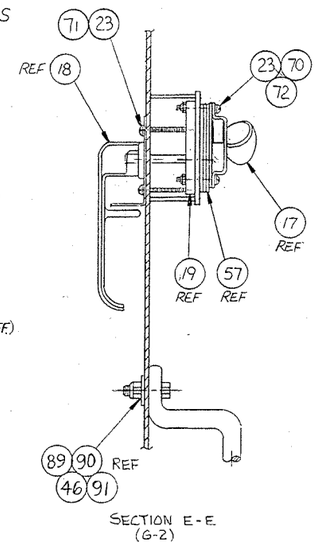

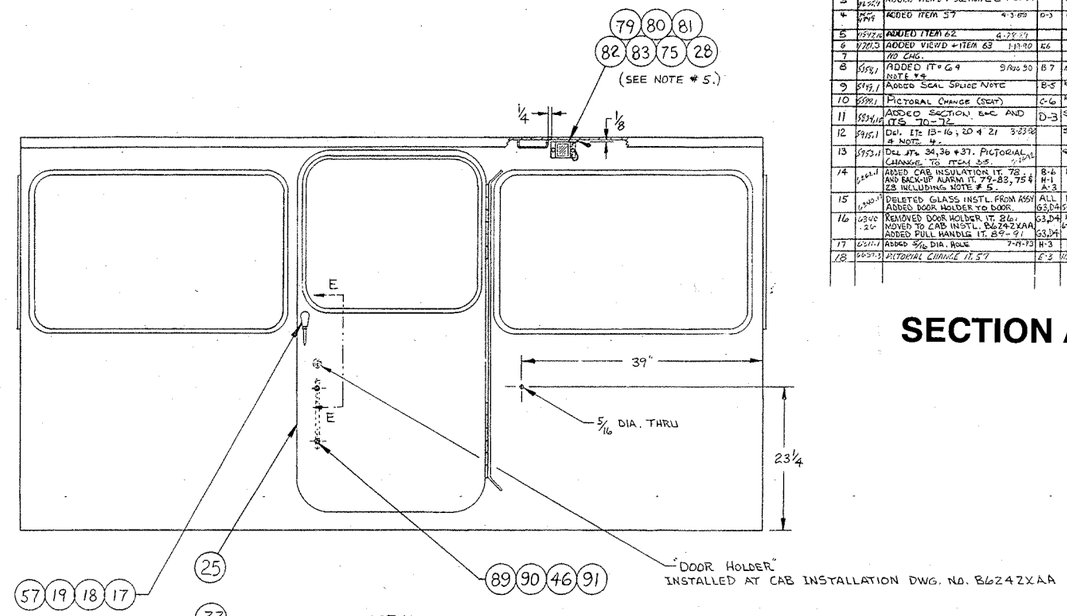

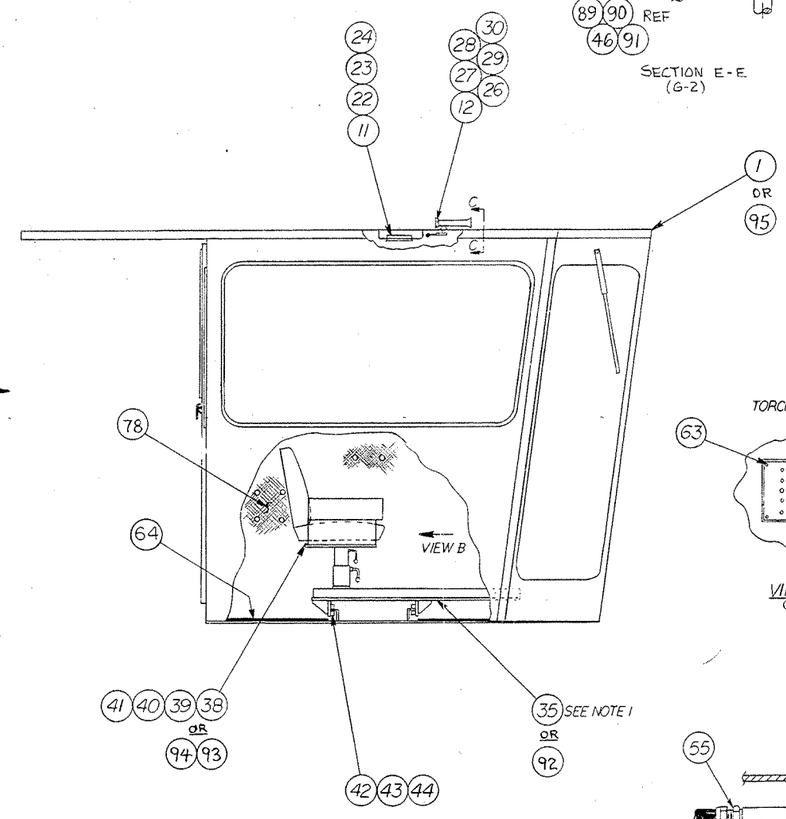

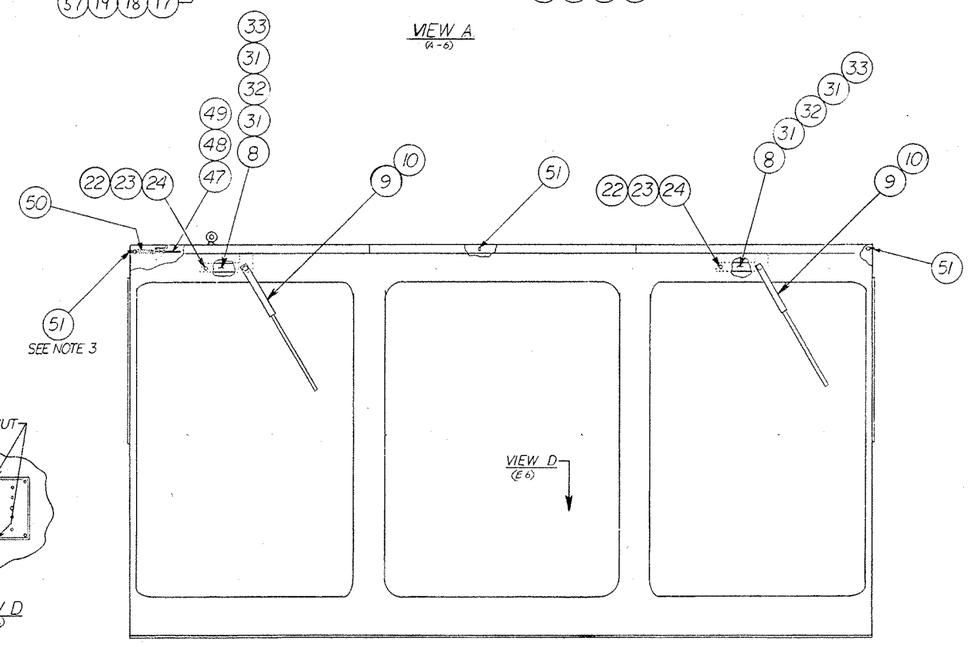

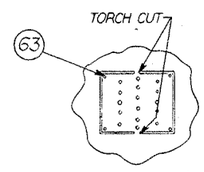

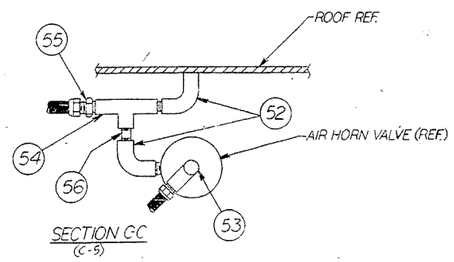

SCANNED

REVISION ____ OF THIS DRAWING HAS BEEN SCANNED INTO THE TAMPER CAN DATA BASE.

INITIALS ____ DATE ____

SEE SEPARATE PARTS LIST

FIG NO.	ITEM NO.	PART NUMBER	DESCRIPTION AND MATERIAL SIZE (REF ONLY)	QTY

IMPLIED TOLERANCES

ALL DIMENSIONS ARE IN INCHES - TOLERANCE UNLESS OTHERWISE SPECIFIED

NOMINAL SIZE RANGE		PLUS OR MINUS			NOMINAL SIZE RANGE		PLUS OR MINUS		
OVER	TO	FRACTION	2 PLACE DECIMAL	3 PLACE DECIMAL	OVER	TO	FRACTION	2 PLACE DECIMAL	3 PLACE DECIMAL
—	1	1/64	.01	.003	6	24	3/64	.03	.005
1	6	1/32	.02	.005	24	—	1/16	.05	.010

AMERICAN DIMENSIONS PLUS OR MINUS 1 DEG-2'

ALL MACHINED SURFACES TO HAVE A SURFACE FINISH OF 125 MICRO-INCHES UNLESS OTHERWISE SPECIFIED.

WEIGHT: LB.

3rd ANGLE PROJECTION

DO NOT SCALE

LAST ITEM NO. USED

DESCRIPTION CAB ASSEMBLY

DRAWN 11/11/88

CHECKED

MACHINE TYPE TR 10

SPECIFIED

APPROVED

DATE

Tamper

TAMPER CORP.

ENG. DWG. NO. B6004V

SHEET 1 CONT. 2

THIS DOCUMENT CONTAINS PROPRIETARY INFORMATION AND SUCH INFORMATION MAY NOT BE DISCLOSED TO OTHERS FOR ANY PURPOSE OR USED FOR MANUFACTURING PURPOSES WITHOUT

American Blueprint of Columbus

ENG DWG NO. B6004V

REVISIONS						
NO	ER	DESCRIPTION	ZONE	DR	CK	A
13	5953-1	RELEASE		SPB		
14	6262-1	ADDED CABLE SEAL IT. 84, 85 & 27.	E-4		DGV	HAWK
18		NO CHANGE				

SECTION A-2

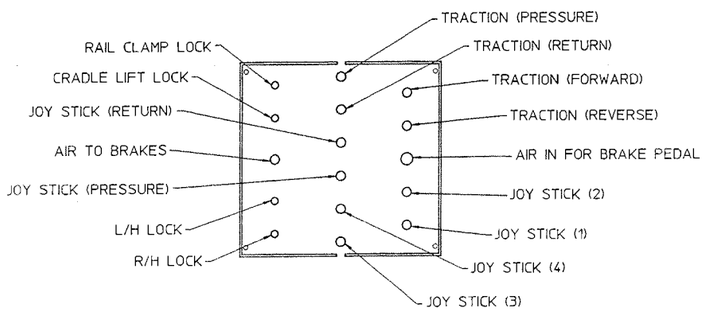

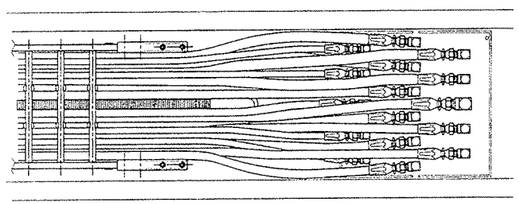

DETAIL 'F'

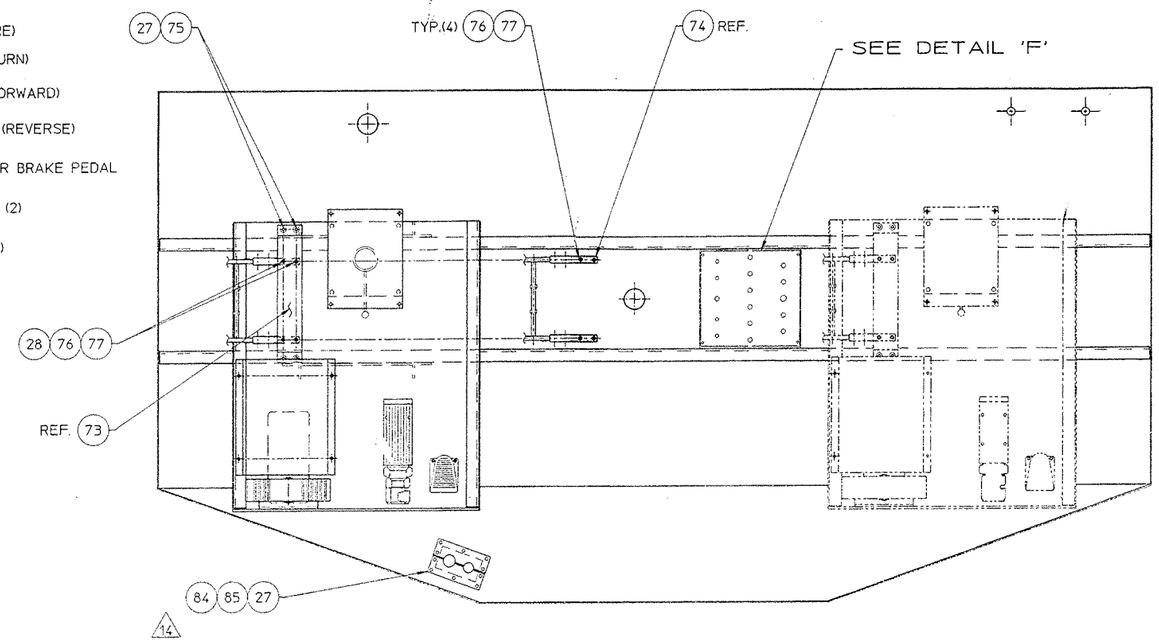

SECTION G-G

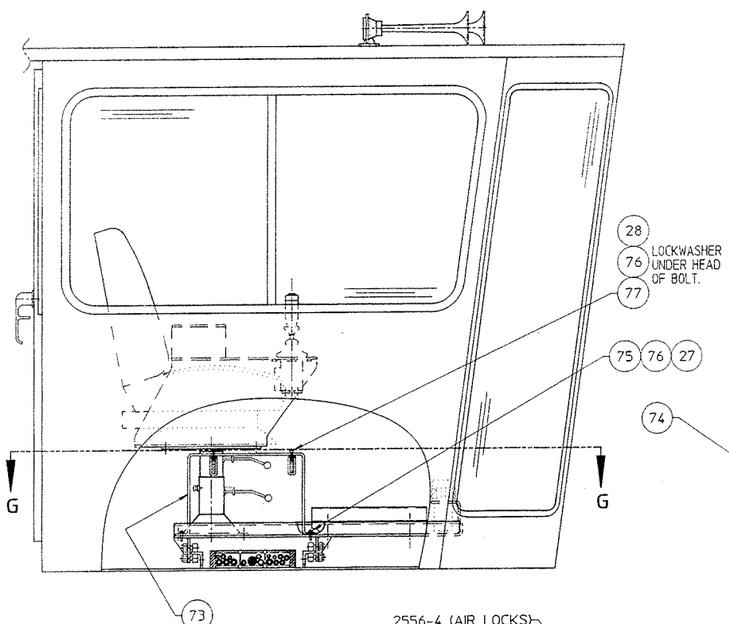

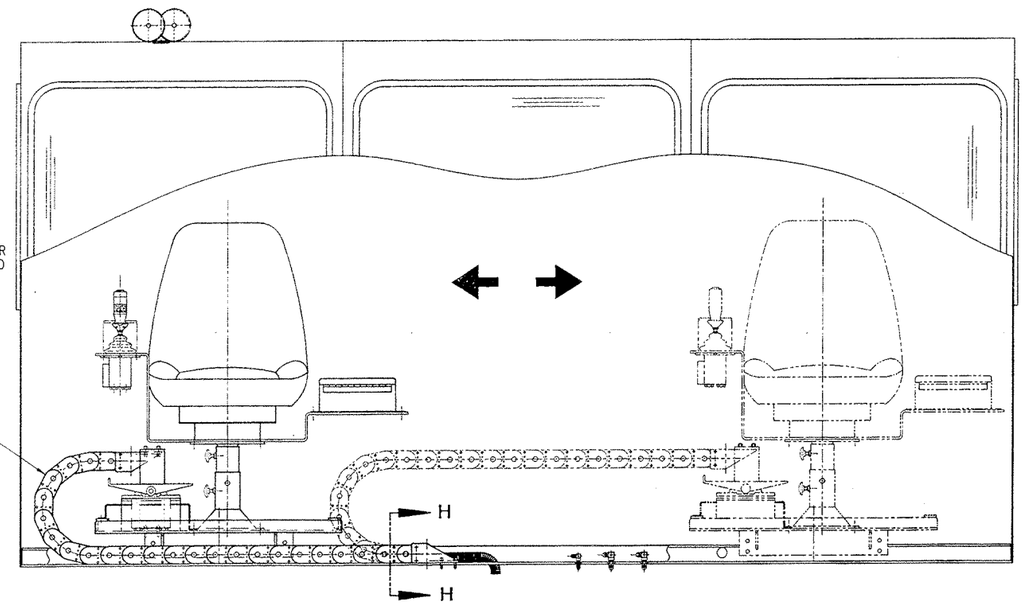

SECTION H-H

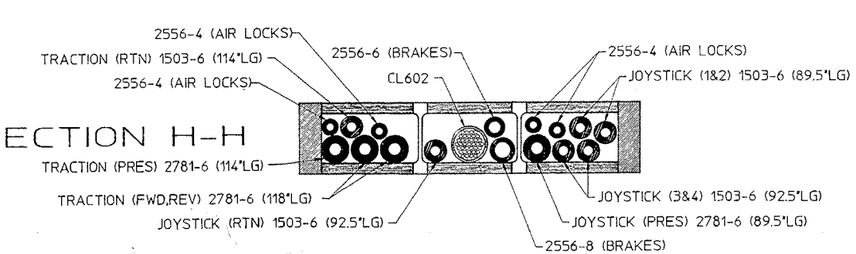

THIS DOCUMENT CONTAINS PROPRIETARY INFORMATION AND SUCH INFORMATION MAY NOT BE DISCLOSED TO OTHERS FOR ANY PURPOSE OR USED FOR MANUFACTURING PURPOSES WITHOUT THE WRITTEN PERMISSION OF FAIRMONT TAMPER.

SCANNED

REVISION ___ OF THIS DRAWING HAS BEEN SCANNED INTO THE CADDICAN DATA BASE

INITIALS DL DATE 3/8/05

SEE SEPERATE PARTS LIST

FIG NO.	ITEM NO.	PART NUMBER	DESCRIPTION AND MATERIAL SIZE (REF.ONLY)	QTY

IMPLIED TOLERANCES
ALL DIMENSIONS ARE IN INCHES-TOLERANCE UNLESS OTHERWISE SPECIFIED

NOMINAL SIZE RANGE		PLUS OR MINUS			NOMINAL SIZE RANGE		PLUS OR MINUS		
OVER	TO	FRACTION	2 PLACE DECIMAL	3 PLACE DECIMAL	OVER	TO	FRACTION	2 PLACE DECIMAL	3 PLACE DECIMAL
-	1	1/64	.01	.003	6	24	3/64	.03	.008
1	6	1/32	.02	.005	24	-	1/16	.05	.010

ANGULAR DIMENSIONS PLUS OR MINUS 1 DEGREE

ALL MACHINED SURFACES TO HAVE A SURFACE FINISH OF 125 MICROINCHES UNLESS OTHERWISE SPECIFIED.

WELDING SPECIFICATION

UNLESS OTHERWISE SPECIFIED ALL WELDS SHOULD ADHERE TO FAIRMONT TAMPER WELDING SPECIFICATION NO. 101

WEIGHT

THIRD ANGLE PROJECTION

DO NOT SCALE

LAST ITEM NO. USED

SHEET 2 CONT. 36 36

DESCRIPTION CAB ASSEMBLY

DRAWN SPB DATE 5-8-92

CHECKED DATE

APPROVED HAWKINS DATE 5-26-92

APPROVED DATE

MACHINE TYPE TR-10

Fairmont Tamper
3434 Edward Avenue-Box 30
Cross-Plant Columbia
South Carolina 29170-0035
(803) 822-2960

DRAWING NO. B6004V

PARTS LIST

ITEM NO	PART NUMBER	DESCRIPTION	QUANTITY
1	C2871WAB	ENGINE CONROL PANEL WELDT	1
2	C2882W01	ENGINE CONROL PANEL NAMEPLATE	1
3	C2980Y01	C/B NAMEPLATE	1
4	C9678Y08	5 AMP DIN RAIL C.B	2
5	C9678Y09	10 AMP DIN RAIL C.B	2
6	BLANK		
7	A0654Y03	AMMETER	1
8	BLANK		
9	A0154Y08	AIR GAUGE	1
10	A8027Y01	HOLE PLUG, 2 1/2 DIA	4
11	0-3274001-0-03	HOLE PLUG	1
12	A0651Y02	KEY SWITCH	1
13	A0655Y01	PUSH BUTTON, MOM	1
14	A0655Y03	PUSH BUTTON, MAINT, LIGHTED	6
15	A2186Y02	SLECTOR SW, 3 POSIT, MAINT	1
16	A0653Y01	CONTACT BLOCK NO-NO	10
17	A0653Y02	CONTACT BLOCK NC-NC	1
18	A0653Y03	CONTACT BLOCK NO-NC	1
19	0-3101019-0-09	LAMP (FOR SWITCHES)	6
20	BLANK		
21	BLANK		
22	BLANK		
23	0-3105021-0-03	30 AMP CIRC BREAKER	1
24	0-3105021-0-01	50 AMP CIRC BREAKER	1
25	0-3190006-0-02	SHUNT	1
26	B0971T04	RELAY TRACK	1
27	B0970Y05	END CLAMP	5
28	A6444Y01	RELAY, AROMAT	6
29	A6444Y02	RELAY MOUNT	6
30	0-3122011-0-01	RELAY, POWER, 24V	1
31	0-3121010-0-02	TIME DELAY RELAY	2
32	0-3243000-0-01	RELAY SOCKET, 8 PIN	2
~~33~~	~~0-3240003-0-02~~	~~RELAY HOLD DOWN SPRING~~	~~1~~

ASSEMBLY IDENTIFIER

TR10, 24VDC (NS SUPPLIED JD)

ASSEMBLY DESCRIPTION

ER	
DR	
CK	
APP	
MF	

REVISIONS

NO	ER	DESCRIPTION	DR	CK	APP	MF
A	13080.4	NEW RELEASE	HH			
B	13080.13	ITEM 2 WAS C2882W02. 10-6-04	HH	DEB	APD	
C	13080.14	ADDED ITEM 11. 10-14-04	HH	DEB	APD	
D	13080.22	ADDED ITEM 12, ITEMS 14 & 19 QTY WERE 7 & 7. 11-29-04	HH	DEB	APD	
E	13080.28	DEL. IT.33, IT.27 QTY WAS 4, IT.28, 29 QTY WAS 7, ADDED IT.4, 5, IT.11 WAS H6885Y01	JFB	MBS	MBS	

SHEET 1 CONT ON 2

LAST ECR 13080.28

CHECKED dvan

DATE 5-Jan-05

DWG NO C2895WAE

DWG NO C2895WAE

SHEET 1 CONT ON 2

DESCRIPTION (24) ENG. CONTROL PANEL ASSY.

DRAWN HH DATE 8-19-04

CHECKED DEB DATE 8-19-04

APP APD DATE 8-19-04

APP DATE

Fairmont Tamper™
2401 Edmund Road-Box 20
Cayce-West Columbia,
South Carolina 29171-0020
(803) 822-9160

PARTS LIST

ITEM NO	PART NUMBER	DESCRIPTION	QUANTITY
34	C3038X01	MOUNT, TIMERS	1
35	BLANK		
36	BLANK		
37	0-3274003-0-04	HOLE PLUG	8
38	A0050039	#8-32 x 1/2 RD HD SCR	2
39	A0055005	#8-32 HEX NUT	2
40	A1920Y03	FILM INSERT, WORK LIGHT	1
41	BLANK		
42	BLANK		
43	A1920Y06	FILM INSERT, HEAD LIGHT	2
44	A1920Y07	FILM INSERT, WIPER	2
45	A1920Y14	FILM INSERT, OIL WARM-UP	1
46	L421065	3/16 POP RIVET	4
47	L423619	1/8 PIPE COUPLING	1
48	A5443Y04	1/8MP-1/4 COMP TUBE 90°	2
49	A5524Y02	TUBING, PLASTIC (FT)	2
50	0-3304195-0-01	1/8FP - 1/4JIC BULKHEAD STR	1
51	BLANK		
52	A1230Y33	STRAIN RELIEF, STR	1
53	A9297Y03	#16 AWG WIRE FT.	60
54	A9297Y04	#14 AWG WIRE FT.	10
55	A9297Y06	#10 AWG WIRE FT.	10
56	0-3250001-0-02	TERMINAL LUG, PUSH-ON, SMALL	27
57	L422501	TERM EYE, #16AWG	21
58	L422496	TERM EYE, #14AWG	4
59	0-3230012-0-01	MARR CONN.	4
60	A0071070	#2 x 3/16 DRIVE SCR	4
61	A0050023	#6-32 x 5/16 RD HD SCR	4
62	A0061004	#6 LOCKWASHER	6
63	A0050071	#10-32 x 1" RD HD SCR	2
64	A0060006	#10 SAE FLAT WASHER	10
65	A0055007	#10-32 HEX NUT	18
66	B5532Y05	#10-32 x 5/8 SCR W/ CATIVE WASHER	10

ASSEMBLY IDENTIFIER

TR10 24VDC (NS SUPPLIED JD)

ASSEMBLY DESCRIPTION

ER
DR
CK
APP
MF

REVISIONS

NO	ER	DESCRIPTION	DR	CK	APP	MF
A	13080.4	NEW RELEASE	HH			
C	13080.14	ITEM 62 QTY WAS 8. 10-14-04	HH	DEB	APD	
E	13080.28	IT.62 QTY WAS 12	JFB	MBS	MBS	

SHEET 2 CONT ON 3
LAST ECR 13080.28
CHECKED dvan
DATE 5-Jan-05
DWG NO C2895WAE

DWG NO C2895WAE
SHEET 2
CONT ON 3
DESCRIPTION (24) ENG. CONTROL PANEL ASSY.
DRAWN HH
DATE 8-19-04
CHECKED DEB
DATE 8-19-04
APP APD
DATE 8-19-04
APP
DATE

Fairmont Tamper™
2401 Edmund Road-Box 20
Cayce-West Columbia,
South Carolina 29171-0020
(803) 822-9160

PARTS LIST

ITEM NO	PART NUMBER	DESCRIPTION	QUANTITY
1	BLANK		
~~2~~	~~L420676~~	~~BATTERY SWITCH~~	~~1~~
~~3~~	~~0-3120002-0-01~~	~~STARTER SOLENOID (24V)~~	~~1~~
4	H5138Y01	LOCKOUT LEVER KIT, BATT.	1
5	A4992Y23	PIN, 1/4" BALL LOCK	2
6	A4992Y24	LANYARD, 6"-LG.	2
7	C3244Y01	TIEDOWN ANGLE	1
8	BLANK		
9	4012283	ELECTRICAL SCHEMATIC, MACHINE	1
10	BLANK		
11	BLANK		
12	4012342	JUNCTION BOX WIRING DIAG	1
13	A7519YAA	CL510 (BATTERY-GROUND)	1
14	A7520YAA	CL511 (BATTERY JUMPER)	1
15	A7521YAA	CL512 (BATTERY-BAT. SW)	1
16	A7523YAA	CL514 (AIR DRYER)	1
17	A7524YAA	CL515 (BAT. SW-STARTER)	1
18	BLANK		
19	B3027X03	MATTING, BATTERY BOX	1
20	0-2403434-0-02	CABLE ASSY (GRD. STRAP)	1
21	A0036063	3/8-16 x 1" HEX HD SCR	2
22	L40818	STRAIN RELIEF	2
23	L40835	MARR CONNECTOR	6
24	A0071063	3/8-16 x 3/4 WELD STUD	3
25	A0059003	3/8 FLAT WASHER	3
26	L40387	3/8-16 LOCK NUT	3
27	A0071057	3/8-16 WING NUT	4
28	D6443Y01	BATTERY TERM. PROTECTOR	2
29	D6443Y02	BATTERY TERM. PROTECTOR	2
30	D6443Y03	TERMINAL INSULATOR CAP	3
31	D6443Y04	TERMINAL INSULATOR CAP	3
~~32~~	~~A0050078~~	~~1/4-20 x 3/4 RD HD MACH SCR~~	~~2~~
33	A0059001	1/4 FLAT WASHER	68

ASSEMBLY IDENTIFIER

TR10 24VDC (NS SUPPLIED JD)

ASSEMBLY DESCRIPTION

ER	
DR	
CK	
APP	
MF	

REVISIONS

NO	ER	DESCRIPTION	DR	CK	APP	MF
A	13080.4	NEW RELEASE	HH			
B	13080.13	DELETED ITEM 2. 10-6-04	HH	DEB	APD	
C	13117.2	ADDED IT. 4, 5 & 6. DELETED IT. 32. 2-7-05	HH	DEB	APD	
D	13144.4	DELETED IT-3, ADDED IT-28 THRU 31. 8-15-05	HH	DES	APD	

DWG NO C2982WAE

SHEET 1 CONT ON 2

DESCRIPTION (24) GENERAL ELECTRICAL ASSY.

DRAWN HH DATE 8-19-04

CHECKED DEB DATE 8-19-04

APP APD DATE 8-19-04

APP DATE

SHEET 1 CONT ON 2 LAST ECR 13144.4 CHECKED dvan DATE 18-Aug-05

DWG NO C2982WAE

Fairmont Tamper™
2401 Edmund Road-Box 20
Cayce-West Columbia,
South Carolina 29171-0020
(803) 822-9160

PARTS LIST

ITEM NO	PART NUMBER	DESCRIPTION	QUANTITY
34	L40237	1/4-20 LOCK NUT	68
35	A0050079	1/4-20 x 1" RD HD MACH SCR	4
36	BLANK		
37	L422321	HOSE CLAMP	24
38	L422322	HOSE CLAMP	16
39	A0071062	1/4-20 x 3/4 WELD STUD	60
40	L420492	6" TIE WRAP	50
41	L420491	3 1/2" TIE WRAP	25
42	L425405	1/2 PIPE COUPLING CLOSE	2
43	L40830	1/2 LOCK RING	4
44	0-3221005-0-00	CONDULET	2
45	A0050055	#10-24 x5/8 RD HD MACH SCR	6
46	A0061006	#10 LOCKWASHER	6
47	A0055006	#10-24 HEX NUT	6
48	D6454XAA	SWITCH BOX KIT	1
49	200640	ENCLOSURE	2
50	189832	DECAL	2
51	F020177	HOLE SEAL	2
52	F040111	CONTACT BLOCK	2
53	F040119	OPERATOR	2
54	F040178	PUSH BUTTON	2
55	133115	VENT PLUG	2
56	0-3230020-0-01	VALVE CONNECTOR	1
57	4012284	CABLE DIAGRAM	1
58	C2895WAE	ENG CONTROL PANEL ASSY	1
59	4012388	SW. HD BOX WIRING DIA	1
60	BLANK		
61	C2969WAB	CONTROL BOX, SWIVEL HD.	1
62	C2884V03	ENGINE CONTROL PANEL WIRING DIAG	1
63	176444	CABLE, 16/2 SUPER-TREX (FT)	50
64	BLANK		
65	BLANK		
66	BLANK		

ASSEMBLY IDENTIFIER

TR10 24VDC (NS SUPPLIED JD)

ASSEMBLY DESCRIPTION

ER
DR
CK
APP
MF

REVISIONS

NO	ER	DESCRIPTION	DR	CK	APP	MF
A	13080.4	NEW RELEASE	HH			
B	13080.13	ADDED ITEMS 48 THRU 55 AND 63. 10-6-04	HH	DEB	APD	
D		NO CHANGE				

SHEET 2 CONT ON - LAST ECR 13144.4 CHECKED dVan DATE 18-AUG-05 DWG NO C298[illegible]AE

DWG NO C2982WAE
SHEET 2 CONT ON -
DESCRIPTION (24) GENERAL ELECTRICAL ASSY.
DRAWN HH DATE 8-19-04
CHECKED DEB DATE 8-19-04
APP APD DATE 8-19-04
APP DATE

Fairmont Tamper™
2401 Edmund Road-Box 20
Cayce-West Columbia,
South Carolina 29171-0020
(803) 822-9160

ENG.DWG.NO. C2895WAE

NO	ER	DESCRIPTION	DR	CK	APP	MF
A	13080.4	NEW RELEASE	HH			
C	13080.14	ADDED ITEM 11 AND HARDWARE.	HH	DEB	APD	
D	13080.22	REMOVED ITEMS 14, 16, 19 & 106. ADDED ITEMS 12 & 16. NEW WIRE PER C2884V04 DIAGRAM.	HH	DEB	APD	
E	13080.28	DEL. IT.33,70,93,94 & (2) IT.62,70,74 & (1) IT.26,29 & (4) IT.62,74. ADDED IT.4, 5. REMOVED NOTE FROM IT.11 FOR DRILLING		JFB	MBS	MBS

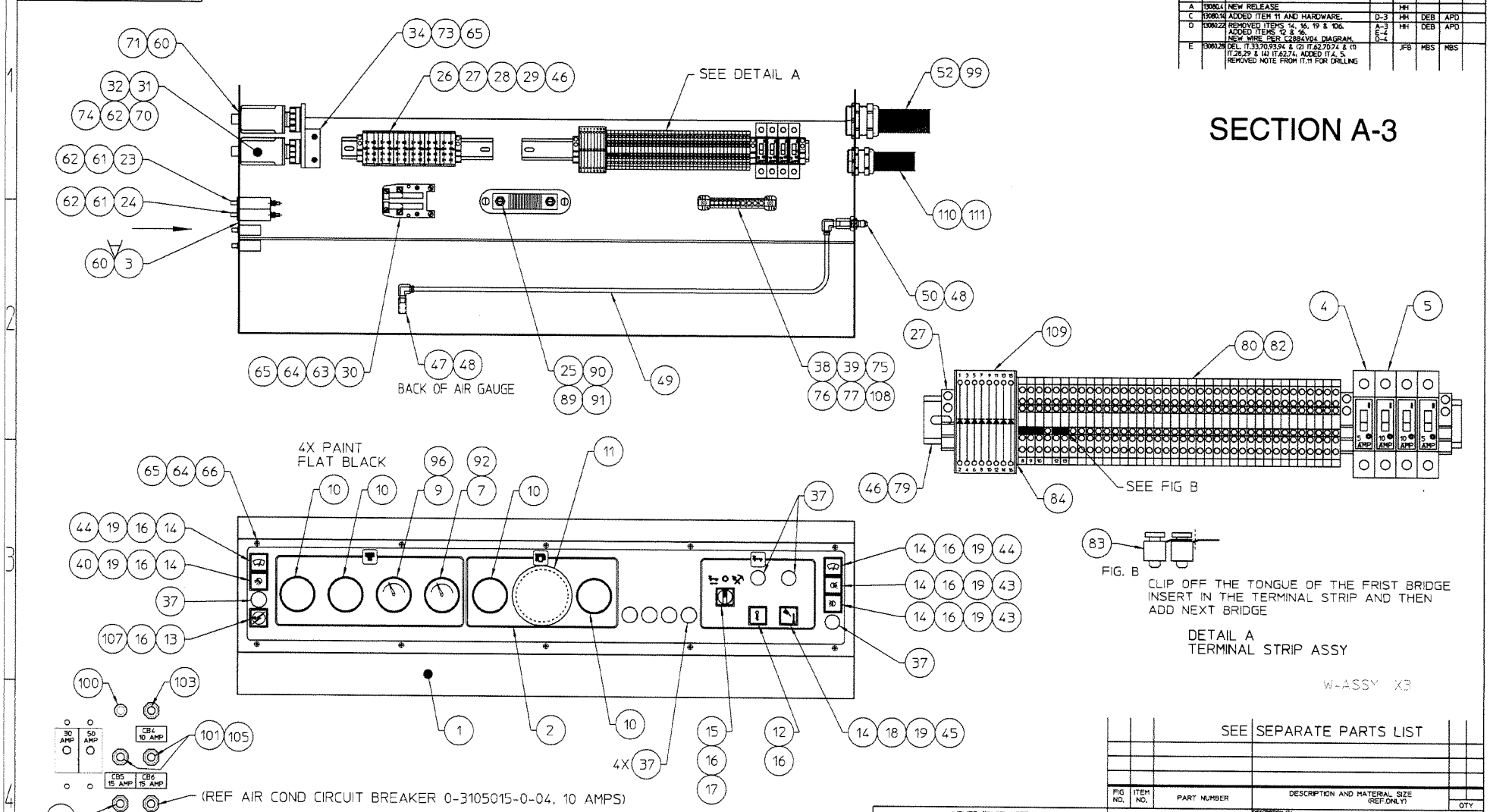

FIG NO.	ITEM NO.	PART NUMBER	DESCRIPTION AND MATERIAL SIZE (REF.ONLY)	QTY
		SEE	SEPARATE PARTS LIST	

IMPLIED TOLERANCES
ALL DIMENSIONS ARE IN INCHES-TOLERANCE UNLESS OTHERWISE SPECIFIED

NOMINAL SIZE RANGE OVER	TO	PLUS OR MINUS FRACTION	2 PLACE DECIMAL	3 PLACE DECIMAL	NOMINAL SIZE RANGE OVER	TO	PLUS OR MINUS FRACTION	2 PLACE DECIMAL	3 PLACE DECIMAL
-	1	1/64	.01	.003	6	24	3/64	.03	.005
1	6	1/32	.02	.005	24	-	1/16	.05	.010

ANGULAR DIMENSIONS PLUS OR MINUS 1 DEGREE
ALL MACHINED SURFACES TO HAVE A SURFACE FINISH OF 125 MICROINCHES UNLESS OTHERWISE SPECIFIED.

WELDING SPECIFICATION
UNLESS OTHERWISE SPECIFIED ALL WELDS SHOULD ADHERE TO FAIRMONT TAMPER WELDING SPECIFICATION NO. 101

WEIGHT LBS.
THIRD ANGLE PROJECTION
DO NOT SCALE
SHEET 1 CONT. – OF –

DESCRIPTION (2)
ENG. CONTROL PANEL ASSY.

DRAWN HH	DATE 8-19-04	MACHINE TYPE TR10 (NS SUPPLIED JD)
CHECKED DEB	DATE 8-19-04	
APP-ENG APD	DATE 8-19-04	Fairmont Tamper 3401 Bowers Road-Box 20 Lynch-West Columbia, South Carolina 29171-0020 (803) 822-1960
APP-MFG	DATE	
LAST ECN 13080 .28	CHECKED dyan DATE 5-Jan-05	ENGINEER C2895WAE

THIS DOCUMENT CONTAINS PROPRIETARY INFORMATION AND SUCH INFORMATION MAY NOT BE DISCLOSED TO OTHERS FOR ANY PURPOSE OR USED FOR MANUFACTURING PURPOSES WITHOUT THE WRITTEN PERMISSION OF FAIRMONT TAMPER.

ENG.DWG.NO.
C2884V04

REVISIONS						
NO	ER	DESCRIPTION	ZONE	DR	CK	APP	MF
A	130622	NEW RELEASE		HH			
B	130628	CHANGES MADE PER SCHEMATIC CHANGE		JFB	MBS	MBS	
C	10151	REMOVED WIRES # #6, 13, 14, 15 & 25 FROM TSA. ADDED WIRE #27A TO TSA (41) & CR7 (6)	TSA CR7	HH	DES	APD	12-14-05
D	10076	ADDED OPTIONS TO ARRANGEMENT	ALL	HH	DES	JBR	9-12-06

SECTION A-4

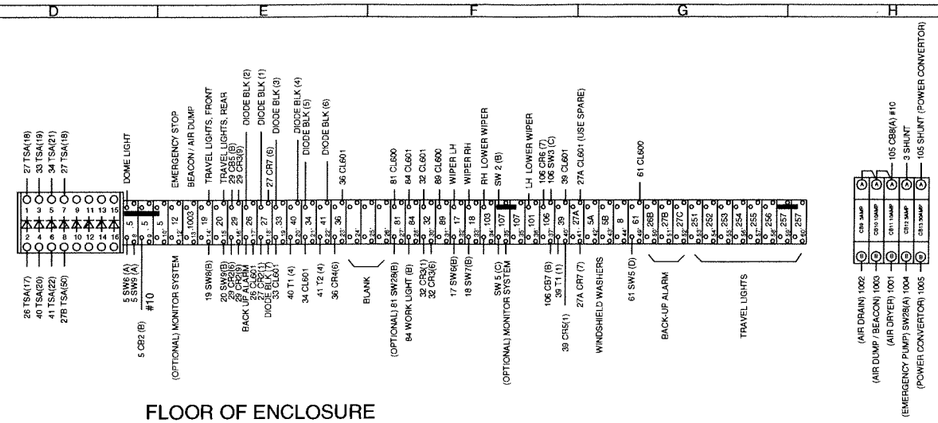

FLOOR OF ENCLOSURE

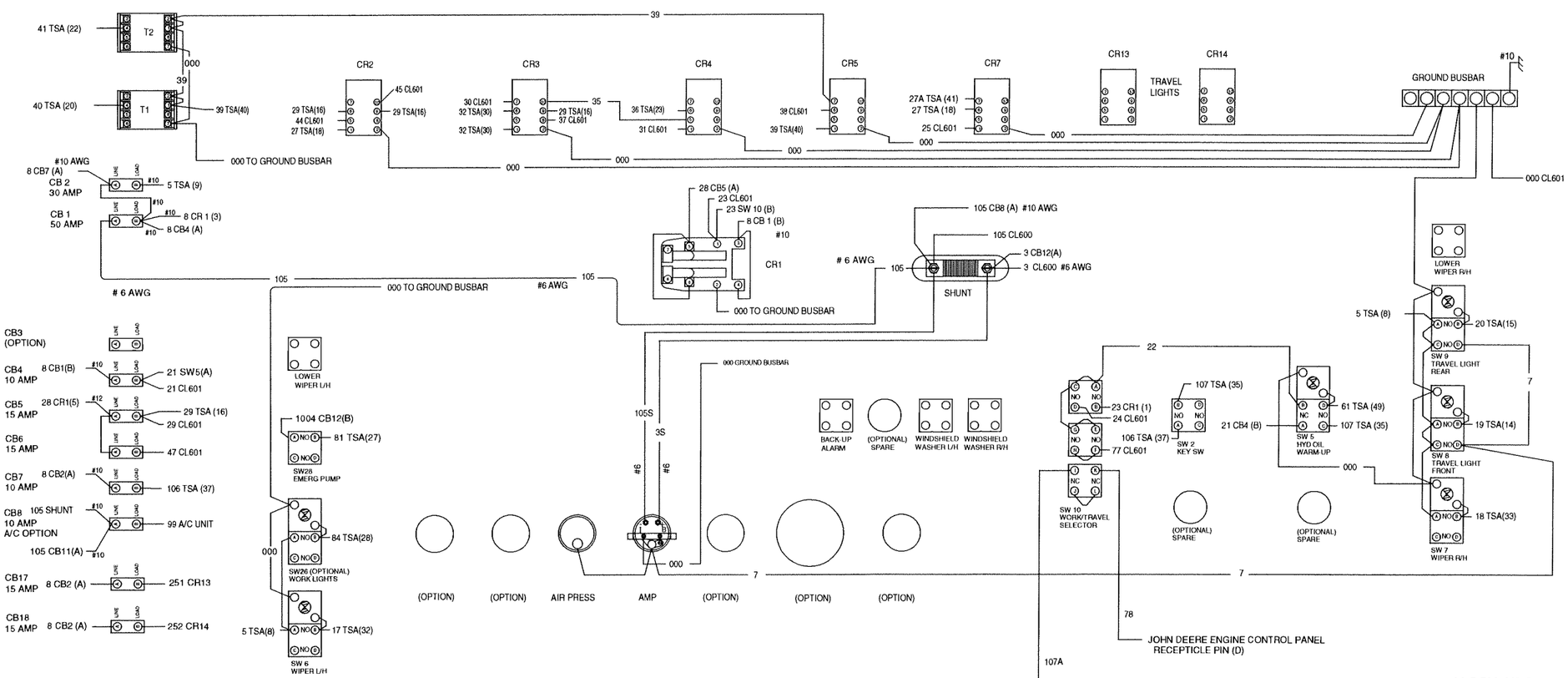

NAMEPLATE

V-SCH X2.5

WORK / TRAVEL SELECTOR						
CONTACTS	A-B	C-D	E-F	G-H	I-J	K-L
WORK	X	O	X	O	O	X
OFF (NEUTRAL)	O	O	O	O	X	X
TRAVEL	O	X	O	X	X	O

ALL WIRES TO BE #16 AWG UNLESS OTHERWISE NOTED.

THIS DOCUMENT CONTAINS PROPRIETARY INFORMATION AND SUCH INFORMATION MAY NOT BE DISCLOSED TO OTHERS FOR ANY PURPOSES OR USED FOR MANUFACTURING PURPOSES WITHOUT THE WRITTEN PERMISSION OF FAIRMONT TAMPER.

FOR REFERENCE ONLY

DESCRIPTION: ENG CONTROL PANEL WIRING

DRAWN: HH	DATE: 11-29-04	MODEL TYPE: TR10 (JD / NS)
DESIGN: DEB	DATE: 11-29-04	Fairmont Tamper
APPROV: APD	DATE: 11-29-04	
SHEET: 1	SCALE: -	
DRAWING: 10015 1	CHECKED: Dwain	ENGINEERING: C2884V04
	DATE: 11-Jan-06	

FOOT CONTROL ASSY

SECTION A-5 DWG.NO. B6098WAB

ITEM	DESCRIPTION	PART NUMBER	QTY
002	FLOOR SWITCH	L424085	1
003	TREADLE VALVE	B6092Y01	1
004	COVER PLATE	B6353W01	1
007	HYDRAULIC REMOTE CONTROL (SEE J-4A)	A0698Y06	1
008	CABLE PIN	0-2405369-0-01	1
009	1/4 MED PL WASHER	A0059001	6
010	1/4-20 X 1/2 HH CAPSCR	A0036001	3
011	1/4-20 X 7/8 HH CAPSCR	A0036004	6
012	ESNA NUT	L41157	6
016	5/16-18 X 1 SOCHD SCR	A0041065	4
017	ESNA NUT	L41582	8
022	JIC-MALE PIPE	L423156	1
023	1/2 NPTF PLUG	L411407	1
024	90 DEG ADAPTER	L411939	4
026	1/2 NPTF/JIC STR	L411376	1
029	1/2 NPTF / 3/8 JIC STR	L411380	1
030	5/16-18 X 1 CAPSCR	A0036034	4
031	SWIVEL WELDMENT	B6061WAB	1
032	3/8 JIC SWIVEL 90	0-3304148-0-05	2

FOOT CONTROL ASSY
DWG NO B6098WAB
SECTION A–5
REV 8

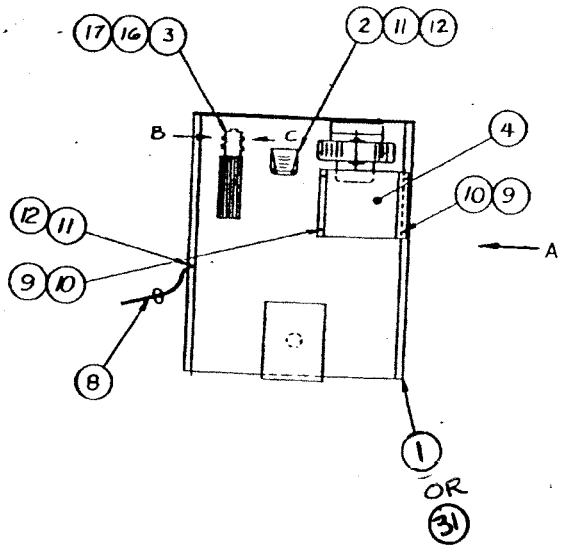

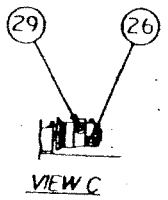

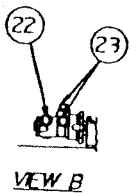

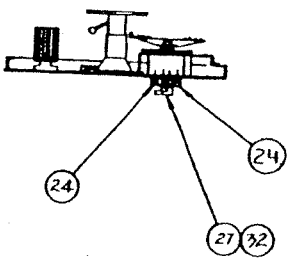

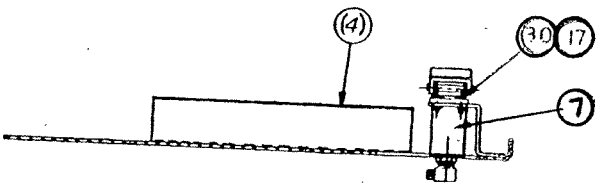

FLOOR MAT INSTL
DWG NO A4595XAB
SECTION A-6

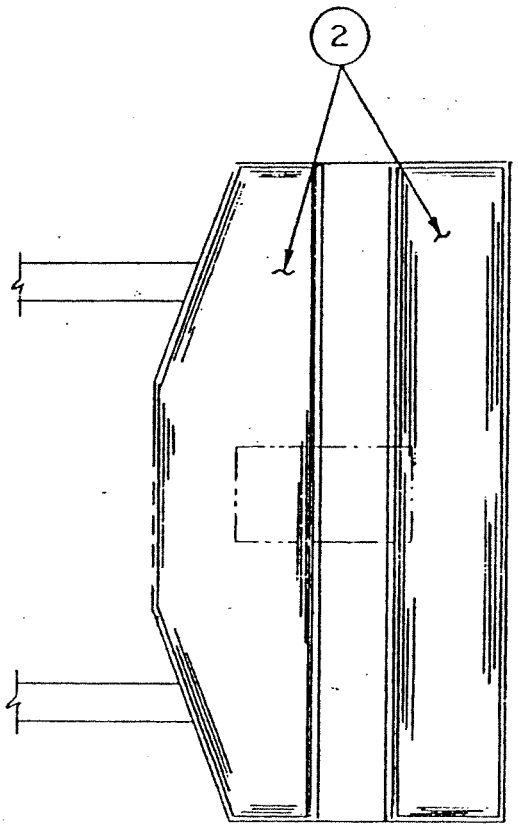

ITEM NO	PART NO	DESCRIPTION	QTY
2	L423999	RUBBER MATTING	3

BACK–UP MIRROR
DWG NO A7667XAB
SECTION A–7

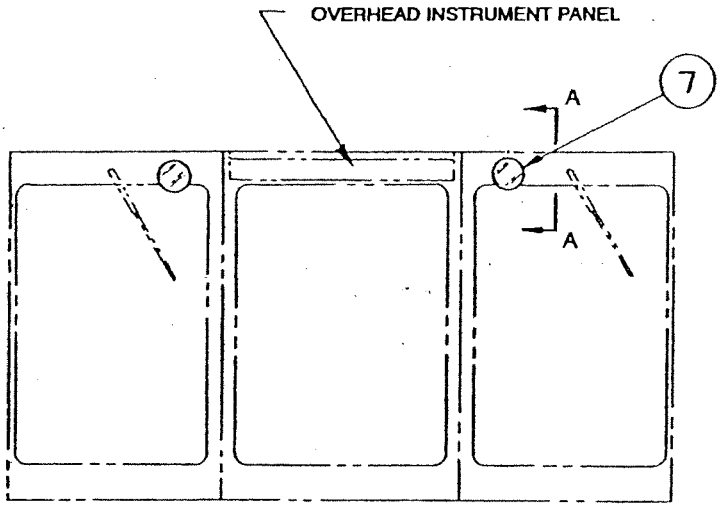

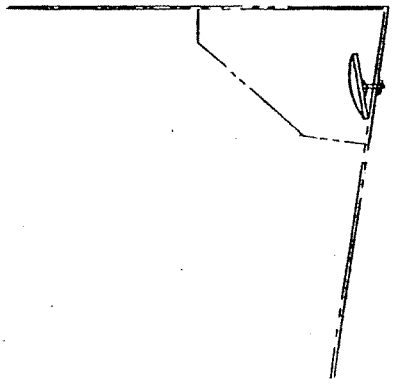

SECTION A–A

7	A5718Y06	MIRROR	2
ITEM NO	PART NO	DESCRIPTION	QTY

ENG.DWG.NO. D0512 H

REVISIONS							
NO	ER	DESCRIPTION	E	DR	CK	APP	MF
A	13117.1	NEW RELEASE		HH			
B	100378	ITEMS 2 AND 3 WERE LEXAN (CLEAR). IT-4 WAS A0222T61, IT-5 WAS A0222T64, IT-6 WAS D2051X01, IT-7 WAS D2051X02.	P/L	HH	DES	APD	

SECTION A-8A

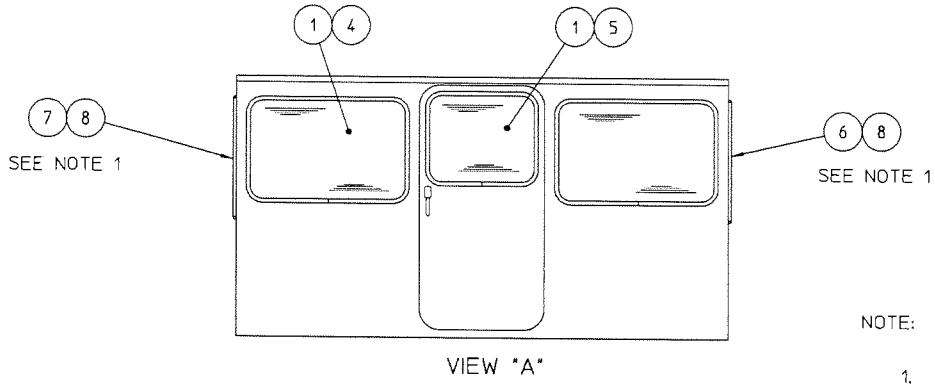

VIEW "A"

NOTE:

1. BEFORE INSTALLING SIDE WINDOWS ITEM 5 AND 9. CHECK HEIGHT OF OPENING. ENSURING THAT IT IS 25 3/8 PLUS 1/16 AND MINUS 0. A SMALLER OPENING WILL CAUSE THE SLIDING WINDOW TO BIND.

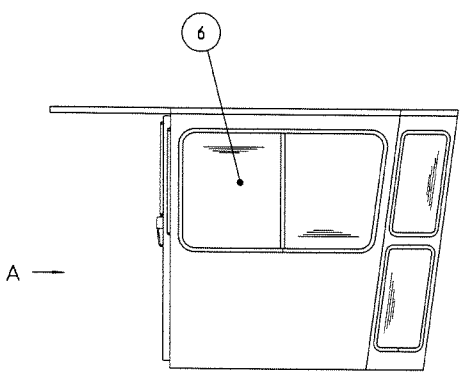

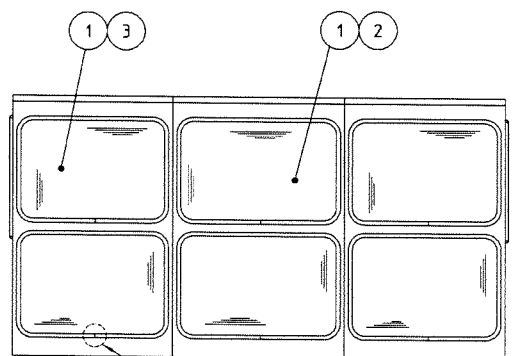

POSITION WEATHER STRIP SPLICE AT BOTTOM CENTER OF WINDOW. SEAL SPLICE WITH SEALANT INSIDE & OUT. (TYP ALL WINDOWS)

ALL WINDOWS ARE 1/4" SOLEX, LAMINATED SAFETY GLASS.

FIG NO.	ITEM NO.	PART NUMBER	DESCRIPTION AND MATERIAL SIZE (REF.ONLY)	QTY
	8	L424230	WEATHER SEAL (FT)	24
	7	D2051X06	L/H SLIDING WINDOW (SOLEX BRONZE)	1
	6	D2051X05	R/H SLIDING WINDOW (SOLEX BRONZE)	1
	5	4011268	GLASS, (DOOR) (SOLEX BRONZE)	1
	4	4011267	GLASS, (REAR) (SOLEX BRONZE)	2
	3	H6882Y01	GLASS, FRONT SIDE (SOLEX CLEAR)	4
	2	H6881Y01	GLASS, FRONT CENTER (SOLEX CLEAR)	2
	1	0-3044002-0-01	WEATHER SEAL (FT)	95

W

SCALE 1 : 15

PLOT .0666

IMPLIED TOLERANCES
ALL DIMENSIONS ARE IN INCHES-TOLERANCE UNLESS OTHERWISE SPECIFIED

NOMINAL SIZE RANGE OVER	TO	PLUS OR MINUS FRACTION	2 PLACE DECIMAL	3 PLACE DECIMAL	NOMINAL SIZE RANGE OVER	TO	PLUS OR MINUS FRACTION	2 PLACE DECIMAL	3 PLACE DECIMAL
-	1	1/64	.01	.003	6	24	3/64	.03	.006
1	6	1/32	.02	.005	24	-	1/16	.05	.010

ANGULAR DIMENSIONS PLUS OR MINUS 1 DEGREE

√ ALL MACHINED SURFACES TO HAVE A SURFACE FINISH OF 125 MICROINCHES UNLESS OTHERWISE SPECIFIED.

WELDING SPECIFICATION

UNLESS OTHERWISE SPECIFIED ALL WELDS SHOULD ADHERE TO FAIRMONT TAMPER WELDING SPECIFICATION NO. 101

WEIGHT

ISO. 3rd ANGLE PROJECTION

DO NOT SCALE

SHEET 1 CONT. – ON –

DESCRIPTION (2)4 GLASS INSTALLATION (FRA)

DRAWN HH	DATE 2-03-05	MACHINE TYPE TR10 (SOLEX, FRONT CLEAR SOLEX, R & S BRONZE)
CHECKED DEB	DATE 2-03-05	
APP-ENG APD	DATE 2-03-05	Fairmont Tamper
APP-MFG	DATE	3401 Edmund Road-Box 20 South Saint Paul, MN 55075-0020 (651) 451-1940
LAST ECN 13117 .1	CHECKED (DVD) DATE 8-Feb-05	ENGLOSURE D0512WAH

THIS DOCUMENT CONTAINS PROPRIETARY INFORMATION AND SUCH INFORMATION MAY NOT BE DISCLOSED TO OTHERS FOR ANY PURPOSE OR USED FOR MANUFACTURING PURPOSES WITHOUT THE WRITTEN PERMISSION OF FAIRMONT TAMPER.

CONTROL BOX

SECTION A-9 **DWG NO. C2969WAB**

ITEM	DESCRIPTION	PART NUMBER	QTY
1	ENCLOSURE DRILLING	C3041W01	1
3	NAMEPLATE	A7611X01	1
4	NAMEPLATE	0-1408112-0-01	1
5	SWITCH TOGGLE	L41819	4
6	TOGGLE SWITCH	L421988	1
7	TOGGLE SWITCH DPDT	L420695	4
8	WEATHERPROOF P/B SWITCH	0-3117011-0-01	2
9	JOYSTICK	L426050	1
10	PUSH PULL SWITCH	0-3117007-0-01	1
11	RED LENS	0-3110006-0-01	1
12	BLOCK CONTACT	L40804	1
13	BLOCK CONTACT	L40805	1
14	NAMEPLATE FAST/SLOW	C2968Y01	1
19	16 GA. WIRE	A9297Y03	4
20	TERMINAL LUG	L422501	44
21	TIE MINIATURE	L420491	10
22	90 DEG ELBOW CABLE CONNECTOR	L420607	2
23	CABLE CL519	A7528YAA	1
24	CABLE CL516	A7525YAA	1
27	CABLE CL602B	C9080XAB	1

CONTROL BOX
DWG NO C2969WAB
SECTION A-9
REV 2

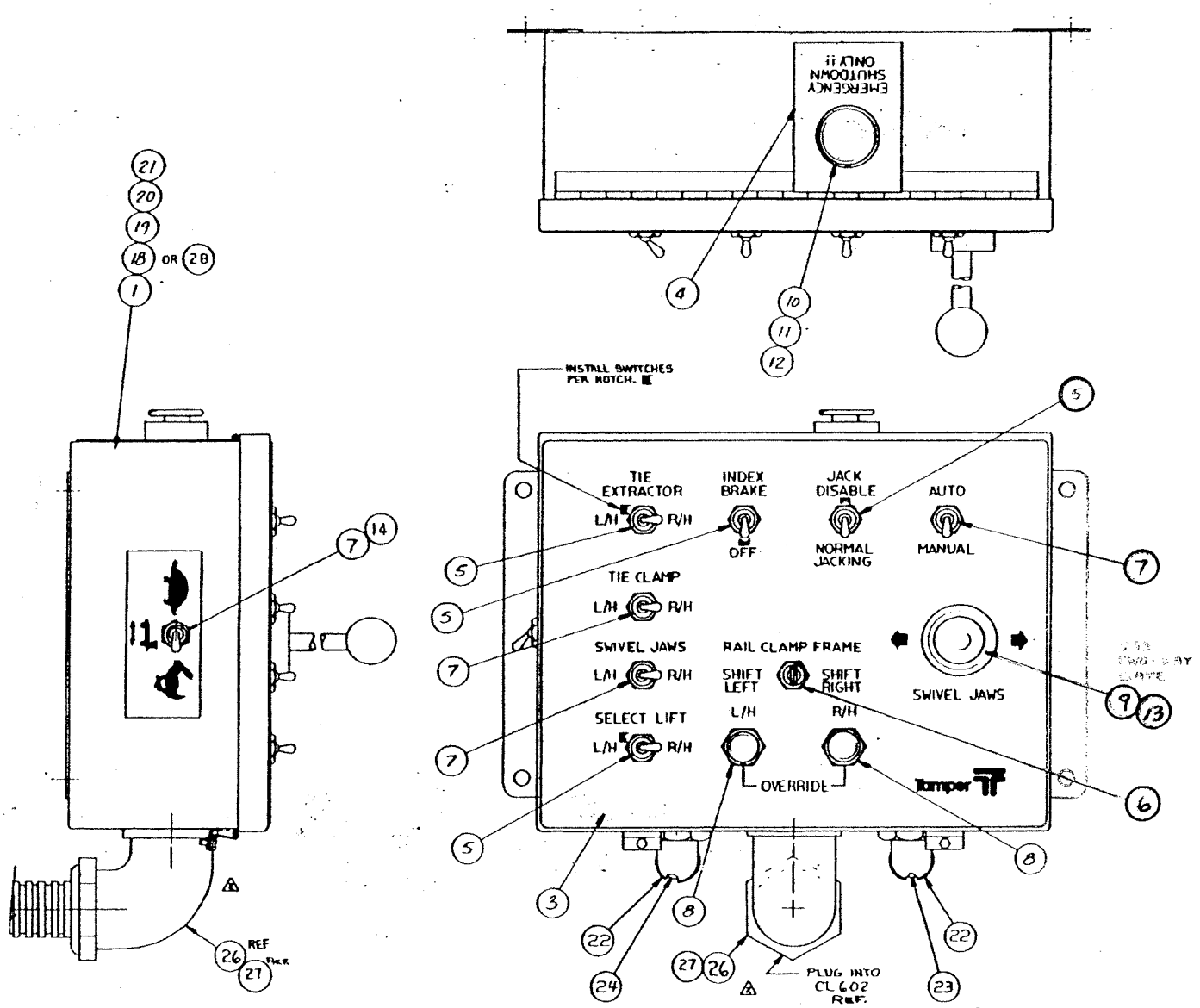

REFER TO SECTION A-10 FOR WIRING

SECTION A-10

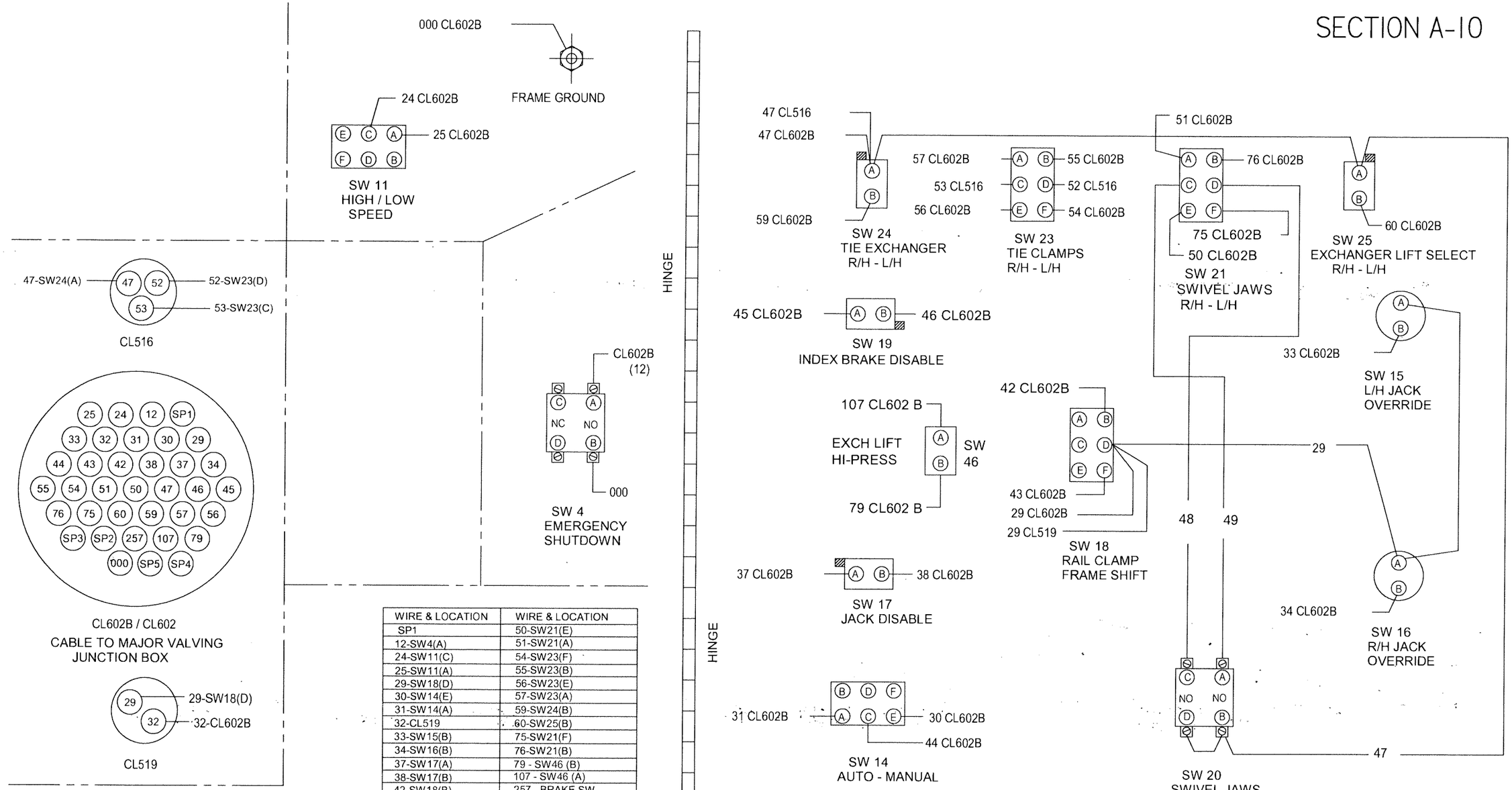

WIRE & LOCATION	WIRE & LOCATION
SP1	50-SW21(E)
12-SW4(A)	51-SW21(A)
24-SW11(C)	54-SW23(F)
25-SW11(A)	55-SW23(B)
29-SW18(D)	56-SW23(E)
30-SW14(E)	57-SW23(A)
31-SW14(A)	59-SW24(B)
32-CL519	60-SW25(B)
33-SW15(B)	75-SW21(F)
34-SW16(B)	76-SW21(B)
37-SW17(A)	79 - SW46 (B)
38-SW17(B)	107 - SW46 (A)
42-SW18(B)	257 - BRAKE SW
43-SW18(F)	SP2
44-SW14(C)	SP3
45-SW19(A)	SP4
46-SW19(B)	SP5
47-SW24(A)	000-FRAME GROUND

CABLE WIRING

NOTES:
1. ALL WIRES ARE TO BE #16 AWG UNLESS OTHERWISE NOTED
2. ALL WIRES TO BE NUMBERED AT BOTH ENDS
3. NOTCH ON SWITCH

CONFIDENTIAL
(c)COPYRIGHT 2001 HARSCO TRACK TECHNOLOGIES. THIS DRAWING OR DOCUMENT IS THE PROPERTY OF HARSCO TRACK TECHNOLOGIES AND EMBODIES CONFIDENTIAL INFORMATION, TRADE SECRET INFORMATION, AND/OR KNOW-HOW THAT IS THE PROPERTY OF HARSCO TRACK TECHNOLOGIES. BY ACCEPTING THIS DRAWING OR DOCUMENT, THE RECIPIENT AGREES (1) NOT TO PROVIDE, OR OTHERWISE MAKE AVAILABLE, THE DRAWING OR DOCUMENT, OR ANY INFORMATION OR KNOW-HOW EMBODIED THEREIN, TO ANY THIRD PARTY AND (2) NOT TO REPRODUCE OR USE THE DRAWING OR DOCUMENT TO MANUFACTURE ANY APPARATUS OR DEVICE, WITHOUT THE PRIOR WRITTEN AUTHORIZATION OF HARSCO TRACK TECHNOLOGIES.

SOLID EDGE DRAWING

IMPLIED TOLERANCES
ALL DIMENSIONS ARE IN INCHES. TOLERANCES UNLESS OTHERWISE SPECIFIED.

INCH				METRIC			
DECIMALS				DECIMALS			
DECIMAL		DIMENSIONAL TOLERANCE		DECIMAL		DIMENSIONAL TOLERANCE	
2	0	.03	.005	1	.1	.8	.13
3	24	.04	.005	.152	.025	.13	.25
4		.05	.010		.025	.13	.25

UNLESS OTHERWISE SPECIFIED ALL MACHINED SURFACES WILL HAVE
A MINIMUM OF 125 MICRO INCHES
AVG. ARITHMETIC TOLERANCE OF ± 50
GENERAL INSTRUCTION 125

THIRD ANGLE PROJECTION

UNLESS OTHERWISE SPECIFIED ALL WELDS
TO CONFORM TO THE LATEST HTT WELD
INSPECTION STD

CHANGE	R/L	REVISION	DATE
000707	A	INITIAL RELEASE	9-7-06

DESCRIPTION: SW HD BOX WIRING DIAG.
DRAWING NUMBER: ----------
MACHINE TYPE: TR10, NS
CODE:
DRAWN: hhill
DATE DRAWN: 9-7-06
DATE:
APVD. DES: DES
APVD. MFG: JBR
DO NOT DOCUMENT ONLY

HTT
Harsco Track Technologies
Harsco
Columbia, SC

PART NUMBER: 4012388
SIZE: D
SHEET: 1 of 1

Plotted by hhill on 9/14/2006 4012388.dft

SECTION AO

CAB COMPONENTS OPTIONS

PARTS LIST

ITEM NO	PART NUMBER	DESCRIPTION	QUANTITY
1	H4723X02	HYDRAULIC A/C W/HEATER	1
2	0-3334049-0-12	RELIEF VALVE	1
3	C9114Y01	TAGS & BANDS	1
4	C9114Y02	TAGS & BANDS	1
5	D3690Y79	DECAL, A/C RELIEF	1
6	D3690Y80	DECAL, A/C OPERATION	1
7	0-3105015-0-04	CIRCUIT BREAKER (10 AMP)	1
8	L424832	5/8 HEATER HOSE (FT)	76
9	0-3012000-0-02	HOSE CLAMP	4
10	L424833	HEATER VALVE	2
11	A8962Y03	HOSE INSULATION (FT)	42
12	4007256	ASSY, HANDRAIL	2
13	BLANK		
14	A9297Y04	COPPER WIRE, 14AWG (FT)	36
15	4010092	PLATE	1
16	4010093	ANGLE	1

ASSEMBLY IDENTIFIER

TR10 NS 2005

ASSEMBLY DESCRIPTION

ER
DR
CK
APP
MF

REVISIONS

NO	ER	DESCRIPTION	DR	CK	APP	MF
A	13144.5	NEW RELEASE	HH			
B		NO CHANGE				

DWG NO H6774XAC
SHEET 1
CONT ON -
DESCRIPTION (24) HYD A/C INSTL (MacBone)
DRAWN HH
DATE 9-6-05
CHECKED DES
DATE 9-6-05
APP APD
DATE 9-6-05
APP
DATE

SHEET 1
CONT ON -
LAST ECR 10015 1
CHECKED dvan
DATE 11-Jan-06
DWG NO H6774XAC

Fairmont Tamper™
2401 Edmund Road-Box 20
Cayce-West Columbia,
South Carolina 29171-0020
(803) 822-9160

ENG.DWG.NO.
H6774XAC

REVISIONS							
NO	ER	DESCRIPTION	ZONE	DR	CK	APP	MF
A	131445	NEW RELEASE		HH			
B		NO CHANGE					

SECTION AO-0903A

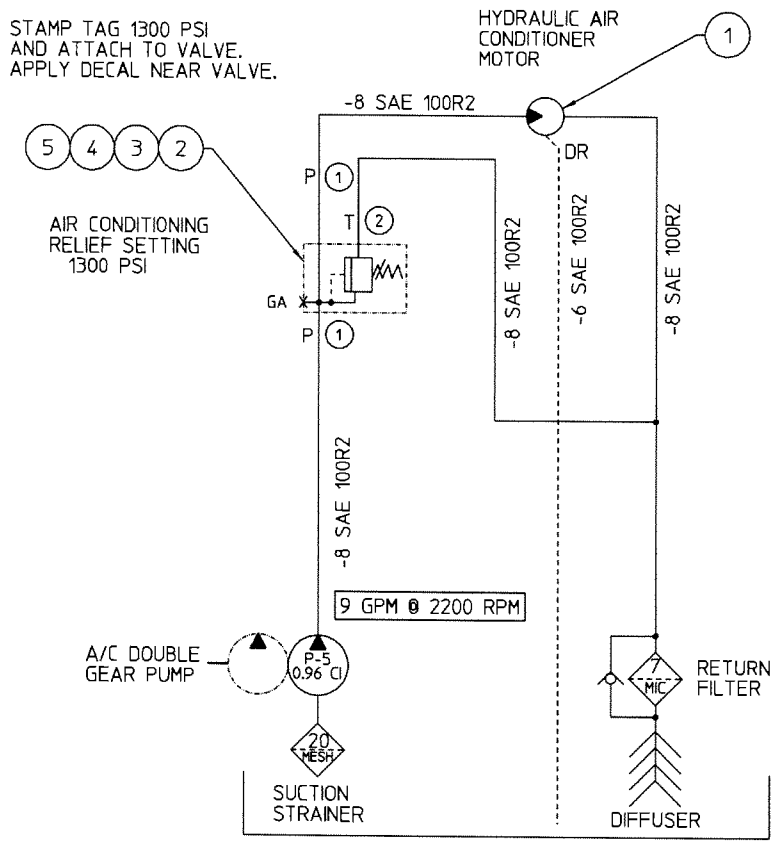

HYDRAULIC SCHEMATIC

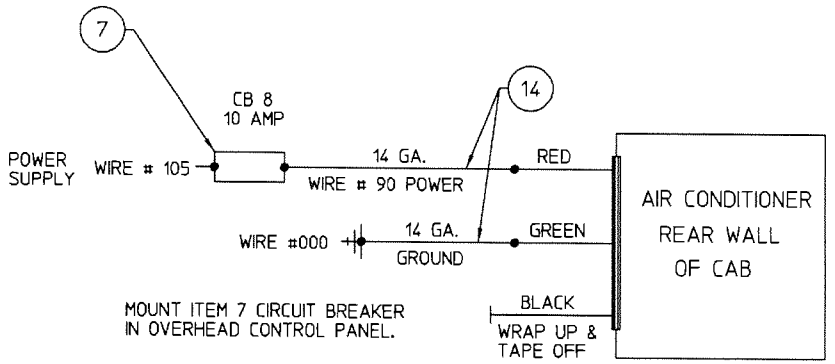

ELECTRICAL SCHEMATIC

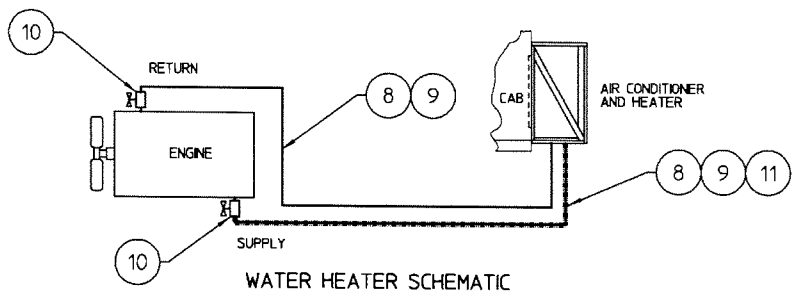

WATER HEATER SCHEMATIC

X-ASSY X20

FIG NO.	ITEM NO.	PART NUMBER	DESCRIPTION AND MATERIAL SIZE (REF.ONLY)	QTY
		SEE	SEPARATE PARTS LIST	

6 - INSTALL ON O/H CONTROL PANEL WITHIN EASY VIEW OF OPERATOR.

IMPLIED TOLERANCES
ALL DIMENSIONS ARE IN INCHES-TOLERANCE UNLESS OTHERWISE SPECIFIED

NOMINAL SIZE RANGE		PLUS OR MINUS			NOMINAL SIZE RANGE		PLUS OR MINUS		
OVER	TO	FRACTION	2 PLACE DECIMAL	3 PLACE DECIMAL	OVER	TO	FRACTION	2 PLACE DECIMAL	3 PLACE DECIMAL
-	1	1/64	.01	.003	6	24	3/64	.03	.008
1	6	1/32	.02	.005	24	-	1/16	.05	.010

ANGULAR DIMENSIONS PLUS OR MINUS 1 DEGREE

ALL MACHINED SURFACES TO HAVE A SURFACE FINISH OF 125 MICROINCHES UNLESS OTHERWISE SPECIFIED.

WELDING SPECIFICATION

UNLESS OTHERWISE SPECIFIED ALL WELDS SHOULD ADHERE TO FAIRMONT TAMPER WELDING SPECIFICATION NO. 101

WEIGHT lbs.

3rd ANGLE PROJECTION

DO NOT SCALE

SHEET 2 CONT. ON –

DESCRIPTION 124: HYD A/C INSTL (MacBone)

DRAWN	HH	DATE	9-6-05
CHECKED	DES	DATE	9-6-05
APP-ENG	APD	DATE	9-6-05
APP-MFG		DATE	
LAST ECR.	10015 1	CHECKED	dvan
		DATE	11-Jan-06

MACHINE TYPE: TR10 (NS)

Fairmont Tamper™ 2401 Edmund Road-Box 20 Cayce-West Columbia, South Carolina 29171-0020 (803) 822-9460

ENG.DWG.NO. H6774XAC

THIS DOCUMENT CONTAINS PROPRIETARY INFORMATION AND SUCH INFORMATION MAY NOT BE DISCLOSED TO OTHERS FOR ANY PURPOSE OR USED FOR MANUFACTURING PURPOSES WITHOUT THE WRITTEN PERMISSION OF FAIRMONT TAMPER.

ENG.DWG.NO.
H6774XAC

REVISIONS							
NO	ER	DESCRIPTION	ZONE	DR	CK	APP	MF
A	131445	NEW RELEASE		HH			
B	100151	ADDED NOTE 10. 12-16-05	A-4	HH	DES	APD	

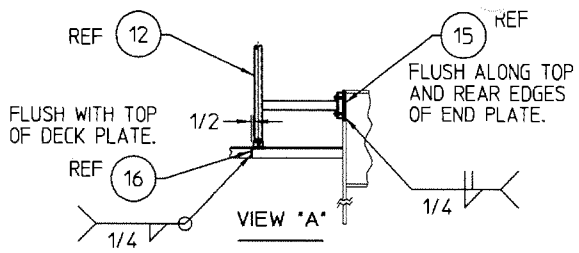

POSITION USING IT-12 AS GUIDE.

SECTION AO-0903A

NOTES:

1. REAR MOST PUMP ON ENGINE ASSEMBLY IS A DOUBLE GEAR PUMP. REAR SECTION P5 IS DEDICATED TO HYDRAULIC AIR CONDITIONER.
2. RELIEF VALVE SETTING IS 1300 PSI.
3. SEPARATE AIR CONDITIONER FROM SUBBASE BRKT. MOUNT SUBBASE BRACKET TO REAR CAB WALL. ALINE RECTANGULAR CUTOUTS WITH THOSE IN CAB WALL. MARK (6) MOUNTING HOLES ON BRKT. DRILL 7/16" DIA. HOLES THRU SUBBASE BRKT.
4. SEAL AROUND MOUNTING HOLES, CUTOUTS AND ALONG OUTER EDGE OF SUBBASE BRACKET USING A PERMANENTLY FLEXIBLE EXTERIOR CAULK.
5. MOUNT SUBBASE BRACKET USING APPROPRIATE 7/16" HARDWARE.
6. MOUNT AIR CONDITIONER BACK ON SUBBASE BRKT.
7. INSTALL (3) HYDRAULIC LINES FROM AIR CONDITIONER TO RESPECTIVE LOCATIONS. (SEE HYDRAULIC SCHEMATIC ON SHEET 2.)
8. WATER HEATER SUPPLY AND RETURN HOSES ARE TO BE ROUTED TO AND FROM ENGINE.
9. INSTALL CIRCUIT BREAKER IN LEFT SIDE OF OHCP AND RUN ONE WIRE #90 TO AC UNIT FOR POWER. RUN ONE WIRE #000 FROM GROUND BUSBAR TO AC UNIT FOR GROUND.
10. CONDENSATE DRAINS NEED PLUMBED TOGETHER AND ROUTED OFF OF PORCH. MEASURE OUTLETS FOR SIZE REQUIRED. HAVE SHOP PARTS RUNNER PICK-UP ADAPTERS AND PLASTIC TUBING TO COMPLETE.

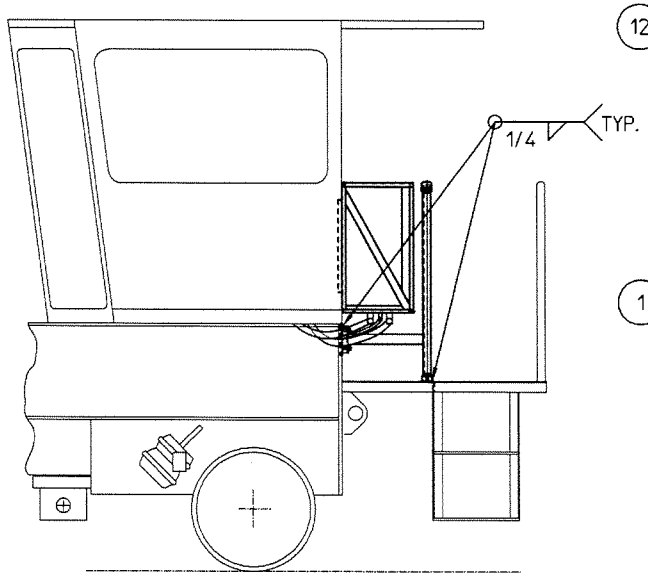

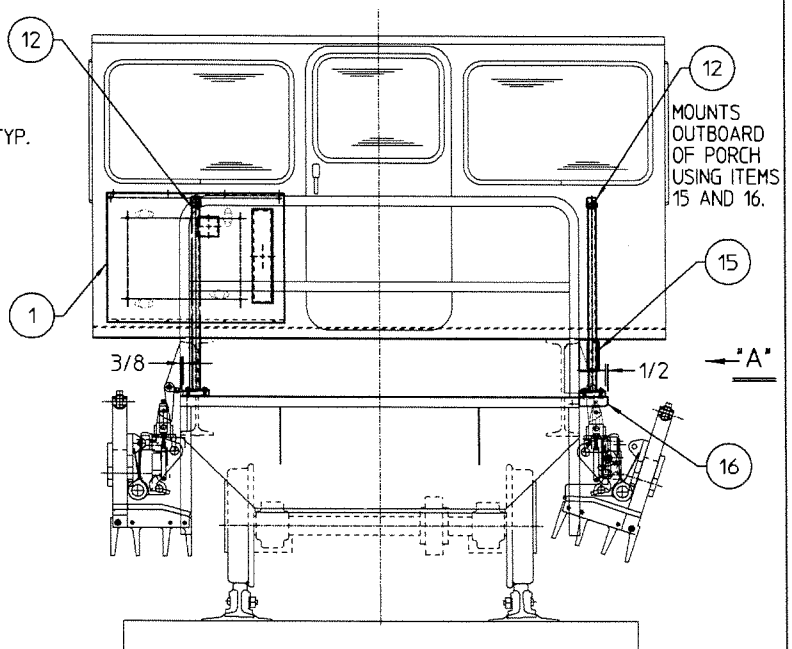

X-ASSY X20

IMPORTANT:
READ INSTRUCTIONAL MANUAL SUPPLIED WITH "MacBone Unit".
INSTALLATION INSTRUCTIONS MUST BE FOLLOWED.
(MAKE SURE ALL INFO AND MANUALS STAY WITH MACHINE.)

SEE SEPARATE PARTS LIST

FIG NO.	ITEM NO.	PART NUMBER	DESCRIPTION AND MATERIAL SIZE (REF.ONLY)	QTY

IMPLIED TOLERANCES
ALL DIMENSIONS ARE IN INCHES-TOLERANCE UNLESS OTHERWISE SPECIFIED

NOMINAL SIZE RANGE		PLUS OR MINUS			NOMINAL SIZE RANGE		PLUS OR MINUS		
OVER	TO	FRACTION	2 PLACE DECIMAL	3 PLACE DECIMAL	OVER	TO	FRACTION	2 PLACE DECIMAL	3 PLACE DECIMAL
-	1	1/64	.01	.003	6	24	3/64	.03	.008
1	6	1/32	.02	.005	24	-	1/16	.05	.010

ANGULAR DIMENSIONS PLUS OR MINUS 1 DEGREE
ALL MACHINED SURFACES TO HAVE A SURFACE FINISH OF 125 MICROINCHES UNLESS OTHERWISE SPECIFIED.

WELDING SPECIFICATION
UNLESS OTHERWISE SPECIFIED ALL WELDS SHOULD ADHERE TO FAIRMONT TAMPER WELDING SPECIFICATION NO. 101

WEIGHT lbs.
3rd ANGLE PROJECTION
DO NOT SCALE
SHEET 1 CONT. ON 2

DESCRIPTION 124: HYD A/C INSTL (MacBone)

DRAWN	HH	DATE	9-6-05
CHECKED	DES	DATE	9-6-05
APP-ENG	APD	DATE	9-6-05
APP-MFG		DATE	
LAST ECR.	10015 1	CHECKED	dvgn
		DATE	11-Jan-06

MACHINE TYPE: TR10 (NS)

Fairmont Tamper™
2401 Edmund Road-Box 20
Cayce-West Columbia,
South Carolina 29171-0020
(803) 822-9160

ENG.DWG.NO. H6774XAC

THIS DOCUMENT CONTAINS PROPRIETARY INFORMATION AND SUCH INFORMATION MAY NOT BE DISCLOSED TO OTHERS FOR ANY PURPOSE OR USED FOR MANUFACTURING PURPOSES WITHOUT THE WRITTEN PERMISSION OF FAIRMONT TAMPER.

WEST COAST MIRROR
DWG NO 0-2305756-0-01
SECTION AO-0908

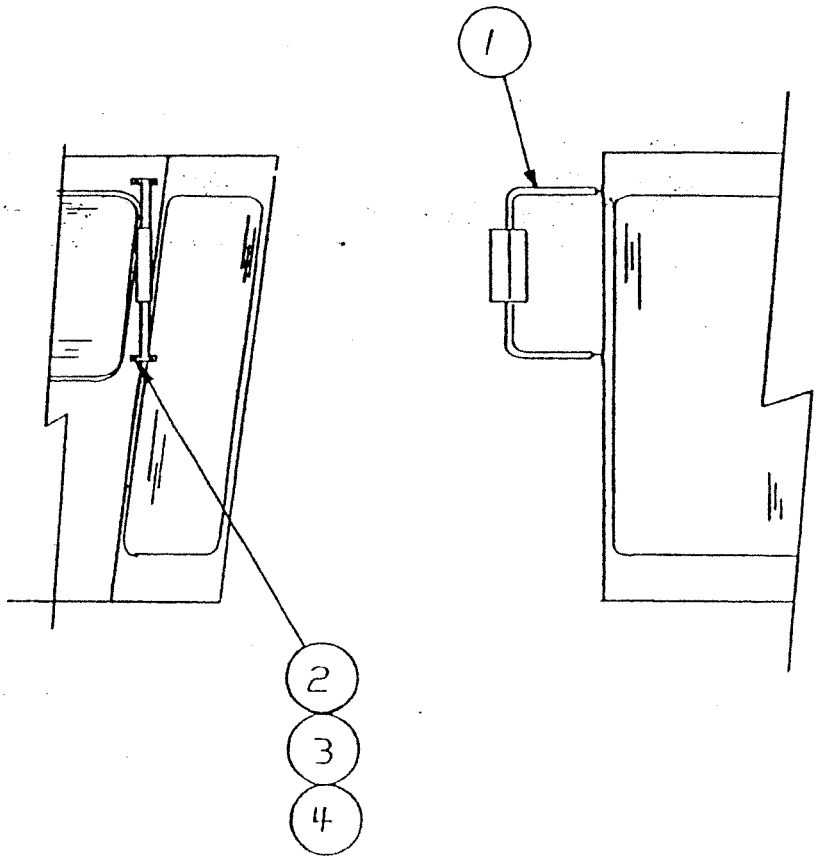

ITEM NO	PART NO	DESCRIPTION	QTY
4	L40237	1/4-20 HEAVY ESNA NUT	8
3	A0059028	1/4 MEDIUM FLAT WASHER	5
2	A0036003	1/4-20 X 3/4 HH CAPSCR	8
1	L421306	MIRROR	2

JUMP SEAT
DWG NO. 0-3502030-0-17
SECTION AO – 0907A

DEFROSTER FAN ADDITION
DWG NO 0-2202716-0-01
SECTION AO-0909

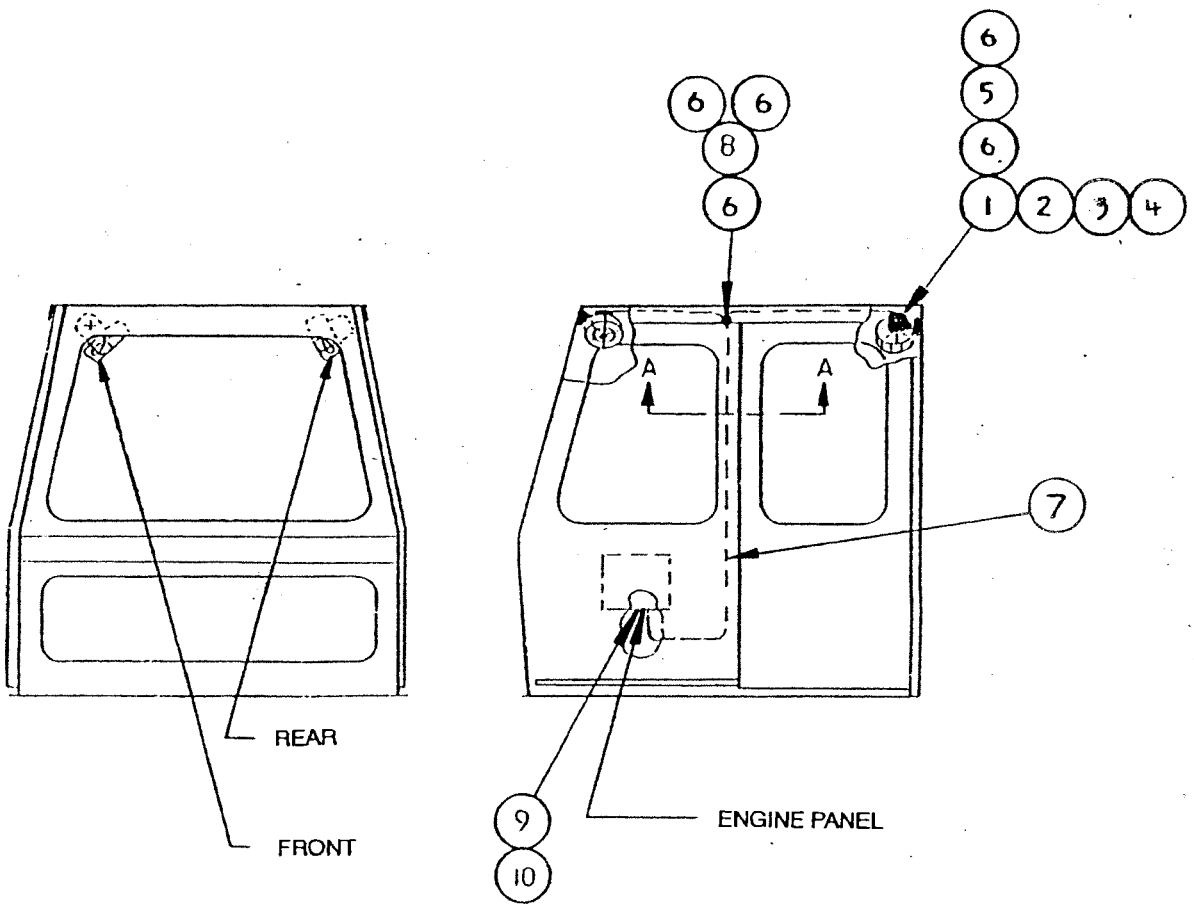

ITEM NO	PART NO	DESCRIPTION	QTY
10	Z763596-001	GROMMET	1
9	L422502	#14 SLIP ON LUG	1
8	L424985	TRIPLE BULLET CON.	1
7	L411084	#14 AWG X 15 FT WIRE	1
6	L423662	MALE BULLET CON.	7
5	L423661	FEMALE BULLET CON.	2
4	A0055006	#10-24 HEX NUT	8
3	A0061006	#10 LOCK WASHER	8
2	A0051025	#10-24 X 3/4 PAN HD MSCR	8
1	L425984	FAN	2

ENG.DWG.NO.
H6659XAB

REVISIONS							
NO	ER	DESCRIPTION	ZONE	DR	CK	APP	MF
A	13080.6	NEW RELEASE		HH			
B	13080.22	REMOVED WIRING THRU SWITCH IN O/H CNTRL PANEL. WIRE DIRECT FROM BATTERY SWITCH WIRE #3.		HH	DEB	APD	11-30-04

SECTION AO-0924A

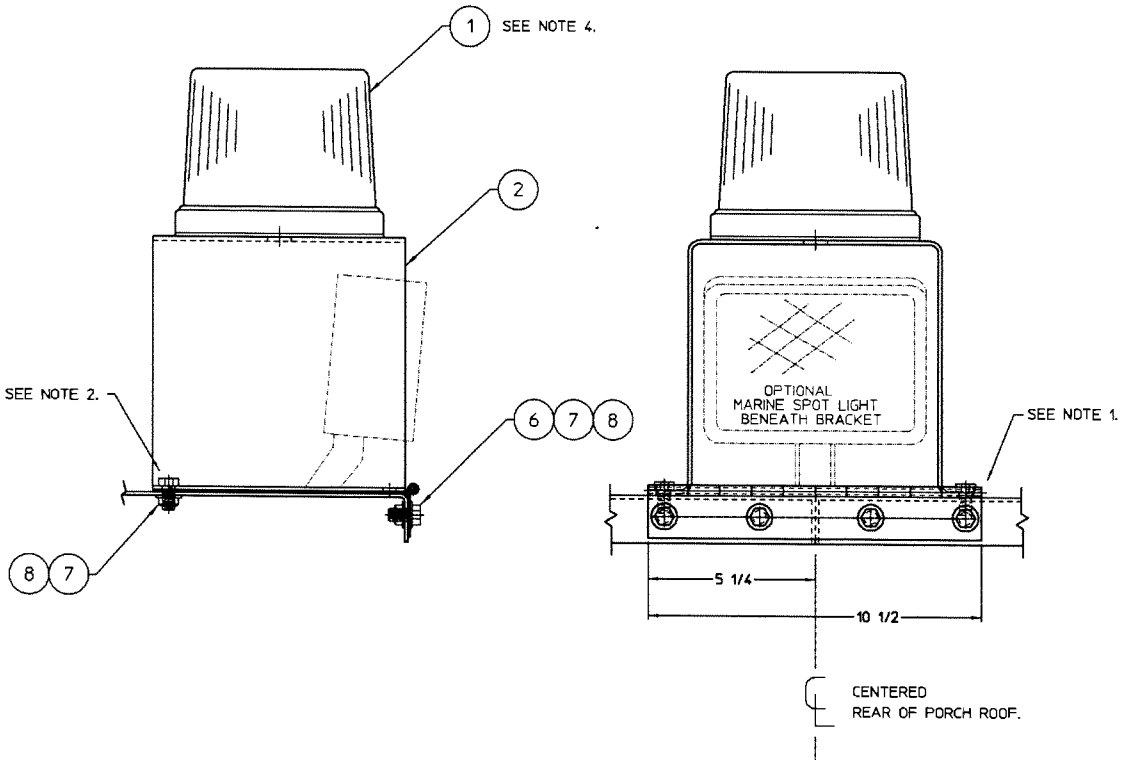

NOTES:

1. CENTER AND SQUARE BRACKET WITH ROOF. USING BRACKET AS TEMPLATE. MARK AND DRILL REAR LIP OF ROOF. FASTEN USING HARDWARE.
2. MARK ROOF WHERE BOLTS INTERSECT. DRILL ROOF AND FASTEN WITH HARDWARE. BRACKET MUST PIVOT FREELY ON HINGE.
3. ROUTE ELECTRICAL WIRING SO THAT BEACON AND BRACKET CAN PIVOT ON HINGE FOR MAINTENANCE.
4. DRILL AND MOUNT AT ASSEMBLY WITH APPROPRIATE HARDWARE.

X-ASSY X3

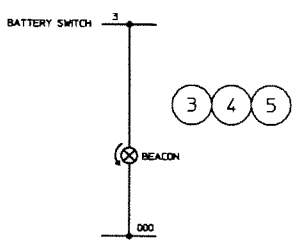

ELECTRICAL SCHEMATIC

FIG NO.	ITEM NO.	PART NUMBER	DESCRIPTION AND MATERIAL SIZE (REF.ONLY)	QTY
	8	0-3011001-0-01	3/8-16 ESNA NUT (THIN)	6
	7	A0060013	3/8 SAE FLAT WASHER	12
	6	A0036061	3/8-16 HHDCPSCR X 3/4-LG.	4
	5	B1623Y01	CORRUGATED CONDUIT (FT)	10
	4	0-3201001-0-14	GROMMET	1
	3	A9297Y03	#16 AWG WIRE (FT)	20
	2	H6658XAB	WLDT. BEACON BRKT.	1
	1	0-3104009-0-23	STROBE LIGHT (FEDERAL SIGNAL)	1

IMPLIED TOLERANCES
ALL DIMENSIONS ARE IN INCHES-TOLERANCE UNLESS OTHERWISE SPECIFIED

NOMINAL SIZE RANGE		PLUS OR MINUS			NOMINAL SIZE RANGE		PLUS OR MINUS		
OVER	TO	FRACTION	2 PLACE DECIMAL	3 PLACE DECIMAL	OVER	TO	FRACTION	2 PLACE DECIMAL	3 PLACE DECIMAL
-	1	1/64	.01	.003	6	24	3/64	.03	.008
1	6	1/32	.02	.005	24	-	1/16	.05	.010

ANGULAR DIMENSIONS PLUS OR MINUS 1 DEGREE

√ ALL MACHINED SURFACES TO HAVE A SURFACE FINISH OF 125 MICROINCHES UNLESS OTHERWISE SPECIFIED.

WELDING SPECIFICATION

UNLESS OTHERWISE SPECIFIED ALL WELDS SHOULD ADHERE TO FAIRMONT TAMPER WELDING SPECIFICATION NO. 101

WEIGHT lbs.

3rd ANGLE PROJECTION

DO NOT SCALE

SHEET 1 CONT. ON –

DESCRIPTION (24) BEACON INSTL.

DRAWN HH	DATE 9-1-04	MACHINE TYPE TR10	
CHECKED DEB	DATE 9-1-04		
APP-ENG APD	DATE 9-1-04		
APP-MFG	DATE		
LAST ECR. 13080 .22	CHECKED dvan	ENG.DWG.NO. H6659XAB	
	DATE 6-Dec-04		

Fairmont Tamper™ 2401 Edmund Road-Box 20 Cayce-West Columbia, South Carolina 29171-0020 (803) 822-9160

THIS DOCUMENT CONTAINS PROPRIETARY INFORMATION AND SUCH INFORMATION MAY NOT BE DISCLOSED TO OTHERS FOR ANY PURPOSE OR USED FOR MANUFACTURING PURPOSES WITHOUT THE WRITTEN PERMISSION OF FAIRMONT TAMPER.

NO	ER	REV. DESCRIPTION	ZONE	DR	CK	APP	MF
1	890,1	REL					

SECTION AO-0926

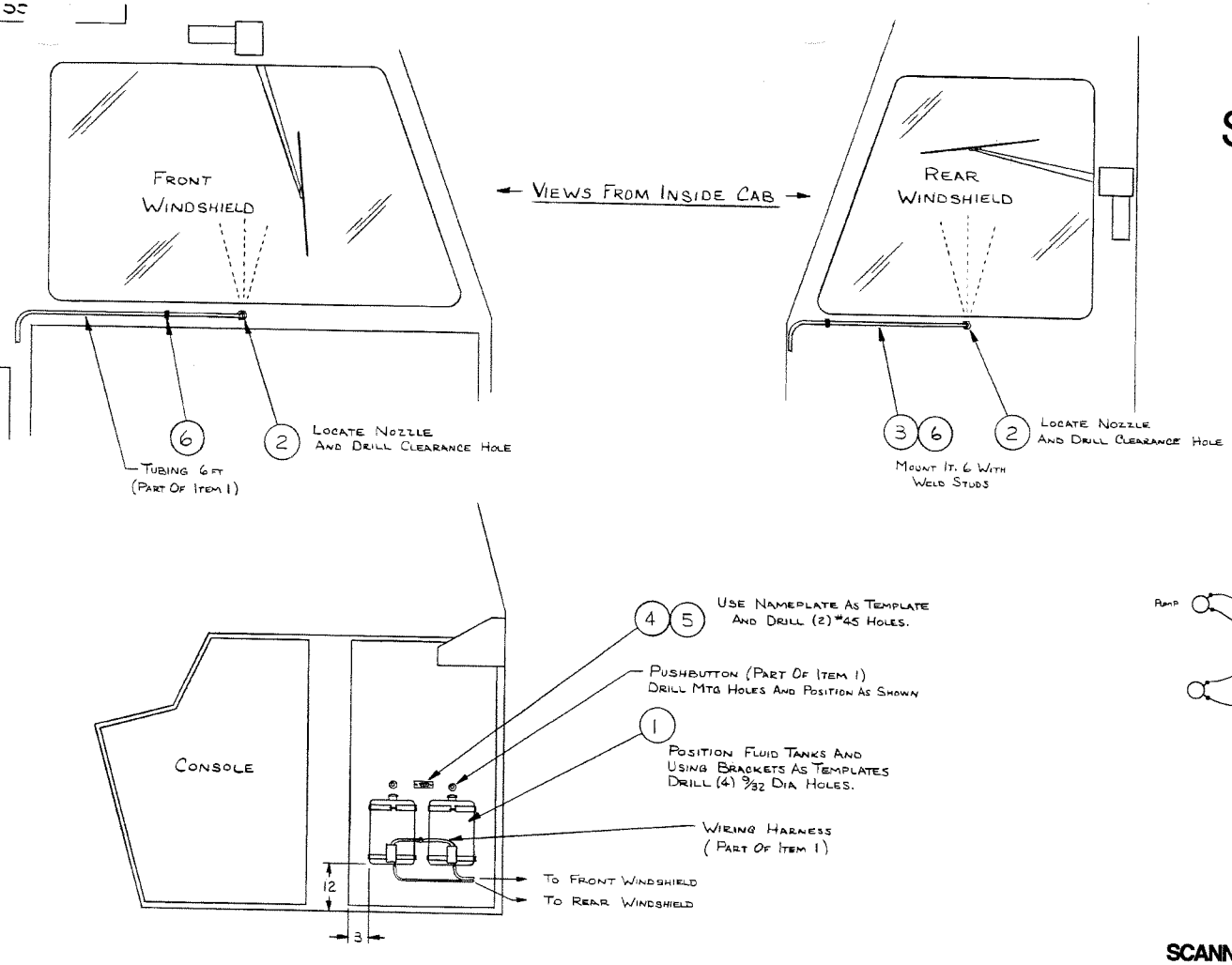

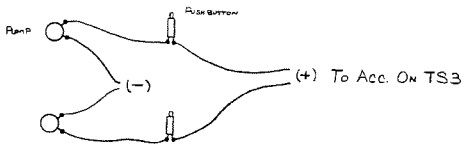

SCHEMATIC

FIG. NO.	ITEM NO.	PART NUMBER	DESCRIPTION AND MATERIAL SIZE (REF. ONLY)	QTY
	6	L424859	HOSE CLAMP	10
	5	A0071070	#2 x 3/16 DRIVE SCREW	2
	4	C3598Y01	NAMEPLATE - WASHER	1
	3	0-3422000-0-03	1/8 I.D. PLASTIC TUBING (FT)	16
	2	C3446Y02	NOZZLE SPRAY KIT	1
	1	C3446Y01	3.8 L. RESERVOIR KIT	2

SCANNED

REVISION ____ OF THIS DRAWING HAS BEEN SCANNED INTO THE CADCAM/DRA BASE.

INITIALS ____ DATE ____

IMPLIED TOLERANCES

ALL DIMENSIONS ARE IN INCHES TOLERANCE UNLESS OTHERWISE SPECIFIED

NOMINAL SIZE RANGE OVER	TO	PLUS OR MINUS FRACTION	2 PLACE DECIMAL	3 PLACE DECIMAL	NOMINAL SIZE RANGE OVER	TO	PLUS OR MINUS FRACTION	2 PLACE DECIMAL	3 PLACE DECIMAL
–	1	1/64	.01	.003	6	24	3/64	.03	.008
1	6	1/32	.02	.006	24	–	1/16	.05	.010

ANGULAR DIMENSIONS PLUS OR MINUS 1 DEGREE

ALL MACHINED SURFACES TO HAVE A SURFACE FINISH OF 125 MICROINCHES UNLESS OTHERWISE SPECIFIED.

WEIGHT ____ lbs.

3rd ANGLE PROJECTION

DO NOT SCALE

LAST ITEM NO. USED

DESCRIPTION (30): WINDSHIELD WASHER INSTL

DRAWN K. DUNN	DATE 3-5-91	MACHINE TYPE G04S
CHECKED	DATE 3/25/91	
APP-ENG	DATE 3-25-91	
APP-MFG	DATE	
SHEET 1	CONT. ON ~	ENG. DWG. NO. C3557W

TAMPER CORP.
2401 Edmund Road Box 33
Cayce West Columbia
South Carolina 29171-0030
Tel: (803) 796-1940

THIS DOCUMENT CONTAINS PROPRIETARY INFORMATION AND SUCH INFORMATION MAY NOT BE DISCLOSED TO OTHERS FOR ANY PURPOSE OR USED FOR MANUFACTURING PURPOSES WITHOUT THE WRITTEN PERMISSION OF TAMPER.

ENGR-33A

A B C D E F G H

ENG.DWG.NO.
B6549XAE

REVISIONS							
NO	ER	DESCRIPTION	ZONE	DR	CK	APP	MF
A	13080.28	NEW RELEASE		JFB			
B	13144.2	ITEM 1 WAS 0-3106004-0-01 QTY 1.		HH	DES	APD	7-11-05
C	100151	IT-4 WAS A9297Y04, QTY WAS 12. DELETED IT-5, IT-6 WAS A0036007, QTY WAS 2. IT-7 QTY WAS 2.	PL	HH	DES	APD	12-16-05

REMOVE BACK-UP ALARM ON REAR OF CAB. RETURN TO STORES AS 0-3106004-0-01.

SECTION AO-0927

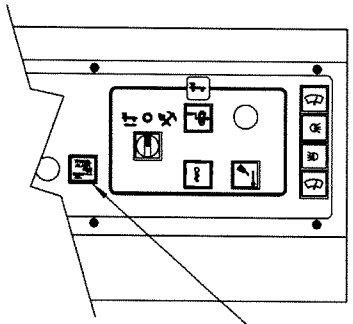

DETAIL A

2 3 8

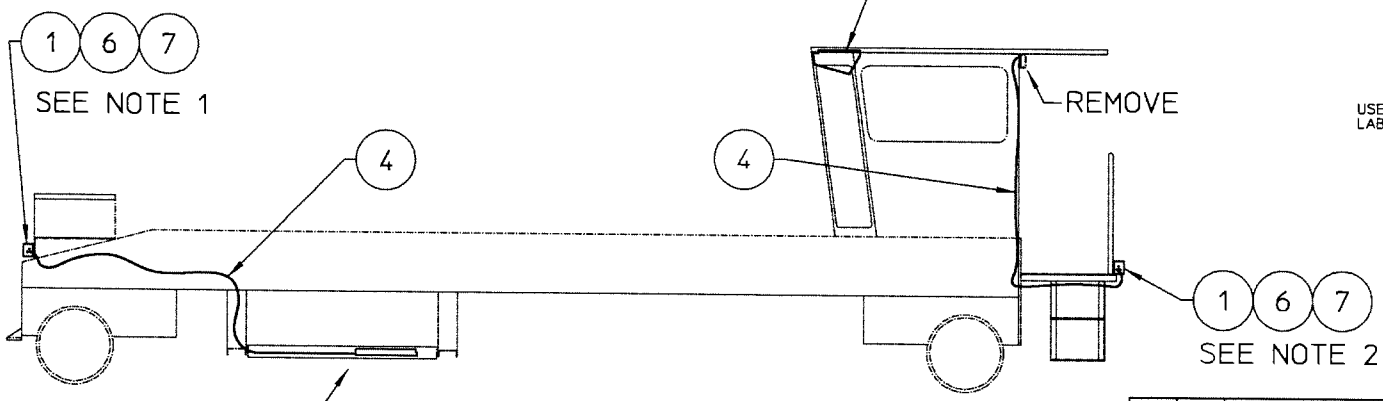

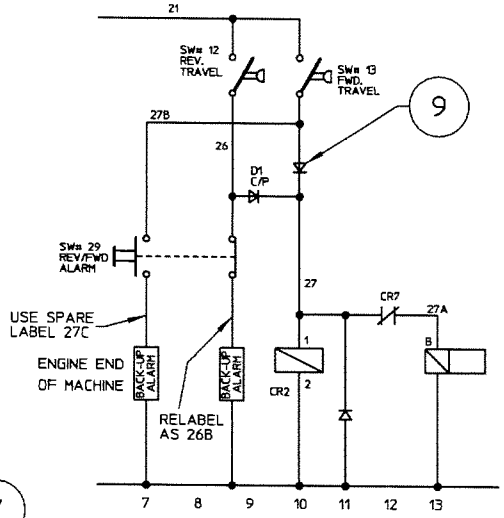

ELECTRICAL SCHEMATIC

FIG NO.	ITEM NO.	PART NUMBER	DESCRIPTION AND MATERIAL SIZE (REF.ONLY)	QTY
	9	L425479	DIODE	1
	8	A0653Y03	CONTACT BLOCK NO-NC	1
	7	L41157	ESNA NUT 1/4-20	8
	6	A0037012	1/4-20 X 7/8 HEX HD CPSCR	8
	5	B1623Y01	CORRUGATED CONDUIT (FT)	12
	4	176444	CABLE, 16/2 SUPER-TREX (FT)	25
	3	A0655Y05	SWITCH, PUSHBUTTON, MAINT.	1
	2	C3904Y39	FILM INSERT,TRAVEL ALARM	1
	1	0-3106004-0-17	ALARM, BACK-UP	2

NOTES:

1. LOCATE ALONG INNER EDGE OF BOX MT. DRILL HOLES USING ALARM AS TEMPLATE. MOUNT USING APPROPRIATE HARDWARE.

2. LOCATE ON RIGHT SIDE OF KICK PLATE. DRILL HOLES USING ALARM AS TEMPLATE. MOUNT USING APPROPRIATE HARDWARE.

PLOT@-2

IMPLIED TOLERANCES
ALL DIMENSIONS ARE IN INCHES-TOLERANCE UNLESS OTHERWISE SPECIFIED

NOMINAL SIZE RANGE		PLUS OR MINUS			NOMINAL SIZE RANGE		PLUS OR MINUS		
OVER	TO	FRACTION	2 PLACE DECIMAL	3 PLACE DECIMAL	OVER	TO	FRACTION	2 PLACE DECIMAL	3 PLACE DECIMAL
-	1	1/64	.01	.003	6	24	3/64	.03	.008
1	6	1/32	.02	.005	24	-	1/16	.05	.010

ANGULAR DIMENSIONS PLUS OR MINUS 1 DEGREE

ALL MACHINED SURFACES TO HAVE A SURFACE FINISH OF 125 MICROINCHES UNLESS OTHERWISE SPECIFED.

WELDING SPECIFICATION

UNLESS OTHERWISE SPECIFIED ALL WELDS SHOULD ADHERE TO FAIRMONT TAMPER WELDING SPECIFICATION NO. 101

WEIGHT lbs.

3rd ANGLE PROJECTION

DO NOT SCALE

SHEET 1 CONT. ON –

DESCRIPTION 124
DUAL BACK-UP ALARM

DRAWN JFB	DATE 12/16/04	MACHINE TYPE TR10 NS 2004
CHECKED MBS	DATE 01/05/05	
APP-ENG MBS	DATE 01/05/05	
APP-MFG	DATE	
LAST ECR. 10015 1	CHECKED dvan DATE 11-Jan-06	ENG.DWG.NO. B6549XAE

Fairmont Tamper INC. 2401 Edmund Road-Box 20 Cayce-West Columbia, South Carolina 29171-0020 (803) 822-9160

THIS DOCUMENT CONTAINS PROPRIETARY INFORMATION AND SUCH INFORMATION MAY NOT BE DISCLOSED TO OTHERS FOR ANY PURPOSE OR USED FOR MANUFACTURING PURPOSES WITHOUT THE WRITTEN PERMISSION OF FAIRMONT TAMPER.

ENG.DWG.NO.
A7720XAB

REVISIONS							
NO	ER	DESCRIPTION	ZONE	DR	CK	APP	MF
1	7492.2	NEW RELEASE		HH			
2		ADDED WIRING DIAGRAM		JK			

SECTION AO-0928

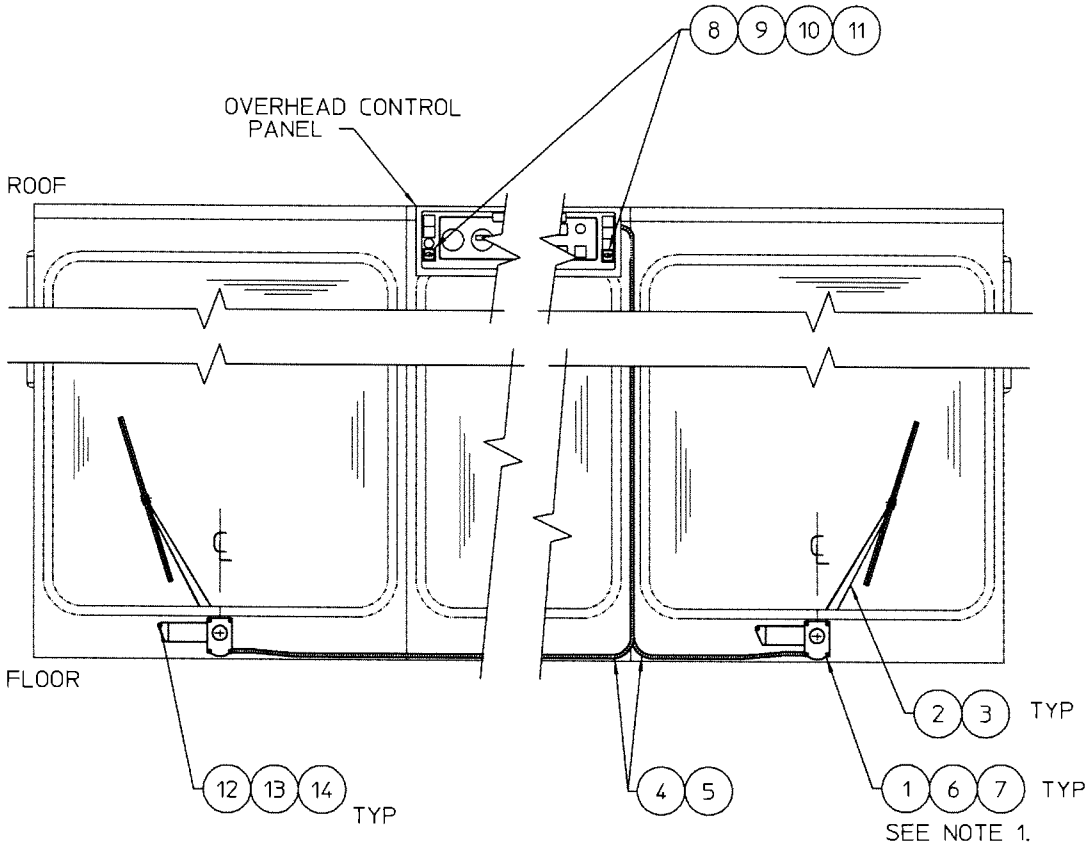

FORWARD VIEW INSIDE CAB

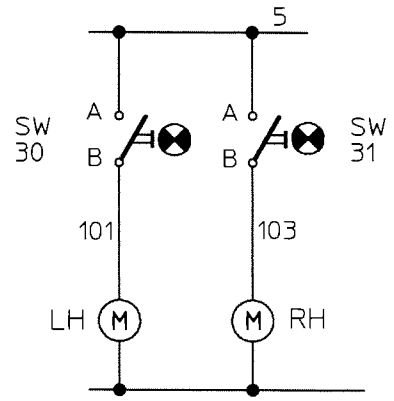

WIRING

FIG NO.	ITEM NO.	PART NUMBER	DESCRIPTION AND MATERIAL SIZE (REF.ONLY)	QTY	
	14	A0055006	10-24 PLATED HEX NUT	2	
	13	A0061006	#10 PLATED LOCK WASHER	2	
	12	A0050054	10-24 X 1/2 PL RD HD MS	2	
	11	A1920Y07	FILM INSERT (WIPER)	2	
	10	0-3101019-0-09	MINI LAMP (FOR SW.)	2	
	9	A0653Y01	CONTACT BLOCK (NO-NO)	2	
	8	A0655Y03	PUSHBUTTON SW. MAINT.	2	
	7	L423661	FEMALE CONNECTOR	2	
	6	L423662	MALE CONNECTOR	4	
	5	B1623Y01	CORRUGATED CONDUIT 1/4" (FT)	13	
	4	A9297Y04	WIRE # 14 AWG. (FT)	17	
	3	0-3502003-0-01	WIPER BLADE	2	
	2	0-3502050-0-01	WIPER ARM	2	
	1	0-3502007-0-01	WINDSHIELD WIPER MOTOR	2	

AB

X-ASSY
X 10
PLOT .10

NOTE:
1. LOCATE MOTOR, CENTERED BELOW EACH OUTSIDE FRONT WINDOW. MARK & DRILL MTG. HOLES (1) Ø21/32 & (1) Ø15/64 PER WIPER.

IMPLIED TOLERANCES
ALL DIMENSIONS ARE IN INCHES-TOLERANCE UNLESS OTHERWISE SPECIFIED

NOMINAL SIZE RANGE		PLUS OR MINUS			NOMINAL SIZE RANGE		PLUS OR MINUS		
OVER	TO	FRACTION	2 PLACE DECIMAL	3 PLACE DECIMAL	OVER	TO	FRACTION	2 PLACE DECIMAL	3 PLACE DECIMAL
-	1	1/64	.01	.003	6	24	3/64	.03	.008
1	6	1/32	.02	.005	24	-	1/16	.05	.010

ANGULAR DIMENSIONS PLUS OR MINUS 1 DEGREE

√ ALL MACHINED SURFACES TO HAVE A SURFACE FINISH OF 125 MICROINCHES UNLESS OTHERWISE SPECIFED.

WELDING SPECIFICATION

UNLESS OTHERWISE SPECIFIED ALL WELDS SHOULD ADHERE TO FAIRMONT TAMPER WELDING SPECIFICATION NO. 101

WEIGHT lbs.

3rd ANGLE PROJECTION

DO NOT SCALE

SHEET 1 CONT. – ON –

DESCRIPTION Q24
LOWER WINDOW WIPER KIT

DRAWN HH	DATE 4-24-95	MACHINE TYPE TR10
CHECKED DV	DATE 4/25/95	
APP-ENG KH	DATE 4/25/95	
APP-MFG	DATE	
LAST ECR. 7546. 1	CHECKED dvan DATE 19-May-95	ENG.DWG.NO. A7720XAB

Fairmont Tamper™ 2401 Edmund Road-Box 20 Cayce-West Columbia, South Carolina 29171-0020 (803) 822-9160

THIS DOCUMENT CONTAINS PROPRIETARY INFORMATION AND SUCH INFORMATION MAY NOT BE DISCLOSED TO OTHERS FOR ANY PURPOSE OR USED FOR MANUFACTURING PURPOSES WITHOUT THE WRITTEN PERMISSION OF FAIRMONT TAMPER.

ENG.DWG.NO

H7167YAA

DIFFERENT DRIVE RATIO PULSE SETTINGS
16-TOOTH DRIVE SPROCKET, 20-MPH "PULSE" SETTING (44120)
20-TOOTH DRIVE SPROCKET, 25-MPH "PULSE" SETTING (35290)
23-TOOTH DRIVE SPROCKET, 30-MPH "PULSE" SETTING (30690)

REVISIONS

NO	ER	DESCRIPTION	ZONE	DR	CK	APP	MF
B	13117.17	RELEASED SHEET 2.		HH			
D	100250	PULSE SETTINGS WERE INCORRECT. 1-6-06		HH	DES	APD	

SECTION AO-0929

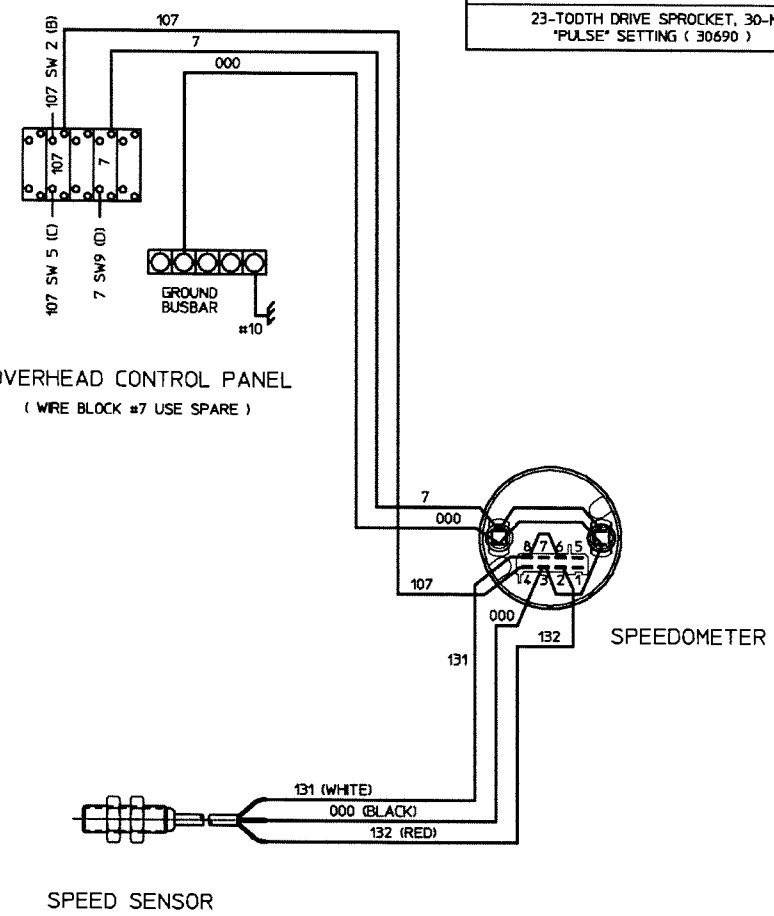

WIRING DIAGRAM

MANUAL CALIBRATION FOR SPEEDOMETER WITH A KNOWN VALUE (PuLSE)

TO CALIBRATE YOUR VDO SPEEDOMETER MANUALLY:

1. PRESS AND HOLD IN THE BUTTON ON THE FRONT OF THE SPEEDOMETER AS YOU TURN ON THE IGNITION. HOLD IN THE BUTTON UNTIL THE WORD "PuLSE" IS DISPLAYED ON THE LCD READOUT.

2. AS SOON AS YOU SEE THE WORD "PuLSE", RELEASE THE BUTTON. AFTER A FEW SECONDS, THE DISPLAY WILL START FLASHING A SERIES OF NUMBERS THAT YOU CAN CHANGE TO REPRESENT THE CORRECT CALIBRATION IMPULSE VALUE. FOR EXAMPLE A NUMBER LIKE 50000 WILL SHOW ON THE DISPLAY, WITH EACH DIGIT FLASHING IN TURN, EXCEPT FOR THE LAST DIGIT ON THE RIGHT, WHICH IS FIXED: FIRST, THE SECOND 0 FROM THE RIGHT; THEN THE THIRD 0 FROM THE RIGHT; THEN, THE NEXT 0; AND FINALLY, THE 5.

3. AS EACH NUMBER FLASHES, PRESS THE BUTTON TO CHANGE IT UNTIL CORRECT DIGIT APPEARS (THAT IS, THE NUMBER YOU WISH TO INPUT).

   FOR EXAMPLE.
   WAIT UNTIL THE DIGIT STARTS TO FLASH.
   WHEN IT DOES, PRESS THE BUTTON TO START CYCLING THROUGH THE NUMBERS UNTIL CORRECT DIGIT APPEARS.
   RELEASE THE BUTTON.
   REPEAT THE PROCESS TO SET THE '4' CORRECT VALUES.

4. WHEN YOU ARE SATISFIED YOU HAVE PROPERLY ENTERED THE CORRECT CALIBRATION VALUE --- TAKE YOUR FINGER OFF THE BUTTON AND WAIT.

   THE SPEEDOMETER WILL REVERT BACK TO NORMAL OPERATING MODE. AT THIS POINT, THE MANUAL CALIBRATION PROCESS IS COMPLETE.

Y-ASSY X3

FIG NO.	ITEM NO.	PART NUMBER	DESCRIPTION AND MATERIAL SIZE (REF.ONLY)	QTY

IMPLIED TOLERANCES
ALL DIMENSIONS ARE IN INCHES-TOLERANCE UNLESS OTHERWISE SPECIFIED

NOMINAL SIZE RANGE OVER	TO	PLUS OR MINUS FRACTION	2 PLACE DECIMAL	3 PLACE DECIMAL	NOMINAL SIZE RANGE OVER	TO	PLUS OR MINUS FRACTION	2 PLACE DECIMAL	3 PLACE DECIMAL
-	1	1/64	.01	.003	6	24	3/64	.03	.005
1	6	1/32	.02	.005	24	-	1/16	.05	.010

ANGULAR DIMENSIONS PLUS OR MINUS 1 DEGREE
ALL MACHINED SURFACES TO HAVE A SURFACE FINISH OF 125 MICROINCHES UNLESS OTHERWISE SPECIFIED

WEIGHT lbs.

3rd ANGLE PROJECTION

DO NOT SCALE

WELDING SPECIFICATION
UNLESS OTHERWISE SPECIFIED ALL WELDS SHOULD ADHERE TO FAIRMONT TAMPER WELDING SPECIFICATION 101

DESCRIPTION (24)
SPEEDOMETER KIT

DRAWN HH	DATE 6-8-05	MACHINE TYPE TR10	
CHECKED DES	DATE 6-8-05		
APP-ENG APD	DATE 6-8-05		
SHEET 2	CONT. ON —		
LAST ECR. 13144.3	CHECKED dvan	DATE 11-Aug-05	ENG.DWG.NO. H7167YAA

Fairmont Tamper™
2401 Edmund Road-Box 20
Cayce-West Columbia,
South Carolina 29171-0020
(803) 822-9160

Section B

Power Plant
(Engine Components)

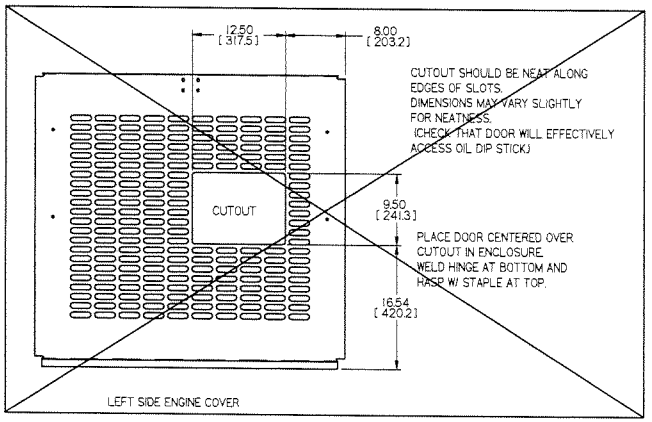

RETAINED CUTOUT INFO FOR HISTORICAL PURPOSES.

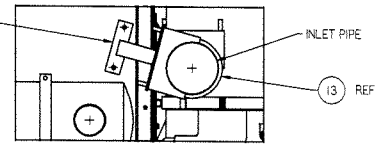

POSITION SUPPORT BRACKET AS SHOWN.
DRILL HOLES IN ENCLOSURE AND MOUNT WITH 1/2" HARDWARE.

SECTION A-A

SECTION B-1

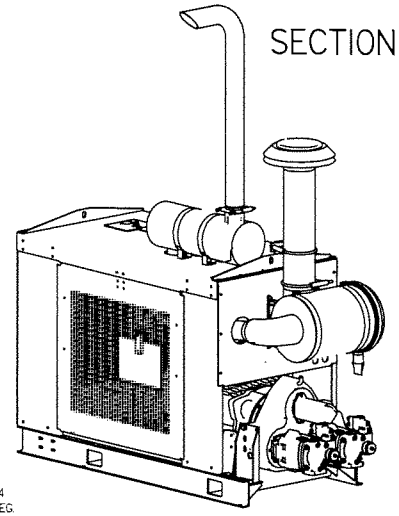

NOTE: PUMP DRIVE FOR ITEM-4 MAY NEED ROTATED 90 DEG.

NOTE.
"PADLOCK AND CHAIN"
THREE (3) LONG PADLOCKS SHOULD BE SUPPLIED IN "LOCKOUT/TAGOUT" BOX FROM NORFOLK SOUTHERN.
(CONTACT ENGINEERING)

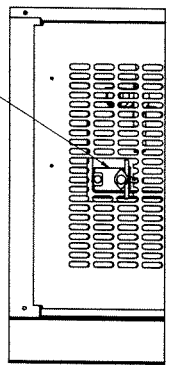

PUMP MOUNTED ON REAR OF AIR COMPRESSOR

RIGHT SIDE ENGINE COVER
(SHOWN WITH CUTOUT)

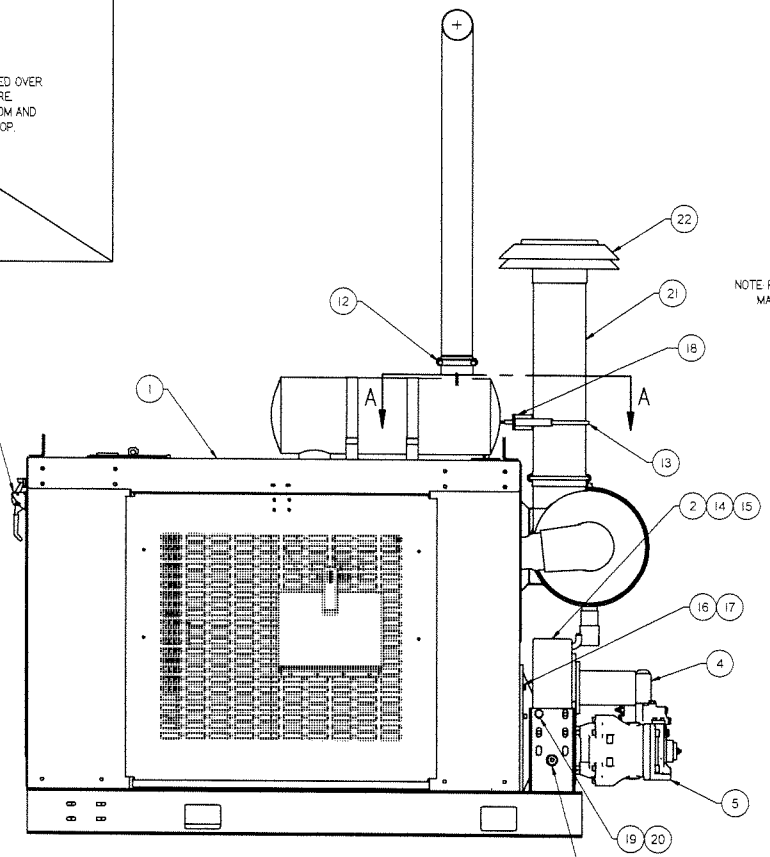

LEFT SIDE ENGINE

CHECK THAT PLUGS IN PUMP DRIVE ARE ACCESSABLE THROUGH HOLES IN BRACKET.

Item Number	Part Number	Description	Quantity
1	4011618	JOHN DEERE POWER UNIT	1
2	4011554	PUMP DRIVE, FUNK (3-PAD)	1
3	4011623	V10 PUMP	1
4	4011622	VANE DOUBLE PUMP	1
5	4011624	PVM098 PUMP	2
6*	H6886Y01	DOOR, DIP STICK	1
7*	H6894Y01	HINGE	1
8*	L421447	FIXED STAPLE & HASP	1
12	0-3012008-0-07	MUFFLER CLAMP 4.00"	1
13	0-3612012-0-16	CLAMP 7.00", FLAT U-BOLT	1
14	A0061026	3/8 HIGH COLLAR L/W	8
15	A0043067	3/8-16 X 1" NYLSHCS GR8	8
16	A0061011	3/8 HEAVY LOCK WASHER	12
17	A0038004	3/8-16 X 1 1/4 HHCS GR.8	12
18	4011938	SUPPORT BRACKET	1
19	F001103	5/8 LOCK WASHER, PLATED	8
20	F019762	5/8-11 X 1 1/2 GR 8 HHSC	8
21	0-3514015-0-01	AIR STACK	1
22	0-3514013-0-12	AIR INLET HOOD	1

CONFIDENTIAL
©COPYRIGHT 2001 HARSCO TRACK TECHNOLOGIES. THIS DRAWING OR DOCUMENT IS THE PROPERTY OF HARSCO TRACK TECHNOLOGIES AND EMBODIES CONFIDENTIAL INFORMATION, TRADE SECRET INFORMATION, AND/OR KNOW-HOW THAT IS THE PROPERTY OF HARSCO TRACK TECHNOLOGIES. BY ACCEPTING THIS DRAWING OR DOCUMENT, THE RECIPIENT AGREES (1) NOT TO PROVIDE, OR OTHERWISE MAKE AVAILABLE, THE DRAWING OR DOCUMENT, OR ANY INFORMATION OR KNOW-HOW EMBODIED THEREIN, TO ANY THIRD PARTY AND (2) NOT TO REPRODUCE OR USE THE DRAWING OR DOCUMENT TO MANUFACTURE ANY APPARATUS OR DEVICE, WITHOUT THE PRIOR WRITTEN AUTHORIZATION OF HARSCO TRACK TECHNOLOGIES.

SOLID EDGE DRAWING

IMPLIED TOLERANCES
ALL DIMENSIONS ARE IN INCHES. TOLERANCE UNLESS OTHERWISE SPECIFIED

CHANGE	RA	REVISION		DATE
100464	A	RELEASE		4-24-06
100526	B	ADDED DRAWING, DELETED IT-9 THRU 11 ADDED IT-18 THRU 20	HNDES/APD	6-20-06
100625	C	DELETED IT-6, 7 & 8 ACCESS DOOR CAME IN ENGINE, ADDED IT-21 & 22	HNDES/APD	7-17-06
120700	D	ITEM 13 QTY WAS 2 ITEM 21 WAS 0810323	HNDES/APD	8-10-06

Description: JD ENGINE ASSY & MOD.
Drawing Number: 4011619.asm
Weight: 0.000 lbm
Material: SEE ABOVE
Machine Type: TR10, NS
Drawn: hhl 4-24-06
Date Drawn
MFG Eng: DES
MFG Engr: APD

HTT
Harsco Track Technologies
Harsco
Columbia, SC

Part Number: 4011619
Size: D
Sheet: 1 of 1

Plotted by hhill on 8/22/2006 4011619.dft

SECTION B-2

MODEL AND DRAWING TO COME LATER

JOHN DEERE 6068HF475 CLOSED POWER UNIT

SPECIFICATION NUMBER:
6068HF475/250/CPU/KED1658

ENGINE PACKAGE INCLUDES:

CONTROL BOX w/ ELECTRICAL CABLE (21-FT)
AIR CLEANER MOUNTED ON ENGINE ENCLOSURE
MUFFLER w/ STACK, MOUNTED ON ENGINE ENCLOSURE
FRAME EXTENDED TO MOUNT FUNK PUMP DRIVE # 28211CB-13056

SOLID EDGE DRAWING

CONFIDENTIAL
©COPYRIGHT 2001 HARSCO TRACK TECHNOLOGIES. THIS DRAWING OR DOCUMENT IS THE PROPERTY OF HARSCO TRACK TECHNOLOGIES AND EMBODIES CONFIDENTIAL INFORMATION, TRADE SECRET INFORMATION, AND/OR KNOW-HOW THAT IS THE PROPERTY OF HARSCO TRACK TECHNOLOGIES. BY ACCEPTING THIS DRAWING OR DOCUMENT, THE RECIPIENT AGREES (1) NOT TO PROVIDE, OR OTHERWISE MAKE AVAILABLE THE DRAWING OR DOCUMENT, OR ANY INFORMATION OR KNOW-HOW EMBODIED THEREIN, TO ANY THIRD PARTY AND (2) NOT TO REPRODUCE OR USE THE DRAWING OR DOCUMENT TO MANUFACTURE ANY APPARATUS OR DEVICE, WITHOUT THE PRIOR WRITTEN AUTHORIZATION OF HARSCO TRACK TECHNOLOGIES.

IMPLIED TOLERANCES
ALL DIMENSIONS ARE IN INCHES — TOLERANCE UNLESS OTHERWISE SPECIFIED

Decimal Places	Inch Plus or Minus	Inch Fractions	Metric Decimal Places	Metric Plus or Minus	Metric Fractions
0	.5	1/2	0	1	1/2
1	.05	1/16	1	.5	1/32
2	.01	1/32	2	.25	1/64
3	.005	1/64	3	.13	1/128

UNLESS OTHERWISE SPECIFIED ALL BROKEN EDGES WILL HAVE A SURFACE FINISH OF 125 MICRO INCHES AND A DIMENSIONAL TOLERANCE OF +.00" -.01" (CHAMFER/FILLET WITHIN .01)

THIRD ANGLE PROJECTION

UNLESS OTHERWISE SPECIFIED ALL WELDS SHALL BE MADE IN ACCORDANCE TO THE LATEST AWS D1.1 WELD SPECIFICATION

CHANGE	R/L	REVISION		DATE
100464	A	RELEASE		4-24-06
100670	B	DELETED REFERENCE TO AIR CLEANER PIPE AND INLET HOOD	HM/DES/APD	5-1-06

Description: JOHN DEERE POWER UNIT
Drawing Number: Error: No reference
Machine Type: TR10, NS
Model: Error: No reference
Drawn: hhill
Date Drawn: 4-24-06
Weight: Error: No reference
Scale:
APD Eng: DES
APD Eng: APD
Sheet: SEE ABOVE

ITT
Harsco Track Technologies
Harsco
Columbia, SC

Part Number: 4011618
Size: D
Sheet: 1 of 1

Plotted by hhill on 8/22/2006 4011618.dft

CONFIDENTIAL
© COPYRIGHT 2001 HARSCO TRACK TECHNOLOGIES. THIS DRAWING OR DOCUMENT IS THE PROPERTY OF HARSCO TRACK TECHNOLOGIES AND EMBODIES CONFIDENTIAL INFORMATION, TRADE SECRET INFORMATION, AND/OR KNOW-HOW THAT IS THE PROPERTY OF HARSCO TRACK TECHNOLOGIES. BY ACCEPTING THIS DRAWING OR DOCUMENT, THE RECIPIENT AGREES (1) NOT TO PROVIDE, OR OTHERWISE MAKE AVAILABLE, THE DRAWING OR DOCUMENT, OR ANY INFORMATION OR KNOW-HOW EMBODIED THEREIN, TO ANY THIRD PARTY AND (2) NOT TO REPRODUCE OR USE THE DRAWING OR DOCUMENT TO MANUFACTURE ANY APPARATUS OR DEVICE, WITHOUT THE PRIOR WRITTEN AUTHORIZATION OF HARSCO TRACK TECHNOLOGIES.

SOLID EDGE DRAWING

SECTION B-3

PRODUCT LINE: 3 PAD PUMP DRIVE

MODEL: 28211CB - 13056

SPECIFICATIONS:

DRIVE RATIO: 1 TO 1, WITHOUT CLUTCH
SAE 3 FLYWHEEL HOUSING
11 1/2" DIA FLEX PLATE #YZ40281589

PUMP DRIVES: TOP PAD SAE "B" #4028005
(2) BOTTOM PADS SAE "C" #4028006

ADAPTER SHAFT: CENTER GEAR DRIVE #4028060

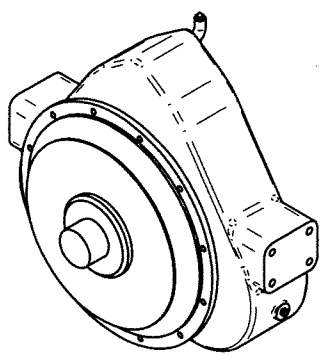

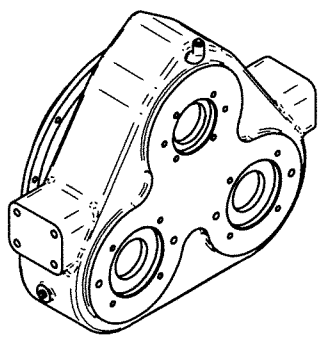

IMPLIED TOLERANCES
ALL DIMENSIONS ARE IN INCHES - TOLERANCE UNLESS OTHERWISE SPECIFIED

NOMINAL SIZE RANGE		INCH PLUS OR MINUS		NOMINAL SIZE RANGE		METRIC PLUS OR MINUS	
OVER	TO	2 PLACE DECIMAL	3 PLACE DECIMAL	OVER	TO	1 PLACE DECIMAL	2 PLACE DECIMAL
0	6	.03	.005	0	150	.8	.13
6	24	.04	.008	150	600	1.0	.20
24	-	.06	.010	-	600	1.5	.25

UNLESS OTHERWISE SPECIFIED ALL MACHINED SURFACES WILL HAVE:
A SURFACE FINISH OF 125 MICROINCHES
ANGULAR TOLERANCE OF ± 50'
CONCENTRICITY WITHIN .010

THIRD ANGLE PROJECTION

UNLESS OTHERWISE SPECIFIED ALL WELDS SHOULD ADHERE TO THE LATEST HTT WELDING SPECIFICATION 101

CHANGE	R/L	REVISION	DATE
100464	A	RELEASE	4-17-06

Description: PUMP DRIVE, FUNK (3-PAD)
Drawing Number: ----------
Machine Type: NS TR10 2006 (5)
Model: 4011554.par
Drawn: hhill
Date Drawn: 4-17-06
Weight:
Scale:
APVD Desg: DES
APVD ChEng: APD
Mat'l: SEE ABOVE

HTT
Harsco Track Technologies
Harsco
Columbia, SC

Part Number: 4011554
Size: B
Sheet: 1 of 1

Plotted by hhill on 8/22/2006 4011554.dft

ENG. DWG NO. A6947W

SECTION B-4

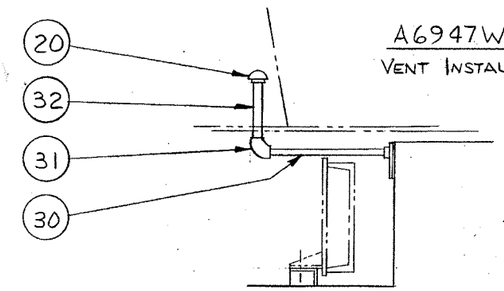

* PROTECT THREADS FOR SHIPMENT

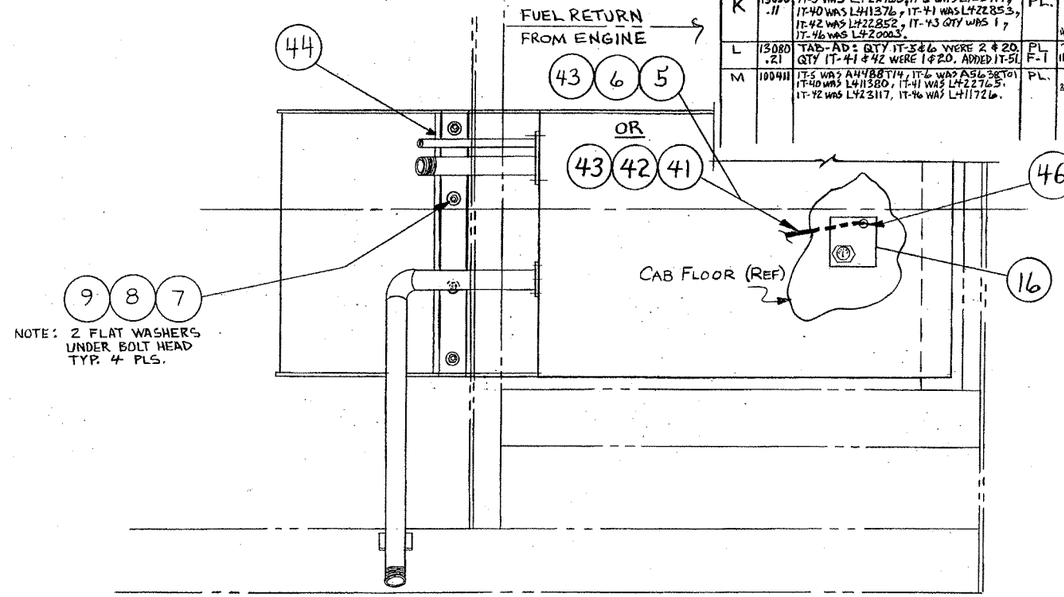

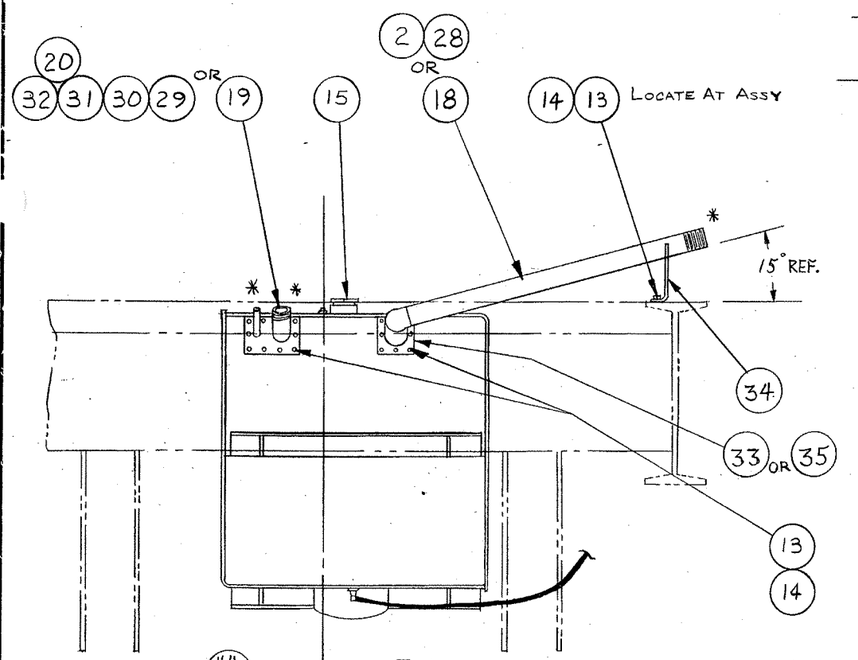

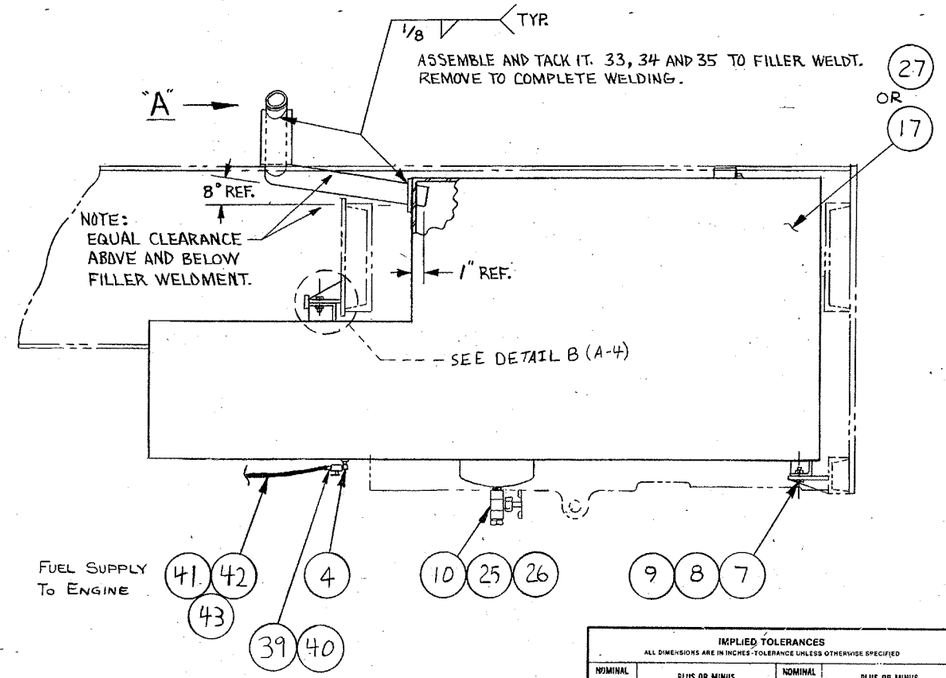

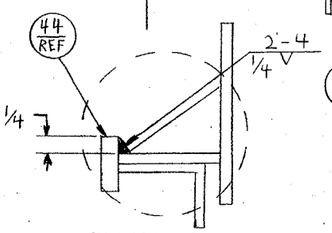

DETAIL - B

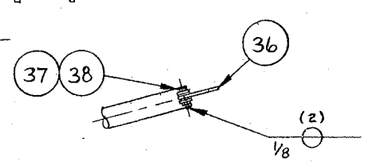

VIEW "A"
ASSY: A6947WAD

IT. NO.	PART NO.	DESCRIPTION	AC	AD
51	L420003	3/8 MP - 3/8 JIC 90°	0	1

FIG NO.	ITEM NO.	PART NUMBER	DESCRIPTION AND MATERIAL SIZE (REF. ONLY)	AC QTY	AD QTY
	46	L420003	3/8 MP-3/8 JIC 90°	1	1
	44	A3070T71	FLAT BAR 1/4x1x28	1	1
	43	0-3012000-0-01	HOSE CLAMP	2	2
	42	F012620	1/2" LP HOSE	20	40
	41	L422853	PUSH ON HOSE END	1	2
	40	L411376	ADAPTER 1/2 MP/ 1/2 JIC	1	1
	39	0-3330011-0-07	BALL VALVE 1/2"	1	1
	38	A0055016	1/2-13 HEX NUT	0	1
	37	A0036123	1/2-13 x 1 1/2 HHD CPSCR	0	1
	36	B5257Y01	LOCKING ARM	0	1
	35	B6240Y04	FILLER MOUNT	1	0
	34	B6247X01	FILLER SUPPORT	1	1
	33	B6240Y02	FILLER MOUNT	0	1
	32	A1438T57	THREADED PIPE (6 1/2")	0	1
	31	L420015	3/4 FP/FP 90° ELBOW	0	1
	30	A1438T65	THREADED PIPE (15")	0	1
	20	0-3381004-0-01	VENT	0	1
	2	0-3381010-0-01	OIL FILTER CAP	0	1
	29	C8288XAA	VENT WELD'T	0	1
	28	B6248WAA	FILLER WELD'T	0	1
	27	B9576WAB	FUEL TANK WELD'T	0	1
	26	L40207	PIPE PLUG (SQ HEAD) 1/4"	1	1
	25	L40662	CLOSE NIPPLE 1/4 NPT	1	1
	14	A0036004	1/4-20 x 3/8 HEX HD SCR	18	18
	13	A0061008	1/4 LOCK WASHER	18	18
	9	A0059005	1/2 FLAT WASHER	20	20
	8	L40767	1/2-13 ESNA NUT	8	8
	7	A0041128	1/2-13x2 SOCKET HD CPSCR	8	8
	6	L423117	3/8 LOW PRESS HOSE	20	0
	5	L422765	PUSH ON HOSE END	2	0
	4	L411731	1/2 MP 90° ADAPTER	1	1
	16	B6239XAA	GAUGE DOOR INSTL	1	1
	15	0-3307009-0-04	FUEL LEVEL GAUGE	1	1
	18	B6248WAB	FILLER WELD'T	1	0
	10	0-3410002-0-01	DRAIN VALVE	1	1
	19	B9633XAA	VENT WELD'T	1	0
	17	B9576WAA	FUEL TANK WELD'T	1	0

REVISIONS

NO	EP	DESCRIPTION	ZONE	DR	CK	APP	MF
10	10461 .7	ADDED IT. 39-46 3-23-98 IT. 4 WAS L420003, IT. 4,5+6 QTY WERE 2,4+40	A-D D-3 D-4	DC		3-26-98	
K	13050 .11	IT-5 WAS L422765, IT-6 WAS L423117, IT-40 WAS L411376, IT-41 WAS L422853, IT-42 WAS L422852, IT-43 QTY WAS 1, IT-46 WAS L420003.		PL	4-23-04		
L	13080 .21	TAB-AD: QTY IT-5&6 WERE 2 & 20. QTY IT-41 & 42 WERE 1 & 20. ADDED IT-51.	PL F-1		11-22-04	11-23-04	
M	100411	IT-5 WAS A448871/4, IT-6 WAS A563870/1 IT-40 WAS L411380, IT-41 WAS L422765. IT-42 WAS L423117, IT-46 WAS L411726.		PL	2-23-06		
3	5/24.1	N					
4	5/21.1	IT. WA. A00					
5	5/8.34.1	IT. 10 WAS L420000 ADDED IT. 25 + 26				12-8-91	
6	5/93.2	ADD ASSY AD & ITS. 27-32		KRD			
7	6/65.1	ASSY. AC AND AD: ADDED FLAT WASHER NOTE. IT. 7 WAS P/N A0036124 IT. 9 QTY. WAS 16	C1	HH		Howell 2-18-92	
8	5/93.4	ADDED IT. 33 34 AND 35. 9-29-92 ADDED ASSY. & WELD NOTES.	B3,C3 D3,E3	HH		Howell 10-7-92	
9	6/49.1	ASSY. AD: ADDED VIEW "A" & IT. 36-38	C4,PL	HH 3-18-93		Howell	3/24/93

IMPLIED TOLERANCES
ALL DIMENSIONS ARE IN INCHES-TOLERANCE UNLESS OTHERWISE SPECIFIED

NOMINAL SIZE RANGE OVER	TO	PLUS OR MINUS FRACTION	2 PLACE DECIMAL	3 PLACE DECIMAL	NOMINAL SIZE RANGE OVER	TO	PLUS OR MINUS FRACTION	2 PLACE DECIMAL	3 PLACE DECIMAL
—	1	1/64	.01	.003	6	24	3/64	.03	.008
1	6	1/32	.02	.005	24	—	1/16	.05	.010

ANGULAR DIMENSIONS PLUS OR MINUS 1 DEGREE
√ ALL MACHINED SURFACES TO HAVE A SURFACE FINISH OF 125 MICROINCHES UNLESS OTHERWISE SPECIFIED.

WEIGHT lbs. — 3rd ANGLE PROJECTION — DO NOT SCALE — LAST ITEM NO. USED 51

DESCRIPTION (30): FUEL TANK INSTL

DRAWN K. DUNN	DATE 2-2-90	MACHINE TYPE TR10	227 GAL. SWEDEN
CHECKED	DATE 2-9-90		
APP. ENG.	DATE 2-9-90		
APP. MFG	DATE		

TAMPER CORP
2401 Edmund Road Box 30
Cayce West Columbia
South Carolina 29171-0025
Tel (803) 794-1166

SHEET 3 CONT. ON

ENG. DWG. NO. A6947W

THIS DOCUMENT CONTAINS PROPRIETARY INFORMATION AND SUCH INFORMATION MAY NOT BE DISCLOSED TO OTHERS FOR ANY PURPOSE OR USED FOR MANUFACTURING PURPOSES WITHOUT THE WRITTEN PERMISSION OF TAMPER.

ENGS-32A

SECTION BO

ENGINE COMPONENTS OPTIONS

REMOTE OIL DRAIN

SECTION BO-0908 **DWG NO. C0464WAB**

ITEM	DESCRIPTION	PART NUMBER	QTY
13	ADAPTER M18 MET. 1/2 JIC	C6917Y01	1
14	FITTING	L411369	2
15	3/4 MP HOSE	L411422	0.66
16	BULKHEAD FITTINGS	0-3304011-0-01	1
18	NUT CAP	L420354	1
19	EYE	C6100T03	1
22	STENCIL, ENG OIL DRAIN	D2646Y01	1

REMOTE OIL DRAIN
DWG NO C0464WAB
SECTION BO-0908
REV 5

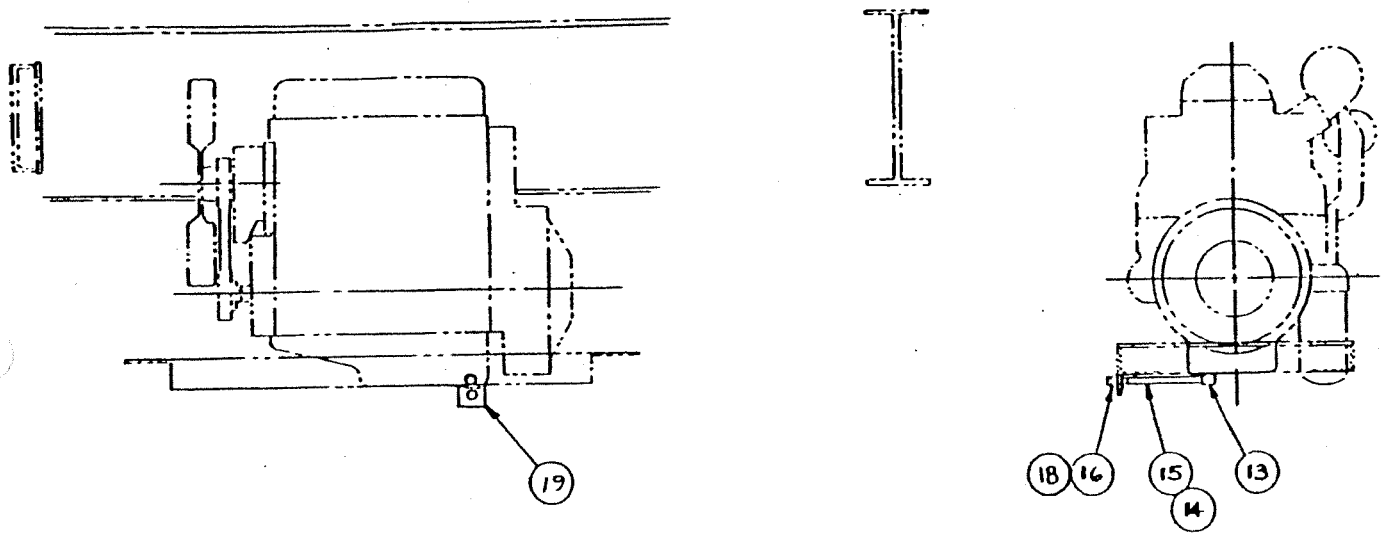

ENG. DWG. NO. A7758W

NO	ER	DESCRIPTION	ZONE	DR	CK	APP	MF
1	7512.5	NEW RELEASE					
B	13050 .2	ADDED ITEM 10. 1-9-04					
C	13147 .8	ITEM 9 WAS L40335, 10-26-05	PL				

SECTION BO-0913

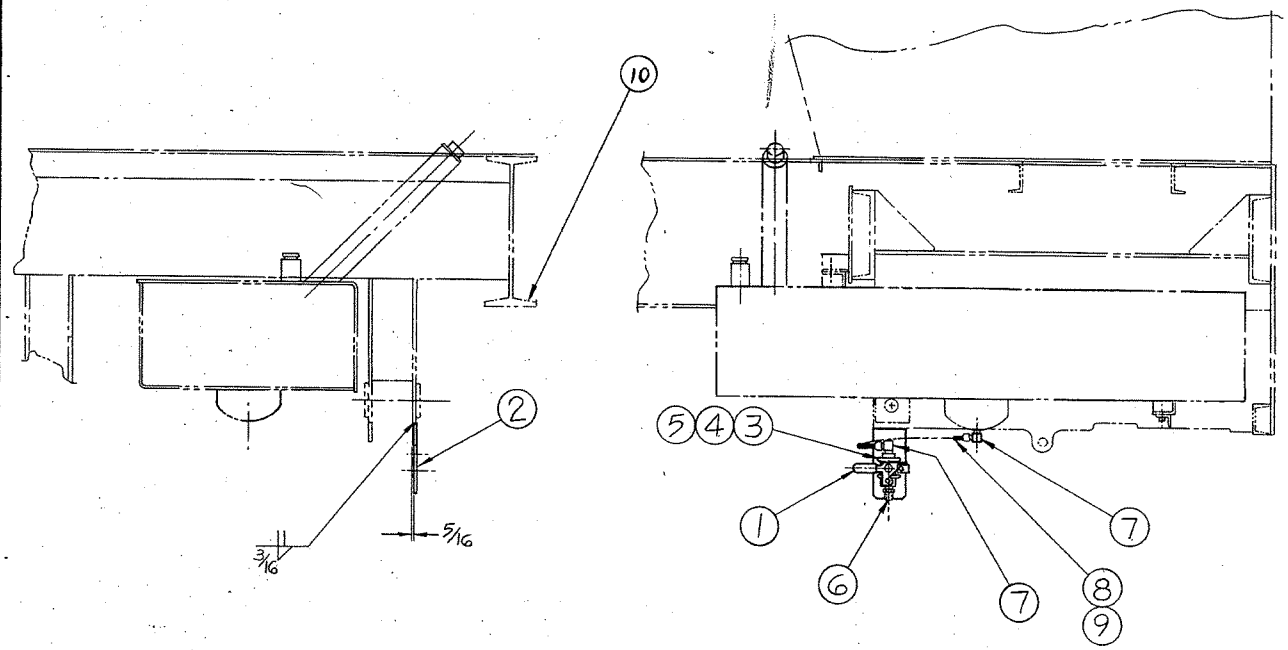

FIG NO.	ITEM NO.	PART NUMBER	DESCRIPTION AND MATERIAL SIZE (REF ONLY)	QTY
	10	D2646Y05	STENCIL, FUEL TANK DRAIN	1
	9	L423261	1/4 LP PUSH ON HOSE END	2
	8	L423094	1/4 LP HOSE (1 PC @ 4 FT)	4
	7	L420002	ADAPTOR 1/4 MP-JIC 90°	2
	6	L411385	ADAPTOR 1/4 MP-JIC STR	1
	5	A0095012	3/8-16 HEX NUT	4
	4	A0061010	3/8 MED LOCK WASHER	4
	3	0-3012009-0-02	U-BOLT	2
	2	A4160Y01	PLATE	1
	1	0-3330011-0-06	BALL VALVE LOCKING	1

DESCRIPTION (30): WATER TRAP DRAIN

DRAWN: Morell DATE: NOV. 7-85

CHECKED: SH DATE: 7-19-95

APPROVED: TH DATE: 7-19-95

APP-MFG DATE

MACHINE TYPE: TR1 (PHASE III)

Tamper — Ontario Canada Corp. 2401 Edmund Road-Box 30 Cayuga-West Caledonia, S.C. N0A 1H0 (905) 772-0050 (905) 772-9150

ENG. DWG. NO. A7758W

SHEET 1 CONT. ON —

WEIGHT lbs.

3rd ANGLE PROJECTION

DO NOT SCALE

LAST ITEM NO. USED 10

IMPLIED TOLERANCES — ALL DIMENSIONS ARE IN INCHES — TOLERANCE UNLESS OTHERWISE SPECIFIED

NOMINAL SIZE RANGE OVER	TO	PLUS OR MINUS FRACTION	2 PLACE DECIMAL	3 PLACE DECIMAL	NOMINAL SIZE RANGE OVER	TO	PLUS OR MINUS FRACTION	2 PLACE DECIMAL	3 PLACE DECIMAL
—	1	1/64	.01	.003	6	24	3/64	.03	.008
1	6	1/32	.02	.005	24	—	1/16	.05	.010

ANGULAR DIMENSIONS PLUS OR MINUS 1 DEGREE

ALL MACHINED SURFACES TO HAVE A SURFACE FINISH OF 125 MICROINCHES UNLESS OTHERWISE SPECIFIED.

THIS DOCUMENT CONTAINS PROPRIETARY INFORMATION AND SUCH INFORMATION MAY NOT BE DISCLOSED TO OTHERS FOR ANY PURPOSE OR USED FOR MANUFACTURING PURPOSES WITHOUT THE WRITTEN PERMISSION OF TAMPER.

SM35-92

the american blueprint of columbia

SECTION C-1

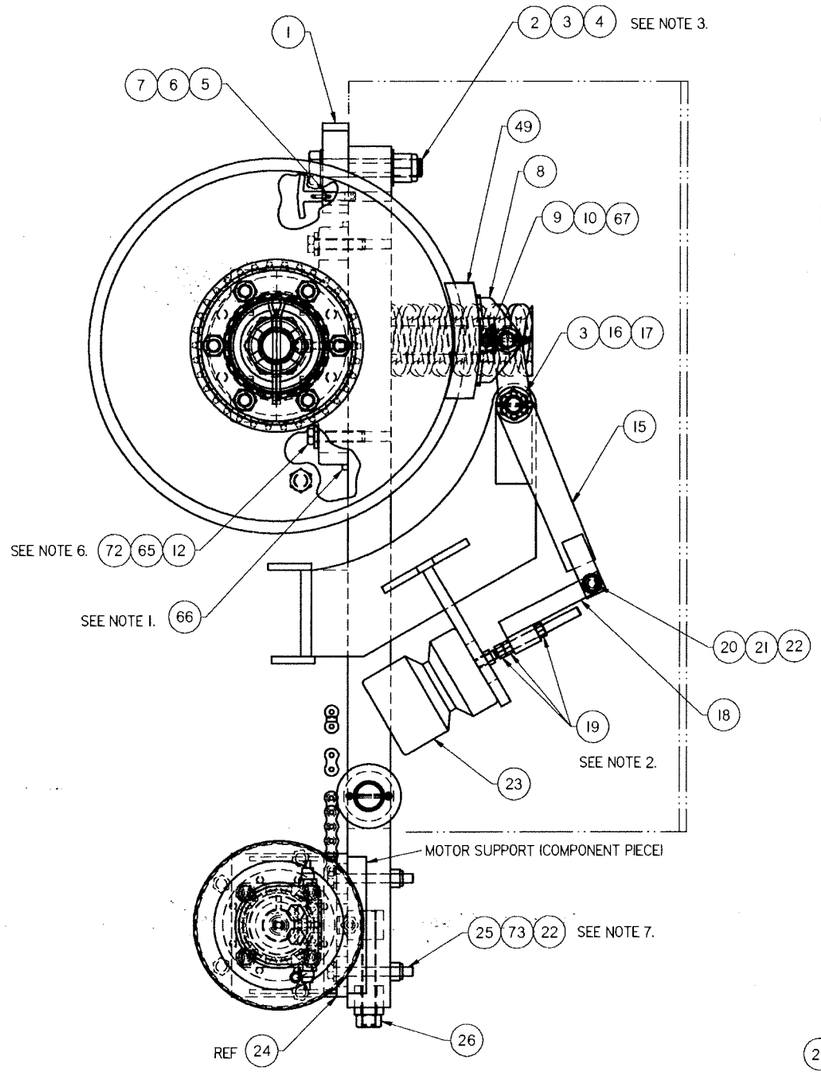

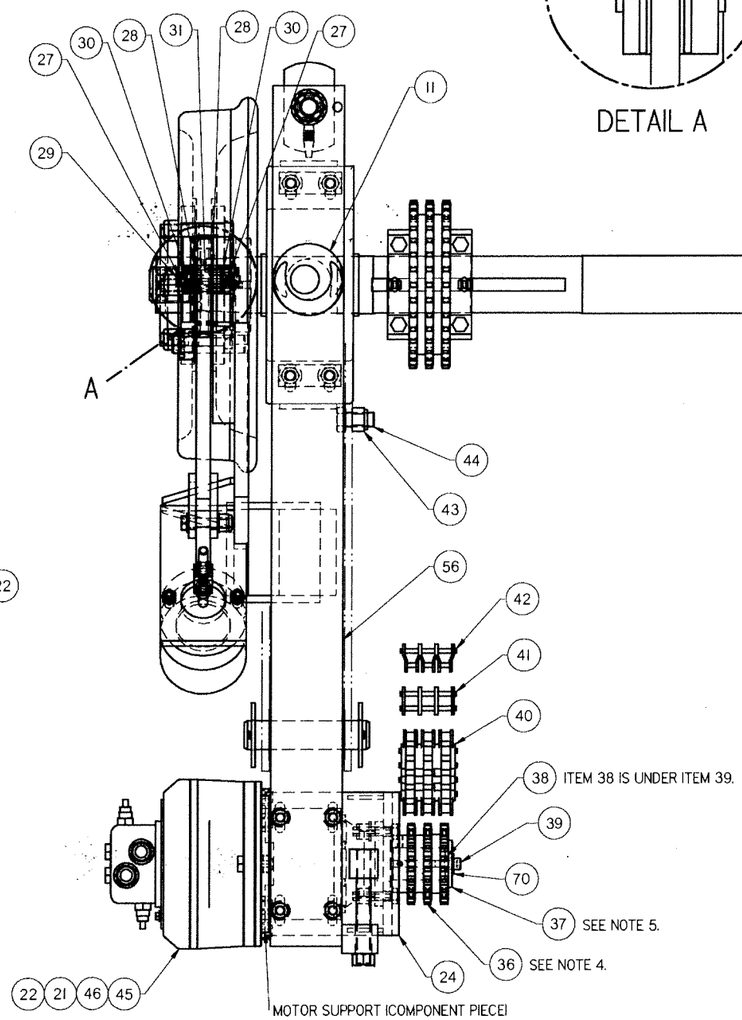

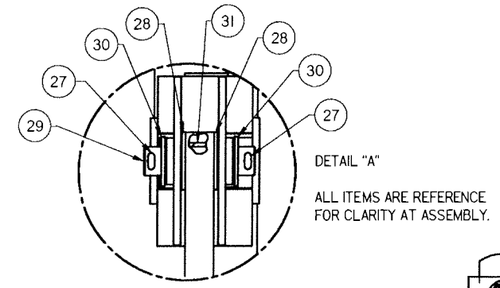

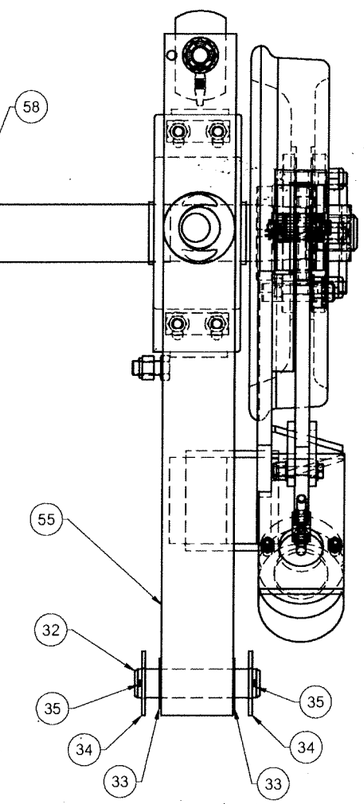

Item Number	Part Number	Description	Quantity
1	A1153Y01	LOCK	2
2	A0036288	HHCS 1 1/4-7 X 7	2
3	A0060022	1 1/4 SAE FLAT WASHER	8
4	0-3011001-0-41	1 1/4-7 ESNA NUT	2
5	Z765178-001	SPRING	2
6	0-1200117-0-05	TEE HANDLE	2
7	A1155Y01	PIN	2
8	0-2304737-0-01	BRAKE SHOE HEAD	2
9	0-2408126-0-01	PIN	2
10	A0068013	COTTER PIN, 1/8 DIA X 1"	2
11	0-3641007-0-01	SPRING, COMPRESSION	2
12	A0036224	3/4-10 X 3 1/2 HHCS	8
15	A4467Y01	LEVER	2
16	A0057013	SLOTTED HEX NUT, 1 1/4-7	2
17	A0068030	COTTER PIN 1/4 X 2	2
18	A4457YAA	LINK ASSY	2
19	A0055021	5/8-18 HEX NUT	6
20	A0036183	HHCS 5/8-11 X 3 1/4	2
21	A0059007	5/8 FLAT WASHER	8
22	L40006	ESNA NUT 5/8-11	10
23	0-3551007-0-01	CHAMBER	2
24	4011567	MOTOR MOUNT ASSY	1
25	A0036189	5/8-11 X 5 1/2 HHCS	4
26	A0150YAA	ROD, MOTOR ADJUST	1
27	A0068029	1/4 X 1 1/2 COTTER PIN	4
28	Z63081-01	INSULATING WASHER	4
29	Y691328-033	PIN	2
30	0-3019004-0-14	WASHER	4
31	Z754560-001	INSULATING BUSHING	2
32	D7735Y01	PIN	2
33	A0160Y01	SPACER	8
34	A0059014	2 FLAT WASHER	4
35	A0068032	COTTER PIN 1/4 X 2 1/2	4
36	0-1306442-0-01	SPROCKET - DRIVE 16 T.	1
37	TY780009-067	WASHER / SPACER	1
38	A0060015	1/2 SAE WSHR	1
39	A0043094	1/2-20 X 1 1/4 NYLSHCS GR8	1
40	0-3621027-0-02	TRIPLE ROLLER CHAIN ASA 80-3	10
41	0-3621028-0-02	CONNECTING LINK ASA 80-3	1
42	0-3621029-0-01	OFFSET LINK ASA 80-3	1
43	L41149	1-8 ESNA NUT	2
44	A0036254	1-8 x 2 HHCS	2
45	0-3324000-0-11	HYDRAULIC MOTOR ASSEMBLY	1
46	A0036181	5/8-11 X 2 3/4 HHCS	4
49	A1101Y01	COBRA SHOE REWORK	2
55	0-2101975-0-02	SUSP & BRAKE BRKT	1
56	0-2101976-0-02	SUSP, BRAKE & MOTOR BRKT	1
58	B8441WAD	AXLE ASSY, NON-INS	1
65	A0179Y02	BAR, LOCK	4
66	Z9669E	KEY	4
67	C1580T32	STL TUBE	2
70	A0059005	1/2 FLAT WASHER	1
72	0-3019002-0-07	3/4 HARDENED FL WASHER	8
73	0-3019002-0-06	5/8 HARDENED FL WSH	4

ASSEMBLY NOTES:

1. AFTER PROPER ALINEMENT OF AXLE, PILLOW BLOCK AND SUSPENSION BAR. LOCATE AND WELD KEYS ITEM 66 ON 3 SIDES TO ITEMS 55 AND 56.
2. ADJUST BRAKE SHOES TO 1/8" MAXIMUM WHEEL CLEARANCE.
3. TIGHTEN ESNA NUT ITEM 4 TO WHERE LOCK ITEM 1 CAN STILL BE TURNED BY HAND.
4. ASSEMBLE WITH ANTI-SEIZE COMPOUND L422137 ON HYDRAULIC MOTOR SHAFT AND BORE OF SPROCKET.
5. CENTER ITEM 37 AROUND BORE OF SPROCKET, THEN TACK WELD IN PLACE. WELD 1/8 TACKS AROUND 4 PLACES.
6. INSTALL ITEM 72 UNDER ITEMS 12 AND 65. TORQUE ITEM 12 TO 200 FT-LBS. AND BEND THE CORNERS OF ITEMS 65 OVER TO CONTACT A FLAT ON BOLT HEAD.
7. TORQUE ITEM 25 TO 110 FT-LBS.

REFERENCE TO MOUNTING ITEM 45 HYDRAULIC MOTOR.

REAR PART OF ITEM 24 MOTOR MOUNT ASSEMBLY IS ONLY TACK WELDED TO BRACKET. BREAK LOOSE FROM MOUNT.
REMOVE TOP MOST NUT FROM HYDRAULIC MOTOR BOLT AND REPLACE WITH BRACKET COMPONENT.
USE REMOVABLE LOC-TITE AND TORQUE TO 50 FT-LBS.
USE SHIM MATERIAL UNDER SUPPORT TO MINIMIZE DRAW WHEN WELDING. WELD ENDS OF BOLT ON SUPPORT TO MOTOR MOUNT ONLY.
DO NOT WELD TO SUSPENSION ARM ITEM 56.

CONFIDENTIAL

© COPYRIGHT 2001 HARSCO TRACK TECHNOLOGIES. THIS DRAWING OR DOCUMENT IS THE PROPERTY OF HARSCO TRACK TECHNOLOGIES AND EMBODIES CONFIDENTIAL INFORMATION, TRADE SECRET INFORMATION, AND OR KNOW-HOW THAT IS THE PROPERTY OF HARSCO TRACK TECHNOLOGIES. BY ACCEPTING THIS DRAWING OR DOCUMENT, THE RECIPIENT AGREES (1) NOT TO PROVIDE, OR OTHERWISE MAKE AVAILABLE, THE DRAWING OR DOCUMENT, OR ANY INFORMATION OR KNOW-HOW EMBODIED THEREIN, TO ANY THIRD PARTY AND (2) NOT TO REPRODUCE OR USE THE DRAWING OR DOCUMENT TO MANUFACTURE ANY APPARATUS OR DEVICE, WITHOUT THE PRIOR WRITTEN AUTHORIZATION OF HARSCO TRACK TECHNOLOGIES.

SOLID EDGE DRAWING

IMPLIED TOLERANCES
ALL DIMENSIONS ARE IN INCHES — NO RANGE DIMENSIONS OTHERWISE SPECIFIED

INCH				METRIC			
DECIMAL PLACES				DECIMAL PLACES			
ONE	TWO	THREE	FOUR	ONE	TWO	THREE	FOUR
± 0.5	± 0.25	± 0.125	± 0.062	± 0.5	± 0.25	± 0.125	± 0.062
± 1	± 0.5	± 0.25	± 0.125	± 1	± 0.5	± 0.25	± 0.125
± 2	± 1	± 0.5	± 0.25	± 2	± 1	± 0.5	± 0.25

UNLESS OTHERWISE SPECIFIED ALL MACHINED SURFACES WILL HAVE A 125 MICRO-INCHES ANGULAR TOLERANCE OF ± 30' (MACHINISTS HANDBOOK)

DIMENSIONS ARE FOR FINISHED PARTS

CHANGE	R/L	REVISION	DATE
100464	A	RELEASE	4-17-06
100716	B	CORRECTED ITEMS 40, 41 AND 42 HH/DES/APD	8-21-06

Description: AXLE & DRIVE, NON-INS 20 MPH
Drawing Number: ----------
Machine Type: NS TR10 2006 (5)
Model: 4011557.asm
Drawn: hhill — Date Drawn: 4-17-06
Weight: 2411.502 lbm — Scale: — WWD Eng: DES — WWD Dwg: APD
Mat'l:

ITT
Harsco Track Technologies
Harsco
Columbia, SC

Part Number: 4011557 — Size: D — Sheet: 1 of 1

Plotted by hhill on 8/21/2006 4011557.dft

SECTION C-1A

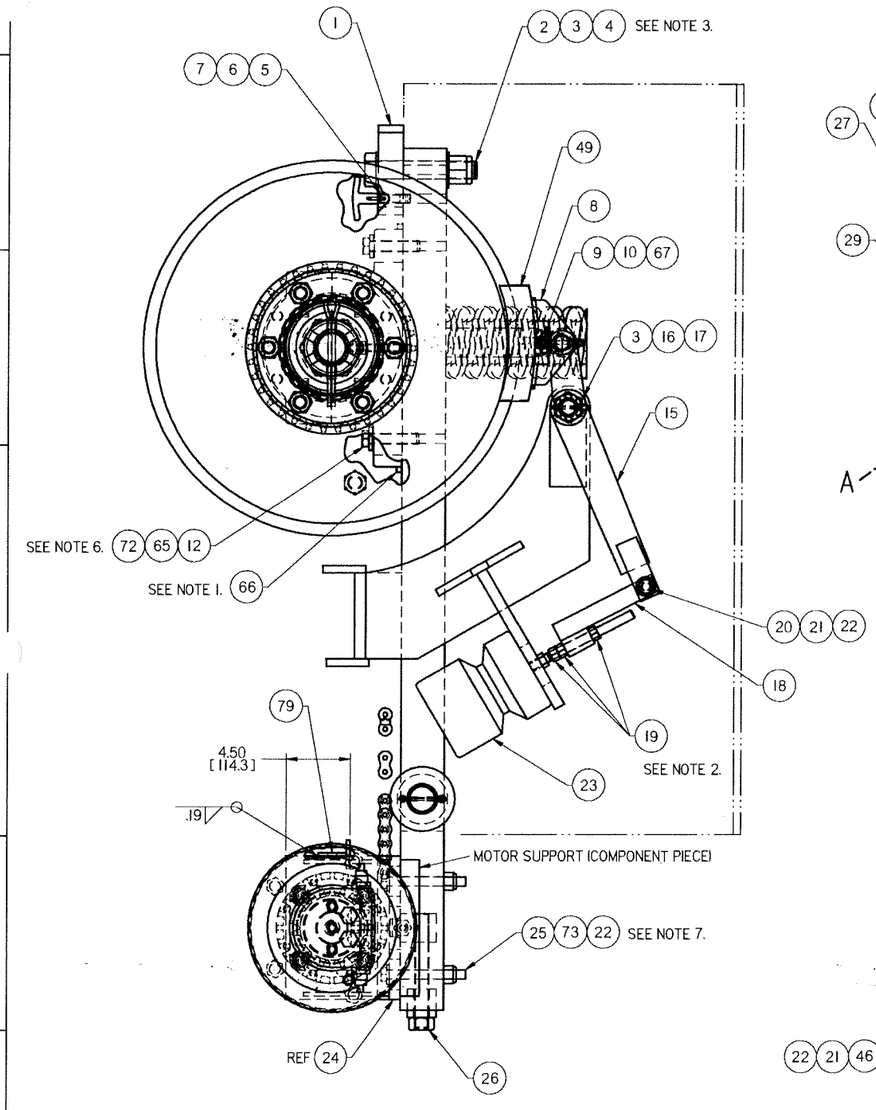

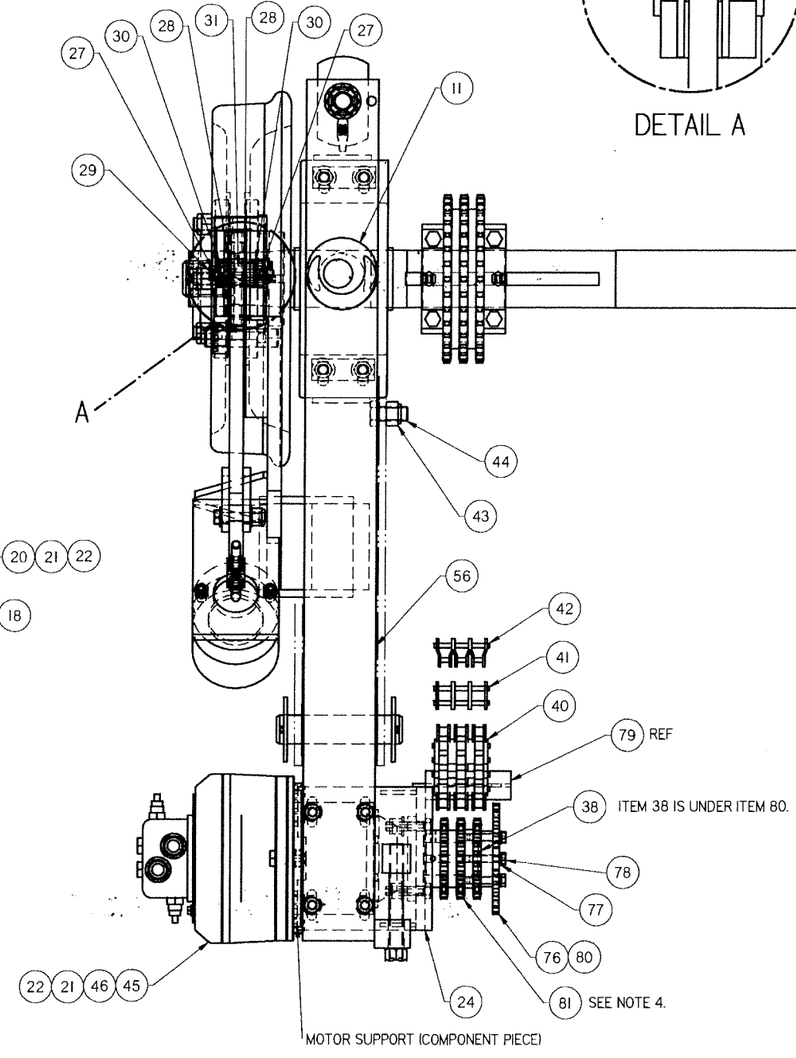

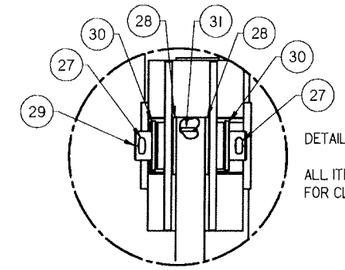

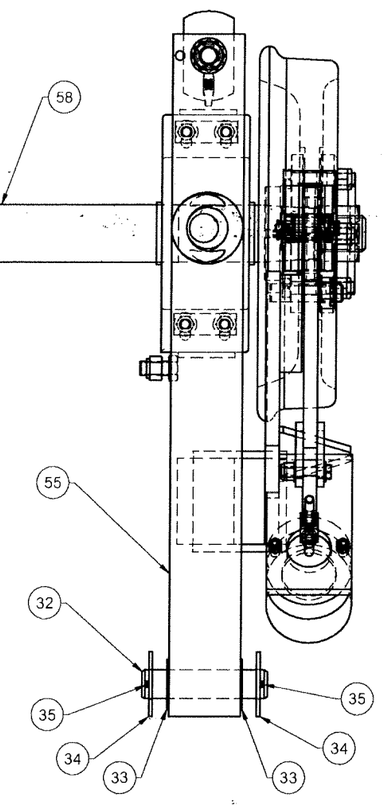

Item Number	Part Number	Description	Quantity
1	A1153Y01	LOCK	2
2	A0036288	HHCS 1 1/4-7 X 7	2
3	A0060022	1 1/4 SAE FLAT WASHER	8
4	0-3011001-0-41	1 1/4-7 ESNA NUT	2
5	Z765178-001	SPRING	2
6	0-1200117-0-05	TEE HANDLE	2
7	A1155Y01	PIN	2
8	0-2304737-0-01	BRAKE SHOE HEAD	2
9	0-2408126-0-01	PIN	2
10	A0068013	COTTER PIN, 1/8 DIA X 1"	2
11	0-3641007-0-01	SPRING, COMPRESSION	2
12	A0036224	3/4-10 X 3 1/2 HHCS	8
15	A4467Y01	LEVER	2
16	A0057013	SLOTTED HEX NUT, 1 1/4-7	2
17	A0068030	COTTER PIN 1/4 X 2	2
18	A4457YAA	LINK ASSY	2
19	A0055021	5/8-18 HEX NUT	6
20	A0036183	HHCS 5/8-11 X 3 1/4	2
21	A0059007	5/8 FLAT WASHER	8
22	L40006	ESNA NUT 5/8-11	10
23	0-3551007-0-01	CHAMBER	2
24	4011567	MOTOR MOUNT ASSY	1
25	A0036189	5/8-11 X 5 1/2 HHCS	4
26	A0150YAA	ROD, MOTOR ADJUST	1
27	A0068029	1/4 X 1 1/2 COTTER PIN	4
28	Z63081-01	INSULATING WASHER	4
29	Y691328-033	PIN	2
30	0-3019004-0-14	WASHER	4
31	Z754560-001	INSULATING BUSHING	2
32	D7735Y01	PIN	2
33	A0160Y01	SPACER	8
34	A0059014	2 FLAT WASHER	4
35	A0068032	COTTER PIN 1/4 X 2 1/2	4
38	A0060015	1/2 SAE WSHR	1
40	0-3621027-0-02	TRIPLE ROLLER CHAIN ASA 80-3	10
41	0-3621028-0-02	CONNECTING LINK ASA 80-3	1
42	0-3621029-0-01	OFFSET LINK ASA 80-3	1
43	L41149	1-8 ESNA NUT	2
44	A0036254	1-8 x 2 HHCS	2
45	0-3324000-0-11	HYDRAULIC MOTOR ASSEMBLY	1
46	A0036181	5/8-11 X 2 3/4 HHCS	4
49	A1101Y01	COBRA SHOE REWORK	2
55	0-2101975-0-02	SUSP & BRAKE BRKT	1
56	0-2101976-0-02	SUSP, BRAKE & MOTOR BRKT	1
58	B8441WAD	AXLE ASSY, NON-INS	1
65	A0179Y02	BAR, LOCK	4
66	Z9669E	KEY	4
67	C1580T32	STL TUBE	2
72	0-3019002-0-07	3/4 HARDENED FL WASHER	8
73	0-3019002-0-06	5/8 HARDENED FL WSH	4
76	D9810Y06	SPROCKET, SPEEDO	1
77	F001075	1/2 MED LOK WASHER	3
78	A0036156	1/2-20 X 2 1/4 HHCS	3
79	H7163YAA	BRKT, PROX. SWITCH	1
80	H7184Y01	SPACER	1
81	0-1306442-0-04	SPROCKET, DRIVE (20-MPH)	1

ASSEMBLY NOTES:

1. AFTER PROPER ALINEMENT OF AXLE, PILLOW BLOCK AND SUSPENSION BAR. LOCATE AND WELD KEYS ITEM 66 ON 3 SIDES TO ITEMS 55 AND 56.
2. ADJUST BRAKE SHOES TO 1/8" MAXIMUM WHEEL CLEARANCE.
3. TIGHTEN ESNA NUT ITEM 4 TO WHERE LOCK ITEM 1 CAN STILL BE TURNED BY HAND.
4. ASSEMBLE WITH ANTI-SEIZE COMPOUND L422137 ON HYDRAULIC MOTOR SHAFT AND BORE OF SPROCKET.
6. INSTALL ITEM 72 UNDER ITEMS 12 AND 65. TORQUE ITEM 12 TO 200 FT-LBS. AND BEND THE CORNERS OF ITEMS 65 OVER TO CONTACT A FLAT ON BOLT HEAD.
7. TORQUE ITEM 25 TO 110 FT-LBS.

REFERENCE TO MOUNTING ITEM 45 HYDRAULIC MOTOR.

REAR PART OF ITEM 24 MOTOR MOUNT ASSEMBLY IS ONLY TACK WELDED TO BRACKET. BREAK LOOSE FROM MOUNT.
REMOVE TOP MOST NUT FROM HYDRAULIC MOTOR BOLT AND REPLACE WITH BRACKET COMPONENT.
USE REMOVABLE LOC-TITE AND TORQUE TO 50 FT-LBS.
USE SHIM MATERIAL UNDER SUPPORT TO MINIMIZE DRAW WHEN WELDING. WELD ENDS OF BOLT ON SUPPORT TO MOTOR MOUNT ONLY.
DO NOT WELD TO SUSPENSION ARM ITEM 56.

CONFIDENTIAL
© COPYRIGHT 2001 HARSCO TRACK TECHNOLOGIES. THIS DRAWING OR DOCUMENT IS THE PROPERTY OF HARSCO TRACK TECHNOLOGIES AND EMBODIES CONFIDENTIAL INFORMATION, TRADE SECRET INFORMATION, AND OR KNOW HOW THAT IS THE PROPERTY OF HARSCO TRACK TECHNOLOGIES. BY ACCEPTING THIS DRAWING OR DOCUMENT, THE RECIPIENT AGREES (1) NOT TO PROVIDE, OR OTHERWISE MAKE AVAILABLE, THE DRAWING OR DOCUMENT, OR ANY INFORMATION OR KNOW HOW EMBODIED THEREIN, TO ANY THIRD PARTY AND (2) NOT TO REPRODUCE OR USE THE DRAWING OR DOCUMENT TO MANUFACTURE ANY APPARATUS OR DEVICE, WITHOUT THE PRIOR WRITTEN AUTHORIZATION OF HARSCO TRACK TECHNOLOGIES.

SOLID EDGE DRAWING

IMPLIED TOLERANCES
ALL DIMENSIONS ENTERED IN INCHES TO TRANSFER TO METRIC UNLESS OTHERWISE SPECIFIED

INCH				METRIC			
DECIMAL		FRACTIONAL	DIMENSION	DECIMAL		FRACTIONAL	DIMENSION
.0625	1/16	1/64	0.016	2	1/10	1	0.03
.3	1/8	1/32	0.031	3	1/10	1	0.03
.5	1/2	1/16	0.063	13	1/2	1/2	0.5
.75	3/4	1/8	0.125	20	1/2	1/2	0.5

UNLESS OTHERWISE SPECIFIED ALL MACHINED SURFACES WILL HAVE
ALLOWANCE FOR STOCK REMOVAL
ANGULAR TOLERANCE ±1/2°
LENGTH WIDTH HEIGHT

TRUE POSITION

DESIGN TO HARSCO SPECIFICATIONS
FINISH: TRUE POSITION, CLEAN, DEBURRED, WELD INSPECTION PER

CHANGE	R/L	REVISION	DATE
100464	A	RELEASE	4-17-06
100716	B	CORRECTED ITEMS 40, 41 AND 42. HH/DES/APD	8-21-06

Description: AXLE & DRIVE, NON-INS 20 MPH/S
Drawing Number: ----------
Machine Type: NS TR10 2006 (5)
Model: 4011558.asm
Drawn: hhill
Date Drawn: 4-17-06
Weight: 2420.393 lbm
Appr. Eng: DES
Appr. Dftg: APD
Mat'l:

HTT
Harsco Track Technologies
Harsco
Columbia, SC

Part Number: 4011558
Size: D
Sheet: 1 of 1

Plotted by hhill on 8/21/2006 4011558.dft

PARTS LIST

ITEM NO	PART NUMBER	LEG	DESCRIPTION (30)	AA	AB	AC	AD	AE	AF	AG	AH	AJ	AK	AL
				QUANTITY										
1	A7299Y06		HOUSING ASSY	2	0	2	2	2	2	2	2	2	2	2
2	A7299Y07		BEARING	2	0	2	2	2	2	2	2	2	2	2
3	A7299Y08		ADAPTER ASS'Y	2	0	2	2	2	2	2	2	2	2	2
4	A7299Y09		SEAL 3 15/16	2	0	2	2	2	2	2	2	2	2	2
5	A7299Y11		STABILIZING RING (COMES WITH ITEM NO. 1)	REF	0	REF	REF	REF	REF	REF	REF	REF	REF	REF
6	Z753210-085		KEY	1	0	1	1	1	1	1	1	1	0	0
7	A0063023		SQ. HD. SET SCREW 1/2-13X2 1/2	2	0	2	2	2	2	2	2	2	0	0
8	A0056008		JAM NUT 1/2-13	2	0	2	2	2	2	2	2	2	0	0
9	A0071148		WOODRUFF KEY	2	0	2	2	2	2	2	2	2	2	2
10	Z681243		WHEEL FLANGE	2	0	2	2	2	2	2	0	2	2	2
11	A0036251		HEX HD. BOLT 7/8-14x4 1/2	12	0	12	12	12	12	0	12	12	12	12
12	L40944		LOCK NUT, 7/8-14	12	0	12	12	12	12	12	12	12	12	12
13	A0059037		FLAT WASHER 2 1/2	4	0	4	4	4	4	4	4	4	4	4
14	A0057018		2 1/2-4 SLOTTED HEX NUT	2	0	2	2	2	2	2	2	2	2	2
15	A0068057		1/2 DIAx6 COTTER PIN	2	0	2	2	2	2	2	2	2	2	2
16	W68303		WHEEL (20 IN.)	2	0	0	0	0	0	0	0	0	0	0
17	Z765296-002		WHEEL STRIP	2	0	0	2	2	2	0	0	0	0	2
18	Z765295-002		WHEEL BOLT BUSHING	12	0	0	12	12	12	0	0	0	0	12
19	Y68309-B1		WHEEL INSULATING RING (ST.)	8	0	0	8	8	8	0	0	0	0	8
20	A0036226		HEX HD. CAPSCREW, 3/4-10x4	0	4	0	0	0	0	0	0	0	0	0
21	A0060018		SAE FLAT WASHER, 3/4	0	8	0	0	0	0	0	0	0	0	0
22	L41003		LOCKNUT, 3/4-10	0	8	0	0	0	0	0	0	0	0	0
23	L41247		BEVEL WASHER, 3/4"	0	4	0	0	0	0	0	0	0	0	0
24	0-3093200-0-05		SQUARE BAR	0	4	0	0	0	0	0	0	0	0	0
25	A0036236		HEX HEAD CAPSCREW 3/4-10x4 3/4	0	4	0	0	0	0	0	0	0	0	0
26	0-3625040-0-03		SPLIT SPROCKET	1	0	0	0	0	0	0	0	0	0	0
27	B8596W01		AXLE	1	0	1	1	0	0	1	1	0	1	1
28	B8595X01		HUB	2	0	2	2	2	2	2	2	2	2	2
29	W750980		WHEEL (24 IN)	0	0	2	2	2	2	0	0	2	2	2
30	Z765296-001		WHEEL STRIP	0	0	2	0	0	0	2	2	2	2	0
31	Z765295-001		WHEEL BOLT BUSHING	0	0	12	0	0	0	12	12	12	12	0
32	Y68309		WHEEL INSULATING RING	0	0	8	0	0	0	8	8	8	8	0
33	A7299Y10		SEAL 4"	2	0	2	2	2	2	2	2	2	2	2

ASSEMBLY IDENTIFIER

ENG DWG NO: B8441W

SHEET: 1 CONT ON: 2

DESCRIPTION (30): AXLE ASS'Y (4")

DRAWN: B. Kong DATE: 9/14/89 CHECKED: [illegible]

REVISIONS

NO	DER	DESCRIPTION	DR	CK	APP	MF
1	4974	RELEASE, PRELIMINARY				
2	4974.9	IT# 5 WAS A7299Y10; IT# 4 QTY WAS 2 ON TAB AA	B.N.	[illegible]	[illegible]	
3	4974.13	ADDED IT# 26	B.N.	[illegible]		
4	4974.17	ADDED IT. NO'S. 27 & 28, RELEASE	B.B.	[illegible]	[illegible]	
5	4974.27	QUANTITY ITEM 28 WAS 1	B.B.	[illegible]	[illegible]	
6	5178.1	QTY IT 4 TAB AA WAS 4, ADDED TABS AC-AF, ADDED ITEMS 29-33	KBD	[illegible]	[illegible]	
7	5178.3	ON TABS AC-AF ITEM 26 QTY WAS 1	KBD			
8	5215.2	TAB "A G" ADDED	JCW		[illegible]	
9	6056.1	IT. 5 AA, AC-AH QTY. WAS 1.	HH			
10	6326.1	IT. 9 WAS A0071110.	WAC	[illegible]		

SHEET 2 CONT ON

ENG DWG NO B8441

ASSEMBLY DESCRIPTION

DATE	4974	5178.1	5178.1	5178.1	5178.1	5215.2	5178.6	7/81 .3	11778 .4	11778 .12
DR		KBD	KBD	KBD	KBD	JCW	KBD	fa	WJ	HH 10-14-92
CK	[illegible]	[illegible]	[illegible]	[illegible]	[illegible]	[illegible]	[illegible]	[illegible]	[illegible]	[illegible]
APP		[illegible]	[illegible]	[illegible]	[illegible]		[illegible] 5-7-92	[illegible] 11-17-92	[illegible] 9-23-92	[illegible]
MF										

DATE	4974	5178.1	5178.1	5178.1	5178.1	5215.2	5178.6	7/81 .3	11778 .4	11778 .12	
DR		KBD	KBD	KBD	KBD	JCW	KBD	fa	WJ	HH 10-14-92	
CK	[illegible]	[illegible]	[illegible]	[illegible]	[illegible]	[illegible]	[illegible]	[illegible]	[illegible]	[illegible]	
APP		[illegible]	[illegible]	[illegible]	[illegible]		[illegible] 5-7-92	[illegible] 11-17-92	[illegible] 9-23-92	[illegible]	
MF											

3 15/16 JRM/STM INSTALLATION
JRM/STM 3 15/16 DIA SUB-ASSEMBLY
TRIO INSULATED 5 1/2 GA
TRIO NON-INSULATED 5 1/2 GA
TRIO NON-INSULATED 6 3 GA
TRIO NON-INSULATED 3 9/8 GA
TR-10 DUAL GAUGE 6 3/4 & 10 6 3
TR-10 AXLE FELD KIT 5 1/2
TR-10 INSULATED 42 IN. GA
PLATE PLACER
56 1/2" GA. NON-INSUL. WITHOUT SPROCKET
FAIRMONT

DATE: 9/15/89

SCANNED

REVISION ____ OF THIS DRAWING HAS BEEN SCANNED INTO THE CAD/CAM DATA BASE.

INITIALS: [illegible] DATE: 5/5/90

Tamper

Div. Canron Corp.
2401 Edmund Road
West Columbia
South Carolina 29169
Tel. (803) 794-9160
Telex 573423

ENGS.-7

PARTS LIST

FIG	ITEM NO	PART NUMBER	DESCRIPTION (29)	AA	AB	AC	AD	AE	AF	AG	AH	AJ	AK	AL
				ASSEMBLY IDENTIFIER										
				QUANTITY										
34		B8596W02	AXLE	0	0	0	0	1	0	0	0	0	0	0
35		B8596W03	AXLE	0	0	0	0	0	1	0	0	0	0	0
36		C0101Y01	RING	0	0	1	1	1	1	1	1	1	1	1
37		0-3625040-0-04	SPLIT SPROCKET	0	0	1	1	1	1	1	1	1	0	0
38		B6033W02	WHEEL SPACER	0	0	0	0	0	0	2	0	0	0	0
39		C0393W01	2" DIA. ALL STEEL WHEEL	0	0	0	0	0	0	2	0	0	0	0
40		TZ767816-019	HEX HD CAP SCR 7/8-14 x 8" LG.	0	0	0	0	0	0	12	0	0	0	0
41		B8596W04	AXLE	0	0	0	0	0	0	0	0	1	0	0

ENG DWG NO: B8441W

SHEET: 2

CONT ON: ~

DESCRIPTION (30): AXLE ASSY (4")

DRAWN: K. DUNN

DATE: 3/22/90

CHECKED

DATE

APP: A. Williams

DATE: 3/21/90

APP

DATE

	31 5/16 INSTALLATION JRM/STM 31 5/16 DIA SUB. ASSY	31 5/16 INSTALLATION JRM/STM	TRIO 56 1/2 GA NON-INSULATED 56 1/2 GA	TRIO 63 GA NON-INSULATED	TRIO 39 3/8 GA NON-INSULATED	TRIO DUALGAUGE (56 1/2 TO 63) INSULATED	TR-10 AXLE FIELD KIT 56 1/2	TR-10 42 IN. GA INSULATED	56 1/2" GA. NON-INSUL WITHOUT FAIRMONT PLATE PLACER
ER	4914	5178.1	5175.1	5178.1	5175.1	5215.2	5118.6	7181.3	11778 12
DR	KRD	KRD	KRD	KRD	KRD	JCW	KRD		VJV HH 10-14-89
CK									
APP									
MF									

ASSEMBLY DESCRIPTION

REVISIONS

NO	ER	DESCRIPTION	DR	CK	APP	MF
6	5178.1	ADDED SHEET 2				
7	5178.3	ADDED ITEM 37	KRD			
8	5215.2	TAB "AG" ADDED	JCW		JMJ	
10		NO CHG				

SHEET: 2

CONT ON: ~

ENG DWG NO: B8441W

SCANNED

REVISION ____ OF THIS DRAWING HAS BEEN SCANNED INTO THE CAD/CAM DATA BASE.

INITIALS: DMC

DATE: 5/15/92

Tamper

TAMPER CORP.
2401 Edmund Road-Box 20
Cayce-West Columbia
South Carolina 29171-0020
Tel. (803) 794-1160

LNGS-34

© American Blueprint Co. 314879

DWG. NO. B8441W

NOTE: 6) FOLLOW SHT. 3 OF INSTRUCTION MANUAL SUPPLIED IN WITH BEARING. PARTICULARLY ITEMS NO. 1, 2 AND 3a THRU 3c. IMPORTANTLY, WHILE TIGHTENING BEARING, USE NUT ON END OF AXLE TO PROTECT THREADS AND OCCATIONALLY STRIKE END OF AXLE WITH PLASTIC HAMMER TO HELP SEAT BEARINGS.

REVISIONS

NO	BY	DESCRIPTION				
4		RELEASE				
5		ADDED NOTE 4	G-2			
6		ADDED ITEMS 29-36, ADDED ASSY'S AC-AF & TABLE				
7		ADDED ITEM 37	C2			
8		ITEMS 33,39,40 ADDED; B8441WAG ADDED	B-1			
9		UPDATED NOTES 1, 4 AND 5 UPDATED PICTORIAL, ADDED NOTE 6	G-2 C-4			
10		NO CHANGE				

SECTION C-2

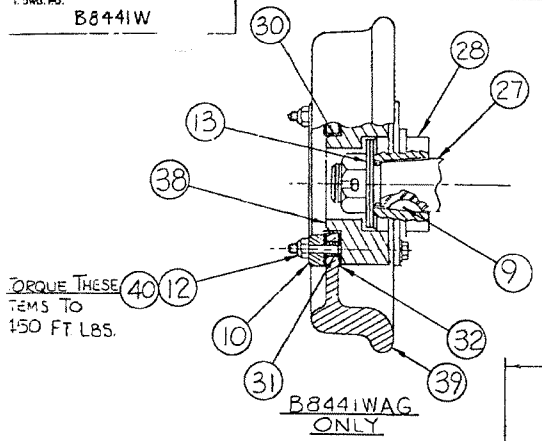

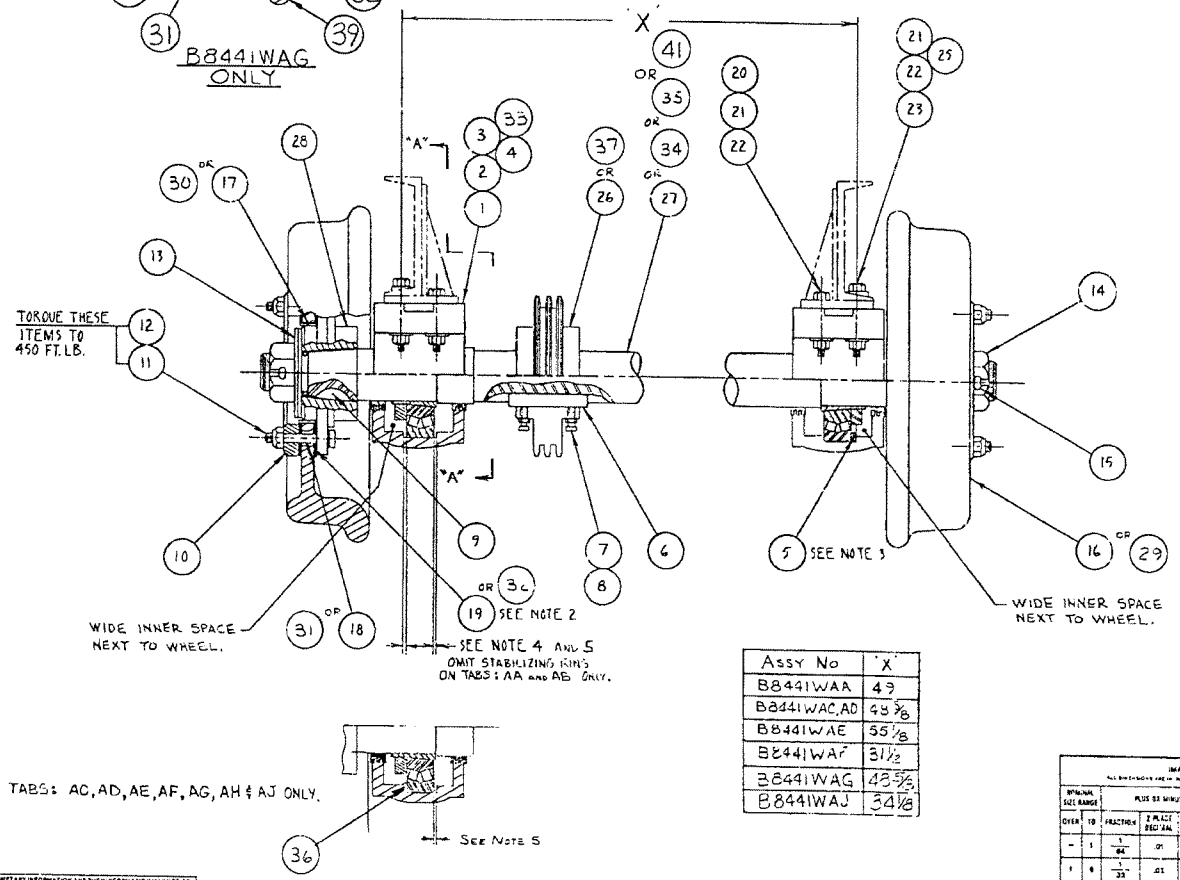

NOTES: 1) WHEN INSTALLING ITEM NO. 2 THE INTERNAL CLEARANCE SHOULD BE PER SPECS. SUPPLIED WITH EACH BEARING AND NOTED ON BEARINGS OUTER RACE USING MAGIC MARKER. WHEN MOUNTED THE BEARINGS INTERNAL CLEARANCE SHOULD BE ADJUSTED AS FOLLOWS:

TIGHTEN NUT UNTIL CLEARANCE IS REDUCED BY .003 EXAMPLE:

UNMOUNTED CLEARANCE	TIGHTEN DOWN	MOUNTED CLEARANCE
.007	.003	.004

2) USE INSULATING RINGS (IT. 19 OR 32) AS REQUIRED TO OBTAIN PROPER GAUGE.

3) ITEM NO. 5 TO BE INSTALLED IN ONE BEARING ASSY. ONLY

4) BEARING TO BE CENTERED IN HOUSING, I.E. EQUAL GAPS ON EITHER SIDE OF BEARING. ON TABS: AA AND AB ONLY.

5) INSTALL ITEM 36 AS SHOWN TO OBTAIN 3/16 CLEARANCE ON TABS AC, AD, AE, AF, AG, AH AND AJ ONLY.

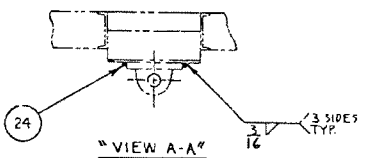

Assy No	'X'
B8441WAA	49
B8441WAC, AD	49 3/8
B8441WAE	55 1/8
B8441WAF	31 1/2
B8441WAG	43 5/8
B8441WAJ	34 1/8

TABS: AC, AD, AE, AF, AG, AH & AJ ONLY.

FIG NO	ITEM NO	PART NUMBER	DESCRIPTION AND MATERIAL SIZE (REF. ONLY)	QTY
			SEE SEPARATE PARTS LIST	

IMPLIED TOLERANCES

NOMINAL SIZE RANGE OVER	TO	PLUS OR MINUS FRACTION	2 PLACE DECIMAL	3 PLACE DECIMAL	NOMINAL SIZE RANGE OVER	TO	PLUS OR MINUS FRACTION	2 PLACE DECIMAL	3 PLACE DECIMAL
–	1	1/64	.01	.005	6	24	3/64	.03	.010
1	6	1/32	.02	.005	24	–	1/16	.05	.010

ANGULAR THEMISHES PLUS OR MINUS 1 DEGREE

ALL MACHINED SURFACES TO HAVE A SURFACE FINISH OF 125 MICROINCHES UNLESS OTHERWISE SPECIFIED

DO NOT SCALE

SEE SINGLE INSPECTION

DESCRIPTION (36): AXLE ASSY.

DRAWN 10-11-88 DATE 10/5/89

MACHINE TYPE: JRM, STM, TRIO

CHECKED DATE

APP ENG DATE

APP MFG DATE

TAMPER CORP.

Tamper

SHEET 1 OF 1

END. DWG. NO. B8441W

THIS DOCUMENT CONTAINS PROPRIETARY INFORMATION AND SUCH INFORMATION MAY NOT BE DISCLOSED TO OTHERS FOR ANY PURPOSE OR USED FOR MANUFACTURING PURPOSES WITHOUT THE WRITTEN PERMISSION OF TAMPER.

128-372

SECTION CO

DRIVE TRAIN COMPONENTS OPTIONS

ENG.DWG.NO.
D8484WAD

REVISIONS							
NO	ER	DESCRIPTION	ZONE	DR	CK	APP	MF
A	13080.6	NEW RELEASE		HH			
B	13144.8	ADDED BOXED IN DIMENSIONS. 10-18-05	ALL	HH	DES	APD	

SECTION CO-0905

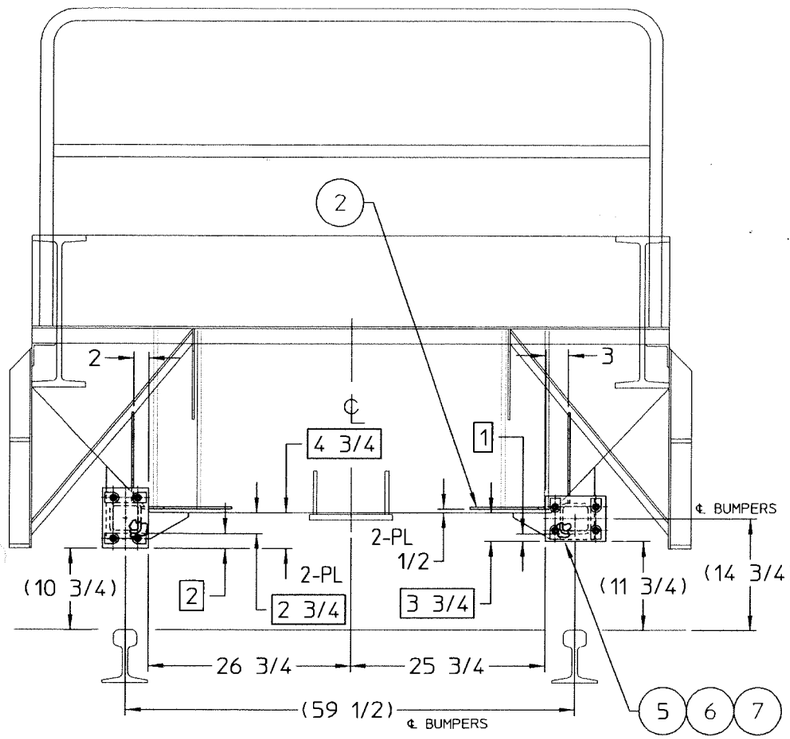

REAR

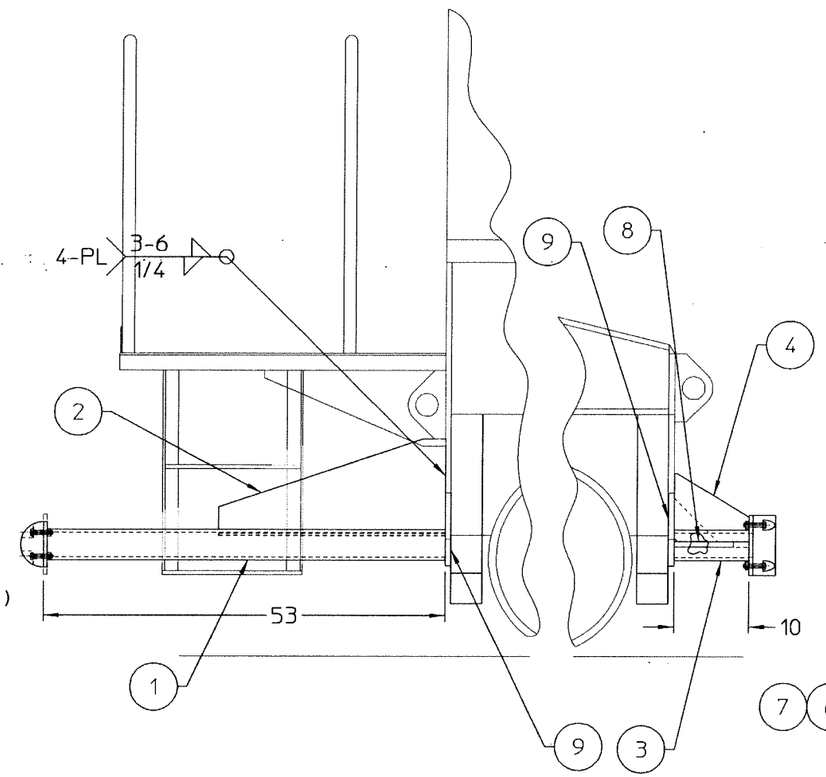

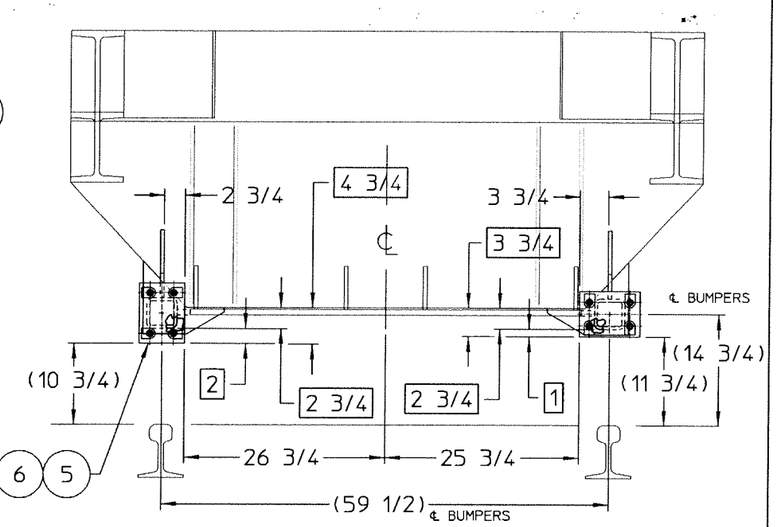

FRONT

W ASSY
X 10

NOTE:

1. WELD 3/8 FILLET ALL AROUND UNLESS SPECIFIED.
2. BOXED IN DIMENSIONS ARE TO AID ASSEMBLER.

MAIN REFERENCE PLAIN IS BOTTOM OF FRAME END PLATE.

FIG NO.	ITEM NO.	PART NUMBER	DESCRIPTION AND MATERIAL SIZE (REF.ONLY)	QTY
	9	G3508Y01	BUMPER FRAME EXT PL	4
	8	G3508Y04	BUMPER FRAME EXT PL	2
	7	A0055016	1/2-13 HEX NUT	16
	6	A0036127	1/2-13 X 2 1/2 HHDCPSCR	16
	5	D5896Y01	RUBBER TRUCK BUMPER	4
	4	D8513T45	GUSSET 1/2 THICK	2
	3	D8541XAF	BUMPER SUPPORT	2
	2	A0217T56	GUSSET 1/4 THICK	4
	1	D8541XAE	BUMPER SUPPORT	2

IMPLIED TOLERANCES
ALL DIMENSIONS ARE IN INCHES-TOLERANCE UNLESS OTHERWISE SPECIFIED

NOMINAL SIZE RANGE		PLUS OR MINUS			NOMINAL SIZE RANGE		PLUS OR MINUS		
OVER	TO	FRACTION	2 PLACE DECIMAL	3 PLACE DECIMAL	OVER	TO	FRACTION	2 PLACE DECIMAL	3 PLACE DECIMAL
-	1	1/64	.01	.003	6	24	3/64	.03	.008
1	6	1/32	.02	.005	24	-	1/16	.05	.010

ANGULAR DIMENSIONS PLUS OR MINUS 1 DEGREE

√ ALL MACHINED SURFACES TO HAVE A SURFACE FINISH OF 125 MICROINCHES UNLESS OTHERWISE SPECIFIED.

WELDING SPECIFICATION

UNLESS OTHERWISE SPECIFIED ALL WELDS SHOULD ADHERE TO FAIRMONT TAMPER WELDING SPECIFICATION NO. 101

WEIGHT lbs.

3rd ANGLE PROJECTION

DO NOT SCALE

SHEET 1 CONT. — ON —

DESCRIPTION (24)
FR & REAR BUMPER INSTL.

DRAWN HH	DATE 9-1-04	MACHINE TYPE TR10 (NS 2004)	
CHECKED DEB	DATE 9-1-04	Fairmont Tamper™ 2401 Edmund Road-Box 20 Cayce-West Columbia, South Carolina 29171-0020 (803) 822-9460	
APP-ENG APD	DATE 9-1-04		
APP-MFG	DATE		
LAST ECR. 13144 .8	CHECKED dvan DATE 27-Oct-05	ENG.DWG.NO. D8484WAD	

THIS DOCUMENT CONTAINS PROPRIETARY INFORMATION AND SUCH INFORMATION MAY NOT BE DISCLOSED TO OTHERS FOR ANY PURPOSE OR USED FOR MANUFACTURING PURPOSES WITHOUT THE WRITTEN PERMISSION OF FAIRMONT TAMPER.

ENG DWG. NO
C58 X

REVISIONS							
NO.	ER	DESCRIPTION	ZONE	DR	CK	APP	MF
1	5769,4	REL					

SECTION CO-0908

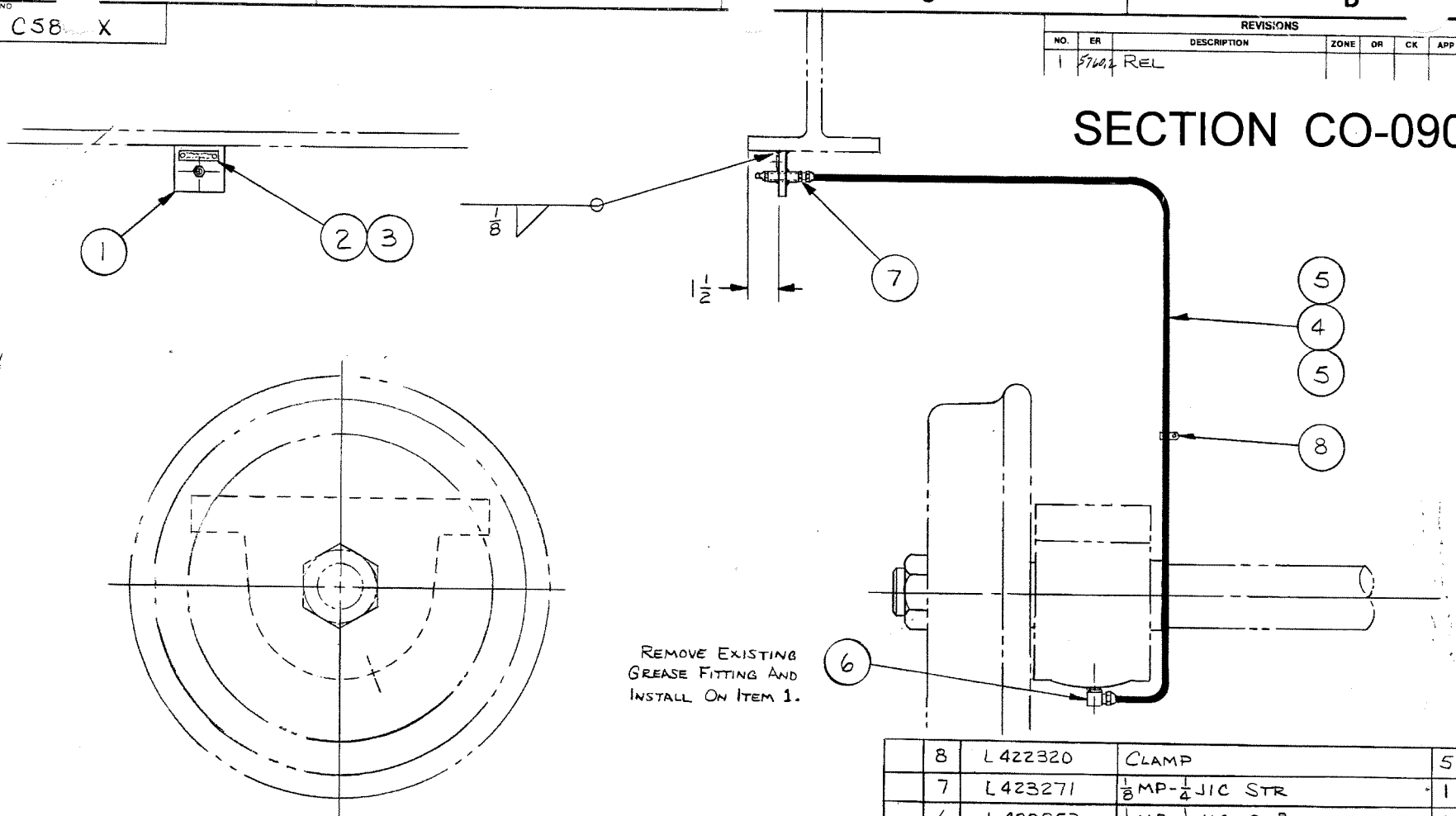

FIG NO.	ITEM NO.	PART NUMBER	DESCRIPTION AND MATERIAL SIZE (REF ONLY)	QTY
	8	L422320	CLAMP	5
	7	L423271	1/8 MP-1/4 JIC STR	1
	6	L420853	1/8 MP-1/4 JIC 90°	1
	5	0-3304135-0-01	1/4 JIC HOSE END	2
	4	L423104	3/16 MP HOSE (FT)	5
	3	A0071070	DRIVE SCREW #2 x 3/16	2
	2	A1434Y07	NAMEPLATE	1
	1	C5809YAA	FITTING MOUNT	1

IMPLIED TOLERANCES
ALL DIMENSIONS ARE IN INCHES - TOLERANCE UNLESS OTHERWISE SPECIFIED

NOMINAL SIZE RANGE		PLUS OR MINUS			NOMINAL SIZE RANGE		PLUS OR MINUS		
OVER	TO	FRACTION	2 PLACE DECIMAL	3 PLACE DECIMAL	OVER	TO	FRACTION	2 PLACE DECIMAL	3 PLACE DECIMAL
–	1	1/64	.01	.003	6	24	3/64	.03	.008
1	6	1/32	.02	.005	24	–	1/16	.05	.010

ANGULAR DIMENSIONS PLUS OR MINUS 1 DEGREE

√ ALL MACHINED SURFACES TO HAVE A SURFACE FINISH OF 125 MICROINCHES UNLESS OTHERWISE SPECIFIED.

WEIGHT lbs.

3rd ANGLE PROJECTION

DO NOT SCALE

LAST ITEM NO USED

DESCRIPTION (30): REMOTE LUBE POINT-AXLE

DRAWN K. DUNN	DATE 8-29-91	MACHINE TYPE TR10
CHECKED	DATE 8-30-91	
APP-ENG	DATE 8-30-91	
APP-MFG	DATE	

TAMPER CORP.
2401 Edmund Road-Box 20
Cayce-West Columbia
South Carolina 29171-0020
Tel: (803) 794-9190

SHEET 1 CONT. ON ~

ENG. DWG. NO. C5808X

THIS DOCUMENT CONTAINS PROPRIETARY INFORMATION AND SUCH INFORMATION MAY NOT BE DISCLOSED TO OTHERS FOR ANY PURPOSE OR USED FOR MANUFACTURING PURPOSES WITHOUT THE WRITTEN PERMISSION OF TAMPER

ENGS-31A

ENG.DWG.NO. 4007

REVISIONS						
NO	ER	DESCRIPTION	DR	CK	APP	MF
A	13080.6	NEW RELEASE	HH			

SECTION CO-0909

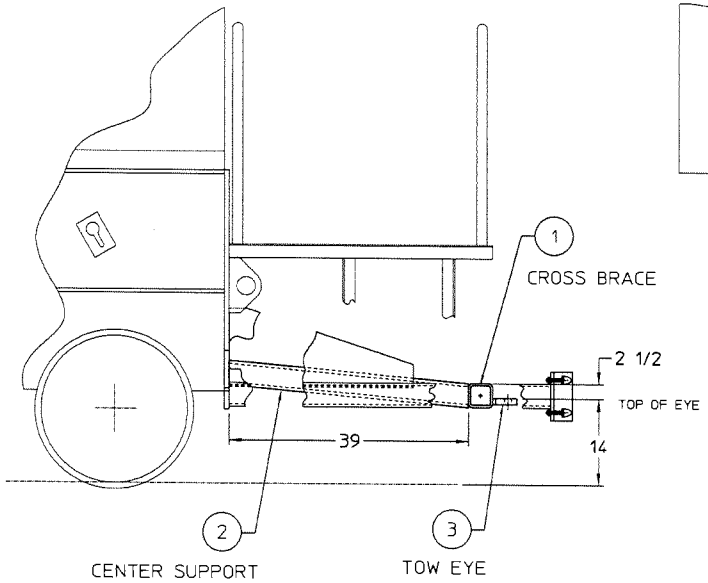

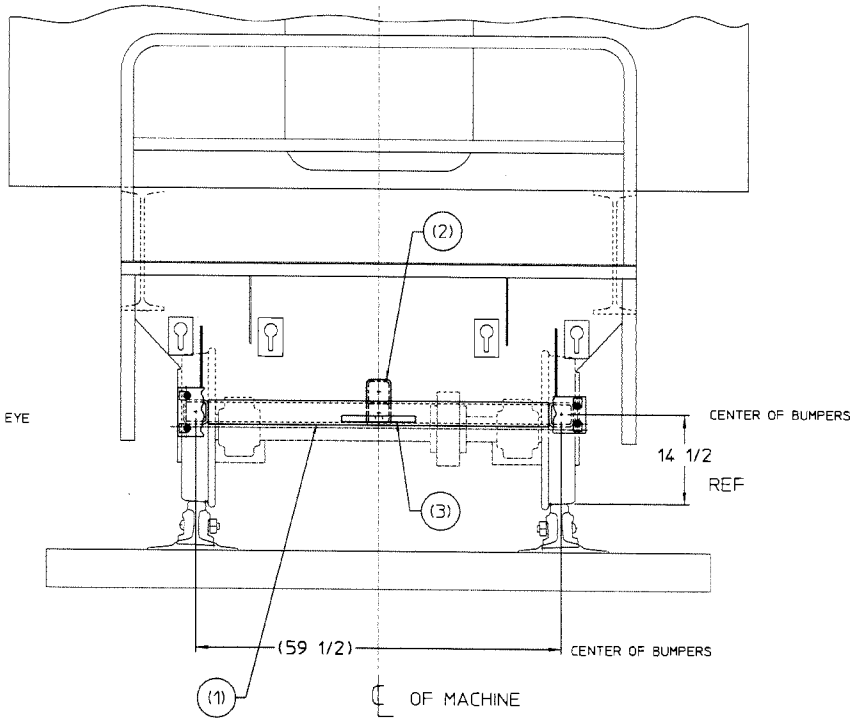

W-ASSY X10

NOTES:

1. BUMPERS CUT AWAY FOR CLARITY (HITCH EXT. IS LOCATED BETWEEN REAR BUMPERS REF: D8484WAD)

2. WELDS TO BE 3/8 FILLET ALL AROUND WHERE POSSIBLE.

FIG NO.	ITEM NO.	PART NUMBER	DESCRIPTION AND MATERIAL SIZE (REF.ONLY)	QTY
	3	4004363	TOW EYE	1
	2	4007251	CENTER SUPPORT	1
	1	4007252	CROSS BRACE	1

IMPLIED TOLERANCES
ALL DIMENSIONS ARE IN INCHES-TOLERANCE UNLESS OTHERWISE SPECIFIED

NOMINAL SIZE RANGE		PLUS OR MINUS			NOMINAL SIZE RANGE		PLUS OR MINUS		
OVER	TO	FRACTION	2 PLACE DECIMAL	3 PLACE DECIMAL	OVER	TO	FRACTION	2 PLACE DECIMAL	3 PLACE DECIMAL
-	1	1/64	.01	.003	6	24	3/64	.03	.008
1	6	1/32	.02	.005	24	-	1/16	.05	.010

ANGULAR DIMENSIONS PLUS OR MINUS 1 DEGREE

√ ALL MACHINED SURFACES TO HAVE A SURFACE FINISH OF 125 MICROINCHES UNLESS OTHERWISE SPECIFIED.

WELDING SPECIFICATION

UNLESS OTHERWISE SPECIFIED ALL WELDS SHOULD ADHERE TO FAIRMONT TAMPER WELDING SPECIFICATION NO. 101

WEIGHT LBS.

THIRD ANGLE PROJECTION

DO NOT SCALE

SHEET 1 CONT. — ON —

DESCRIPTION 124: REAR HITCH EXTENSION

DRAWN HH	DATE 9-1-04	MACHINE TYPE TR10
CHECKED DEB	DATE 9-1-04	
APP-ENG APD	DATE 9-1-04	
APP-MFG	DATE	
LAST EDIT. 13080 .6	CHECKED dvan	
	DATE 2-Sep-04	

Fairmont Tamper
2401 Edward Ross Rd. Box 20
Cayce-West Columbia, South Carolina 29171-0020
(803) 822-1960

ENGDWG.NO. 4007253

THIS DOCUMENT CONTAINS PROPRIETARY INFORMATION AND SUCH INFORMATION MAY NOT BE DISCLOSED TO OTHERS FOR ANY PURPOSE OR USED FOR MANUFACTURING PURPOSES WITHOUT THE WRITTEN PERMISSION OF FAIRMONT TAMPER.

Section E
Jacking Components

PARTS LIST

ITEM NO	PART NUMBER	LEG	DESCRIPTION (30)	01	02	03	04
				QUANTITY			
1	0-2101683-0-06		CLAMP FRAME ASS'Y.	1	0	0	0
2	B5996XAG		CYLINDER & LOCK-UP ASS'Y.	2	2	2	2
3	0-3095003-0-06		STUD, THREADED	2	2	2	2
4	0-3652049-0-03		FEMALE ROD END	4	4	4	4
5	Y691328-055		PIN	5	5	5	5
6	A0068051		COTTER PIN 3/16 X 2 1/2	8	8	8	8
7	A0059012		WASHER 1 1/2	16	16	16	16
8	L424936		SPACER	40	40	40	40
9	X769757ZA		HYD CYL	1	1	1	1
10	Y691328-056		PIN	1	1	1	1
~~11~~	~~Y691328-055~~		~~PIN~~	~~1~~	~~1~~	~~1~~	
12	A0056019		1 1/4-12 JAM NUT	8	8	8	8
13	A0036261		HEX HD CAP SCR 1"-8 X 5 LG	8	8	8	8
14	L41149		1"-8 ESNA NUT	8	8	8	8
15	0-2101683-0-09		CLAMP FRAME ASS'Y.	0	1	0	0
16	0-2101683-0-10		CLAMP FRAME ASS'Y.	0	0	1	0
17	0-2101683-0-12		CLAMP FRAME ASSY	0	0	0	1
18	0-2202632-0-03		STABILIZER ASS'Y.	2	2	2	2

ASSEMBLY IDENTIFIER

01	02	03	04
TRI	TRI 63 GA.	TRIO 1 METER GA.	TRIO 42 GA

ASSEMBLY DESCRIPTION

	01	02	03	04
DER	9631.13	9631.21	9/31.1	
DR			KW	
CK				
APP				
MF				

REVISIONS

NO	DER	DESCRIPTION	DR	CK	APP	MF
1	83164	REL				
2	4768.8	ITEM # 12, 13 & 14 ADDED	KW			
3	4768.7	QTY. IT. 8 WAS 42 IN 01, 02, & 03. 3-15-89	KK			
4	4360.52	IT. 2, P/N WAS 0-2202361-0-07	LS			
5	4360.59	IT. 2, P/N WAS B5996XAE 4-2-91	LS			
6	7184.1	ITEM # 3 & 4 QTY WAS 4 & 8 RESPECTIVELY; ITEM # 18 ADDED; TAB "04" ADDED	KW			
7	8111.1	IT. 7 & 8 QTY. WERE 12 & 48. 8-2-96	HH			

ENG DWG NO: 0-2011502-0
SHEET: 1
CONT ON:
DESCRIPTION (30): RAIL LIFTING ASS'Y
DRAWN: DUCLOS
DATE: JUNE 8, 1983
CHECKED:
DATE:
APP: WPC
DATE: JUN 13/83
APP:
DATE:

Tamper

Div Cameron Corp
2401 Edmund Road
West Columbia
South Carolina 29169
Tel. (803) 794-9160
Telex 573423

american blueprint co lumbia

ENG DWG NO 0-2011502-0

SECTION E-1

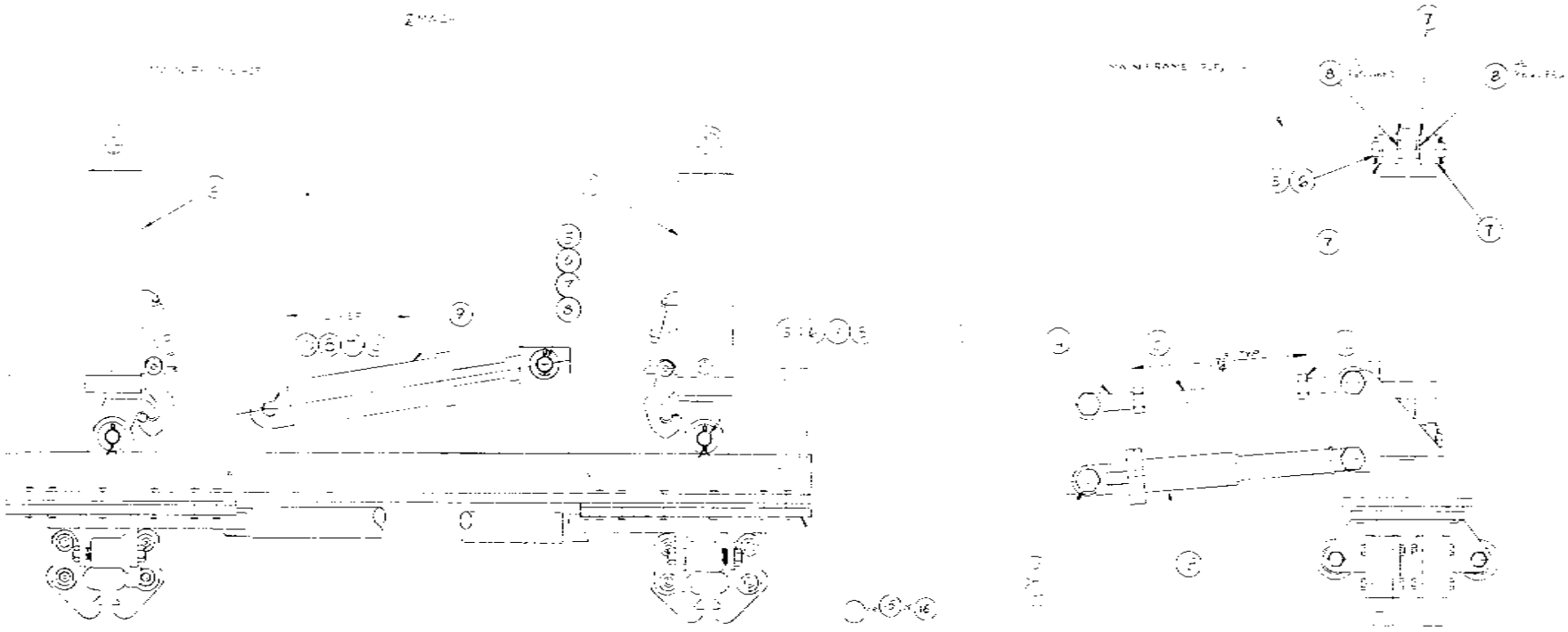

DO NOT SCALE

Tamper

CLAMP FRAME ASSY

SECTION E-2

DWG.NO.0-2101683-0-06 (56 1/2" GA)
DWG.NO.0-2101683-0-12 (42" GA)

ITEM	DESCRIPTION	PART NUMBER	QTY 06	QTY 12
005	RAIL CLAMP ASSY, R/H (SEE E-3)	W683484R	1	0
006	RAIL CLAMP ASSY, L/H (SEE E-3)	W683484L	1	0
007	INSULATING PLATE	Z683416	2	0
010	INSULATING WASHER	Z683490	36	32
011	RAIL CLAMP CYLINDER ASSY (SEE J-16)	X683361A	2	0
015	CYLINDER BUSHING	Z683488	8	8
016	ROLL PIN	L40115	8	8
017	PIN	Z683430	4	4
018	3/4-10 ESNA NUT	L40108	24	24
019	3/4-10 X 4 HH CAPSCR	A0036226	16	12
020	3/4-10 X 6 3/4 HH CAPSCR	A0037237	4	4
021	3/4 NOM SAE WASHER	A0060018	48	48
022	3/4 NOM PLAIN WASHER	A0059008	24	20
027	CLAMP FRAME WELDMENT	0-2101680-0-05	1	0
033	RAIL CLAMP ASSY, R/H (SEE E-3A)	W683874R	0	1
034	RAIL CLAMP ASSY, L/H (SEE E-3A)	W683874L	0	1
035	INSULATING PLATE	Z683859	0	2
040	CLAMP FRAME WELDMENT	0-2101680-0-10	0	1
041	RAIL CLAMP CYLINDER (SEE J-16)	X683361E	0	2

CLAMP FRAME ASSY

DWG NO 0-2101683-0-06 (56 1/2" GA)
DWG NO 0-2101683-0-12 (42" GA)

SECTION E-2

SHEET 1 OF 2

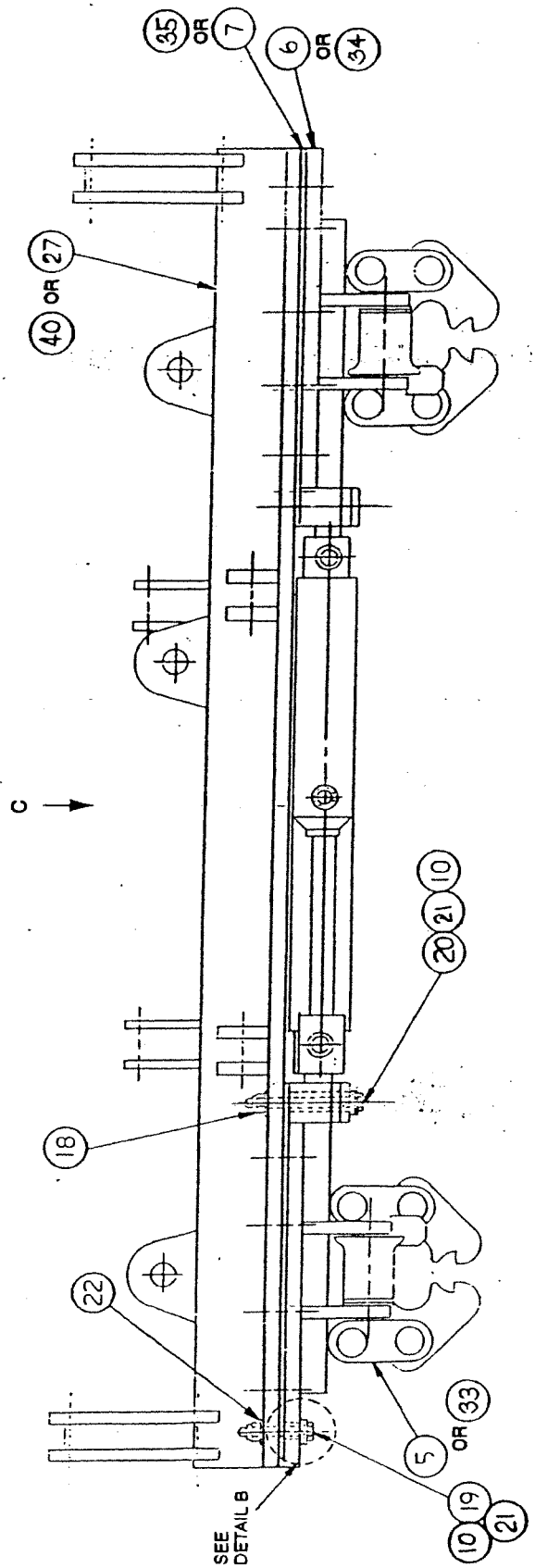

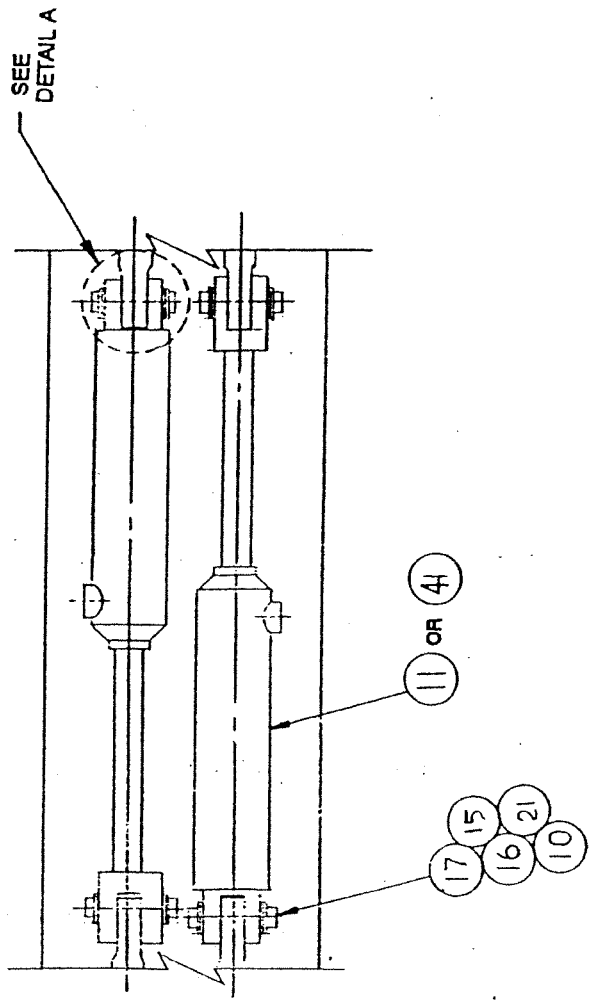

CLAMP FRAME ASSY
DWG NO 0-2101683-0-06 (56 1/2" GA)
DWG NO 0-2101683-0-12 (42" GA)
SECTION E-2
SHEET 2 OF 2

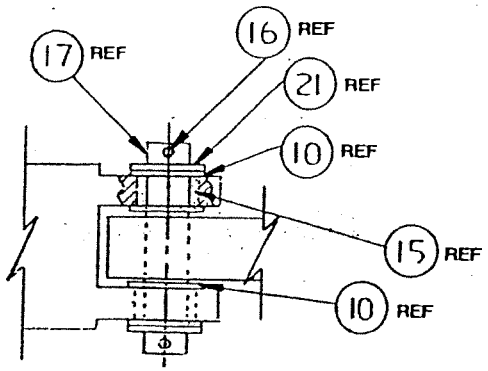

DETAIL A
HALF SCALE

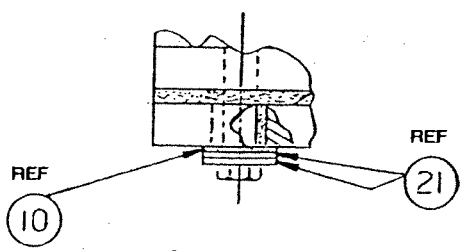

DETAIL B
HALF SCALE

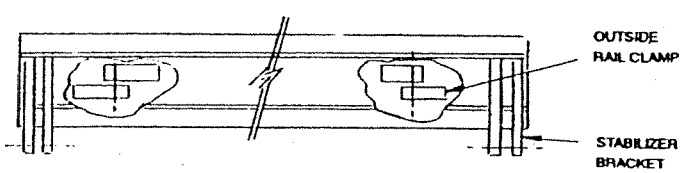

VIEW C

RAIL CLAMP ASSY
(56 1/2" GAUGE)

SECTION E-3

DWG.NO. W683484R (R/H)
DWG.NO. W683484L (L/H)

ITEM	DESCRIPTION	PART NUMBER	QTY R	QTY L
001	CLAMP BRACKET ASSY	W769699A	1	1
002	CLAMP ASSY (SEE E-4)	0-2300171-0-02	2	2
003	CLAMP PIN	Z683437	1	1
004	ROLL PIN	L40263	2	2
006	GREASE FITTING	L26028	8	8
007	STEEL PLATE WASHER	Z769772-001	2	2
009	RAIL WHEEL ASSY	Y683655	2	2
011	WHEEL SHAFT	Z683432	2	2
012	W/H GUIDE ROD SHIM	Z68373A	2	2
013	3/4 SAE FLAT WASHER	A0060018	10	10
014	3/4-10 ESNA NUT	L41764	6	6
015	LINK	Z683435	4	4
018	LINK BUSHING	Z683434	2	2
019	LINK BOLT	Z683433	4	4
020	PUSH ROD ASSY	Y683439	1	1
021	PULL ROD ASSY	Y683440	1	1
022	SPRING LOCK WASHER, 1/2 NOM	A0061013	1	1
023	1/2-13 X 1 3/4 HH CAPSCR	A0036124	1	1
024	HOLD DOWN PLATE	Z683441	1	1
025	SLIDING PLATE	Z683442	1	1
026	1 1/4 SAE WASHER	A0060022	8	8
027	LOCK PLATE	Z754903-001	2	2
028	1/4-20 5/8 SOCHD SCR W/ NYLOK	A0043032	4	4
030	SHIM WH GUIDE ROD	Z68373B	2	2
031	INSULATING BUSHING	Z683417	10	10
032	WASHER	Z683490	4	4
033	INSULATING BUSHING	Z683491	2	2
034	3/4-10 X 4 HEXHD CAPSCR	A0036226	2	2

RAIL CLAMP ASSY
DWG NO W683484R (R/H)
DWG NO W683484L (L/H)
SECTION E–3

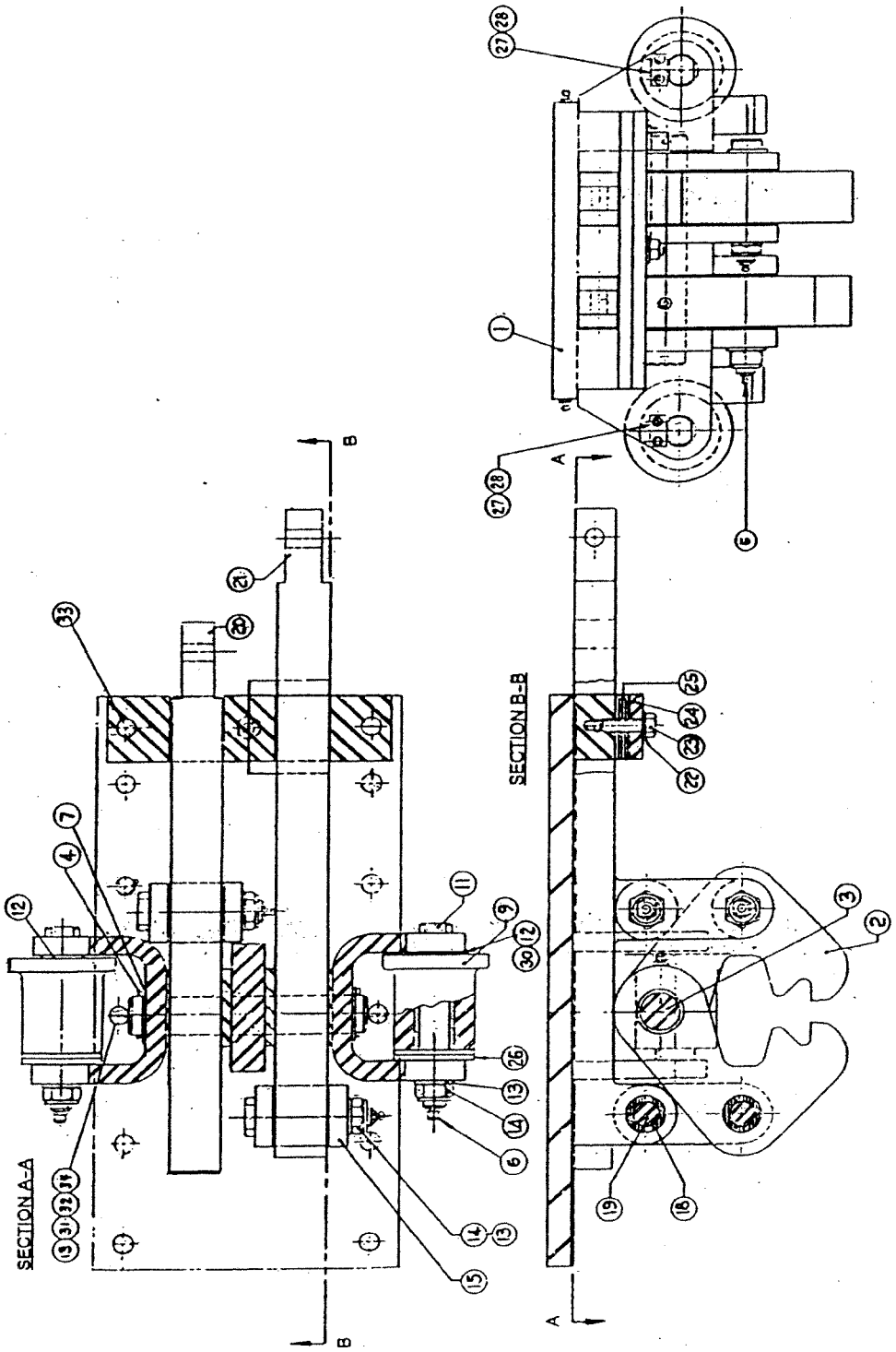

CLAMP ASSY
DWG NO 0-2300171-0-02
SECTION E-4

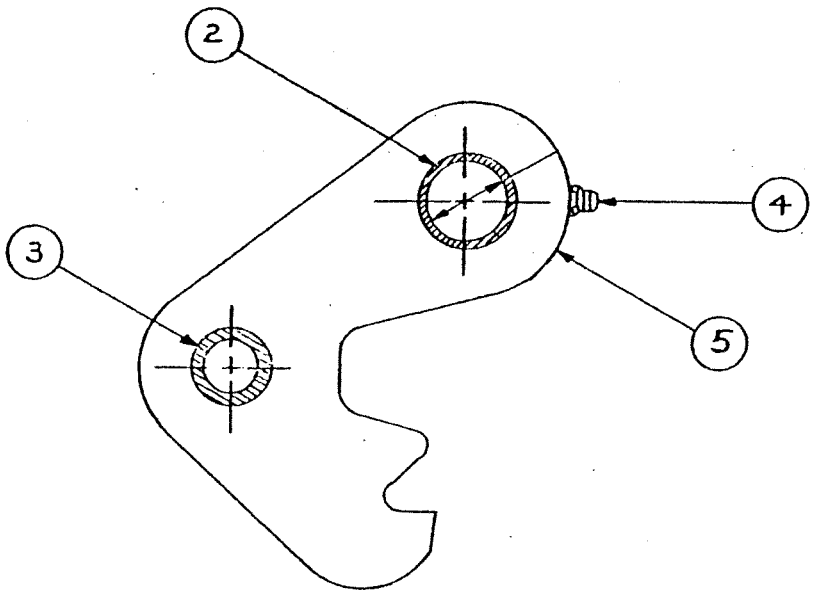

ITEM NO	PART NO	DESCRIPTION	QTY
5	0-1202926-0-01	RAIL CLAMP	1
4	L26028	GREASE FITTING	1
3	Z683434	LINK BUSHING	1
2	Z683436	CLAMP BUSHING	1

STABILIZER ASSY
DWG NO 0-2202832-0-03
SECTION E-5

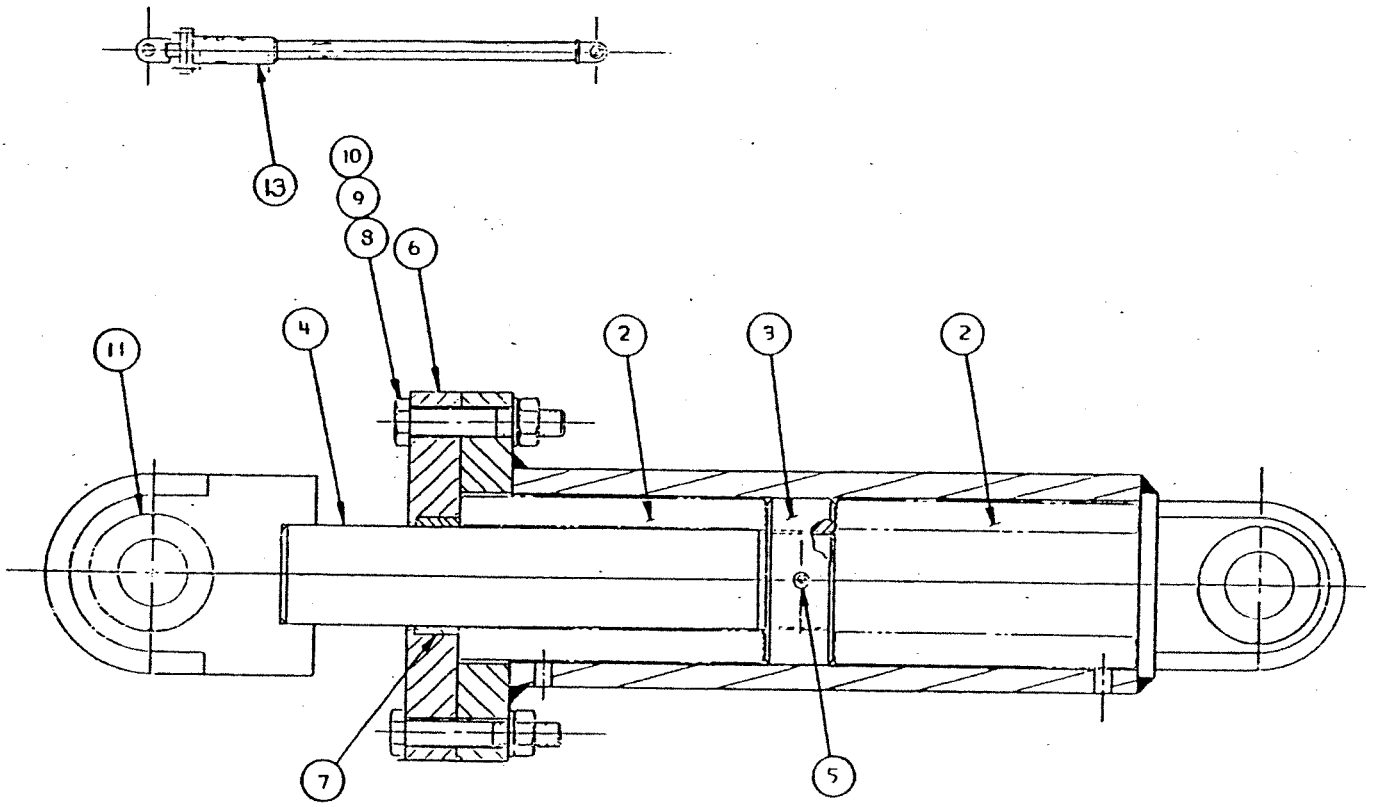

ITEM NO	PART NO	DESCRIPTION	QTY
13	0-2202647-0-02	EXTENDED SPRING BODY	1
11	L420159	BEARING	2
10	A0055012	3/8-16 HEX NUT	4
9	A0061010	3/8 MEDIUM LOCK WASHER	4
8	A0036069	3/8-16 X 2 1/4 HEX HD CAPSCR	4
7	0-3652004-0-31	OIL IMPREGNATED BEARING	1
6	0-1304838-0-01	END CAP	1
5	L40915	1/4 X 2 1/4 ROLL PIN	1
4	0-2202634-0-01	ROD ASSY	1
3	0-1408420-0-01	BUFFER STOP	1
2	0-3641000-0-19	COMPRESSION SPRING	2

Section F
Work Components

EXCHANGER UNIT INSTALLATION DWG NO H6758WAA SECTION F-1

(Parts List Only)

PARTS LIST

ITEM NO	PART NUMBER	DESCRIPTION	QUANTITY
1	C04225-2	EXTRACTOR ASSY	1
~~2~~	~~H6792Y01~~	~~LH BOOM HOSE BALER KIT~~	~~1~~
~~3~~	~~H6793Y01~~	~~RH BOOM HOSE BALER KIT~~	~~1~~
~~4~~	~~H6794Y01~~	~~BOOM LOCKUP KIT~~	~~2~~
~~5~~	~~C2859T22~~	~~GUSSET 3/8 THK.~~	~~4~~
~~6~~	~~D6946YAD~~	~~HANDRAIL WLDT.~~	~~3~~
~~7~~	~~L422283~~	~~CHAIN, UTILITY (FT)~~	~~26~~
~~8~~	~~0-3010036-0-01~~	~~PAD EYE~~	~~4~~
~~9~~	~~0-3010030-0-01~~	~~SNAP HOOK~~	~~4~~
10	A5092X01	BACKING PLATE	1
11	A5091Y01	SPACER	1
12	A5090Y01	SPACER	2
13	A1089Y01	LOCK PLATE	5
14	A0036257	1"-8 X 3 HHCS	10
15	L40273	1/4-28 GREASE FITTING	2
16	A0173Y03	HYCL HYD CYL 3" BORE	2
17	Y691328-136	PIN	4
18	A0060021	1" SAE FLAT WSHR	8
19	A0068029	1/4 X 1 1/2 COTTER PIN	8
20	0-1306503-0-01	SPACER	1
21	A0056002	1/4-28 HEX JAM NUT	2
22	A0036012	1/4-20 X 2 3/4 HHCS	2
23	A0059001	1/4 MED FLAT WASHER	4
24	L40237	1/4-20 ESNA NUT	2
25	Y691328-137	PIN W/ HOLES	2
26	A2399YAB	HOOK ASSY	2
27	A4771Y03	AIR CYL. SINGLE ACTING	2
28	L420854	CLEVIS W/ PIN	2

ASSEMBLY IDENTIFIER

PARTS LIST ONLY

NS TR10's 2004

REVISIONS

NO	ER	DESCRIPTION	DR	CK	APP	MF
A	13080.3	NEW RELEASE	HH			
B	13080.8	ADDED ITEMS 2 THRU 5. 9-20-04	HH	DEB	APD	
C	13080.18	ADDED ITEMS 6 THRU 9. 10-26-04	HH	DEB	APD	
D	13080.23	ADDED ITEMS 10 THRU 15. 12-3-04	HH	DEB	APD	
E	13080.24	ADDED ITEMS 16 THRU 19. 12-6-04	HH	DEB	APD	
F	13080.26	ADDED ITEM 20. 12-10-04	HH	DEB	APD	
G	13144.1	DELETED ITEMS 2 THRU 9. 6-15-05 MOVED ITEMS 2, 3, 5-9 TO H7238WAA.	HH	DES	APD	
H	100151	ADDED ITEMS 21 THRU 28. 12-16-05	HH	DES	APD	

ASSEMBLY DESCRIPTION

ER	
DR	
CK	
APP	
MF	

Fairmont Tamper™
2401 Edmund Road-Box 20
Cayce-West Columbia,
South Carolina 29171-0020
(803) 822-9160

DWG NO	H6758WAA
SHEET	1
CONT ON	-
DESCRIPTION (24)	EXCHANGER UNIT INSTL.
DRAWN	HH
DATE	8-13-04
CHECKED	DEB
DATE	8-13-04
APP	APD
DATE	8-13-04
APP	
DATE	

SHEET	1
CONT ON	-
LAST ECR	100151
CHECKED	dvan
DATE	11-Jan-06
DWG NO	H6758WAA

EXTRACTOR ASSY
DWG NO C04225-2
SECTION F-2
(Supplied by Norfolk Southern)

ITEM NO:	PART NUMBER/ CLASS/ITEM	PART NAME	DESCRIPTION:	QTY:
1	620-933944	UPDTD_4-02_S-ASM_L1	EXTRACTOR ASSEMBLY	1
2	620-998236	620-998236	TIE CLAMP CYLINDER	2
3	620-964449	TIE_CLAMP_RH_L10	TIE CLAMP ARM RH	2
4	620-972710	TIE_CLAMP_LH_L11	TIE CLAMP LH	2
5		620-538258		2
6	620-956398	TIE_CLAMP_FEET_L9	TIE CLAMP FEET	4
7	-	EX_CYL_PIN_L31	EXTRACTOR CYLINDER PIN	2
8	-	TIE_CLAMP_PIN_L32	TIE CLAMP PIN	4
9	620-629222	JAW_MOUNT_LH_L29	JAW MOUNT RH	2
10	620-629919	EXT_CYLINDER_L6	EXTRACTOR CYLINDER (LRG ROD)	1
11		FEMCLEV_1THREAD	Femaleclev1.00Thread	1
12	-	TUBE_LOCK_LUG_L33	TUBE LOCK LUG	2
13	-	CRADLE_S-ASM_L1	CRADLE SUB-ASSEMBLY	1
14	620-551309	OUTER_TUBE_S-ASM_L2	Outer Tube Sub-Assembly LH	1
15	620-537586	INNER_TUBE_S-ASM_L3	Inner Tube Sub-Assembly RH	1
16	-	MYLAR_PAD_L2	EXT CYLINDER SUPPORT WEAR PAD	2
17	620-461734	AIR_CYLINDER_L30	BIMBA AIR CYLINDER	2

B
Note # 2:
This Class/Item Includes:
(1) 620-013474 Outer Slide
(1) 620-629183 Pivot Head
Shop Bolted & Welded Together

B
Note # 1:
This Class/Item Includes:
(1) 620-016052 Inner Slide
(1) 620-631765 Pivot Head
Shop Bolted & Welded Together

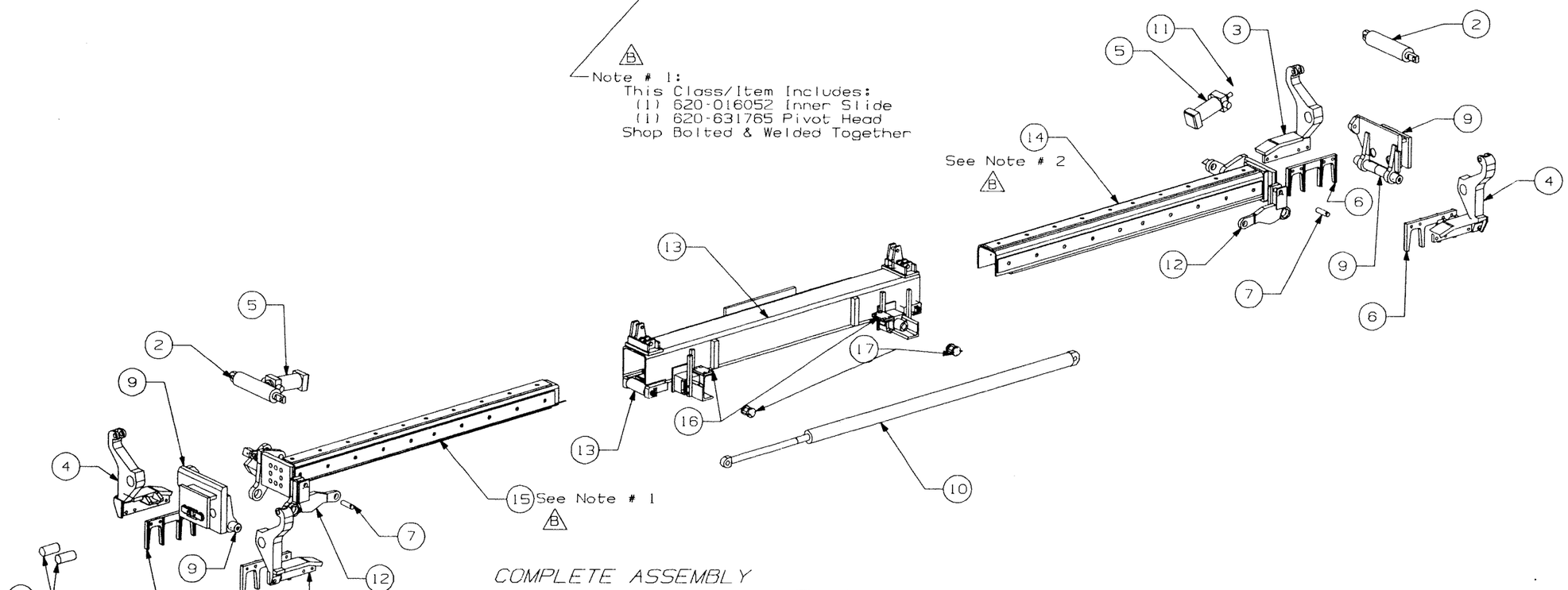

Class & Item #: 620- 933944
OEM No.: B1340VAA

MACHINES USED ON

General Tolerance Notes
Hold to the following tolerances unless otherwise noted

Decimal Place		Fractional
(1) Place 0.0: ± 0.10	(3) Place 0.000: ± 0.005	Under 24" ± 1/32"
(2) Place 0.00: ± 0.01	(4) Place 0.0000: ± 0.0020	Over 24" ± 1/16

REVISONS

NO	DATE	BY	DESCRIPTION
B	9/5/02	JFC	Added Clarification Notes

FILE NAME: 122601_extractor_assy.prt
FILE LOCATION: tamper\tri10\extractor_parts\
DRAWING NO: CRS- 21900.5.3.8
DESIGNED: | DRAWN: JFC | CHECKED: HTF | RELEASED: JFC | DATE: 12/26/01

TITLE:
620-933944
EXTRACTOR ASSEMBLY

REVISION: B

NORFOLK SOUTHERN

CHARLOTTE ROADWAY SHOP
ENGINEERING DEPARTMENT
CHARLOTTE, N.C. 28206

SECTION FO

WORK COMPONENTS OPTIONS

ENG.DWG.NO.
C8668XAA

REVISIONS							
NO	ER	DESCRIPTION	ZONE	DR	CK	APP	MF
1	599332	NEW RELEASE		HAWK			
2		3-INCH DIM. WAS 9 1/4 2-4-97	B-1	HH			

SECTION FO-0906

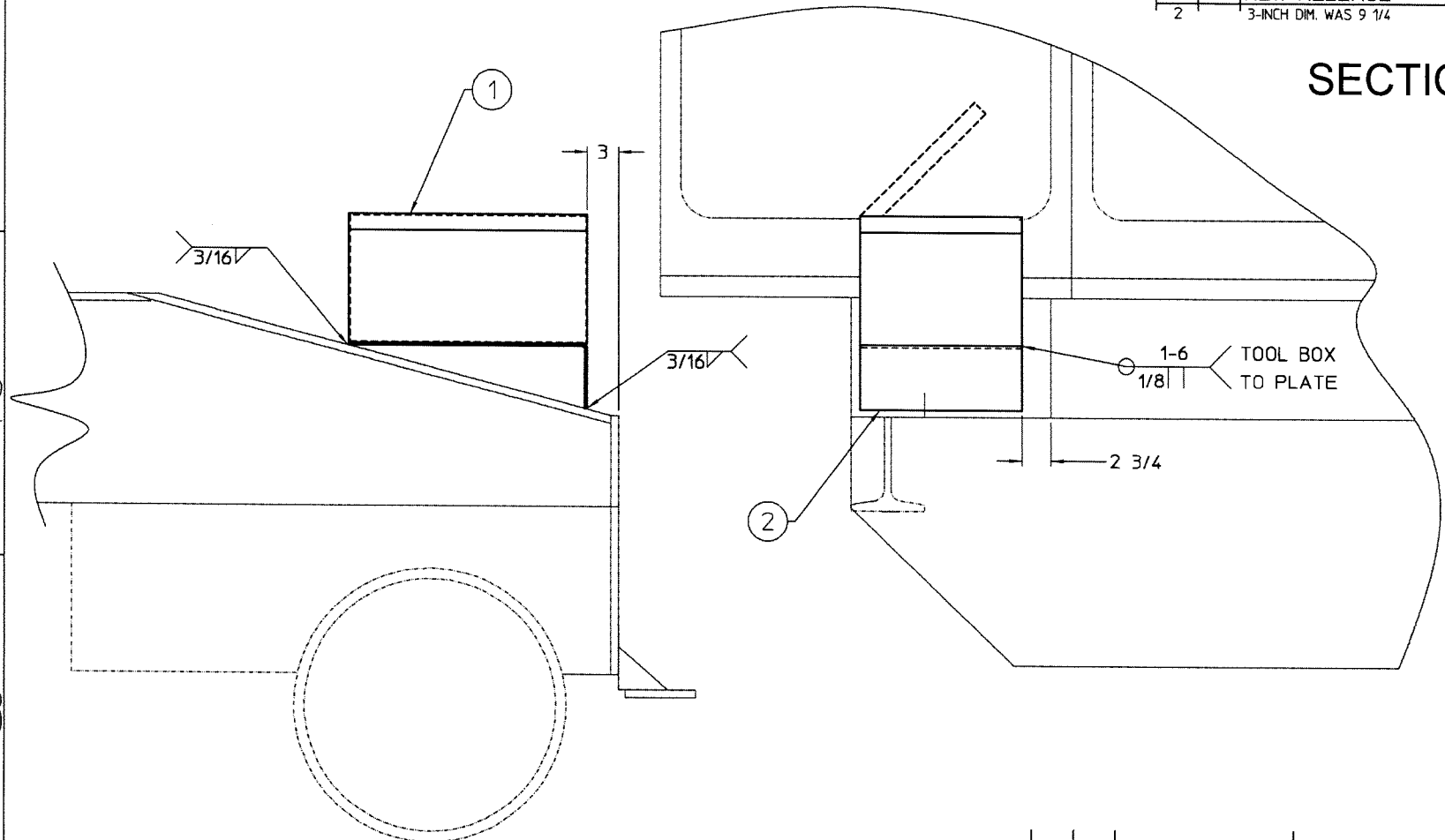

X-ASSY X 8

FIG NO.	ITEM NO.	PART NUMBER	DESCRIPTION AND MATERIAL SIZE (REF.ONLY)	QTY
	2	C8664Y01	TOOL BOX MOUNT	1
	1	B4723Y01	KNAACK TOOL CHEST	1

IMPLIED TOLERANCES
ALL DIMENSIONS ARE IN INCHES-TOLERANCE UNLESS OTHERWISE SPECIFIED

NOMINAL SIZE RANGE		PLUS OR MINUS			NOMINAL SIZE RANGE		PLUS OR MINUS		
OVER	TO	FRACTION	2 PLACE DECIMAL	3 PLACE DECIMAL	OVER	TO	FRACTION	2 PLACE DECIMAL	3 PLACE DECIMAL
-	1	1/64	.01	.003	6	24	3/64	.03	.008
1	6	1/32	.02	.005	24	-	1/16	.05	.010

ANGULAR DIMENSIONS PLUS OR MINUS 1 DEGREE

√ ALL MACHINED SURFACES TO HAVE A SURFACE FINISH OF 125 MICROINCHES UNLESS OTHERWISE SPECIFIED.

WELDING SPECIFICATION

UNLESS OTHERWISE SPECIFIED ALL WELDS SHOULD ADHERE TO FAIRMONT TAMPER WELDING SPECIFICATION NO. 101

WEIGHT lbs.

3rd ANGLE PROJECTION

DO NOT SCALE

SHEET 1 CONT. – ON –

DESCRIPTION Q4
TOOL BOX INSTALLATION

DRAWN KIM HAWKINS	DATE 8-18-92	MACHINE TYPE TR10 (NS)	
CHECKED DGV	DATE 8-18-92		
APP-ENG	DATE		
APP-MFG	DATE		
LAST ECR. 8835. 1	CHECKED dvgn DATE 3-Mar-97	ENG.DWG.NO. C8668XAA	

Fairmont Tamper™ 2401 Edmund Road-Box 20 Cayce-West Columbia, South Carolina 29171-0020 (803) 822-9160

THIS DOCUMENT CONTAINS PROPRIETARY INFORMATION AND SUCH INFORMATION MAY NOT BE DISCLOSED TO OTHERS FOR ANY PURPOSE OR USED FOR MANUFACTURING PURPOSES WITHOUT THE WRITTEN PERMISSION OF FAIRMONT TAMPER.

Section J
Hydraulic Components

PARTS LIST

FIG	ITEM NO	PART NUMBER	DESCRIPTION (29)	AA	AB	AC	AD	AE	AF	AG				
				QUANTITY										
	1	A8940VAA	MAJOR VALVING MOD.	1	0	0	0	0	0	0				
	2	A6645Y01	HYD JOYSTICK	1	1	1	1	1	1	1				
	3	A0729Y04	VALVE, 2 WAY SOL.	1	1	1	1	1	1	1				
	4	L421386	SELECTOR VALVE, MAN.	2	2	2	2	2	2	2				
	5	0-3334049-0-05	RELIEF VALVE	1	1	1	1	1	1	1				
	6	F016074	DC-STR 16 x 16 SAE	—	—	—	—	1	1	1				
	7	L420562	1" MP / 3/4 JIC 45°	—	—	—	—	1	1	1				
	8	Y765715-001	MANIFOLD CLAMP	1	1	1	1	1	1	1				
	9	L41228	QUICK DISC PLUG 1/4NPT	6	6	6	6	5	5	0				
	10	A2727X01	EXTERNAL OIL COOLER	1	1	1	1	1	1	1				
	~~11~~	~~A9605WAD~~	~~300 PSI FILTER ASSY~~	1	1	1	1							
	~~12~~	~~0-3354005-0-06~~	~~FILTER ELEMENT (7 µ)~~	X	X	X	X	X	PARTS REF					
	~~13~~	~~0-3307004-017~~	~~INDICATOR GAUGE~~	1	1	1	1							
	14	L40549	IN-LINE CHECK, 3/4 FP, 5 PSI	1	1	1	1	1	1	1				
	15	0-3336021-0-07	IN-LINE CHECK, 1" FP, 5 PSI	6	6	6	6	6	6	6				
	16	L424580	IN-LINE CHECK, 1" FP, 65 PSI	1	1	1	1	1	1	1				
	17	L425561	IN-LINE CHECK, 1" ORING, 95 PSI	2	2	2	2	2	2	2				
	18	0-3335001-004	FLOW CONTROL 3/8 FP	1	1	1	1	0	0	0				
	19	0-3334049-0-01	RELIEF W/HAND KNOB	2	1	1	1	1	1	1				
	20	A2130Y07	PRESS REDUCING VALVE	2	2	2	2	2	2	2				
	~~21~~	~~A0069023~~	~~M8 SPRING WASHER~~	4	4									
	~~22~~	~~A0069007~~	~~M8 X 16 HEX HD SCR~~	4	4									
	~~23~~	~~A0050085~~	~~1/4-20 X 2 3/4 RD HD SCR~~	2	—									
	24	A0036032	5/16-18 X 3/4 HEX HD SCR	13	25	16	16	16	16	16				
	25	A0061009	5/16 LOCKWASHER	21	33	30	30	30	30	30				
	~~26~~	~~A0036061~~	~~3/8-16 X 3/4 HEX HD SCR~~	4	4	4	4	—	—	—				
	27	A0036063	3/8-16 X 1" HEX HD SCR	18	18	21	21	21	21	21				
	28	A0036069	3/8-16 X 2 1/4 HEX HD SCR	4	4	4	4	4	4	4				
	29	A0036070	3/8-16 X 2 1/2 HEX HD SCR	2	2	2	2	2	2	2				
	30	A0061010	3/8-16 LOCK WASHER	28	28	31	31	31	31	31				
	31	A0036316	1/2-13 X 1 1/2 HEX HD SCR	6	6	6	6	6	6	6				
	32	A0059005	1/2 FLAT WASHER	20	20	20	20	20	20	20				
	33	L41523	1/2-13 LOCKNUT	14	14	14	14	14	14	14				
			ASSEMBLY DESCRIPTION	TRIO PHASE III 30 MPH OVER THE CENTRAL 24 VDC NON-LOAD SENSING		TRIO 4-53T 30 MPH NON-LOAD SENSING 24 VDC	TRIO DEUTZ 30 MPH NON-LOAD SENSING 24 VDC	TRIO CUMMINS ENG. 30 MPH NON-LOAD SENSING		TRIO 30 MPH CUMMINS ENG. N.L.S. TIER II	TRIO N.S. 2004			

REVISIONS

NO	ER	DESCRIPTION	DR	CK	APP	MF
4	ECN 4816	REPLACED REVISION 3. QTY ITEM 28 WAS 8.	KK		Hawk	
8	5252.3	DELETED ITEM 7. QTY ITEM 9 WAS 4. 6-4-90	KK		Hawk	
9	5402.1	IT#9 QTY WAS 2 9-21-90			Hawk	
10	5455.1, 5455.5	DELETED IT. 6 & 23 DELETED ASSY AA RELEASED ASSY AB	KED		Hawk 9-11-91	
13	5767.1	IT. 20 WAS A2130Y02 9-9-91	KED		Hawk	
14	5834.6	IT 19 Qty WAS 2, DELETED IT. 21 & 22 2-12-92	SPB		Hawk	
16	6082.3	ASSY AB: IT. 24 & 25 QTY. WAS 13 & 21.	HH		Hawk 10-26-92	
17	6162.6	DELETED ASSY: AB; RELEASED ASSY: AC. IT. 11 & 12 WERE A9605WAB & L425299. 12-17-92	HH		Hawk	
20	7771.2	DELETED IT. 11-13 AND 26. 10-20-95	HH		Hawk	
22	8828.1	IT. 24 WAS QTY. 22 ON AC & AD 03-26-97	DAS		HH	
24	12285	ADDED TAB-AE. IT-7 WAS A6111Y02 QTY 2 TAB-AA. 11-16-00	HH		NW	
AB	100250	TABS AE, AF & AG ADDED IT-6. 1-1-06	HH			

ASSEMBLY IDENTIFIER	AA	AB	AC	AD	AE	AF	AG
ER	5252.5	4816	5252.5	1	12285	13050	5252.5
DR	HH		HH	HH	HH	HH 3-15-04	MT 8/1/04
CK							
APP		LGS		NW	NW		
MF							

ENG OWG NO: A8998V

SHEET 1 CONT ON 2

DESCRIPTION (30): HYDRAULIC ASSY

DRAWN: 2-7-84

CHECKED: 3-21-88

APP

DATE

SHEET 1 CONT ON 2

END OWG NO: A8998V

Tamper

Division Cannon Corp.
2401 Edmund Road—Box 20
Cayce-West Columbia,
S. C. 29171-0020
(803) 794-9150

ENGS 34

68458

PARTS LIST

FIG	ITEM NO	PART NUMBER	DESCRIPTION (29)	AA	AB	AC	AD	AE	AF	AG				
				QUANTITY										
	~~34~~	~~L420110~~	~~1/4 PIPE PLUG HEX HEAD~~	~~2~~	~~2~~	~~2~~	~~3~~							
	35	L422997	1/4 PIPE PLUG SOC HEX	2	2	2	2	0	0	0				
	36	L420111	3/4 PIPE PLUG HEX HD	2	2	2	2	2	2	2				
	37	L421700	1" PIPE PLUG	2	2	2	2	2	2	2				
	38	L411394	1 1/4 MP - 1" FP RED	2	2	3	3	3	3	3				
	~~39~~	~~L411516~~	~~1 1/4 PIPE COUPLING~~	~~1~~										
	~~40~~	~~L423299~~	~~1/4 MP 1/8 MP NIPPLE~~	~~1~~	~~1~~	~~1~~	~~1~~							
	41	L41079	1/4 MP NIPPLE	2	1	1	2	1	1	1				
	~~42~~	~~L425403~~	~~1/4 MP 3/8 MP NIPPLE~~	~~2~~										
	43	L420967	1" MP - 3/4 MP NIPPLE	1	2	2	2	1	1	2				
	44	L411415	1" PIPE NIPPLE	5	5	5	5	6	6	5				
	45	L411413	1 1/4 MP - 1" MP NIPPLE	1	2	2	4	0	0	2				
	46	L40324	3/8 PIPE NIPPLE	1	1	1	1	0	0	1				
	~~47~~	~~L420087~~	~~1/4 MP-MP ELBOW 90°~~	~~1~~	~~2~~	~~2~~	~~2~~							
	48	L40051	1/2 MP - FP ELBOW 90°	2	2	2	2	2	2	2				
	49	L411417	1" MP-MP ELBOW 90°	3	3	3	3	2	2	3				
	~~50~~	~~L411151~~	~~2" FP-FP ELBOW 90°~~	~~2~~	~~2~~	~~2~~	~~2~~							
	~~51~~	~~L424706~~	~~1/4 FP-MP-FP TEE~~	~~1~~										
	~~52~~	~~L40656~~	~~3/8 FP-FP-FP~~	~~1~~										
	~~53~~	~~0-3304112-0-01~~	~~1/4 MP-FP-FP~~	~~1~~										
	~~54~~	~~L41025~~	~~3/8 MP-FP-FP~~	~~1~~										
	55	0-3304112-0-06	1" MP-FP-FP	10	10	8	8	9	9	8				
	56	0-3304112-0-08	1 1/4 MP-FP-FP	1	1	2	2	1	1	2				
	57	L411409	1/2 FP-FP-FP	1	1	1	1	0	0	1				
	~~58~~	~~L411379~~	~~1/4 MP 3/8 JIC STR~~	~~1~~										
	59	L420114	3/8 MP - JIC	1	1	1	1	0	0	1				
	60	L423156	1/2 MP - 1/4 JIC	2	2	2	2	2	2	2				
	61	L411380	1/2 MP - 3/8 JIC	4	4	3	3	3	3	3				
	62	L411376	1/2 MP - JIC	7	1	1	1	1	1	1				
	63	0-3304028-0-22	1" O RING - 3/4 JIC STR	3	2	2	2	2	2	2				
	~~64~~	~~L424351~~	~~3/4" O RING - 1" JIC~~	~~2~~	~~2~~	~~2~~	~~2~~							
	65	L411374	1" MP - 3/4 JIC	2	4	3	4	2	2	3				
	66	L411372	1" MP - JIC	7	5	5	6	5	5	5				
				~~TRIO 30 MPH LOAD SENSING~~	~~DEUTZ 24VDC 30 MPH NON-LOAD SENSING~~	TRIO 4-53T 24VDC 30 MPH NON-LOAD SENSING	TRIO DEUTZ 24VDC 30 MPH NON-LOAD SENSING	TRIO CUMMINS ENG. 30 MPH NON-LOAD SENSING	TRIO CUMMINS ENG. TIER II 30 MPH N.L.S.	TRIO 30 MPH N.L.S.				

REVISIONS

NO	ER	DESCRIPTION	DR	CK	APP	MF
4	ECN 4816	REPLACES REVISION 3 IT. 37 P/N WAS L40672 DELETED ITEM 39	KK		Hauk	
8	6252.3	QTY IT. 41 WAS 3. QTY IT. 59 WAS 3 DELETED ITEMS 42 51-54 & 58. QTY IT. 62 WAS 11 IT. 64 P/N WAS L411373 QTY WAS 1	KK		Hauk 6-9-90	
9	—	NO CHANGE				
10	6452.12-3	DELETE ASSY AA RELEASE ASSY AB 2-1-91	MM		Hauk	
11	5572.2	IT 43 QTY WAS 1 IT 62 QTY WAS 7 IT 65 QTY WAS 2 IT 66 QTY WAS 7	MM	RD	Hauk 3-8-91	
12	5572.9	IN TAB 'AB' QTY. IT. 62 WAS 6, IT. 63 WAS L411383-QTY. WAS 3, QTY. IT. 41 WAS 2, QTY IT. 47 WAS 1, QTY. IT. 45 WAS 1	KRO	RD	Hauk 6-20-91	
17	8762.6	DELETED ASSY: AB; RELEASED ASSY: AC. 12-17-92	HH			
19	6444.1	ASSY AD: ITEM 41 QTY WAS 1. ITEM 47 WAS L41207 ASSY AD: QTY WAS 3.	HH 12-7-94		Hauk 12-14-94	
20	7779.2	DELETED IT. 34 40, 47 & 50. IT. 38 QTY WAS 2, IT. 55 QTY WAS 10, IT. 56 QTY WAS 1, IT. 65 QTY WERE AC-4 & AD-5. 10-20-95	HH		Hauk 11-1-95	
21	8441.1	IT 61, QTY WAS 4 FOR A8998VAC+AD REMOVED IT. 64 11 SEPT 96				
24	12285 -1	NO CHG. ADDED TAB-AE. 11-16-00	HH		NW	
AB		NO CHG				

ASSEMBLY DESCRIPTION

EH	6455.5	6112.6	6-5-97	12285 -1	13050.8	13090.5								
DR	MM	HH	HH 11-8-94	HH 11-16-00	HH 3-1-94	MM 12-17-92								
CK					3-7-94									
APP														
MF														

Tamper

Dalton Canon Corp.
2401 Edmund Road-Box 20
Cayce-West Columbia,
S. C. 29171-0020
(803) 794-9160

ENG DWG NO A8998V
SHEET 2 CONT ON 3
DESCRIPTION (30) HYDRAULIC ASSY
DRAWN
DATE 2-7-89
CHECKED
DATE
APP
DATE
APP
DATE
DATE

American Weight of Columbia

SHEET 2 CONT ON 3 ENG DWG NO A8998V

HOS 34

PARTS LIST

ENG DWG NO: A8998V

SHEET 3 CONT ON 4

DESCRIPTION (30): HYDRAULIC ASSY

DRAWN: Henry Rodriguez DATE: 2-7-89

CHECKED DATE APP

FIG	ITEM NO	PART NUMBER	DESCRIPTION (29)	ASSEMBLY IDENTIFIER / QUANTITY: ~~AA~~	~~AB~~	AC	AD	AE	AF	AG
	67	L424338	1¼ MP - 1" JIC STR	2	1	1	0	0	0	1
	68	L411377	1¼ MP - JIC	–	–	1	1	1	1	1
	~~69~~	~~0-3304013-0-35~~	~~1¼ MP - 2" JIC~~	~~1~~						
	70	L411385	1/4 MP - JIC STR	2	1	1	1	1	1	1
	~~71~~	~~L411843~~	~~1/4 MP - 3/8 JIC 45°~~	~~1~~						
	72	L420002	1/4 MP - JIC 90°	5	5	3	3	3	3	3
	73	L423097	3/8 MP 1/4 JIC	–	–	4	4	4	4	4
	74	L420717	1/2 MP - 3/8 JIC	7	7	9	9	5	5	9
	75	0-3304017-0-19	1" O RING - 3/4 JIC 90°	1	2	2	2	2	2	2
	76	L420005	3/4 MP - 1/2 JIC	6	6	4	4	4	4	4
	~~77~~	~~L420006~~	~~3/4 MP - JIC~~	~~1~~	~~1~~	~~1~~	~~1~~			
	~~78~~	~~L420007~~	~~3/4 MP - 1" JIC SW. 90°~~	~~1~~						
	79	L420008	1" MP - JIC	5	3	3	4	4	4	3
	80	L420119	1" MP - JIC EX-LONG	1	1	1	1	1	1	1
	81	L424354	1" MP - JIC - JIC TEE	2	2	2	2	2	2	2
	82	0-3304079-0-02	1" FP - JIC SW STR	1	1	1	1	1	1	1
	83	0-3304132-0-08	1" JIC SW - 1/2 JIC RED	1	1	1	1	0	0	1
	84	0-3304132-0-02	1/2 JIC SW - 1/4 JIC	4	4	2	2	2	2	2
	85	0-3304132-0-03	1/2 JIC SW - 3/8 JIC	1	1	3	3	3	3	3
	86	0-3304132-0-10	1¼ JIC SW - 1" JIC	5	5	4	4	4	4	0
	87	0-3304034-0-04	3/4 JIC SW - 1" JIC BUSH	1	1	1	1	1	1	1
	~~88~~	~~0-3304122-0-24~~	~~1/4 MP TUBE ADAPTER~~	~~1~~	~~1~~	~~1~~	~~1~~			
	~~89~~	~~0-3304196-0-01~~	~~1/2 JIC W JIC 90° LONG~~	~~2~~						
	90	0-3304196-0-05	1/2 JIC SW - JIC 90° SHORT	1	1	1	1	1	1	1
	91	0-3304148-0-11	1" JIC SW - JIC 90°	2	2	2	2	2	2	2
	92	0-3304148-0-12	1¼ JIC SW - JIC 90°	8	8	8	8	2	2	8
	93	L425923	1" JIC SW RUN TEE	4	4	4	3	3	3	4
	94	0-3304057-0-05	1" JIC SW BRANCH TEE	1	1	1	1	1	1	1
	95	0-3304057-0-12	1¼ JIC SW RUN TEE	6	6	4	4	4	4	4
	96	L423245	3/4 JIC TEE	1	1	1	1	1	1	1
	97	L426194	3/4 O RING - 1/2 JIC STR	0	6	6	6	0	0	6
	98	L424676	3/8 ORING PLUG	1	1	1	1	0	0	1
	~~99~~	~~L420243~~	~~1/2 O RING PLUG~~	~~2~~	~~2~~	~~2~~	~~2~~			
			ASSEMBLY DESCRIPTION	TR-10 TRACTOR 20 MPH LOAD SENSING		TRIO DEUTZ 24VDC 30 MPH NON-LOAD SENSING TRIO 4-53 T 24 VDC 30 MPH NON-LOAD SENSING		TRIO CUMMINS ENG. 30 MPH NON-LOAD SENSING	TRIO CUMMINS ENG. TIER II	TRIO 30 MPH N.L.S. TRIO NS 2004

REVISIONS

NO	ER	DESCRIPTION	DR	CK	APP	MF
4	ECN 4816	REPLACES REVISION 3. ADDED ITEM 88. DELETED ITEMS 68 & 69	KK		Hawk	
8	5252.3	DELETED ITEMS 71, 85, + 89. DELETED IT. 78 QTY ITEM 90 WAS 4. QTY IT. 91 WAS 1 6-4-90	KK		Hawk	
9	5402.1	IT# 93 QTY WAS 1 & RE INSTATED IT# 85	MF	904	Hawk	
10	5453.14	DELETED IT. 73, ASSY AA; REL ASSY AB	KR		Hawk 3-11-91	
11	5572.2	IT 79 QTY WAS 5. 3-8-91	MF	RJ	Hawk	
12	5572.9	ADD IT. 97, IT. 75 WAS L423785 - QTY. WAS 1, QTY. IT. 67 WAS 2	KR	RJ	Hawk 5-28-91	
14	5834.6	IT 70 QTY WAS 2 2-12-92	SPB	RJ	Hawk	
17	6162.6	DELETED ASSY: AB; RELEASED ASSY: AC 12-17-92	HH			
20	7779.2	ADDED IT. 68 DELETED IT. 77 88 & 99. IT. 86 & 95 QTY WERE 5 & 6. 10-20-95	HH		Hawk	
21	8441.1	A8998VAC & AD; IT 72 QTY WAS 5; IT 74 QTY WAS 7; IT 85, QTY WAS 1; IT 91 QTY WAS 2. 11 SEPT 96				
24	12285	NO CHG. ADDED TAB-AE. 11-16-00	HH			
Z	13050.8	TABS AC, AD & AE: ADDED ITEM 73, IT-76 QTY WERE 6, IT-84 QTY WERE 4. 3-15-04				
AB	100250	TAB-AE & AF: IT-91 QTY WAS 0. 1-6-06				

ER	5453.5	6162.6	5252.6	12285	13050.8	13050.5	13050.8
DR	MF	HH	HH	HH	HH	MF	MF
CK							
APP		LES					
MF							

Tamper

Division Carron Corp.
2401 Edmund Road - Box 20
Cayce-West Columbia,
S.C. 29171-0020
(803) 794-9180

ENGN 34

PARTS LIST

ENG DWG NO: A8998V
SHEET 4 CONT ON 5
DESCRIPTION (30): HYDRAULIC ASSY

FIG	ITEM NO	PART NUMBER	DESCRIPTION (29)	~~AA~~	~~AB~~	AC	AD	AE	AF	AG					
	100	L423036	3/8 O RING - 3/8 JIC STR	4	6	6	6	6	6	6					
	101	L420150	1/2 O RING - JIC	3	5	6	6	6	6	6					
	102	L422949	5/8 O RING - 3/4 JIC	2	2	2	2	2	2	2					
	~~103~~	~~L424015~~	~~1" ORING JIC~~	~~1~~	~~2~~	~~2~~	~~2~~								
	104	L425694	1" O RING - 1 1/4 JIC	4	4	4	4	4	4	4					
	105	L411939	3/8 ORING - JIC 90°	2	1	1	1	1	1	1					
	~~106~~	~~L423154~~	~~1/2 ORING 3/8 JIC 90°~~	~~1~~	~~1~~										
	107	0-3304181-0-04	3/8 O-RING - JIC - JIC TEE	1	1	1	1	1	1	1					
	108	0-3304181-0-02	1" O-RING - JIC - JIC TEE	1	1	1	1	1	1	1					
	109	L425372	3/8 O-RING - 1/4 FP STR	1	1	1	1	0	0	1					
	110	L423234	1" O-RING - 1" FP STR	3	4	4	4	4	4	4					
	111	0-3304000-0-01	1/2 O-RING - FP 90°	4	4	4	4	0	0	4					
	~~112~~	~~0-3304143-0-10~~	~~2" SPLIT FLANGE - 1 1/4 JIC~~	~~1~~	~~1~~	~~1~~	~~1~~								
.69	113	L411006	1/4 HP HOSE (2781) (ft)	135	135	135	135	REF	REF	REF	Ft				
.84	114	L411007	3/8 HP HOSE (ft)	179	185	192	192	REF	REF	REF	Ft				
.97	115	L411008	1/2 HP HOSE (ft)	105	115	87	87	REF	REF	REF	Ft				
1.25	116	L411009	3/4 HP HOSE (ft)	48	60	60	60	REF	REF	REF	Ft				
1.56	117	L411010	1" HP HOSE (ft)	110	98	98	95	REF	REF	REF	Ft				
	118	L420000	1/4 JIC SW HOSE END STR	46	48	48	48	REF	REF	REF					
	119	L411363	3/8 JIC SW HOSE END	56	58	66	66	REF	REF	REF					
	120	L411359	1/2 JIC SW HOSE END	48	50	38	38	REF	REF	REF					
	121	L411358	3/4 JIC SW HOSE END	14	22	22	22	REF	REF	REF					
	122	L420001	1" JIC SW HOSE END	34	26	26	24	REF	REF	REF					
1.78	123	0-3305013-0-04	1 1/4 VHP HOSE (FC250A)	45	45	45	45	REF	REF	REF	Ft				
	124	B3913Y03	1 1/4 JIC SW HOSE END CRIMP.	8	8	8	8	REF	REF	REF					
	125	0-3305012-0-03	1 1/4 SUCTION HOSE (2661)	3.5	3.5	3.5	0	REF	REF	REF	Ft				
	~~126~~	~~0-3305012-0-05~~	~~2" SUCTION HOSE~~	~~6.5~~	~~6.5~~	~~6.5~~	~~6.5~~				Ft				
	~~127~~	~~0-3304171-0-09~~	~~BAND CLAMP (2 3/8 - 2 5/8 ID)~~	~~8~~	~~8~~	~~8~~	~~8~~								
	128	0-3304171-0-24	BAND CLAMP (-20 HOSE)	4	4	4	0	0	0	4					
	~~129~~	~~0-3304201-0-09~~	~~2" SPLIT FLANGE - HOSE 90°~~	~~2~~	~~2~~	~~2~~	~~2~~								
	130	0-3304201-0-05	1 1/4 SPLIT FLANGE - HOSE	1	1	1	0	0	0	1					
	131	0-3304167-0-04	1" SPLIT FLANGE - JIC	2	2	2	2	2	2	2					
	132	0-3304167-0-02	3/4 SPLIT FLANGE - JIC	1	1	1	0	0	0	1					

ASSEMBLY IDENTIFIER

	~~AA~~	~~AB~~	AC	AD	AE	AF	AG
	~~TRIO PHASE III 30 MPH LOAD SENSING 24 VDC~~	~~TRIO 30 MPH NON-LOAD SENSING 24 VDC~~	TRIO 30 MPH NON-LOAD SENSING 24 VDC	TRIO 30 MPH NON-LOAD SENSING DEUTZ 24 VDC	TRIO CUMMINS ENG. 30 MPH NON-LOAD SENSING	TRIO CUMMINS ENG. TIER II	TRIO 30 MPH HILLS
ER	5933.5	6114.1	6453.7	12285.1	13050.8	13080.5	
DR	HH	HH	HH	HH	HH	HH	
CK							
APP		LES					
Ref							

REVISIONS

WO	ER	DESCRIPTION	DR	CK	APP	REF
23	10178	IT-101 WAS QTY 5, IT-115 WAS QTY 100, IT-119 WAS QTY 62, IT-120 WAS QTY 42	VJV			
24	12285	NO CHG. ADDED TAB-AE. 11-16-00	HH			
AB	100250	ITEM 101 QTY WAS 7. 1-L-06				

TRIO INS 2004

Tamper

Division Cannon Corp.
2601 Edmund Road—Box 20
Cayce—West Columbia,
S.C. 29171-0020
(803) 794-9180

68458

PARTS LIST

FIG	ITEM NO	PART NUMBER	DESCRIPTION (29)	AA	AB	AC	AD	AE	AF	AG				
				ASSEMBLY IDENTIFIER										
				QUANTITY										
	~~133~~	~~0-3304143-0-11~~	~~2" SPLIT FLANGE JIC STR~~	1										
	~~134~~	~~0-3304142-0-06~~	~~2" SPLIT FLANGE MTG KIT~~	5	5	5	5							
	135	0-3304142-0-04	1¼ SPLIT FLANGE MTG KIT	1	1	1	0	0	0	1				
	136	0-3304142-0-03	1" SPLIT FLANGE MTG KIT	2	2	2	2	2	2	2				
	137	0-3304142-0-02	¾ SPLIT FLANGE MTG KIT	1	1	1	0	0	0	1				
	~~138~~	~~0-3304212-0-01~~	~~2" SUCTION FITTING~~	2	2	2	2							
	139	L423607	PLASTIC TUBE (FT)	6	6	6	6	6	6	6	Ft			
	~~140~~	~~L423611~~	~~⅛ MP ¼ BARB TUBE 90°~~	1										
	~~141~~	~~0-3305020-0-03~~	~~2" OD HYD TUBING~~	8.5	8.5	8.5	8.5				Ft			
	~~142~~	~~0-3304121-0-13~~	~~2" TUBE SLEEVE~~	3	3	3	3							
	~~143~~	~~0-3304120-0-12~~	~~2" TUBE NUT~~	3	3	3	3							
	~~144~~	~~0-3304150-0-12~~	~~2" WELD FLANGE~~	2	2	2	2							
	145	0-3305018-0-06	1" OD HYD TUBING	10	10	16	16	16	16	0	Ft			
	146	0-3304121-0-10	1" TUBE SLEEVE	10	10	14	14	14	14	0				
	147	0-3304120-0-09	1" TUBE NUT	10	10	14	14	14	14	0				
	148	0-3305019-0-01	1¼ OD HYD TUBING	8	8	10	10	10	10	0	Ft			
	149	0-3304121-0-11	1¼ TUBE SLEEVE	4	4	6	6	6	6	0				
	150	0-3304120-0-10	1¼ TUBE NUT	4	8	6	6	6	6	0				
	151	0-3305018-0-03	½ OD HYD TUBING	7	7	7	7	7	7	0	Ft			
	152	0-3304121-0-06	½ TUBE SLEEVE	8	8	8	8	8	8	0				
	153	0-3304120-0-06	½ TUBE NUT	8	8	8	8	8	8	0				
	154	0-3305018-0-02	⅜ OD HYD TUBE	11	11	12	12	12	12	0	Ft			
	155	0-3304121-0-05	⅜ TUBE SLEEVE	8	8	10	10	10	10	0				
	156	0-3304120-0-05	⅜ TUBE NUT	8	8	10	10	10	10	0				
	157	0-3305018-0-01	¼ OD HYD TUBE	9	9	9	9	9	9	0	Ft			
	158	0-3304121-0-03	¼ TUBE SLEEVE	8	8	8	8	8	8	0				
	159	0-3304120-0-03	¼ TUBE NUT	8	8	8	8	8	8	0				
	160	0-3305023-0-01	1 HOLE CLAMP (3" SERIES)	4	4	5	5	5	5	5				
	161	0-3305023-0-02	2 HOLE CLAMP	2	2	2	2	2	2	2				
	162	0-3305024-0-18	STACKING NUT	16	16	18	18	18	18	18				
-16	163	0-3305024-0-08	SPLIT BUSHING 1½ TUBE	2	2	4	4	4	4	4				
-20	164	0-3305024-0-16	SPLIT BUSHING 1½ PIPE	8	8	8	8	8	8	8				
	165	L424550	⅜ "O" RING - ½ JIC 90°	1	1	1	1	1	1	1				
				TRIO PHASE III		30 MPH LOAD SENSING	30 KPH NON-LOAD SENSING	TRIO 4-53T 30 MPH NON-LOAD SENSING	TRIO DEUTZ 24VDC 30 MPH NON-LOAD SENSING	TRIO CUMMINS ENG. 30 MPH NON-LOAD SENSING	TRIO CUMMINS ENG. TIER II	TRIO 30 MPH N.L.S.	TRIO NS 2004	

REVISIONS

NO	ER	DESCRIPTION	DR	CK	APP	MF
4	4816	REPLACES REVISION 3 QTY ITEM 134 WAS 3 ADDED ITEM 165	KK		Hawk	
9	—	NO CHG.				
10	ECR 12 5453.5	DELETED IT140, ASSY AA; RELEASE ASSY AB	KRD	RJ	Hawk	
	ECR 5460.2	IT#144 QTY WAS 1, DELETED IT#133	MM	RJ	Hawk 2-13-91	
11	5572.2	IT 150 QTY WAS 4	MM	RJ	Hawk	
17	6142.6	DELETED ASSY: AB; RELEASED ASSY: AC 12-17-92	HH	RJ		
20	7779.2	DELETED IT. 134, 138 AND 141-144. 10-20-95 IT. 160 AND 161 QTY WERE 6 AND 3.	HH	JC	Hawk	
24	12285	NO CHG. ADDED TAB-AE. 11-16-00	HH	HH	HW	
AB	100250	TABS AC THRU AF: 1-6-06 ITEMS 145, 146 & 147 QTY WERE 10. ITEMS 148, 149 & 150 QTY WERE 8, 4 & 4.	HH	DDB		

ASSEMBLY DESCRIPTION

ER	5453.5	6142.6	6529.6	12285	13050	13080		
DR	MM	HH	HH 7-18-92	HH 11-16-00	HH 3-10-04	MM 9/14		
CK	RJ 2-13-91	RJ	RJ 2-13-91	HW	RJB 3-25-04	HH		
APP		LCS	Hawk	HW		DDB		
MF								

Tamper

Division Cannon Corp.
2401 Edmund Road–Box 20
Cayce–West Columbia,
S. C. 29171-0020
(803) 794-9160

ENG DWG NO: A8998V
SHEET: 5
CONT ON: 6
DESCRIPTION (30): HYDRAULIC ASSY
DRAWN: [illegible]
DATE: 2-7-89
CHECKED
DATE
APP
DATE
APP
DATE

SHEET 5 CONT ON ENG DWG NO 6 A8998V

ENGS-34

68456

PARTS LIST

FIG	ITEM NO	PART NUMBER	DESCRIPTION (29)	~~AA~~	~~AB~~	AC	AD	AE	AF	AG				
				ASSEMBLY IDENTIFIER / QUANTITY										
	166	0-3305021-0-01	1 HOLE CLAMP (2" SERIES)	2	2	2	2	2	2	2				
	167	0-3305021-0-02	2 HOLE CLAMP	9	9	7	7	7	7	7				
	168	0-3305022-0-21	STACKING NUT	18	18	12	12	12	12	12				
	169	0-3305022-0-22	THREAD ADAPTER	8	8	8	8	8	8	8				
	170	0-3305022-0-18	1" JIC JUNCT ADAPT	3	3	3	3	2	2	3				
	171	0-3305022-0-14	1/2 JIC JUNCT ADAPT	2	2	2	2	2	2	2				
	172	0-3305022-0-13	3/8 JIC JUNCT ADAPT	4	4	4	4	4	4	4				
	~~173~~	~~0-3305022-0-19~~	~~1/4 JIC JUNCT ADAPT~~	4	4	4	4	—	—	—				
-4	174	0-3305022-0-05	SPLIT BUSHING 5/8 TUBE	2	2	2	2	0	0	2				
-8	175	0-3305022-0-07	SPLIT BUSHING 7/8 TUBE	2	2	2	2	0	0	2				
	176	L420493	TIE WRAPS	10	10	10	10	10	10	10				
	177	Z766621-001	BROOM HOSE 14" LG	6	6	6	6	6	6	6				
	178	L40387	3/8-16 LOCK NUT	6	6	12	12	12	12	12				
	179	0-3307004-0-08	GAUGE: (0-3000 PSI)	2	2	2	2	2	2	2				
	180	BLANK		-	-	-	-	-	-	-				
	181	B4170XAA	BOOM	1	1	1	1	1	1	0				
	182	B4171XAA	BOOM	1	1	1	1	1	1	0				
	183	0-3641001-0-31	SPRING (2" DIA X 74" LG)	1	1	1	1	1	1	0				
	184	L421705	1/4 JIC BULK-HEAD 90	10	10	12	12	12	12	12				
	185	L420356	1/2 JIC BULK HEAD 90	5	5	5	5	5	5	5				
	186	L420813	1" JIC BULK HEAD 90	2	2	2	2	2	2	2				
	187	0-3305012-0-02	1" SUCTION HOSE	7	7	4	4	REF	REF	REF				
	188	0-3304171-0-02	BAND CLAMP ($1\frac{13}{32}$-$1\frac{21}{32}$ ID)	4	4	4	4	4	4	4				
	189	0-3304174-0-03	1" KING NIPPLE	1	1	1	1	0	0	1				
	190	L40076	1" MP-FP ELBOW	1	1	1	1	0	0	1				
	191	0-3304079-0-01	3/8 JIC SW-3/8 FP	2	1	1	1	0	0	1				
	192	0-3321020-0-01	GEAR MOTOR	1	1	1	1	1	1	1				
	193	A3441Y02	FAN 1" BORE	1	1	1	1	1	1	1				
	194	A3368Y01	GUARD SCREEN, TOP	1	1	1	1	1	1	1				
	195	A3367Y01	GUARD SCREEN, BOTTOM	1	1	1	1	1	1	1				
	196	B0891YAA	MOTOR MOUNT, FAN	1	1	1	1	1	1	1				
	~~197~~	~~A3342Y01~~	~~RUBBER PAD~~	8	8	—	—	—	—	—				
	198	A3468XAA	GUARD SCREEN, OUTSIDE	1	1	1	1	1	1	1				
						TR-10 PHASE II	OVER-HEAD CAMMS 24 VDC LOAD SENSING	TR-10 4-53T 24 VDC 30 MPH NON-LOAD SENSING	TRIO DEUTZ 24 VDC 30 MPH NON-LOAD SENSING	TRIO CUMMINS ENG. 30 MPH NON-LOAD SENSING	TRIO CUMMINS ENG. TIER II	TR 10 30 MPH N.I.S.		

REVISIONS

SHEET	NO	ER	DESCRIPTION	DR	CK	APP	MF
	4	4816.	REPLACES REVISION 3 QTY IT. 184 WAS 4 QTY ITEM 185 WAS 4	KK		Hawk	
	5	4872.1	QTY ITEM 183 WAS 2 4-28-89	KK		Hawk	
	7	4781.6	QTY ITEM 184 WAS 12 4-1-90	KK		Hawk	
	8	5252.3	QTY ITEM 191 WAS 1. QTY ITEM 197 WAS 4. 6-4-90	KK		Hawk	
6	9	—	NO CHANGE				
	10	5455.1	DELETE ASSY AA; RELEASE ASSY AB	HH		Hawk	
7	11	5572.2	IT #191 QTY WAS 2 3-8-91	HH	RS	Hawk	
	15	6028.1	DELETED IT. 197 8-5-92	HH		Hawk	
	17	6162.6	DELETED ASSY: AB; RELEASED ASSY: AC. 12-17-92	HH			
	19	6444.1	IT. 178 QTY. WAS 6. 1-7-94	HH		Hawk	
	20	7779.2	IT. 167, 168, 184 & 187 QTY WERE 9, 18, 10 & 7. DELETED IT. 173. 10-20-95	HH		Hawk	
	22	8828.1	IT. 178 WAS QTY. 10 ON AC&AD 03-26-97	DAS			
	24	12285 .1	NO CHG. ADDED TAB-AE 11-16-00	HH			
	AA	13080 .14	TAB-AG, DELETED ITEMS 181, 182 & 183. 10-14-04	HH			
	AB		NO CHG.				

ASSEMBLY DESCRIPTION

ER	5973.5	6121.7	6329.6	12285 .1	12285 .8	13080 .5	13080							
DR	HH	HH	HH	HH	HH	HH	HH							
CK														
APP														
MF														

END DWG NO: A89998V

SHEET 6 CONT ON 7

DESCRIPTION (30): HYDRAULIC ASSY

DRAWN: Howard Schwab

DATE: 2-7-89

CHECKED

DATE

APP

DATE

DATE

END DWG NO: A89998V

Tamper
246 Edmund Road—Box 20
Cayce-West Columbia
S.C. 29171-0020
(803) 794-9160

ENGS 34

68436

PARTS LIST

ENG DWG NO: A8998V

SHEET: 7 CONT ON: 8

DESCRIPTION (30): HYDRAULIC ASSY

DRAWN: [illegible] DATE: 27-89 CHECKED: DATE: APP: DATE: APP: DATE:

FIG	ITEM NO	PART NUMBER	DESCRIPTION (29)	AA	AB	AC	AD	AE	AF	AG				
				QUANTITY										
	199	Z753210-007	KEY	1	1	1	1	0	0	1				
	200	A0036067	3/8-16 X 1 1/4 HEX HD SCR	2	2	2	2	2	2	2				
	201	A0059003	3/8 - FLAT WASHER	2	2	6	6	6	6	6				
	~~202~~	~~L40387~~	~~3/8-16 LOCK NUT~~	~~4~~	~~4~~	~~4~~	~~4~~							
	203	A0036038	5/16-18 X 2 HEX HD SCR	2	1	1	1	1	1	1				
	204	A0059002	5/16 FLAT WASHER	10	9	9	9	9	9	9				
	205	L40388	5/16-18 LOCK NUT	2	1	1	1	1	1	1				
	206	A0036035	5/16-18 X 1 1/4 HEX HD SCR	10	10	16	16	16	16	16				
	207	L41863	3/8 BEVEL WASHER	8	8	8	8	8	8	8				
	208	A0036125	1/2-13 X 2 HEX HD SCR	4	4	4	4	4	4	4				
	209	A0036126	1/2-13 X 2 1/4 HEX HD SCR	4	4	4	4	4	4	4				
	210	L41243	1/2 BEVEL WASHER	8	8	8	8	8	8	8				
	~~211~~	~~L425389~~	~~1/4 MP - FP MP TEE~~	~~1~~	~~1~~									
	~~212~~	~~A1215Y04~~	~~VALVE SOL, DOZ~~	~~1~~										
	~~213~~	~~A1070Y11~~	~~RELIEF, SUB-PLATE MOUNT~~	~~1~~										
	~~214~~	~~Y769728-001~~	~~SUB-PLATE, DOZ, 1/2 NPT~~	~~1~~										
	215	L425922	1/2 PIPE PLUG HEX SOC	1	1	1	1	1	1	1				
	216	L420004	1/2 MP - JIC 90°	3	3	1	1	1	1	1				
	217	L420443	1/2 MP - JIC LONG 90°	3	3	3	3	3	3	3				
	218	TY753789-273	SQ BAR 1/2 X 1/2 X 1 1/4	6	6	6	6	6	6	6				
	~~219~~	~~L411375~~	~~3/4 MP - 1/2 JIC STR~~	~~2~~	~~2~~									
	220	L423158	1/4 MP - JIC EX LONG 90	2	2	2	2	0	0	2				
	221	0-3304180-0-04	1/2 JIC SW - JIC 45°	2	2	2	2	2	2	2				
	222	A0036009	1/4-20 X 2 HEX HD SCR	4	4	4	4	4	4	4				
	223	L40237	1/4 LOCK NUT	4	4	4	4	4	4	4				
	224	L41233	ANCHOR FLANGE KIT	2	2	2	2	2	2	2				
	225	L421702	3/8 BULKHEAD 90°	19	19	19	19	19	19	19				
	226	L411844	3/8 MP HOSE (FT)	195	215	228	228	REF	REF	REF				
	~~227~~	~~B7012WCH~~	~~HOSE BRACKET~~	~~2~~	~~2~~	~~2~~								
	~~228~~	~~A0036010~~	~~1/4-20 X 2 1/4 HX HD CP SCR~~	~~3~~	~~3~~	~~3~~								
	~~229~~	~~A0061008~~	~~1/4 LOCK WASHER~~	~~3~~	~~3~~	~~3~~								
	230	0-3304057-0-11	3/8-JIC SW - JIC - JIC TEE	1	0	0	0	0	0	0				
	231	L425403	3/8 MP - 1/4 MP STR	1	2	2	2	2	2	2				
				ASSEMBLY DESCRIPTION										
				~~TRIO PHASE III 30 MPH LOAD SENSING~~	~~DOCK-LEAD CART 24 VDC 30 MPH LOAD SENSING~~	TRIO 4-53T 30 MPH NON-LOAD SENSING 24 VDC	TRIO DEUTZ 24 VDC 30 MPH NON-LOAD SENSING	TRIO CUMMINS ENG. 30 MPH NON-LOAD SENSING	TRIO 30 MPH N.L.S. CUMMINS ENG. TIER II	TRIO NS 2004				

REVISIONS

NO	ER	DESCRIPTION	DR	CK	APP	MF
4	4816	REPLACES REVISION 3. ADDED ITEMS 225 & 227 DELETED ITEMS 212, 213, & 214. QTY ITEM 202 WAS 8	KK		Hawk 3-21-89	
5	4842,16	ADDED ITEMS 227 - 229 4-28-89	KK		Hawk	
7	4789,6	QTY ITEM 225 WAS 17 4-1-90	KK		Hawk	
8	5252,3	ADDED ITEMS 230 & 231. QTY IT. 216 & 217 WAS 1	KK		Hawk	
9	—	NO CHANGE				
10	5455,1,3	DELETE ASSY AA; RELEASE ASSY AB	MH		Hawk	
11	5572,2	IT 230 & 231 QTY WAS 1 3-8-91	MH	RJ	Hawk	
12	5579,9	QTY. IT. 231 WAS 0, QTY IT. 226 WAS 195	KRO	RJ	Hawk	
13	5767,1	DELETED IT. 219 4-9-91	KRO		Hawk	
14	5834,6	QTY IT 203, 204, & 205 WAS 2, 10 & 2 RESPECTIVELY. DEL IT 211. QTY IT 231 WAS 1,	SPB	RJ	Hawk 2-12-92	
17	6162,6	DELETED ASSY: AB; RELEASED ASSY: AC. 12-17-92	HH		Hawk	
18	6390,10	DELETED ITEM NO. 227 — 229 4-23-93	HH		Hawk	
19	6444,1	DELETED IT 202. MOVE QTY TO IT. 178. 1-7-94	HH		Hawk	
21	8441,1	IT 216, QTY WAS 3, ON TAB AC & AD 15 SEPT 96	CW		HH	
22	8928,1	IT. 201 WAS QTY. 2 ON AC & AD IT. 206 WAS QTY. 10 ON AC & AD 03-26-97	DAS		HH	
23	10178,1	IT. 226 WAS QTY 215	WV		HW	
24	12285,1	NO CHG. ADDED TAB-AE. 11-16-00	HH		NW	
AB		NO CHG.				

SHEET: 7 CONT ON: 8

ENG DWG NO: A8998V

ENG2-34

Tamper — Division Cannon Corp. — 2401 Edmund Road—Box 20, Cayce-West Columbia, S.C. 29171-0020, (803) 794-9160

PARTS LIST

FIG	ITEM NO	PART NUMBER	DESCRIPTION (29)	AA	AB	AC	AD	AE	AF	AG
				QUANTITY						
	232	A0758Y06	RESTRICTOR	1	0	0	0	0	0	0
	233	0-3330039-0-02	FILTER	1	0	0	0	0	0	0
	234	L420017	1/4 MP - 3/8 JIC 90	1	0	0	0	0	0	0
	235	0-3304057-0-03	1/2 JIC SW RUN TEE	1	1	1	1	1	1	1
	236	0-3304132-0-07	1" JIC SW - 3/8 JIC RED.	3	3	3	2	3	3	3
	237	0-3304192-0-02	3/8 JIC SW - 1/4 MP 90° ELBOW	4	4	4	3	4	4	4
	238	A8940 VAB	MAJOR VALVING MOD	0	1	0	0	0	0	0
	~~239~~	~~C2795X01~~	~~HYD FILTER MTG BKT~~	~~1~~	~~1~~	~~1~~	~~1~~			
	240	L423044	1" FP ELBOW 90°	0	1	1	1	0	0	1
	241	L423815	3/4 ORING - FP STR	0	1	1	1	0	0	1
	242	0-3304034-0-11	1 1/4 JIC - 3/4 JIC RED	0	4	4	4	4	4	4
	243	L420009	1" MP - 3/4 JIC 90°	0	2	2	3	3	3	2
	244	0-3304112-0-01	1/4 MP-FP-FP	0	1	1	1	1	1	1
	245	L420003	3/8 MP-JIC 90	0	1	1	1	1	1	1
	246	L41209	CHECK VALVE 3/8 FP 3 PSI	0	1	1	1	1	1	1
	~~247~~	~~L425696~~	~~3/8 ORB-1/2 JIC~~	~~0~~	~~2~~	~~2~~	~~2~~			
	248	0-3304017-0-02	3/8 ORB-1/4 JIC 90°	0	1	1	1	1	1	1
	249	0-3330053-0-01	SHUTTLE VALVE		1	1	1	1	1	1
	250	A5748Y01	IN-LINE HYD FILTER		1	1	1	1	1	1
	251	L411531	1/4 MP - JIC 45°		2	4	4	4	4	4
	252	L411379	3/8 MP - 1/4 JIC STR		1	1	1	1	1	1
	253	A0050060	#10-24 x 1-1/2 MACH SCREW		2	2	2	2	2	2
	254	A0061006	#10 LOCK WASHER		1	1	1	1	1	1
	255	A0059025	#10 FLAT WASHER		4	4	4	4	4	4
	256	A0036004	1/4-20 x 7/8 HEX HD CAP SCREW		10	10	10	10	10	10
	257	A0059001	1/4 MED. FLAT WASHER		4	4	4	4	4	4
	258	L41173	1/4-20 ESNA NUT		10	10	10	10	10	10
	259	A0958T45	CLAMP BAR		1	1	1	1	1	1
	~~260~~	~~0-3044005-0-04~~	~~1/4 x 1" GASKET (FT.)~~		~~5~~	~~5~~	~~5~~			
	261	0-3044005-0-01	7/16 x 1" GASKET (FT.)		5	10	10	10	10	10
	262	0-3305026-0-12	STACKING NUT		6	6	6	6	6	6
	263	0-3305022-0-08	SPLIT BUSHING		4	4	4	4	4	4
	264	0-3305025-0-02	2 HOLE CLAMP (1 1/2 SERIES)		2	2	2	2	2	2

ASSEMBLY IDENTIFIER

	AA	AB	AC	AD	AE	AF	AG
ASSEMBLY DESCRIPTION	~~TR-10 PHASE III 30 MPH NON-LOAD SENSING~~	~~TRIO 4-53 T 30 MPH NON-LOAD SENSING 24VDC~~	TRIO DEUTZ 24 VDC 30 MPH NON-LOAD SENSING	TRIO CUMMINS ENG. 30 MPH NON-LOAD SENSING	TRIO CUMMINS BIG TIER II 30 MPH N.L.S.	TRIO 30 MPH N.L.S. 2004	
ER	5453.5	6112.6	6379.6	12285	13050	13080	
DR		HH	HH	HH			
CK							
APP		LCS					
MF							

- REVISIONS

NO	ER	DESCRIPTION	DR	CK	APP	MF
8	5552.3	RELEASED. SHT. 8	KK		Hawk	
9	5702.1	ADD IT# 235 - 237 9-21-90			Hawk	
10	ECR 5453.1,3,5	DELETE ASSY AA; RELEASE ASSY AB			Hawk	
	ECR 5460.2	ADD IT# 239 2-13-91			Hawk	
11	5572.2	ADD IT 240-243, IT#232-234 QTY WAS 1			Hawk	
12	5572.9	ADD IT. 244-246 6-20-91	KEO		Hawk	
13	5767.1	ADD ITS. 247+248 9-9-91	KEO		Hawk	
14	5834.6	ADDED IT. 249-258 2-12-92	SPB		Hawk	
15	6038.1	ADDED IT. 259 260 261 8-5-92 IT. 256 QTY. WAS 4, IT. 258 QTY. WAS 4	HH		Hawk 8-12-92	
16	6082.3	ASSY AB: ADDED IT. 262-264. 10-20-92	HH		Hawk	
17	6162.6	DELETED ASSY: AB; RELEASED ASSY: AC. 12-17-92	HH			
20	7779.2	DELETED IT. 239 & 260, IT. 261 QTY WAS 5, 10-20-95	HH		Hawk	
21	8441.1	IT 251, QTY WAS 2 ON TAB AC&AD 11 SEPT 96	AW			
22		NO CHANGE				
23	10178.1	DELETED IT-247	WJV	HW		
24	12285	NO CHG. ADDED TAB AE.	HH			
AB		NO CHANGE				

TAMPER CORP.
2401 Edmund Road-Box 20
Cayce-West Columbia
South Carolina 29171-0020
Tel. (803) 794-9160

END OWG NO: A8998V
SHEET: 8 CONT ON: 9
DESCRIPTION (30): HYDRAULIC ASSY
DRAWN: Robert Kilpatrick
DATE: 5-29-90
CHECKED
DATE
APP'D: Hawk
DATE: 6-4-90
APP
DATE

ENGS-34

PARTS LIST

END DWG NO: A8998V

SHEET 9 ~ CONT ON

DESCRIPTION (30): HYDRAULIC ASSY.

DRAWN: HH

DATE: 12-17-92

CHECKED

FIG	ITEM NO	PART NUMBER	DESCRIPTION (29)	AA	AB	AC	AD	AE	AF	AG				
				ASSEMBLY IDENTIFIER / QUANTITY										
	265	A8940VAC	MAJOR VALVING MODULE	–	–	1	1	1	0	0				
	266	0-3304132-0-01	3/8 JIC SW – 1/4 JIC RED.	–	–	1	1	1	1	1				
	267	0-3305024-0-06	SPLIT BUSHING (1"-TUBE)	–	–	1	1	1	1	1				
	268	A8940VAD	MAJOR VALVING MODULE	–	–	–	–	–	1	0				
	269	Y753059ZH	3/4 HP HOSE ASSY (83")	–	–	–	2	0	0	0				
	270	Y754857ZL	1" MP HOSE ASSY (130")	–	–	–	2	0	0	0				
	271	L421701	1" O-RING BOSS/JIC 90°	–	–	–	2	0	0	0				
	272	L422812	3/4 O-RING BOSS/JIC STR.	–	–	–	2	0	0	0				
	273	L424593	1" TEE FP/FP/FP (PORTED)	–	–	–	1	0	0	0				
	274	L411408	1" CROSS FP	–	–	–	1	0	0	0				
	275	L40271	1" MP TO 1" FP SW ADAPTER	–	–	–	1	0	0	0				
	276	L420152	1" TO 1/2 REDUCER	–	–	–	1	0	0	0				
	277	L411737	1/2 TO 1/4 ST. ELBOW	–	–	–	1	0	0	0				
	278	L421704	1 1/4 MP-JIC 90°	–	–	1	1	1	1	1				
	279	L411391	1 1/4 FP TEE	–	–	1	1	1	1	1				
	280	L420104	1 1/4 MP – 3/4 FP REDUCER	–	–	1	1	1	1	1				
	281	L40306	3/4 MP HEX NIPPLE	–	–	1	1	1	1	1				
	282	L423611	1/8 BARBED FITTING 90°	–	–	1	1	1	1	1				
	283	L420270	1/2 O-RING BOSS/JIC 90°	–	–	2	2	2	2	2				
	284	0-3305012-0-06	2 1/2 SUCTION HOSE (FT)	–	–	6.6	6.6	REF	REF	REF				
	285	0-3304171-0-12	BAND CLAMP (2.86 – 3.21)	–	–	8	8	8	8	8				
	286	D7631Y01	HYD CLAMP HANGER BRKT	–	–	1	1	1	1	1				
	287	0-3305024-0-17	WELD ADAPTER	–	–	4	4	4	4	4				
	288	0-3305023-0-03	3 HOLE CLAMP (3" SERIES)	–	–	1	1	1	1	1				
	289	L424933	1/2 MP / 3/8 JIC 45°	–	–	1	1	1	1	1				
	290	0-3304115-0-08	3/4 ORB / 1 JIC 45°	–	–	2	2	2	2	2				
	291	G2732YAA	HOSE RACK CABLE	–	–	2	2	2	2	2				
	292	L420493	14" TIE WRAP	–	–	21	21	21	21	21				
	293	L423154	1/2 O-RING / 3/8 JIC 90°	–	–	2	2	2	2	2				
	294	L423023	3/4 JIC SWIVEL 90°	–	–	–	–	4	4	1				
	295	0-3304115-0-13	ORB – JIC 45° ADAPTER	–	–	–	–	4	4	0				
	296	L423154	ORB-JIC 90° ADAPTER	–	–	–	–	4	4	0				
	297	L425247	BAND CLAMP (1.72 – 1.91)	–	–	–	–	4	4	4				
						TRIO 4-53T 24 VDC 30 MPH NON-LOAD SENSING	TRIO DEUTZ 24 VDC 30 MPH NON-LOAD SENSING	TRIO CUMMINS ENG. 30 MPH NON-LOAD SENSING	TRIO CUMMINS ENG. TIER II	TRIO 30 MPH N.L.S.				

REVISIONS

NO	ER	DESCRIPTION	DR.	CK	APP	MF
17	6162.6	RELEASED ASSY: AC. 12-17-92 ADDED IT. 165-168.	HH			
20	7779.2	DELETED IT. 268, ADDED IT. 278-288. 10-20-95	HH			
21	8441.1	ADDED ITS. 289 + 290 11 SEPT 96				
22	8928.1	IT. 285 WAS 0-3304171-0-13 03-20-97 ADDED IT. 291 & 292	DAS			
23	10178.1	ADDED IT-293	VJV			
24	12285.1	NO CHG. ADDED TAB-AE. 11-16-00	HH			
AB		NO CHANGE				

SHEET 9 ~ CONT ON

END DWG NO: A8998V

ASSEMBLY DESCRIPTION

ER		6162.6	6179.1	12285.1	13050.8	13080.5				
DR		HH	HH 8-18-92	HH 11-16-00	7-15-04	MT 8/1/09				
CK					8-23-04					
APP		LES								
MF										

TAMPER CORP.
2401 Edmund Road-Box 20
Cayce-West Columbia
South Carolina 29171-0020
Tel. (803) 794-9180

ENGS-34

ENG. DWG. NO. A8998V

REVISIONS							
NO	ER	DESCRIPTION	ZONE	DR	CK	APP	MF
17	8191.4	RELEASED ASSY/AC 12-14-92		HH	DAF	CES	
18	8241.1	DELETED IT 221 & 222, ADDED 223, 224 4-26-93	J-4	HH	DAF		
21	8641 .1	IT 119 WAS 120, IT 114 WAS 115 ADDED IT 289, IT 251 WAS 72	C-3 C-3 E-2	CDL	DAF	DAF	8-26-96
22	8783.1	ADDED IT 291 & 292 10-24-97	D6, D8 B8	CAS	DAF	DAF	
24	12285 .1	IT-75 WAS 63. REMOVED FITTINGS FROM VIEW, MOTOR. IT-92 AND 150. ADDED IT-294. ADDED CORRECT FITTINGS TO EXCHANGE IT-288 & 286	C2 H2	HH	DAF	DAF	
25	13388 .1	TRACTION ASSIST VALVE WAS DBL. SOL. 7-14-01	C-3	STA	DAF	DAF	
Z	13000 .0	ADDED ITEM 268. 3-15-04	F-4	DAF	DAF		
AB		No CHG.					

SECTION J-1

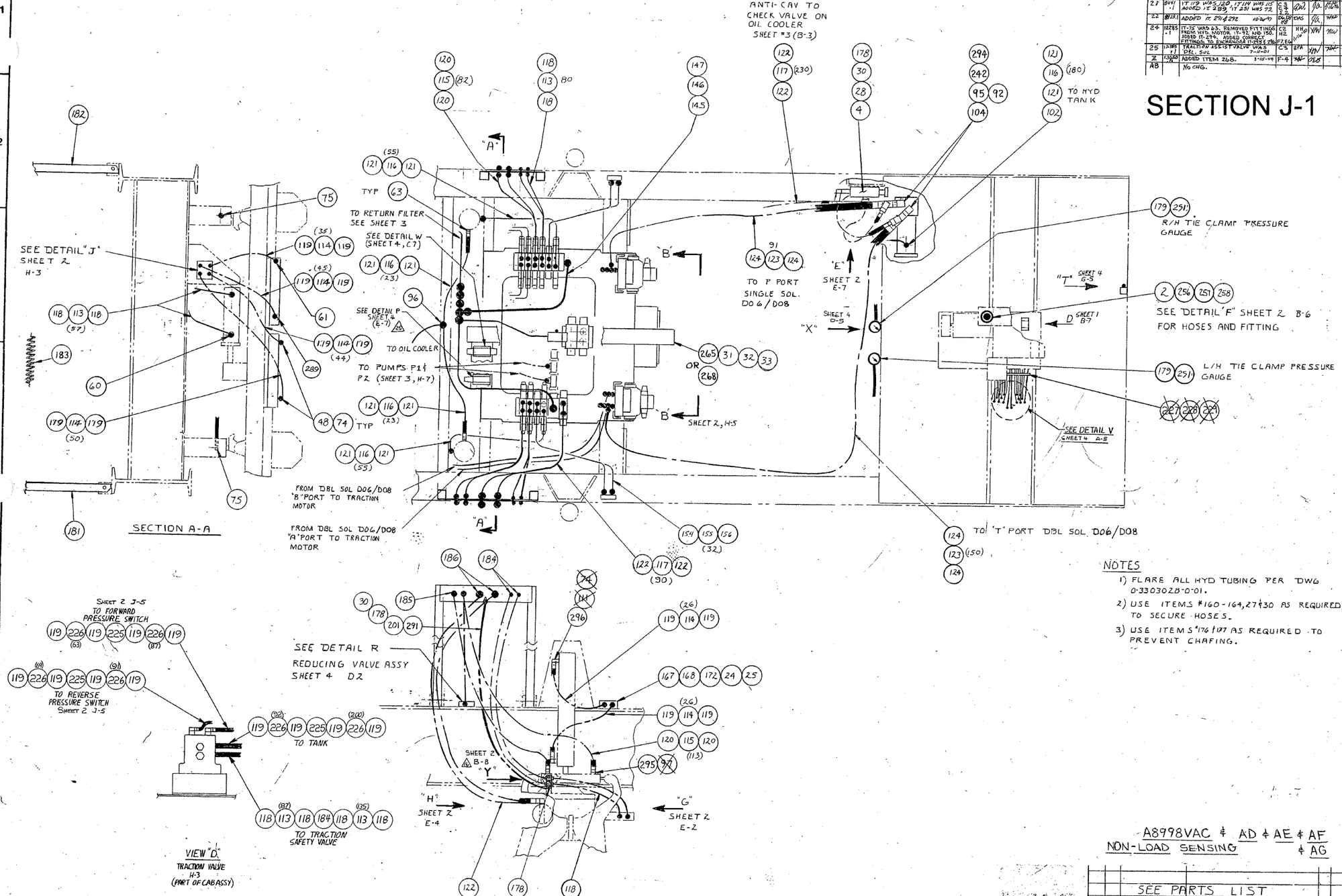

NOTES

1) FLARE ALL HYD TUBING PER DWG 0-3303028-0-01.
2) USE ITEMS #160-164, 27 & 30 AS REQUIRED TO SECURE HOSES.
3) USE ITEMS #176 & 177 AS REQUIRED TO PREVENT CHAFING.

A8998VAC & AD & AE & AF & AG
NON-LOAD SENSING

SEE PARTS LIST

FIG NO.	ITEM NO.	PART NUMBER	DESCRIPTION AND MATERIAL SIZE (REF ONLY)	QTY

IMPLIED TOLERANCES — ALL DIMENSIONS ARE IN INCHES • TOLERANCE UNLESS OTHERWISE SPECIFIED

JOURNAL SIZE RANGE		PLUS OR MINUS			BENDING SIZE RANGE		PLUS OR MINUS		
OVER	TO	FRACTION	2 PLACE DECIMAL	3 PLACE DECIMAL	OVER	TO	FRACTION	2 PLACE DECIMAL	3 PLACE DECIMAL
—	1	1/64	.01	.005	0	6	3/64	.03	.008
1	6	1/32	.02	.005	24	—	1/16	.06	.015

AMERICAN DIMENSIONS PLUS OR MINUS 1 DEGREE
ALL MACHINED SURFACES TO HAVE A SURFACE FINISH OF 125 MICROINCHES UNLESS OTHERWISE SPECIFIED

NON-LOAD SENSING ONLY

WEIGHT lbs.

DO NOT SCALE

3/8 HOLE PROJECTION

LAST ITEM NO. USED

DESCRIPTION (IN) HYDRAULIC ASSY
DRAWN HH DATE 12-18-92
MACHINE TYPE 30 MPH 24 VDC TRIO III TRX VALVES
CHECKED DAF DATE 1-12-93
APPROVED DATE
APPROVED DATE
Tamper
Chicago Cutter Co.
SHEET 1 COPY 2
ENG. DWG. NO. A8998V

THIS DOCUMENT CONTAINS PROPRIETARY INFORMATION AND SUCH INFORMATION MAY NOT BE DISCLOSED TO OTHERS NOR MAY IT BE USED FOR MANUFACTURING PURPOSES WITHOUT THE WRITTEN PERMISSION OF TAMPER.

END. DWG. NO. A8998V

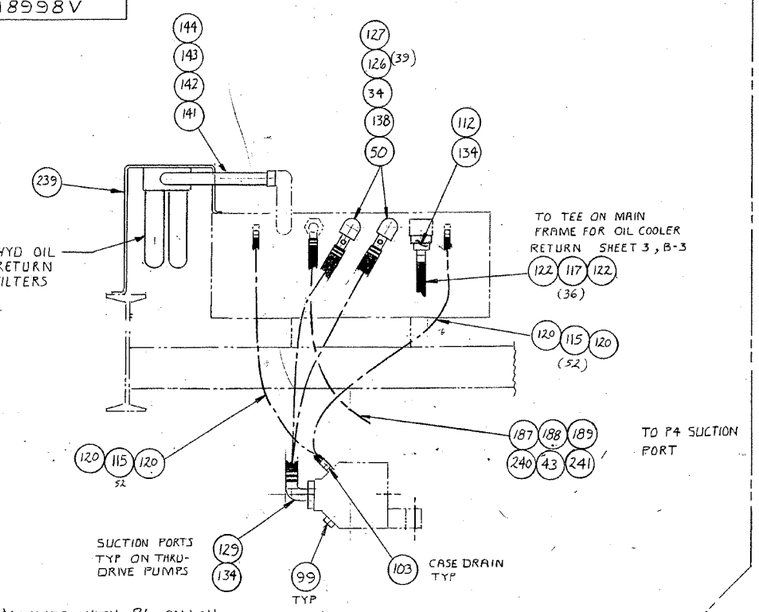

FOR MACHINES WITH 86 GALLON CAPACITY HYDRAULIC TANK

ENDING WITH KCS S/N-5591754 (PLUS CPR S/N-5591784)

SECTION M-M

HYD TANK & PUMPS P1 & P2 ROTATED 90° CCW

SHEET 3, F-3,4

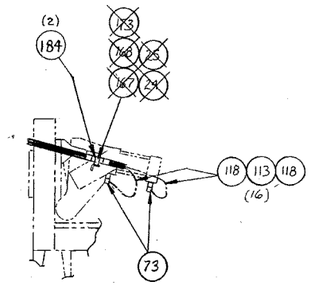

VIEW "G"

SWIVEL HEAD HOSING TYP

SHEET 1, E-7

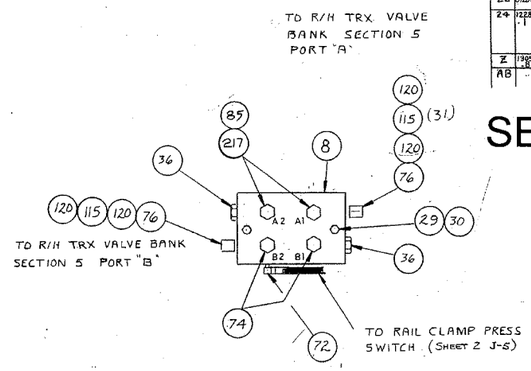

SECTION J-1

DETAIL "J"

RAIL CLAMP MANIFOLD

SHEET 1, B-3

REVISIONS								
NO	ER	DESCRIPTION	ZONE	DR	CK	APP	MF
17	11-12	RELEASED ASSY: AC 12-18-92		HH	RR	LES	
20	11779 -2	BLOCKED IN SECTION "M-M" AND ADDED DESCRIPTIVE TITLE. DELETED ITEMS ON VIEW "G" AND ADDED IT. 184. ADDED IT. 282 AND NEW ROUTING.	C-4 E-2 K-5	HH 10-8-93	JG	LES 11-17-93	
21	5441 -1	VIEW "H" IT. 290 WAS 5.4, 5.5 AND IT. 34, DETAIL J: ADDED IT. 85, IT. 34 WAS 2/4	A-2 H-2	AW	JG	11-17-93	
22	12134	ADDED IT. 226 TO VIEW "H" 12-16-93	A7	DMG	JG	HH	
24	12285 -1	REMOVED UNNEEDED FITTINGS FROM 30V STICK DETAIL "E". PICTORIAL UPDATE TO VIEW "E", AND ADDED IT. 7. PICTORIAL UPDATE TO VIEW "B-B", ADDED HARD LINE AND IT. 119 & 226.	B5	HH 11-14-95	RR 5-5-96	AW 5-6-96	
Z	13650 B	ITEM 73 WAS 76 & 84. 3-15-98	E-3	HH	DMD		
AB	"	NO CHG.					

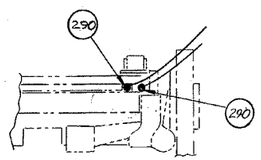

VIEW "H"

EXCH CYL

SHEET 1, D-7

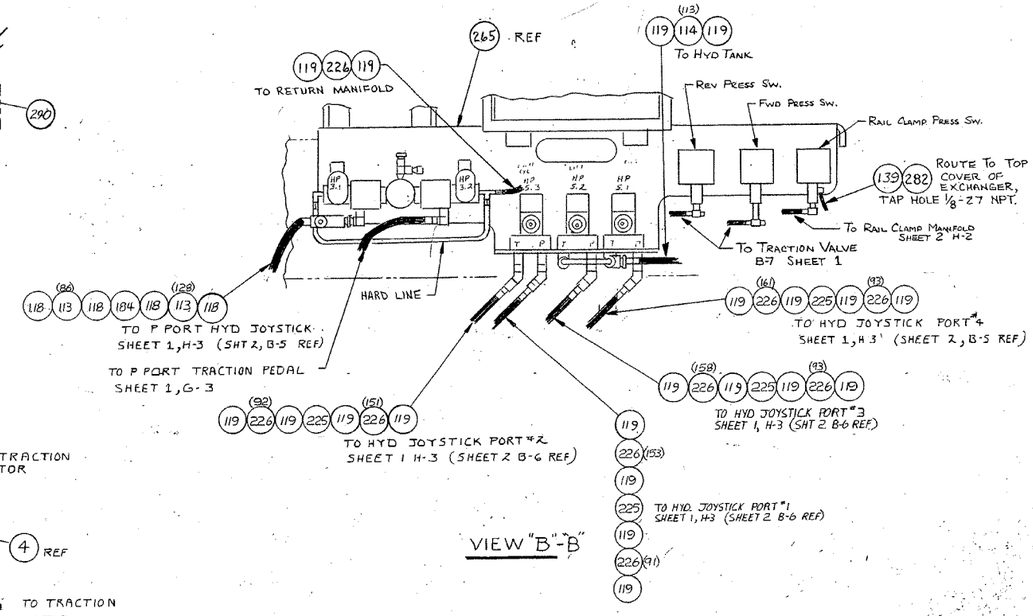

VIEW "B"-"B"

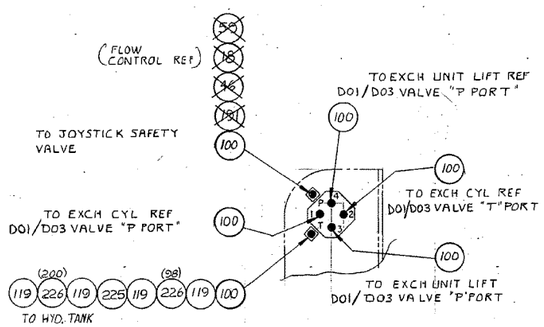

DETAIL "F"

HYD JOYSTICK AS VIEWED FROM BOTTOM

SHEET 1, H-3

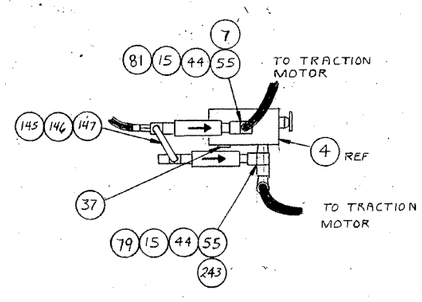

VIEW "E"

REAR TOWING VALVE

SHEET 1, G-3

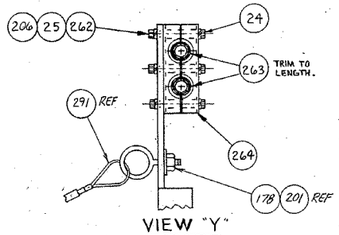

VIEW "Y"

SWIVEL HEAD HOSING TYP.

SHEET 1, D7

A8998VAC & AD & AE & AF & AG

NON-LOAD SENSING

FIG NO.	ITEM NO.	PART NUMBER	DESCRIPTION AND MATERIAL SIZE (REF ONLY)	QTY
			SEE PARTS LIST	

IMPLIED TOLERANCES — ALL DIMENSIONS ARE IN INCHES - TOLERANCE UNLESS OTHERWISE SPECIFIED

NOMINAL SIZE RANGE		PLUS OR MINUS			NOMINAL SIZE RANGE		PLUS OR MINUS		
OVER	TO	FRACTION	2 PLACE DECIMAL	3 PLACE DECIMAL	OVER	TO	FRACTION	2 PLACE DECIMAL	3 PLACE DECIMAL
–	1	1/64	.01	.005	6	24	3/64	.03	.005
1	5	1/32	.02	.005	24	–	1/16	.05	.010

ANGULAR DIMENSIONS PLUS OR MINUS 1 DEGREE

ALL MACHINED SURFACES TO HAVE A SURFACE FINISH OF 125 MICROINCHES UNLESS OTHERWISE SPECIFIED.

NON-LOAD SENSING ONLY

WEIGHT

DO NOT SCALE

THIRD ANGLE PROJECTION

LAST USED ON

DESCRIPTION AND NOUN: HYDRAULIC ASSY

DRAWN HH DATE 12-18-92

CHECKED DATE 1-11-93

APPROVED DATE

APP MFG DATE

MACHINE TYPE 30 MPH 24 VDC TRIO III TRX VALVES

Tamper

Dalman Control Corp.

SHEET 2 OF CONT. 3

END. DWG. NO. A8998V

THIS DOCUMENT CONTAINS PROPRIETARY INFORMATION AND SUCH INFORMATION MAY NOT BE DISCLOSED TO OTHERS FOR ANY PURPOSE OR USED FOR MANUFACTURING PURPOSES WITHOUT THE WRITTEN PERMISSION OF TAMPER.

ENG. DWG. NO. A8998V

REVISIONS							
NO	ER	DESCRIPTION	ZONE	DR	CK	APP	MF
17	9811-6	RELEASED ASSY-AC 12-21-92		HH		LES	
19	9911-1	ITEM 41 WAS IT. 47 1-7-93	C-7	HH			
20	1779	PICTORIAL UPDATE. IT. 79 WAS 86	B-2	HH			
	2	IT. 281 WAS 77 AND ADDED	B-1				
		ADDITIONAL FITTINGS.					
		IT. 56 & 278 WERE 55 & 55.	C-2				
		REMOVED IT. 65 & 79.					
		ADDED IT. 122 & 117.	C-4				
		DELETED RETURN FILTER AND	G-2				
		ASSOCIATED ITEMS.	H-2				
		REMOVED IT. 160, 161 & 268.	G-6				
		ADDED IT. 286, 287 & 288.					
24	12285	SECTION K-K REMOVED FITTINGS.	E4	HH			
	1	HYD MOTOR REMOVED IT-92 & 150.	D4				
		UPDATED VIEW "L" FOR CUMMINS.	C5				
		UPDATED TOW VALVE PICTORIALLY.	D7				
		ADDED IT. 283 TO PUMPS P1 & P2.	F7				
		ADDED VIEW-C P3 FOR CUMMINS.	K6				
AB	10250	ITEMS 145 THRU 150, HARDLINES	B2				
		ON OIL COOLER WERE MOVED.					
		ADDED ITEM 91.	D2				
		ITEM 6 WAS 101. 1-6-06	H6				

SECTION J-1

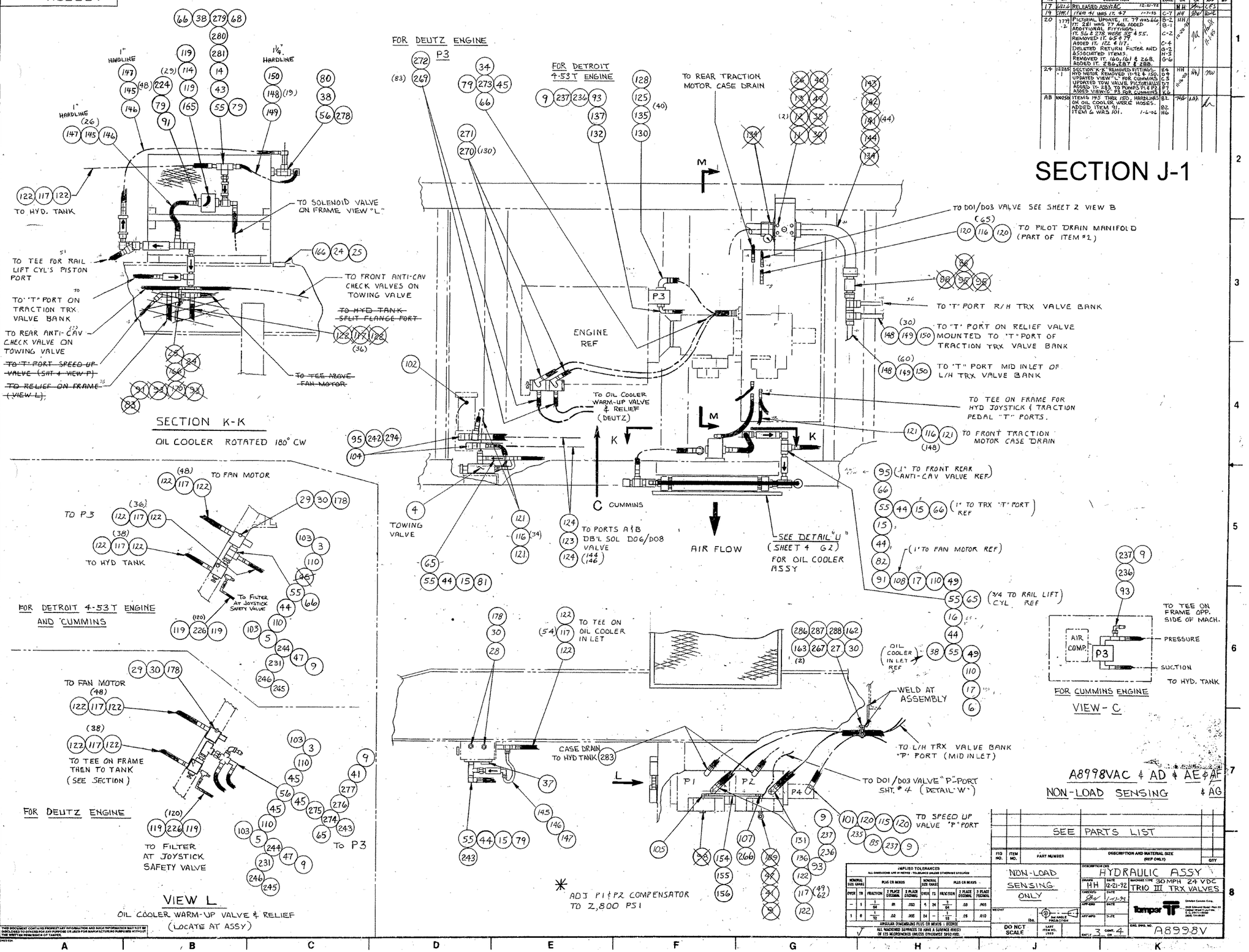

A8998VAC & AD & AE & AF & AG

NON-LOAD SENSING

FIG NO.	ITEM NO.	PART NUMBER	DESCRIPTION AND MATERIAL SIZE (SEP ONLY)	QTY
		SEE PARTS LIST		

NON-LOAD SENSING ONLY

DO NOT SCALE

DESCRIPTION (30) HYDRAULIC ASSY TRIO III TRX VALVES

DRAWN HH DATE 12-21-92

MACHINE TYPE 30 MPH 24 VDC

Tamper

Simplex Cannon Corp. 2400 Edmond Road - Pkwy 23 Minneapolis, MN 55422 U.S. (877) 1-4SCC (800) 791-8620

ENG. DWG. NO. A8998V

SHEET 3 OF 4

THIS DOCUMENT CONTAINS PROPRIETARY INFORMATION AND SUCH INFORMATION MAY NOT BE DISCLOSED TO OTHERS FOR ANY PURPOSE OR USED FOR MANUFACTURING PURPOSES WITHOUT THE WRITTEN PERMISSION OF TAMPER.

DWG. NO. A8998V

REVISIONS								
NO	ER	DESCRIPTION	ZONE	DR	CK	APP	MF
17	4162.6	RELEASED ASSY: AC 12-21-92		HH	CW	CES	
19	4291.1	IT. 178 WAS 202. 1-7-94	G-1	HH	CW	HGW	
20	5770	IT. 261 WAS 260 10-20-95	F1,F3	HH	CW	[illegible]	
		ADDED SHEET 5.					
23	10178	REVERSED POSITIONS OF PORTS	C-2	3-21-96			
		H3 AND 2&4, ADDED IT-218		VJV	HH	HH	
		DETAIL R.					
25	12350	B PORT WAS PLUGGED DETAIL P	E-7	SP#	HH	HH	
		STARTS WITH MACH. R255 7-12-01					
AA		NO CHANGE					
AB	100260	DETAIL-R, PORT 4. 1-6-04	E-1	HH	HH		
		(NEW ROUTE) ROUTE TO					
		SHUTTLE VLV VIEW-X.	D-5				

SECTION J-1

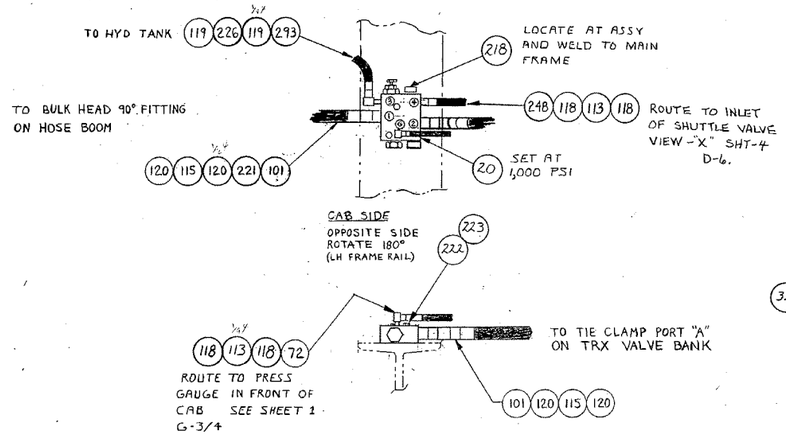

DETAIL R

TIE CLAMP PRESS REDUCING VALVE ASSY

SHEET 1, D-6

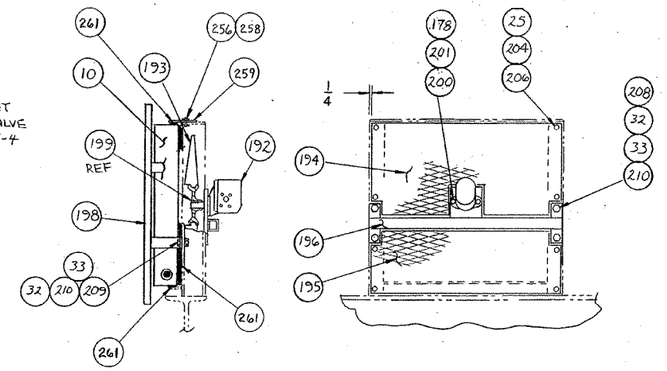

DETAIL U

OIL COOLER ASSY

SHEET 3, G-5

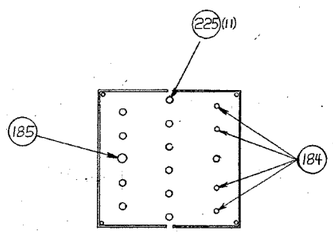

DETAIL V

SHEET 1 H-4

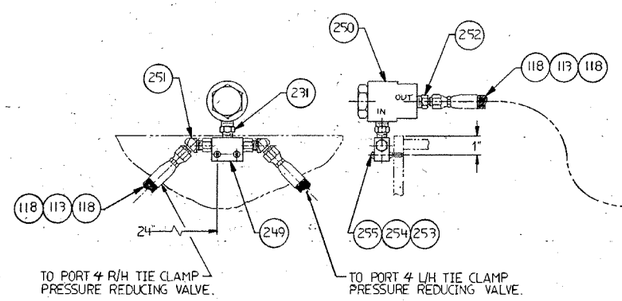

VIEW X

SHUTTLE VALVE W/ INLINE HYD. FILTER.

SHEET 1, G-3

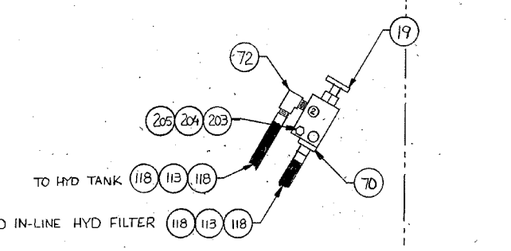

VIEW T

ADJUSTABLE TIE CLAMP CONTROL

SHEET 1, H-3

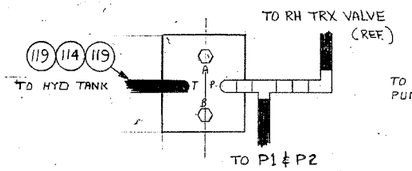

DETAIL W

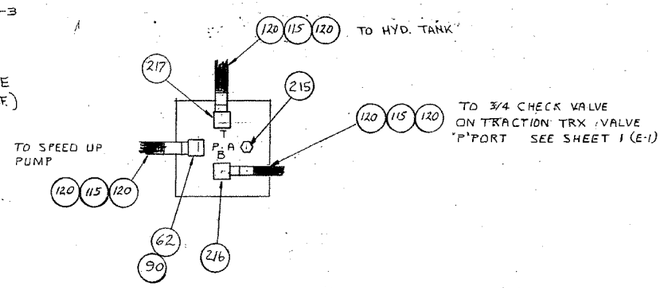

DETAIL P

A8998VAC & AD & AE & AF & AG

NON-LOAD SENSING

SEE PARTS LIST

FIG NO.	ITEM NO.	PART NUMBER	DESCRIPTION AND MATERIAL SIZE (REF ONLY)	QTY

IMPLIED TOLERANCES — ALL DIMENSIONS ARE IN INCHES - TO, FRACTIONS UNLESS OTHERWISE SPECIFIED

NOMINAL SIZE RANGE OVER	TO	FRACTION	2 PLACE DECIMAL	3 PLACE DECIMAL	NOMINAL SIZE RANGE OVER	TO	FRACTION	2 PLACE DECIMAL	3 PLACE DECIMAL
		PLUS OR MINUS					PLUS OR MINUS		
—	1	1/64	.01	.003	6	24	3/64	.03	.008
1	6	1/32	.02	.005	24	—	1/16	.05	.010

ANGULAR DIMENSIONS PLUS OR MINUS 1 DEGREE

ALL MACHINED SURFACES TO HAVE A 125 SURFACE FINISH OR 125 MICROINCHES UNLESS OTHERWISE SPECIFIED.

NON-LOAD SENSING ONLY

WEIGHT lbs.

3rd ANGLE PROJECTION

DO NOT SCALE

LAST ITEM NO USED

DESCRIPTION (3R) HYDRAULIC ASSY

DRAWN HH DATE 12-21-92

CHECKED SPW DATE 1-13-93

APP ENG DATE

APP MFG DATE

MACHINE TYPE 30 MPH 24 VDC TRIO III TRX VALVES

Tamper

TAMPER CORP.

SHEET 4 OF 5

DWG. SIZE NO. A8998V

THIS DOCUMENT CONTAINS PROPRIETARY INFORMATION AND SUCH INFORMATION MAY NOT BE DISCLOSED TO OTHERS FOR ANY PURPOSE OR USED FOR MANUFACTURING PURPOSES WITHOUT THE WRITTEN PERMISSION OF TAMPER.

ENGLDWG NO.
A8998V

REVISIONS							
NO	ER	DESCRIPTION	ZONE	DR	CK	APP	MF
20	7779.2	RELEASED SHEET 5		HH	JA		
24	12285.9	PICTORAL UPDATE OF HOSE & DESCRIPTION TO SPEED UP, MOTOR & RELIEF. MOVED IT-283 TO PUMPS P1 & P2. REMOVED DUPLICATE FITTINGS FROM P4. ADDED HOSE & CLAMPS TO P3 11-16-00	C3, E6 A5, E5 D8, C8	HH	HW	NW	
AB		NO CHANGE					

SECTION J-1

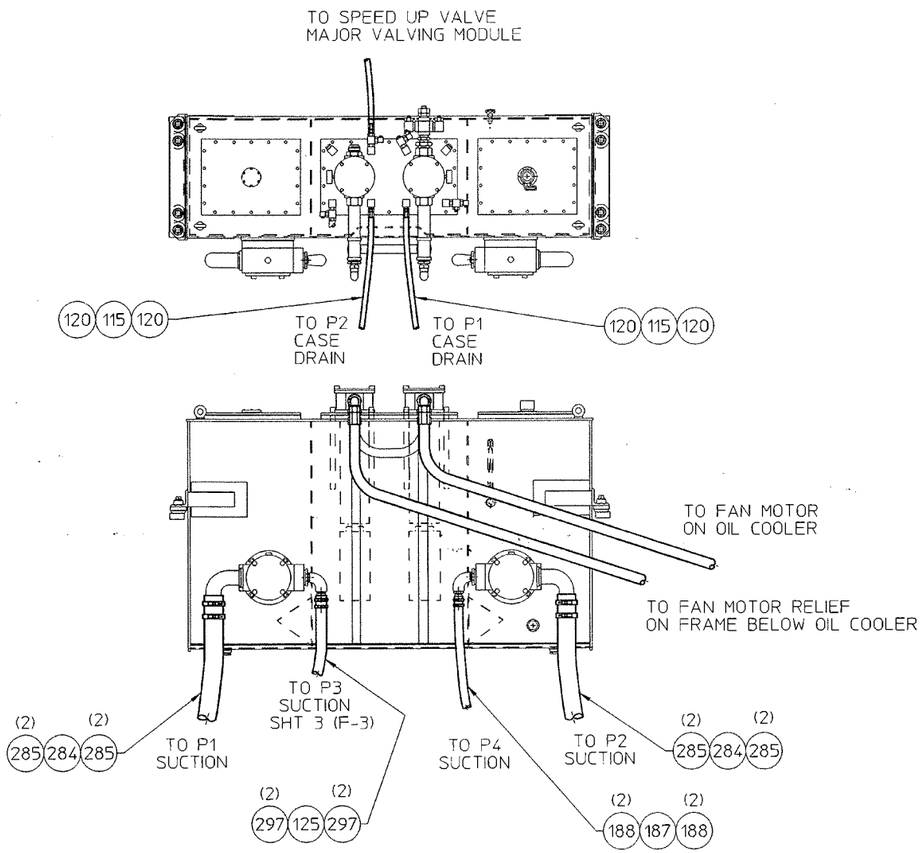

FOR MACHINES WITH 200 GALLON CAPACITY HYDRAULIC TANK

BEGINNING WITH CNR S/N-5591814 (PLUS NS S/N-5591764 & S/N-5591774)

A8998VAC, AD & AE & AF & AG
NON-LOAD SENSING

FIG. NO.	ITEM NO.	PART NUMBER	DESCRIPTION AND MATERIAL SIZE (REF.ONLY)	QTY
		SEE	SEPARATE PARTS LIST	

IMPLIED TOLERANCES
ALL DIMENSIONS ARE IN INCHES-TOLERANCE UNLESS OTHERWISE SPECIFIED

NOMINAL SIZE RANGE		PLUS OR MINUS			NOMINAL SIZE RANGE		PLUS OR MINUS		
OVER	TO	FRACTION	2 PLACE DECIMAL	3 PLACE DECIMAL	OVER	TO	FRACTION	2 PLACE DECIMAL	3 PLACE DECIMAL
-	1	1/64	.01	.003	6	24	1/64	.03	.008
1	6	1/32	.02	.005	24	-	1/16	.05	0.10

ANGULAR DIMENSIONS PLUS OR MINUS 1 DEGREE

ALL MACHINED SURFACES TO HAVE A SURFACE FINISH OF 125 MICROINCHES UNLESS OTHERWISE SPECIFIED

WELDING SPECIFICATION

UNLESS OTHERWISE SPECIFIED ALL WELDS SHOULD ADHERE TO FAIRMONT TAMPER WELDING SPECIFICATION NO. 101

WEIGHT lbs

DO NOT SCALE

SHEET 5 CONT. —

DESCRIPTION HYDRAULIC ASSY

DRAWN HH	DATE 10-31-95	MACHINE TYPE TR10 III TRX VALVES
CHECKED JA	DATE 11-1-95	
APPROVED HAWK	DATE 11-1-95	Fairmont Tamper 2401 Columbia Road-Box 20 Route West Columbia South Carolina 29171-0020 (803) 822-9100
APPROVED	DATE	

LAST EDIT 10178 | PRELIMINARY | DATE | ENGLDWG NO. A8998V

THIS DOCUMENT CONTAINS PROPRIETARY INFORMATION AND SUCH INFORMATION MAY NOT BE DISCLOSED TO OTHERS FOR ANY PURPOSE OR USED FOR MANUFACTURING PURPOSES WITHOUT THE WRITTEN PERMISSION OF FAIRMONT TAMPER.

CONFIDENTIAL
(c) COPYRIGHT 2001 HARSCO TRACK TECHNOLOGIES. THIS DRAWING OR DOCUMENT IS THE PROPERTY OF HARSCO TRACK TECHNOLOGIES AND EMBODIES CONFIDENTIAL INFORMATION, TRADE SECRET INFORMATION, AND/OR KNOW-HOW THAT IS THE PROPERTY OF HARSCO TRACK TECHNOLOGIES. BY ACCEPTING THIS DRAWING OR DOCUMENT, THE RECIPIENT AGREES (1) NOT TO PROVIDE, OR OTHERWISE MAKE AVAILABLE, THE DRAWING OR DOCUMENT, OR ANY INFORMATION OR KNOW-HOW EMBODIED THEREIN, TO ANY THIRD PARTY AND (2) NOT TO REPRODUCE, OR USE, THE DRAWING OR DOCUMENT, TO MANUFACTURE ANY APPARATUS OR DEVICE, WITHOUT THE PRIOR WRITTEN AUTHORIZATION OF HARSCO TRACK TECHNOLOGIES.

SOLID EDGE DRAWING

SECTION J-3A
PI/P2

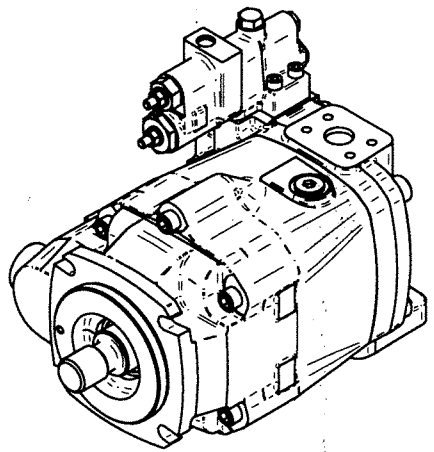

VENDER VICKERS EATON
PUMP
PVM098ML11GS02AAA28000000A0A
PART NUMBER 123AL00215A

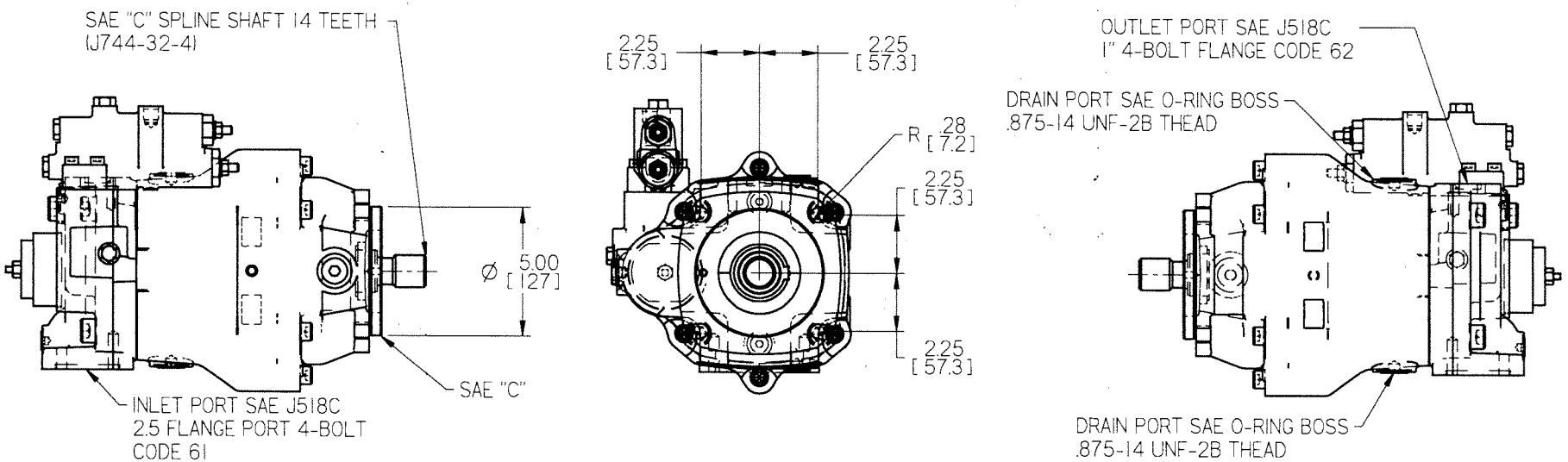

IMPLIED TOLERANCES
ALL DIMENSIONS ARE IN INCHES - TOLERANCE UNLESS OTHERWISE SPECIFIED

NOMINAL SIZE RANGE		INCH PLUS OR MINUS		NOMINAL SIZE RANGE		METRIC PLUS OR MINUS	
OVER	TO	2 PLACE DECIMAL	3 PLACE DECIMAL	OVER	TO	1 PLACE DECIMAL	2 PLACE DECIMAL
0	6	.03	.005	0	150	.8	.13
6	24	.04	.008	150	600	1.0	.20
24	-	.06	.010	-	600	1.5	.25

UNLESS OTHERWISE SPECIFIED ALL MACHINED SURFACES WILL HAVE:
A SURFACE FINISH OF 125 MICROINCHES.
ANGULAR TOLERANCE OF ± 60'
CONCENTRICITY WITHIN .010

THIRD ANGLE PROJECTION

UNLESS OTHERWISE SPECIFIED FOR REFERENCE ONLY, THIS DRAWING SHOULD BE REFERENCED TO THE LATEST REVISION NO. SHOWN IN THE LOCATION BOX.

CHANGE	R/L	REVISION	DATE
100464	A	RELEASE	04-25-06

Description: PVM098 PUMP
Drawing Number: ----------
Machine Type: TRIO
Model: 4011624.par
Drawn: mtrippe
Date Drawn: 04-26-06
Weight: Error: No reference
Scale: -
Drawn Date: HH
Checking: APD
Matl:

HTT
Harsco Track Technologies
Harsco
Columbia, SC

Part Number: 4011624
Size: B
Sheet: 1 of 1

Plotted by hhill on 8/30/2006 4011624.dft

HYDRAULIC REMOTE CONTROL VALVE
JOYSTICK
DWG NO A6645Y01
SECTION J–4

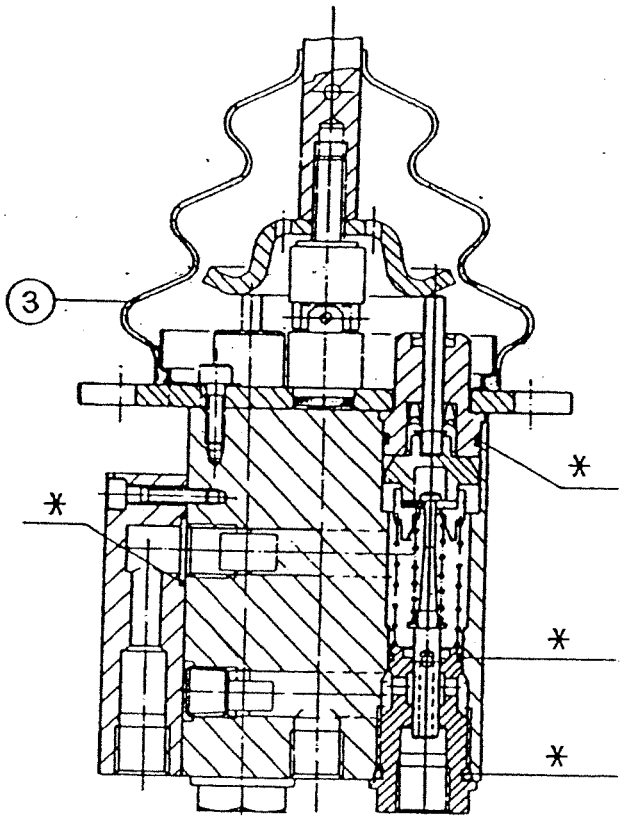

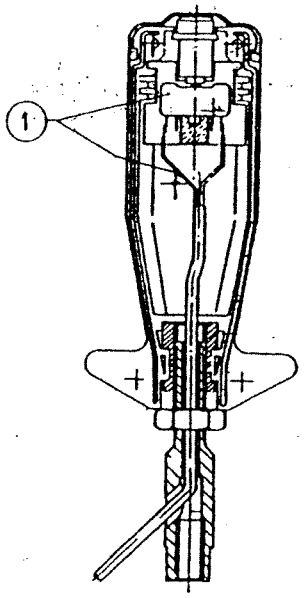

HANDLE WITH PUSH BUTTON

ITEM NO	PART NO	DESCRIPTION
4	C5982Y04	SEAL KIT (INCLUDES ITEMS MARKED WITH ASTERISK)
3	C5982Y03	RUBBER BOOT
2	C5982Y02	SPRING KIT ASSY
1	C5982Y01	ELECTRICAL SWITCH KIT

HYDRAULIC REMOTE CONTROL VALVE
FOOT PEDAL
DWG NO A0698Y06
SECTION J–4A

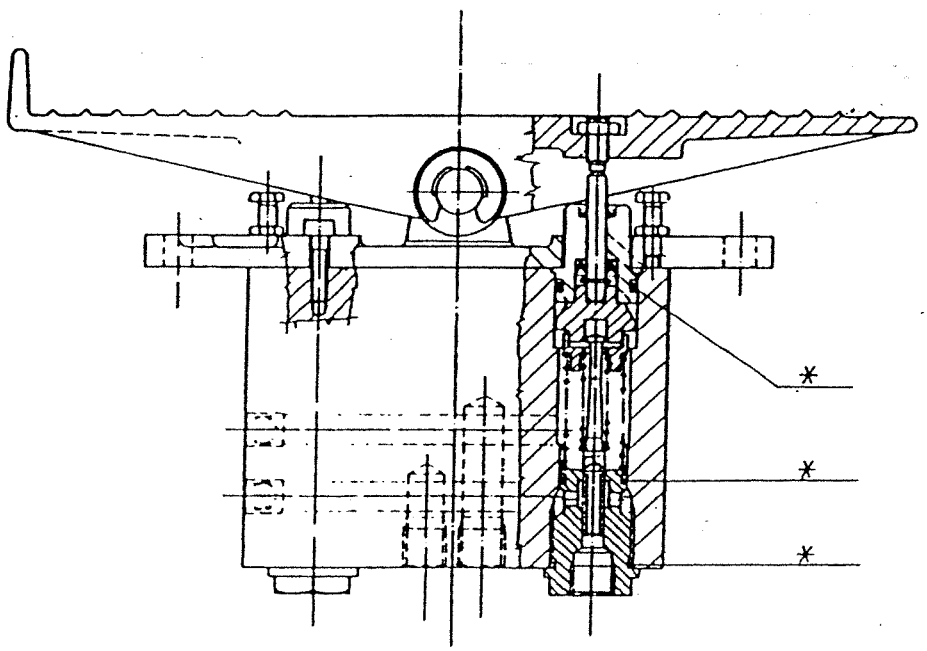

ITEM NO	PART NO	DESCRIPTION
5	C5982Y05	SEAL KIT (INCLUDES ITEMS MARKED WITH ASTERISK)
2	C5982Y02	SPRING KIT ASSY

CONFIDENTIAL
© COPYRIGHT 2001 HARSCO TRACK TECHNOLOGIES. THIS DRAWING OR DOCUMENT IS THE PROPERTY OF HARSCO TRACK TECHNOLOGIES AND EMBODIES CONFIDENTIAL INFORMATION, TRADE SECRET INFORMATION, AND/OR KNOW-HOW THAT IS THE PROPERTY OF HARSCO TRACK TECHNOLOGIES. BY ACCEPTING THIS DRAWING OR DOCUMENT, THE RECIPIENT AGREES (1) NOT TO PROVIDE, OR OTHERWISE MAKE AVAILABLE, THE DRAWING OR DOCUMENT, OR ANY INFORMATION OR KNOW-HOW EMBODIED THEREIN, TO ANY THIRD PARTY AND (2) NOT TO REPRODUCE OR USE THE DRAWING OR DOCUMENT TO MANUFACTURE ANY APPARATUS OR DEVICE, WITHOUT THE PRIOR WRITTEN AUTHORIZATION OF HARSCO TRACK TECHNOLOGIES.

SOLID EDGE DRAWING

SECTION J-5A

(Hyd Air Conditioner)

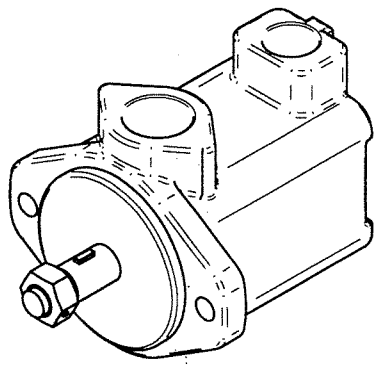

VENDOR VICKER EATON
PART NUMBER V10-IP6P-38C20

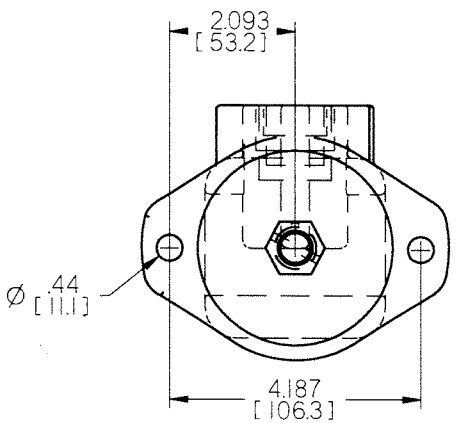

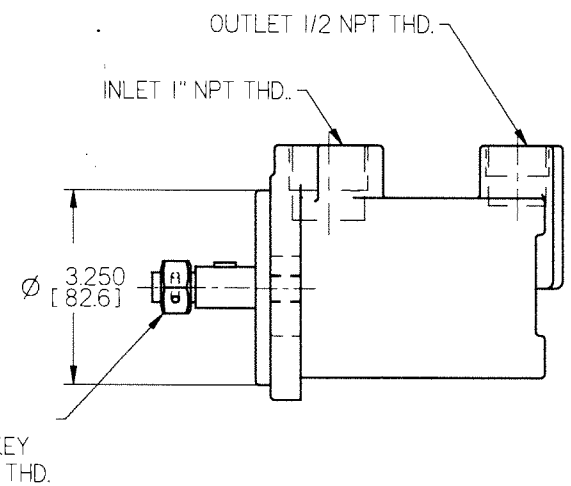

IMPLIED TOLERANCES
ALL DIMENSIONS ARE IN INCHES - TOLERANCE UNLESS OTHERWISE SPECIFIED

NOMINAL SIZE RANGE		INCH PLUS OR MINUS		NOMINAL SIZE RANGE		METRIC PLUS OR MINUS	
OVER	TO	2 PLACE DECIMAL	3 PLACE DECIMAL	OVER	TO	1 PLACE DECIMAL	2 PLACE DECIMAL
0	6	.03	.005	0	150	.8	.13
6	24	.04	.008	150	600	1.0	.20
24	-	.06	.010	-	600	1.5	.25

UNLESS OTHERWISE SPECIFIED ALL MACHINED SURFACES WILL HAVE:
A SURFACE FINISH OF 125 MICROINCHES
ANGULAR TOLERANCE OF ± 30'
CONCENTRICITY WITHIN .010

THIRD ANGLE PROJECTION

UNLESS OTHERWISE SPECIFIED ALL WELDS SHALL ADHERE TO THE LATEST HTT WELDING SPECIFICATION

CHANGE	R/L	REVISION	DATE
100464	A	RELEASE	04-25-06

Description: V10 PUMP
Drawing Number: ----------
Machine Type: TRIO
Model: 4011623.par
Drawn: mtrippe
Date Drawn: 04-27-06
Weight: Error: No reference
Scale:
CPVS Setup: HH
CPVS Start: APD
Matl:

HTT
Harsco Track Technologies
Harsco
Columbia, SC

Part Number: 4011623
Size: B
Sheet: 1 of 1

Plotted by hhill on 8/30/2006 4011623.dft

CONFIDENTIAL
© COPYRIGHT 2001 HARSCO TRACK TECHNOLOGIES. THIS DRAWING OR DOCUMENT IS THE PROPERTY OF HARSCO TRACK TECHNOLOGIES AND EMBODIES CONFIDENTIAL INFORMATION, TRADE SECRET INFORMATION, AND/OR KNOW-HOW THAT IS THE PROPERTY OF HARSCO TRACK TECHNOLOGIES. BY ACCEPTING THIS DRAWING OR DOCUMENT, THE RECIPIENT AGREES (1) NOT TO PROVIDE, OR OTHERWISE MAKE AVAILABLE, THE DRAWING OR DOCUMENT, OR ANY INFORMATION OR KNOW-HOW EMBODIED THEREIN, TO ANY THIRD PARTY AND (2) NOT TO REPRODUCE OR USE THE DRAWING OR DOCUMENT TO MANUFACTURE ANY APPARATUS OR DEVICE, WITHOUT THE PRIOR WRITTEN AUTHORIZATION OF HARSCO TRACK TECHNOLOGIES.

SOLID EDGE DRAWING

SECTION J-6A
P3/P4

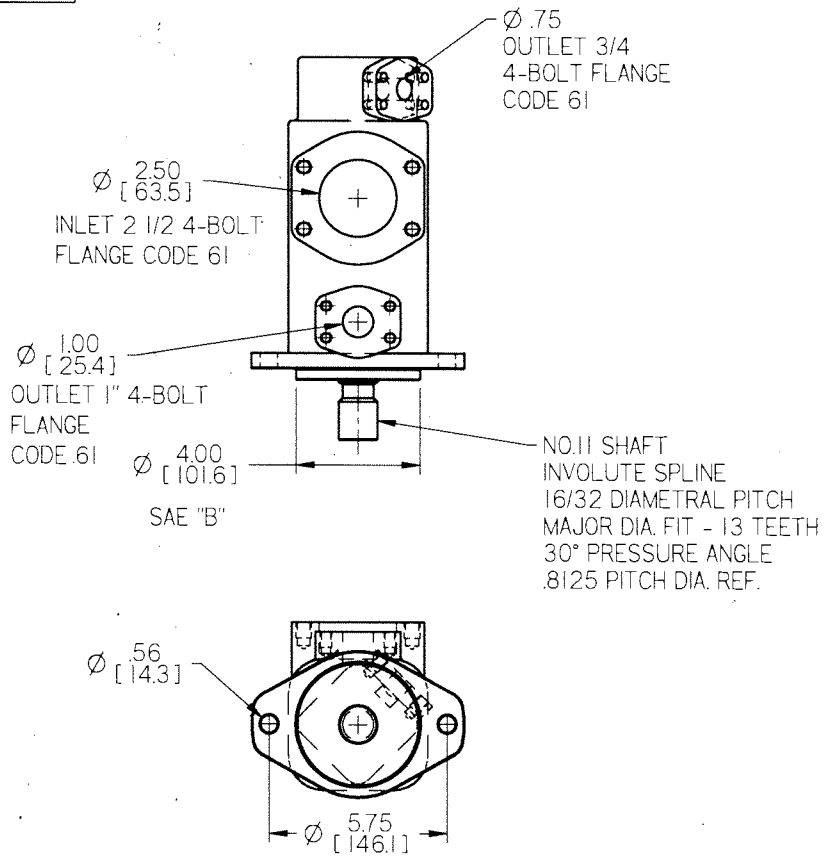

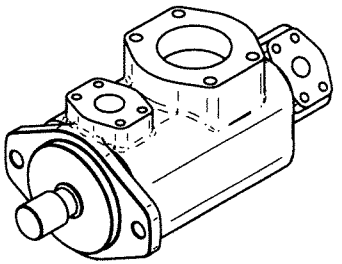

VENDOR VICKERS EATON
2520VQ17A511CB20LH
PART NUMBER 430231-S

IMPLIED TOLERANCES
ALL DIMENSIONS ARE IN INCHES - TOLERANCE UNLESS OTHERWISE SPECIFIED

NOMINAL SIZE RANGE OVER	TO	INCH PLUS OR MINUS 2 PLACE DECIMAL	3 PLACE DECIMAL	NOMINAL SIZE RANGE OVER	TO	METRIC PLUS OR MINUS 1 PLACE DECIMAL	2 PLACE DECIMAL
0	6	.03	.005	0	150	.8	.13
6	24	.04	.008	150	600	1.0	.20
24	-	.05	.010	-	600	1.5	.25

UNLESS OTHERWISE SPECIFIED ALL MACHINED SURFACES WILL HAVE:
A SURFACE FINISH OF 125 MICROINCHES
ANGULAR TOLERANCE OF ± 30'
CONCENTRICITY WITHIN .002

THIRD ANGLE PROJECTION

UNLESS OTHERWISE SPECIFIED ALL WELDS SHOULD ADHERE TO THE LATEST HTT QUALITY NO SPECIFICATION 151

CHANGE	R/L	REVISION	DATE
100464	A	RELEASE	04-26-06

Description: VANE DOUBLE PUMP
Drawing Number: ----------
Machine Type: TRIO
Model: 4011622.par
Drawn: mtrippe
Date Drawn: 04-26-06
Weight: Error: No reference
Scale:
APVD Dwg: HH
APVD Ch mg: APD
Matl:

HTT
Harsco Track Technologies
Harsco
Columbia, SC

Part Number: 4011622
Size: B
Sheet: 1 of 1

Plotted by hhill on 8/30/2006 4011622.dft

LOCKOUT CYLINDER ASSY
(4" BORE, 10 13/16" STROKE)

SECTION J-8 DWG.NO. X769757ZA

ITEM	DESCRIPTION	PART NUMBER	QTY ZA	QTY SL KIT
001	RETAINING RING	L40001	4	
002	1 1/2 SPHERICAL BEARING	L424439	2	
003	1 1/8-12 LOCK NUT	L426014	1	
004	PISTON WASHER	Z769731-001	2	
005	*O-RING	L411591		1
007	*O-RING	L410333		2
008	ROD & LUG ASSY	X769754ZA	1	
009	CYLINDER BODY 4"	W769404AZ	1	
010	ROD BUSHING	X769402-001	1	
011	PISTON	X769400-001	1	
012	*BACK-UP RING	L421564		3
013	1/4-20 X 1/2 CP SETSCR W/ NYLOCK		1	
016	*ROD WIPER	L425928		1
017	ROD BUSHING CAP	X769753-001	1	
018	*PISTON ROD SEAL	0-3395000-1-04		1
019	SEAL KIT (SEE NOTE BELOW)	X769757A	1	

NOTE:

ITEMS MARKED WITH ASTERISK (*) ARE INCLUDED IN THE SEAL KIT.

LOCKOUT CYLINDER ASSY
DWG NO X769757ZA
SECTION J-8

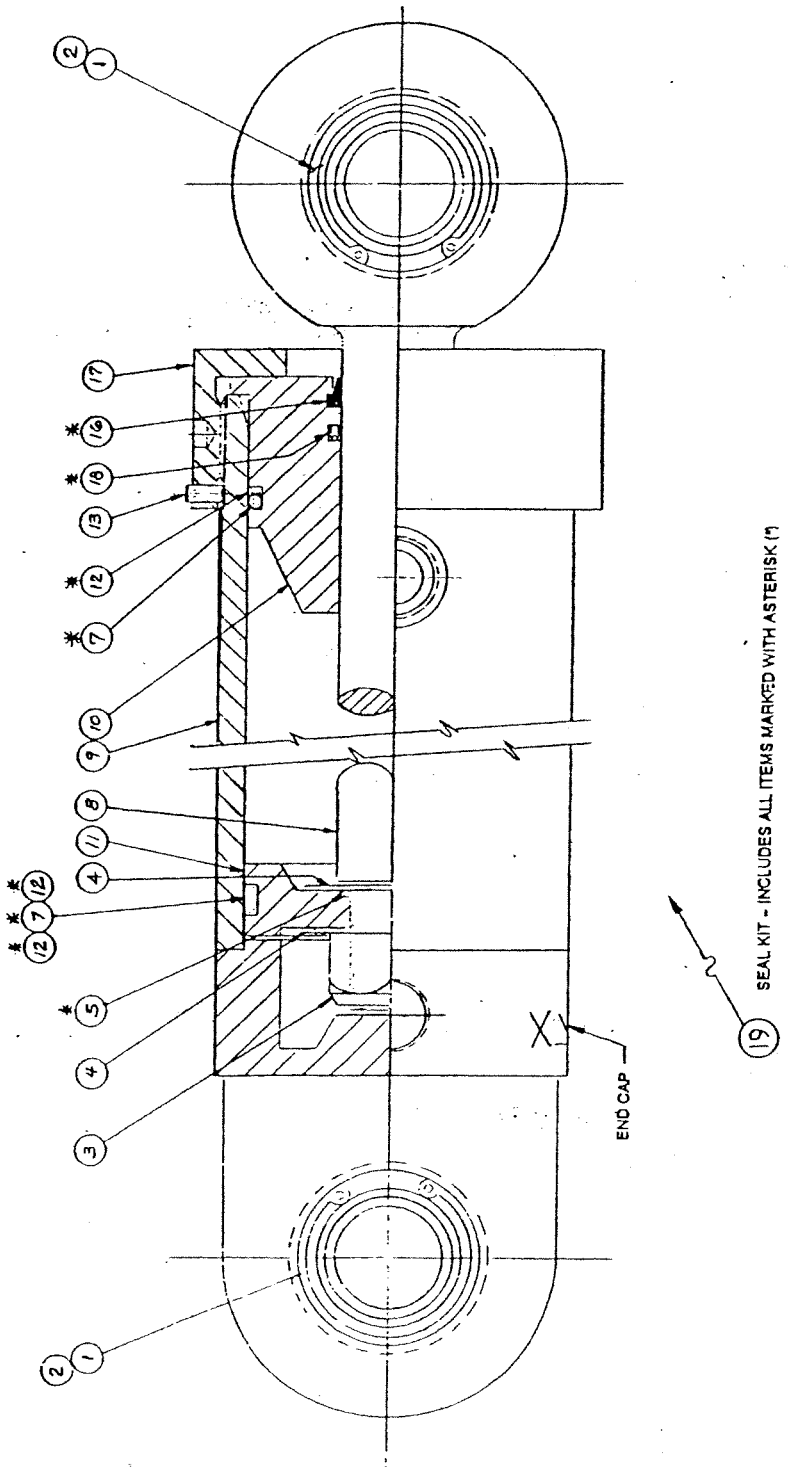

3" BORE HYDRAULIC CYLINDER ASSY
DWG NO A0173Y03
SECTION J-9

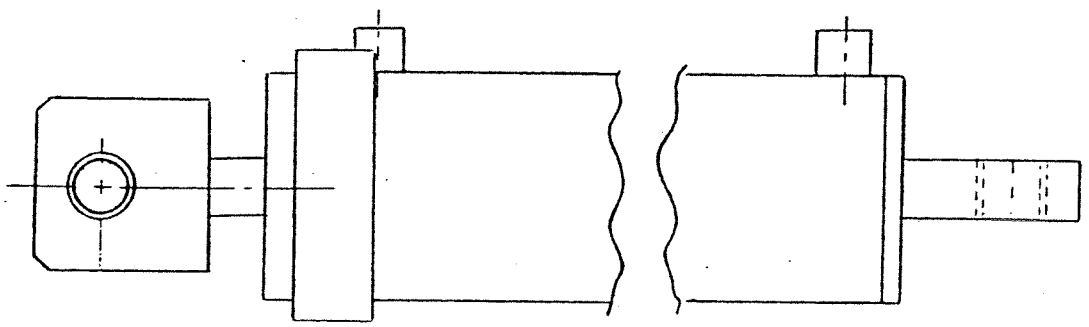

FOR SEAL KIT,
ORDER PART NO. A2610Y03

SECTION J-10

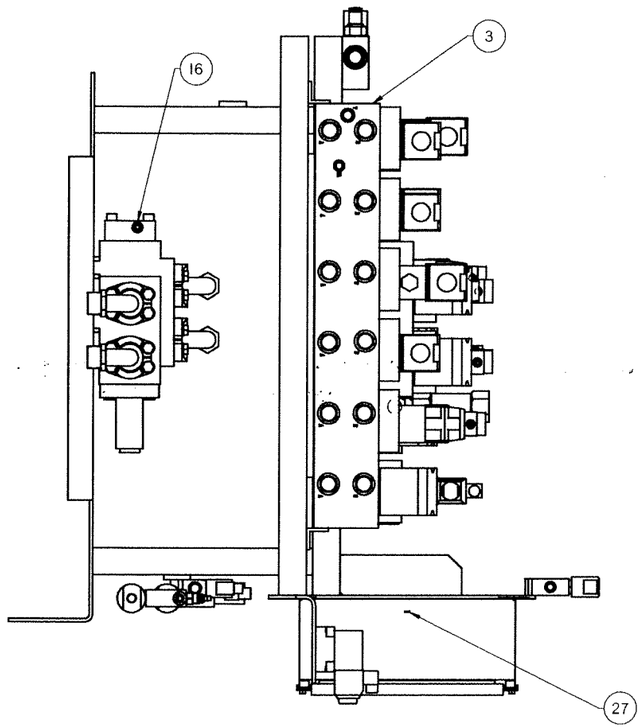

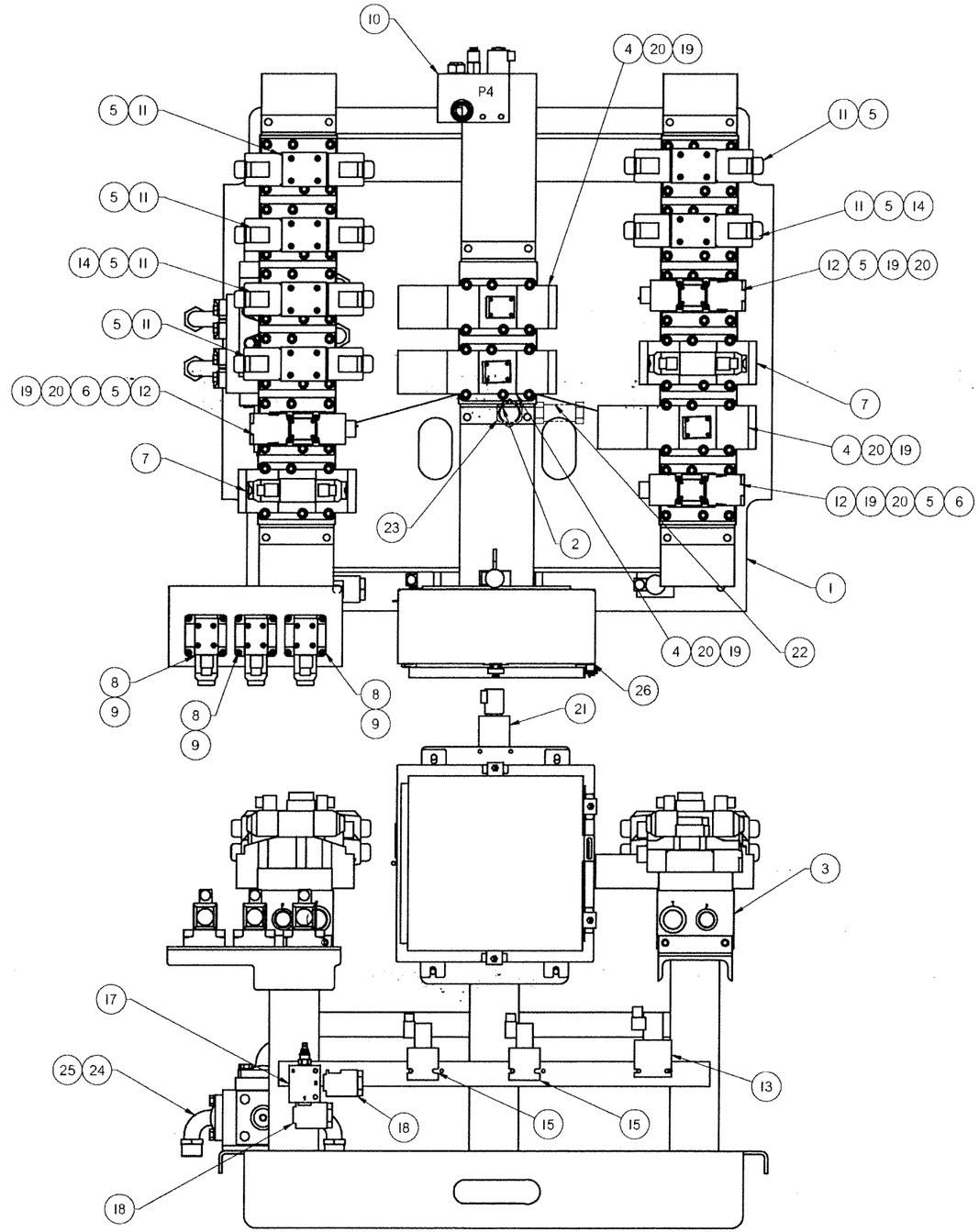

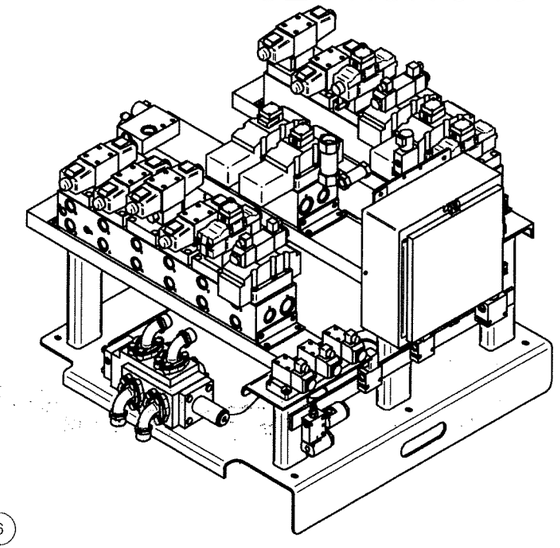

Item Number	Part Number	Description	Quantity
1	A8952WAB	'MAJOR VALVING BRKT	1
2	A0963Y01	D08 MANIFOLD 2 STATIONS	1
3	4011687	D08 MANIFOLD 6 STATIONS	2
4	4011659	D08 HYD. PILOT OP. PRO. V.	3
5	4011712	D05 TO D08 MANIFOLD	9
6	4011645	D05 REDUCING/RELIEVING V	2
7	4011802	D08 SOL. 4/3 DIR. VALVE	2
8	0-3361006-0-01	SUBPLATE (D03)	3
9	4011684	D03 VALVE 2/4	3
10	4011625	SOLENOID RELIEF VALVE	1
11	6641	D05 DBL. SOL. VALVE	6
12	4011661	D05 HYD.PILOT OP. VALVE	3
13	A0730Y04	VALVE, 3 WAY SOL. 24VDC	1
14	0-3336036-0-01	P PORT CHECK	2
15	A0730Y01	VALVE,3 WAY SOL	2
16	4011754	SELECTOR VALVE	1
17	A2130Y04	VALVE, PRESSURE RED	1
18	A5748Y01	IN-LINE FILTER	2
19	0-3360011-0-11	D03 TAP IN SANDWICH	6
20	0-3360011-0-01	D01 BLANK PLATE	6
21	4011653	SOLENOID VALVE	1
22	L40549	INLINE CHECK VALVE	1
23	L425044	CHECK VALVE	1
24	0-3304145-0-12	SPLIT FLG 90DEG-24-20JIC	6
25	0-3304142-0-05	SPLIT FLANGE MOUNTING KIT	6
26	C3030WAD	JUNCTION BOX ASSY.	1
27	4010830	MVM WIRING DIAGRAM, NS	1

CONFIDENTIAL

© COPYRIGHT 2001 HARSCO TRACK TECHNOLOGIES. THIS DRAWING OR DOCUMENT IS THE PROPERTY OF HARSCO TRACK TECHNOLOGIES AND EMBODIES CONFIDENTIAL INFORMATION, TRADE SECRET INFORMATION, AND/OR KNOW-HOW THAT IS THE PROPERTY OF HARSCO TRACK TECHNOLOGIES. BY ACCEPTING THIS DRAWING OR DOCUMENT, THE RECIPIENT AGREES (1) NOT TO PROVIDE, OR OTHERWISE MAKE AVAILABLE, THE DRAWING OR DOCUMENT, OR ANY INFORMATION OR KNOW-HOW EMBODIED THEREIN, TO ANY THIRD PARTY AND (2) NOT TO REPRODUCE OR USE THE DRAWING OR DOCUMENT TO MANUFACTURE ANY APPARATUS OR DEVICE, WITHOUT THE PRIOR WRITTEN AUTHORIZATION OF HARSCO TRACK TECHNOLOGIES.

SOLID EDGE DRAWING

IMPLIED TOLERANCES
ALL DIMENSIONS ARE IN INCHES TO TRANSFER DIMENSIONS OTHERWISE SPECIFIED

INCH				METRIC			
DECIMAL PLACES		ANGULAR DIMENSIONS		DECIMAL PLACES		ANGULAR DIMENSIONS	
DIGITS	TOL	DEGREES	TOL	DIGITS	TOL	DEGREES	TOL
2	0.1	0.5	±0.5	1	±1.0	1	±1.0
3	±0.25	0.1	±0.5	±0.5	±0.5	0.5	±0.5
4		0.05	±0.25				

UNLESS OTHERWISE SPECIFIED ALL MACHINED SURFACE FINISHES ARE 125 RMS

THIRD ANGLE PROJECTION

DO NOT SCALE DRAWING

CHANGE	R/L	REVISION	DATE
100511	A	RELEASE	05-16-06

Description: MAJOR VALVING ASSY

Drawing Number: ----------

Machine Type: TR10 NS

Model: 4011629.asm

Drawn: mtrippe — Date Drawn: 05-16-06

Weight: 0.000 lbm — Scale: 1:4 — Appr. Dwg: HH — Appr. Dwg: APD

Dwn:

HTT
Harsco Track Technologies
Harsco
Columbia, SC

Part Number: 4011629 — Size: D — Sheet: 1 of 1

Plotted by mtrippe on 5/22/2006 4011629.dft

ENG DWG NO
4010830

REVISIONS								
NO	ER	DESCRIPTION	ZONE	DR	CK	APP	MF
A	100151	NEW RELEASE		HH			
B	100691	DELETED TRACTION HI-LO SPEED VLV, WIRE #25 AND CL524. MOVED UP, TRACTION SPEED UP VLV. DELETED NOTE 3 ABOUT TRANSZORBS IN VALVE COILS. ADDED RAIL CLAMP FRAME FLOAT VALVE, WIRE #36, CL530 AND NOTE 4. ADDED EMERG. STOPS, WIRE #12, CL552 AND CL553. ADDED BACK-UP ALARMS, WIRE # 26B, CL554 AND WIRE #27C, CL555. ADDED EXCH LIFT HI-PRESS VALVE, WIRE #79, CL556		HH	DES	APD	

SECTION J-11

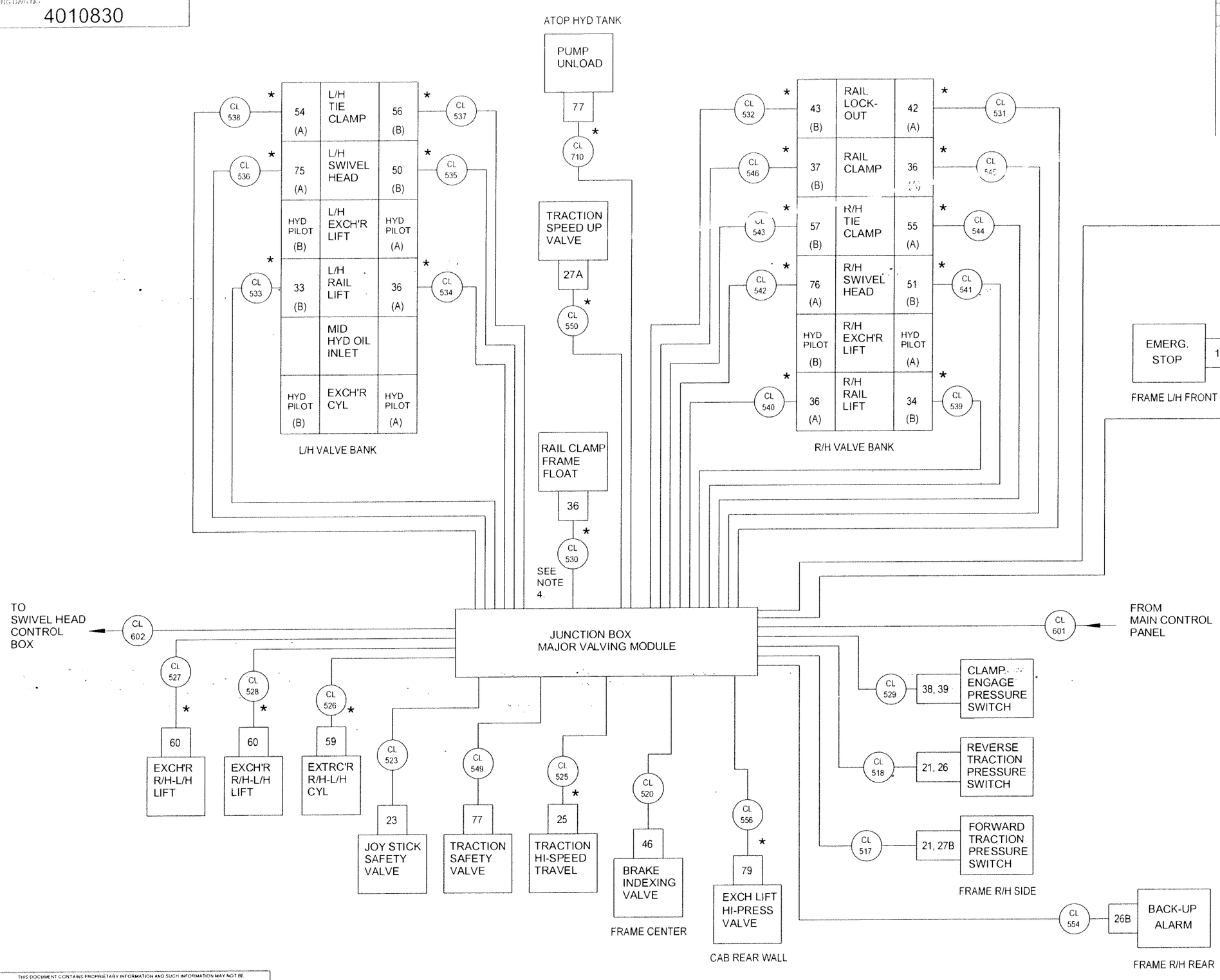

NOTE:

1. ALL CABLES ARE TO BE 16/2 SUPER-TREX REF P/N: 176444. DIN CONNECTORS REF P/N: 176125. WITH GROUND WIRE NO. 000, UNLESS OTHER WISE NOTED.
2. * = DIN PLUG CONNECTORS.
4. CHANGE CABLE CL524 TO CL530 AND CHANGE WIRE NUMBER TO #36 ON TERMINAL STRIP.

FOR REFERENCE ONLY

DESCRIPTION (30): MVM WIRING DIAGRAM, NS

DRAWN HH	DATE 12-16-05	MACHINE TYPE TR10 (NS)
CHECKED DES	DATE 12-16-05	Fairmon / Tamper
APP ENG APD	DATE 12-16-05	2401 Edmund Road (U.S. 21) Cayce West Columbia South Carolina 29171-0002 (803) 822-9160
SHEET 1	COPY - OF	
LAST ECR 10015 1	CHECKED dvan	ENG DWG NO 4010830
	DATE 11-Jan-06	

THIS DOCUMENT CONTAINS PROPRIETARY INFORMATION AND SUCH INFORMATION MAY NOT BE DISCLOSED TO OTHERS FOR ANY PURPOSE OR USED FOR MANUFACTURING PURPOSES WITHOUT THE WRITTEN PERMISSION OF FAIRMONT TAMPER.

TRX WORKHEAD VALVE ASSEMBLY SERVICE PARTS

SECTION J-12 DWG.NO. C9629W

ITEM	DESCRIPTION	PART NUMBER	QTY						
			L/H SH1	R/H SH2	TR SH3	P24 SH4	P27 SH5	P28 SH5	P25 SH6
001	SERVO STEM (TRX 100)	B7083P01	0	0	0	2	0	0	2
002	SERVO STEM (TRX 160)	B7083P02	0	0	0	0	2	2	0
004	24V HH COIL (RD)	B7083P04	0	0	0	2	0	0	0
005	SPRING	B7083P05	0	0	0	2	0	0	2
007	RELIEF POPPET	B7083P07	0	0	0	2	2	2	2
011	O-RING, L/D CK RET	B7083P11	0	0	0	2	0	0	2
012	O-RING	B7083P12	1	1	0	1	0	0	1
013	O-RING	B7083P13	10	4	2	4	2	2	4
016	O-RING	B7083P16	0	0	0	2	2	2	0
023	CORE TUBE	B7083P23	0	0	0	2	0	0	0
024	ELECT SECTION (TRX 100)	C9480P24	3	5	0	**	0	0	0
025	LIFT SECTION (TRX 100)	C9480P25	1	1	0	0	0	0	**
027	TRACT SECTION (TRX 160)	C9480P27	0	0	2	0	**	0	0
028	EXCH SECTION (TRX 160)	C9480P28	1	0	0	0	0	**	0
029	INLET COVER (TRX 160)	C9480P29	0	0	1	0	0	0	0
030	INLET COVER (TRX 100)	C9480P30	1	1	0	0	0	0	0
031	OUTLET COVER (TRX 160)	C9480P31	0	0	1	0	0	0	0
032	END COVER (TRX 160)	C9480P32	1	0	0	0	0	0	0
033	OUTLET COVER (TRX 100)	C9480P33	0	1	0	0	0	0	0
034	TRX 160/100 MID-INLET	C9480P34	1	0	0	0	0	0	0
036	O-RING	B7083P36	0	0	0	2	0	0	0
037	O-RING	B7083P37	0	0	0	0	2	2	0
038	RETAINING NUT	B7083P38	0	0	0	2	0	0	0
039	PUSH PIN (LONG)	B7083P39	0	0	0	2	0	0	0
041	SHIM KIT RELIEF	L94071	0	0	0	2	2	2	2
042	GASKET (TRX 100)	L94072	0	0	0	2	0	0	2
043	GASKET (TRX 160)	L94073	0	0	0	0	2	2	0
044	L/D CK POPPET (160)	B7083P44	0	0	0	0	2	2	0
045	L/D CK POPPET (100)	B7083P45	0	0	0	2	0	0	2
048	BALL BEARING	B7083P48	0	0	0	2	0	0	0
049	O-RING	B7083P49	0	0	0	2	0	0	2
051	O-RING	B7083P51	0	0	0	0	0	0	2
052	O-RING	B7083P52	1	1	0	1	0	0	1
053	BACK-UP	B7083P53	0	0	0	2	0	0	2
054	BACK-UP	B7083P54	0	0	0	2	0	0	2
055	BACK-UP	B7083P55	0	0	0	0	2	2	0
056	O-RING	B7083P56	1	0	1	0	1	1	0
057	O-RING	B7083P57	1	0	1	0	1	1	0
058	SPRING	B7083P58	0	0	0	0	2	2	0
059	PLUG	B7083P59	2	0	0	2	0	0	0
060	SPRING	B7083P60	0	0	0	0	0	0	2

TRX WORKHEAD VALVE ASSEMBLY SERVICE PARTS

SECTION J-12 DWG.NO. C9629W

ITEM	DESCRIPTION	PART NUMBER	QTY						
			L/H SH1	R/H SH2	TR SH3	P24 SH4	P27 SH5	P28 SH5	P25 SH6
061	PLUG	B7083P61	0	0	0	0	0	0	2
063	M/I SPG RETAIN	B7083P63	0	0	0	0	2	2	0
064	M/I SPRING (10 BAR)	B7083P64	0	0	0	0	2	0	0
065	M/I SPRING (10 BAR)	B7083P65	0	0	0	0	0	0	1
067	SPRING RETAINER	B7083P67	0	0	0	2	0	0	2
068	M/O POPPET	B7083P68	0	0	0	2	0	0	0
069	M/O POPPET (4 BAR)	B7083P69	0	0	0	0	0	2	0
070	SPRING M/1 (10 BAR)	B7083P70	0	0	0	2	0	0	0
071	RELIEF SEAT (SOL SECTION)	B7083P71	0	0	0	2	0	0	0
072	SPOOL	B7083P72	0	0	0	2	0	0	0
073	BODY (TRX 160)	C9480P73	0	0	0	0	1	1	0
074	END CAP	B7083P74	0	0	0	0	2	2	0
075	BODY	C9480P75	0	0	0	1	0	0	1
076	END CAP	B7083P76	0	0	0	0	0	0	2
077	RELIEF PLUG	B7083P77	0	0	0	2	2	2	0
078	RELIEF SPRING	B7083P78	0	0	0	2	2	2	0
079	RELIEF SEAT	B7083P79	0	0	0	0	2	2	0
080	RELIEF PLUG	B7083P80	0	0	0	0	0	0	2
081	M/I SPOOL (TRX 160)	C9480P81	0	0	0	0	1	1	0
083	ELECTRICAL CONNECTOR	B7083P83	0	0	0	2	0	0	0
084	M/O POPPET	B7083P84	0	0	0	0	2	0	0
085	L/D CHECK RETAINER	B7083P85	0	0	0	2	0	0	0
086	RELIEF SEAT	B7083P86	0	0	0	0	0	0	2
087	M/I SPOOL (TRX 100)	C9480P87	0	0	0	1	0	0	1
089	M/O POPPET	B7083P89	0	0	0	0	0	0	2
090	SPRING M/I (6 BAR)	C9480P90	0	0	0	0	0	2	0

LEGEND FOR COLUMN LABELS:
- L/H - L/H VALVE BANK (SHEET 1)
- R/H - R/H VALVE BANK (SHEET 2)
- TR - TRAVEL VALVE BANK (SHEET 3)
- P24 - C9480P24 (SHEET 4)
- P27 - C9480P27 (SHEET 5)
- P28 - C9480P28 (SHEET 5)
- P25 - C9480P25 (SHEET 6)

NOTES:
- ** REF TO PART NUMBER @ COLUMN
- ** ITEMS 24, 25, 27 & 28 REF IS TO DESC @ COLUMN.
  QTY SHOWN IS FOR BANK, QTY FOR SERVICE PARTS IS ONE.

TRX WORKHEAD VALVE ASSY
LEFT HAND VALVE BANK
DWG NO C9629W
SECTION J–12
SHEET 1 OF 6

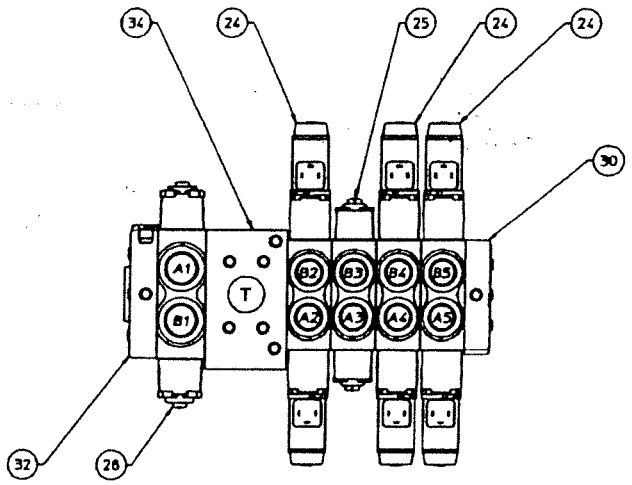

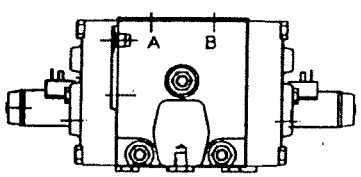

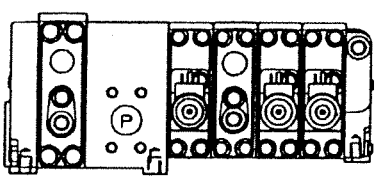

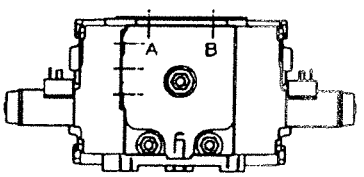

ITEM No.	POSITIONS	FUNCTION
32	END COVER	
28	(SECTION #1)	EXCHANGER IN & OUT
34	MID-INLET	
24	(SECTION #2)	LEFT RAIL LIFT
25	(SECTION #3)	LEFT TIE EXCHANGER LIFT
24	(SECTION #4)	LEFT SWIVEL HEAD
24	(SECTION #5)	LEFT TIE CLAMP
30	END COVER	

TRX WORKHEAD VALVE ASSY
RIGHT HAND VALVE BANK
DWG NO C9629W
SECTION J-12
SHEET 2 OF 6

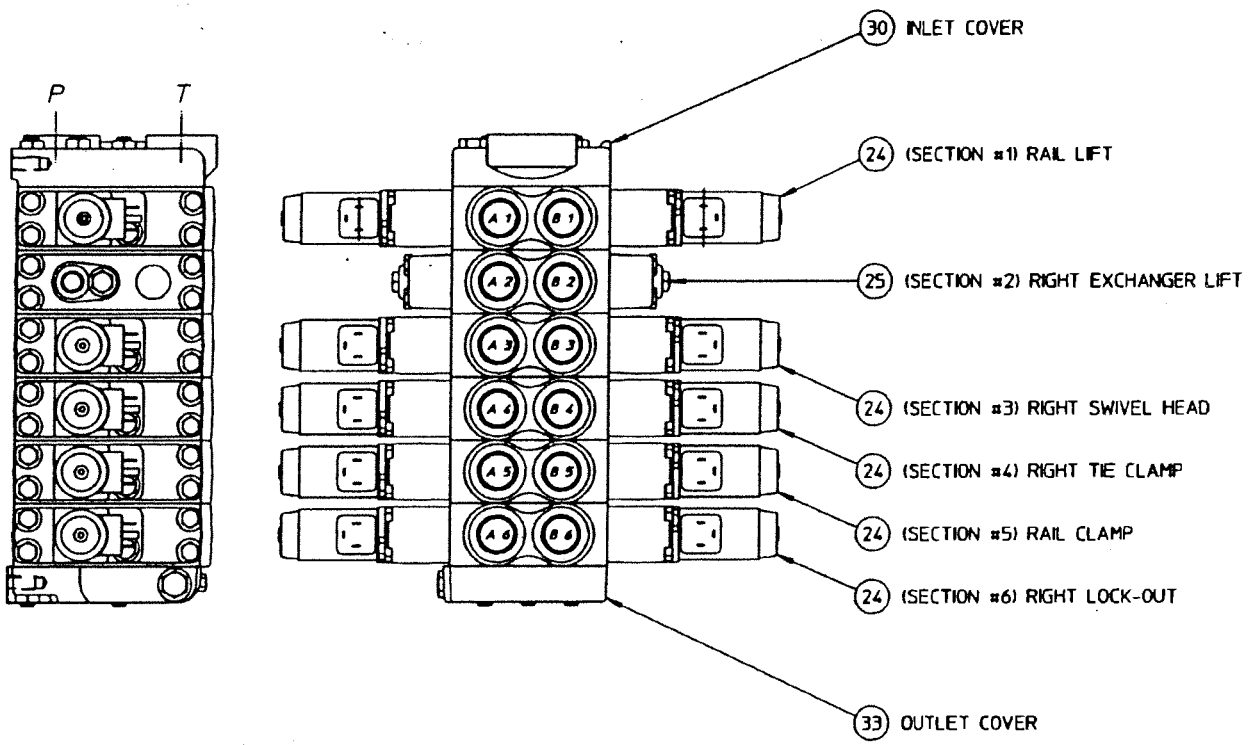

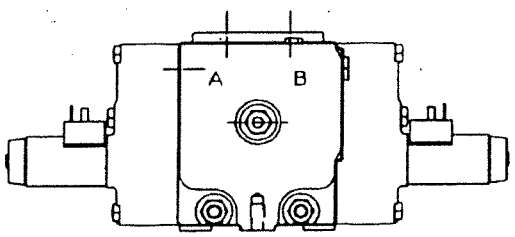

TRX WORKHEAD VALVE ASSY
TRACTION VALVE BANK
DWG NO C9629W
SECTION J-12
SHEET 3 OF 6

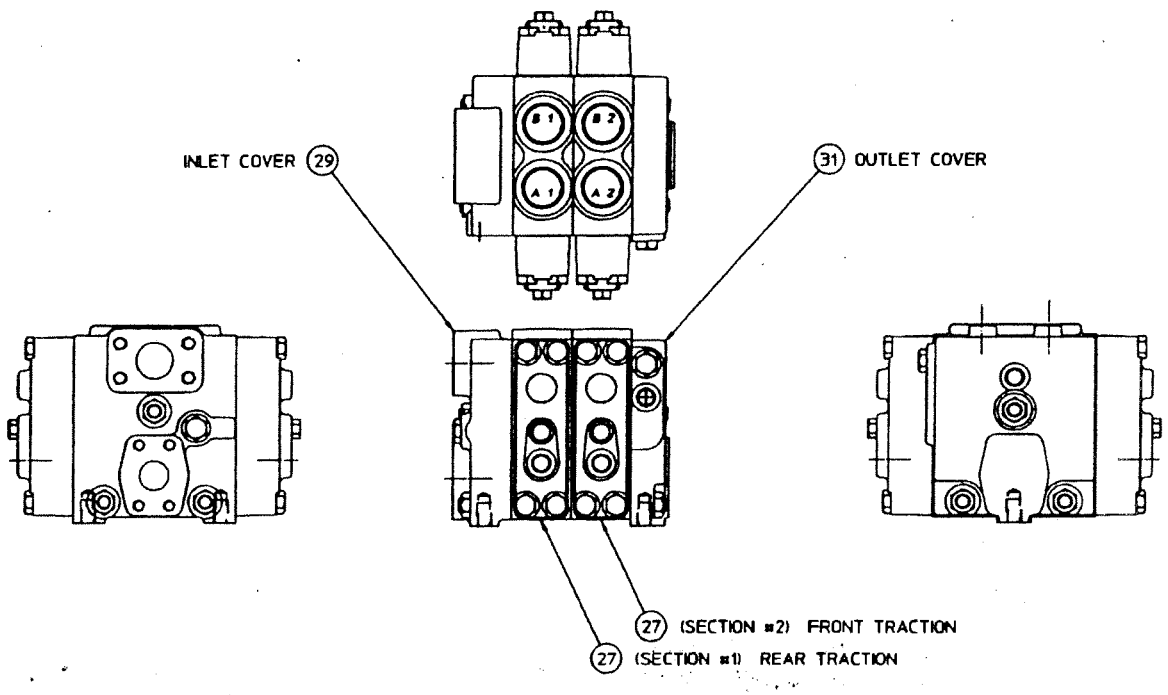

TRX WORKHEAD VALVE ASSY
C9480P24 VALVE SECTION
DWG NO C9629W
SECTION J-12
SHEET 4 OF 6

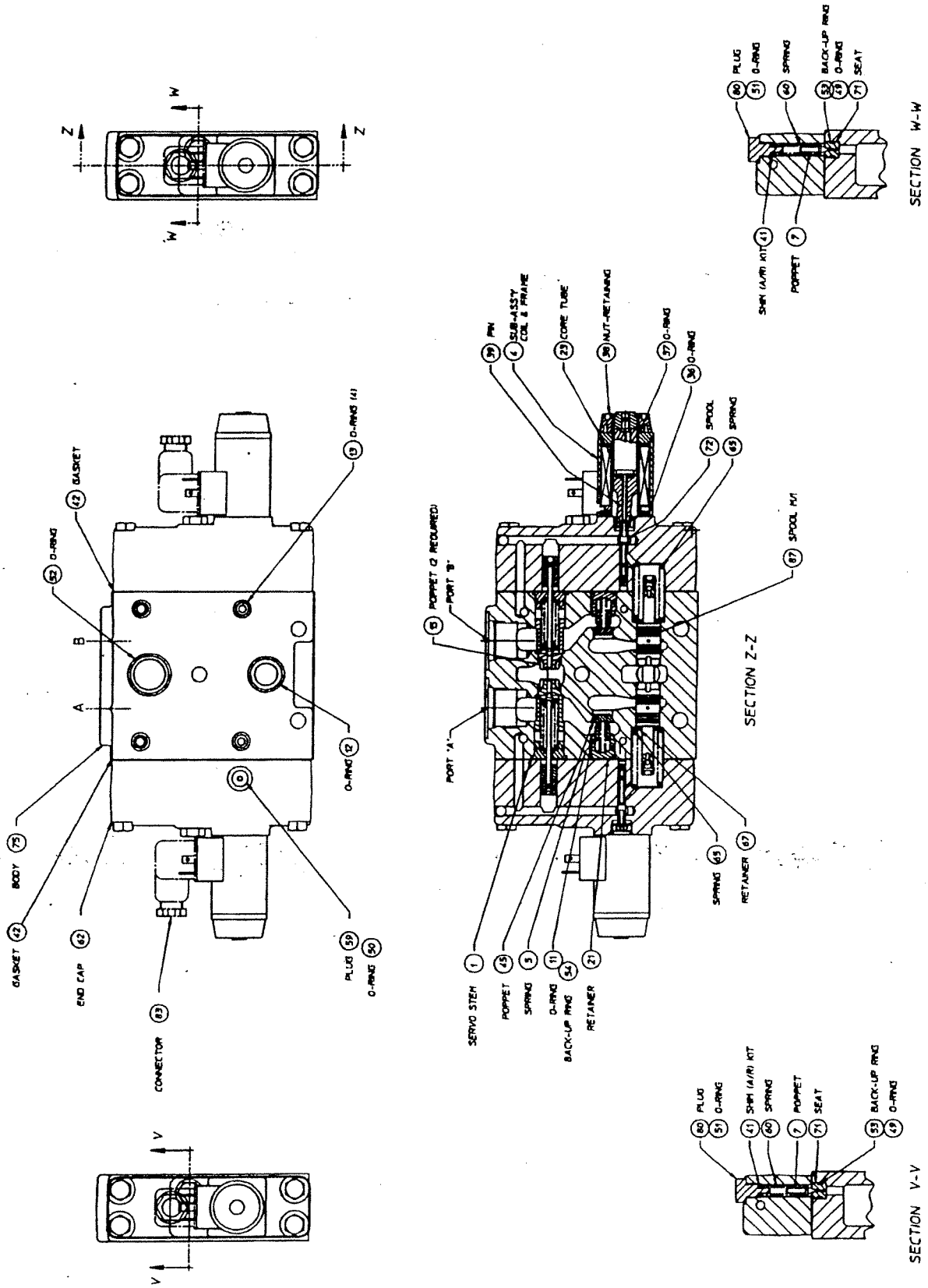

TRX WORKHEAD VALVE ASSY
C9480P27 TRACTION SECTION
C9480P28 EXCHANGER IN/OUT SECTION
DWG NO C9629W
SECTION J-12
SHEET 5 OF 6

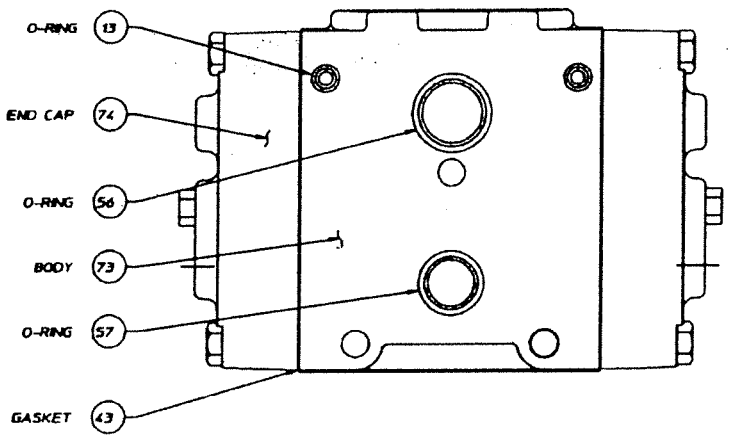

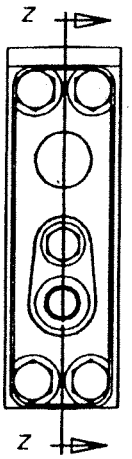

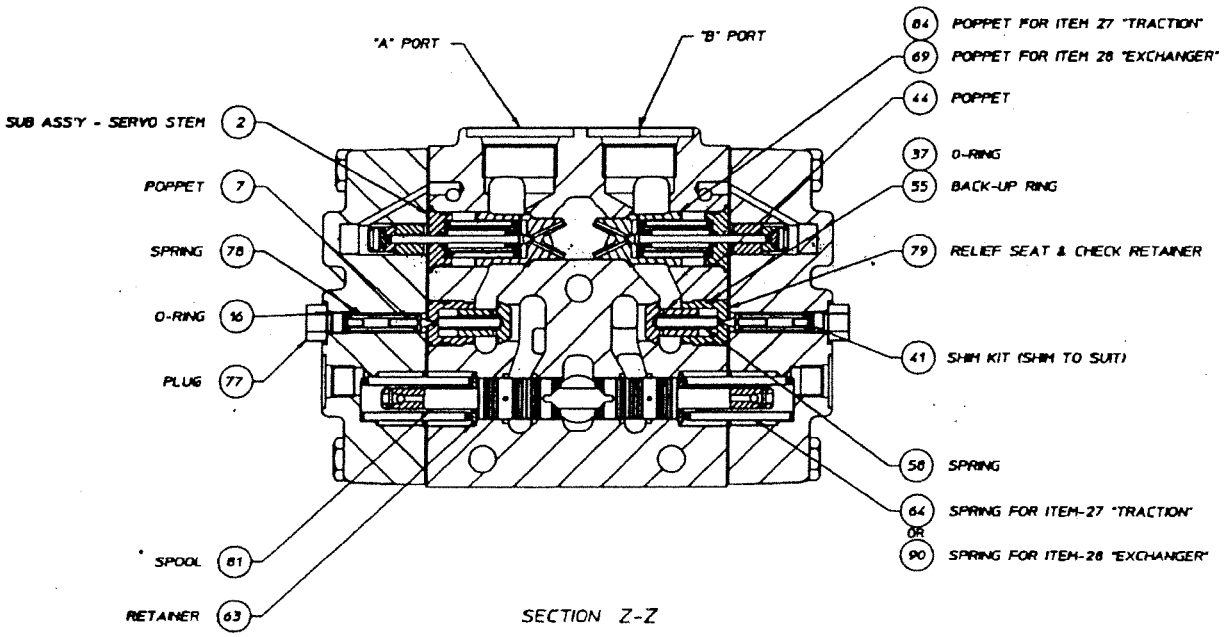

SECTION Z-Z

TRX WORKHEAD VALVE ASSY
C9480P25 EXCHANGER LIFT SECTION
DWG NO C9629W
SECTION J-12
SHEET 6 OF 6

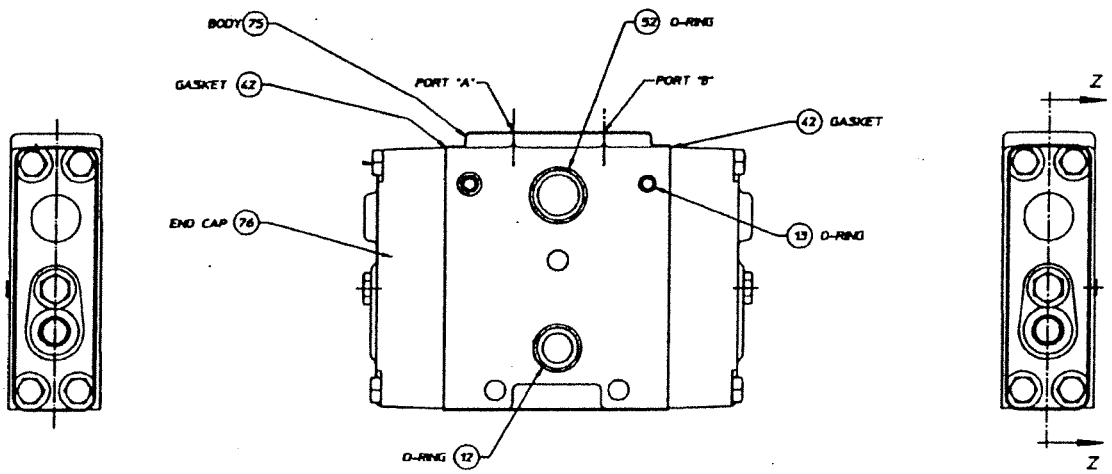

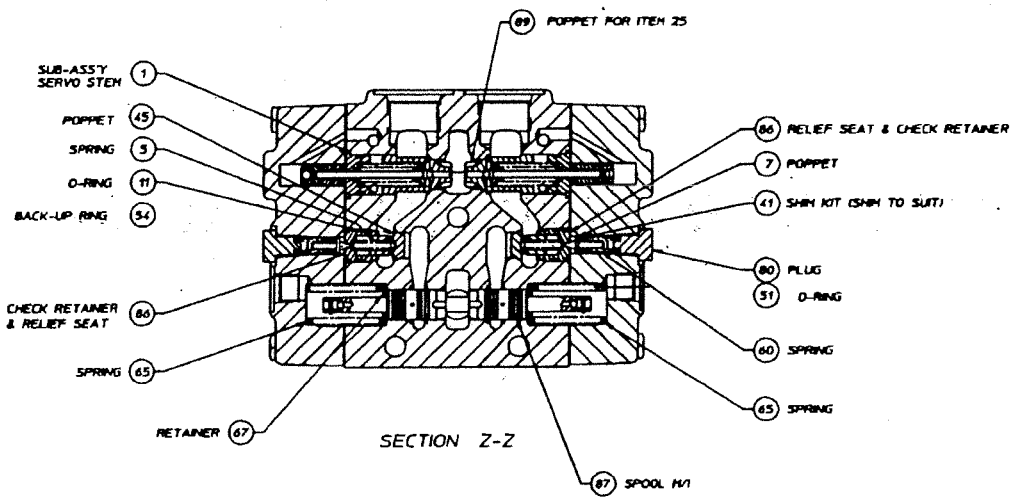

EXTRACTOR CYLINDER ASSY
(3 1/4" BORE, 1 3/4" ROD)

SECTION J-13 DWG.NO. B9077XAC

ITEM		DESCRIPTION	PART NUMBER	QTY
002	*	WEAR BAND	0-3390001-0-12	2
003	*	O-RING	B5392Y15	1
004	*	ROD WIPER (SLOTTED)	0-3393000-0-11	1
005	*	BACK-UP RING	B5401Y09	1
006	*	ROD SEAL	B5416Y07	1
007	*	PISTON SEAL	B5400709	1
010		SEAL KIT (SEE NOTE BELOW)	B9078YAA	1
011		CYLINDER BODY ASSY	B9084XAA	1
012		ROD & LUG ASSY	B5677XAM	1
013		ROD BUSHING	B9085X01	1
014		PISTON	B9086X01	1
015		STOP TUBE (1-15/16 LG)	A0576T91	1
019		O-RING PLUG (FLUSH)	0-3304203-0-06	1
020		5/16-18 X 1 SH SETSCR	A0062076	1
021	*	O-RING	B5392Y26	1
022		STOP TUBE (6" LG)	C1137T50	1

NOTE:

ITEMS MARKED WITH ASTERISK (*) ARE INCLUDED IN THE SEAL KIT.

EXTRACTOR CYLINDER ASSY
DWG NO B9077XAC
SECTION J–13
REV 8

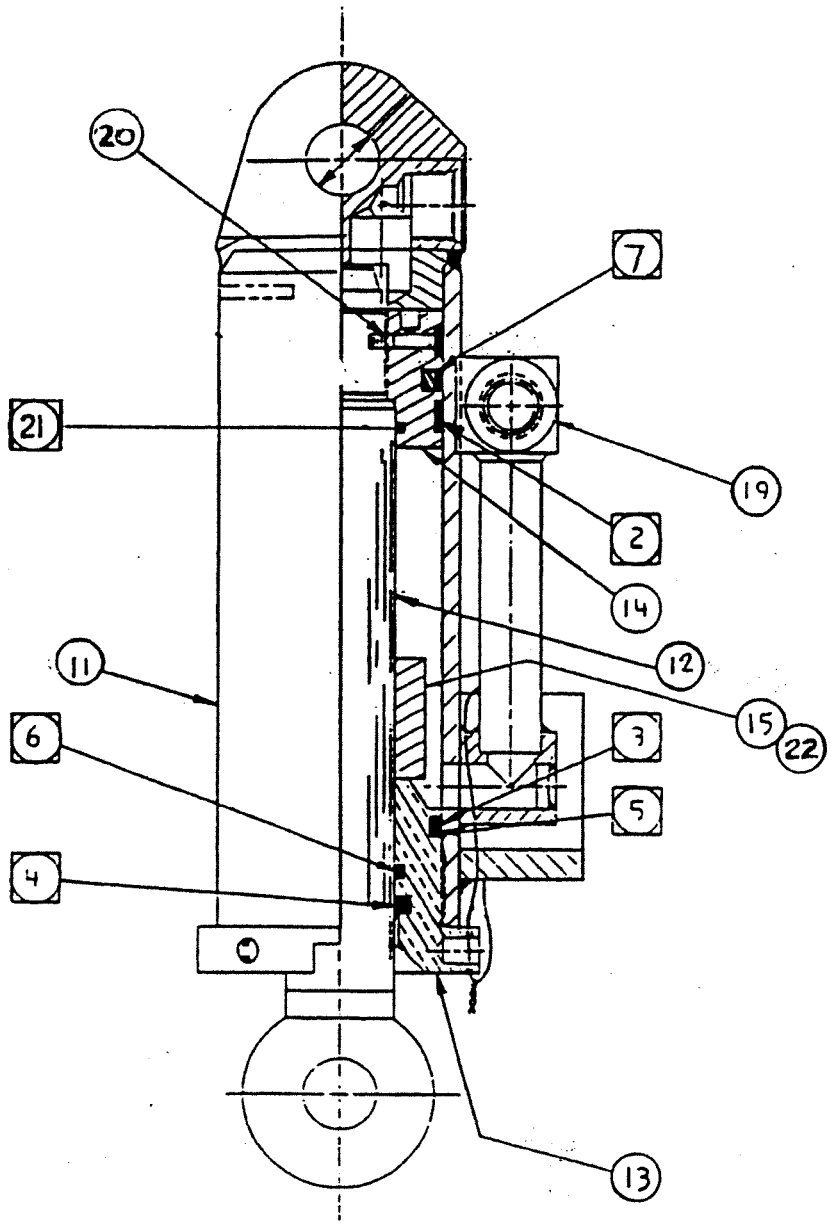

10 SEAL KIT – INCLUDES ALL ITEMS MARKED REF

(3 1/4"BORE, 1 3/4 ROD)

PIVOT HEAD CYLINDER
DWG NO G3588YAA
SECTION J–14
REV 1

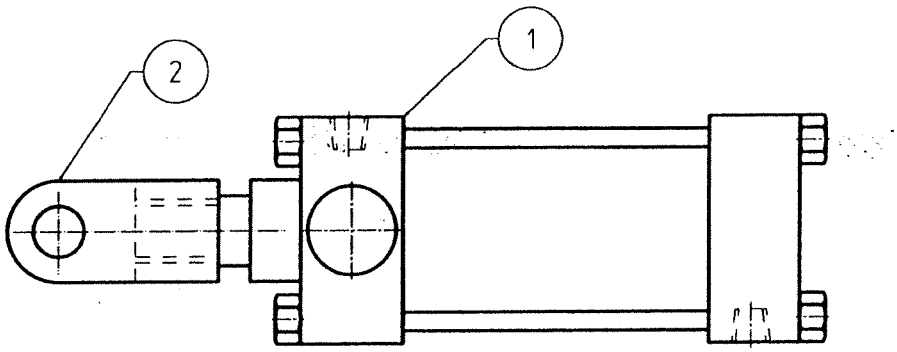

ITEM	PART NUMBER	DESCRIPTION	QTY
2	G3585Y01	CLEVIS	1
1	A4904Y03	PIVOT HEAD CYLINDER	1

JAW CYLINDER ASSY
(3" BORE, 1 1/2" ROD, 7" STROKE)

SECTION J-15 DWG.NO. B5704XAF

ITEM	DESCRIPTION	PART NUMBER	QTY AF	QTY SL KIT
001	*THREAD RETAINER COMP	0-3040000-0-16		1
002	*WEAR BAND	0-3390001-0-06		2
003	*O-RING	B5392Y04		1
004	*ROD WIPER (SLOTTED)	0-3393000-0-07		1
005	*BACK-UP RING	B5401Y04		1
006	*ROD SEAL	B5416Y01		1
007	*PISTON SEAL	B5400Y04		1
009	1/4-20 X 3/4 SH SETSCR	A0062017	1	
010	SEAL KIT (SEE NOTE BELOW)	B5429YAA	1	
013	ROD BUSHING	B5497X01	1	
014	PISTON	B5458X01	1	
017	*O-RING	B5392Y25	1	
026	3" CYLINDER BODY ASSY	B5690XAL	1	
027	ROD & LUG ASSY	B5677XBB	1	
028	PLAIN BUSHING	0-3652009-0-04	2	
029	PIPE (1 1/2 NOM X 1" LG)	C3013T24	1	

NOTE:

ITEMS MARKED WITH ASTERISK (*) ARE INCLUDED IN THE SEAL KIT.

JAW CYLINDER ASSY
DWG NO B5704XAF
SECTION J–15

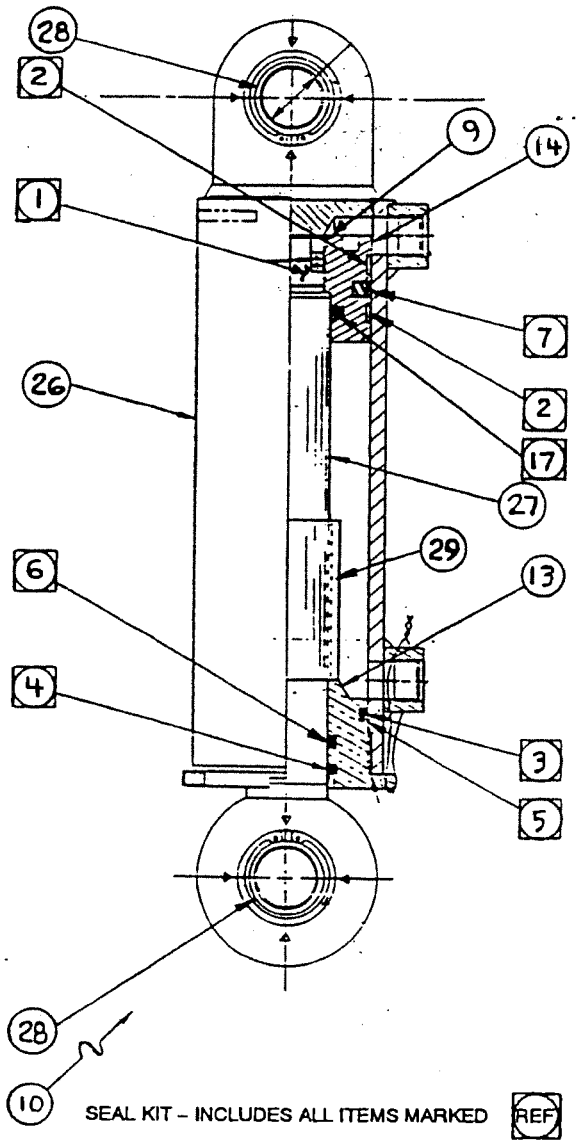

SEAL KIT – INCLUDES ALL ITEMS MARKED REF

RAIL CLAMP CYLINDER ASSY

SECTION J-16

DWG.NO. X683361A (56 1/2" GA)
DWG.NO. X683361E (42" GA)

ITEM	DESCRIPTION	PART NUMBER	QTY 1A	QTY 1E
001	CYL BODY WELD ASSY	Z683493	1	1
004	CAP BUSHING	0-1203092-0-01	1	1
005	SEAL KIT	0-3379001-0-01	1	1
006	RETAINING WASHER	Z681209	1	1
007	RETAINING WASHER	Z681208	1	1
008	O-RING	L40022	1	1
010	SELF LOCKING NUT	L420520	1	1
012	O-RING	L41242	1	1
014	5/16-24 X 3/4 HSHD CAPSCR W/ NYLOK	A0043057	6	6
016	WIPER RING	L40395	1	1
023	ROD & CLEVIS WELDMENT	0-2305218-0-01	1	0
027	ROD & CLEVIS WELDMENT	0-2305218-0-06	0	1
029	PISTON ROD SEAL	0-3395000-1-10	1	1
031	UNITIZED PISTON w/ SEAL	D4676X01	1	1

RAIL CLAMP CYLINDER ASSY
DWG NO X683361A (56 1/2" GA)
DWG NO X683361E (42" GA)
SECTION J–16

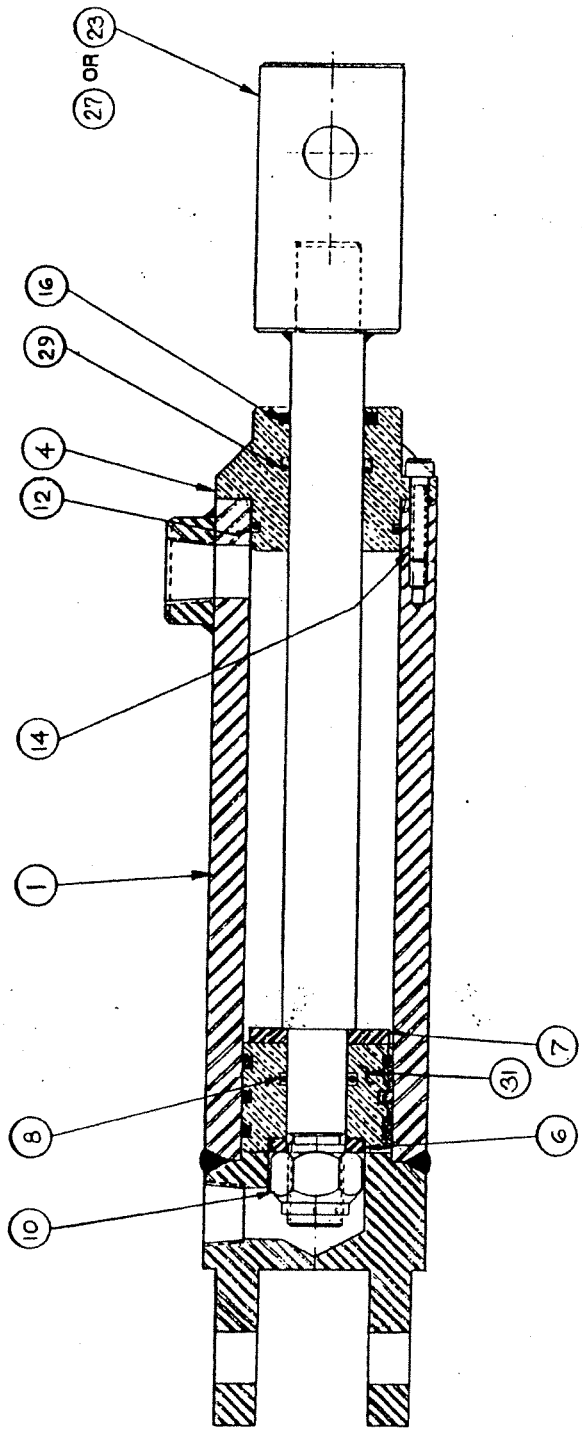

5 SEAL KIT NO 0-3379001-0-01

CYLINDER & LOCK-UP ASSY
(5" BORE X 2" ROD X 16" CYL)

SECTION J-17

DWG.NO. B5996XAF (w/o LOCK-UP)
DWG.NO. B5996XAG (w/ LOCK-UP)

ITEM	DESCRIPTION	PART NUMBER	QTY AF	QTY AG	QTY SL	QTY KIT
001	*THREAD RETAINER COMP	0-3040000-0-16				1
002	*WEAR BAND	0-3390001-0-04				2
003	*O-RING	B5392Y06				1
004	*ROD WIPER (SLOTTED)	0-3393000-0-06				1
005	*BACK-UP RING	B5401Y06				1
006	*ROD SEAL	B5416Y02				1
007	*PISTON SEAL	B5400Y06				1
010	SEAL KIT (SEE NOTE BELOW)	B5431YAA	1			
013	ROD BUSHING	B5499X01	1			
014	PISTON	B5460X01	1			
017	CYLINDER ASSY (16" ST)	B5996XAF		1		
018	SPHERICAL BEARING	0-3652001-0-11	2			
019	RETAINING RING	L40001	4			
020	CYLINDER BODY ASSY	B6007XAG	1			
021	1" MED PL WASHER	A0059010		2		
022	1/4 X 2" COTTER PIN	A0068030		2		
023	PIN (RCO)	Y691328-099		1		
026	1/4-20 X 1 HH CAPSCR	A0036005		1		
027	1/4-20 LOCK NUT	L41157		1		
028	AIR CYLINDER	L424468		1		
029	1/4-20 HEX JAM NUTS	A0056001		1		
030	CLEVIS & PIN	L420854		1		
031	HOOK WELDMENT	0-2202333-0-01		1		
033	ROD & LUG ASSY	B5677XAZ	1			
034	3/8-16 X 3/4 SOC SETSCR	A0062029	1			
035	*O-RING	B5392Y28				1

NOTE:

ITEMS MARKED WITH ASTERISK (*) ARE INCLUDED IN THE SEAL KIT.

CYLINDER & LOCK-UP ASSY
DWG NO B5996XAF (w/o LOCK-UP)
DWG NO B5996XAG (w/ LOCK-UP)
SECTION J-17

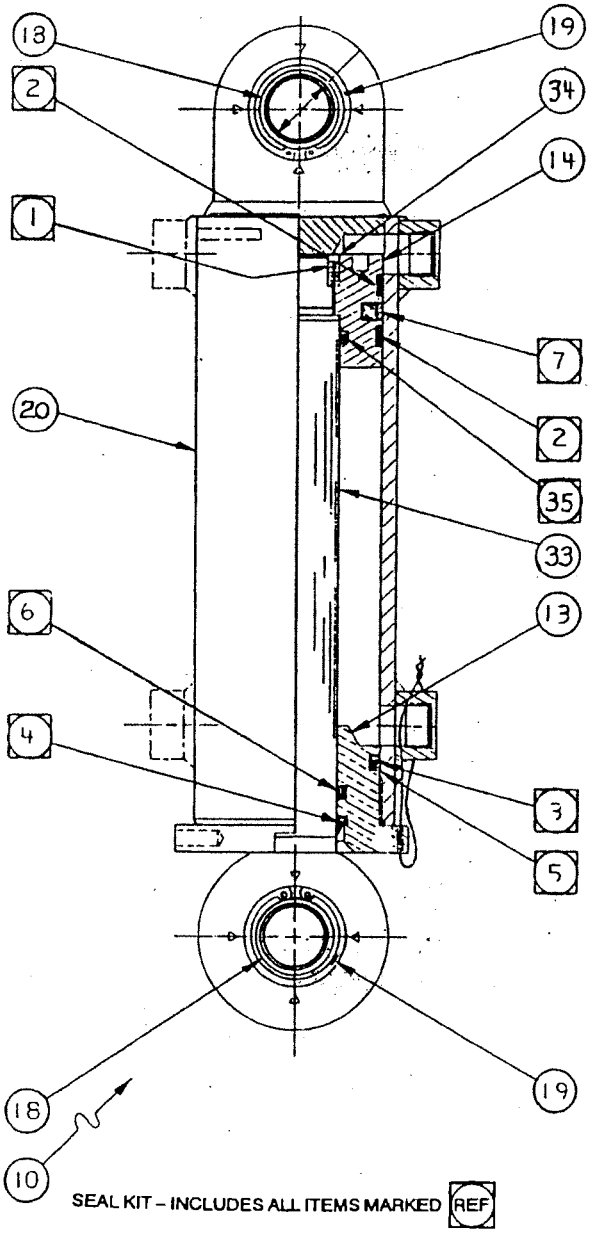

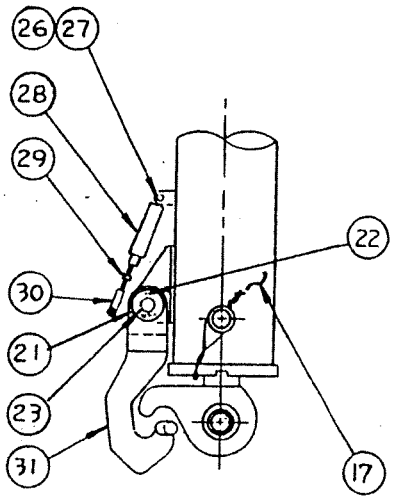

CONFIDENTIAL
© COPYRIGHT 2001 HARSCO TRACK TECHNOLOGIES. THIS DRAWING OR DOCUMENT IS THE PROPERTY OF HARSCO TRACK TECHNOLOGIES AND EMBODIES CONFIDENTIAL INFORMATION, TRADE SECRET INFORMATION, AND/OR KNOW-HOW THAT IS THE PROPERTY OF HARSCO TRACK TECHNOLOGIES. BY ACCEPTING THIS DRAWING OR DOCUMENT, THE RECIPIENT AGREES (1) NOT TO PROVIDE, OR OTHERWISE MAKE AVAILABLE, THE DRAWING OR DOCUMENT, OR ANY INFORMATION OR KNOW-HOW EMBODIED THEREIN, TO ANY THIRD PARTY AND (2) NOT TO REPRODUCE OR USE THE DRAWING OR DOCUMENT TO MANUFACTURE ANY APPARATUS OR DEVICE, WITHOUT THE PRIOR WRITTEN AUTHORIZATION OF HARSCO TRACK TECHNOLOGIES.

SOLID EDGE DRAWING

SECTION J-18A

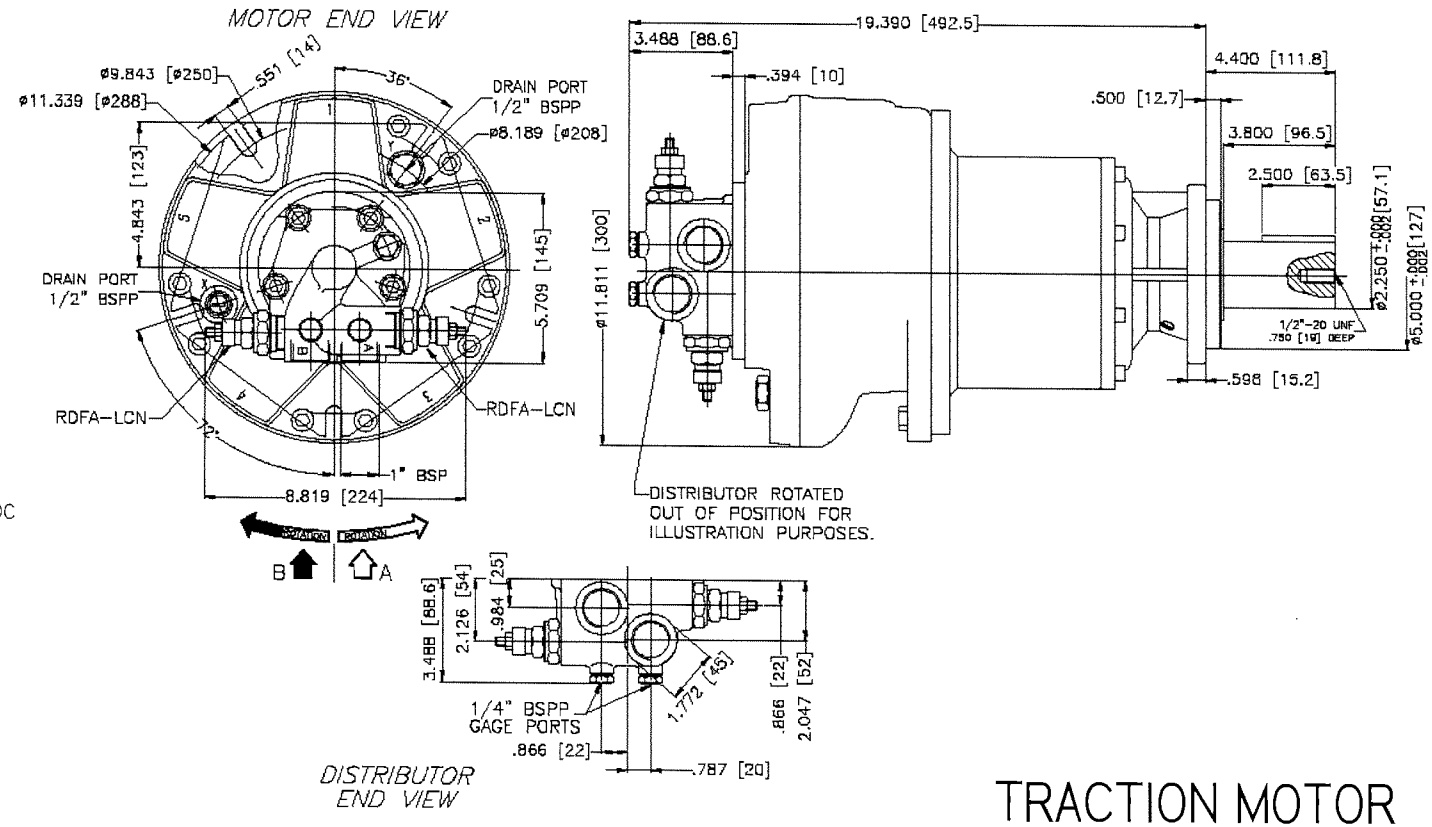

VENDOR SAI HYDRAULICS, INC.

COMPLETE UNIT DESCRIPTION:
US0052110085 - GM2 500 9H D48A/RS 200 MOC

MOTOR CONSISTS OF;

0052110085
GM2 500 9H D48A NO SPRINGS

RS 200-MOC
NO GEAR SET, HOUSING ONLY

M23S-10
MOD. MOUNTING FLANGE M2/M3/GM2

M23S-20
MOD. INT. SHAFT ADAPT. M2/M3/GM2

TRACTION MOTOR

IMPLIED TOLERANCES
ALL DIMENSIONS ARE IN INCHES - TOLERANCE UNLESS OTHERWISE SPECIFIED

NOMINAL SIZE RANGE		INCH PLUS OR MINUS		NOMINAL SIZE RANGE		METRIC PLUS OR MINUS	
OVER	TO	2 PLACE DECIMAL	3 PLACE DECIMAL	OVER	TO	1 PLACE DECIMAL	2 PLACE DECIMAL
0	6	.03	.005	0	150	.8	.13
6	24	.04	.008	150	600	1.0	.20
24	-	.06	.010	-	600	1.5	.25

UNLESS OTHERWISE SPECIFIED ALL MACHINED SURFACES WILL HAVE:
A SURFACE FINISH OF 125 MICROINCHES
ANGULAR TOLERANCE OF ± .50°
CONCENTRICITY WITHIN .010

THIRD ANGLE PROJECTION

UNLESS OTHERWISE SPECIFIED ALL WELDS SHOULD ADHERE TO THE LATEST HTT WELDING SPECIFICATION 101

CHANGE	R/L	REVISION		DATE
10055.1	1	NEW RELEASE	LES/WHC/HWJ	4-30-97
10273.1	2	CASING BOLTS CHANGED.	LES/WHC/JA	--------
100464	C	VENDOR P/N WAS, GM2-500-9-D310B-WPB-RS175-MOC-M23S MOVED DRAWING TO SOLID EGDE.	HH/DES/APD	04-25-06

Description	HYDRAULIC MOTOR ASSEMBLY
Drawing Number	----------
Machine Type	TRIO (NS)
Model	NOT RELATED
Drawn	hhill
Date Drawn	04-25-06
Weight	
Scale:	
APVD Desg	DES
APVD ChEng	APD
Mat'l	SEE ABOVE
Part Number	0-3324000-0-11
Size	B
Sheet	1 of 1

HTT
Harsco Track Technologies
Harsco
Columbia, SC

Plotted by hhill on 8/29/2006 0-3324000-0-11.dft

SECTION J-19

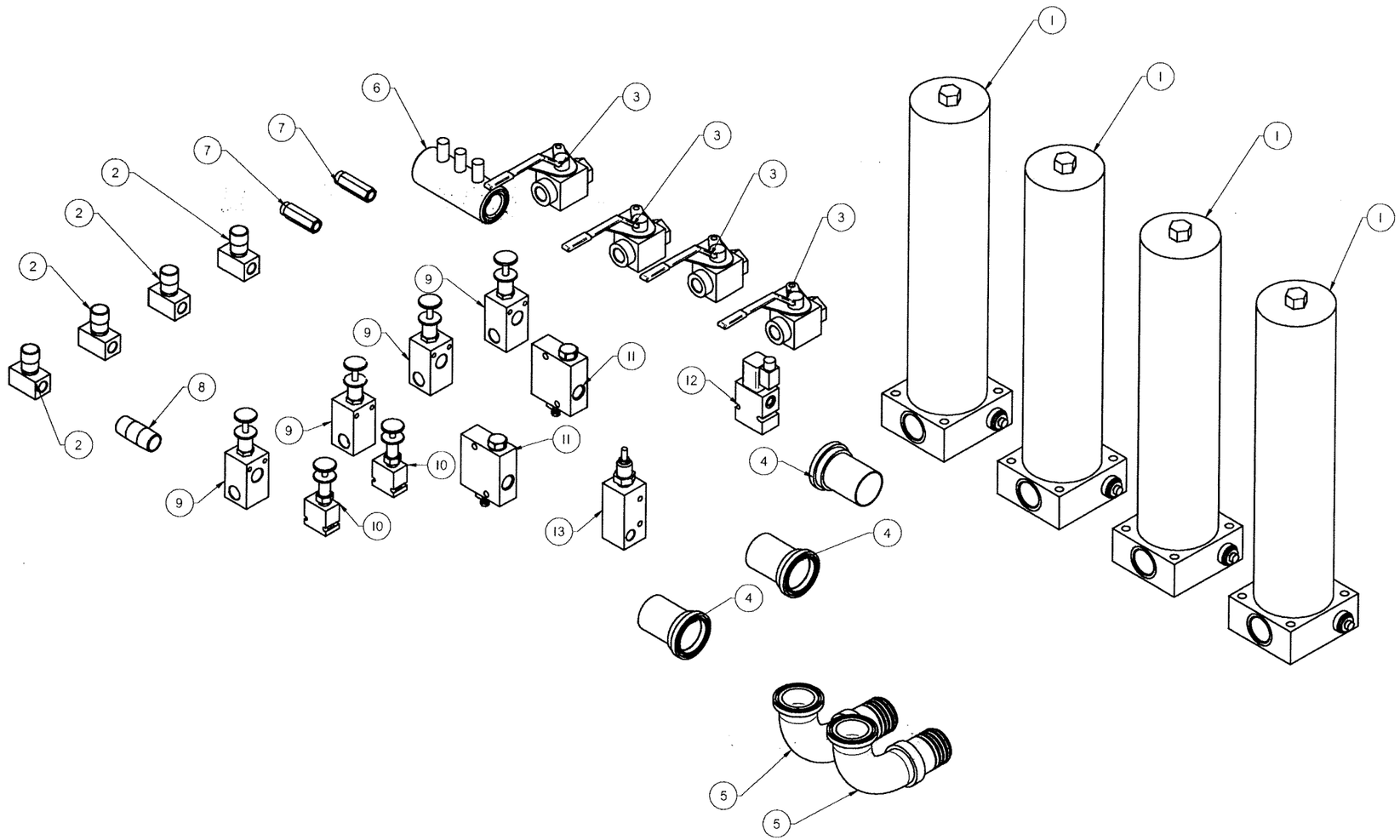

Item Number	Part Number	Description	Quantity
1	4011632	HYD HIGH PRESSURE FILTER	4
2	L421120	FLOW CONTROL -8 FP	4
3	4011865	BALL VALVE,PAD-LOCKINGT	4
4	C3538YAG	STR HOSE STEM W/SAE FLG	3
5	0-330420I-0-10	ELBOW 90 SPLIT FLG -40	2
6	C9677Y01	MONITORING SYSTEM	1
7	L41209	CHECK VALVE 3/8 NPT	2
8	Z753146-143	1" THD PIPE NIPPLE 3" - LG	1
9	4011872	RELIEF VALVE 3/4 NPT	4
10	4011868	RELIEF VALVE	2
11	A2130Y02	PRESSURE RED VALVE	2
12	157866-1	VALVE, 2 WAY SOL	1
13	4011866	PRESSURE REDUCING VALVE	1

CONFIDENTIAL

© COPYRIGHT 2001 HARSCO TRACK TECHNOLOGIES. THIS DRAWING OR DOCUMENT IS THE PROPERTY OF HARSCO TRACK TECHNOLOGIES AND EMBODIES CONFIDENTIAL INFORMATION, TRADE SECRET INFORMATION, AND/OR KNOW-HOW THAT IS THE PROPERTY OF HARSCO TRACK TECHNOLOGIES. BY ACCEPTING THIS DRAWING OR DOCUMENT, THE RECIPIENT AGREES (1) NOT TO PROVIDE, OR OTHERWISE MAKE AVAILABLE, THE DRAWING OR DOCUMENT, OR ANY INFORMATION OR KNOW-HOW EMBODIED THEREIN, TO ANY THIRD PARTY AND (2) NOT TO REPRODUCE OR USE THE DRAWING OR DOCUMENT TO MANUFACTURE ANY APPARATUS OR DEVICE, WITHOUT THE PRIOR WRITTEN AUTHORIZATION OF HARSCO TRACK TECHNOLOGIES.

SOLID EDGE DRAWING

IMPLIED TOLERANCES
ALL DIMENSIONS ARE IN INCHES TO THE NEAREST UNLESS OTHERWISE SPECIFIED

	INCH				METRIC			
DRAWING DIMENSION	DECIMAL			DRAWING DIMENSION	DECIMAL			
		ANGULAR DIMENSIONS	ANGULAR DIMENSIONS			ANGULAR DIMENSIONS	ANGULAR DIMENSIONS	
0	0	0.0	0.00	0	0.0	0.0	0.00	
2	2.1	2.0	2.00	2	2.0	2.0	2.00	
3	3.1	3.0	3.00	3	3.0	3.0	3.00	

UNLESS OTHERWISE SPECIFIED ALL MACHINED SURFACES WILL HAVE
A MAXIMUM ROUGHNESS VALUE OF 125 RMS AND A LAY TOLERANCE OF ± 20° UNLESS NOTED OTHERWISE ON THIS DRAWING

THIRD ANGLE PROJECTION

UNLESS OTHERWISE NOTED, ALL ANGULAR DIMENSIONS ARE ± 1.0° UNLESS NOTED OTHERWISE

CHANGE	R/L	REVISION	DATE
100560	A	RELEASE	06-02-06

Description: NS HYDRAULIC COMPONENTS

Drawing Number: ----------

Model: 4011891.asm

Weight: 0.000 lbm | Scale: 1:4

Math

Motion Type

Drawn: mtrippe | Date Drawn: 06-02-06

Appr. Dwg: HH | Appr. Dwg: APD

ITT
Harsco Track Technologies
Harsco
Columbia, SC

Part No./Size: 4011891 | Size: D | Sheet: 1 of 1

Plotted by mtrippe on 6/5/2006 4011891.dft

PARTS LIST

ITEM NO	PART NUMBER	DESCRIPTION	QUANTITY
1	D4615WAA	HYD TANK WLDT	1
2	D4185WAD	RETURN COVER WLDT	1
3	0-1404519-0-01	OIL TANK GASKET	1
4	BLANK		
5	D4649Y01	TANK FLANGE GASKET	2
6	A0036063	3/8-16 X 1 HHCS	66
7	A0061010	3/8 MEDIUM LOCK WASHER	66
8	BLANK		
9	C9249Y05	IN TANK RETURN FILTER	2
10	BLANK		
11	BLANK		
12	G4164WAD	FILLER COVER WLDT.	2
13	Z768731-001	SHOCK MOUNT (LG)	8
14	Z768730-001	SHOCK MOUNT (SM)	8
15	D4176Y01	MAGNET SUCTION SEPARATOR	2
16	L40672	1" HEX PIPE PLUG	3
17	D4656Y02	TANK MOUNTING BRKT.	2
18	A0036186	5/8-11 X 4 HHCS	8
19	L41415	2 1/2 X 1 1/2 NPT BUSH	2
20	L411407	1/2 NPT PLUG	5
21	L423626	EL, -20MP-FP 90° BK PIPE	2
22	0-3381006-0-03	FLUID LEVEL GAGE W/THERM	1
23	A0059007	5/8 MEDIUM FLAT WASHER	8
24	BLANK		
25	L424184	JIC TO MPT	2
26	L411394	1 1/4 x 1" BUSHING	1
27	L40006	5/8-11 Locknut,Heavy	8
28	0-3304009-0-03	ADAPTER O-RING BOSS	3
29	Z753146-126	THREADED PIPE	2
30	BLANK		
31	L423785	1/2MP/3/4JIC 90°	2
32	L411538	1 1/2 NPT X TEE	2
33	BLANK		

ASSEMBLY IDENTIFIER

DWG NO: D4616VAB

SHEET 1 / CONT ON 2

DESCRIPTION (24): HYDRAULIC TANK ASSY.

DRAWN: HH — DATE: 10-4-04

CHECKED: DEB — DATE: 10-4-04

APP: APD — DATE: 10-4-04

TR10 NS 2004

REVISIONS

NO	ER	DESCRIPTION	DR	CK	APP	MF
A	13080.13	NEW RELEASE	HH			
B	13117.15	IT. 13 & 14 DESCRIPTION CHANGE. 5-18-05	HH	JO	APD	

SHEET 1 / CONT ON 2

LAST ECR: 13117.15 — CHECKED: dvan — DATE: 19-May-05

DWG NO: D4616VAB

ASSEMBLY DESCRIPTION

ER / DR / CK / APP / MF

Fairmont Tamper™
2401 Edmund Road-Box 20
Cayce-West Columbia,
South Carolina 29171-0020
(803) 822-9160

PARTS LIST

ITEM NO	PART NUMBER	DESCRIPTION	QUANTITY
34	0-3304203-0-08	SOCKET HEAD O-RING PLUG	2
35	BLANK		
36	0-3304186-0-03	1" FP NPT CROSS	1
37	L411415	1" MP HEX NIPPLE	1
38	L40506	1 1/2 X 1 NPT BUSH	1
39	A0036125	1/2-13 X 2 HHCS	8
40	A0061013	1/2 MEDIUM LOCK WASHER	8
41	0-3380000-0-03	FLOW DIFFUSER 2 1/2 NPT	2
42	0-3304132-0-08	REDUCER	1
43	L420004	FTG. 1/2 MP - JIC 90°	1
44	0-3304057-0-03	TEE FLARE/TUBE	1
45	BLANK		
46	BLANK		
47	0-3304142-0-07	FITTING	2
48	L411372	JIC TO MPT	1
49	0-3304132-0-07	REDUCER	2
50	L420008	1" MP/-16 JIC 90°	2
51	BLANK		
52	0-3304132-0-03	REDUCER	1
53	A2391YAB	90° HOSE STEM W/SAE FLG	2
54	0-3304148-0-06	SW JIC/90/JIC FITTING	2
55	BLANK		
56	BLANK		
57	L426080	O-RING BOSS/FLARE	1
58	BLANK		
59	BLANK		
60	BLANK		
61	BLANK		
62	BLANK		
63	0-3304148-0-11	SW JIC/90/JIC FITTING	2
64	BLANK		
65	BLANK		
66	BLANK		

ASSEMBLY IDENTIFIER

TR10 NS 2004

ASSEMBLY DESCRIPTION

ER
DR
CK
APP
MF

REVISIONS

NO	ER	DESCRIPTION	DR	CK	APP	MF
A	13080.13	NEW RELEASE	HH			
B		NO CHANGE				

SHEET 2 CONT ON 3

LAST ECR 13117.15

CHECKED dvan

DATE 19-May-05

DWG NO D4616VAB

DWG NO D4616VAB

SHEET 2 CONT ON 3

DESCRIPTION (24) HYDRAULIC TANK ASSY.

DRAWN HH DATE 10-4-04

CHECKED DEB DATE 10-4-04

APP APD DATE 10-4-04

APP DATE

Fairmont Tamper™
2401 Edmund Road-Box 20
Cayce-West Columbia,
South Carolina 29171-0020
(803) 822-9160

PARTS LIST

ASSEMBLY IDENTIFIER

ITEM NO	PART NUMBER	DESCRIPTION	QUANTITY
67	BLANK		
68	BLANK		
69	BLANK		
70	BLANK		
71	0-3305019-0-03	HARD LINES	2
72	0-3304120-0-11	NUT	2
73	0-3304121-0-12	SLEEVE	2
74	BLANK		
75	BLANK		
76	BLANK		
77	L41387	PUMP FLANGE	2
78	BLANK		
79	BLANK		
80	BLANK		
81	BLANK		
82	0-3304174-0-03	KING NIPPLE	1
83	L425045	FTG 1 1/4 MP-FP-FP	1
84	L41386	2 1/2 X 1 1/4 BUSHING	2
85	L424551	1 1/4 KING NIPPLE	1
86	BLANK		
87	BLANK		
88	L411384	JIC TO MPT	2

DWG NO D4616VAB
SHEET 3
CONT ON -
DESCRIPTION (24) HYDRAULIC TANK ASSY.
DRAWN HH
DATE 10-4-04
CHECKED DEB
DATE 10-4-04
APP APD
DATE 10-4-04
APP
DATE

TR10 NS 2004

REVISIONS

NO	ER	DESCRIPTION	DR	CK	APP	MF
A	13080.13	NEW RELEASE	HH			
B		NO CHANGE				

ASSEMBLY DESCRIPTION

ER
DR
CK
APP
MF

SHEET 3
CONT ON -
LAST ECR 13117.15
CHECKED dvan
DATE 19-May-05
DWG NO D4616VAB

Fairmont Tamper™
2401 Edmund Road-Box 20
Cayce-West Columbia,
South Carolina 29171-0020
(803) 822-9160

D4616VAB

NO	ER	DESC	ZONE	DR	CK	APP	MF
A	[illegible]	NEW RELEASE		MH			
B	[illegible]	[illegible]	[illegible]	MH	JO	APD	5-18-05

SECTION J-20

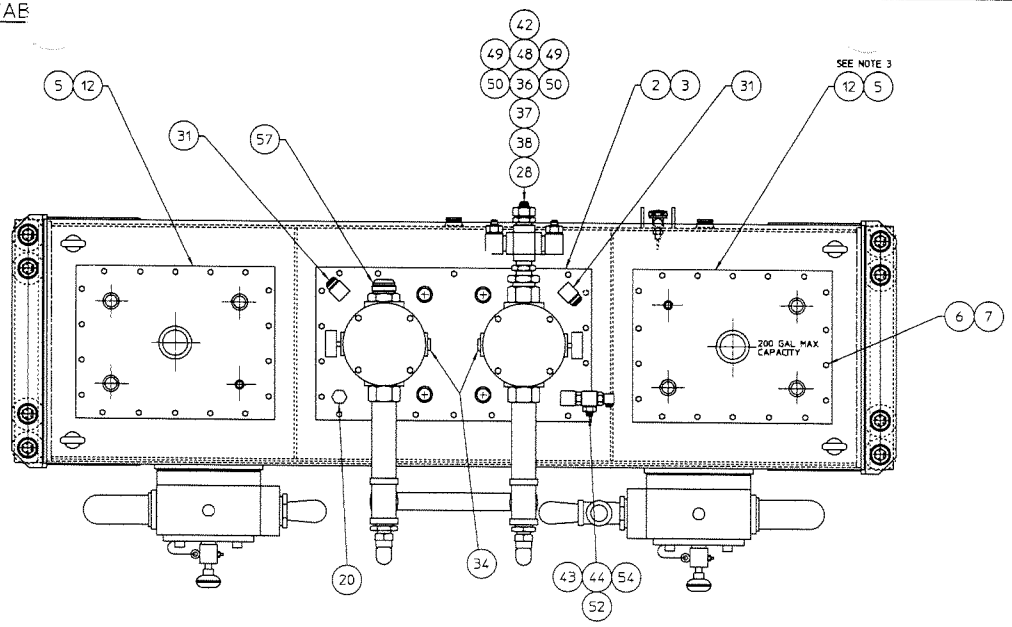

NOTES:

1. PERFORATED SIDE OF FLOW DIFFUSERS (ITEM 41) IS TO BE DIRECTED TOWARD TANK WALL (AS SHOWN).
2. CAP OR PLUG ALL OPEN LINES AND OR FITTINGS TO PREVENT CONTAMINANTS FROM ENTERING HYDRAULIC SYSTEM.
3. STAMP RESERVOIR "200 GALLONS MAXIMUM CAPACITY", 1/2" HIGH LETTERS NEXT TO FILLER CAP.
4. REF: SILICONE FORM-A-GASKET P/N: L425072

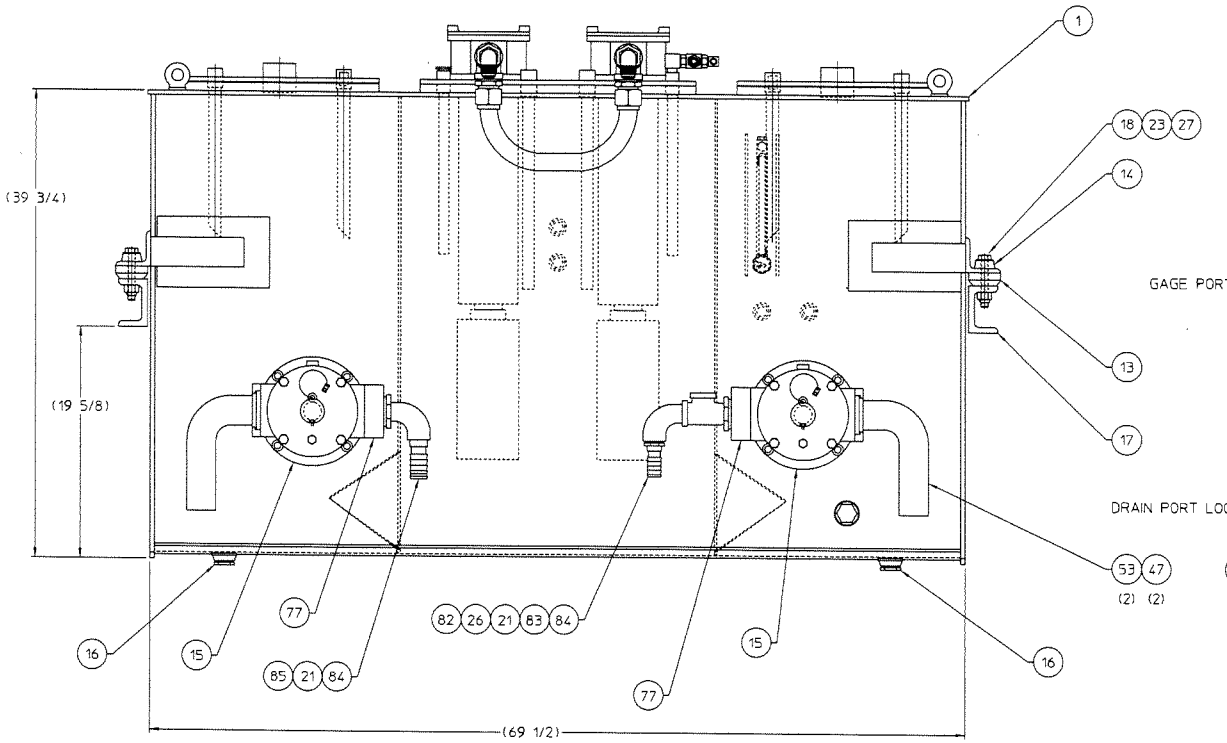

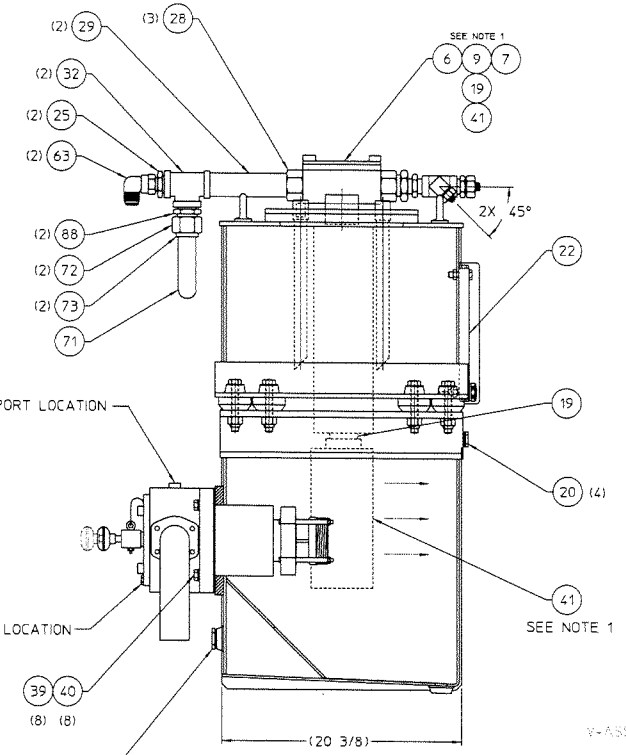

200 GALLON CAPACITY

SEE SEPARATE PARTS LIST

FIG NO.	ITEM NO.	PART NUMBER	DESCRIPTION AND MATERIAL SIZE (REF.ONLY)	QTY

IMPLIED TOLERANCES
ALL DIMENSIONS ARE IN POINTS-TOLERANCE UNLESS OTHERWISE SPECIFIED

NOMINAL SIZE RANGE		PLUS OR MINUS			NOMINAL SIZE RANGE		PLUS OR MINUS		
OVER	TO	FRACTION	2 PLACE DECIMAL	3 PLACE DECIMAL	OVER	TO	FRACTION	2 PLACE DECIMAL	3 PLACE DECIMAL
-	1	1/64	±1	.005	6	24	1/32	.03	.008
1	6	1/32	.02	.005	24	-	1/16	.05	.010

ANGULAR DIMENSIONS PLUS OR MINUS 1 DEGREE
ALL MACHINED SURFACES TO HAVE A SURFACE FINISH OF 125 MICROINCHES UNLESS OTHERWISE SPECIFIED

WELDING SPECIFICATION

UNLESS OTHERWISE SPECIFIED ALL WELDS SHOULD ADHERE TO FAIRMONT TAMPER WELDING SPECIFICATION NO. 101

WEIGHT

DO NOT SCALE

SHEET 1 OF 1

DESCRIPTION	HYDRAULIC TANK ASSY.		
DRAWN MH	DATE 10-4-04	MACHINE TYPE TR10	
CHECKED DEB	DATE 10-4-04	Fairmont Tamper	
APPROVED APD	DATE 10-4-04		
CONFORM	DATE		
LAST REV. 13117 .15	DATE 19-May-05	SIZE D	DRAWING D4616VAB

THIS DOCUMENT CONTAINS PROPRIETARY INFORMATION AND SUCH INFORMATION MAY NOT BE DISCLOSED TO OTHERS FOR ANY PURPOSE OR USED FOR MANUFACTURING PURPOSES WITHOUT THE WRITTEN PERMISSION OF FAIRMONT TAMPER

ITEM NO.	NUMBER	DESCRIPTION	QTY
1	4011624	PVM098 PUMP	X
2	4011622	VANE DOUBLE PUMP	X
3	4011623	V10 PUMP	X
4	0-3316003-0-04	EMERGENCY PUMP (24VDC)	X
5	4011865	BALL VALVE, PAD-LOCKING	X
6	C9677Y01	MONITORING SYSTEM	X
7	4011872	RELIEF VALVE 3/4 NPT	X
8	0-3336021-0-07	IN LINE CHICK VALVE -16FP 5 PSI	X
9	4011632	HYD HIGH PRESSURE FILTER	X
10	0-3336021-0-31	IN LINE CHICK VALVE -20FP 3 PSI	X
11	4011625	SOLENOID RELIEF VALVE	X
12	A0729Y04	VALVE, 2 WAY SOL. OPER	X
13	A0963Y01	DO8 MANIFOLD (2 STATION)	X
14	4011659	DO8 HYD. PILOT OP. POR. V.	X
15	0-3360011-0-11	MANIFOLD ACCESSORIES (TAP PLATE A&B)	X
16	0-3360011-0-01	MANIFOLD ACCESSORIES (BLANK PLATE)	X
17	L425561	IN-LINE CHECK VALVE (95 PSI) (1 1/4 FP)	X
18	L424580	IN-LINE CHECK VALVE (65 PSI) (1"FP)	X
19	4011754	SELECTOR VALVE	X
20	A0730Y04	VALVE, 3 WAY, SOL. OP.	X
21	A0730Y01	VALVE, 3 WAY, SOL. OP.	X
22	4011866	VALVE, PRESSURE REDUCING (500 - 1500 PSI)	X
23	A5748Y01	IN-LINE HYD FILTER	X
24	0-3324000-0-11	HYDRAULIC MOTOR ASSEMBLY	X
25	L421386	SELECTOR VALVE	X
26	A6111Y02	SWITCH, PRESSURE	X
27	C9249Y05	IN TANK RETURN FILTER	X
28	0-3380000-0-03	FLOW DIFFUSER (2 1/2 NPT)	X
29	A2727YX01	OIL COOLER	X
30	0-33211020-0-01	GEAR MOTOR	X
31	D4176Y01	MAGNET SUCTION SEPARATOR	X
32	L41209	CHECK VALVE 3/8 NPT	X
33	C3950Y01	FAST COUPLING 1/4 NPT	X
34	A2130Y02	VALVE, PRESSURE REDUCING (100 - 3000 PSI)	X

ITEM NO.	PART NUMBER	DESCRIPTION	QTY
35	157866-1	VALVE, 28VDC SOLENOID	X
36	4011868	RELIEF VALVE	X
37	0-3307004-0-08	PRESSURE GAUGE (0 - 3000 PSI)	X
38	L421120	NEEDLE VALVE (1/2 NPT)	X
39	Y765715-001	MANIFOLD	X
40	4011653	SOLENOID VALVE	X
41	0-3361006-0-01	SUBPLATE NFPA DO3 STD	X
42	4011684	DO3 VALVE 2/4	X
43	4011687	DO8 MANIFOLD 6 STATIONS	X
44	4011712	DO5 TO DO8 MANIFOLD	X
45	6641	DO5 DBL. SOL. VALVE	X
46	0-3336036-0-01	SANDWICH CHECK VALVE (P- PORT DO5)	X
47	4011645	DO5 REDUCING/RELIEVING V.	X
48	4011661	DO5 HYD. PILOT OP. VALVE	X
49	4011802	DO8 SOL. 4/3 DIR. VALVE	X
50	L41380	PRESSURE SWITCH	X
51	A6645Y01	HYD. JOYSTICK	X
52	X683361A	HYD.CYL. (RAIL CLAMP)	X
53	A0173Y03	HYD. CYL. (EXCH. LIFT)	X
54	B9077XAC	HYD. CYL. (EXCH. CYL.)	X
55	B5704XAF	HYD. CYL. (TIE CLAMP)	X
56	A4904Y03	HYD. CYL. (SWIVEL HEAD)	X
57	B5996XAG	HYD. CYL. (RAIL LIFT)	X
58	X769757ZA	HYD. CYL. (RAIL LOCKOUT)	X
59	A0698Y06	TRACTION PEDAL	X
60	0-3336021-0-05	1 1/4 CHECK VALVE 5PSI	X
61			
62			
63			
64			
65			
66			
67			
68			

SECTION J-21

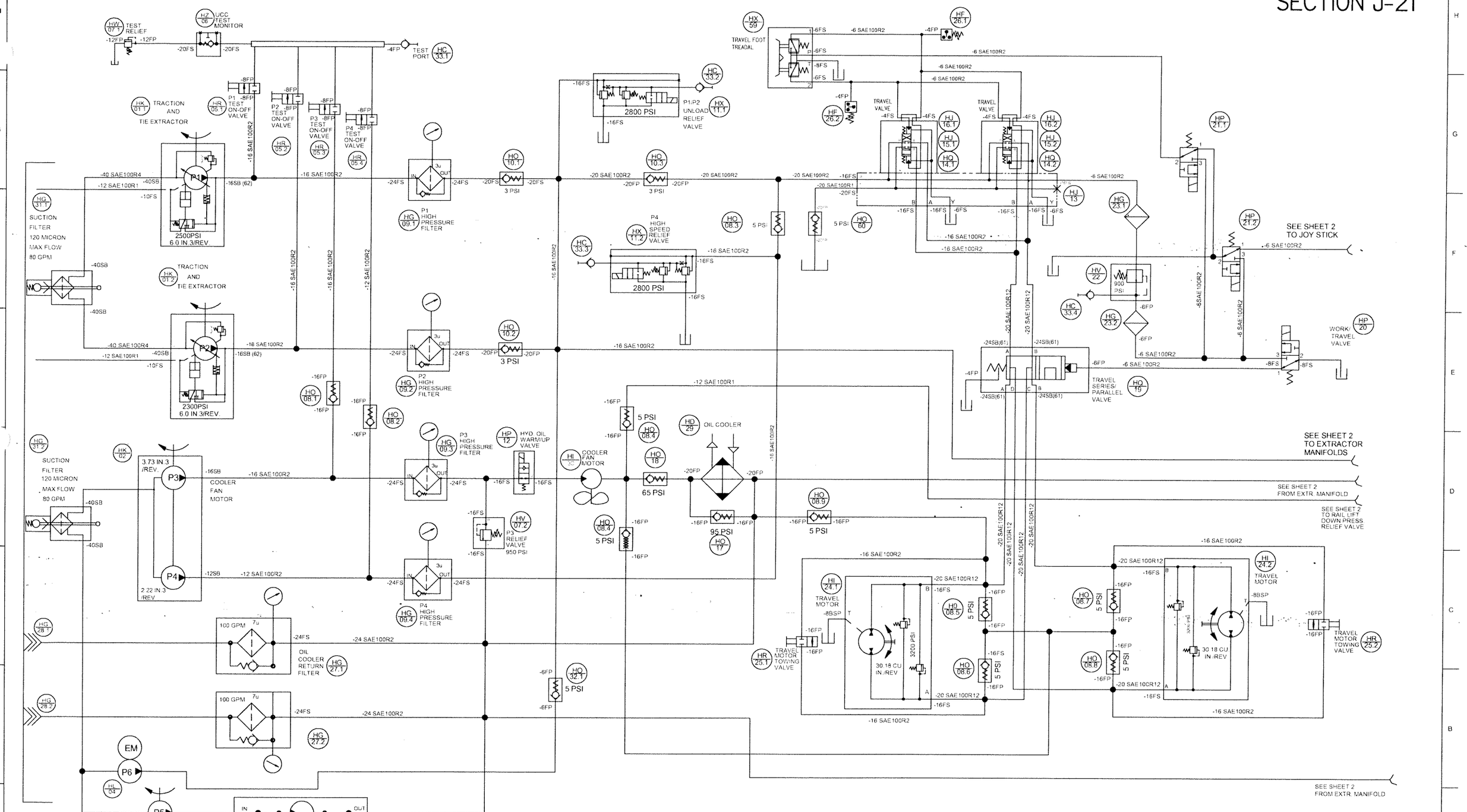

CONFIDENTIAL

© COPYRIGHT 2001 HARSCO TRACK TECHNOLOGIES. THIS DRAWING OR DOCUMENT IS THE PROPERTY OF HARSCO TRACK TECHNOLOGIES AND EMBODIES CONFIDENTIAL INFORMATION, TRADE SECRET INFORMATION AND/OR KNOW-HOW THAT IS THE PROPERTY OF HARSCO TRACK TECHNOLOGIES. BY ACCEPTING THIS DRAWING OR DOCUMENT, THE RECIPIENT AGREES (1) NOT TO PROVIDE, DIVULGE OR MAKE AVAILABLE THE DRAWING OR DOCUMENT, OR ANY INFORMATION OR KNOW-HOW EMBODIED THEREIN, TO ANY THIRD PARTY AND (2) NOT TO REPRODUCE OR USE THE DRAWING OR DOCUMENT TO MANUFACTURE ANY APPARATUS OR DEVICE WITHOUT THE PRIOR WRITTEN AUTHORIZATION OF HARSCO TRACK TECHNOLOGIES.

UNLESS OTHERWISE SPECIFIED DIMENSIONS ARE IN INCHES TOLERANCES ON DECIMALS: .XX ±.03 .XXX ±.010 ANGLES ±1°

	INCH			METRIC		
SIZE	FRACT.	DECIM.	MM	FRACT.	DECIM.	MM
1	1/2	.50	13	1/2	.50	13
2	1	1.00	25	1	1.00	25
3	1 1/2	1.50	38	1 1/2	1.50	38
4	2	2.00	50	2	2.00	50

THIRD ANGLE PROJECTION

INTERPRETATION OF GEOMETRIC TOLERANCING PER ASME Y14.5M-1994

CHANGE	REV	REVISION	DATE
ECN-00681	A	INIT. REL.	07-25-06
ECN-00681	B	ADDED ITEMS 17 - 59	07-25-06
ECN-100757	C	UP-DATED SCHEMATIC TO FINAL ASSEMBLY	09-11-06

DRAWN BY: mtrippe
DATE: 07-25-06
TITLE: HYDRAULIC SCHEMATIC
DRAWING NUMBER: 4011111
MODEL: TR10
SCALE: 1:4
MODEL NAME: NS TR10 2006
DRAWN: mtrippe 06-14-06
CHK'D: HH
APD: APD
SIZE: D
DRAWING NUMBER: 4011111
SHEET: 1 of 3

HTT
Harsco Track Technologies
Harsco
Columbia, SC

Plotted by mtrippe on 9-12-2006 4011111.dft

SECTION J-21

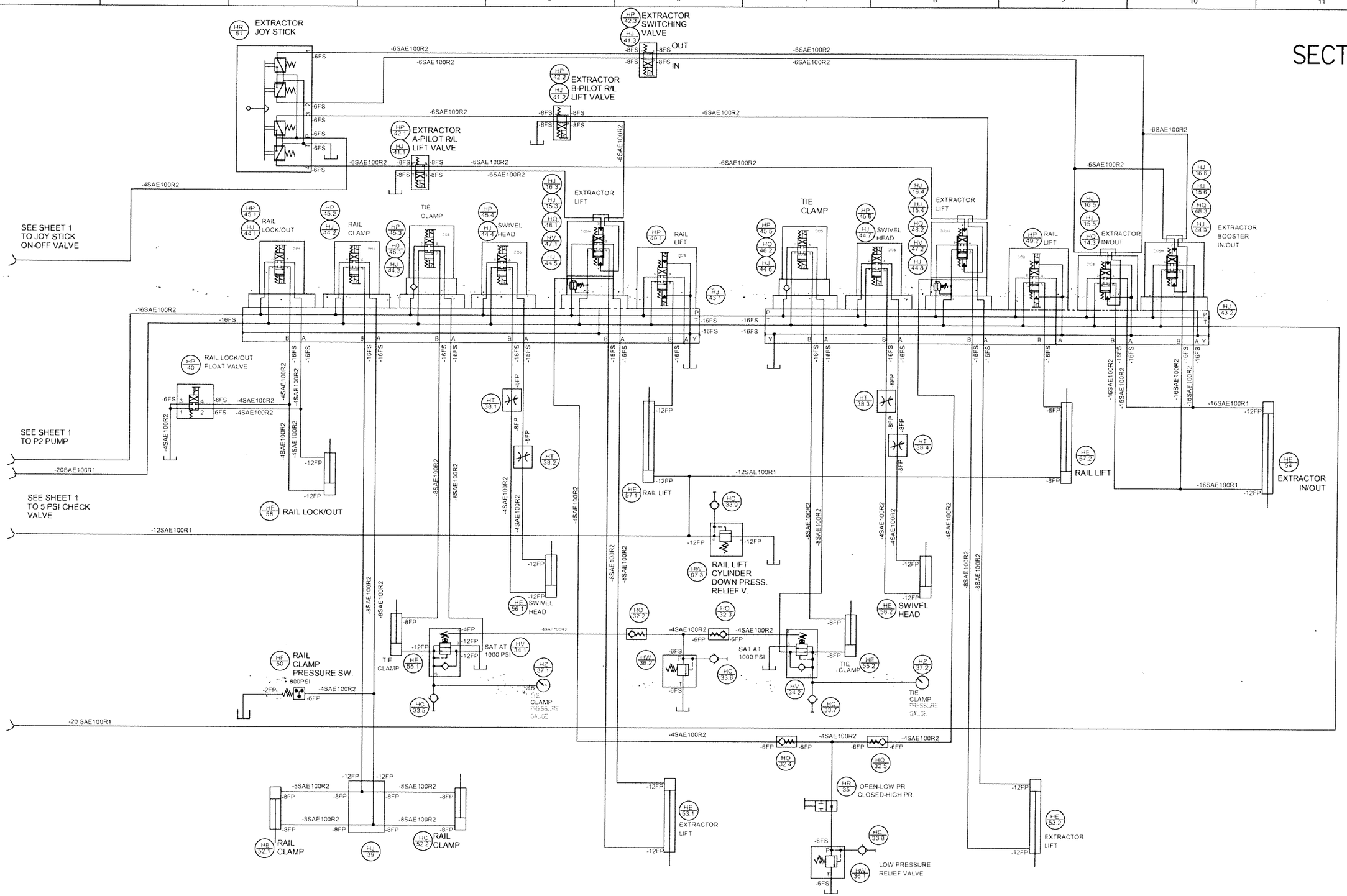

SOLID EDGE DRAWING

CONFIDENTIAL

© COPYRIGHT 2001 HARSCO TRACK TECHNOLOGIES. THIS DRAWING OR DOCUMENT IS THE PROPERTY OF HARSCO TRACK TECHNOLOGIES AND EMBODIES CONFIDENTIAL INFORMATION, TRADE SECRET INFORMATION, AND/OR KNOW-HOW THAT IS THE PROPERTY OF HARSCO TRACK TECHNOLOGIES. BY ACCEPTING THIS DRAWING OR DOCUMENT, THE RECIPIENT AGREES (1) NOT TO PROVIDE, OR OTHERWISE MAKE AVAILABLE THE DRAWING OR DOCUMENT, OR ANY INFORMATION OR KNOW-HOW EMBODIED THEREIN, TO ANY THIRD PARTY AND (2) NOT TO REPRODUCE OR USE THE DRAWING OR DOCUMENT TO MANUFACTURE ANY APPARATUS OR DEVICE WITHOUT THE PRIOR WRITTEN AUTHORIZATION OF HARSCO TRACK TECHNOLOGIES.

IMPLIED TOLERANCES

	INCH			METRIC		

CHANGE	R-L	REVISION	DATE
ECN 00298	A	RELEASE	07-25-05
ECN 00669	B	ADDED ITEMS 17 - 59	07-25-06
ECN-100757	C	UP-DATED SCHEMATIC TO FINAL ASSEMBLY	09-11-06

HYDRAULIC SCHEMATIC

4011111

TR10

NS TR10 2006

mtrippe 06-14-06

HH APD

1.4

4011111 D 2 of 3

HTT
Harsco Track Technologies
Harsco
Columbia, SC

Plotted by mtrippe on 9 12 2006 4011111.dft

CONFIDENTIAL
© COPYRIGHT 2001 HARSCO TRACK TECHNOLOGIES. THIS DRAWING OR DOCUMENT IS THE PROPERTY OF HARSCO TRACK TECHNOLOGIES AND EMBODIES CONFIDENTIAL INFORMATION, TRADE SECRET INFORMATION, AND/OR KNOW-HOW THAT IS THE PROPERTY OF HARSCO TRACK TECHNOLOGIES. BY ACCEPTING THIS DRAWING OR DOCUMENT, THE RECIPIENT AGREES (1) NOT TO PROVIDE, OR OTHERWISE MAKE AVAILABLE, THE DRAWING OR DOCUMENT, OR ANY INFORMATION OR KNOW-HOW EMBODIED THEREIN, TO ANY THIRD PARTY AND (2) NOT TO REPRODUCE OR USE THE DRAWING OR DOCUMENT TO MANUFACTURE ANY APPARATUS OR DEVICE, WITHOUT THE PRIOR WRITTEN AUTHORIZATION OF HARSCO TRACK TECHNOLOGIES.

SOLID EDGE DRAWING

SECTION J-23

ITEM NO.	NUMBER	DESCRIPTION	QTY
1	A0066017	1/2"-13 X 1 1/4" EYE BOLT	4
2	F001267	FLAT WASHER	4
3	F014487	1/2"-13 ESNA NUT	4
4	0-3010004-0-03	7/16" ANCHOR SHACKLE	4
5	4011751	BULKHEAD PLATE	2
6	4011752	BULKHEAD PLATE	1
7	4011545	TOOL BALANCER	4

IMPLIED TOLERANCES
ALL DIMENSIONS ARE IN INCHES - TOLERANCE UNLESS OTHERWISE SPECIFIED

NOMINAL SIZE RANGE		INCH PLUS OR MINUS		NOMINAL SIZE RANGE		METRIC PLUS OR MINUS	
OVER	TO	2 PLACE DECIMAL	3 PLACE DECIMAL	OVER	TO	1 PLACE DECIMAL	2 PLACE DECIMAL
0	6	.03	.005	0	150	.8	.13
6	24	.04	.008	150	600	1.0	.20
24	-	.06	.010	-	600	1.5	.25

UNLESS OTHERWISE SPECIFIED ALL MACHINED SURFACES WILL HAVE:
A SURFACE FINISH OF 125 MICROINCHES
ANGULAR TOLERANCE OF ± 50'
CONCENTRICITY WITHIN .010

THIRD ANGLE PROJECTION

UNLESS OTHERWISE SPECIFIED ALL WELDS SHOULD ADHERE TO THE LATEST HTT WELDING SPECIFICATION 101

CHANGE	R/L	REVISION	DATE
100549	A	RELEASE	5-18-06

Description: HOSE BOOM ACCESSORIES
Drawing Number: ----------
Machine Type: TRIO, NS
Model: N/A
Drawn: hhill
Date Drawn: 5-18-06
Weight: N/A
Scale:
APVD Desg: DES
APVD ChEng: APD
Mat'l: SEE ABOVE

HTT
Harsco Track Technologies
Harsco
Columbia, SC

Part Number: 4011850
Size: B
Sheet: 1 of 1

Plotted by hhill on 8/28/2006 4011850.dft

SECTION JO

HYDRAULIC COMPONENTS OPTIONS

EMERGENCY PUMP ASSY
DWG NO A6656WAC
SECTION JO-0900A
REV 5

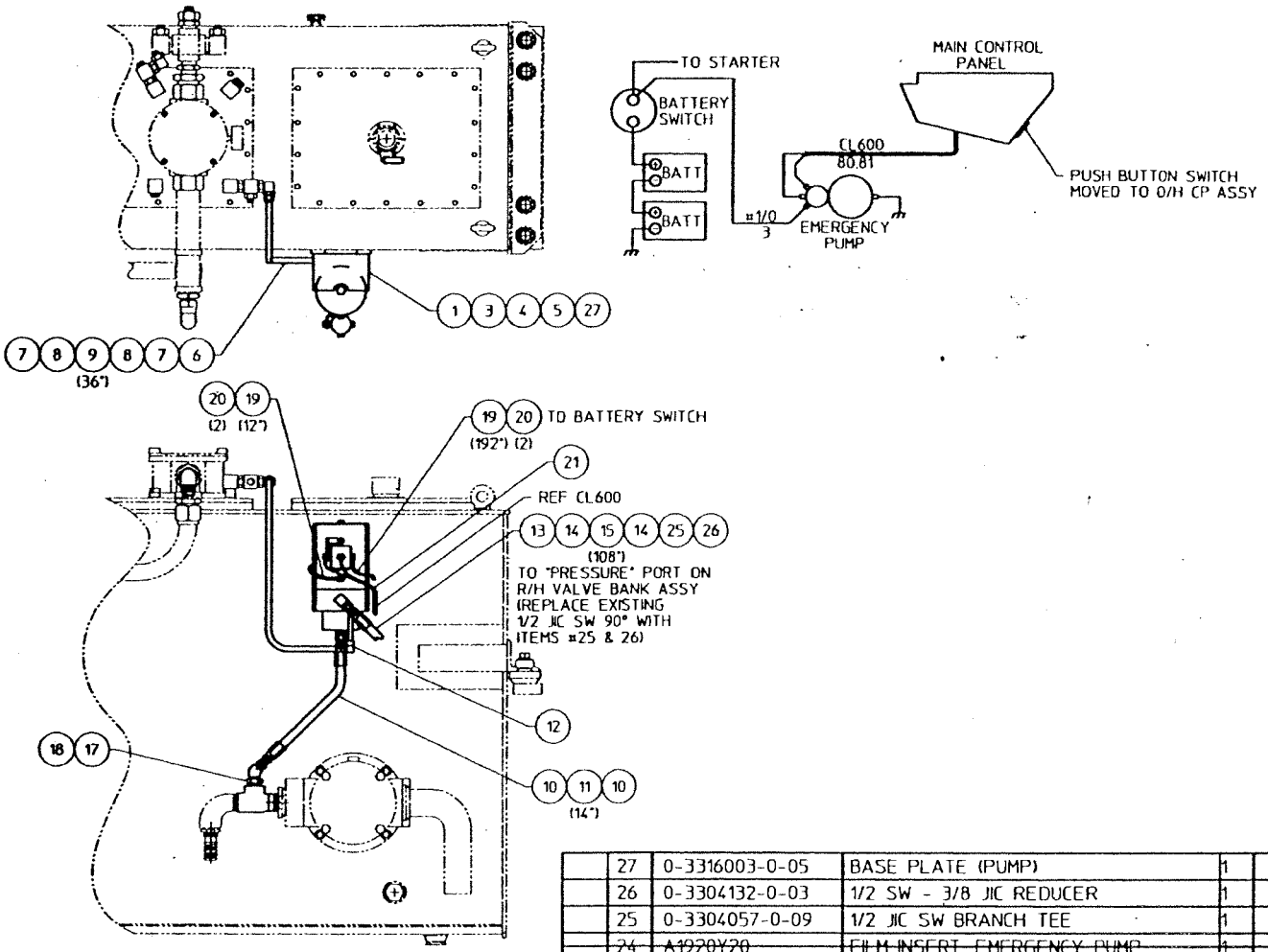

	27	0-3316003-0-05	BASE PLATE (PUMP)	1	
	26	0-3304132-0-03	1/2 SW - 3/8 JIC REDUCER	1	
	25	0-3304057-0-09	1/2 JIC SW BRANCH TEE	1	
	~~24~~	~~A1920Y20~~	~~FILM INSERT, EMERGENCY PUMP~~	~~1~~	
	~~23~~	~~A0653Y01~~	~~CONTACT BLOCK NO-NO~~	~~1~~	
	~~22~~	~~A0655Y01~~	~~PUSH BUTTON SWITCH, MOM~~	~~1~~	
	21	L422501	TERMINAL EYE	4	
	20	L422508	TERMINAL EYE	4	
	19	L411078	#1/0 CABLE (FT)	23	
	18	L424417	3/4 MP - 1/2 JIC 45°	1	
	17	L420104	1 1/4 MP - 3/4 FP REDUCER	1	
	~~16~~	~~0-3304112-0-08~~	~~1 1/4 MP-FP-FP TEE~~	~~1~~	
	15	L411007	3/8 HP HOSE (FT)	9	
	14	L411363	3/8 HP SW JIC HOSE END	2	
	13	L420003	3/8 MP-JIC 90°	1	
	12	0-3304100-0-10	1/8 FP - 3/8 JIC 90°	1	
	11	L423105	1/2 MP HOSE (FT)	1.17	
	10	L411361	1/2 MP SW JIC HOSE END	2	
	9	0-3305018-0-02	3/8 Ø HYD TUBING (FT)	3	
	8	0-3304120-0-05	TUBE NUT	2	
	7	0-3304121-0-05	SLEEVE	2	
	6	0-3304132-0-03	1/2 JIC SW - 3/8 JIC	1	
	5	A0055036	3/8-16 HEX NUT, PLATED	4	
	4	A0059044	3/8 FLAT WASHER, PLATED	4	
	3	A0061053	3/8 LOCK WASHER, MEDIUM PLATED	4	
	1	0-3316003-0-04	EMERGENCY PUMP (24V)	1	
	ITEM	PART NUMBER	DESCRIPTION	QTY	

ENG DWG NO. A7757

REVISIONS							
NO	ER	DESCRIPTION	ZONE	DR	CK	APP	MF
1	5993.2	NEW RELEASE					
2	5943.2	DIM. 3 INCHES WAS 4½ ADDED NOTE: (BEND HANDLE)	A2	HH		9-25-92	
C	13050.2	ADDED ITEM 10. 1-9-04		HH			

SECTION JO-0903

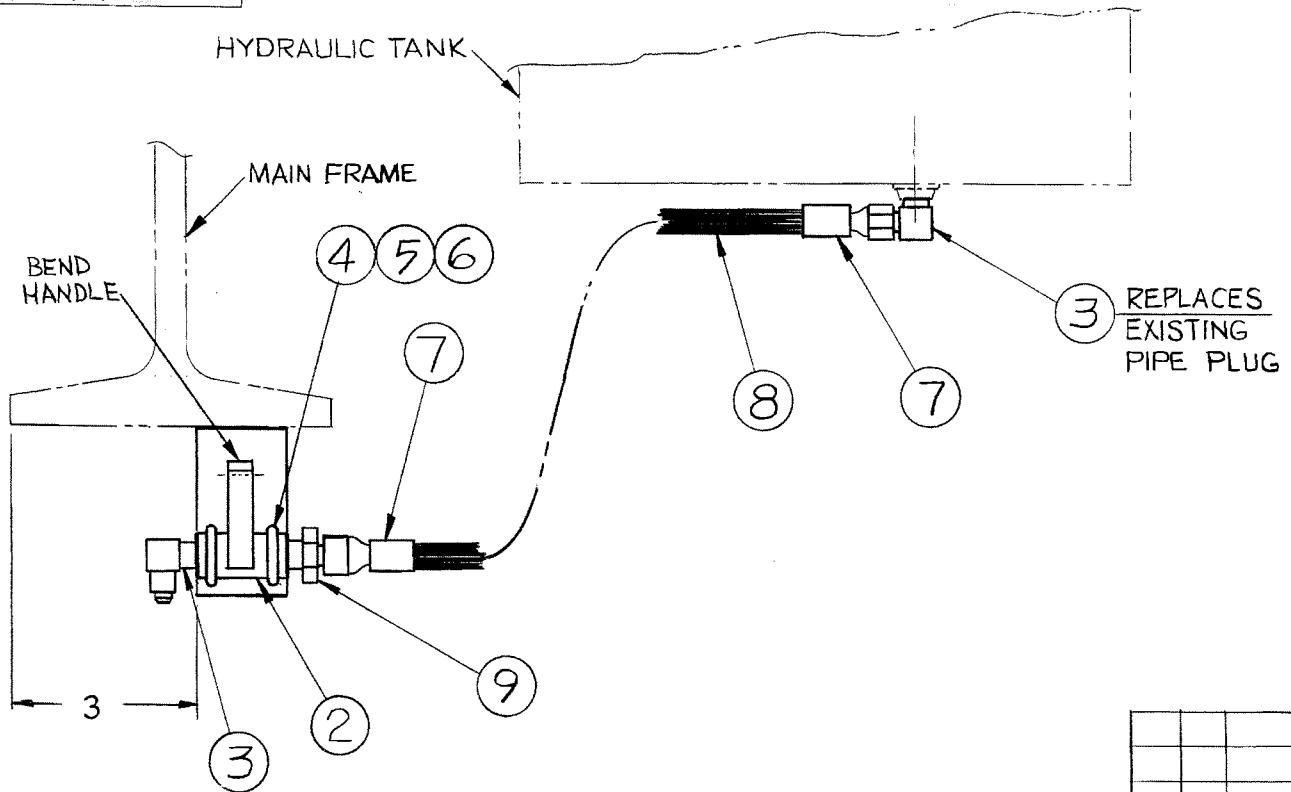

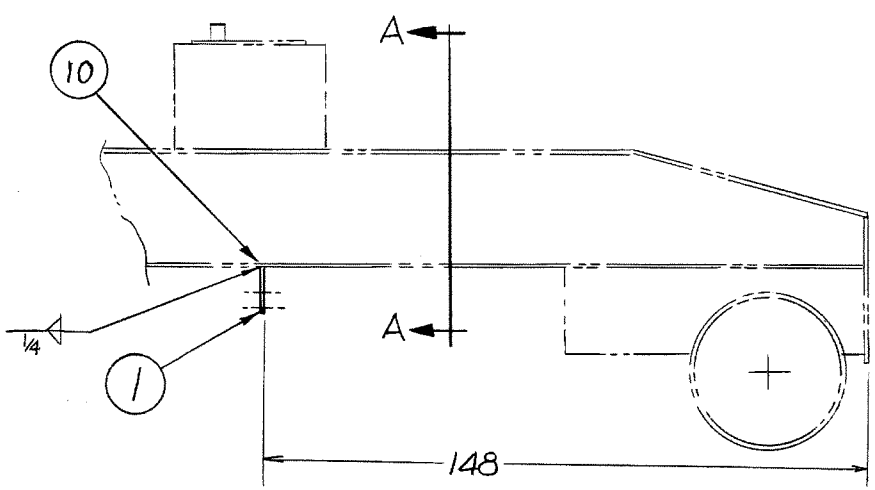

FIG NO.	ITEM NO.	PART NUMBER	DESCRIPTION AND MATERIAL SIZE (REF ONLY)	QTY
	10	D2646Y06	STEN. HYD OIL TANK DRAIN	1
	9	L411382	¾ MP-JIC STR	1
	8	L411009	¾ HOSE (1@5FT)	5
	7	L411358	¾ HOSE END, JIC SW	2
	6	L40387	⅜-16 LOCK NUT	4
	5	A0059033	⅜ FLAT WASHER	4
	4	0-3012009-0-01	"U" BOLT	2
	3	L420006	¾ MP-JIC 90°	2
	2	0-3330011-0-05	¾ BALL VALVE	1
	1	A5578Y01	PLATE, DRAIN VALVE	1

IMPLIED TOLERANCES
ALL DIMENSIONS ARE IN INCHES TOLERANCE UNLESS OTHERWISE SPECIFIED

NOMINAL SIZE RANGE		PLUS OR MINUS			NOMINAL SIZE RANGE		PLUS OR MINUS		
OVER	TO	FRACTION	2 PLACE DECIMAL	3 PLACE DECIMAL	OVER	TO	FRACTION	2 PLACE DECIMAL	3 PLACE DECIMAL
-	1	1/64	.02	.005	6	24	1/32	.03	.005
1	6	1/32	.02	.005	24		1/16	.03	.010

ANGULAR DIMENSIONS PLUS OR MINUS 1 DEGREE

ALL MACHINED SURFACES TO HAVE A SURFACE FINISH OF 125 MICROINCHES UNLESS OTHERWISE SPECIFIED

WEIGHT lbs.

3rd ANGLE PROJECTION

DO NOT SCALE

LAST ITEM NO. USED 10

DESCRIPTION (30): LOCKABLE HYD DRAIN KIT

DRAWN: J.C. Woodall DATE: NOV. 7-85

CHECKED: DATE: 6-23-92

APP-ENG: DATE: JUN 15 23-92

APP-MFG: DATE:

MACHINE TYPE: TR1 (PHASE III)

Tamper

Division Cannon Corp
2401 Edmond Road–Box 20
Cayce–West Columbia
S. C. 29171-0020
(803) 794-9160

SHEET 1 CONT. ON

ENG. DWG. NO. A7757X

THIS DOCUMENT CONTAINS PROPRIETARY INFORMATION AND SUCH INFORMATION MAY NOT BE DISCLOSED TO OTHERS FOR ANY PURPOSE OR USED FOR MANUFACTURING PURPOSES WITHOUT THE WRITTEN PERMISSION OF TAMPER.

ENGS-31

american blueprint of columbia

ENG.DWG.NO. D3817 A

REVISIONS						
NO	ER	DESCRIPTION	DR	CK	APP	MF
1	7014.8	NEW RELEASE	AFG	DGV	JOC	
2	6864.55	DELETED ITEMS 3-5. P/N'S WERE D3783X01,A0036002 AND A0061008 RESPT. ITEM 2 WAS P/N D3784Y02.	AFG	DGV	AML	
3	10297.1	IT-1 WAS D2792W01. ADDED ITS-3 THRU 6. 8/14/97	JBR	DGV	AML	
4	12429	IT-2 WAS D4353X01 10/25/2001	JBR	DGV	AML	

SECTION JO-0908

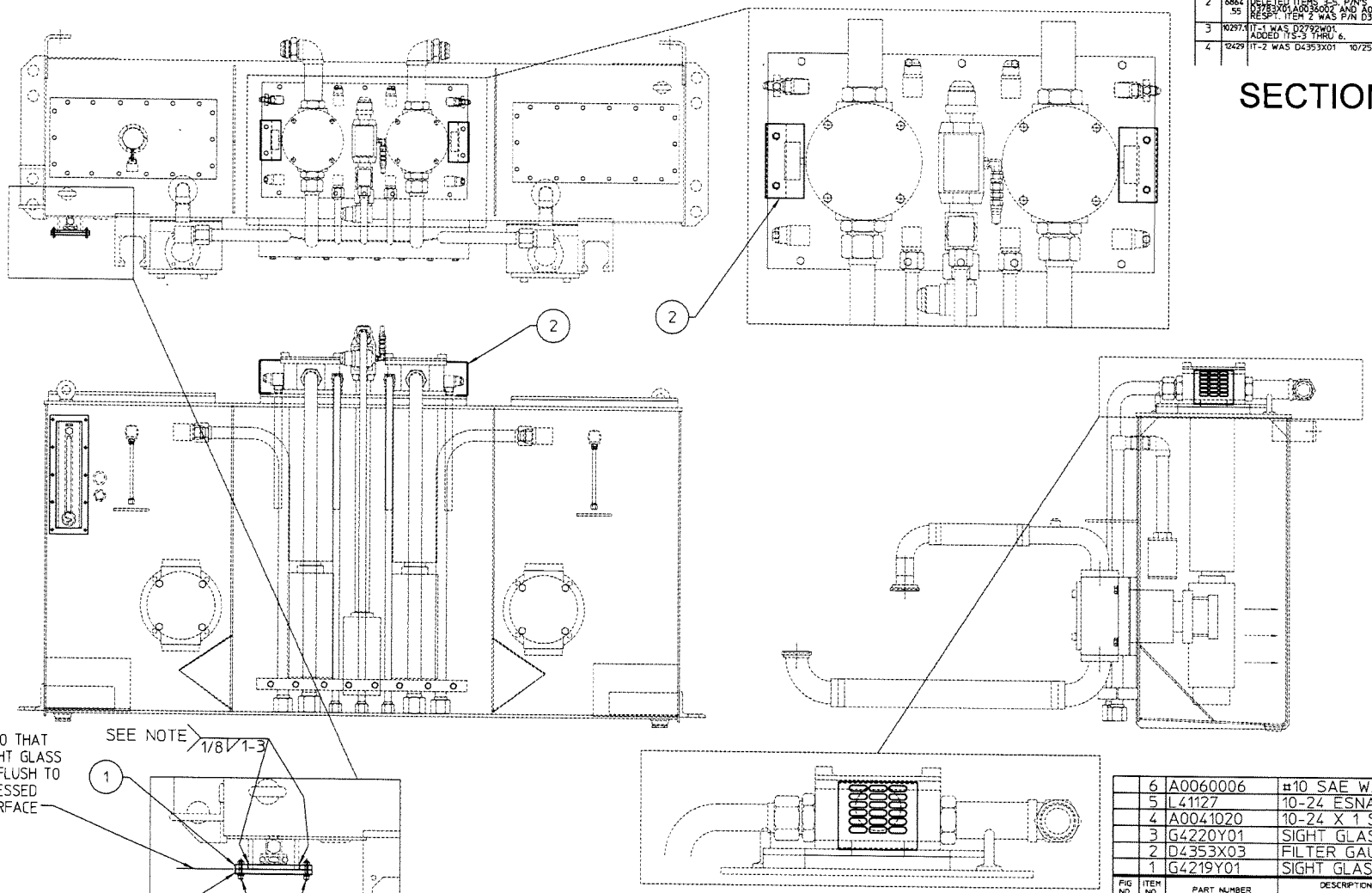

NOTE:
LOCATE IT-1 SO THAT EDGES OF SIGHT GLASS GUARDS ARE FLUSH TO SLIGHTLY RECESSED FROM THIS SURFACE OF IT-1

FIG NO.	ITEM NO.	PART NUMBER	DESCRIPTION AND MATERIAL SIZE (REF.ONLY)	QTY
	6	A0060006	#10 SAE WASHER	10
	5	L41127	10-24 ESNA NUT	10
	4	A0041020	10-24 X 1 SOC HD CS	10
	3	G4220Y01	SIGHT GLASS COVER	1
	2	D4353X03	FILTER GAUGE GUARD	2
	1	G4219Y01	SIGHT GLASS COVER FRAME	1

IMPLIED TOLERANCES
ALL DIMENSIONS ARE IN INCHES-TOLERANCE UNLESS OTHERWISE SPECIFIED

NOMINAL SIZE RANGE		PLUS OR MINUS			NOMINAL SIZE RANGE		PLUS OR MINUS		
OVER	TO	FRACTION	2 PLACE DECIMAL	3 PLACE DECIMAL	OVER	TO	FRACTION	2 PLACE DECIMAL	3 PLACE DECIMAL
-	1	1/64	.01	.003	6	24	3/64	.03	.006
1	6	1/32	.02	.005	24	-	1/16	.05	.010

ANGULAR DIMENSIONS PLUS OR MINUS 1 DEGREE
ALL MACHINED SURFACES TO HAVE A SURFACE FINISH OF 125 MICROINCHES UNLESS OTHERWISE SPECIFIED.

WELDING SPECIFICATION
UNLESS OTHERWISE SPECIFIED ALL WELDS SHOULD ADHERE TO FAIRMONT TAMPER WELDING SPECIFICATION NO. 101

WEIGHT
DO NOT SCALE
3rd ANGLE PROJECTION
SHEET 1 OF 1

DESCRIPTION OF HYD TANK GAUGE COVERS
MACHINE TYPE MARK IV

DRAWN AL GUNN	DATE 7-11-94	
CHECKED DGV	DATE 7-13-94	
APP-ENG JOC	DATE 7-13-94	
APP-MFG	DATE	
LAST EDN. 12429 .24	CHECKED DWG DATE 31-Oct-01	

Fairmont Tamper
3401 Edmund Road-Box 30
Cayce-West Columbia, South Carolina 29171-0030
(803) 822-3960

ENGDWGNO. D3817WAA

PLOT @ 6

THIS DOCUMENT CONTAINS PROPRIETARY INFORMATION AND SUCH INFORMATION MAY NOT BE DISCLOSED TO OTHERS FOR ANY PURPOSE OR USED FOR MANUFACTURING PURPOSES WITHOUT THE WRITTEN PERMISSION OF FAIRMONT TAMPER.

ENG. DWG. NO.
A7830W

NO	ER	DESCRIPTION	DNE	DR	CK	APP	MF
1	5/29/87	NEW RELEASE					
2	9/15/87	ADDED IT. 27. RELOCATED IT.	C-3	KK			
3	10/28/87	ADDED IT 28 AND NOTE 3	A-2	KED			
4	4/28/88	REPLACED LG DIM, ADDED DIMS. 7, 14, 16, AND IT. 29	C-1 B-1	KED			
5	8/22/88	ITEM 16 WAS L411382 ADDED NOTE 6	B-3	SPB			
6	8/16/89	DELETED NOTES 3 & 4 & IT. 28. ADDED NOTE 5 & ITEMS 30-32. IT. 21 WAS L420443	E1, PL E2, PL PL	HHW			
7	10/30/89	ITEM 16 WAS 03304087-0-03	P/L	TAF			
8	11/28/89	129 WAS 128, REMOVED 120 DIM PLUG DIM WAS 7", ADDED NOTE 7	B1 C2	VJV			

SECTION JO-0910A

NOT

1) REMOVE BUNG ADAPTER AND DISCARD.
2) REMOVE FOUR 1/4-20 BOLTS FROM COVER AND REPLACE WITH ITEM#8 FOR PUMP MOUNTING.
3) ~~REMOVE AND RETURN TO STORES:~~

A2435Y01	TANK COVER	1 EA
0-3381000-0-01	FILLER CAP	1 EA
A7437Y01	LOCKING PLATE	1 EA
A7436Y01	BRACKET	2 EA.

4) ~~IF EMERGENCY PUMP IS USED INSTALL A SERVICE TEE (L40043) TO TANK & ADD ITEM 21 TO RUN OF TEE. PLUMB EMERG. PUMP TO BRANCH OF TEE.~~
5) REMOVE AND RETURN TO STORES:
   0-3381010-0-11 FILLER CAP 1-EA.
   L425144 MASTER PADLOCK 1-EA.
6) IF MACHINE HAS HI-PRESS FILTER OPTION. WAIT UNTIL HARD LINES ARE RUN BEFORE LOCATING IT. 25 & 27 AS REQUIRED.
7) REMOVE & RETURN TO STORES
   B5539Y02 FILLER COVER PLATE
   0-3381010-0-05 GASKET

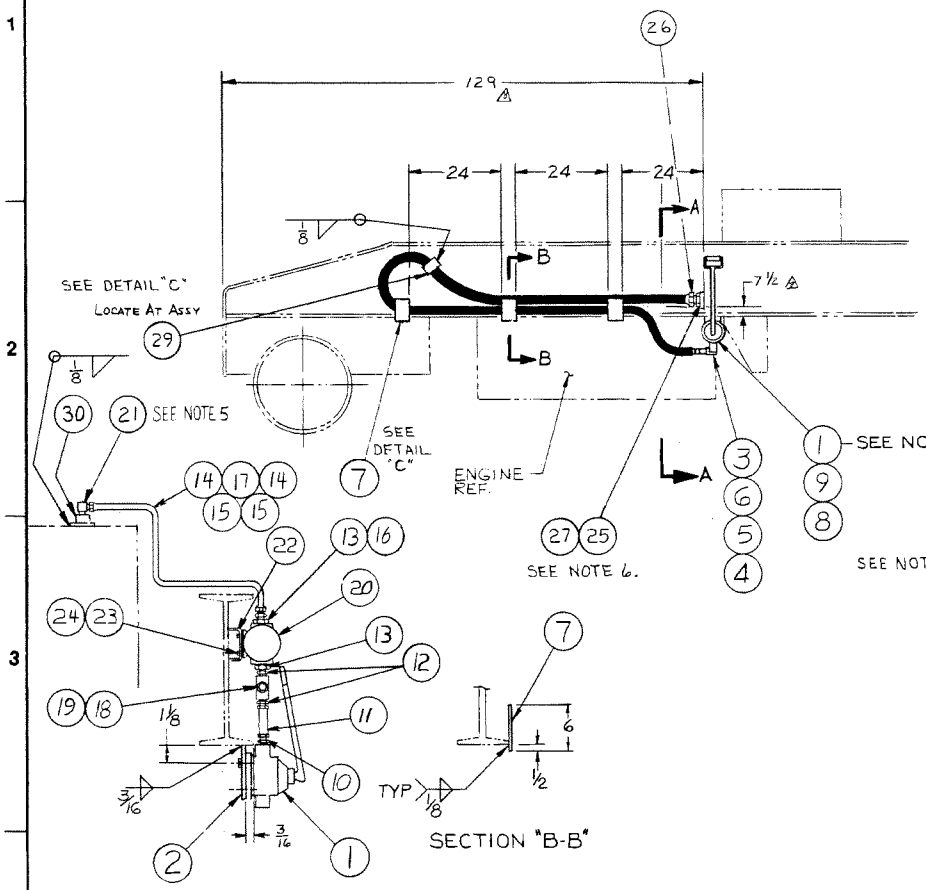

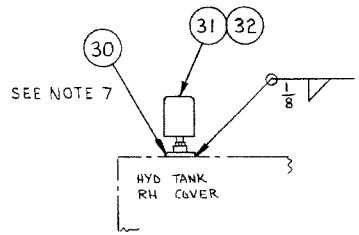

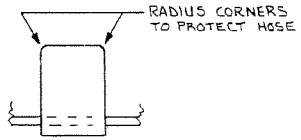

DETAIL "C"
ITEMS 7 & 29
SEE B2 & A2

32	A1554Y01	RESERVOIR BREATHER	1	
31	L411395	1"-MP / 3/4 FP RED.	1	
30	D5641YAA	COVER WLDT.	2	
29	0-1304289-0-01	ANGLE	1	
~~28~~	~~A2435Y02~~	~~TANK COVER~~	~~1~~	
27	L420350	1" PLUG	1	
26	D0947Y03	HOSE END, 1" JIC, SW.	1	
25	TY753789-321	BAR 1/4 x 2 x 3	1	
24	A0061010	3/8 LOCK WASHER	2	
23	A0036062	3/8-16 x 7/8 HEX.HD. CPSCR	2	
22	B6586X01	FILTER BRACKET	1	
21	L420007	1"-MP / 3/4 JIC 90°	1	
20	0-3352002-0-06	FILTER	1	
19	L40672	1" PLUG	1	
18	L410422	1" TEE	1	
17	0-3305018-0-05	3/4 HARDLINE (FT)	4	
16	L420006	3/4 MP-JIC 90°	1	
15	0-3304121-0-08	3/4 SLEEVE	2	
14	0-3304120-0-08	3/4 NUT	2	
13	L41383	BUSHING 1 1/2-3/4	2	
12	L420967	1" MP-3/4 MP REDUCER	2	
11	L41600	CHECK VALVE	1	
10	L40306	3/4 MP ADAPTER	1	
9	A0061008	1/4 LOCKWASHER	4	
8	A0036005	1/4-20 x 1" LG, HEX HD CAP SCR	4	
7	A3070T83	PLATE (1/4 x 4 x 6)	3	
6	0-3304174-0-03	1" KING NIPPLE	1	
5	0-3304171-0-02	BAND CLAMP	2	
4	0-3305012-0-02	1" HOSE (1PC @ 15 FT)	15	
3	L40076	1" MP-FP 90° FITTING	1	
2	A3063Y01	MOUNTING PLATE	1	
1	0-3316005-0-01	PISTON TYPE HAND PUMP	1	

FIG NO.	ITEM NO.	PART NUMBER	DESCRIPTION AND MATERIAL SIZE (REF ONLY)	AA QTY

IMPLIED TOLERANCES
ALL DIMENSIONS ARE IN INCHES – TOLERANCES UNLESS OTHERWISE SPECIFIED

NOMINAL SIZE RANGE OVER	TO	FRACTION	PLUS OR MINUS 2 PLACE DECIMAL	PLUS OR MINUS 3 PLACE DECIMAL	NOMINAL SIZE RANGE OVER	TO	FRACTION	PLUS OR MINUS 2 PLACE DECIMAL	PLUS OR MINUS 3 PLACE DECIMAL
—	1	1/64	.01	.003	6	24	1/64	.03	.008
1	6	1/32	.02	.005	24	—	1/16	.05	.010

ANGULAR DIMENSIONS PLUS OR MINUS 1 DEGREE
ALL MACHINED SURFACES TO HAVE A SURFACE FINISH OF 125 MICROINCHES UNLESS OTHERWISE SPECIFIED

DO NOT SCALE

WEIGHT lbs.

3rd ANGLE PROJECTION

LAST ITEM NO. USED

DESCRIPTION (OR)
TOP-UP PUMP KIT

		DATE
DRAWN		2-15-89
CHECKED		2-22-89
APP-ENG		
APP-MFG		

MACHINE TYPE TR1 PHASE III

Tamper
Division Carlisle Corp
3401 Fairmont Road-Box 26
Cayce-West Columbia, S.C. 29171-0026
(803) 796-9160

SHEET 1 OF 1

ENG. DWG. NO. A7830W

THIS DOCUMENT CONTAINS PROPRIETARY INFORMATION AND SUCH INFORMATION MAY NOT BE DISCLOSED TO OTHERS FOR ANY PURPOSE OR USED FOR MANUFACTURING PURPOSES WITHOUT THE WRITTEN PERMISSION OF TAMPER.

ENGS-32

ge-american blueprint of columbia

ENG.DWG.NO.
D6054YAA

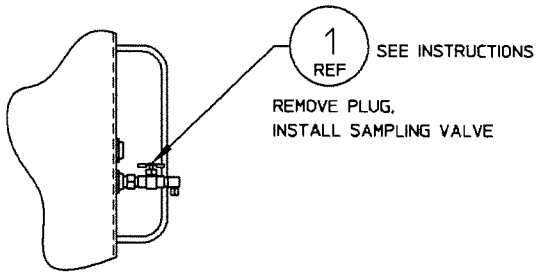

DETAIL-A

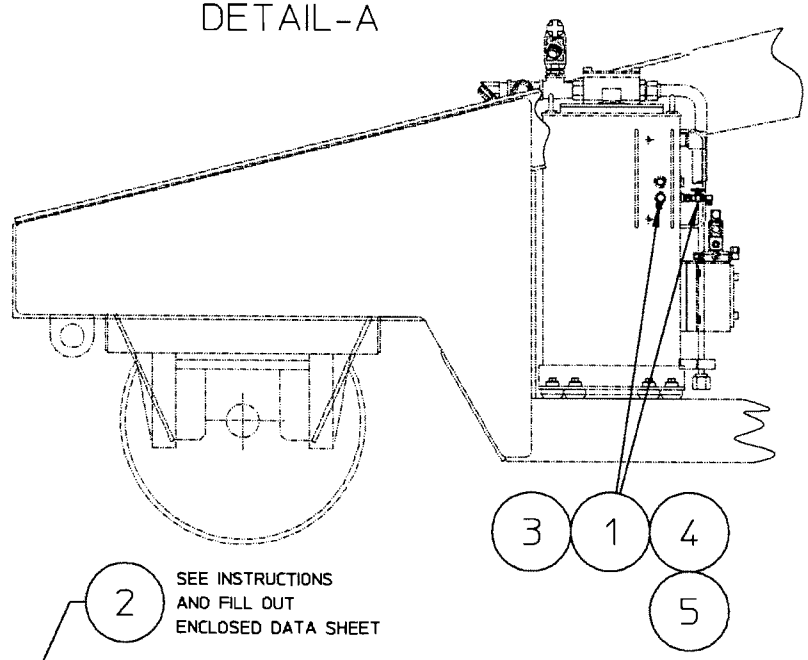

ALTERNATE VALVE LOCATIONS
SEE DETAIL-A

REVISIONS							
NO	ER	DESCRIPTION	ZONE	DR	CK	APP	MF
1	7439.1	RELEASED		MLT	JGA	LES	
2	7439.6	ADDED ITEM-3		LES	JGA		
3		IT-1 WAS D6052Y01 "SAMPLING VALVE" IT-3 WAS L420105 "3/8 X 1/4 BUSHING" IT-4 - 6 ADDED, REVISED INSTRUCTION		LES		WHC	

INSTRUCTIONS FOR TAKING THE OIL SAMPLE. **SECTION JO-0913**

BEFORE YOU BEGIN, READ THE INSTRUCTIONS IN SAMPLING KIT (ITEM-2). REMOVE METAL DUSTCOVER ON DISCHARGE PORT OF SAMPLING VALVE (ITEM-1). DISCHARGE APPROXIMATELY 16 OZ. OF OIL TO FLUSH VALVE, DO THIS BY TURNING WING KNOB TO THE ON POSITION. DISPOSE OF THIS WASTE IN AN APPROPRIATE MANNER. LOCATE CLEAN OIL SAMPLING BOTTLE FROM FLUID SAMPLING KIT, REMOVE LID FROM BOTTLE TAKING CARE NOT TO INTRODUCE ANY FOREIGN MATERIAL ONTO LID OR INTO BOTTLE, SUGGEST PUTTING LID BACK INTO PLASTIC ZIP-LOK BAG, THEN HOLD BOTTLE UNDER DISCHARGE PORT. TURN WINGED KNOB TO DESIRED FLOW RATE AND FILL BOTTLE TO THE PROPER LEVEL. THE KNOB CAN BE ADJUSTED TO THROTTLE THE RATE OF FLOW. WHEN BOTTLE IS NEAR FULL BEGIN CLOSING OFF THE WINGED KNOB REPLACE LID ON SAMPLING BOTTLE IMMEDIATELY REPLACE THE METAL DUSTCOVER ON SAMPLING VALVE - WRENCH TIGHT.

FIG NO.	ITEM NO.	PART NUMBER	DESCRIPTION AND MATERIAL SIZE (REF.ONLY)	QTY
	6	D6054YAA	KIT INSTALLATION (DRAWING ONLY)	REF
	5	L420351	1/4 JIC CAP	1
	4	L420002	1/4 NPT X 1/4 JIC X 90° ELBOW	1
	3	L425403	3/8 X 1/4 NIPPLE	1
	2	D6053Y01	FLUID SAMPLING KIT	1
	1	0-3410002-0-01	NEEDLE VALVE	1

IMPLIED TOLERANCES
ALL DIMENSIONS ARE IN INCHES-TOLERANCE UNLESS OTHERWISE SPECIFIED

NOMINAL SIZE RANGE		PLUS OR MINUS			NOMINAL SIZE RANGE		PLUS OR MINUS		
OVER	TO	FRACTION	2 PLACE DECIMAL	3 PLACE DECIMAL	OVER	TO	FRACTION	2 PLACE DECIMAL	3 PLACE DECIMAL
-	1	1/64	.01	.003	6	24	3/64	.03	.005
1	6	1/32	.02	.005	24	-	1/16	.05	.010

ANGULAR DIMENSIONS PLUS OR MINUS 1 DEGREE
ALL MACHINED SURFACES TO HAVE A SURFACE FINISH OF 125 MICROINCHES UNLESS OTHERWISE SPECIFIED.

WEIGHT lbs.

3rd ANGLE PROJECTION

DO NOT SCALE

WELDING SPECIFICATION
UNLESS OTHERWISE SPECIFIED ALL WELDS SHOULD ADHERE TO FAIRMONT TAMPER WELDING SPECIFICATION 101

DESCRIPTION (24)
FLUID SAMPLING KIT INSTL

DRAWN M TRIPPE	DATE 3/13/95	MACHINE TYPE MARK IV	
CHECKED JGA	DATE 3/16/95		
APP-ENG LES	DATE 3/16/95		
SHEET 1	CONT. — ON		
LAST ECR. 7694. 1	CHECKED dvgn	ENG.DWG.NO. D6054YAA	
	DATE 27-Jul-95		

Fairmont Tamper™
2401 Edmund Road-Box 20
Cayce-West Columbia,
South Carolina 29171-0020
(803) 822-9160

Section K

Pneumatic Components

AIR COMPONENTS & HOSES

SECTION K-1A **DWG NO. A6638VAC**

ITEM	DESCRIPTION	PART NUMBER	QTY
1	GOVERNOR	L423613	1
2	HYD. LINE CLAMP 2" SERIES	0-3305021-0-02	2
3	RESERVOIR BRACKET	L423623	2
5	QUICK RELEASE VALVE	L424323	2
6	QUICK RELEASE HOLDING VALVE	L424334	2
7	SHUTTLE VALVE	0-3410004-0-04	1
8	SOL VALVE 3 WAY	0-3412004-0-02	1
9	CHECK VALVE	L425194	1
10	VALVE	L424114	2
11	VALVE	L424113	2
12	AIR LINE REGULATOR	0-3434000-0-02	1
13	1/2 TEFLON HOSE ASS'Y	0-3303025-0-02	1
14	1/2 COPPER TUBING	L424324	4.5
15	NUT	0-3304120-0-06	2
16	SLEEVE	0-3304121-0-06	2
17	HYD. LINE CLAMP 2" SERIES	0-3305021-0-01	2
18	JUNCTION ADAPTER	0-3305022-0-19	4
19	JUNCTION ADAPTER	0-3305022-0-14	2
21	1/4-20 X 1 WELD STUD	A0071065	15
22	NIPPLE PIPE	L40061	1
25	TEE SERVICE	L40043	1
26	JIC/MP	L423271	4
27	PIPE, JIC/MALE	L411385	20
28	FITTING	L411379	1
29	FITTING	L411380	1
30	PIPE, JIC/MALE ADAPTOR	L411375	2
31	90DEG. MALE PIPE	L420853	19
32	90 DEG. JIC MALE PIPE	L420002	5
33	JIC MALE PIPE	L423157	2
34	90 DEG. JIC MP ADAPTOR	L420717	2
35	PIPE, JIC/MALE 90 DEG.	L420004	4
37	FITTING	L423251	3
38	NUT ELASTIC STOP	L40237	15
39	90 DEG. BULKHEAD ADAPTOR	L421705	4
40	1/8 NPT BREATHER	0-3350005-0-01	2
41	BREATHER VENTS	0-3350005-0-04	1
42	1/4-20X3/4 HHCAPSCREW	A0036003	8
43	1/4-20 X 1 3/4 HHCAPSCR	A0036008	3
44	1/4 MED LOK WSHR	A0061008	11
45	1/4-20 HEX NUTS	A0055009	11
46	5/16-18 X 3/4 CAPSCREW	A0036032	18
47	5/16-18 X 3 CAPSCREW	A0036042	2
48	5/16 MED LOK WSHR	A0061009	20
49	3/8-16 X 1 1/2 CAPSCREW	A0036066	8
50	3/8 MED LOK WSHR	A0061010	8
51	3/8-16 HEX NUTS	A0055012	8

AIR COMPONENTS & HOSES

SECTION K-1A **DWG NO. A6638VAC**

ITEM	DESCRIPTION	PART NUMBER	QTY
52	HOSE CLAMP 5/8 ID	L425624	15
53	AIR TANK ASSEMBLY (SEE K-2)	0-2400248-0-02	1
57	TEE	L420697	4
93	SWIVEL JIC/90/JIC FITTING	0-3304148-0-03	6
98	1/2" BULKHEAD 90	L420356	1
101	ELBOW BILKHEAD	L421702	1
108	1/4 MP HOSE	L423104	400
109	3/8 MP HOSE	L420207	15
110	1/2 MP HOSE	L423105	50
111	SWIVEL, JIC	L411366	85
112	FITTING	L411364	6
113	1/2" MP SWIVEL	L411361	12
114	SAFETY VALVE FRM F019025	L422515	1
115	1/4 MP-JIC LONG 90 DEG	L423300	1
116	STREET ELBOW	L420851	3
118	JIC-MALE PIPE	L423156	0
119	REDUCER PIPE	L40361	1
120	TEE SERVICE	L40056	1
121	ADAPTOR, 45 DEG.	L411532	1
122	PIPE REDUCER	L411401	1
123	FTG 1/8 MP-1/4 JIC 90 DEG	0-3304099-0-55	4
127	STACKING NUT	0-3305022-0-21	4
130	WELD ADAPTER	0-3305022-0-20	4
131	AIR VALVE	L425436	2
132	37/FLARE TUBE 90 DEG SW	0-3304057-0-07	2
133	PIPE JIC/MALE 45 DEG.	L411531	2
134	AIR DRYER KIT (SEE KO-0905)	C9785X01	1
135	BRACKET	A4471T02	2

AIR COMPONENTS AND HOSES
DWG NO A6638VAC
SECTION K-1A
REV 14
SHEET 1 OF 2

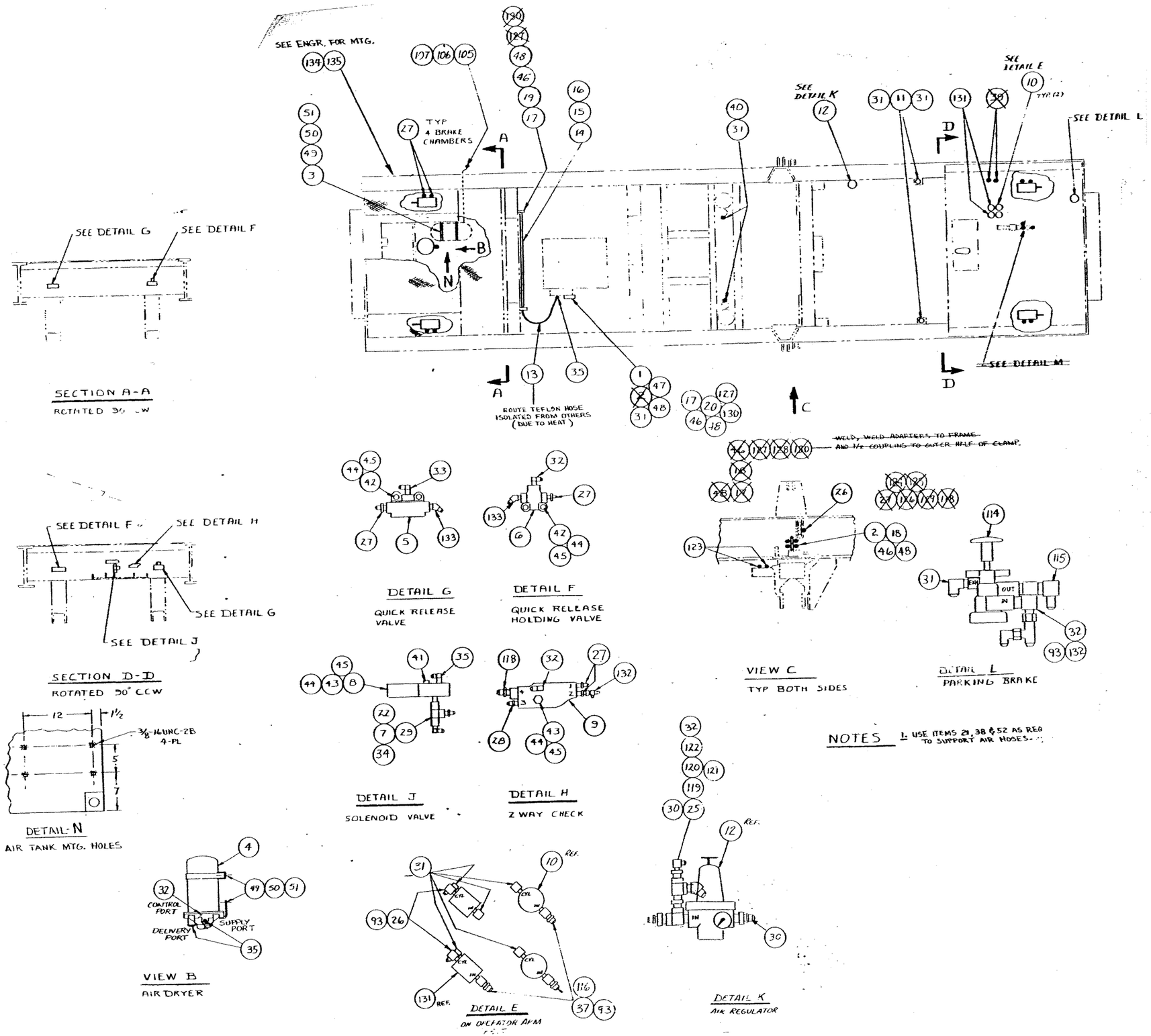

FIGURE 1

NOTES 1. USE ITEMS 21, 38 & 52 AS REQ TO SUPPORT AIR HOSES.

AIR COMPONENTS AND HOSES
DWG NO A6638VAC
SECTION K-1A
REV 14
SHEET 2 OF 2

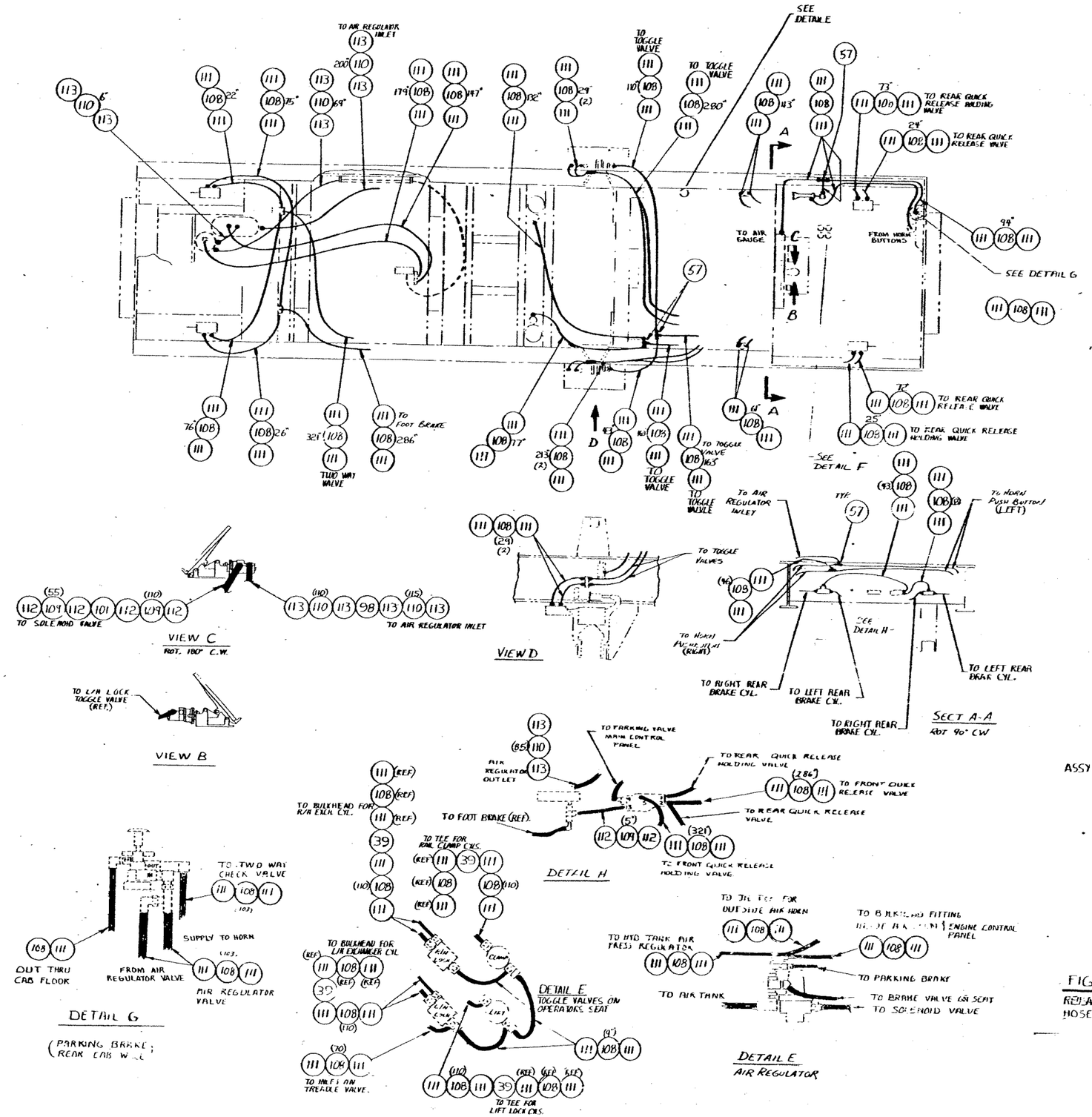

ASSY A6638VAB

FIGURE 4
REUSABLE HOSE END HOSE ASSY

AIR TANK ASSY
DWG NO 0-2400248-0-02
SECTION K-2

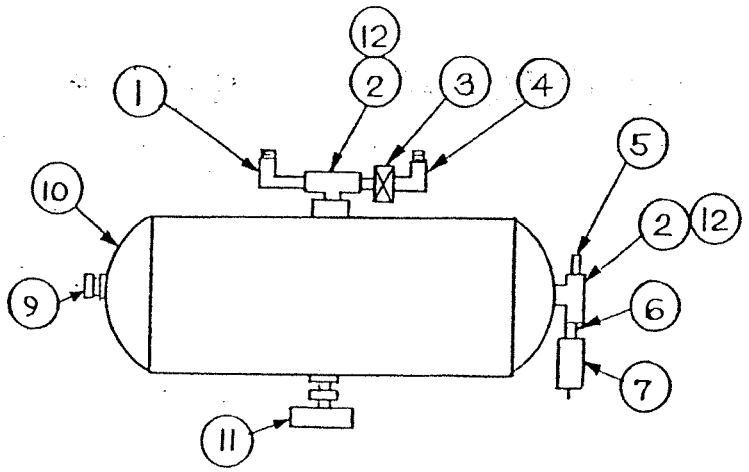

ITEM NO	PART NO	DESCRIPTION	QTY
12	L40361	3/4 X 1/2 NPT BUSHING	2
11	A3280Y01	DRAIN	1
10	0-3404000-0-04	AIR RESERVOIR	1
9	L420111	3/4 NPT PIPE PLUG	1
7	L423617	SAFETY VALVE	1
6	L411401	1/2 X 1/4 BUSHING	1
5	L411376	1/2 MP-JIC STR	1
4	L420004	1/2 MP/JIC 90 DEG	1
3	L423616	CHECK VALVE	1
2	L420100	1/2 FP/MP TEE	2
1	L423157	1/2-1/4 JIC/MP 90 DEG	1

PARTS LIST

ASSEMBLY IDENTIFIER: 02

FIG	ITEM NO	PART NUMBER	DESCRIPTION (29)		QUANTITY
	1	G3489Y03	AIR COMPRESSOR	PK	✓
	2	L423613	GOVERNOR	PV	✓
	3	0-3436001-0-09	AIR DRYER (24VDC)	PD	✓
	4	L423616	CHECK VALVE	PO	✓
	5	0-3404000-0-04	AIR RESERVOIR	PM	✓
	6	L423617	SAFETY RELIEF VALVE	PW	✓
	7	A3280Y01	MANUAL DRAIN VALVE	PT	✓
	8	0-3434000-0-02	AIR REGULATOR	PV	✓
	9	L424113	P/B AIR VALVE	PR	✓
	10	Z7803092	AIR HORN	PZ	✓
	11	B6092Y01	BRAKE VALVE (TREADLE)	PR	✓
	12	0-3410004-0-04	SHUTTLE VALVE	PO	✓
	13	0-3412004-0-02	VERSA SOL. VALVE (24VDC)	PG	✓
	14	L425194	2 WAY SHUTTLE VALVE	PO	✓
	15	L424334	QUICK REL. HOLD. VALVE	PO	✓
	16	L424323	QUICK RELEASE VALVE	PO	✓
	17	L422515	BRAKE VALVE (PARKING)	PR	✓
	18	A0154Y08	AIR PRESSURE GAUGE	PZ	✓
	19	0-3551007-0-01	BRAKE CHAMBER	PE	✓
	20	L424114	AIR TOGGLE VALVE	PR	✓
	21	A3651Y06	AIR CYLINDER (EXCH.)	PE	✓
	22	A4771Y03	AIR CYLINDER (LIFT)	PE	✓
	23	L424468	AIR CYLINDER (CLAMP)	PE	✓
	24	L425436	HUMPHREY AIR VALVE 4-WAY	PR	✓

TR10 (PHASE III) 24 VDC

ENG DWG NO: A7483W02

SHEET

CONT ON

DESCRIPTION (30): AIR SCHEMATIC

DRAWN: CVR

DATE: 8-3-95

CHECKED

DATE

APP: MW

DATE: 8-8-95

APP

DATE

REVISIONS

NO	ER	DESCRIPTION	DR	CK	APP	MF
1	7441.1	NEW RELEASE				
2	11778 .39	IT-1 WAS REFERENCE. 9-18-00 IT-3 WAS 0-3436005-0-02, IT-11 WAS Z71114-6, IT-18 WAS L425793.	HH	KW	MW	
C	12408 .33	NO CHANGE				

ASSEMBLY DESCRIPTION

ER	
DR	
CK	
APP	
MF	

SHEET 1 — CONT ON — ENG DWG NO A7483-02

Tamper
Division Canron Corp.
2401 Edmund Road—Box 20
Cayce—West Columbia,
S. C. 29171-0020
(803) 794-9160

ENGS-34

ENG. DWG. NO. A7483W02

FOR REFERENCE ONLY

REVISIONS							
NO	ER	DESCRIPTION	ZONE	DR	CK	APP	MF
1	7461.1	NEW RELEASE	ALL	CWR			
C	12408 .33	L/H TIE EXCH. LOCK WAS HOSED NORMALLY OPEN. (PE 21.2)	D3	HH	DEB	APD	6-19-03

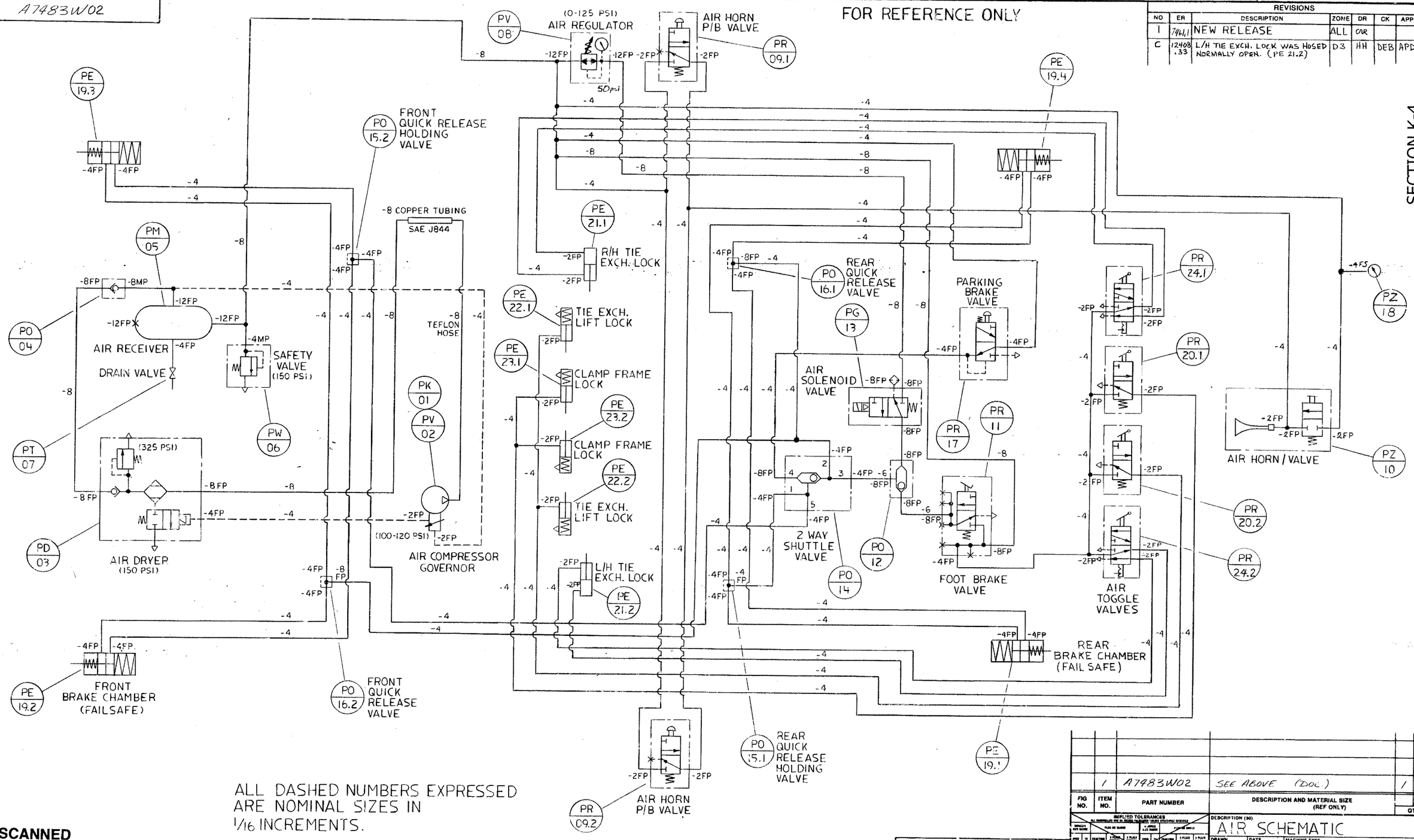

ALL DASHED NUMBERS EXPRESSED ARE NOMINAL SIZES IN 1/16 INCREMENTS.

FIG NO.	ITEM NO.	PART NUMBER	DESCRIPTION AND MATERIAL SIZE (REF ONLY)	QTY
	1	A7483W02	SEE ABOVE (DOC.)	1

DESCRIPTION (30): AIR SCHEMATIC

		DATE
DRAWN	CWR	8-3-95
CHECKED		
APP-ENG	HH	8-8-95
APP-MFG		

MACHINE TYPE: TR10 (PHASE III) 24VDC

Tamper — Division Canton Corp. 2401 Bluff Road P.O. Box 20 Cayce-West Columbia S.C. 29171-0020 (803) 794-9160

ENG. DWG. NO. A7483W02

SHEET 1 CONT. ON —

IMPLIED TOLERANCES — ALL DIMENSIONS ARE IN INCHES — TOLERANCE UNLESS OTHERWISE SPECIFIED

NOMINAL SIZE RANGE OVER	TO	PLUS OR MINUS FRACTION	2 PLACE DECIMAL	3 PLACE DECIMAL	NOMINAL SIZE RANGE OVER	TO	PLUS OR MINUS FRACTION	2 PLACE DECIMAL	3 PLACE DECIMAL
—	1	1/64	.01	.003	6	24	3/64	.03	.008
1	6	1/32	.02	.005	24	—	1/16	.05	.010

ANGULAR DIMENSIONS PLUS OR MINUS 1 DEGREE

ALL MACHINED SURFACES TO HAVE A SURFACE FINISH OF 125 MICROINCHES UNLESS OTHERWISE SPECIFIED

WEIGHT lbs. — 3rd ANGLE PROJECTION

DO NOT SCALE — LAST ITEM NO. USED

SCANNED

REVISION ____ OF THIS DRAWING HAS BEEN SCANNED INTO THE CAD/CAM DATA BASE.

DMS 3/21/02
INITIALS DATE

THIS DOCUMENT CONTAINS PROPRIETARY INFORMATION AND SUCH INFORMATION MAY NOT BE DISCLOSED TO OTHERS FOR ANY PURPOSE OR USED FOR MANUFACTURING PURPOSES WITHOUT THE WRITTEN PERMISSION OF TAMPER.

ENGS-32

SECTION KO

PNEUMATIC COMPONENTS OPTIONS

AIR TANK SHUTDOWN, 24VDC

SECTION KO-0901 DWG.NO. A8516WAB

ITEM	DESCRIPTION	PART NUMBER		QTY
002	37/FLARE TUBE 90 DEG SW	0-3304057-0-02		1
003	REDUCER	0-3304132-0-06		1
004	SWIVEL JIC/90/JIC FITTING	0-3304148-0-06		1
005	37 DEG SPLIT FLANGE ADAPTER	0-3304132-0-02		1
006	1/4 SWIVEL HOSE END	L411366		2
007	ENGINE AND AIR BRAKE HOSE	0-3305003-0-01	(FT)	1
008	90 DEG JIC MALE PIPE	L420002		1
009	1/4 MP PLUG	L420112		1
010	FILTER MUFFLER	L423741		1
011	10-24 X 2 1/4 SOCHD CAPSCR	A0041194		2
012	#10 MED PLAIN WASHER	A0059025		2
013	10-24 ESNA NUT	0-3011001-0-79		2
014	16/2 CABLE	L411089	(FT)	15
015	WATER TIGHT CONNECT	L40818		2
016	QUICK CONNECT LUG	L422502		1
017	IN LINE FUSE HOLDER	L425024		1
018	5 AMP FUSE	L41580		1
019	BUTT WIRE CONNECTOR	A3191Y02		1
020	AIR VALVE, 24VDC	0-3413003-0-15		1

AIR TANK SHUTDOWN
DWG NO A8516WAB
SECTION KO-0901

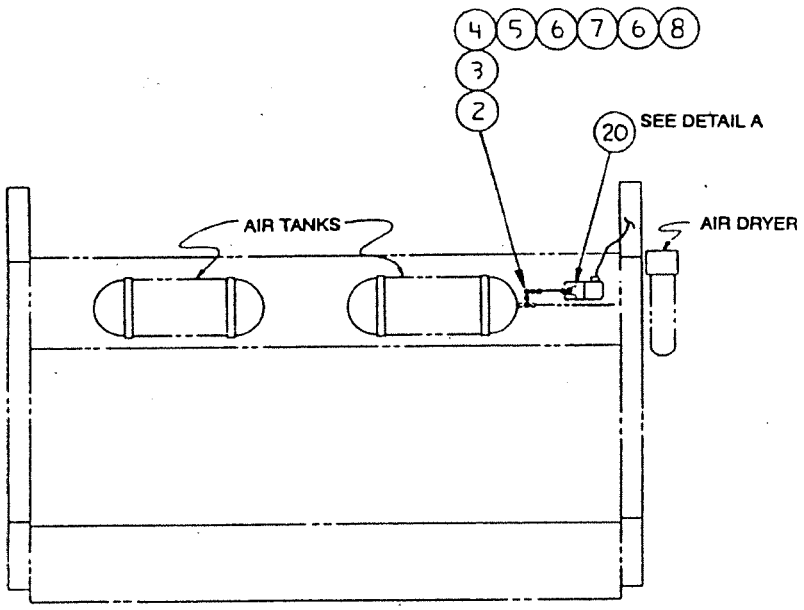

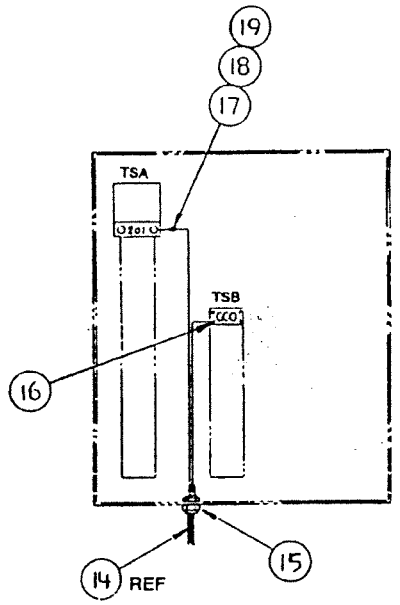

ENGINE COMPARTMENT BOX

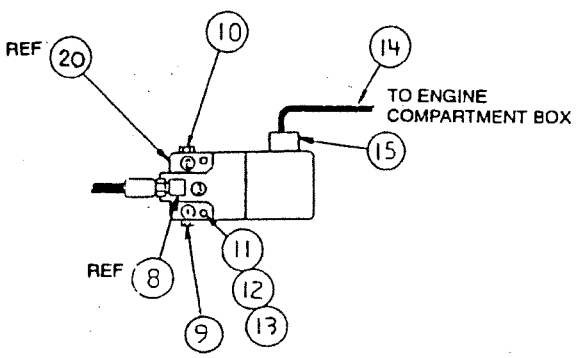

DETAIL A

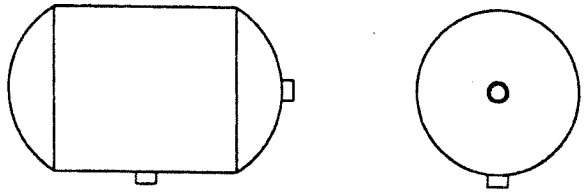

PURGE TANK

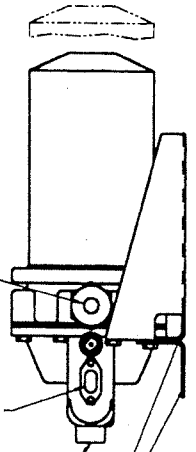

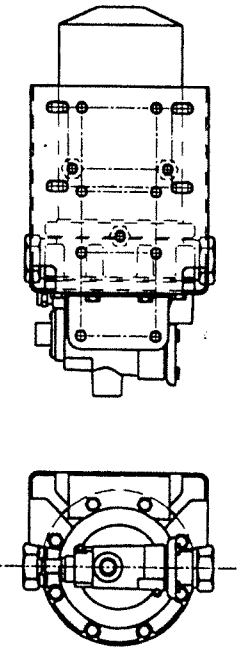

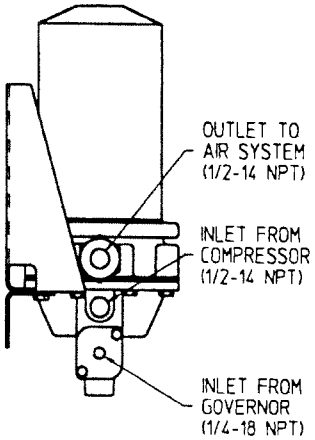

REPLACEMENT PARTS

DESICCANT CARTRIDGE	C9785X03
HEATER/THERMOSTAT 24V	C9785X05
SAFETY VALVE	C9785X06
BLEED VALVE	C9785X07
UNLOADER VALVE	C9785X08
CHECK VALVE	C9785X09

DRYER AND PURGE TANK KIT
DWG NO C9785X01
SECTION KO-0905
REV 3

ENG.DWG.NO.
D2417XAA

REVISIONS							
NO	ER	DESCRIPTION	ZONE	DR	CK	APP	MF
1	6444.1	NEW RELEASE		HH			
2	8315.1	ADDED NOTE 2. 8-7-96		HH	JA	HAWK	
C	100151	IT-1 WAS L423155, IT-4 WAS L423157, QTY-1. ADDED IT-6 AND NOTE 3. 12-16-05	B2, PL	HH	DES	APD	

SECTION KO-0906

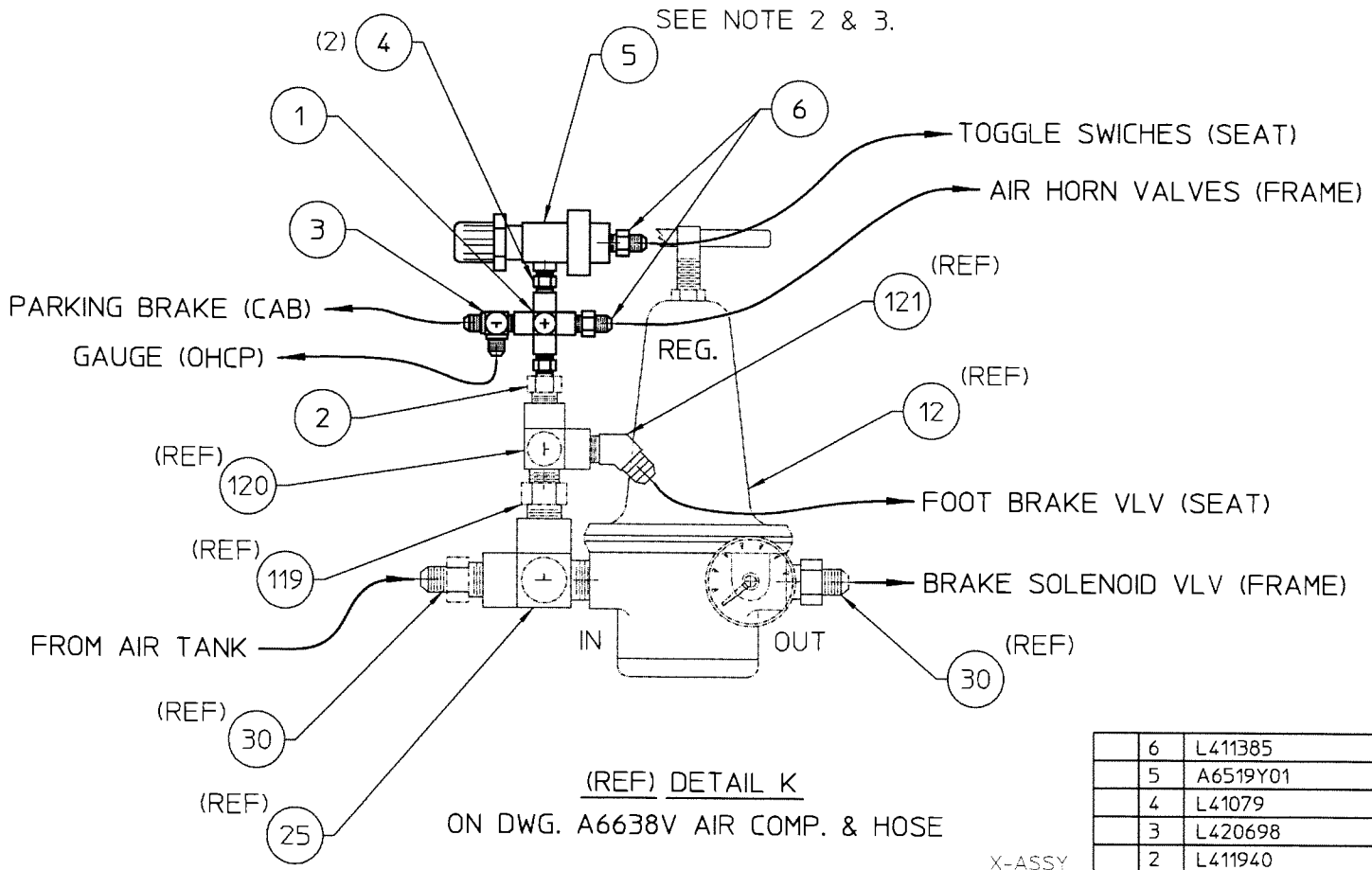

(REF) DETAIL K

ON DWG. A6638V AIR COMP. & HOSE

X-ASSY
X2
PLOT .5

FIG NO.	ITEM NO.	PART NUMBER	DESCRIPTION AND MATERIAL SIZE (REF.ONLY)	QTY
	6	L411385	1/4 MP/JIC STRT	2
	5	A6519Y01	PRESS. PROTECTION VALVE	1
	4	L41079	1/4 HEX NIPPLE	2
	3	L420698	1/4 MP/JIC/JIC TEE	1
	2	L411940	1/2 TO 1/4 REDUCING NIPPLE	1
	1	L420852	1/4 MP CROSS	1

NOTE:

1. ALL ITEM NUMBERS WITH (REF) ARE ON DWG. A6638V AIR COMP. & HOSE.
2. ITEM 5 FACTORY SETTING IS 75 PSI, RESET PROTECTION VALVE TO 60-65 PSI.
3. THE BRAKE PROTECTION VALVE IS TO ISOLATE THE TOGGLE SWITCHES ON OPERATORS SEAT.

IMPLIED TOLERANCES
ALL DIMENSIONS ARE IN INCHES-TOLERANCE UNLESS OTHERWISE SPECIFIED

NOMINAL SIZE RANGE		PLUS OR MINUS			NOMINAL SIZE RANGE		PLUS OR MINUS		
OVER	TO	FRACTION	2 PLACE DECIMAL	3 PLACE DECIMAL	OVER	TO	FRACTION	2 PLACE DECIMAL	3 PLACE DECIMAL
-	1	1/64	.01	.003	6	24	3/64	.03	.006
1	6	1/32	.02	.005	24	-	1/16	.05	.010

ANGULAR DIMENSIONS PLUS OR MINUS 1 DEGREE

√ ALL MACHINED SURFACES TO HAVE A SURFACE FINISH OF 125 MICROINCHES UNLESS OTHERWISE SPECIFED.

WELDING SPECIFICATION

UNLESS OTHERWISE SPECIFIED ALL WELDS SHOULD ADHERE TO FAIRMONT TAMPER WELDING SPECIFICATION NO. 101

WEIGHT lbs.

3rd ANGLE PROJECTION

DO NOT SCALE

SHEET 1 CONT. ON –

DESCRIPTION 124: BRAKE PROTECTION VALVE

DRAWN HH	DATE 1-11-94	MACHINE TYPE TR10	
CHECKED DGV	DATE 1-14-94		
APP-ENG HAWK	DATE 1-14-94		
APP-MFG	DATE		
LAST ECR. 10015 1	CHECKED dvan	ENG.DWG.NO. D2417XAA	
	DATE 11-Jan-06		

Fairmont Tamper™ 2401 Edmund Road-Box 20 Cayce-West Columbia, South Carolina 29171-0020 (803) 822-9160

THIS DOCUMENT CONTAINS PROPRIETARY INFORMATION AND SUCH INFORMATION MAY NOT BE DISCLOSED TO OTHERS FOR ANY PURPOSE OR USED FOR MANUFACTURING PURPOSES WITHOUT THE WRITTEN PERMISSION OF FAIRMONT TAMPER.

Section L
Electrical Components

PARTS LIST

ITEM NO	PART NUMBER	DESCRIPTION	QUANTITY
1	BLANK		
~~2~~	~~L420676~~	~~BATTERY SWITCH~~	~~1~~
~~3~~	~~0-3120002-0-01~~	~~STARTER SOLENOID (24V)~~	~~1~~
4	H5138Y01	LOCKOUT LEVER KIT, BATT.	1
5	A4992Y23	PIN, 1/4" BALL LOCK	2
6	A4992Y24	LANYARD, 6"-LG.	2
7	C3244Y01	TIEDOWN ANGLE	1
8	BLANK		
9	4012283	ELECTRICAL SCHEMATIC, MACHINE	1
10	BLANK		
11	BLANK		
12	4012342	JUNCTION BOX WIRING DIAG	1
13	A7519YAA	CL510 (BATTERY-GROUND)	1
14	A7520YAA	CL511 (BATTERY JUMPER)	1
15	A7521YAA	CL512 (BATTERY-BAT. SW)	1
16	A7523YAA	CL514 (AIR DRYER)	1
17	A7524YAA	CL515 (BAT. SW-STARTER)	1
18	BLANK		
19	B3027X03	MATTING, BATTERY BOX	1
20	0-2403434-0-02	CABLE ASSY (GRD. STRAP)	1
21	A0036063	3/8-16 x 1" HEX HD SCR	2
22	L40818	STRAIN RELIEF	2
23	L40835	MARR CONNECTOR	6
24	A0071063	3/8-16 x 3/4 WELD STUD	3
25	A0059003	3/8 FLAT WASHER	3
26	L40387	3/8-16 LOCK NUT	3
27	A0071057	3/8-16 WING NUT	4
28	D6443Y01	BATTERY TERM. PROTECTOR	2
29	D6443Y02	BATTERY TERM. PROTECTOR	2
30	D6443Y03	TERMINAL INSULATOR CAP	3
31	D6443Y04	TERMINAL INSULATOR CAP	3
~~32~~	~~A0050078~~	~~1/4-20 x 3/4 RD HD MACH SCR~~	~~2~~
33	A0059001	1/4 FLAT WASHER	68

ASSEMBLY IDENTIFIER

TR10 24VDC (NS SUPPLIED JD)

ASSEMBLY DESCRIPTION

ER
DR
CK
APP
MF

REVISIONS

NO	ER	DESCRIPTION	DR	CK	APP	MF
A	13080.4	NEW RELEASE	HH			
B	13080.13	DELETED ITEM 2. 10-6-04	HH	DEB	APD	
C	13117.2	ADDED IT. 4, 5 & 6. DELETED IT. 32. 2-7-05	HH	DEB	APD	
D	13144.4	DELETED IT-3, ADDED IT-28 THRU 31. 8-15-05	HH	DES	APD	
E	100780	ITEM 9 WAS C2543V01 AND ITEM 12 WAS C3014W02. 9-12-06	HH	DES	JBR	

SHEET 1 CONT ON 2
LAST ECR. .4 13144
CHECKED dvan DATE 18-Aug-05
DWG NO C2982WAE

DWG NO C2982WAE
SHEET 1 CONT ON 2
DESCRIPTION (24) GENERAL ELECTRICAL ASSY.
DRAWN HH DATE 8-19-04
CHECKED DEB DATE 8-19-04
APP APD DATE 8-19-04
APP DATE

Fairmont Tamper™
2401 Edmund Road-Box 20
Cayce-West Columbia,
South Carolina 29171-0020
(803) 822-9160

PARTS LIST

ASSEMBLY IDENTIFIER

ITEM NO	PART NUMBER	DESCRIPTION	QUANTITY
34	L40237	1/4-20 LOCK NUT	68
35	A0050079	1/4-20 x 1" RD HD MACH SCR	4
36	BLANK		
37	L422321	HOSE CLAMP	24
38	L422322	HOSE CLAMP	16
39	A0071062	1/4-20 x 3/4 WELD STUD	60
40	L420492	6" TIE WRAP	50
41	L420491	3 1/2" TIE WRAP	25
42	L425405	1/2 PIPE COUPLING CLOSE	2
43	L40830	1/2 LOCK RING	4
44	0-3221005-0-00	CONDULET	2
45	A0050055	#10-24 x5/8 RD HD MACH SCR	6
46	A0061006	#10 LOCKWASHER	6
47	A0055006	#10-24 HEX NUT	6
48	D6454XAA	SWITCH BOX KIT	1
49	200640	ENCLOSURE	2
50	189832	DECAL	2
51	F020177	HOLE SEAL	2
52	F040111	CONTACT BLOCK	2
53	F040119	OPERATOR	2
54	F040178	PUSH BUTTON	2
55	133115	VENT PLUG	2
56	0-3230020-0-01	VALVE CONNECTOR	1
57	4012284	CABLE DIAGRAM	1
58	C2895WAE	ENG CONTROL PANEL ASSY	1
59	4012388	SW. HD BOX WIRING DIA	1
60	BLANK		
61	C2969WAB	CONTROL BOX, SWIVEL HD.	1
62	C2884V04	ENGINE CONTROL PANEL WIRING DIAG	1
63	176444	CABLE, 16/2 SUPER-TREX (FT)	50
64	BLANK		
65	BLANK		
66	BLANK		

TR10 24VDC (NS SUPPLIED JD)

ASSEMBLY DESCRIPTION

ER
DR
CK
APP
MF

REVISIONS

NO	ER	DESCRIPTION	DR	CK	APP	MF
A	13080.4	NEW RELEASE	HH			
B	13080.13	ADDED ITEMS 48 THRU 55 AND 63. 10-6-04	HH	DEB	APD	
E	100780	ITEM 57 WAS C2953V02, ITEM 59 WAS C2960W02, ITEM 62 WAS C2884V03. 9-12-06	HH	DES	JBR	

DWG NO C2982WAE
SHEET 2
CONT ON -
DESCRIPTION (24) GENERAL ELECTRICAL ASSY.
DRAWN HH
DATE 8-19-04
CHECKED DEB
DATE 8-19-04
APP APD
DATE 8-19-04
APP
DATE

SHEET 2
CONT ON -
LAST ECR 13144
CHECKED dvan
DATE 18-Aug-05
DWG NO C2982WAE

Fairmon Samper™
2401 Edmund Road-Box 20
Cayce-West Columbia,
South Carolina 29171-0020
(803) 822-9160

ENG DWG NO
C2982WAE

WIRING NOTES: JOHN DEERE ENGINE

1. DISCONNECT WIRE FROM ALTERNATOR "POS." TERMINAL AND STARTER POSITIVE TERMINAL. (TAPE UP AND TIE BACK)
2. CONNECT FUSED "RED" AND "BLACK" WIRES FROM ENGINE ECM HARNESS "REAR OF ENGINE" TO POSITIVE AND GROUND ON STARTER (POWERING CONTROL BOX).
3. INSTALL SUPPLIED SUPPRESSION DIODE ACROSS STARTER MOTOR SLAVE RELAY.
4. CONNECT JD CONTROL BOX CABLE TO RECEPTICLE INSIDE ENGINE COVER.

REVISIONS							
NO	ER	DESCRIPTION	ZONE	DR	CK	APP	MF
A	13080.4	NEW RELEASE		HH			
B	13080.13	DELETED IT-2. ADDED ITEMS 48 THRU 55 AND 63 10-6-04	A1, A3	HH	DEB	APD	
C	13117.2	ADDED ITEMS 4, 5 & 6. DELETED ITEM 32	A1, B4	HH	DEB	APD	2-7-05
D	13144.4	REMOVED IT-3. ADDED IT-28 THRU 31.	A1, A2, B1, C3	HH	DES	APD	8-15-05
E	100780	ADDED WIRING NOTES: JOHN DEERE ENGINE.	C-1	HH	DES	JBR	9-12-06

SECTION L-I

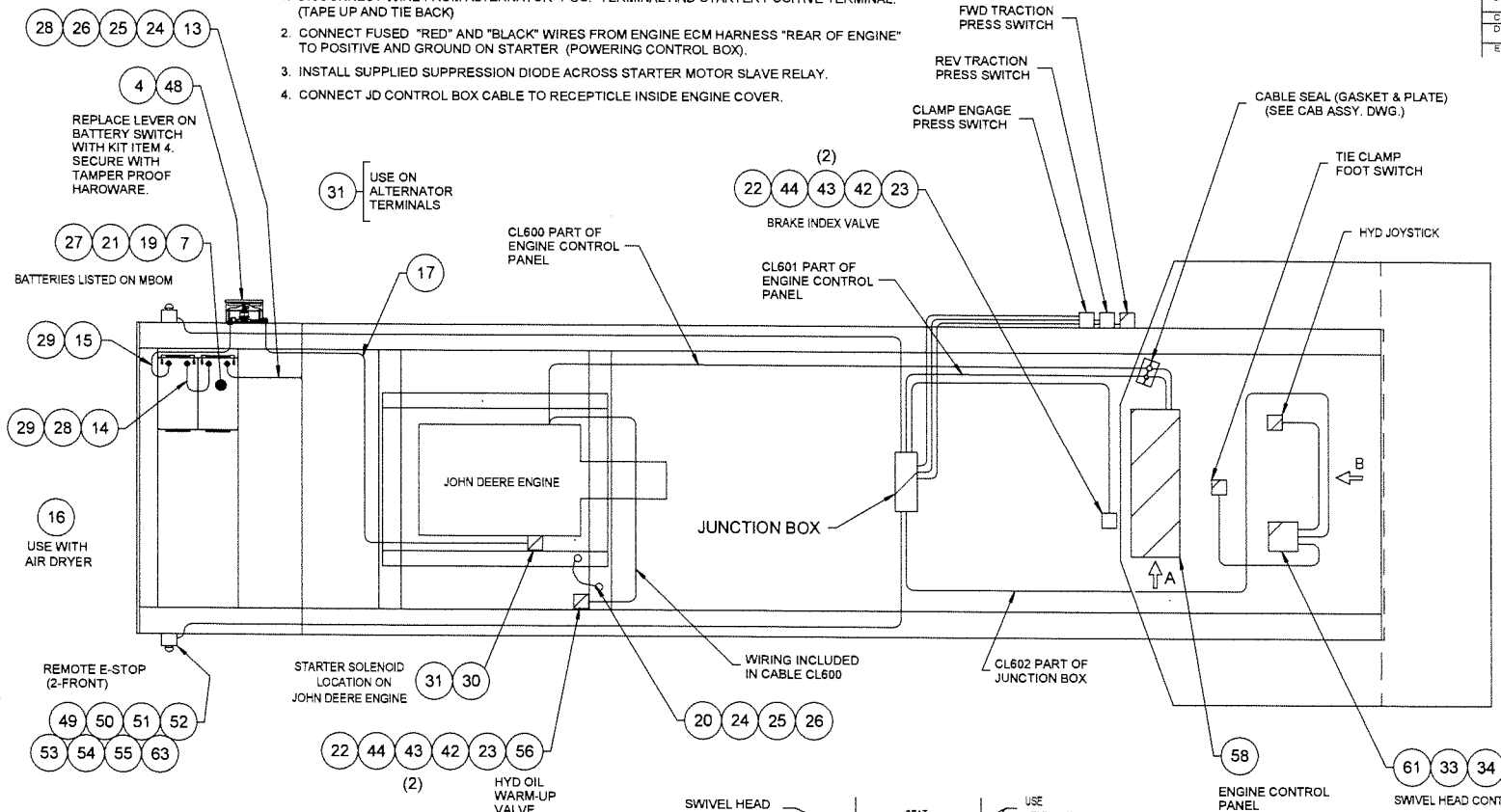

9 ELECTRICAL SCHEMATIC
12 JUNCTION BOX WIRING DIAGRAM
57 CABLE DIAGRAM
59 SWIVEL HD BOX WIRING DIAGRAM
62 ENG. CONTROL PANEL WIRING DIAG.

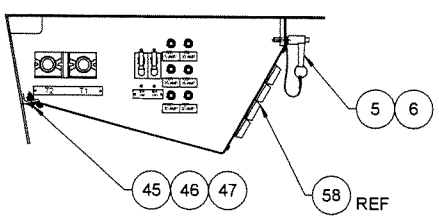

VIEW A
ENLARGED

USE ITEM 58 AS TEMPLATE TO DRILL 1/4" HOLES IN ROOF TABS.
USE ITEMS 5 TO HOLD PANEL. SECURE ITEMS 5 BY USING ITEMS 6 AND FASTEN TO PANEL INBOARD OF PIN USING NAMEPLATE HARDWARE.

USE ITEMS 33, 34, 37, 38, 39, 40 AND 41 AS REQUIRED.

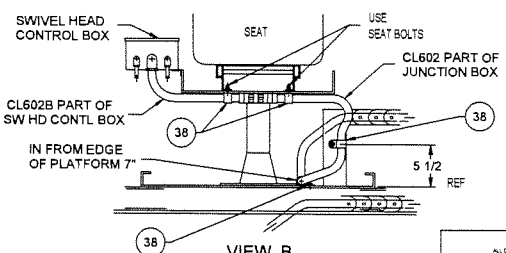

VIEW B
ENLARGED

FIG NO.	ITEM NO	PART NUMBER	DESCRIPTION AND MATERIAL SIZE (REF ONLY)	QTY
			SEE SEPERATE PARTS LIST	

IMPLIED TOLERANCES
ALL DIMENSIONS ARE IN INCHES-TOLERANCE UNLESS OTHERWISE SPECIFIED

NOMINAL SIZE RANGE OVER	TO	PLUS OR MINUS FRACTION	2 PLACE DECIMAL	3 PLACE DECIMAL	NOMINAL SIZE RANGE OVER	TO	PLUS OR MINUS FRACTION	2 PLACE DECIMAL	3 PLACE DECIMAL
-	1	1/64	.01	.003	6	24	5/64	.03	.008
1	6	1/32	.02	.005	24	-	1/16	.05	.010

ANGULAR DIMENSIONS PLUS OR MINUS 1 DEGREE.
ALL MACHINED SURFACES TO HAVE A SURFACE FINISH OF 125 MICROINCHES UNLESS OTHERWISE SPECIFIED.

WELDING SPECIFICATION
UNLESS OTHERWISE SPECIFIED ALL WELDS SHOULD ADHERE TO FAIRMONT TAMPER WELDING SPECIFICATION NO 101

WEIGHT
SCALE
3D ANGLE PROJECTION
DO NOT SCALE
SHEET 1 OF 1

DESCRIPTION (JN) GENERAL ELECTRICAL ASSY.

DRAWN HH	DATE 8-19-04	MACHINE TYPE TR10 (NS SUPPLIED JD)
CHECKED DEB	DATE 8-19-04	
APPROVED APD	DATE 8-19-04	Fairmont Tamper
REPLACE D	DATE	2401 Edmund Road Box 25 Greenwood Columbia South Carolina 29171-0001 (803) 622-0150
LAST EDR 13144 .4	CHECKED dvan DATE 18-Aug-05	ENG DWG NO C2982WAE

THIS DOCUMENT CONTAINS PROPRIETARY INFORMATION AND SUCH INFORMATION MAY NOT BE DISCLOSED TO OTHERS FOR ANY PURPOSE OR USED FOR MANUFACTURING PURPOSES WITHOUT THE WRITTEN PERMISSION OF FAIRMONT TAMPER.

SECTION L-2

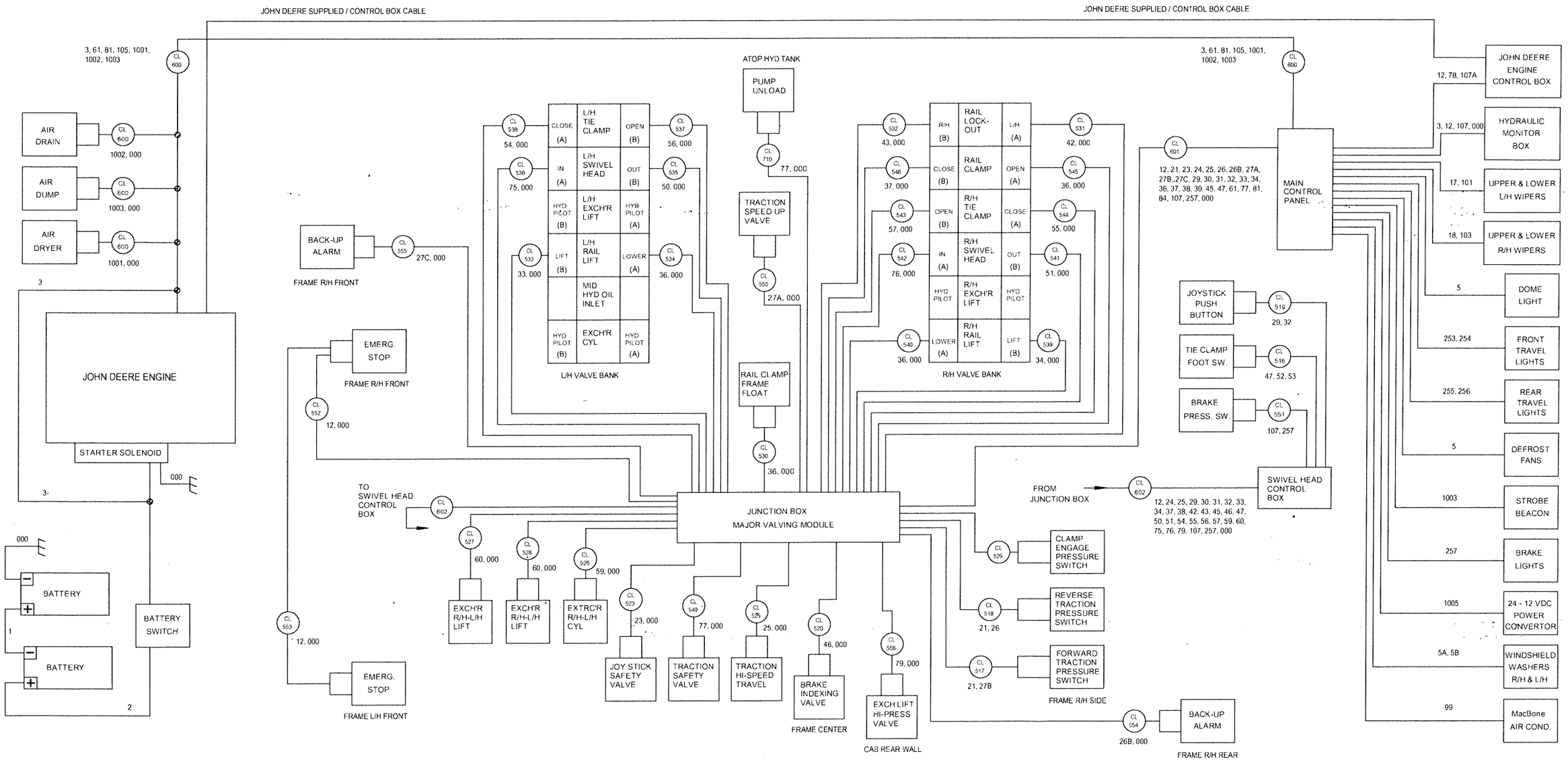

CONFIDENTIAL
© COPYRIGHT 2003 HARSCO TRACK TECHNOLOGIES. THIS DRAWING OR DOCUMENT IS THE PROPERTY OF HARSCO TRACK TECHNOLOGIES AND EMBODIES CONFIDENTIAL INFORMATION, TRADE SECRET INFORMATION, AND/OR KNOW-HOW THAT IS THE PROPERTY OF HARSCO TRACK TECHNOLOGIES. BY ACCEPTING THIS DRAWING OR DOCUMENT, THE RECIPIENT AGREES (1) NOT TO PROVIDE OR OTHERWISE MAKE AVAILABLE THE DRAWING OR DOCUMENT OR ANY INFORMATION OR KNOW-HOW EMBODIED THEREIN, TO ANY THIRD PARTY AND (2) NOT TO REPRODUCE OR USE THE DRAWING OR DOCUMENT TO MANUFACTURE ANY APPARATUS OR DEVICE WITHOUT THE PRIOR WRITTEN AUTHORIZATION OF HARSCO TRACK TECHNOLOGIES.

SOLID EDGE DRAWING

IMPLIED TOLERANCES
ALL DIMENSIONS ARE IN INCHES - TOLERANCE IS UNLESS OTHERWISE SPECIFIED

	INCH		METRIC	
	PLUS DRAWING		PLUS DRAWING	
	MIN	MAX	MIN	MAX
0	0.0	0.5	0	13
1	0.0	0.5	0	13
2	0.0	0.5	0	13
3	0.0	0.5	0	13
4	0.0	0.5	0	13

UNLESS OTHERWISE SPECIFIED ALL MACHINED SURFACES WILL HAVE A SEPARATE SET OF DIMENSIONS AND ALL FINISHES OF 125 RMS OR BETTER

THIRD ANGLE PROJECTION

ALL DEBURRING SHOULD BE DONE WITH A MINIMUM OF 0.5 MM

CHANGE	R/L	REVISION	DATE
100691	A	RELEASE	8-21-06

Description: CABLE DIAGRAM, NS
Drawing Number: ----------
Name Type: TR10, NS
Drawn: hhill
Date Drawn: 8-21-06
Scale:
Date: DOCUMENT ONLY
Eng: DES
Mfg: APD
Part Number: 4012284
Size: D
Sheet: 1 of 1

HTT
Harsco Track Technologies
Harsco
Columbia, SC

Plotted by hhill on 9/7/2006 4012284.dft

PARTS LIST

FIG	ITEM NO	PART NUMBER	DESCRIPTION (29)	ASSEMBLY IDENTIFIER AA	AB	AC	AD
				QUANTITY			
	1	C3019X01	ELECTRICAL ENCLOSURE	1	1	1	1
	2	0-3261000-0-03	STRAIN RELIEF	2	2	2	2
	3	L420607	90° STRAIN RELIEF	2	2	2	2
	4	A7532YAA	CLS23 JOYSTICK SAFETY	1	1	1	REF
	5	A7533YAA	CLS24 TRACTION HI SPEED DOG	1	1	1	REF
	6	A7534YAA	CLS25 TRACTION HI SPEED DOG	1	1	1	REF
	7	A7535YAA	CLS26 EXCH CYL REF	1	1	1	REF
	8	A7536YAA	CLS27 EXCH LIFT REF	1	1	1	REF
	9	A7537YAA	CLS28 EXCH LIFT REF	1	1	1	REF
	10	A7538YAA	CLS29 RAIL CLAMP PRESS SW	1	1	1	REF
	~~11~~	~~L422555~~	~~BUSHING~~	~~2~~	~~0~~		
	12	A7540YAA	CLS31 RAIL LOCK-OUT CMX	1	1	1	REF
	13	A7541YAA	CLS32 RAIL LOCK-OUT	1	1	1	REF
	14	A7542YAA	CLS33 L/H RAIL LIFT	1	1	1	REF
	15	A7543YAA	CLS34 L/H RAIL LIFT	1	1	1	REF
	16	A7544YAA	CLS35 L/H SWIVEL HEAD	1	1	1	REF
	17	A7545YAA	CLS36 L/H SWIVEL HEAD	1	1	1	REF
	18	A7546YAA	CLS37 L/H TIE CLAMP	1	1	1	REF
	19	A7547YAA	CLS38 L/H TIE CLAMP	1	1	1	REF
	20	A7548YAA	CLS39 R/H RAIL LIFT	1	1	1	REF
	21	A7549YAA	CLS40 R/H RAIL LIFT	1	1	1	REF
	22	A7550YAA	CLS41 R/H SWIVEL HEAD	1	1	1	REF
	23	A7551YAA	CLS42 R/H SWIVEL HEAD	1	1	1	REF
	24	A7552YAA	CLS43 R/H TIE CLAMP	1	1	1	REF
	25	A7553YAA	CLS44 R/H TIE CLAMP	1	1	1	REF
	26	A7554YAA	CLS45 RAIL CLAMPS	1	1	1	REF
	27	A7555YAA	CLS46 RAIL CLAMPS	1	1	1	REF
	28	A7588YAA	CL549 TRACTION SAFETY	1	1	1	REF
	29	B4151YAA	CL550 SPEED UP VALVE	1	1	1	REF
	30	C3026XAA	CL 601 — MAIN CONTROL PANEL	1	0	0	0
	31	C3027XAB	CL 602 SWIVEL HD CONTROL BOX	1	0	0	0
	32	B1406T03	BUS BAR	1	1	0	0
	33	B1382Y02	SUPPORT	2	2	2	2
				TR10 (PHASE III) 24 VDC	TR-10 CUMMINS	TR10, CUMMINS TIER II	NS TR10, John Deere

REVISIONS

NO	EA	DESCRIPTION		DR	CK	APP	MF
1	6453.5	NEW RELEASE					
2	6572.3	IT#3 QTY WAS 2B	3-3-91				
3	5786.2	P/N IT. 2 WAS A1230Y16 DELETED IT. 11	10-29-91				
5	6993.54	IT. 32 WAS B1406T01	11-18-92	HH			
9	11832.1	IT 31 WAS C3027XAA		EP			
10	11778.36	ITEM 3 QUAN. WERE 29 & 29.	7-24-00	HH			
K	13080.28	IT. 32 (AC) WAS QTY 1		JFB			
L	100250	RELEASED "AD"-TAB.	1-6-06	HH			

ASSEMBLY DESCRIPTION

EA	8578.6	13080.8	100250	
DR	HG	HH 3-16	HH	
CK	GC	3-20		
APP	HH 4-16-91			
MF				

ENG DWG NO: C3030W
SHEET 1 CONT ON 2
DESCRIPTION (30): JUNCTION BOX ASSY.
DRAWN: K. DUNN
DATE: 1-29-91
CHECKED: RJ
DATE: 1/15/91
APP: [illegible]
DATE: 2-11-91
APP
DATE

Tamper
Division Cenron Corp.
2401 Edmund Road—Box 20
Cayce-West Columbia, S. C. 29171-0020
(803) 794-9180

ENG DWG NO: C3030W
SHEET 1 CONT ON 2

TNGS-34

68456

PARTS LIST

FIG	ITEM NO	PART NUMBER	DESCRIPTION (29)	AA	AB	AC	AD							
				QUANTITY										
	34	B1382Y03	TERMINAL BLOCK (12 AWG)	15	15	19	19							
	35	C3448Y01	CL 710 PRESS VALVE	1	1	1	REF							
	36	0-3250003-0-01	BACKING STRIP	6	6	6	6							
	37	0-3254001-0-01	TERMINAL BOARD	6	6	6	6							
	38	L425479	DIODE	30	30	30	30							
	39	A9297Y03	#16 AWG WIRE (FT.)	4	4	4	4							
	40	L422502	QUICK CONNECT TERM. LUG	85	85	85	85							
	41	A0050009	#4-40 x 3/8 RD. HD. MACH. SCR.	12	12	12	12							
	42	A0061002	#4 LOCKWASHER	12	12	12	12							
	43	A0055002	#4-40 HEX NUT	12	12	12	12							
	~~44~~	~~A0071093~~	~~3/16 x 1/2 POP RIVET~~	4										
	45	B0970Y07	MARKING STRIP	40	40	40	40							
N	46	C3014W01	WIRING DIAGRAM (DOC.)	1	0	0	0							
	~~47~~	~~0327400 3-0-04~~	~~HOLE PLUG~~	1										
	48	A7526YAA	CL517 FORWARD TRACTION PRESSURE SWITCH	1	1	1	REF							
	49	A7527YAA	CL518 REVERSE TRACTION PRESSURE SWITCH	1	1	1	REF							
	50	A7529YAA	CL520 BRAKE INDEXING VALVE	1	1	1	REF							
	51	B0971T10	MOUNTING RAIL	1	1	1	1							
	52	B0970Y05	END CLAMP	2	2	2	2							
	53	B0970Y01	4 PLACE BLOCK	45	45	45	45							
	54	B0970Y02	END PLATE	1	1	1	1							
	55	L422498	TERM. LUG (YELLOW)	22	22	22	22							
	56	B0970Y06	CHAIN BRIDGE	2	2	2	2							
	57	A0050040	8-32 x 5/8 RD. HD. MACH. SCR.	2	2	2	2							
	58	A0061005	#8 LOCK WASHER	2	2	2	2							
	59	A0055005	8-32 HEX NUT	2	2	2	2							
	60	A0050069	10-32 x 5/8 RD. HD. MACH. SCR.	2	2	2	2							
	61	A0061006	#10 LOCK WASHER	2	2	2	2							
	62	A0055007	10-32 HEX NUT	2	2	2	2							
	63	C3026XAB	CL-601	0	1	0	0							
	64	C3027XAB	CL-602	0	1	1	1							
	65	C3014W02	JUNCTION BOX WIRING DIA	0	1	1	1							
	66	0-3211009-0-08	#6 AWG WIRE (FT)	3	3	3	3							
				TR10 (PHASE III) 24 VDC	TR-10 CUMMINS	TRID, CUMMINS TIER II	NS TRID, John Deere							

REVISIONS

NO	ER	DESCRIPTION	DR	CK	APP	MF
1	5450.5	NEW RELEASE				
2	5572.3	DELETED IT #47 ADD IT #35 3-8-91	NH	RA	Hawk	
4	6027.1	IT. 40 QTY. WAS 145, ADDED IT. 55, 7-27-92	HH	SZN	Hawk	
5	5993.5	IT. 34 QTY WAS 10. 11-18-92	HH	SZ	Hawk	
6	6548.1	ADDED IT. 56-62, DELETED IT. 44, 11-5-93	HH	SZ	Hawk	
7	10457.1	IT. 53 QTY. WAS 40.	W.G.	HL	SZ	
8	11038.1	ADDED ITEM 66.	MMS	HL	W.G.	
10	11778.36	IT-34 QUAN. WERE 16 & 16, IT-66 QUAN. WERE 7 & 0.	HH	HL	MW	7-29-03
K	13080.28	IT. 34 (AC) QTY WAS 15	JFB			
L	100250	RELEASED "AD"-TAB. 1-6-06	HH			

ASSEMBLY DESCRIPTION

ER	6518.6	13050.8	100250	
DR	W.G.	HH 3-16-04	HH	
CK	SZ	SZ 4-16-97		
APP	HH 4-16-97			
MF				

Tamper

Division Cannon Corp.
2401 Edmund Road–Box 20
Cayce-West Columbia,
S. C. 29171-0020
(803) 794-9160

ENG DWG NO. C3030W
SHEET 2 CONT ON 3
DESCRIPTION (30) JUNCTION BOX ASSY.
DRAWN K. DUNN
DATE 1-29-91
CHECKED
DATE 2/15/91
APP
DATE 2-11-91
APP
DATE

SHEET 2 CONT ON 3
ENG DWG NO. C3030W

ENGS-34

PARTS LIST

FIG	ITEM NO	PART NUMBER	DESCRIPTION (29)	AA	AB	AC	AD							
				QUANTITY										
	67	A1278Y10	1/2" 90 DEG STRAIN RELIEF	28	28	28	28							
	68	B1382Y04	TERMINAL BLOCK (6 AWG)	1	1	1	1							
	69	B1406T08	BUSBAR 8 3/4	0	0	1	1							
	70	176125	CONNECTOR DIN TYPE	–	–	–	23							
	71	176444	CABLE 16/2 SUPER-TREX (FT)	–	–	–	175							
	72	0-3212004-0-48	CABLE 16/3 SUPER-TREX (FT)	–	–	–	21							

ASSEMBLY IDENTIFIER

TRIO (PHASE III) 24 VDC	TRIO CUMMINS	TRIO, CUMMINS TIER II	NS TRIO John Deere

ASSEMBLY DESCRIPTION

ER		130250 .8	100250	
DR		HH 3-16-04	HH	
CK		5-26-04		
APP				
MF				

REVISIONS

NO	ER	DESCRIPTION	DR	CK	APP	MF
8	11038	RELEASED SHT. 3 W/ ITEM 67	MMS	HW	W.G.	
10	11778.36	IT-67 RUAN. WERE 1 & 0. ADDED IT-68. 7-24-00	HH	HW	MW	
K	19080.28	ADDED IT. 69	JFB	S	S	
L	100250	RELEASED "AD"-TAB. 1-6-06	HH	D.A.J.		

ENG DWG NO: C3030W

SHEET: 3 CONT ON: –

DESCRIPTION (30): JUNCTION BOX ASSY.

DRAWN: MMS DATE: 4-22-98 CHECKED: DATE: APP:

DATE: APP:

DATE: APP:

Tamper

TAMPER CORP.
2401 Edmund Road-Box 20
Cayce-West Columbia
South Carolina 29171-0020
Tel. (803) 794-9160

SHEET 3 CONT ON 1 ENG DWG NO C3030W

ENGS-34

American Blueprint of Columbia 318727

ENG. DWG. NO. C301

REVIS									
NO	ER	DESCRIPTION		ZONE	DR	CK	APP	MF
1	5953.5	NEW RELEASE		ALL				
2	5972.3	DELETE IT 47 ADD IT. 35	1-9-91	A2				
3	5166.1	DELETED IT. 11	10/29/91	B3,C3				
4	6027.1	ADDED IT. 55	7-27-92		HH			
5	5972.5	PICTORIAL CHG.	11-18-92	D3	HH			
6	6148.1	DELETED IT 44, ADDED IT. 56-62	4-5-93	B2,B3	HH			
7	10151	ADDED 5 TERMINALS & TERMINAL STRIP		D2	H.G.			
8	10938.1	ADDED ITEMS 66 & 67.		C3	HMS			
10	11778.36	ITEMS 67 WERE 3. (28-RD)	7-24-00	ALL C3	HH			
		ADDED IT-68 TO BUSBAR.						
K	12080.28	ADDED IT. 69			JFB			
L	100250	RELEASED "AD"-TAB ADDED "AD" NOTE AND CABLE REFERENCE.	1-6-06	B-4 F-3				

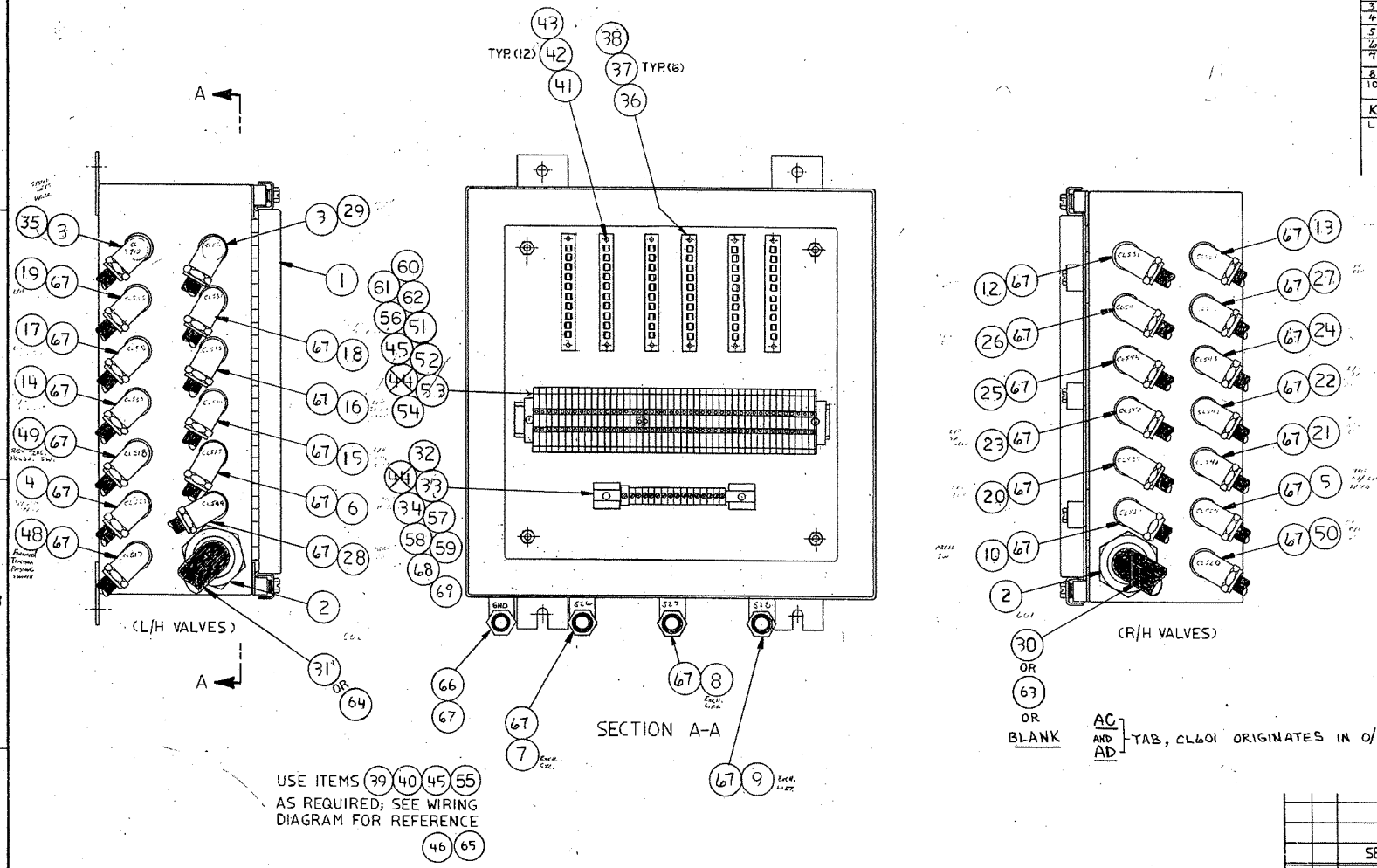

"AD"- TAB

USING SUPER-TREX CABLE, ITEMS 71 & 72 ALONG WITH DIN CONNECTORS ITEM 70. MAKE UP CABLES QTY "REF" USING LENGTH AND WIRE NUMBERS.

FIG NO.	ITEM NO.	PART NUMBER	DESCRIPTION AND MATERIAL SIZE (REF ONLY)	QTY
		SEE P/L		

DESCRIPTION (90): JUNCTION BOX ASSY.

DRAWN: KD Mann 1-29-91 | CHECKED: 2/15/91 | APPROVED: 2-11-91 | APP-MFG | DATE

MACHINE TYPE: TRIO(PHASE III) 24VDC

Tamper

SHEET ___ OF ___ | CONT. ___

ENG. DWG. NO. C3030W

IMPLIED TOLERANCES — ALL DIMENSIONS ARE IN INCHES — TOLERANCE UNLESS OTHERWISE SPECIFIED

NOMINAL SIZE RANGE OVER	TO	FRACTION	2 PLACE DECIMAL	3 PLACE DECIMAL	NOMINAL SIZE RANGE OVER	TO	FRACTION	2 PLACE DECIMAL	3 PLACE DECIMAL
—	1	1/64	.01	.002	6	24	1/64	.03	.008
1	6	1/32	.02	.005	24	—	1/32	.05	.010

PLUS OR MINUS

ANGULAR DIMENSIONS PLUS OR MINUS 1 DEGREE

ALL MACHINED SURFACES TO HAVE A SURFACE FINISH OF 125 MICROINCHES UNLESS OTHERWISE SPECIFIED.

WEIGHT: lbs. | DO NOT SCALE | 3rd ANGLE PROJECTION | LAST ITEM NO. USED

THIS DOCUMENT CONTAINS PROPRIETARY INFORMATION AND SUCH INFORMATION MAY NOT BE DISCLOSED TO OTHERS FOR ANY PURPOSE OR USED FOR MANUFACTURING PURPOSES WITHOUT THE WRITTEN PERMISSION OF TAMPER.

an american blueprint of columbia

SECTION L-4

CL601 -ENG PANEL-JUNCT BOX

CL602 -JUNCT BOX - SW HD BOX

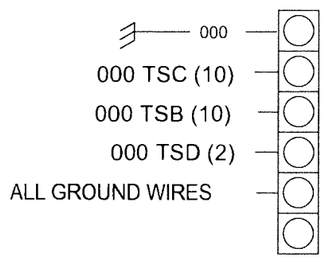

GSA

GROUNDING STRAP

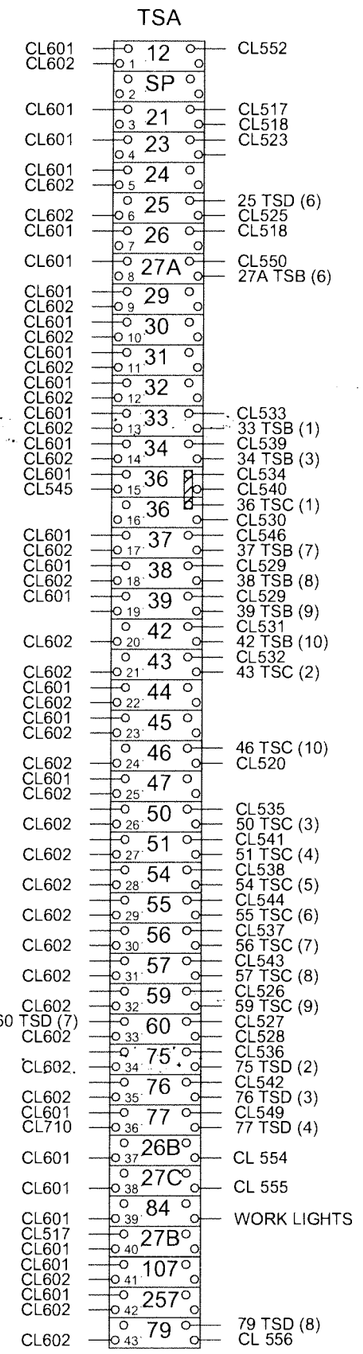

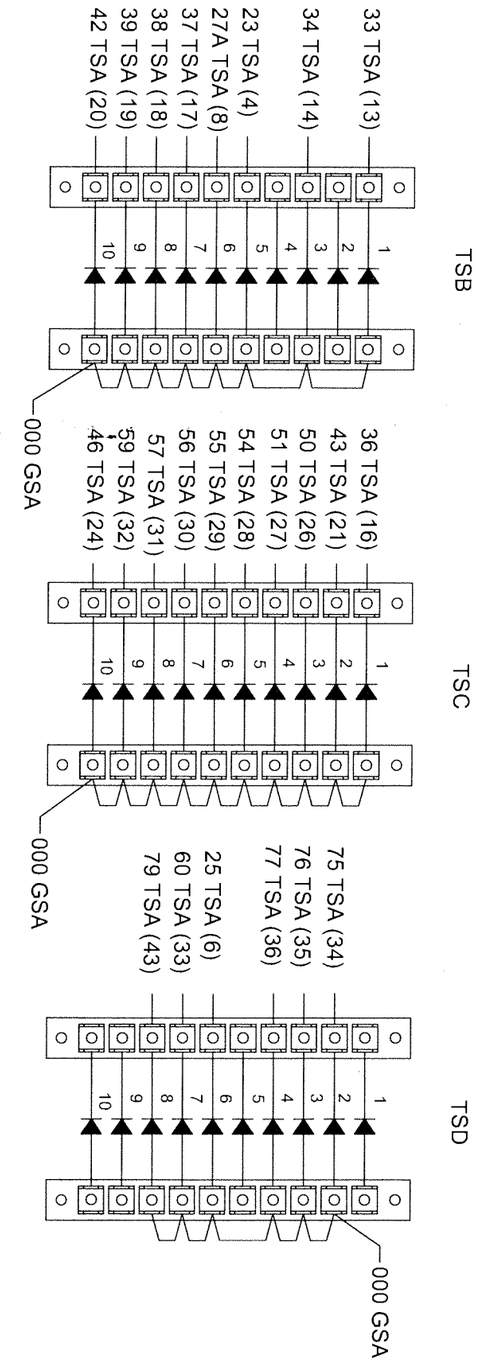

NOTES:

1. ALL WIRES # 16 AWG WIRE UNLESS OTHERWISE NOTED

SOLID EDGE DRAWING

CONFIDENTIAL
© COPYRIGHT 2001 HARSCO TRACK TECHNOLOGIES THIS DRAWING OR DOCUMENT IS THE PROPERTY OF HARSCO TRACK TECHNOLOGIES AND EMBODIES CONFIDENTIAL INFORMATION, TRADE SECRET INFORMATION, AND/OR KNOW-HOW THAT IS THE PROPERTY OF HARSCO TRACK TECHNOLOGIES. BY ACCEPTING THIS DRAWING OR DOCUMENT, THE RECIPIENT AGREES (1) NOT TO PROVIDE, OR OTHERWISE MAKE AVAILABLE, THE DRAWING OR DOCUMENT, OR ANY INFORMATION OR KNOW-HOW EMBODIED THEREIN, TO ANY THIRD PARTY AND (2) NOT TO REPRODUCE OR USE THE DRAWING OR DOCUMENT TO MANUFACTURE ANY APPARATUS OR DEVICE, WITHOUT THE PRIOR WRITTEN AUTHORIZATION OF HARSCO TRACK TECHNOLOGIES

IMPLIED TOLERANCES
ALL DIMENSIONS ARE IN INCHES TOLERANCES UNLESS OTHERWISE SPECIFIED

	INCH (PLUS DECIMALS)				METRIC (PLUS DECIMALS)		
DECIMAL	ANGULAR DEGREE	ANGULAR MINUTE	ANGULAR SECOND	DECIMAL	ANGULAR DEGREE	ANGULAR MINUTE	ANGULAR SECOND
0	0	00	000	0	0.0	0	0.0
0	24	04	008	1.0	0.0	1.0	2.0
0	1	09	010	1	0.0	1.5	3.0

UNLESS OTHERWISE SPECIFIED ALL MACHINED SURFACES WILL HAVE A SURFACE FINISH OF 125 MICRO INCHES AND A CHANGE OF 30 DEGREES WITHIN 25

THIRD ANGLE PROJECTION

CHANGES TO THIS DRAWING SHALL BE MADE TO THE LATEST APPROVED VERSION OF THIS DOCUMENT

CHANGE	R/L	REVISION	DATE
100691	A	RELEASE	8-15-06
000780	B	REMOVED WIRES #42 & #43 FROM CL 530 WIRES NS_RR	6-12-08

Description: JUNC BOX WIRING DIAG, NS

Drawing Number: ----------

Model: TR10, NS

Drawn: hhill 8-15-06

Weight: Date: Engr. Appr. DES Mfg. Appr. APD

File: DOCUMENT ONLY

HTT
Harsco Track Technologies
Harsco
Columbia, SC

Part Number: 4012342 Size: D Sheet: 1 of 1

Plotted by hhill on 9:14:2006 4012342.dft

SECTION L-5

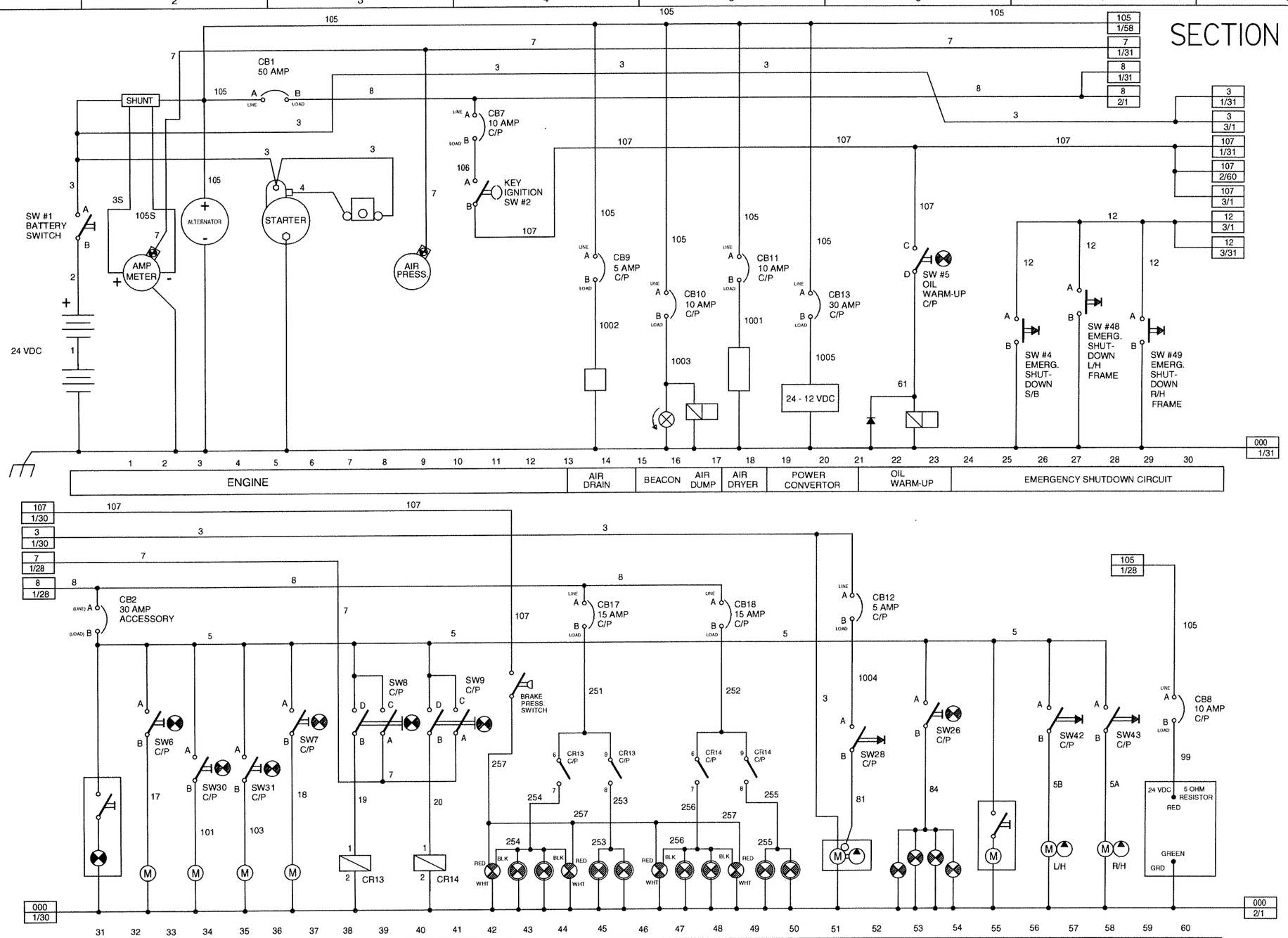

SOLID EDGE DRAWING

CONFIDENTIAL

● COPYRIGHT 2001 HARSCO TRACK TECHNOLOGIES. THIS DRAWING OR DOCUMENT IS THE PROPERTY OF HARSCO TRACK TECHNOLOGIES AND EMBODIES CONFIDENTIAL INFORMATION, TRADE SECRET INFORMATION, AND/OR KNOW-HOW THAT IS THE PROPERTY OF HARSCO TRACK TECHNOLOGIES. BY ACCEPTING THIS DRAWING OR DOCUMENT, THE RECIPIENT AGREES (1) NOT TO PROVIDE, OR OTHERWISE MAKE AVAILABLE, THE DRAWING OR DOCUMENT, OR ANY INFORMATION OR KNOW-HOW EMBODIED THEREIN, TO ANY THIRD PARTY AND (2) NOT TO REPRODUCE OR USE THE DRAWING OR DOCUMENT TO MANUFACTURE ANY APPARATUS OR DEVICE, WITHOUT THE PRIOR WRITTEN AUTHORIZATION OF HARSCO TRACK TECHNOLOGIES.

IMPLIED TOLERANCES

ALL DIMENSIONS ARE IN INCHES - TOLERANCE UNLESS OTHERWISE SPECIFIED

NOMINAL SIZE RANGE OVER	TO	INCH PLUS OR MINUS 2 PLACE DECIMAL	3 PLACE DECIMAL	NOMINAL SIZE RANGE OVER	TO	METRIC PLUS OR MINUS 1 PLACE DECIMAL	2 PLACE DECIMAL
0	6	.03	.005	0	150	.8	.13
6	24	.04	.008	150	600	1.0	.20
24		.06	.010	-	600	1.5	.25

UNLESS OTHERWISE SPECIFIED ALL MACHINED SURFACES WILL HAVE:
A SURFACE FINISH OF 125 MICROINCHES
ANGULAR TOLERANCE OF ± .50°
CONCENTRICITY WITHIN .010

THIRD ANGLE PROJECTION

UNLESS OTHERWISE SPECIFIED ALL WELDS SHOULD ADHERE TO THE LATEST HTT WELDING SPECIFICATION 101

CHANGE	R/L	REVISION	DATE
100691	A	RELEASE	8-3-06
100780	B	NO CHANGE	

Description: ELECTRICAL SCHEMATIC

Drawing Number: ----------

Machine Type: TR10, NS

Model

Drawn: hhill — Date Drawn: 8-3-06

Weight — Scale: — APVD Desg: DES — APVD ChEng: APD

Mat'l: DOCUMENT ONLY

HTT
Harsco Track Technologies
Harsco
Columbia, SC

Part Number: 4012283 — Size: C — Sheet: 1 of 3

Plotted by hhill on 9/14/2006 4012283.dft

SECTION L-5

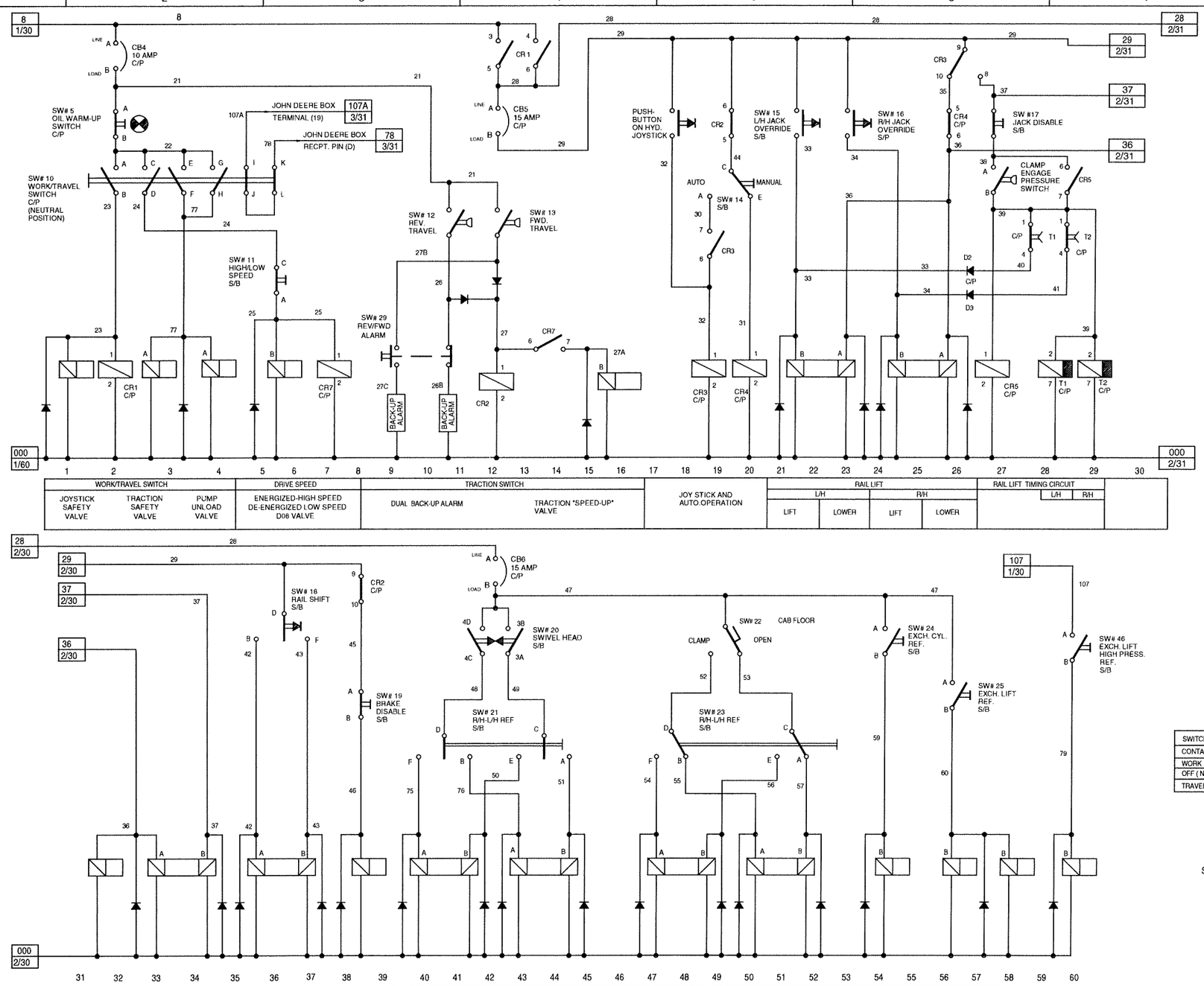

WORK/TRAVEL SWITCH			DRIVE SPEED	TRACTION SWITCH		JOY STICK AND AUTO.OPERATION	RAIL LIFT				RAIL LIFT TIMING CIRCUIT	
							L/H		R/H		L/H	R/H
JOYSTICK SAFETY VALVE	TRACTION SAFETY VALVE	PUMP UNLOAD VALVE	ENERGIZED-HIGH SPEED DE-ENERGIZED LOW SPEED D08 VALVE	DUAL BACK-UP ALARM	TRACTION "SPEED-UP" VALVE		LIFT	LOWER	LIFT	LOWER		

RAIL CLAMPS			RAIL LOCK-OUT	INDEX BRAKES	SWIVEL HEAD		TIE CLAMP				EXCHANGER UNIT CONTROL		
					LEFT HAND	RIGHT HAND	LEFT HAND		RIGHT HAND		EXCH. CYL.	EXCH. LIFT	LIFT PRESS.
FLOAT	RELEASE	CLAMP	ENERGIZED-FLOAT DE-ENERGIZED LOCKED	AIR SOLENOID VALVE	ENERGIZE A-JAW GOES IN ENERGIZE B-JAW GOES OUT		CLAMP	RELEASE	CLAMP	RELEASE	DE-ENERGIZED FOR L/H OPERATION ENERGIZED FOR R/H OPERATION		ENERGIZED FOR HIGH PRESSURE

SWITCH # 10	WORK-TRAVEL SW.					
CONTACTS	A-B	C-D	E-F	G-H	I-J	K-L
WORK	X	O	X	O	O	X
OFF (NEUTRAL)	O	O	O	O	X	X
TRAVEL	O	X	O	X	X	O

C/P = CONTROL PANEL
S/B = SWIVEL HEAD CONTROL BOX

SOLID EDGE DRAWING

CONFIDENTIAL

© COPYRIGHT 2001 HARSCO TRACK TECHNOLOGIES. THIS DRAWING OR DOCUMENT IS THE PROPERTY OF HARSCO TRACK TECHNOLOGIES AND EMBODIES CONFIDENTIAL INFORMATION, TRADE SECRET INFORMATION, AND/OR KNOW-HOW THAT IS THE PROPERTY OF HARSCO TRACK TECHNOLOGIES. BY ACCEPTING THIS DRAWING OR DOCUMENT, THE RECIPIENT AGREES (1) NOT TO PROVIDE, OR OTHERWISE MAKE AVAILABLE, THE DRAWING OR DOCUMENT, OR ANY INFORMATION OR KNOW-HOW EMBODIED THEREIN, TO ANY THIRD PARTY AND (2) NOT TO REPRODUCE OR USE THE DRAWING OR DOCUMENT TO MANUFACTURE ANY APPARATUS OR DEVICE, WITHOUT THE PRIOR WRITTEN AUTHORIZATION OF HARSCO TRACK TECHNOLOGIES.

IMPLIED TOLERANCES

ALL DIMENSIONS ARE IN INCHES - TOLERANCE UNLESS OTHERWISE SPECIFIED

NOMINAL SIZE RANGE		INCH PLUS OR MINUS		NOMINAL SIZE RANGE		METRIC PLUS OR MINUS	
OVER	TO	2 PLACE DECIMAL	3 PLACE DECIMAL	OVER	TO	1 PLACE DECIMAL	2 PLACE DECIMAL
0	6	.03	.005	0	150	.8	.13
6	24	.04	.008	150	600	1.0	.20
24	-	.06	.010	-	600	1.5	.25

UNLESS OTHERWISE SPECIFIED ALL MACHINED SURFACES WILL HAVE:
A SURFACE FINISH OF 125 MICROINCHES
ANGULAR TOLERANCE OF ± 50'
CONCENTRICITY WITHIN .010

THIRD ANGLE PROJECTION

UNLESS OTHERWISE SPECIFIED ALL WELDS SHOULD ADHERE TO THE LATEST HTT WELDING SPECIFICATION 101

CHANGE	R/L	REVISION	DATE
100691	A	RELEASE	8-3-06
100780	B	REMOVED FLOAT DIODE JUMPERS FROM WIRES 36 & 37. HH/DES/JBR	9-12-06

Description: ELECTRICAL SCHEMATIC

Drawing Number: ----------

Machine Type: TR10, NS

Model

Drawn: hhill — Date Drawn: 8-3-06

Weight — Scale:

APVD Dsng: DES — APVD Chk'ng: APD

Mat'l: DOCUMENT ONLY

HTT
Harsco Track Technologies
Harsco
Columbia, SC

Part Number: 4012283 — Size: C — Sheet: 2 of 3

Plotted by hhill on 9/14/2006 4012283.dft

SECTION L-5

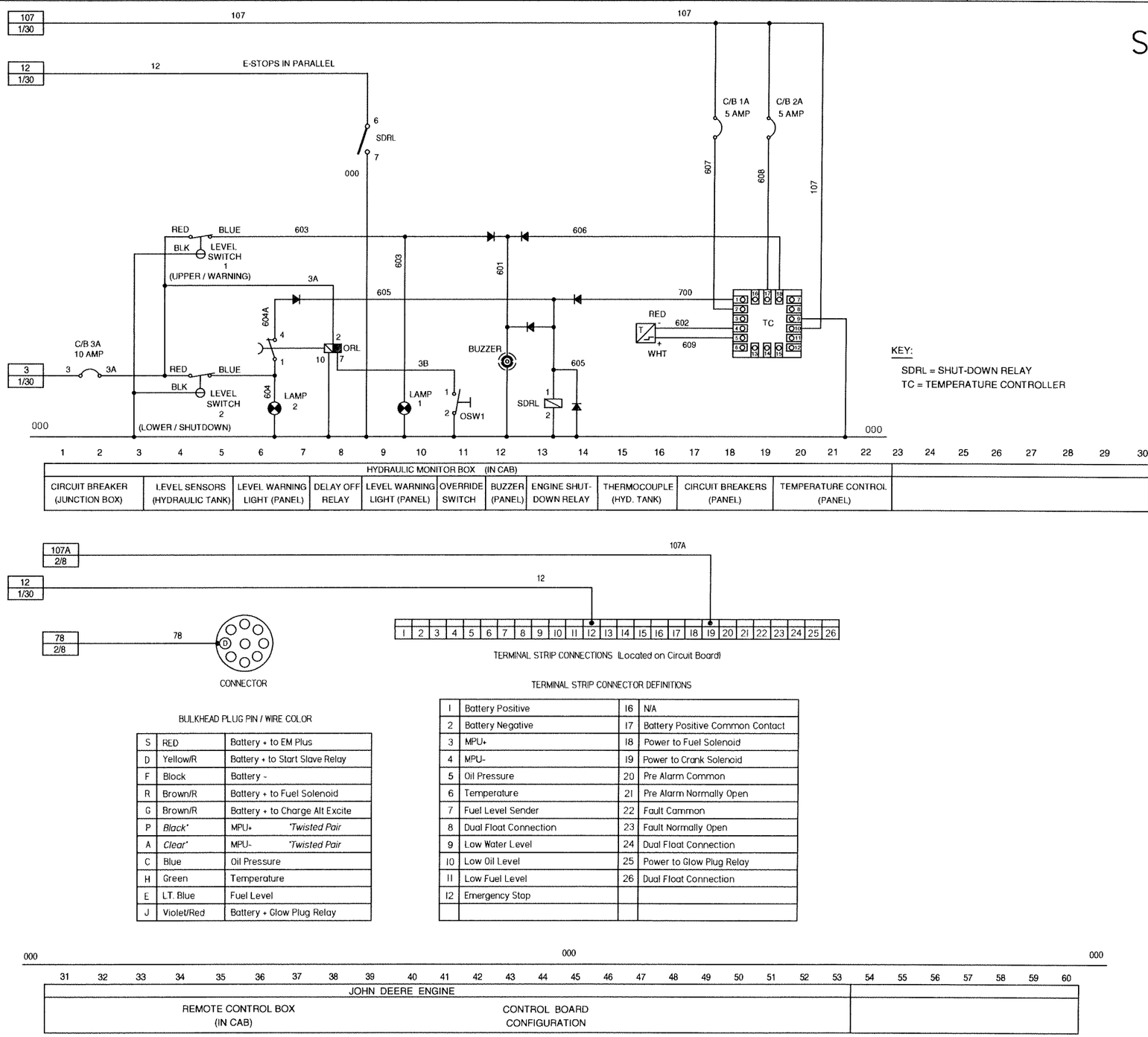

BULKHEAD PLUG PIN / WIRE COLOR

S	RED	Battery + to EM Plus
D	Yellow/R	Battery + to Start Slave Relay
F	Black	Battery -
R	Brown/R	Battery + to Fuel Solenoid
G	Brown/R	Battery + to Charge Alt Excite
P	*Black**	MPU+ *Twisted Pair
A	*Clear**	MPU- *Twisted Pair
C	Blue	Oil Pressure
H	Green	Temperature
E	LT. Blue	Fuel Level
J	Violet/Red	Battery + Glow Plug Relay

TERMINAL STRIP CONNECTOR DEFINITIONS

1	Battery Positive	16	N/A
2	Battery Negative	17	Battery Positive Common Contact
3	MPU+	18	Power to Fuel Solenoid
4	MPU-	19	Power to Crank Solenoid
5	Oil Pressure	20	Pre Alarm Common
6	Temperature	21	Pre Alarm Normally Open
7	Fuel Level Sender	22	Fault Cammon
8	Dual Float Connection	23	Fault Normally Open
9	Low Water Level	24	Dual Float Connection
10	Low Oil Level	25	Power to Glow Plug Relay
11	Low Fuel Level	26	Dual Float Connection
12	Emergency Stop		

SOLID EDGE DRAWING

CONFIDENTIAL

© COPYRIGHT 2001 HARSCO TRACK TECHNOLOGIES. THIS DRAWING OR DOCUMENT IS THE PROPERTY OF HARSCO TRACK TECHNOLOGIES AND EMBODIES CONFIDENTIAL INFORMATION, TRADE SECRET INFORMATION, AND/OR KNOW-HOW THAT IS THE PROPERTY OF HARSCO TRACK TECHNOLOGIES. BY ACCEPTING THIS DRAWING OR DOCUMENT, THE RECIPIENT AGREES (1) NOT TO PROVIDE, OR OTHERWISE MAKE AVAILABLE, THE DRAWING OR DOCUMENT, OR ANY INFORMATION OR KNOW-HOW EMBODIED THEREIN, TO ANY THIRD PARTY AND (2) NOT TO REPRODUCE OR USE THE DRAWING OR DOCUMENT TO MANUFACTURE ANY APPARATUS OR DEVICE, WITHOUT THE PRIOR WRITTEN AUTHORIZATION OF HARSCO TRACK TECHNOLOGIES.

IMPLIED TOLERANCES

ALL DIMENSIONS ARE IN INCHES - TOLERANCE UNLESS OTHERWISE SPECIFIED

NOMINAL SIZE RANGE		INCH PLUS OR MINUS		NOMINAL SIZE RANGE		METRIC PLUS OR MINUS	
OVER	TO	2 PLACE DECIMAL	3 PLACE DECIMAL	OVER	TO	1 PLACE DECIMAL	2 PLACE DECIMAL
0	6	.03	.005	0	150	.8	.13
6	24	.04	.008	150	600	1.0	.20
24	-	.06	.010	-	600	1.5	.25

UNLESS OTHERWISE SPECIFIED ALL MACHINED SURFACES WILL HAVE:
A SURFACE FINISH OF 125 MICROINCHES
ANGULAR TOLERANCE OF ± 30'
CONCENTRICITY WITHIN .010

THIRD ANGLE PROJECTION

UNLESS OTHERWISE SPECIFIED ALL WELDS SHOULD ADHERE TO THE LATEST NTT WELDING SPECIFICATION 101

CHANGE	R/L	REVISION	DATE
100691	A	RELEASE	8-3-06
100780	B	NO CHANGE	

Description: ELECTRICAL SCHEMATIC

Drawing Number: ----------

Machine Type: TR10, NS

Model:

Drawn: hhill — Date Drawn: 8-3-06

Weight: — Scale:

APVD Dsg: DES — APVD ChEng: APD

Mat'l: DOCUMENT ONLY

HTT Harsco Track Technologies
Harsco
Columbia, SC

Part Number: 4012283 — Size: C — Sheet: 3 of 3

Plotted by hhill on 9/14/2006 4012283.dft

SECTION LO

ELECTRICAL COMPONENTS OPTIONS

PARTS LIST

ITEM NO	PART NUMBER	DESCRIPTION	QUANTITY
1	A2197Y05	LAMP ASSY	4
2	A2197Y09	MARINE SPOT LIGHT ASSY	4
3	4009774	LAMP, LED (4")	4
4	4009775	PIGTAIL, PLUG-IN	4
5	172901	GROMMET (4")	4
6	172903	BRACKET (4")	4
7	A9297Y03	WIRE, #16 AWG (FT)	175
8	L40971	3/4" STR STRAIN RELIEF	2
9	L425348	STOP LIGHT SWITCH	1
10	D6805Y01	BRAKE LIGHT SW COVER	1
11	L411401	1/2 MP - 1/4 FP RED.	1
12	L41207	ELBOW 90° 1/4-MP/1/4-FP	1
13	F001099	5/16-18 X 1" HHDCPSCR	16
14	F018615	5/16 SAE FLAT WSHR	32
15	F014476	5/16-18 ESNA NUT	16
16	0-3105015-0-02	THERMAL CIRCUIT BREAKER	2
17	A6444Y01	RELAY AROMAT	2
18	A6444Y02	RELAY, MOUNT	2
19	L422904	UNIVERSAL BRKT.	8
20	4009857	SUPPORT, LAMP	4

ASSEMBLY IDENTIFIER

DWG NO: A7638WAG

SHEET: 1

CONT ON: -

DESCRIPTION (24): LIGHTING KIT, TRAVEL

DRAWN: HH

DATE: 8-1-05

CHECKED: DES

DATE: 8-1-05

APP: APD

DATE: 8-1-05

APP:

DATE:

NS TR10 2005

ASSEMBLY DESCRIPTION

ER

DR

CK

APP

MF

REVISIONS

NO	ER	DESCRIPTION	DR	CK	APP	MF
A	13144.3	NEW RELEASE	HH			
B	13144.4	ITEMS 13, 14 & 15 QTY WERE 8, 16 & 8. ADDED ITEMS 16 THRU 20. ADDED DWG. SHT-1. 8-15-05	HH	DES	APD	
C	13144.8	ITEM 11 QTY WAS 1. ITEM 12 WAS 0-3304112-0-01 QTY 1. 10-20-05	HH	DES	APD	
D	100151	ITEMS 9, 11 & 12 QTY WAS 2. 12-16-05	HH	DES	APD	

SHEET: 1

CONT ON: -

LAST ECR: 10015

1

CHECKED: dvan

DATE: 11-Jan-06

DWG NO: A7638WAG

Fairmont Tamper™
2401 Edmund Road-Box 20
Cayce-West Columbia,
South Carolina 29171-0020
(803) 622-9160

ENG.DWG.NO.
A7638WAG

REVISIONS							
NO	ER	DESCRIPTION	ZONE	DR	CK	APP	MF
B	13144.4	RELEASED DRAWING SHEET 1.		HH			
C	13144.8	PICTORIAL UPDATE TO ITEMS 11, 12 & 9. 10-20-05	A3, A4	HH	DES	APD	
D	100151	CHG BRAKE CIRCUIT TO ONE PRESS. SW AND ALL ON WIRE #257.	E2, G2	HH	DES	APD	12-16-05

SECTION LO-0900C

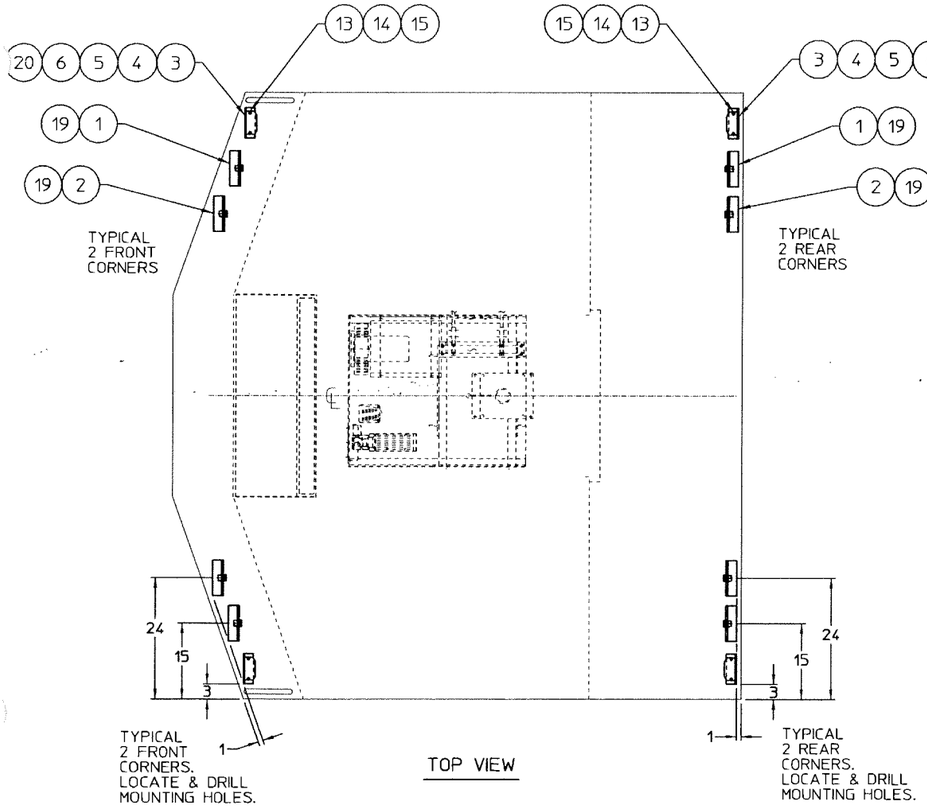

TOP VIEW

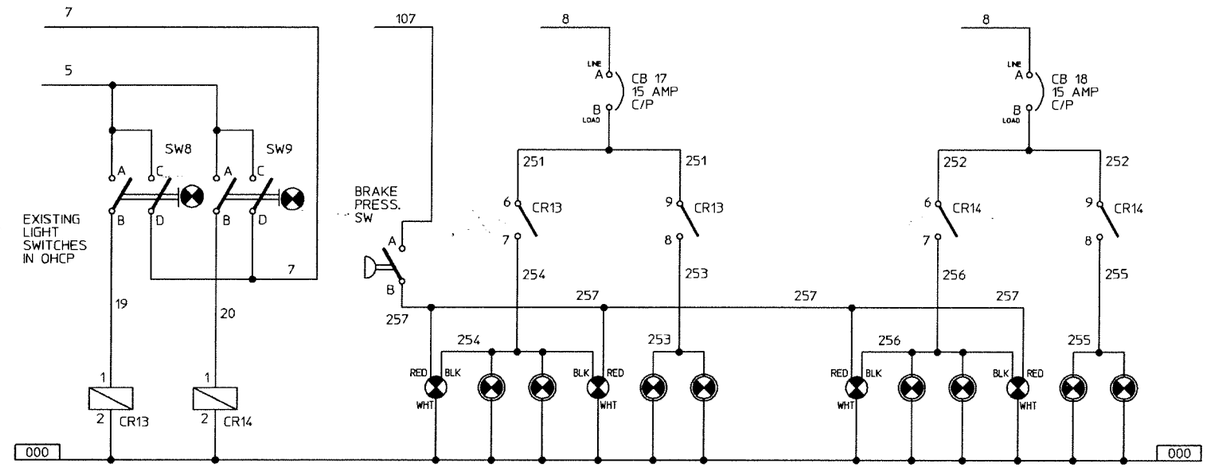

DRIVE LIGHTS					FRONT DRIVE LIGHTS / REAR TAIL LIGHTS					REAR DRIVE LIGHTS / FRONT TAIL LIGHTS			
FRONT		REAR			REAR TAIL/BRAKE LIGHT	FRONT DRIVE LIGHTS	REAR TAIL/BRAKE LIGHT	FRONT SPOT LIGHTS		FRONT TAIL/BRAKE LIGHT	REAR DRIVE LIGHTS	FRONT TAIL/BRAKE LIGHT	REAR SPOT LIGHTS
DRIVE	MARKER	DRIVE	MARKER										

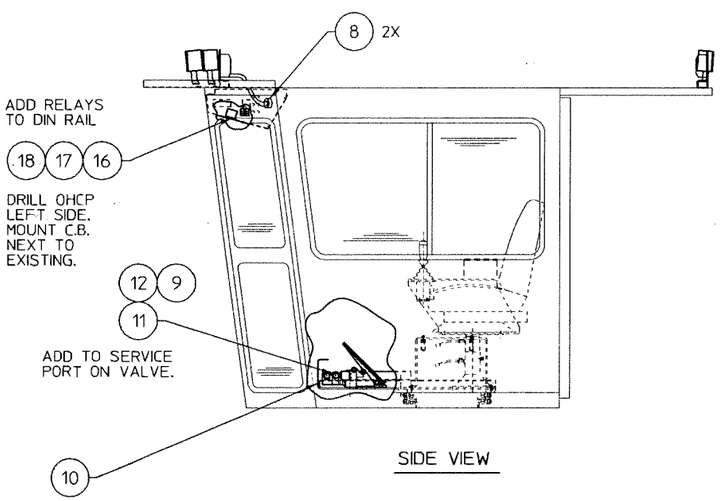

SIDE VIEW

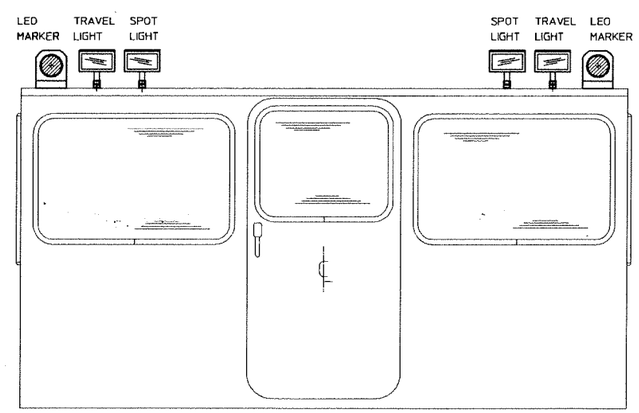

REAR VIEW

NOTES:

1. INSTALL PRESSURE SWITCH ON FOOT BRAKE VALVE.
2. INSTALL CIRCUIT BREAKERS AND RELAYS IN OHCP.
3. MOUNT LIGHTS ON ROOF SPACED AS SHOWN.
4. WIRE ACCORDING TO SCHEMATIC.
5. RUN A 16/4 SO CABLE FROM PRESSURE SWITCHES TO SWIVEL HEAD BOX. USING SPARES IN CABLES, ROUTE TO JUNCTION BOX ON MVM AND THEN TO OHCP. RUN 16 GA. WIRE TO LIGHTS ON CAB ROOF.

W-ASSY X15

FIG NO.	ITEM NO.	PART NUMBER	DESCRIPTION AND MATERIAL SIZE (REF.ONLY)	QTY
		SEE	SEPARATE PARTS LIST	

IMPLIED TOLERANCES
ALL DIMENSIONS ARE IN INCHES-TOLERANCE UNLESS OTHERWISE SPECIFIED

NOMINAL SIZE RANGE		PLUS OR MINUS			NOMINAL SIZE RANGE		PLUS OR MINUS		
OVER	TO	FRACTION	2 PLACE DECIMAL	3 PLACE DECIMAL	OVER	TO	FRACTION	2 PLACE DECIMAL	3 PLACE DECIMAL
-	1	1/64	.01	.003	6	24	3/64	.03	.008
1	6	1/32	.02	.005	24	-	1/16	.05	.010

ANGULAR DIMENSIONS PLUS OR MINUS 1 DEGREE
ALL MACHINED SURFACES TO HAVE A SURFACE FINISH OF 125 MICRONCHES UNLESS OTHERWISE SPECIFIED.

WELDING SPECIFICATION
UNLESS OTHERWISE SPECIFIED ALL WELDS SHOULD ADHERE TO FAIRMONT TAMPER WELDING SPECIFICATION NO. 101

WEIGHT lbs.
3rd ANGLE PROJECTION
DO NOT SCALE
SHEET 1 CONT. – ON –

DESCRIPTION (24): LIGHTING KIT, TRAVEL
MACHINE TYPE: TR10

DRAWN	HH	DATE 8-15-05
CHECKED	DES	DATE 8-15-05
APP-ENG	APD	DATE 8-15-05
APP-MFG		DATE
LAST ECR.	10015 1	CHECKED dvan DATE 11-Jan-06

Fairmont Tamper™
2401 Edmund Road-Box 20
Cayce-West Columbia,
South Carolina 29171-0020
(803) 822-9160

ENG.DWG.NO. A7638WAG

THIS DOCUMENT CONTAINS PROPRIETARY INFORMATION AND SUCH INFORMATION MAY NOT BE DISCLOSED TO OTHERS FOR ANY PURPOSE OR USED FOR MANUFACTURING PURPOSES WITHOUT THE WRITTEN PERMISSION OF FAIRMONT TAMPER.

WORK LIGHT ADDITION

SECTION LO-0901 DWG.NO. A7656WAA

ITEM	DESCRIPTION	PART NUMBER		QTY
001	UNIVERSAL BRACKET	L422904		4
002	TOGGLE CIRCUIT BREAKER	0-3105013-0-02		1
003	TERM LUG EYE	L422501		6
004	QUICK CONNECT LUG	L422502		6
005	#16 AWG WIRE	A9297Y03	(FT)	36
006	1/4 WIRE LOOM	L421496	(FT)	30
007	TIE MINIATURE	L420491		20
008	TERMINAL LUG, PUSH-ON MALE	0-3250001-0-34		4
009	TERMINAL LUG, PUSH-ON FEMALE	0-3250001-0-35		4
011	3/8-16 X 3/4 WELD STUD	A0071063		4
012	3/8-16 LOCK NUT	L40387		4
013	FLOOD LAMP ASSY	A2197Y06		4

WORK LIGHT ADDITION
DWG NO A7656WAA
SECTION LO-0901

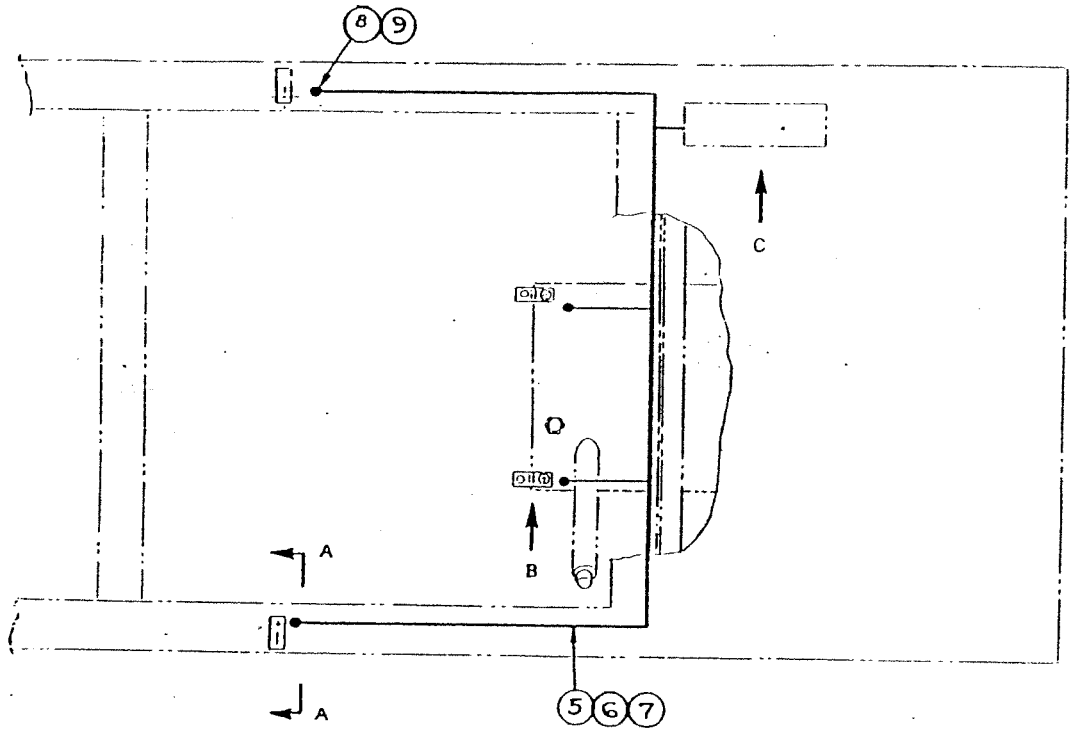

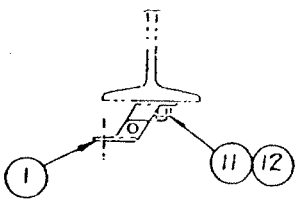

SECTION A-A

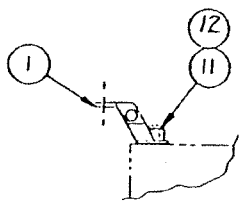

VIEW B

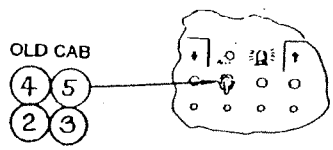

VIEW C
DETAIL OF MAIN CONTROL PANEL

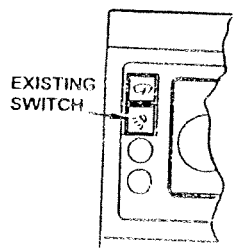

NEW WIDE CAB

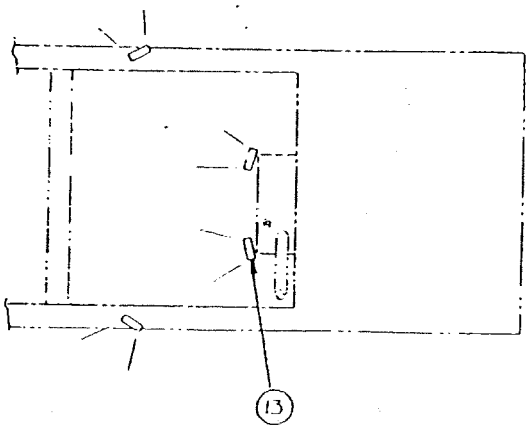

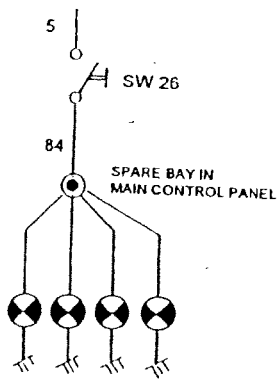

ELECTRICAL SCHEMATIC

HARSCO
RAIL

CATALOG NO. 0-3002579-0-0 Printed In U.S.A. ISSUED 06 - 2006

© 2006 HARSCO RAIL, HARSCO CORPORATION