HARSCO RAIL

www.harscorail.com

MARK IV HD J2
PRODUCTION / SWITCH TAMPER

WITH CUMMINS TIER III ENGINE - HYDRAULIC DRIVE - JUPITER II

OPERATION AND SERVICE MANUAL

JUPITER On Board

ISSUED 6 - 2011
REVISED 2 - 2012

BULLETIN 5007763
REVISION B

© 2012 HARSCO CORPORATION, ALL RIGHTS RESERVED

CAUTION

- **THIS MANUAL CONTAINS VITAL INFORMATION FOR THE SAFE USE AND EFFICIENT OPERATION OF THIS MACHINE. CAREFULLY READ THIS OPERATOR'S MANUAL BEFORE USING THE MACHINE. FAILURE TO ADHERE TO THE INSTRUCTIONS COULD RESULT IN BODILY INJURY AND/OR PROPERTY DAMAGE.**

HARSCO RAIL is the brand name and trademark of products manufactured by Harsco Rail, Harsco Corporation.

When this manual is received, record the machine serial number, engine serial number and all other information from the serial number tags in the spaces provided for future reference, in case the serial number tags ever become unreadable.

A MANUAL MUST REMAIN WITH THE MACHINE. Additional or replacement manuals may be obtained by calling or writing Harsco Rail, Harsco Corporation.

All information, illustrations and specifications in this manual are based on the latest information available at the time of publication. Harsco Rail, Harsco Corporation reserves the right to make changes at any time without notice.

FACILITY LOCATIONS

Harsco Rail
415 North Main Street
Fairmont, MN
56031-1837
Tel: (507) 235-3361
Fax: (507) 235-7370

Harsco Rail
2401 Edmund Road, Box 20
Cayce-West Columbia, SC
29171-0020
Tel: (803) 822-9160
Fax: (803) 822-7471

Harsco Rail
200 South Jackson Road
Ludington, MI
49431
Tel: (231) 843-3431
Fax: (231) 843-1644

Harsco Rail
Giltway, Giltbrook
Nottingham, NG16 2GQ
England
Tel: 0115 938 7000
Fax: 0115 938 7001

Harsco Rail
4 Strathwyn Street, PO Box 5287
Brendale, Queensland 4500
Australia
Tel: 61 7 205 6500
Fax: 61 7 205 7369

Printed in U.S.A.

CALIFORNIA

PROPOSITION 65 WARNING

DIESEL ENGINE EXHAUST AND SOME OF ITS CONSTITUENTS ARE KNOWN TO THE STATE OF CALIFORNIA TO CAUSE CANCER, BIRTH DEFECTS, AND OTHER REPRODUCTIVE HARM.

EMISSION CONTROL INFORMATION

HARSCO

MANUFACTURE DATE:

CONTACT: Harsco Rail
803-822-9160

THIS EQUIPMENT HAS AN ENGINE THAT MEETS U.S. EPA EMISSION STANDARDS UNDER 40 CFR 1039.625

PREFACE

Conventions Used In This Manual:

Italics *Indicates references to other manuals, such as the Parts Manual.*

Bold Indicates a control lever, pushbutton or toggle switch. Indicates button or switch..

(" ") Double quotation marks indicates a button or switch. Also indicates the title of other chapters, sections, or pages in this manual, such as "Appendix A".

The note symbol is used to indicate additional information or special conditions you need to know about concerning a procedure or the machine.

The caution symbol is used to alert you or call attention to a condition that could cause bodily injury to you or damage to the machine.

The warning symbol is used to alert you or call attention to a condition that could cause severe bodily injury to you.

How To Use This Manual:

Make sure you read "Chapter 1" and "Chapter 1.1" before you read any other chapters in this manual because it describes safety rules and safety features.

If you are NOT familiar with all of the machine components, make sure you read all of the chapters and all of the appendices before you try to operate the machine or perform maintenance or repairs on the machine.

If you are already familiar with the machine, you should read all of the chapters that apply to the type of operation you need to perform, such as the procedure for starting and setting-up the machine for work. All references to left or right are determined from the operators seat.

CHAPTER 1
GENERAL / SAFETY INFORMATION

CHAPTER 1 - GENERAL INFORMATION
TABLE OF CONTENTS

1.1 Safety . . . . . 1 - 2
1.1.1 Hazard Seriousness . . . . . 1 - 2
1.1.2 Safety Information . . . . . 1 - 3
1.2 Energy Control Procedure . . . . . 1 - 10
1.3 Description . . . . . 1 - 12
1.4 Orientation . . . . . 1 - 12
1.5 Identification . . . . . 1 - 13
1.6 Serial Numbers . . . . . 1 - 14
1.6.1 Serial Number - Machine . . . . . 1 - 14
1.6.2 Serial Number - Engine . . . . . 1 - 14
1.7 Specifications . . . . . 1 - 15
1.7.1 General . . . . . 1 - 16
1.7.2 Cab . . . . . 1 - 16
1.7.3 Performance . . . . . 1 - 16
1.7.4 Engine . . . . . 1 - 17
1.7.5 Drive Train . . . . . 1 - 17
1.7.6 Brake System . . . . . 1 - 17
1.7.7 Air System . . . . . 1 - 18
1.7.8 Hydraulic System . . . . . 1 - 18
1.7.9 Tamping System . . . . . 1 - 19
1.7.10 Clamp System . . . . . 1 - 19
1.7.11 Leveling System . . . . . 1 - 19
1.7.12 Lining System . . . . . 1 - 19
1.7.13 Frame and Suspension . . . . . 1 - 19

1.1 Safety

THIS SYMBOL MEANS: ATTENTION! BECOME ALERT! YOUR SAFETY IS INVOLVED.

SAFETY IS A CRITICAL FACTOR IN THE DESIGN OF HARSCO RAIL EQUIPMENT. THE BEST SAFETY PROGRAM STARTS WITH A SAFETY CONSCIOUS OPERATOR. THE SAFETY INFORMATION HIGHLIGHTED IN THIS BULLETIN DESCRIBES SAFE OPERATING PRACTICES FOR THE BENEFIT OF THE WORKERS WHO WILL USE OUR EQUIPMENT IN THEIR DAILY JOBS.

1.1.1 Hazard Seriousness

Signal Words: **DANGER**, **WARNING** and **CAUTION** are used to identify levels of hazard seriousness.

DANGER

DANGER - Immediate hazards which WILL result in severe bodily injury or death.

WARNING

WARNING - Hazards or unsafe practices which COULD result in severe bodily injury or death.

CAUTION

CAUTION - Hazards or unsafe practices which COULD result in minor bodily injury and/or product or property damage.

1.1 Safety

1.1.2 Safety Information

DANGER

- **STOP ENGINE WHEN FILLING FUEL TANK. DO NOT FILL FUEL TANK OR ADJUST FUEL SYSTEM NEAR AN OPEN FLAME, SPARKS OR WHEN SMOKING. FUEL FUMES ARE FLAMMABLE AND/OR EXPLOSIVE, AND IF IGNITED WILL RESULT IN SEVERE BODILY INJURY OR DEATH.**

- **STOP ENGINE WHEN CHECKING BATTERY ELECTROLYTE LEVEL. DO NOT CHECK OR FILL BATTERY ELECTROLYTE LEVEL NEAR AN OPEN FLAME, SPARKS OR WHEN SMOKING. BATTERY FUMES ARE FLAMMABLE AND/OR EXPLOSIVE, AND IF IGNITED WILL RESULT IN SEVERE BODILY INJURY OR DEATH.**

- **ALL INTERNAL COMBUSTION ENGINES GIVE OFF VARIOUS FUMES AND GASSES WHILE RUNNING. DO NOT START OR RUN ENGINE IN AN AREA WHERE THESE GASSES CAN ACCUMULATE. AVOID BREATHING THESE GASSES AS THEY CAN ENDANGER YOUR HEALTH AND LIFE, IF INHALED FOR EVEN A FEW MINUTES.**

- **IF A DERAILMENT SHOULD OCCUR WHILE THIS MACHINE IS OPERATING IN ELECTRIFIED 3RD-RAIL TERRITORY, THE MACHINE MIGHT BE IN ELECTRICAL CONTACT WITH ELECTRIFIED RAIL. DO NOT ATTEMPT TO EXIT FROM MACHINE UNTIL ELECTRICAL POWER TO 3RD-RAIL HAS BEEN TURNED OFF. FAILURE TO HEED WARNING COULD RESULT IN ELECTROCUTION.**

1.1 Safety

1.1.2 Safety Information

WARNING

- **REFER TO ENERGY CONTROL PROCEDURE TO REMOVE ALL ENERGY SOURCES FROM MACHINE BEFORE PERFORMING MAINTENANCE, OR MAKING ADJUSTMENTS OR REPAIRS TO MACHINE.**
- **ENSURE THAT MACHINE IS FULLY FUNCTIONAL BEFORE OPERATING.**
- **NO RIDERS SHALL BE ALLOWED ON THIS EQUIPMENT AT ANY TIME.**
- **UNDERSTAND MACHINE OPERATION AND BE AWARE OF ALL PINCH POINTS BEFORE OPERATING OR MAKING ADJUSTMENTS TO MACHINE.**
- **DO NOT WEAR LOOSE CLOTHING AND KEEP ALL PARTS OF BODY CLEAR OF ALL MOVING PARTS OF MACHINE.**
- **BE SURE ALL PERSONS ARE CLEAR OF MACHINE BEFORE OPERATING ANY FUNCTION.**
- **DO NOT TOUCH OR SERVICE ENGINE COMPONENTS, EXHAUST COMPONENTS, RADIATOR, PUMP DRIVE, OIL COOLER, HYDRAULIC PUMPS, MOTORS, VALVES, AIR COMPRESSOR, ETC. WHEN THEY ARE HOT. HOT SURFACES CAN CAUSE SERIOUS BURNS.**
- **ALL HOSES AND FITTINGS ON THIS MACHINE MUST COMPLY WITH SAE J1273 - RECOMMENDED PRACTICES FOR HYDRAULIC HOSE ASSEMBLIES. SEE APPENDIX C - SAE STANDARDS.**
- **DO NOT OPERATE MACHINE WITHOUT ALL SHIELDS AND MACHINE GUARDS IN PLACE. REPLACE WORN OR DAMAGED SHIELDS AND GUARDS.**
- **WHEN REMOVING AIR LINES, FITTINGS OR COMPONENTS:**
  - **ALWAYS WEAR APPROPRIATE PERSONAL SAFETY EQUIPMENT.**
  - **REFER TO ENERGY CONTROL PROCEDURE TO REMOVE ALL ENERGY SOURCES FROM MACHINE BEFORE PERFORMING MAINTENANCE, OR MAKING ADJUSTMENTS OR REPAIRS TO MACHINE.**
  - **DEPRESSURIZE AIR SYSTEM. ESCAPING AIR CAN WHIP HOSES AND EXPEL FITTINGS OR COMPONENTS AT HIGH VELOCITY.**
  - **REMOVE LINES, FITTINGS OR COMPONENTS SLOWLY TO RELEASE ANY TRAPPED PRESSURE.**
  - **NEVER EXCEED RECOMMENDED AIR PRESSURES.**
  - **NEVER LOOK INTO AIR JETS OR DIRECT THEM AT ANYONE.**

1.1 Safety

1.1.2 Safety Information

- **WHEN REMOVING HYDRAULIC LINES, FITTINGS OR COMPONENTS:**
  - **ALWAYS WEAR APPROPRIATE PERSONAL SAFETY EQUIPMENT.**
  - **REFER TO ENERGY CONTROL PROCEDURE TO REMOVE MACHINE FROM ENERGY SOURCE WHEN PERFORMING MAINTENANCE, OR MAKING ADJUSTMENTS OR REPAIRS TO MACHINE, UNLESS OTHERWISE INSTRUCTED IN THIS SERVICE MANUAL.**
  - **DEPRESSURIZE HYDRAULIC RESERVOIR AND HYDRAULIC SYSTEM. ESCAPING FLUID CAN WHIP HOSES AND EXPEL FITTINGS OR COMPONENTS AT HIGH VELOCITY.**
  - **NEVER REMOVE LINES, FITTINGS OR COMPONENTS WHEN HYDRAULIC FLUID IS HOT. HOT HYDRAULIC FLUID CAN CAUSE SERIOUS BURNS.**
  - **REMOVE LINES, FITTINGS OR COMPONENTS SLOWLY TO RELEASE ANY TRAPPED PRESSURE.**
  - **IF INJURY RESULTS FROM ESCAPING FLUID, SEE A DOCTOR AT ONCE; SERIOUS REACTION OR INFECTION MAY RESULT IF PROPER MEDICAL ATTENTION IS NOT OBTAINED IMMEDIATELY.**

- **IF CERTAIN FAULT CONDITIONS OCCUR WHILE MACHINE IS OPERATING, ENGINE MAY SUDDENLY SHUT DOWN OR BRAKES MAY SUDDENLY APPLY.**

- **WHEN A FAULT CONDITION HAS OCCURRED, DETERMINE NATURE OF PROBLEM. CORRECT PROBLEM BEFORE CONTINUING TO OPERATE MACHINE.**

- **WHEN CHECKING RADIATOR OF AN ENGINE:**
  - **ALWAYS WEAR APPROPRIATE PERSONAL SAFETY EQUIPMENT.**
  - **DO NOT REMOVE RADIATOR CAP WHEN ENGINE IS HOT. EXPLOSIVE RELEASE OF FLUIDS FROM PRESSURIZED COOLING SYSTEM CAN CAUSE SERIOUS BURNS. WAIT UNTIL ENGINE COOLS BELOW 120° F (50° C) BEFORE REMOVING RADIATOR CAP.**
  - **COVER RADIATOR FILLER CAP WITH A THICK CLOTH.**
  - **SLOWLY TURN RADIATOR FILLER CAP TO FIRST POSITION TO RELEASE PRESSURE.**
  - **AFTER PRESSURE HAS BEEN RELEASED, REMOVE RADIATOR FILLER CAP.**

1.1 Safety

1.1.2 Safety Information

WARNING

- **STARTING FLUID IN EITHER AEROSOL OR CAPSULE FORM, IS HIGHLY VOLATILE AND MUST BE STORED AWAY FROM HEAT AND DIRECT SUNLIGHT.**
- **FOLLOW INSTRUCTIONS PRINTED ON STARTING FLUID CONTAINER OR CARTON, OR IN ENGINE MANUAL.**
- **CAPSULE STARTING FLUID IS HIGHLY TOXIC AND POSSESSES ANESTHETIC PROPERTIES. USE ONLY IN WELL VENTILATED AREAS AND AVOID BREATHING VAPORS.**
- **DO NOT USE ANY TYPE OF STARTING FLUID OR CAPSULES IF GLOW PLUGS OR MANIFOLD PRE-HEATERS ARE BEING USED. EXPLOSIVE PRE-IGNITION CAN OCCUR.**
- **CRANE OR HOIST MUST BE RATED TO LIFT WEIGHT OF MACHINE.**
- **STAND CLEAR OF MACHINE WHILE LIFTING.**
- **WHEN LIFTING MACHINE, ALL PERSONNEL ASSISTING IN POSITIONING MACHINE SHOULD ALWAYS HAVE VISUAL CONTACT WITH CRANE OR HOIST OPERATOR.**
- **BRAKE ACTUATOR SPRING CHAMBERS ARE UNDER COMPRESSED SPRING FORCE. DO NOT ATTEMPT TO DISASSEMBLE BRAKE ACTUATOR.**

FAILURE TO HEED THESE WARNINGS COULD RESULT IN SEVERE BODILY INJURY.

1.1 Safety

1.1.2 Safety Information

CAUTION

- **OBSERVE AND FOLLOW ALL RAILROAD SAFETY RULES AND REGULATIONS.**
- **USE APPROPRIATE PERSONAL SAFETY EQUIPMENT SUCH AS SAFETY GOGGLES, HARD HAT, SAFETY SHOES, HEARING PROTECTION, ETC.**
- **KNOW POSITIONS AND FUNCTIONS OF ALL CONTROLS BEFORE ATTEMPTING TO OPERATE THIS MACHINE.**
- **DO NOT LET ENGINE RUN WHEN UNATTENDED.**
- **THIS MACHINE IS DESIGNED WITH YOUR SAFETY IN MIND. DO NOT DISCONNECT AND/OR ATTEMPT TO OVERRIDE SAFETY FEATURES.**
- **BE SURE ALL PERSONS ARE CLEAR OF MACHINE BEFORE ENABLING TRAVEL MODE OR WORK MODE TO ENABLE HYDRAULIC SYSTEM AT FULL SYSTEM PRESSURE.**
- **IF MACHINE IS EQUIPPED WITH A STROBE LIGHT AND RAILROAD RULES AND REGULATIONS REQUIRE ITS USE, STROBE LIGHT MUST BE ILLUMINATED WHEN OPERATING ON TRACK.**
- **TO HELP ENSURE SAFE OPERATION OF THIS MACHINE, KEEP ALL SAFETY DECALS CLEAN AND LEGIBLE. REPLACE SAFETY DECALS WHEN NECESSARY WITH NEW DECALS LISTED IN PARTS MANUAL.**
- **FIRE EXTINGUISHER CRADLE MUST BE UNLOCKED WHEN MACHINE IS OPERATING ON TRACK.**
- **TRACK AND WEATHER CONDITIONS WILL AFFECT STOPPING DISTANCE. BE ALERT TO THESE CONDITIONS AND ALLOW ADEQUATE STOPPING DISTANCE.**
- **BE ALERT FOR A SUDDEN STOP SHOULD BRAKE CIRCUIT AIR PRESSURE BE REDUCED OR LOST. EMERGENCY BRAKES MAY APPLY SUDDENLY.**
- **OPERATOR MUST LOOK IN ALL DIRECTIONS FOR PERSONS OR OBJECTS ON OR ADJACENT TO TRACK.**

1.1 Safety

1.1.2 Safety Information

- **MAKE SURE NO RED INDICATORS ARE ILLUMINATED IN OPERATOR'S AREA OR ON MACHINE. IF A RED INDICATOR IS ILLUMINATED, STOP IMMEDIATELY AND CORRECT PROBLEM.**
- **WHEN TRACK TRAVELING MACHINE, PLACE ALL MACHINE COMPONENTS (Workheads, Rail Clamps, Receiver Buggy, Shadowboard, Projector Buggy, Buggy Pusher Bars, Buggy Lift Frame, etc.) IN TRAVEL POSITION AND LOCK.**
- **ALL OPERATING ADJUSTMENTS MUST BE PROPERLY MADE TO ALLOW SAFE AND EFFICIENT OPERATION OF THIS MACHINE.**
- **NO RIDERS SHALL BE ALLOWED ON THIS MACHINE AT ANY TIME.**
- **WHEN LIFTING MACHINE, ALWAYS FOLLOW APPLICABLE RAILROAD RULES AND REGULATIONS.**
- **BALANCE OF MACHINE WHILE LIFTING CAN BE AFFECTED BY MANY VARIABLES. PLAN AHEAD TO AVOID ANY SUDDEN LOAD SHIFTS. REMOVE HEAVY, LOOSE LOADS BEFORE ATTEMPTING TO LIFT MACHINE.**
- **DO NOT TURN MACHINE ON A CURVE OR IN ANY LOCATION WHERE VISION MAY BE OBSCURED FROM ONCOMING TRAFFIC.**
- **WHEN TURNING MACHINE AT A GRADE CROSSING, ALWAYS FOLLOW APPLICABLE RAILROAD RULES AND REGULATIONS.**
- **USE A RIGID TYPE TOW BAR WITH SAFETY LOCKING COUPLERS. DO NOT USE CHAIN, WIRE ROPE, ETC.**
- **TOWING MACHINE MUST WEIGH AS MUCH OR MORE THAN MACHINE BEING TOWED.**
- **TOWING MACHINE MUST HAVE AN ADEQUATE BRAKE SYSTEM TO SAFELY DECELERATE AND STOP TOWING MACHINE AND MACHINE BEING TOWED.**

1.1 Safety

1.1.2 Safety Information

CAUTION

- **TOW MACHINE AT A SAFE SPEED TAKING INTO ACCOUNT TRACK CONDITIONS, WEATHER, VISIBILITY AND STOPPING DISTANCE.**

- **WHEN TOWING MACHINE, BOTH TRACTION / TOWING VALVES MUST BE IN TOWING POSITION. DO NOT EXCEED A MAXIMUM TOWING SPEED OF 25 MPH (40 KM/H) WHEN TOWING MACHINE.**
  - **IF RECOMMENDED TOWING PROCEDURE IS NOT FOLLOWED, DAMAGE CAN OCCUR TO PROPEL MOTORS AND/OR HYDRAULIC SYSTEM.**

- **DO NOT ATTEMPT TO MECHANICALLY RELEASE (CAGE) ACTUATOR SPRING CHAMBER IF ANY STRUCTURAL DAMAGE TO THE ACTUATOR IS EVIDENT. IF DAMAGED, REMOVE ACTUATOR AND REPLACE WITH A NEW ACTUATOR.**

- **CHOCK MACHINE WHEELS BEFORE MECHANICALLY RELEASING BRAKES**

- **NEVER LEAVE MACHINE UNATTENDED WITH BRAKES MECHANICALLY RELEASED.**

FAILURE TO HEED THESE PRECAUTIONS COULD RESULT IN BODILY INJURY AND/OR PROPERTY DAMAGE.

Note: To help ensure safe operation of this machine, keep all decals clean and legible. Replace decals when necessary with new decals, listed in the Parts Manual for this machine.

1.2 Energy Control Procedure

WARNING

- **NEVER ATTEMPT TO ACTIVATE AN ENERGY CONTROL POINT THAT HAS BEEN LOCKED OUT / TAGGED OUT.**
- **BEFORE ATTEMPTING TO ACTIVATE ANY ENERGY CONTROL POINT, EVERY LOCK-OUT DEVICE MUST BE REMOVED BY THE PERSON THAT INSTALLED IT.**

FAILURE TO HEED THESE WARNINGS COULD RESULT IN SEVERE BODILY INJURY.

Purpose:

This procedure informs appropriate personnel of the location and proper means of removal and restoration of electrical, mechanical, hydraulic and pneumatic energy for this machine. This procedure is provided to help protect personnel from the unexpected release of energy while performing maintenance, making adjustments, or dealing with emergency shutdown conditions. This procedure will be used by personnel responsible for lock-out and tag-out.

1. Use governing railway's "Lock-Out / Tag-Out" (LOTO) - Compliant procedures, along with the energy control points and procedures provided herein.
2. Before performing work on any system, use the Energy Control procedure to de-energize all systems. Then LOCK OUT AND TAG OUT all relevant energy control points.
3. Only the person that installed the lock out device may remove it, unless that person is contacted directly and gives permission / verification that it is safe to do so.
4. Any person performing work on another system controlled under another person's lock-out, must install an additional lock-out and tag-out device at the same control point.

Scope:

This procedure must comply with railroad safety rules. It is to be used in conjunction with an operator's manual when servicing or repairing the machine. Any alterations to this machine may invalidate this Energy Control Procedure and/or lockout tagout procedure.

Model: Mark IV HD	**Manufacturer:** Harsco Rail	**Issue Date:** 08/26/2011
Energy Sources:	Electrical. . . . . 24 VDC	Compressed Air X
	Hydraulic X	Mechanical. X
Stored Energy:	Raised Load. X	Coil Springs X
	Battery X	Air Tank X
	Hydraulic Pressure. X	

1.2 Energy Control Procedure

Procedure To Remove Machine From Energy Sources:

1. The person who will be doing the maintenance or adjustments must familiarize themselves with the type of energy sources for this machine and understand fully the hazards of the energy.
2. Stop machine and set parking brake, located on left arm console.
3. Lock Workheads, Clamp Frame, Shadowboard Buggy, Receiver Buggy, and Projector Buggy with folding reference system in the secured travel position unless one or more of these work components is the area to be worked on and the anticipated work will require the work component to be resting on the rail or ballast. Any work component not locked in travel position should be lowered until its full weight is on the rail or ballast. If Projector Buggy is deployed, every stored folding reference buggy must be securely locked in the buggy lift frame.
4. Return throttle to idle position. Throttle is located on right arm seat cushion.
5. Stop engine. Ignition switch is located on Engine Control Panel.
6. Turn battery master switch to "OFF" position. Switch is located inside the forward toolbox on left side of machine.
7. Switch circuit breakers "OFF" in PDB breaker Box. Box is located near battery switch.
8. Drain air systems by pulling air reservoir drain valve control ring until all air pressure has escaped. Air reservoir drain is located on left side near the front wheel.
9. Verify that all energy sources are de-energized by operating the controls to make sure the equipment will not operate (attempt to start engine).

Procedure To Restore Machine To Service:

1. Check the machine and surrounding area to make sure all tools, etc. have been removed from machine.
2. Verify that everyone is clear of the machine while it is being restored to power.
3. Verify that all controls are in neutral or off position.
4. Turn battery master switch to "ON" position.
5. Switch circuit breakers to "ON" in PDB Breaker Box.
6. Start engine.
7. Verify that all energy sources are energized by observing information on computer screen.
8. Test all functions of the machine which were affected by the repairs.

1.3 Description

The Mark IV HD Tamper is used for production and switch tamping, and transit system work. The HD (Hydraulic Drive) model incorporates a direct drive two speed gearbox on both the front and rear axles that provide full time four wheel drive in either the Travel or Work Mode.

The machine is equipped with Jupiter II control system and System V software. Ergonomic operator control is provided through arm panel keypads, joysticks, a USB keyboard and a 17 inch touch screen color monitor used as the graphical interface.

The Jupiter II Control System utilizes a Control Area Network (CAN) communications scheme to read and control Input / Output (I/O) modules distributed remotely around the machine. These modules are placed strategically to be in close proximity to the devices with which they interact.

The advanced System V control system delivers accurate, repeatable results and effective operator interface for computer controlled automatic ramping, super-elevation, zeroing of references, and continuous cross level monitoring.

The four heavy-duty vibrator assemblies are powered by hydraulic motors designed to allow one workhead to tamp one rail independently of the other. Tamping of unevenly spaced or skewed ties is simplified by manually adjustable tamping tool position. Tamping tools for individual workheads can be positioned closer together (squeezed in) prior to the work cycle, allowing insertion in areas of tight tie spacing. Workhead depth can be varied from within the cab using operator-defined settings on the pop-out workhead panel. This panel includes current workhead position according to the workhead transducer along with the upper (standby) position and lower (squeeze) position for each workhead. This increases productivity by automatically returning the workheads to a lower standby position when indexing during production runs (production mode), and to a higher position when moving workheads through a switch (switch mode).

A fully enclosed, sound suppressed and insulated cab is mounted on air bags that is accessible from either side of the machine via a rear platform equipped with conventional stair type steps. The air bag feature provides an excellent ride comfort for the operator and added protection for electronic components. The operator has an unobstructed view of the work area and all machine operation and safety lock controls are within comfortable reach. Front and rear wipers and a dual tone air horn are included.

1.4 Orientation - See Figures 1-1 and 1-2

Front / rear and left / right are determined from the operator's seat in the cab. The lining / surfacing buggy is located on the front of the machine and the cab / operator's seat is located on the rear of the machine. The jacking / tamping components are located on both the left and right sides of the machine.

1.5 Identification

FIGURE 1-1
MARK IV HD TAMPER LEFT SIDE

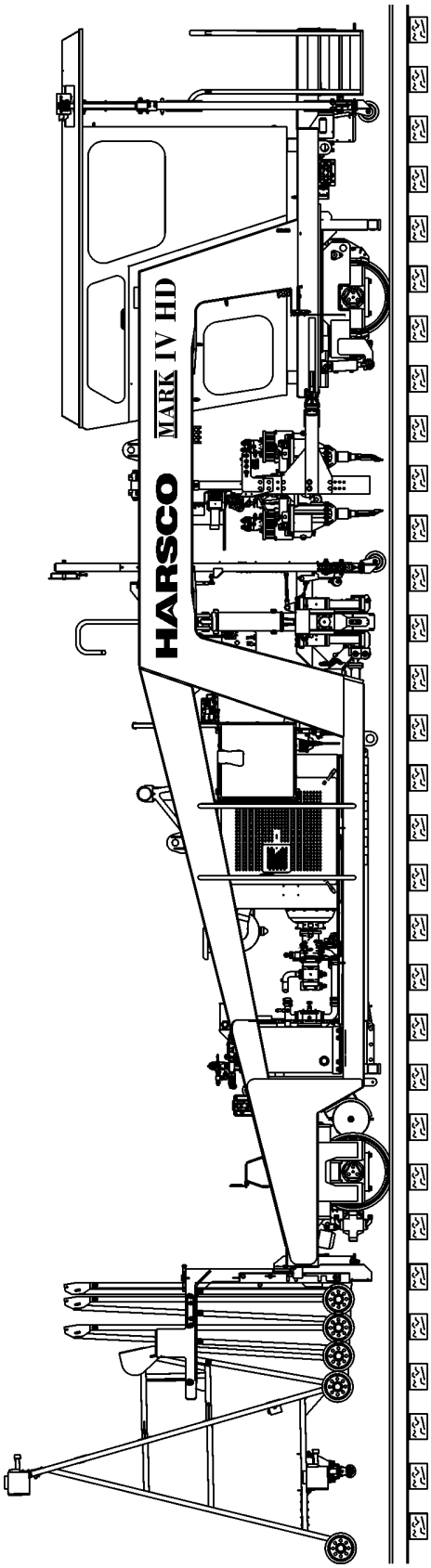

FIGURE 1-2
MARK IV HD TAMPER RIGHT SIDE

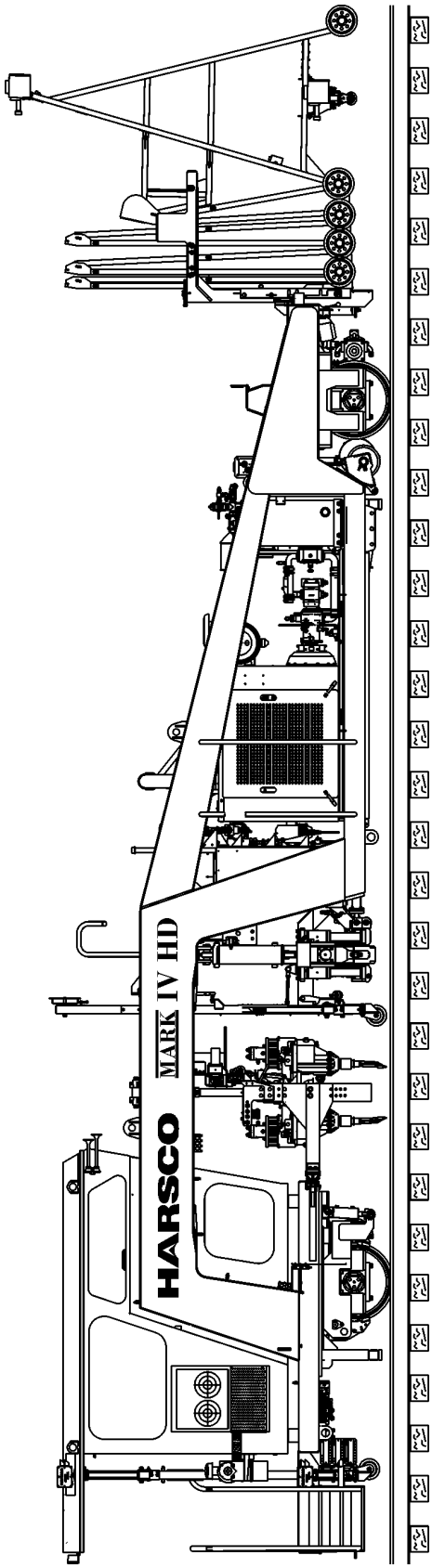

1.6 Serial Numbers

1.6.1 Serial Number - Machine

Record the serial number and all other information from the serial number tag on the machine in the spaces provided in Figure 1-3. Always provide the serial number when calling or writing the factory about the machine. The serial number tag is located on the left side of the machine frame above the left rear drive wheel on the cab.

Spaces marked "Model No." - "Serial No." and "Chassis No." will always have numbers and/or letters shown.

FIGURE 1-3
MACHINE SERIAL NUMBER TAG

1.6.2 Serial Number - Engine

Record the serial number of the engine in the spaces provided below. The engine serial number tag is located on the engine. See the Engine Manual, for the location of the serial number tag.

Engine Manufacturer: "_____"

Engine Model Number: "_____"

Engine Serial Number: "_____"

1.7 Specifications

FIGURE 1-4
GENERAL SPECIFICATIONS

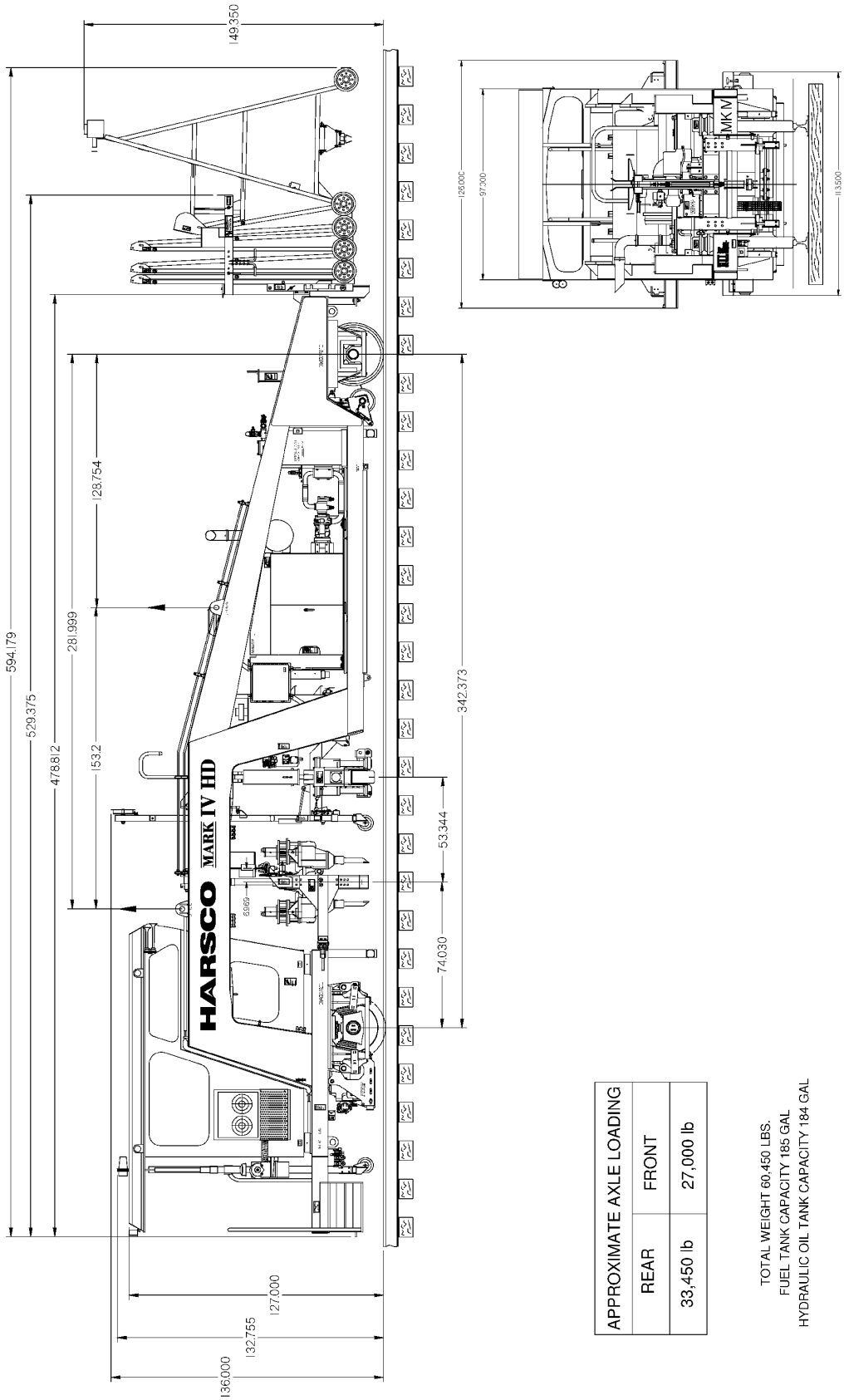

APPROXIMATE AXLE LOADING	
REAR	FRONT
33,450 lb	27,000 lb

TOTAL WEIGHT 60,450 LBS.
FUEL TANK CAPACITY 185 GAL
HYDRAULIC OIL TANK CAPACITY 184 GAL

1.7 Specifications

1.7.1 General - See Figure 1-4

Length - Basic Machine	39.9 ft	(12.16 m)
Length - with Projector Buggy Stored	49.5 ft	(15.00 m)
Length - Working	110.0 ft	(33.5 m)
Width - Travel	10.5 ft	(3.2 m)
Width - Working	13.3 ft	(4.0 m)
Height - Shipping - to Top of Shadowboard with Receivers and Projector Buggy Removed	10.5 ft	(3.2 m)
Height - Travel	12.5 ft	(3.8 m)
Weight	60,500 lb	(22,581.1 kg)
	see serial number tag for actual weight	
Track Gauge	56-1/2 in	(1,435.1 mm)
Wheel Base	342-3/8 in	(8,696.3 mm)
Fuel Capacity	185 gallons	(700.3 liters)
Electrical System	24 volt DC negative ground two 12 volt batteries connected in series	
Control System	Jupiter II Control System with interactive operator interface	

1.7.2 Cab

Cab	mounted on air bags, rear entry accessible from either side via stair type steps completely enclosed with laminated safety glass windows windshield wipers, lights, horns defrost fans, jump seats heater / air conditioner / pressurizer
Operator Seat	left and right control consoles all controls accessible from seat adjustable up / down and fore / aft

1.7.3 Performance

1st Gear - Work Mode	0 - 3.8 MPH	(0 - 6.1 k/h)
2nd Gear - Work Mode	0 - 8.0 MPH	(0 - 12.9 k/h)
3rd Gear - Travel Mode	0 - 15.0 MPH	(0 - 24.1 k/h)
4th Gear - Travel Mode	0 - 32.0 MPH	(0 - 51.5 k/h)

1.7 Specifications

1.7.4 Engine

Cummins Model QSC 8.3 Tier III . . . . . 6 cylinder water cooled turbo charged diesel
see engine manual for detailed information
Horse Power. . . . . 230 HP (171.5 kw) @ 2,200 RPM
RPM - Idle. . . . . .800 - 900 RPM
RPM - Full. . . . . .2,200 RPM
Alternator . . . . . .24V - 175 Amp
Other. . . . . engine shutdown system, engine enclosure
engine neutral start / propel interlock

1.7.5 Drive Train

Pump Drive . . . . . .two position pump drive
with two variable displacement piston hydraulic pumps
and two fixed displacement double gear hydraulic pumps
Drive Train - Front / Rear . . . . . hydraulic two-speed gear box on each axle
direct-driven by proportionally variable
displacement drive motor providing full-time
4 wheel drive with automatic speed control
foot operated control pedal
Axles . . . . . 7-3/8 in (187.3 mm)
Bearings. . . . . heavy duty roller bearings
Wheels - AAR Profile . . . . . .28 in (711.2 mm)
cast steel, insulated or non-insulated

1.7.6 Brake System

Brakes . . . . . four wheel tread type
adjustable composition brake shoes
Service Brakes. . . . . air-applied / spring-released
hand operated control valve
Parking Brakes. . . . . spring-applied / air-released
hand operated control valve

1.7 Specifications

1.7.7 Air System

Operating Pressures:		
Main System	100 - 105 PSI	(6.9 - 7.2 bar)
Transmission Shift / Encoder Wheel	75 PSI	(5.2 bar)
Shadowboard Release / Jacks & Clamps Release / Workhead Release / Receiver Release	75 PSI	(5.2 bar)
Air Horn	65 PSI	(4.5 bar)
Index Brake	60 PSI	(4.1 bar)
Projector Buggy Locks	45 PSI	(3.1 bar)
Shadowboard Lift and Bias / Receiver Bias	30 PSI	(2.1 bar)
Compressor	up to 28 CFM	(792.9 l/m)
		direct-driven by engine
		engine lubricated and cooled
Other	air dryer, reservoir and drain valves	

1.7.8 Hydraulic System

Operating Pressures:		
P1 / P2 Pumps - Standby	300 PSI	(20.7 bar)
P1 / P2 Pumps - Traction / Work	3,300 PSI	(227.5 bar)
P3 / P4 / P5 / P6 Pumps - Vibrators	2,300 PSI	(158.6 bar)
AC Pump - Air Conditioner	1,650 PSI	(113.8 bar)
EM Pump - Emergency	2,500 PSI	(172.4 bar)
Clamps - On	3,000 PSI	(206.8 bar)
Clamps - Bias	300 PSI	(20.7 bar)
Liner	2,000 PSI	(137.9 bar)
Workhead - Down Feed	1,850 PSI	(127.6 bar)
Workhead - Up Feed	5,000 PSI	(137.9 bar)
Workhead - Traverse	300 PSI	(20.7 bar)
Reservoir - Working Capacity	184 gallons	(696.5 liters)
Other	auxiliary oil cooler, emergency pump	
		reservoir fill pump and filters

1.7 Specifications

1.7.9 Tamping System

Workheads - Tamping Units . . . . . .4 heavy-duty vibrators drive
16 abrasion resistant tamping tools
Vibrations Per Minute. . . . . .3,000 VPM (50 Hz)
Positive Displacement . . . . . 3/8 in (9.5 mm)
Other . . . . . .traversing workheads tamp entire switch

1.7.10 Clamp System

Rail Clamps . . . . . .combo clamp rail lift system
single rail clamp lifts from ball of rail during production
work or from base of rail where required in switches
Other . . . . . adjustable rail lift height

1.7.11 Leveling System

Standard. . . . . Harsco Rail Delta System
single infrared projector
non-adjustable fixed shadowboard
double barrel infrared receivers
mounted on rapid response actuators
Other . . . . . inclinometer for accurate cross level

1.7.12 Lining System

Standard. . . . . Harsco Rail System V
Optional . . . . . LineLite and Laser
Alignment System

1.7.13 Frame and Suspension

Frame. . . . . heavy duty, high strength steel
boxed beam, welded construction
Suspension . . . . . .front axle trunnion mounted
rear axle elastomeric suspension
Other . . . . . rear draw bar

Notes:

CHAPTER 1.1
ADDITIONAL SAFETY INFORMATION

TABLE OF CONTENTS
ADDITIONAL SAFETY INFORMATION

CHAPTER 1.1

Safety 1.1-1
Safety Rules 1.1-1

Safety Features 1.1-2
Emergency Engine Shutdowns 1.1-2
Spring Parking Brakes 1.1-3
Emergency Pump ON/OFF Button 1.1-4

Safety Locks 1.1-5
Workhead Locks 1.1-5
Combo Clamp Frame Locks 1.1-6
Projector Buggy Locks 1.1-7
Shadowboard Assembly Lock 1.1-8
Receiver Buggy Assembly Lock 1.1-9
Steps, Platforms, and Hand Rails 1.1-10
Caging / Un-caging Spring Parking Brake Chamber 1.1-12

Safety

Read this chapter before you attempt to operate or perform maintenance on the equipment described in this manual. This chapter describes the following:

- Safety rules
- Safety features
- Safety locks

Safety Rules

1. Follow all rules and regulations issued by your railroad concerning self-propelled track equipment.

2. Read this section very carefully and make sure you know what safety features and safety devices are provided with the equipment.

3. Carefully read all instructions, notes, cautions, and warnings that are provided in all other chapters in this manual.

4. Know the positions and functions of all controls before attempting to operate this machine.

5. Before operating the equipment, perform a visual inspection of the equipment components, and any attachments. Check for broken, loose, or worn parts.

6. Before starting the engine, check all fluid levels; engine oil, coolant, hydraulic oil and fuel. Keep FULL. Check for any leaks, loose or damaged parts, worn or damaged belts, and any change in engine appearance.

7. Before moving the machine on the track (travel), make sure all working components and attachments are secured by the appropriate safety devices, such as safety locks.

8. Activate the horn several times to alert all those in and around the machine that the machine is going to move, either forward or reverse.

9. Before moving or operating the equipment, make sure all personnel are safely away from the equipment.

10. Make sure the equipment and the engine have stopped and all work components are locked in their safety locks before performing service or maintenance tasks. Also, make sure the master battery switch is OFF.

11. Do not perform any welding (repairs) unless all electrical power to the equipment is turned OFF. Make sure the main battery switch is in the OFF position or the battery cables are disconnected.

12. Keep all equipment and components clean.

Safety Features

The following emergency shutdown systems are provided as standard equipment on this machine.

Emergency Engine Shutdowns

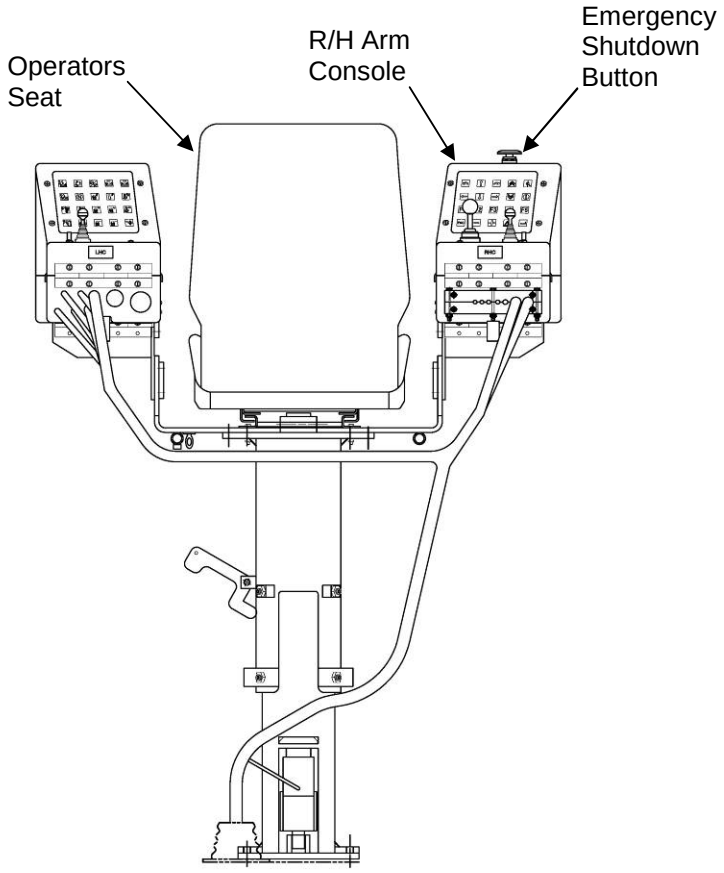

Operator's Seat (rear view)
Figure 1.1-1

The engine has an **AUTOMATIC EMERGENCY SHUT-DOWN** system which is automatically activated if the engine oil pressure is too low or if the engine coolant temperature is too high.

The **MANUAL EMERGENCY ENGINE SHUT-DOWN** button is located on the upper edge of right seat control panel. Refer to Figure 1.1-1.

NOTE: The emergency shutdown push button must be pressed and held to shut the engine down. Lift to reset.

- Some machines are equipped with "optional" external shut-down buttons.
- If the operator's seat is equipped with a seat belt, the operator should comply with railroad rules governing seat belt usage.

The engine used on this version of the MK IV Tamper features an engine protection system. Critical engine temperatures and pressures are monitored and diagnostic faults are logged when an over or under normal conditions occurs. Two (2) indicator lights located in the main control box are provided to alert the operator when an out-of-range condition develops. The Check Engine light will blink or flash when an out-of-range condition continues to get worse. If the Stop Engine light comes on, the operator should shut down the engine as soon as possible to reduce the possibility of engine damage. The Stop Engine light will flash for 30 second to alert the operator that the engine is going to shut down. Refer to Figure 2-2 and the engine operation manual.

Spring Parking Brakes

The Spring Parking Control Brake (Air Deactivated) will not release if the air pressure in the braking system is less than 60 PSI. When released, the Spring Parking Brake automatically applies if the air pressure in the braking system drops below 60 PSI.

The **SPRING PARKING BRAKE CONTROL** is located on the behind of the right console panel. The spring parking brakes are released when the control knob is **PULLED OUTWARD** (air is applied to the spring portion of the brake chamber) and applied when the control Knob is **PUSHED INWARD** (air is released from the spring portion of the brake chamber). Refer to Figure 1.1-2A, B and C.

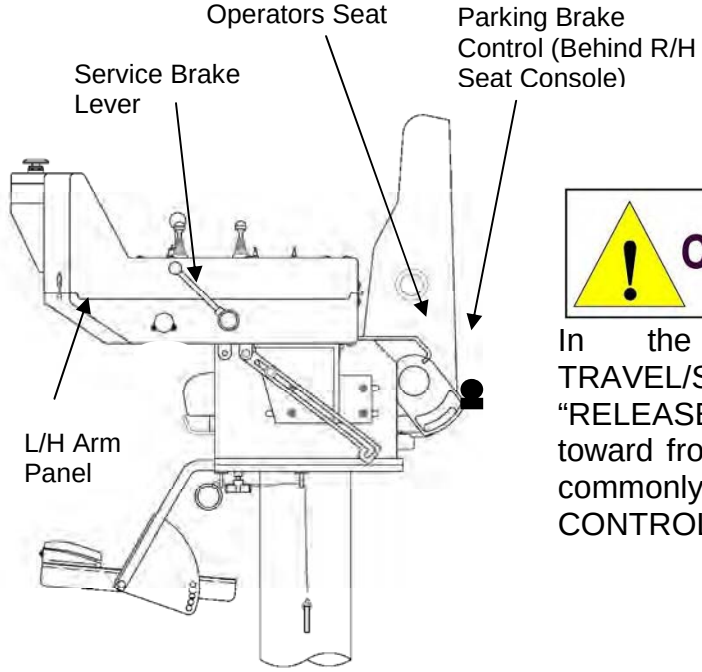

Figure 1.1-2A

Caution

ALWAYS START AND END WITH THE SPRING PARK CONTROL BRAKE IN THE "APPLIED" POSITION (Push In the Push/Pull Knob) AND THE TRAVEL/SERVICE HAND BRAKE LEVER IN THE "RELEASED" POSITION (push lever forward toward front of seat). Spring Parking Brake is also commonly referred to as the MAXI BRAKE CONTROL.

Figure 1.1-2B

Figure 1.1-2C

Emergency Pump ON/OFF Push Button

If there is a problem with the engine or the hydraulic system and the working components are NOT in their safety locks, IE work heads, combo clamp frame, etc., the emergency pump can be used to place the working components in their safety locks. Press (inward) the **EMERGENCY PUMP ON/OFF PUSH BUTTON** (red) to activate (start) the emergency pump. The emergency pump switch is located on the right side of the hydraulic tank. Refer to Figure 1.1-3.

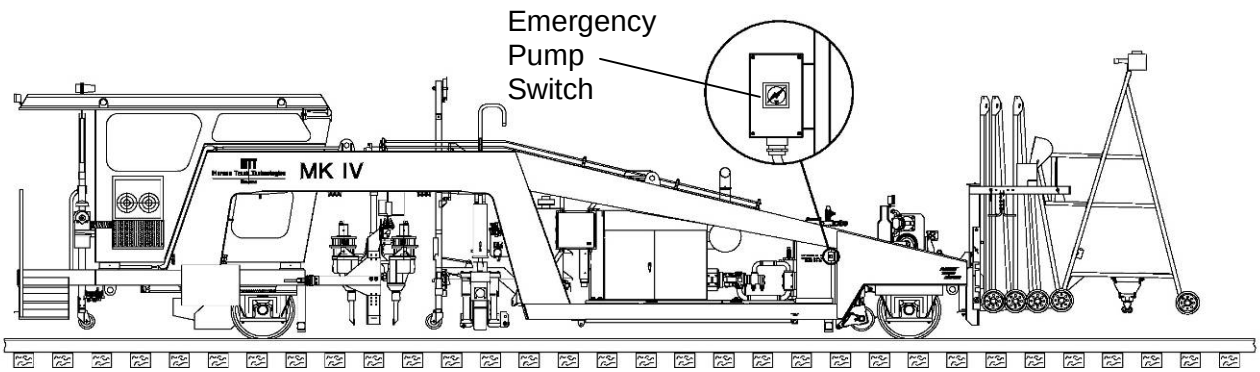

Figure 1.1-3

With the pump started and the machine in *work mode*, use joysticks to raise the desired work component into its safety lock. **Be sure to raise only one (1) component at a time.** NOTE: *If the computer is down, the valves must be activated manually*. When all of the work components are secured in their safety locks, turn the emergency pump OFF.

NOTE: The EMERGENCY PUMP is a small pump mounted to a 24 VDC starter motor. DO NOT RUN the Emergency Pump longer than 1 minute when the pump is loaded (2500 PSI) or when NOT loaded more than 5 minutes. Allow the motor ample cooling time before restarting emergency pump.

The emergency pump ONLY provides enough oil (volume) to lift the work components, such as the work heads, into their safety locks. The emergency pump does NOT provide enough oil (volume) to move/travel the machine or to use the machine to perform work.
If you DO NOT have electrical power, you can manually shift the appropriate hydraulic valves to raise the components into their safety locks.

Safety Locks

All working components on the machine, such as the work heads, have safety locks, which should always be used to prevent damage to the machine when traveling and to prevent injury to personnel. Refer to Figure 1.1-5 for the general location of the Safety/Travel Locks.

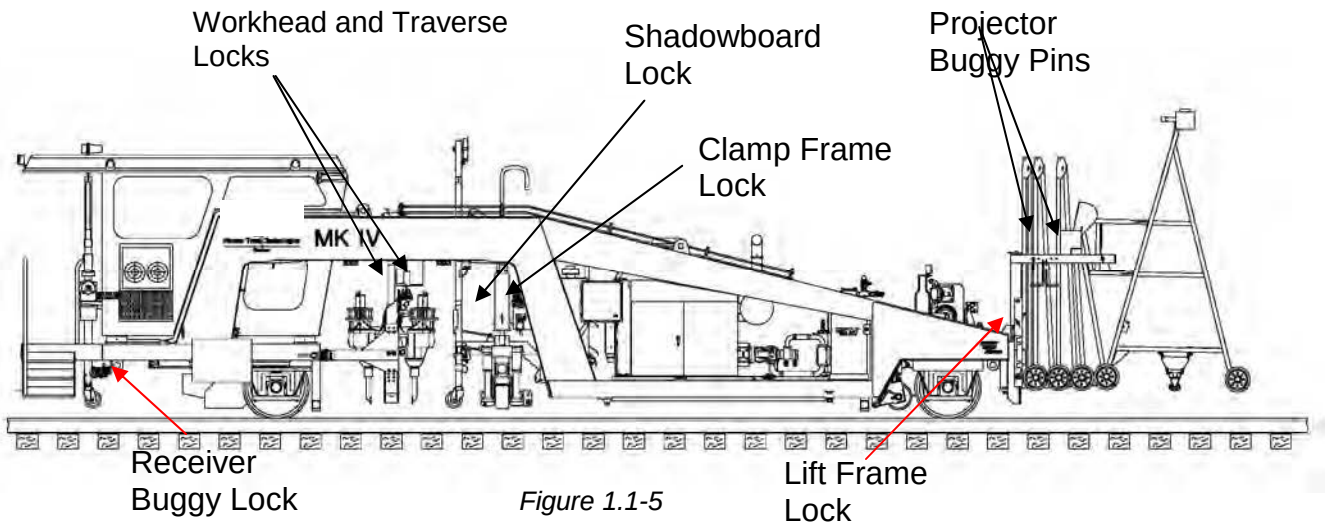

Figure 1.1-5

Workhead Locks

Each work head is equipped with a mechanical safety lock .Two (2) locks are used on standard model machines and four (4) on split tool models. These locks can be operated either pneumatically (by way of a pushbutton located on the left keypad) or manually (by moving a lever mounted outside the machine on the carrier frame). These safety locks are used to prevent the downward movement of the work heads during travel. When the workheads are locked, the workhead lock icon on the main screen will appear gray as shown at right. If the workheads are unlocked, this icon will be yellow. There is no alarm if the workheads are unlocked during travel.

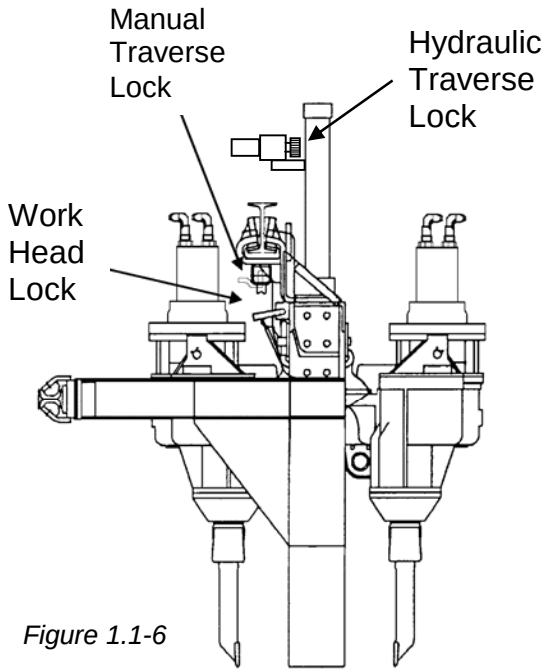

Figure 1.1-6

There are two (2) hydraulic controlled and operated traverse locks that keep the work heads from moving/drifting when traveling and working (tamping). In addition, two (2) lever operated, mechanical locks mounted one (1) on each work head frame, are also used to prevent the work heads from moving. Refer to Figure 1.1-6.

The work heads should be placed in their safety locks for track travel, maintenance and repairs. Failure to lock the work heads may cause serious damage or bodily injury.

Combo Clamp Frame Locks

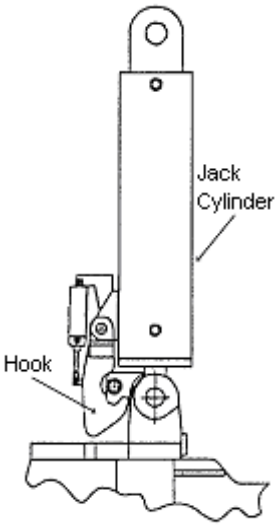

Figure 1.1-7

There are two (2) air controlled and operated locks for the combo clamp frame, one (1) on each jack cylinder. These locks are used to secure the clamps in the “raised” position for travel. Refer to Figure 1.1-7. When the combo clamps are locked, the lock icon on the main screen will appear gray (locked) as shown at right. When unlocked, this icon will be yellow.

Trying to move the machine while in travel mode with the combo clamps down will cause an audible alarm to sound and an on screen warning message to appear. Raising the combo clamps into the stowed position will cause the audible alarm will stop. Pressing the lock icon switch again until gray (above) will fully engage the combo clamp frame locks and eliminate the on screen warning message. These messages and alarms are generated by software programming.

Projector Buggy Locks

A forklift type, buggy lift system is used on this machine for positioning the pusher buggies and projector buggy for work or travel. On the right hand side of the lift frame, a manual type locking pin is used to secure the lift frame for travel or work. Refer to Figure 1.1-8.

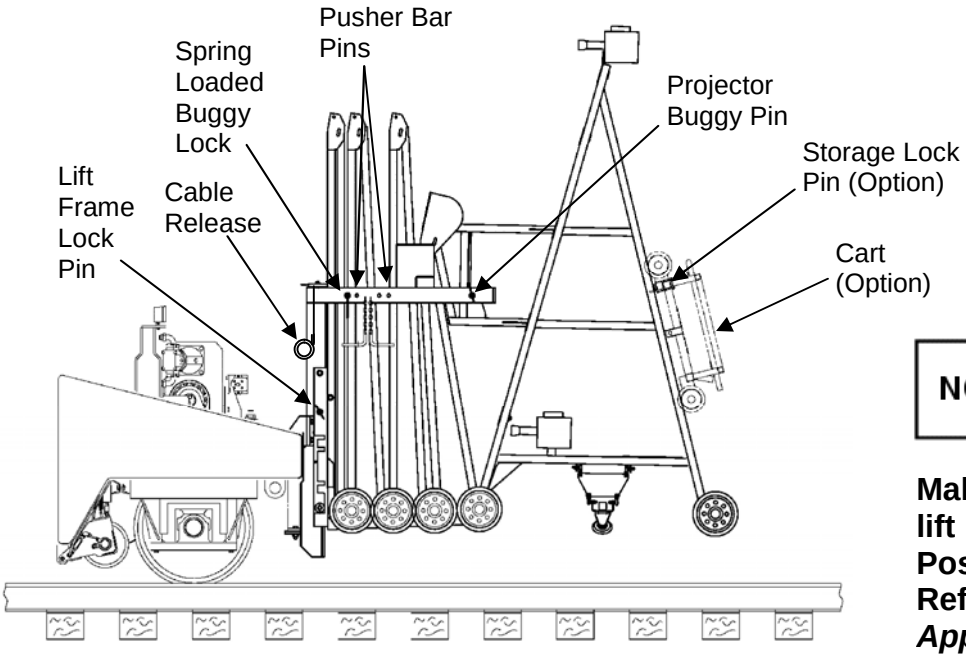

Travel Position
Figure 1.1-8

NOTE

Make sure that the buggy lift is locked in the Travel Position for Track Travel. Refer to Chapter 4 and *Appendix B* for additional instructions.

On the top portion of the lift frame, several manual or optional air locking devices are used for securing the pusher buggies and projector buggy for work or travel. A cable operated hook and spring loaded locking pin are used to keep fold up pusher buggies in proper position for travel. Two (2) locking pins and two (2) wheel locks are provided to secure pusher buggies in the lift frame that are not used for work. When the pusher buggies are positioned for work, each hinged joint must be secured with the locking pin provided. An additional locking pin is provided to secure the projector buggy to the lift frame for travel.

The surfacing projector is mounted to a fixed bracket at the top of the projector buggy. Some models however, have the surfacing projector with height adjustment. For these models, a locking pin is provided to secure the projector in the selected position.

At the bottom of the projector buggy the liner projector is mounted on a support channel that slides in for travel and out for work. Locking pins are provided to secure the projector in either position. Note, the lining projector should be removed for travel. Refer to Figure 1.1-8.

Shadowboard Assembly Lock

The shadowboard assembly lock is air controlled and operated from an air control valve on the right hand side of the machine (right clamp frame) and is used to secure the shadowboard frame in the “raised” position for travel. Refer to Figure 1.1-9.

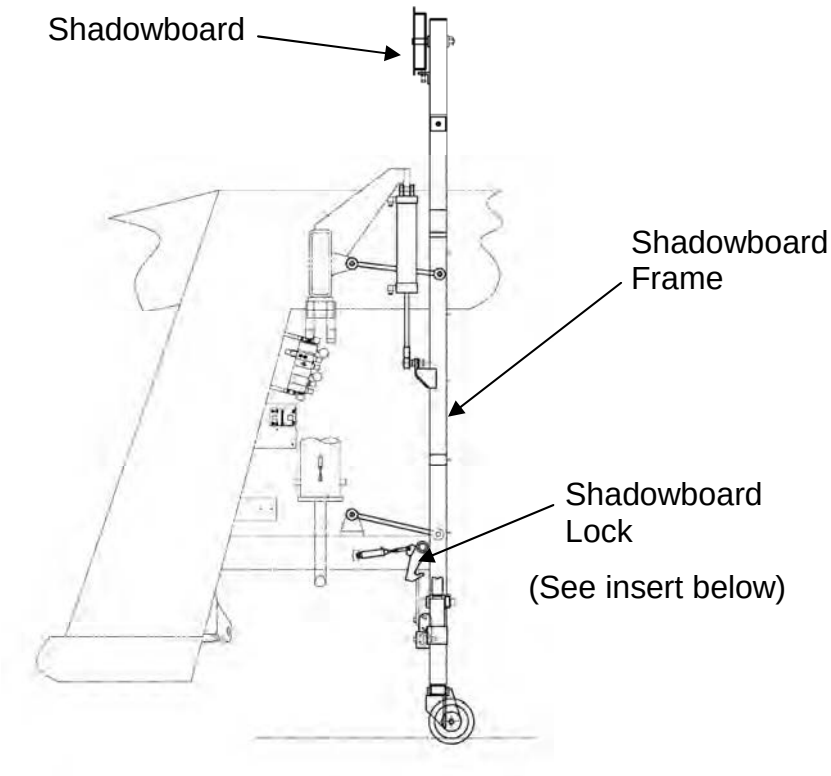

Figure 1.1-9

Receiver Buggy Assembly Lock

The lock is air controlled and operated with an air valve located on the right rear of the machine. The lock is used to secure the receiver buggy components in the “raised” position for travel. Refer to Figure 1.1-10.

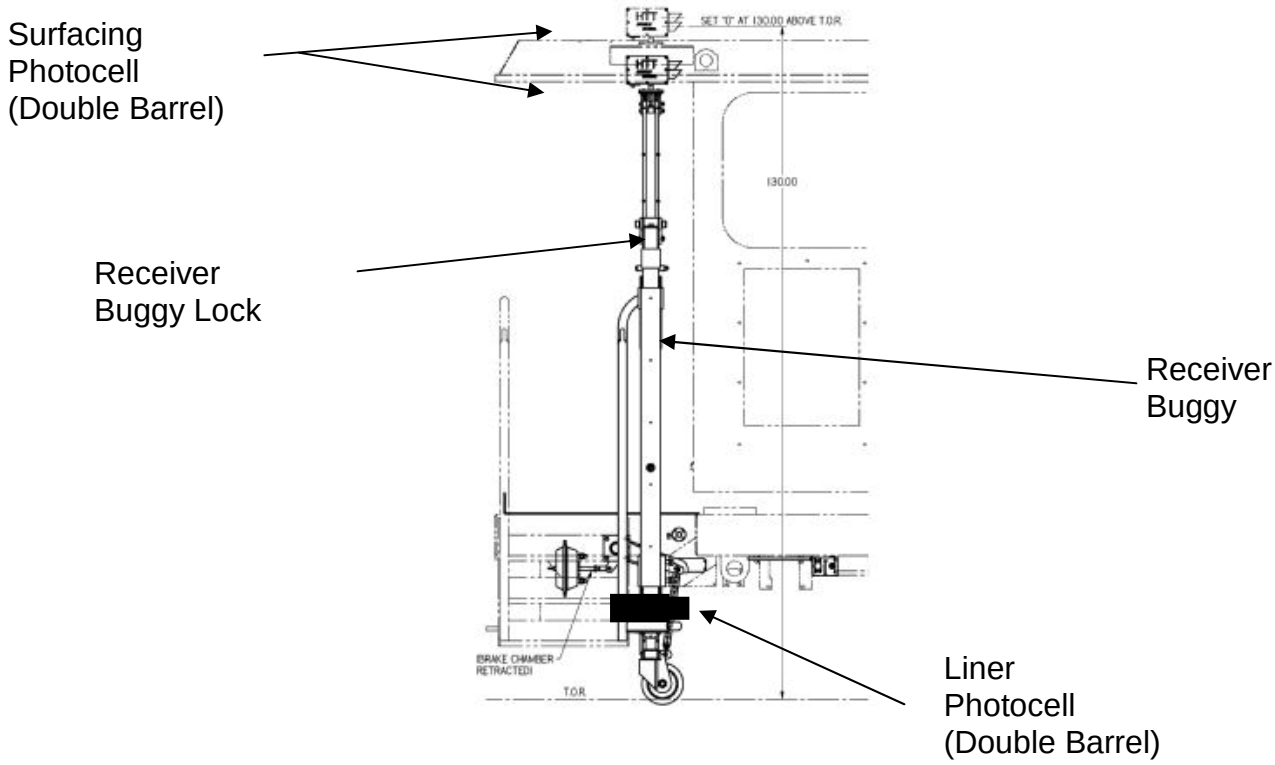

Figure 1.1-10

Steps, Platforms and Hand Rails

Current machines are fitted with steps and platforms on components such as; the fuel tank, workhead traverse beam, shadowboard frame assembly and the projector buggy. Hand or grab rails have also been added in some of these areas. These features provide safer access to components when servicing or making repairs.

Rear Steps and Hand Rails

Side Hand Rails

Shadowboard and
Workhead Traverse Beam
Access Platform

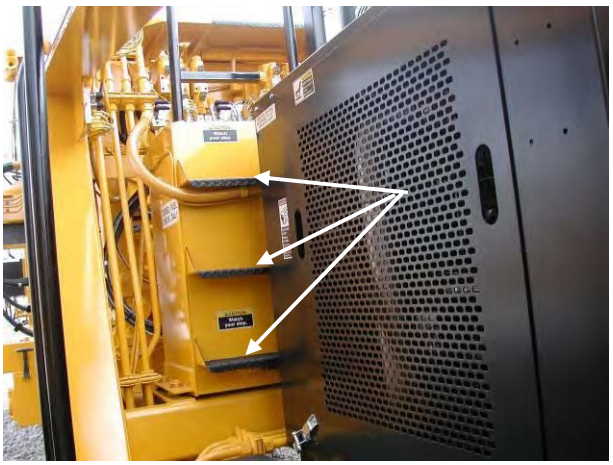

Fuel Tank Access Steps

Figure 1.1-11

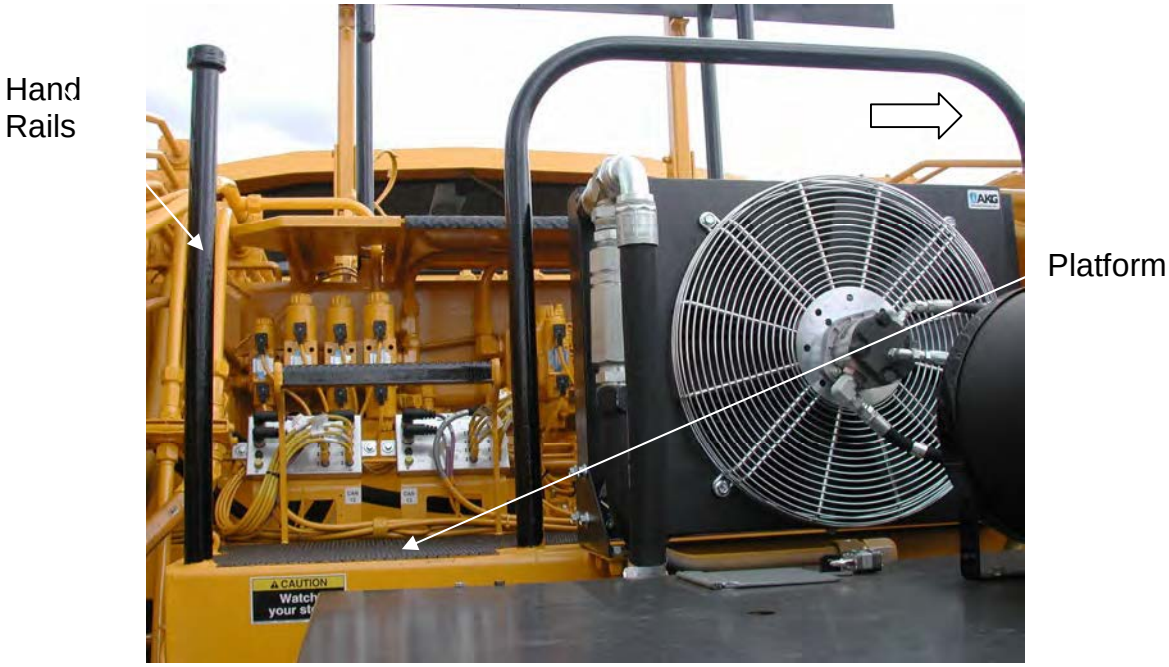

Fuel Tank Access Platform and Hand Rails

Figure 1.1-12

Caging and Uncaging Spring/Parking Brake Spring

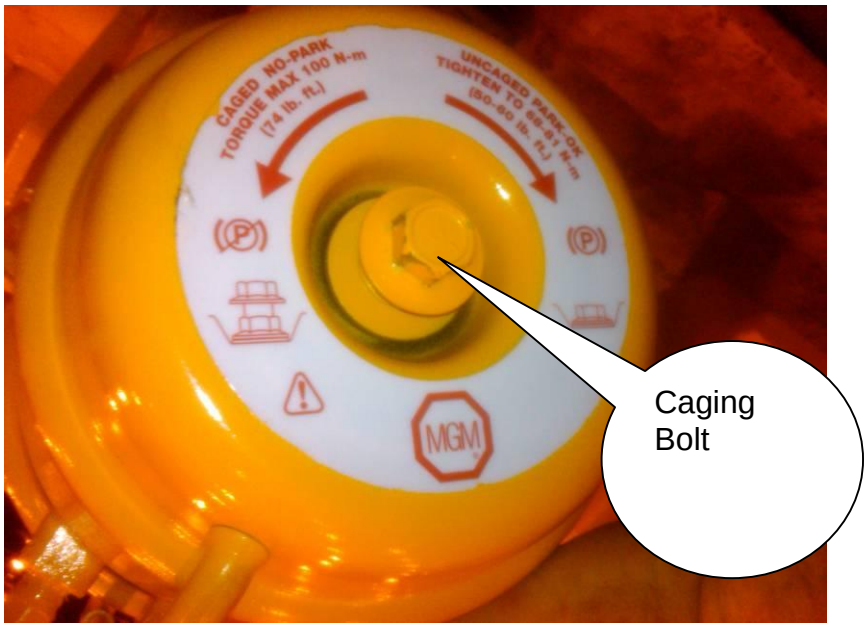

Figure 1.1-13

- **CAGE BRAKE CHAMBER SPRING** BY TURNING CAGING BOLT COUNTER CLOCKWISE UNTIL SPRING IS CAGED AND TORQUE TO A MAXIMUN 74 lbs.

- **UNCAGE ALL BRAKE CHAMBER SPRING** BY TURNING CAGING BOLT CLOCKWISE UNTIL TIGHT AND TORQUE TO 50-60 ft lbs.

CHAPTER 2
GENERAL OPERATION

TABLE OF CONTENTS
GENERAL OPERATION

CHAPTER 2

Machine Controls - Travel Mode 2-1
General Layout 2-1
Engine Control Panel (ECP) 2-2
Operators L/H Arm Panel 2-3
Operator L/H Keypad 2-4

Starting the Engine 2-5
Hydraulic Oil 2-8
System Air 2-8

Traveling the Machine 2-9
Procedure 2-9
Gearbox Engagement 2-10

Shutting Down the Engine 2-13
Normal Shut Down Procedure 2-13
Towing the Machine (engine running) 2-14
Towing the Machine (engine off) 2-15

Machine Controls - Work Mode 2-17
L/H Operators Arm Panel 2-17
L/H Workhead Joystick 2-17
L/H Combo Clamp Frame Joystick 2-18
Seat Control Switch 2-18
R/H Operators Arm Panel 2-19
Cycle/Forward/Reverse/Workhead Joystick 2-19
R/H Workhead Joystick 2-19
R/H Combo Clamp Frame Joystick 2-19

MACHINE CONTROLS - Travel Mode

General Layout

All controls are strategically located to give the operator the utmost in visibility while traveling as well as while working. General component layout of the MK IV is illustrated in figure 2-1.

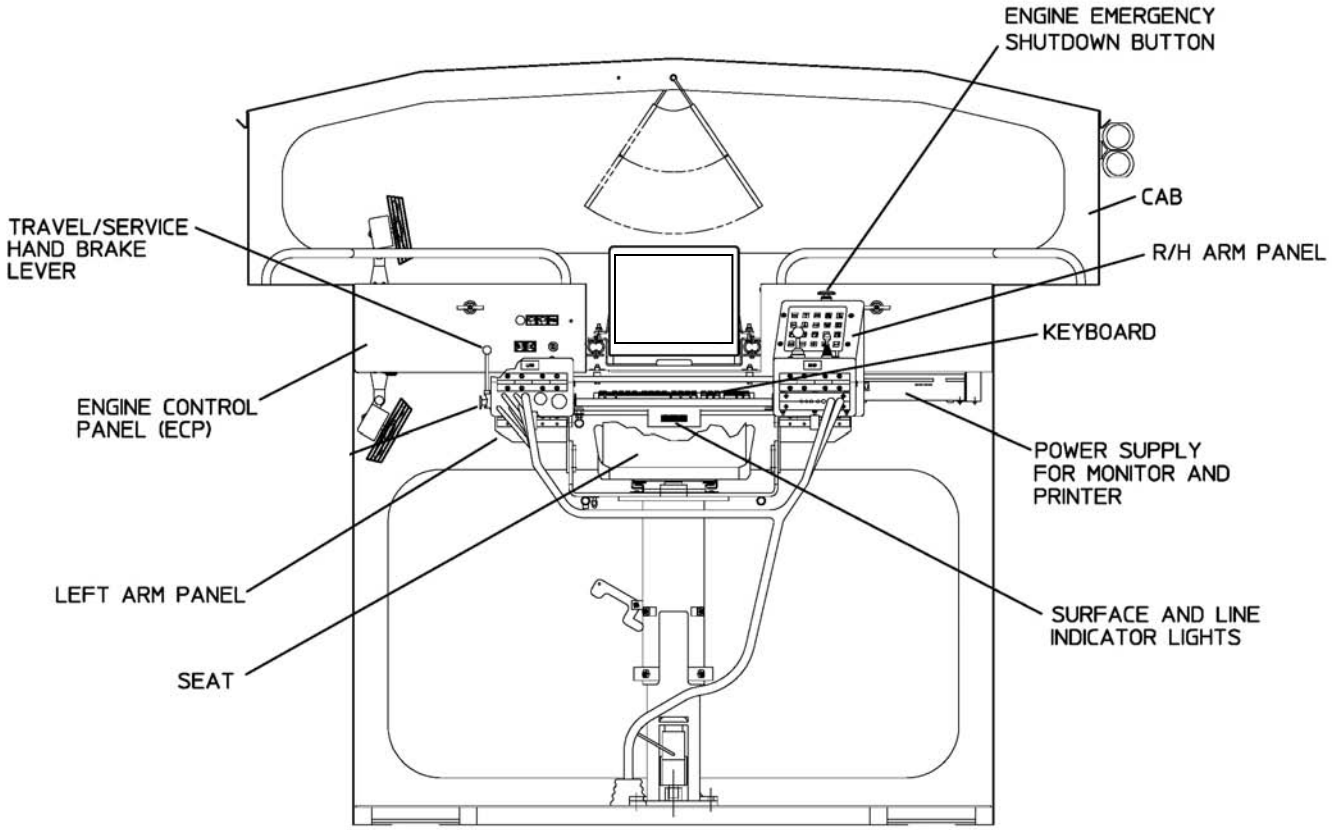

Figure 2-1

Engine Control Panel (ECP)

The Engine Control Panel (ECP) is located in front of the operator seat to the left of the color monitor. This panel contains front and rear wiper switches, work light switch, front and rear running light switches, Jupiter computer ON/OFF switch, wait to start indicator light and the keyed ignition switch. Refer to Figure 2-2.

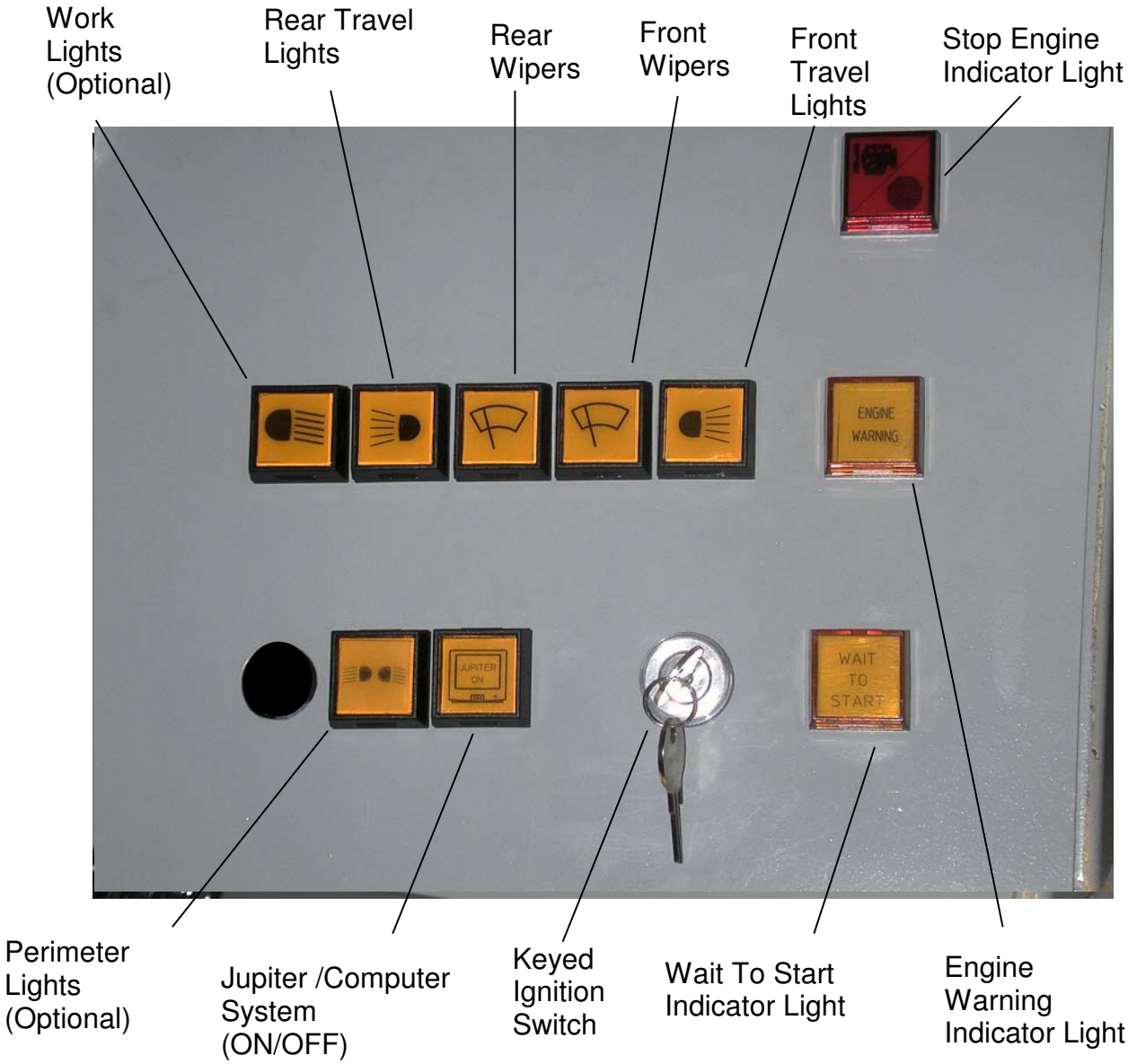

Figure 2-2

DO NOT try to start the engine if the Wait To Start indicator light (yellow) is on. Additional features on the Engine Control Panel (ECP) are the Engine Warning (yellow) and Stop Engine (red) indicator lights. Refer to Figure 2-2. These features part of the engine protection system. Critical engine temperatures and pressures are monitored and diagnostic faults are logged when an over or under normal conditions occurs. The two (2) indicator lights located in the

Engine Control Panel (ECP) are provided to alert the operator when an out-of-range condition develops. The Engine Warning (yellow) light will blink or flash when an out-of-range condition continues to get worse. If the Stop Engine (red) light comes on, the operator should shut down the engine as soon as possible to reduce the possibility of engine damage. The Stop Engine light will flash for 30 second to alert the operator that the engine is going to shut down.

Operators L/H Arm Panel

The L/H Arm Panel houses controls that are used in both the travel mode and the work mode. The controls used for the travel mode are the work/travel selector switch, direction of travel selector switches (forward, neutral and reverse) and the service brake control. (located on the side of the console assembly). A foot switch, located on the seat pedestal, is used for initiating traction in travel mode and cycle in work mode. The controls used in work mode are electrically disabled when in the travel mode. A seat control switch. Refer to Figures 2-3A, 2-3B.

Left Hand Arm Console

.

Figure 2-3A

Operators Seat

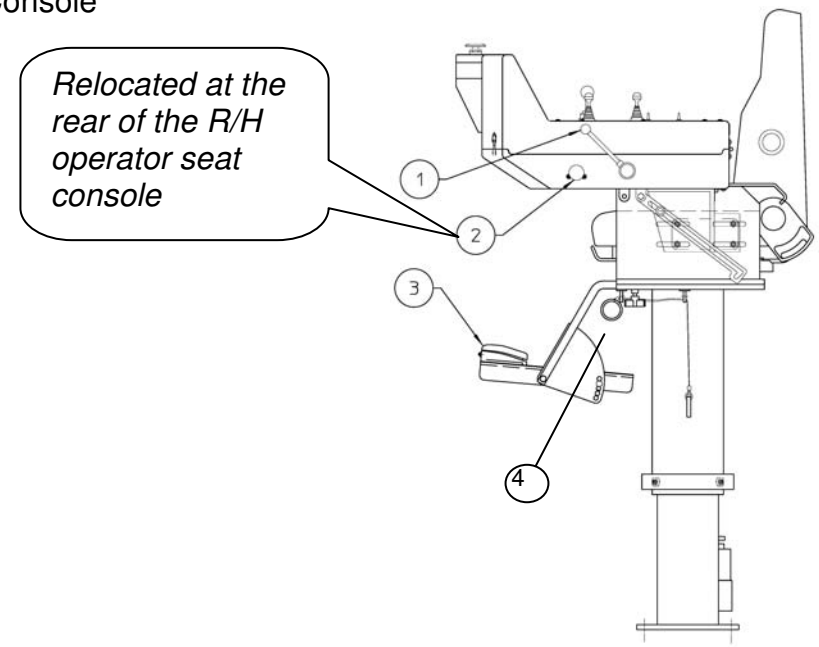

Figure 2-3B

1. Travel/Service Hand Brake Lever
2. Spring /Parking Control Brake *(Relocated)*
3. Travel or Cycle Floor Pedal
4. Swivel Seat Lock Release Cable

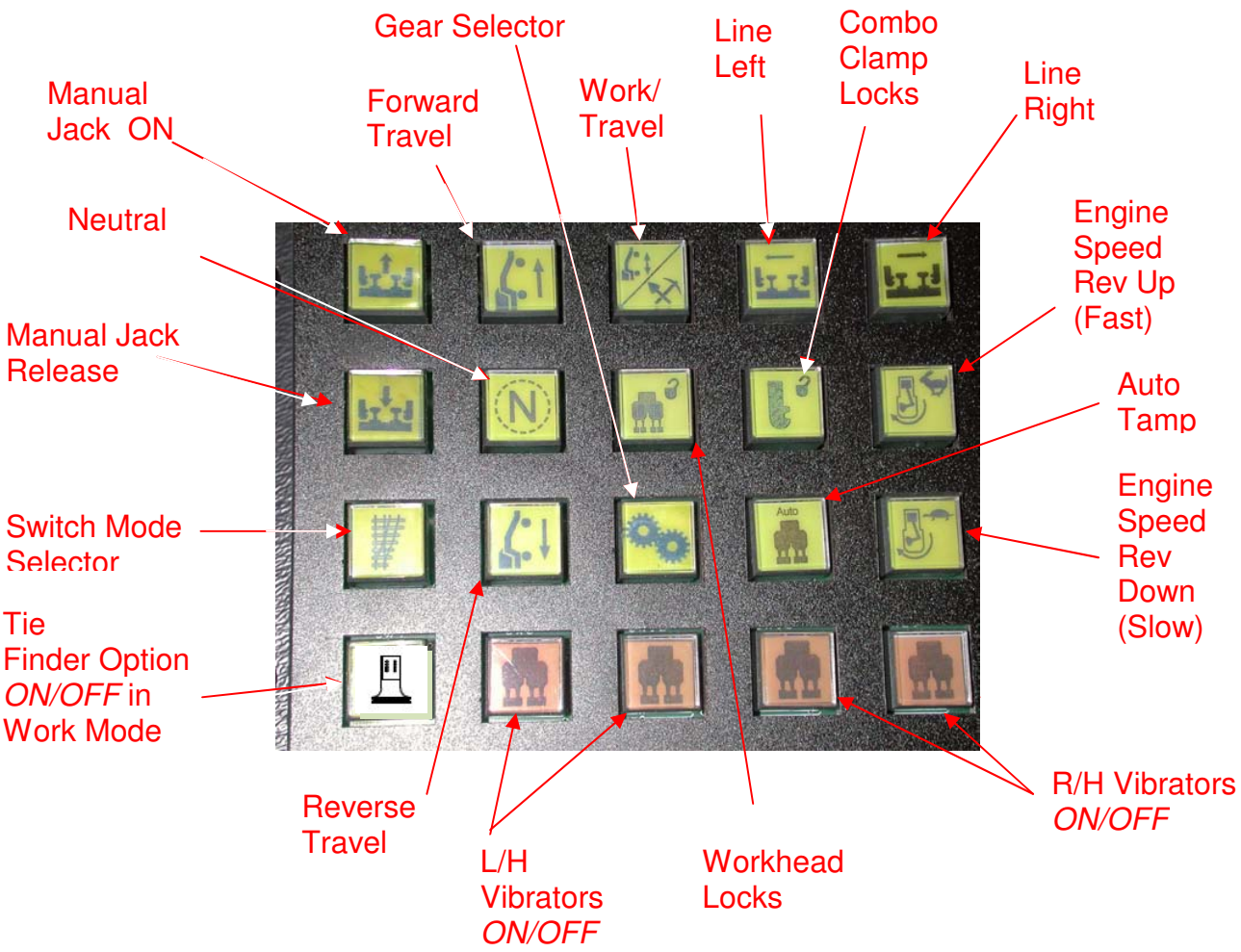

Left hand Operator Keypad

Figure 2-3C

Starting the Engine

1. Make sure you read *"Safety"*, before you attempt starting the engine.

   Caution **ALWAYS START AND END WITH THE SPRING PARKING CONTROL BRAKE IN THE "APPLIED" POSITION** (Push In the push/pull knob) AND **THE TRAVEL/SERVICE HAND BRAKE LEVER IN THE "RELEASED" POSITION** (push lever forward (toward front of seat). Parking Brake is also commonly referred to as the MAXI BRAKE CONTROL.

2. Make sure you perform the recommended scheduled maintenance. Check the diesel fuel level, check the engine and hydraulic oil level, check coolant level, etc.

3. Turn **ON** the main battery switch, located in the battery box on the left side of the engine. Refer to Figure 2-4.

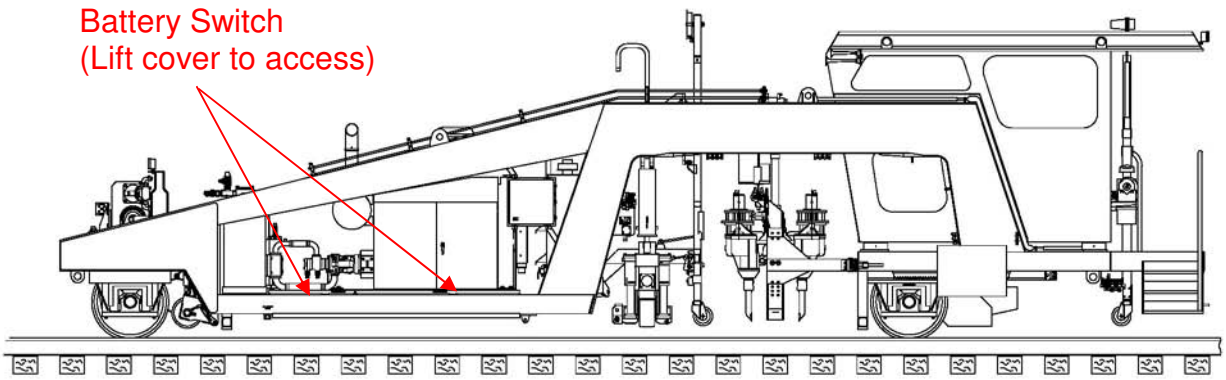

Figure 2-4

4. Insert the key into the ignition switch. The ignition switch is located on the Engine Control panel in front of the left operator seat console. Refer to Figure 2-2.

   NOTE Current MK IV models w/Tier III engine have a Wait To Start Indicator Light (yellow) located on the Engine Control panel. DO NOT try to start the engine if this light is FLASHING or remains ON. REMEMBER, the Wait To Start Indicator Light MUST be OFF before beginning the starting sequence.

5. Turn the ignition key to the right (clockwise). The engine should start. Release the ignition key immediately after the engine has started.

6. Use The *Engine Speed Rev Up (increase)* button after the engine started, to increase the engine speed to desired RPM's. Refer to Figure 2-3C.

7. When the engine is successfully started, permit the engine to run at the idle speed for about a minute before slowly raising the engine rpm.

Idle Speed - 1,000 RPMs
Max Speed – 2,100 RPMs

8. Turn on the Jupiter Control System by pressing the *Jupiter Computer ON/OFF* button on the engine control panel. Refer to figure 2-2 and 2-5

Caution

DO NOT ENGAGE THE STARTING MOTOR FOR MORE THAN 30 SECONDS. WAIT 2 MINUTES BETWEEN UNSUCCESSFUL ATTEMPTS. If engine does not start after three attempts (3 tries), refer to the engine operator's manual.

NOTE

If the hydraulic oil temperature is below 32°F or 0°C refer to *Hydraulic Oil* on page 2-7. For those models equipped with the **COLD START** option, press the cold start button once.

NOTE

If the ambient temperature is below 32°F or 0°C, operate the engine at a moderate speed for about 5 minutes before full loads are applied. Also, before increasing the engine rpm refer to Hydraulic Oil info on page 2-7.

Caution

Do not idle the engine for excessively long periods. Long periods of idling (more than 10 minutes) can damage an engine because combustion chamber temperatures drop so low the fuel will not burn completely. This will cause carbon to clog the injector spray holes and piston rings, and can cause the valves to stick. If the engine coolant temperature becomes too low (60°C [140° F]), raw fuel will wash the lubricating oil off the cylinder walls and dilute the crankcase oil; therefore, all moving parts of the engine will not receive the correct amount of lubrication.

9. If the engine fails to keep running, check the engine oil pressure sender or coolant/water temperature sender.
10. If the engine oil pressure is too low (0 to10 psi) or if the engine coolant/water temperature is too high (220°F or 104°C), the engine will shut down automatically.
11. To shutdown the engine, follow the engine shutdown procedure at the end of this section. Refer to page 2-12

Engine
Control
Panel
(ECP)
Jupiter/
Computer
ON/OFF
Flat
Screen
Monitor
RHC

Figure 2-5

NOTE: If the *Jupiter Computer button* is accidentally left ON (after machine shut down), returning to the machine and turning ON the main battery switch (See figure 2-4) will cause the Jupiter system to boot up automatically. **This practice is not recommended.** Please refer to *Normal Shut Down Procedure* later in this chapter.

Hydraulic Oil

The hydraulic oil temperature indicator icon *(shown on the right)* is displayed on the lower right side of the Travel and Home/Work Jupiter screens. If the hydraulic oil is either too hot or too cold, there will be an alarm to alert the operator of the condition of the oil. If the oil is less than 70 ° F this icon will display in red or if the temperature exceeds 180° F the icon will also display in red. When the oil is becomes hot, reduce the engine RPM until the indicator icon is darken or grayed out.

There are mechanical temperature switches located on the hydraulic tank that can be used to check oil temperature. The amount of warm-up time required may vary depending on the outside temperature and if the machine is equipped with the optional fast warm-up circuit. When the hydraulic oil icon is removed from the main screen, the hydraulic oil is warm enough to begin **TRAVEL** and/or **WORK**. **DO NOT WORK** with the icon on and an alarm message of hydraulic oil too hot and **DO NOT TRAVEL** when hydraulic oil temperature is above 200°F or 93°C.

Hydraulic Oil Warm Up Procedure. From the main screen 1st toolbar**,** the computer warm-up option can be selected. The Warm-up option is under the F5 options button, first main toolbar button set. F5 opens the options menu. Use the plus or minus key to move the yellow border over top of the warm-up symbol, then press F5 to turn ON warm-up. The Travel/Work push button must be in the **WORK** position. On initial boot up of the computer, the **Warm up** option will be highlighted.

System Air

Use the Jupiter Diagnostic Screens to check the system air pressure. See chapter 3, F2 Engine Diagnostic Panel for a detailed description of the system air operation (Second Main Toolbar), F2 (Diagnostic Menu) then F2 (Engine Diagnostic Panel). Refer to pages 3-35, 3-40.

NOTE

Normal system air pressure is 100 PSI.
Governor pressure is 95 - 105 PSI.

Travelling the Machine

Procedure:

1. Make sure you read *"Safety"*, before you attempt to move/travel the machine.

ALWAYS START AND END OPERATIONS WITH THE SPRING PARKING CONTROL BRAKE IN THE "APPLIED" POSITION (Push In the push/pull knob) AND **THE TRAVEL/SERVICE HAND BRAKE LEVER IN THE "RELEASED" POSITION** (push lever forward (toward front of seat)). Note the Parking brake is also commonly referred to as the MAXI BRAKE CONTROL.

2. Press the **TRAVEL/WORK** push button located on the left hand arm console key pad. This will bring up the Travel Screen on the monitor.

3. Select the TRAVEL MODE **F1** on the confirmation panel.

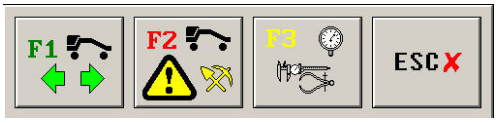

4. Make sure the machine engine is operating properly, the hydraulic oil is warm and the air system has reached the normal operating pressure (100 PSI).

5. Make sure all of the machine components, such as the workheads and buggies (projectors and receivers), are in the "locked up" position and are secured in their safety locks.

6. Select a direction of travel, forward or reverse on the Travel Screen. The selected direction will be highlighted in YELLOW.

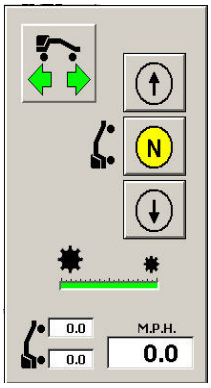

7. Press the GEAR SHIFT Panel selector on the l/h keypad to display the GEAR SHIFT Panel.

8. On the Gear Shift Panel, select F1 Low Gear, F2 High Gear or Neutral. Select F5 to enable the Front Axle, Rear Axle or Both. The selected axle will be highlighted in YELLOW. **F4 i**s the Jog switch which is provided to aid in gearbox engagement.

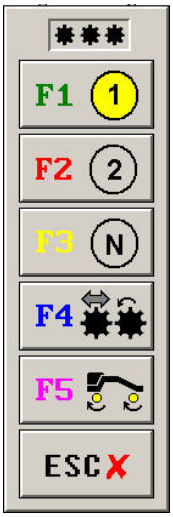

NOTE

Gear and axle selection must be done before moving the machine. If a change is required, stop the machine, make the change and then proceed. Gear and axle selection are NOT permitted while the machine is moving.

Gearbox Engagement

The front and rear gearboxes each have a panel to clearly indicate the engagement status of the associated gearbox as follows:

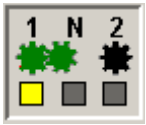

Along the bottom of the panel are three status boxes for each of the three proximity switches on the gearbox. If made, they will illuminate yellow. When these inputs indicate the selected gear is engaged, the gear icons on this panel will be green (or black if neutral is successfully engaged). If these inputs are not indicating the selected gear is engaged, the gear icons will be drawn RED.

In addition, these panels indicate which gear the machine is attempting to engage as follows:

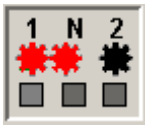

Attempting to engage first or low gear

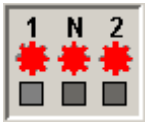

Attempting to engage neutral

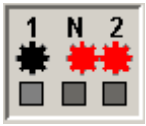

Attempting to engage second or high gear

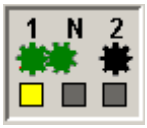

First or low gear successfully engaged

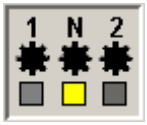

Neutral successfully engaged

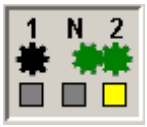

Second or high gear successfully engaged

NOTE More than one proximity switch being made will be considered as an unsuccessful engagement and the gear icons will be RED and drawn to indicate which gear is being attempted.

The gear engagement panels are displayed at the left side of the status panel of the main screen. The upper engagement panel is for the front axle, and the lower panel is for the rear axle.

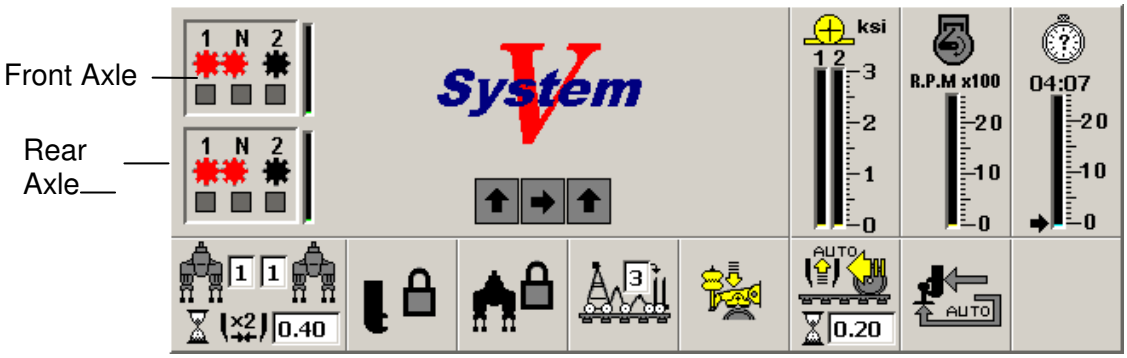

Adjacent to each engagement panel is a vertical slider that shows the output to the motor stroke control for each axle. When a stroke slider is at the bottom most position, the motor stroke is at a maximum. When at the top most position, motor stroke is at the minimum. Motor strokes are automatically adjusted during work mode to prevent wheel spin. This allows the machine to “feel out” the limits of adhesion and to compensate for the unequal weight of the two axles. If enabled, the machine can also automatically adjust the “hydraulic decel” applied in work mode to prevent sliding while hydraulically decelerating.

To the right of this panel and left of engine rpm slider, are sliders that indicate pump pressure for each of the two pumps.

Hydraulic oil temperature is now available in analog form and a histogram for this is visible at the bottom right hand side of the main screen as well as the engine diagnostics panel.

Caution The operator seat MUST BE turned in the direction of Travel.

9. Apply the travel/service hand brake. Pull lever rearward (toward rear of seat) then release. (located on the Operator's L/H arm panel) Pull out the Spring Parking Brake push/pull control knob located behind the Operator's r/h arm panel. Refer to Figures 1-2A, 1-2B and 1-2C.
10. Sound the horn (according to railroad rules) to alert personnel of machine movement.
10. Press and hold the traction/cycle foot pedal, this will engage the selected gearbox and axle. The foot pedal is located on a pedestal in front of the operator's seat.
11. Slowly release the travel/service brake lever, this should allow the machine to move in the direction selected.

NOTE The brake is released whenever forward or reverse traction is enabled, and will only come on when the machine is reported as moving at a rate of less than 0.5 MPH (in other words, very nearly stationary). Therefore as the operator allows the machine to come to a stop or applies the brakes until it comes to a stop, once nearly at rest the brake is set, thereby "holding" the machine in position.

12. Push the increase throttle button down to increase engine and machine speeds. The throttle is located on the L/H arm panel. Pushing the button down increases engine speed, pushing the throttle decrease button decreases engine speed. Refer to page 2-4.
13. To slow down or stop the machine, push the throttle decrease button to decrease the engine speed (RPMs). Release the traction/cycle foot pedal and apply the **TRAVEL/SERVICE BRAKE** lever until the desired speed is reached and/or the machine stops.
14. When STOPPING, after the machine comes to a complete STOP. Press the neutral transmission button, this selects Neutral. Then APPLY the SPRING PARKING BRAKE by pushing the control knob **IN.** Then release the Travel/Service brake by pushing the hand lever forward (toward front of seat).

NOTE When **WORK MODE** is selected, the machine is designed to operate in low gear and high gear with front, rear or both axles engaged .

Shutting Down the Engine

This section describes the recommended procedure to shutdown the engine.

Normal Shutdown Procedure:

ALWAYS START AND END OPERATIONS WITH THE SPRING PARKING CONTROL BRAKE IN THE "APPLIED" POSITION (Push In the push/pull knob) AND **THE TRAVEL/SERVICE HAND BRAKE LEVER IN THE"RELEASED" POSITION** (push lever forward (toward front of seat)). Note the Parking Brake is also commonly referred to as the MAXI BRAKE CONTROL.

1. When shutting down the engine, the **SPRING PARKING BRAKE MUST BE APPLIED** (Knob Pushed IN) and the **TRAVEL/SERVICE BRAKE MUST BE RELEASED** (Hand Lever Forward (toward front of seat)).

2. Make sure all work components, such as the workheads, projector buggy, combo clamp frame, shadowboard assembly, receiver buggy are in the "raised" (travel) position and are secured in their safety locks. **NOTE:** It has been a common practice of some railroads to lower one workhead into the ballast as a safety precaution.

3. Move the throttle pushbutton to the **SLOW or IDLE** position.
   NOTE: Idle speed for this machine is 1000 rpm.

4. Ensure that the **GEAR SELECTOR** switch is set to the **NEUTRAL** position.

5. To prevent damage to the turbocharger, permit the engine to idle (cool down) for a minimum of 2 1/2 minutes.

6. Turn the key in the ignition switch to the **OFF** position. (counterclockwise). Remove the key.

7. Turn the main battery switch to the OFF position.

8. If the battery switch is left **ON**, the back up alarm will intermittently sound three short blasts to inform the operator of this condition.

Towing the Machine

This section describes the recommended procedure to TOW the MACHINE; WITH and WITHOUT the Engine Running Procedure:

WITH ENGINE RUNNING

1. Make sure you read *"Safety"*, before you attempt to move/travel the machine.

ALWAYS START AND END OPERATIONS WITH THE SPRING PARKING CONTROL BRAKE IN THE "APPLIED" POSITION (Push In the push/pull knob) AND **THE TRAVEL/SERVICE HAND BRAKE LEVER IN THE"RELEASED" POSITION** (push lever forward (toward front of seat)). Note the Parking Brake is also commonly referred to as the MAXI BRAKE CONTROL.

- **Maximum Towing Capacity 35,000 lbs.**
- **Braking Distances Will be Increased When Towing Another Vehicle.**
- **Adjust Travel Speed and Braking Accordingly.**

2. Make sure the machine engine is properly started (running), the hydraulic oil is warm and the air system has reached the normal operating pressure. (100 PSI)

3. Set the engine to a moderate speed (1200 to 1500 RPMs).

4. Make sure the machine is in the **TRAVEL MODE**

5. Make sure the front and rear gearbox and Travel direction are in NEUTRAL position.

6. Make sure all of the machine components, such as the workheads and buggies (projectors and receivers), are in the "locked up" position and are secured in their safety locks.

7. Carefully attach and secure the towing machine to the machine to be towed.

8. Apply the travel/service hand brake (pull lever rearward toward rear of seat) then release (pull out the push/pull knob) the Spring Parking Brake. The travel/service brake is located on the Operator's L/H arm panel and the Spring Parking Brake is located behind the R/H Operator's arm panel , Refer to Figure 2-3B and 1-2A, 1-2B and !-2C.

9. Check the air system pressure to be sure that there is sufficient pressure to release the parking brakes (60-70 PSI) and to apply the service brake as needed (90-110 PSI). If the brakes cannot be released with any pressure, they must be released mechanically.

10. Slowly release the travel/service brake lever when the towing machine starts to move.

11. Slowly apply the **TRAVEL/SERVICE BRAKE** lever when stopping.

12. After the machine comes to a complete STOP at the new location; APPLY the SPRING PARKING BRAKE by pushing the control knob **IN.** Then release the Travel/Service brake by pushing the hand lever forward (toward front of seat).

13. Disconnect the machine from the towing machine.

Procedure: WITHOUT ENGINE RUNNING and Computer OFF

1. Make sure all of the machine components, such as the workheads and buggies (projectors and receivers), are in the "locked up" position and are secured in their safety locks.

2. Attach or secure the machine to the towing machine.

3. Manually release the SPRING PARKING BRAKE springs.

   NOTE: Air from an external source could be used to release the Spring Parking Brakes. If air is NOT available the brakes can be released by Caging the chamber spring using a wrench or ratchet. See the instructions in Figure 2-7 below. **Use Extreme Caution.**

   CAGE BRAKE SPRING BY TURNING CAGING BOLT COUNTER CLOCKWISE UNTIL SPRING IS CAGED AND TORQUE TO A MAXIMUN 74 lbs.

   UNCAGE ALL BRAKE CHAMBER SPRING BY TURNING CAGING BOLT CLOCKWISE UNTIL TIGHT AND TORQUE TO 50-60 ft lbs.

4. Make sure the front and rear gearboxes are in NEUTRAL position. See Figure 2-6 Shift Dimensions diagram below. The neutral position is .95 inches (24.1 mm)

   NOTE: If required, use the towing machine to nudge the machine to be towed back and forth to jog the gearboxes into the neutral position.

5. Tow the machine to the new location; manually reapply or engage the SPRING PARKING BRAKE springs.

6. Disconnect the towed machine from the towing machine.

7. Chock the wheels on the machine that was towed.

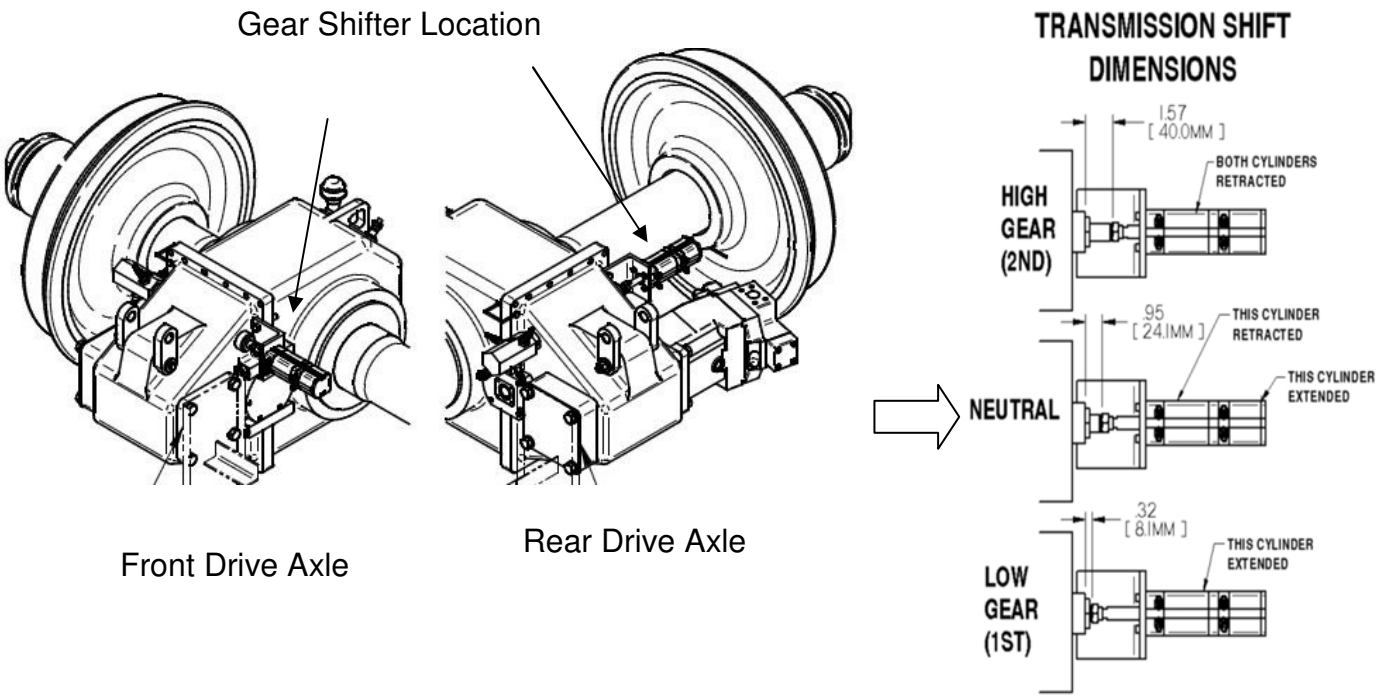

Figure 2-6

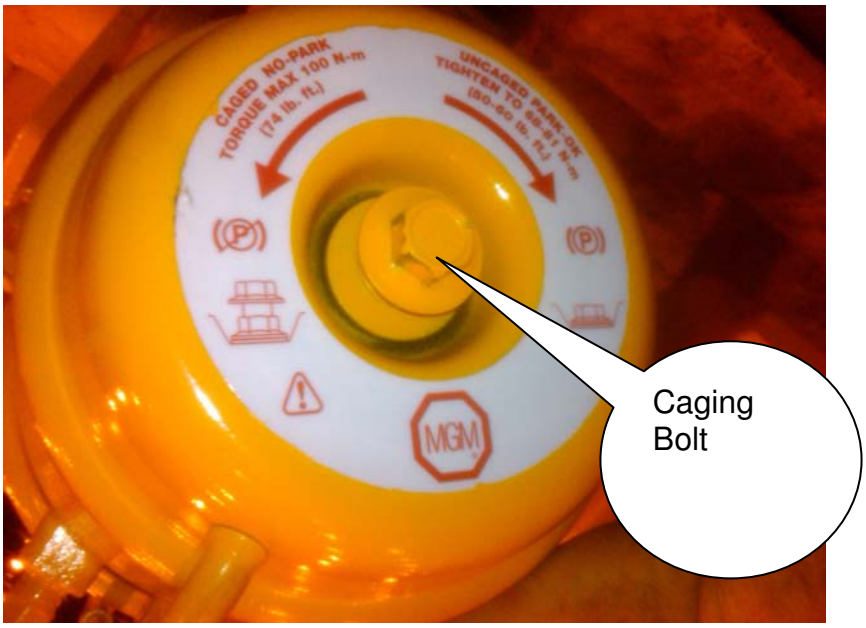

Figure 2-7

MACHINE CONTROLS - Work Mode

L/H Operators Arm Panel (Refer to figure 2-3C)

1. L/H Operators Keypad (See Fig 2-3C)
2. L/H Workhead Joystick
3. L/H Combo Clamp Frame Joystick
4. Horn Button
5. L/H Clamp Frame Slew
6. Wizard Button (manual squeeze in)
7. Electrical UP & DOWN Seat Control

Figure 2-8

L/H Workhead Joystick

- When the joystick is moved to the left, the left workhead moves laterally (traverse) to the left.
- When the joystick is moved to the right, the left workhead moves laterally (traverse) to the right.
- When the joystick is pushed forward (toward keypad), the left workhead lifts (upfeed) up to upper setting. Release and push forward again to bypass the upper string pot setting.
- When the joystick is pulled backward (away from keypad), the left workhead drops to and will stop at the lower string pot setting.

L/H Combo Clamp Frame Joystick

- When the joystick is moved to the left, the left combo clamp frame hook moves laterally to the left (OUT) to its outer limit switch.
- When the joystick is moved to the right, the hook moves laterally to the right (IN).
- When the joystick is pushed forward (toward keypad), this raises the left combo clamp frame hook to the upper limit switch setting. Release and push again to bypass the upper limit switch.
- When the joystick is pulled backward (away from keypad), this lowers the left combo clamp frame hook to its lower limit switch. Release and pull again to bypass the lower limit switch setting,

Seat Control Switch

Seat control switch permits operator to adjust the height of the operator seat.

R/H Operators Arm Panel - (Refer to figure 2-9 on next page)

1. R/H Operators Keypad
2. Cycle/Travel (FWD&REV) Joystick
3. R/H Workhead Joystick
4. R/H Combo Clamp Frame Joystick
5. R/H Clamp Frame Slew
6. Wizard Switch R/H (manual squeeze in)

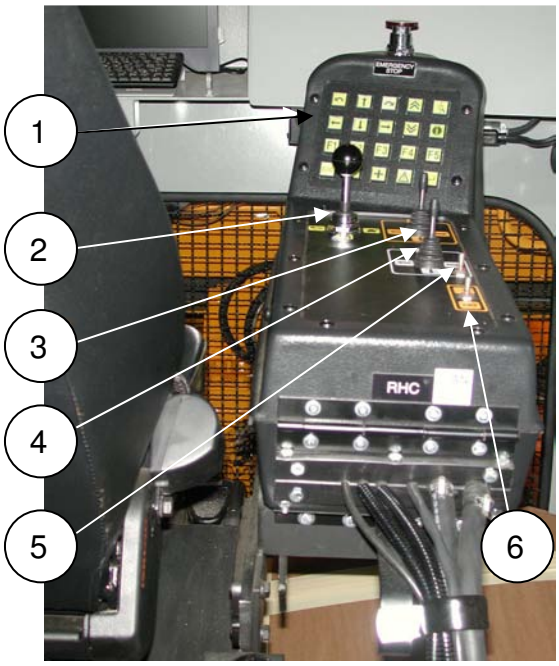

Figure 2-9

Cycle/Forward/Reverse/Workhead Joystick

- When the joystick is moved to the right, both workheads will rise or upfeed to the W/H upper string pot settings.
- When the joystick is moved to the left the machine travels in reverse.
- When the joystick is pushed forward (toward keypad), the machine travels forward.
- When the joystick is pulled backward (away from keypad), this starts **CYCLE**. (The foot switch located on the floor in front of the operator seat, is another method of starting cycle).

R/H Workhead Joystick

- When the joystick is moved to the right, the right workhead moves laterally (traverse) to the right (OUT).
- When the joystick is moved to the left, the right workhead moves laterally (traverse) to the left (IN).
- When the joystick is pushed forward (toward keypad), the right workhead lifts (upfeed) up to upper setting. Release and push forward again to bypass the upper string pot setting.
- When the joystick is pulled backward (away from keypad), the right workhead drops to the lower string pot setting.

R/H Combo Clamp Frame Joystick

- When the joystick is moved to the right, the right combo clamp frame hook moves laterally to the right (OUT) to its outer limit switch. Release and hit again will bypass the outer limit switch and will stay between end and outer limit switch.
- When the joystick is moved to the left, the hook moves laterally to the left (IN).

- When the joystick is pushed forward (toward keypad), this raises the right combo clamp frame hook, to upper limit switch. Release and hit again will bypass upper limit switch to lock or unlock.

- When the joystick is pulled backward (away from keypad), this lowers the right combo clamp frame hook to its lower limit switch, release and hit again will bypass the lower limit switch.

NOTE: If either the R/H or L/H clamps should slip off the rail and contact the upper limit switch while the auto underfoot lifting option is turned on, the hook will go out and down below the lower limit switch and come in under the base of the rail and lift, (squeeze in will temporarily be stopped during this process and forward indexing will not commence until the hook has returned to the lower limit switch).

CHAPTER 3
JUPITER II OPERATION

TABLE OF CONTENTS
JUPITER II OPERATION

CHAPTER 3

Jupiter Screens and Controls 3-1
Jupiter II Controls Overview 3-1
Face of Jupiter II – Home Panel 3-1

Controls 3-3
Operator Seat Consoles.....3-3
L/H Operator Keypad 3-4
Dual Function Keys 3-5
Left Combo Clamp Frame Slew (Forward/Reverse) 3-9
Right Combo Clamp Frame Slew (Forward/Reverse) 3-9
Wizard Switch 3-10
Work/Travel Mode.....3-12
Fallback Operation.....3-13
R/H Operator Keypad.....3-14
Cursor Group 3-15
Expanded Track View Group Keys 3-16
Expanded Track View 3-16

Main or Work Screen Components 3-18
Lift Indicator Panel 3-19
Super-elevation / Cross-level Indicator Panel 3-19
Distance/Milepost Indicator Panel 3-20
Main or Work View – Toolbar Sets 3-20
Receiver Indicators 3-21
Engine RPM Indicator 3-21
Machine System Alarms 3-21
Work Rate Indicator 3-21
Status Indicators Panel 3-21
Engine Status Panel 3-22
Alarm Panel 3-23
Surface Graph Panel – Main Screen 3-23
Throws Graph Panel – Main Screen 3-24
Superelevation Graph Panel – Main Screen 3-25
Line Graph Panel – Main Screen 3-26

TABLE OF CONTENTS
JUPITER II OPERATION

CHAPTER 3

First Main Toolbar Button Set 3-27
First Toolbar Button Set (Navigation) 3-27
Main or Work Screen Toolbar Buttons 3-29
First Toolbar Button Set – Main View.....3-29
F1 – The Quick Ramp Panel 3-29
F1 – Surface Quick Ramp Panel.....3-29
F2 – Throws Quick Ramp Panel 3-30
F3 – Super-elevation Quick-Ramp Panel 3-31
F2 – Surface Projector (System) ON/OFF Button 3-31
F3 – Liner Projector (System) ON/OFF Button 3-31
F4 – The Surface or Line Reference Selector Panel 3-32
F5 – Change Options Panel 3-33
Warm-up ON/OFF Mode 3-33
Switch Mode ON/OFF Mode 3-33
Auto Traction ON/OFF and Traction Delay Mode 3-35
Clamp Pressure Sustain ON/OFF Mode 3-35
Use Index Brake in Cycle ON/OFF Mode 3-35
Squeeze Waits On Lift ON/OFF Mode 3-36
Underfoot Lifting Feature 3-36
Line After Lift 3-36
Double Shift Feature.....3-36
Tie Marker Option 3-37
Movement and Battery Alarms 3-37

TABLE OF CONTENTS
JUPITER II OPERATION

CHAPTER 3

Second Main Toolbar Button Set 3-39
Second Toolbar Button Set (Navigation) 3-39
Second Toolbar Button Set – Main View.....3-43
F1 – Set Distance or Mile Post Panel 3-43
F2 – Diagnostics Menu 3-44
F1 – Combo Clamp Frame Diagnostic Panel 3-44
F2 – Engine Diagnostic Panel 3-44
F3 – Operator Keypad and Joystick Diagnostic Panel 3-45
F4 – Jupiter Diagnostic Screens 3-45
F3 – Calibration Menu 3-46
F1 – Calibration Readout Panel 3-46
F2 – Actuator Calibration Data Panel 3-47
F3 – Inclinometer Calibration Panel 3-49
F4 – Zero's Adjust Panel 3-49
F1 – Surface Zero Manual Adjust Panel 3-50
F2 - Surface Zero Manual Adjust Panel – SE Correct 3-50
F3 – Line Zero Manual Adjust Panel 3-51
F5 – Record Zero Calibration Panel 3-51
F4 – Change Graph Scales Panel 3-52
F5 – Workhead Configuration and Depth Control Panel 3-52
Workhead Indicators – Main View Status Panel 3-54

Third Main Toolbar Button Set 3-55
Third Toolbar Button Set (Navigation).....3-55
Third Toolbar Button Set – Main View.....3-57
F1 – Pusher Bars 3-57
F2 – Erase/Wipe Track Button 3-57
F3 – Insertion and Production Counters Panel 3-58
F5 – Work Start/Stop/Resume Panel 3-58

TABLE OF CONTENTS
JUPITER II OPERATION

CHAPTER 3

Expanded Track Overview 3-62
Expanded Track View 3-63

First Expanded Track View Toolbar Set 3-65
Expanded Track View Toolbar Set (Navigation) 3-65
Expanded Track View Toolbar Buttons 3-67
First Toolbar Button Set – Expanded Track View 3-67
Rubber Banding 3-67
F1 – Surface Lift Change Panel – Expanded Track View 3-68
F1 – Change Control Points 3-69
F2 – Surface Fit Panel Button 3-70
F1 – Surface Change - Minimum Lift 3-70
F2 – Surface Change - Maximum Lift 3-70
F3 – Low Point Compensation Percentage *3-70*
F4 – Delete a Control Point 3-70
F5 – Zoom this View Only 3-70
F3 – Surface Fit Sensitivity Button.....3-71
F4 – Delete a Control Point 3-71
F5 – Zoom this View Only 3-71
F2 – Lining Throws Change Panel – Expanded Track View 3-72
F1 – Change Control Points 3-72
F2 – Throws Change - Maximum Throw 3-72
F3 – Throws Change - Default Peg Spacing 3-73
F4 – Delete a Control Point 3-73
F5 – Zoom this View Only 3-73
F3 – Super-elevation/Cross-level Change Panel - Exp. Track View 3-73
F1 – Change Control Points 3-73
F2 – Super-elevation Compensation (Enable/Disable) 3-73
F3 – Super-elevation Change - Train Speed 3-74
F4 – Delete a Control Point 3-74
F5 – Zoom this View Only 3-74
F4 – Line Change Panel – Expanded Track View 3-74
F1 – Change Control Points 3-75
F2 – Best Fit Style or Method 3-75
F3 – Best Fit Sensitivity 3-76
F4 – Delete a Control Point 3-76
F5 – Zoom this View Only 3-77
F5 – Compressed Track View - Expanded Track View 3-77

TABLE OF CONTENTS
JUPITER II OPERATION

CHAPTER 3

Second Expanded Track View Toolbar Set 3-79
Expanded Track View Toolbar Set (Navigation) 3-79
Second Toolbar Set – Expanded Track View 3-81
F1 – Start/Stop Track Record Mode & Recording Toolbar Button Set ...3-81
F2 – Slow Record Speed 3-81
F3 – Start/Stop Fixed Point 3-82
F1 – Start Other Feature (Generic).....3-82
F2 – Start Switch / Turnout Feature 3-82
F3 – Start Road Crossing Feature 3-82
F4 – Start Bridge Feature 3-82
F5 – Not Used 3-82
Start Feature Marking.....3-82
F4 – Change Liner Reference While Recording 3-82
F1 – Line Reference 3-83
F2 – Manual Actuator Control 3-83
F3 – Surface Reference 3-83
F4 – Liner Buggy Bias Off 3-83
F5 – Mark Location 3-83
F5 – Work Start/Stop/Resume Panel 3-85
F1 – Ramp-In (Finding the Lights) 3-85
F2 – Resume Work 3-86
F3 – Ramp-Out 3-87

Third Expanded Track View Toolbar Set 3-88
Expanded Track View Toolbar Set (Navigation) 3-88
Third Toolbar Set – Expanded Track View 3-89
F1 – Track Recording File Panel 3-89
F2 – Erase/Wipe Track Button 3-89
F3 – Feature Marking - Table Entries 3-90
F4 – Recording Information Panel 3-91
F5 – Defaults Table Panel 3-91
Lift Default Values 3-92
Super-elevation/Cross-level Default Values 3-92
Throws Default Values 3-93
Line Default Values 3-93
F1 – 3rd Order Spirals Button 3-93
F2 – 5th Order Spirals Button 3-93
F3 – Time and Date Button 3-93

TABLE OF CONTENTS
JUPITER II OPERATION

CHAPTER 3

Help Information 3-94

Production Reporting (Option) 3-95
- Manual Entry Screen 3-96
- Selecting and Making Reports 3-96
- Production and Delay Modes 3-96

Tie Finder Auto Mag Option 3-98
- Tie Finder Toolbar (Navigation) 3-98
- Tie Finder Setup Menu Controls 3-99
  - Target Workhead Launch Speed Adjust Buttons 3-100
  - F1 – Tie Find Setup Panel 3-100
  - F2 – AutoMag Tamp Workhead/Tie Setup Button 3-101
    - F1 – Traction Bump Calibration Button 3-101
    - F2 – AutoMag Tamp Workhead Setup Button 3-101
  - F3 – AutoMag Tie Finding On/Off Button 3-105
  - F4 – Traction Duration Adjust Button 3-105
- Using Auto Tamp 3-107
- Turning Off Auto Tamp 3-110
- Joystick Functions (Auto Tamp Only) 3-110
- Track Region View Feature Option 3-111
- AutoMag Dual Antenna Calibration 3-113
- AutoMag Dual Antenna Adjustment 3-113

Jupiter Screens and Controls

Jupiter II Controls Overview

Jupiter II is a distributed I/O system developed by HTT to meet the demanding control requirements of railway maintenance equipment. The distributed I/O intelligent control system uses a Control Area Network (CAN) to communicate with other modules distributed around the machine. An industrial network cable is used to connect the individual modules together. Jupiter has many advanced features that are designed to make the operator's job easier. One such feature is "on-screen diagnostics" that make it possible for the operator or technician to identify and correct problems before they become disabling.

The Face of Jupiter II – Home Panel

The following Home Panel or Travel screen is the primary screen of Jupiter that the operator sees when Jupiter is turned on. Also see Figure 3-1A for models with the Tie Finder option.

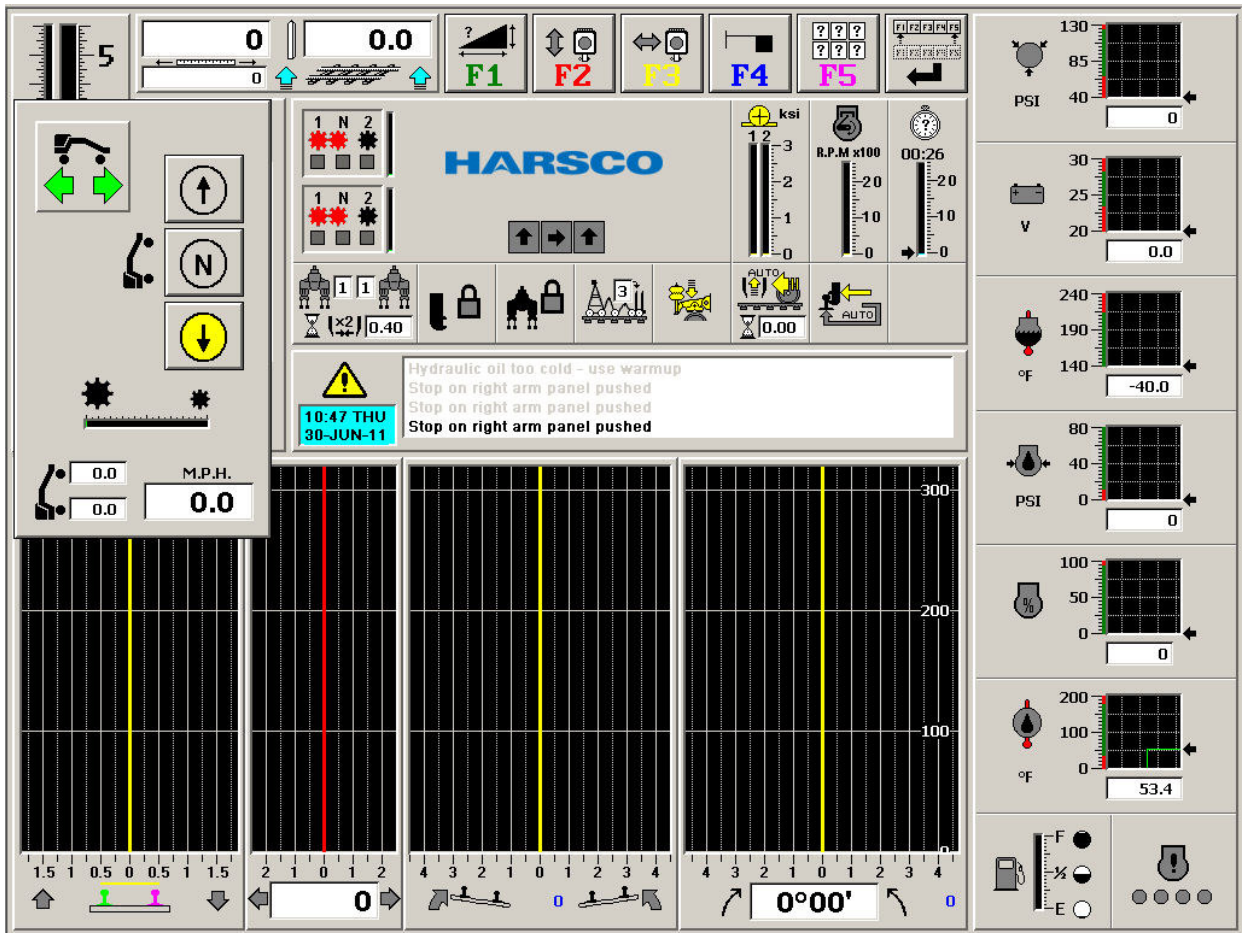

Figure 3-1Models w/o TieFinder

The track ahead, the operational status of the machine and the accuracy of results can all be clearly seen from this main panel. A high degree of emphasis has been given to presenting

information in a graphical and symbolic fashion so that an occasional momentary glance by the operator is all that is necessary while operating the machine.

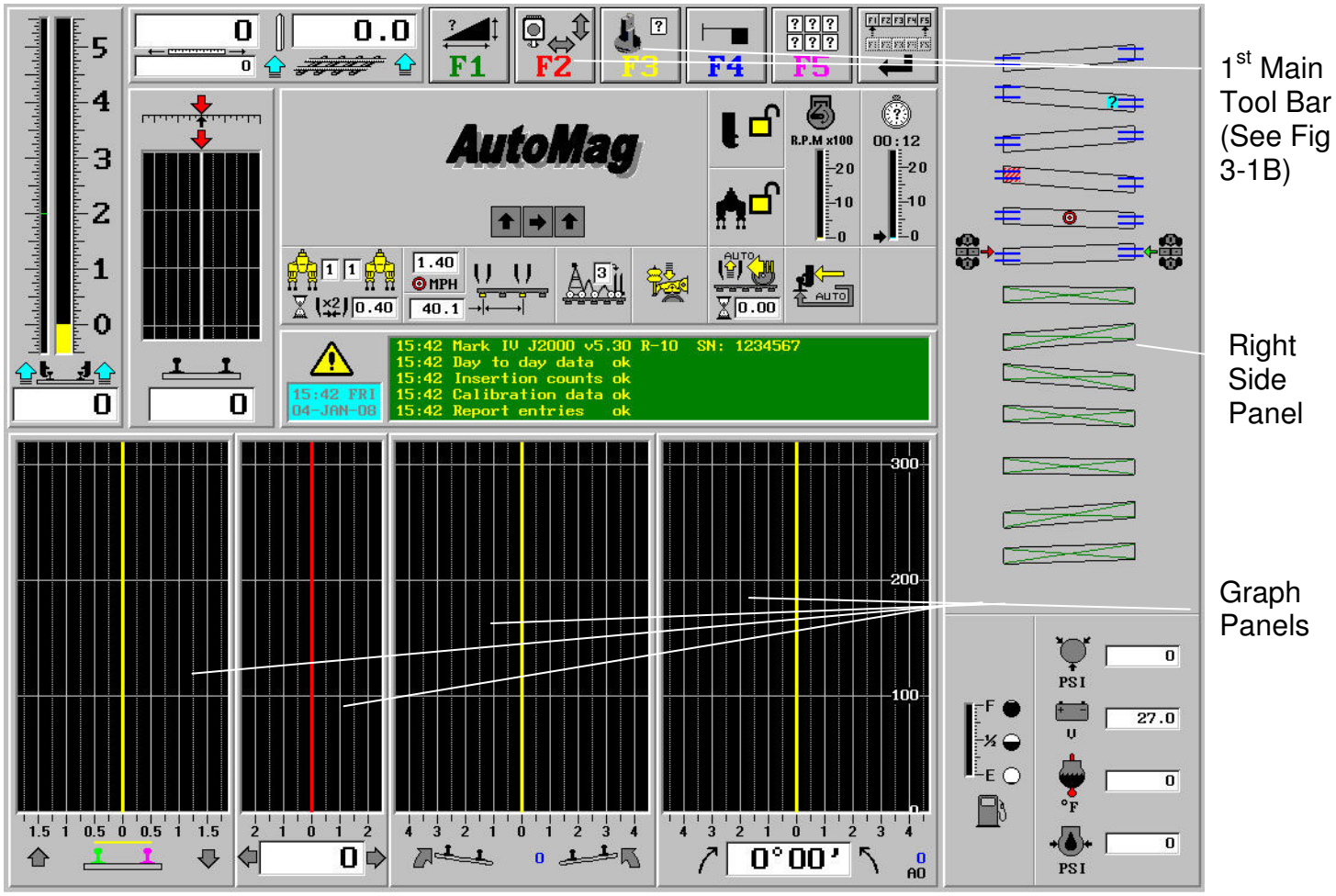

Figure 3-1A Models w/ TieFinder

The above Main Work screen is for MK IV models with the Tie Finder option. Please note that this screen is not only larger than the standard main work screen but feature Main Tool Bar changes for F2 and F3 , an expanded right side panel and larger graph panels.

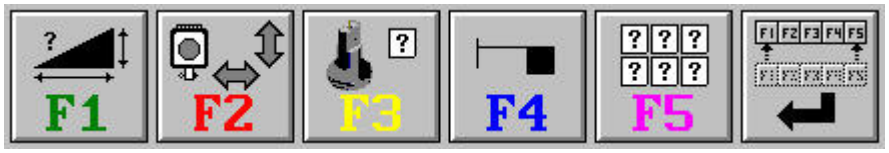

Figure 3-1B Models w/Tie Finder Option

L/H Operator Keypad

In work mode, the left hand arm panel keypad is used for direct manual control of the machine components such as the combo clamp frame and workheads. With MK IV HD the keys on the far left side of the keypad no longer serve two different functions depending on machine mode. Gear selection is done on the Jupiter Screens. These are now single control work functions such as auto-jack on and auto-jack release. (Refer to Figure 3-3.)

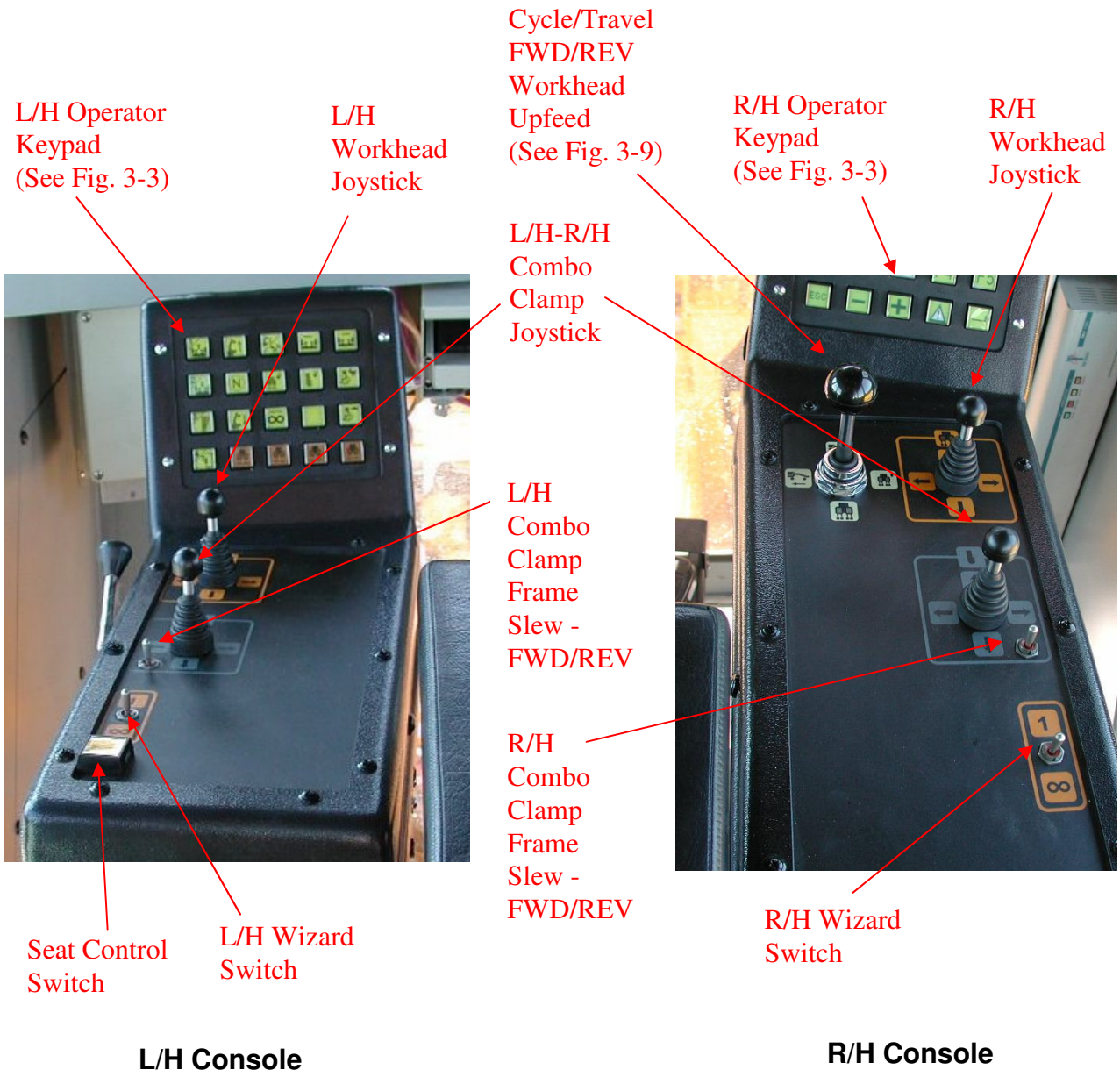

L/H Console **R/H Console**

Figure 3-2

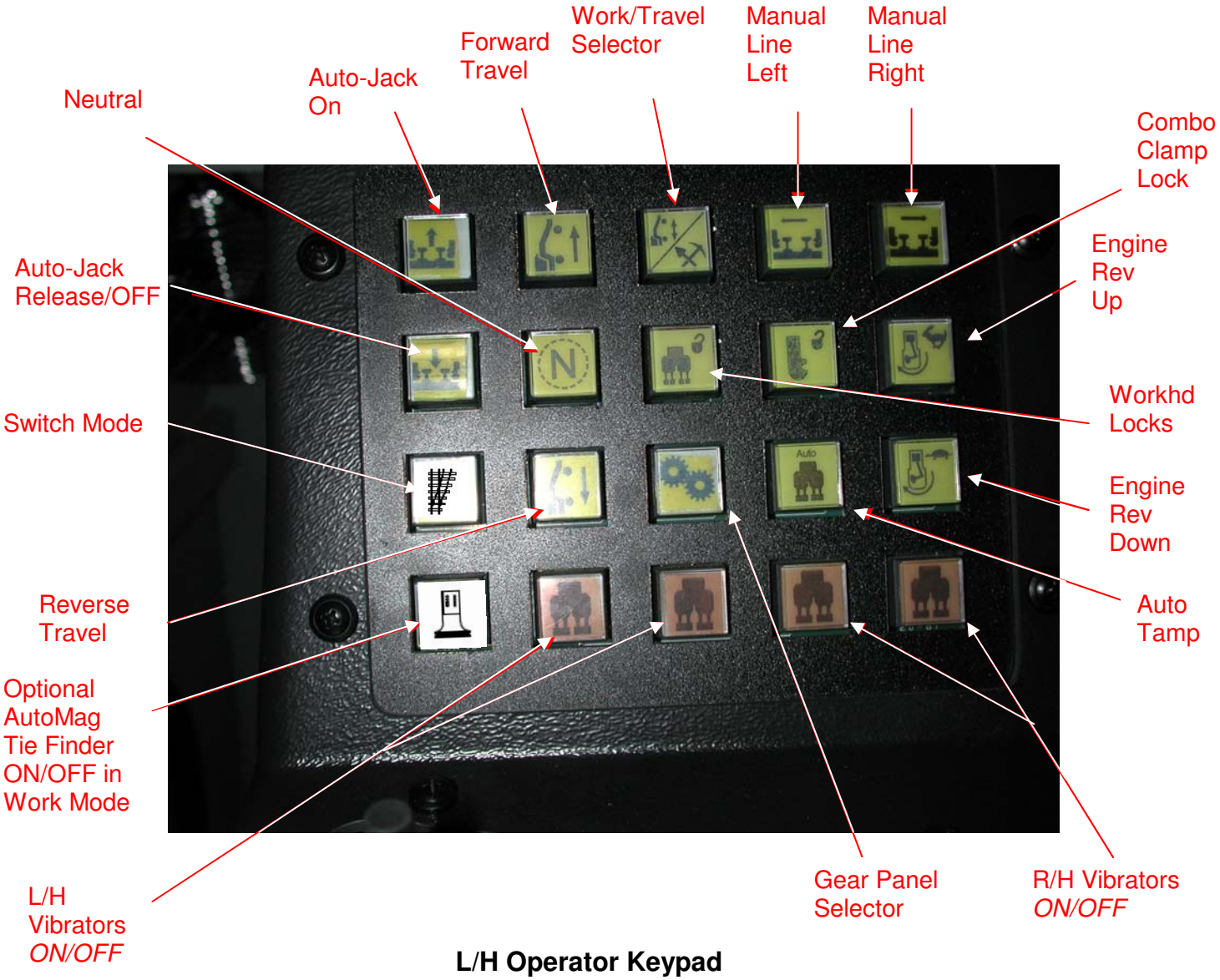

L/H Operator Keypad
Figure 3-3

NOTE: Refer to the 2 Supplement pages following 3-9 for updated instructions concerning the operation of the Work/Travel Mode switch.

Function Switches (Keyes)

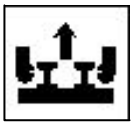

Autojack On (Work Mode)

Press this key to jack, line and HOLD the track. If this key is released before jacking is complete, lifting will stop before the desired lift has been reached. When lifting a turnout rail in a switch, exercise caution, as the shadowboard is not on this rail. If the turnout rail becomes detached from the tie, release the AUTO JACK button to stop lifting. Re-pressing the key will cause interrupted lifting to resume. This key performs the same function in both SWITCH and PRODUCTION modes. NOTE: In Production mode, forward travel will also release the track. However, in Switch mode, the autojack release button must be pressed to release the track.

NOTE: This key should be used on any initial start up of lifting and/or lining.

While the track is being held, workheads can be individually cycled and moved laterally to tamp the tie in all the desired positions before releasing the track.

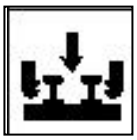

Autojack Off/Release (Work Mode)

Press AUTO JACK RELEASE to release the track after jacking via the AUTOJACK button. If this button is held, the hooks will downfeed to the lower limit switches and out to the outer limit switches.

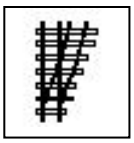

Switch Mode (Work Mode)

Press this Switch key to activate switch mode. This key toggles between Production and Switch modes.

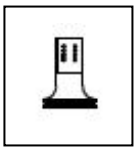

Optional AutoMag Tie Finder ON/OFF (Work Mode)

Press this Switch key to turn the Automag Tie Finder ON/OFF in work mode.

Forward Travel

Press this key to select the **FORWARD** direction of travel. **Use only in travel mode.**

Neutral

Press this key to place the transmissions in NEUTRAL.

Reverse Travel

Press this key to select the **REVERSE** direction of travel. **Use only in travel mode.**

Left Vibrators *(ON/OFF Switch)*

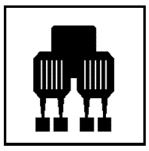

Press this key to toggle the status of the left workhead vibrators on/off. Pressing EITHER of the two most left workhead keys will toggle both vibrators for the left side of the machine. *(Does not apply to split tool machines)*

Work/Travel Mode

NOTE: Refer to the following 2 Supplement pages for updated instructions concerning the operation of the Work/Travel Mode switch shown below.

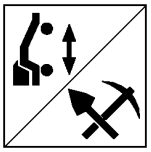

Press this key to toggle between the WORK and TRAVEL modes. Pressing the button IN places the machine in WORK MODE. If the button is out, the machine is in TRAVEL mode. *(Does not apply to split tool machines)*

Workhead Locks

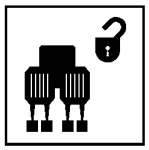

(Used to Lock Workheads for Travel and Unlock for Work)

Pressing this key toggles the status of the workhead locks. If the workhead locks are open, the indicator bulb on the monitor will be lit.

Gear Shift Panel Selector

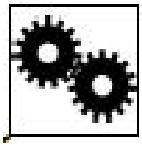

Press this key to display the Gear Shift Panel.

Combo Clamp Frame Manual Line (Left)

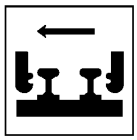

While this key is held, the clamp frame will be manually moved to the operator's left.

Combo Clamp Frame Locks

Pressing this key toggles the status of the clamp frame locks. If the clamp frame locks are open, the indicator bulb on the monitor will be lit.

(Used to Lock the Combo Clamp for Travel and Unlock for Work)

Auto Tamp

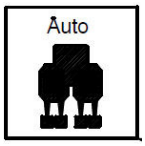

Press this key to enable or disable the AUTOMATIC TAMPING feature.

Right Vibrators *(ON/OFF Switch)*

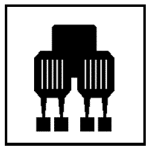

Press this key to toggle the status of the right workhead vibrators on/off. Pressing EITHER of the two most right workhead keys will toggle both vibrators for the right side of the machine. *(Does not apply to split tool machines)*

Combo Clamp Frame Manual Line (Right)

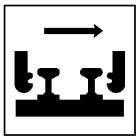

While this key is held, the clamp frame will be manually moved to the operator's right.

Engine Rev. -Up

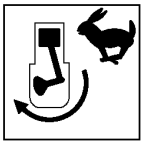

Press this key to **INCREASE** engine RPM.
(NOTE: Max. =2100 RPM - Min.=1000 RPM)

Engine Rev. -Down

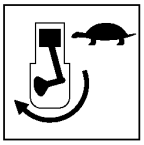

Press this key to **DECREASE** engine RPM.
(NOTE: Max. =2100 RPM - Min.=1000 RPM)

Right Vibrators *(ON/OFF Switch)*

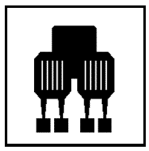

Press this key to toggle the status of the right workhead vibrators on/off. Pressing EITHER of the two most right workhead keys will toggle both vibrators for the right side of the machine. *(Does not apply to split tool machines)*

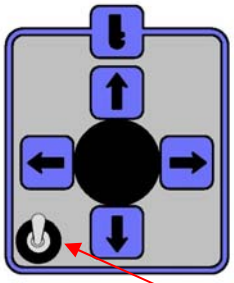

Figure 3-4

Forward Position

L/H Combo Clamp Frame Slew (Forward)

Pushing the toggle switch forward slews the *left side* of the clamp frame **forward** (away from operator) until the switch is released. The toggle switch is located on the *L/H Arm Console.* See figure 3-2.

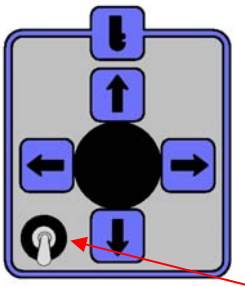

Figure 3-5

Reverse Position

L/H Combo Clamp Frame Slew (Reverse)

Pulling the toggle switch backwards slews the *left side* of the clamp frame in the **reverse** direction (toward operator) until the switch is released. The toggle switch is located on the *L/H Arm Console.* See figure 3-2.

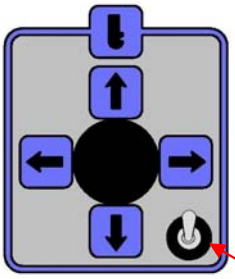

Figure 3-6

Forward Position

R/H Combo Clamp Frame Slew (Forward)

Pushing the toggle switch forward slews the *right side* of the clamp frame **forward** (away from operator) until the switch is released. The toggle switch is located on the *R/H Arm Console.* See figure 3-2.

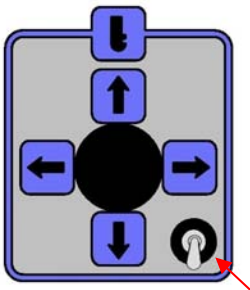

Figure 3-7

Reverse Position

R/H Combo Clamp Frame Slew (Reverse)

Pulling the toggle switch backwards slews the right side of the clamp frame in the reverse direction (toward operator) until the switch is released. The toggle switch is located on the R/H Arm Console. See figure 3-2.

WIZZARD SWITCH

This section describes the function and proper use of the *wizard switch*. The *wizard switch* is located on both left and right arm consoles. Refer to figure 3-8 (next page).

Wizard Switch Function

Hold either wizard switch in the 1 position *AND*:

1. Push either workhead joystick forward and the corresponding workhead will squeeze out until the workhead joystick is released.
2. Pull either workhead joystick back and the corresponding workhead will squeeze in until the workhead joystick is released.

Wizard Switch
(Refer to Figure 3-8 on next page)

Hold either wizard switch in the **position *AND*:**

1. Push either workhead joystick forward and *all* workheads will squeeze out until the workhead joystick is released.
2. Pull either workhead joystick back and *all* workheads will squeeze in until the workhead joystick is released.
3. If held while the workheads are downfeeding, wiggle squeeze will be initiated for the current cycle only. Wiggle squeeze is a feature to help the workhead penetrate in cemented ballast by alternately squeezing in and out for very short periods of time.
4. If held while squeezing in, squeeze sustain will be initiated for the current cycle only. Squeeze sustain will ignore the squeeze pressure setting and squeeze by the long timer. This feature would be used where additional squeeze time is desired, such as in fouled ballast.

The squeeze in / out feature may be used to partially squeeze-in one or all workheads before initiating cycle to clear tightly spaced or slightly skewed ties

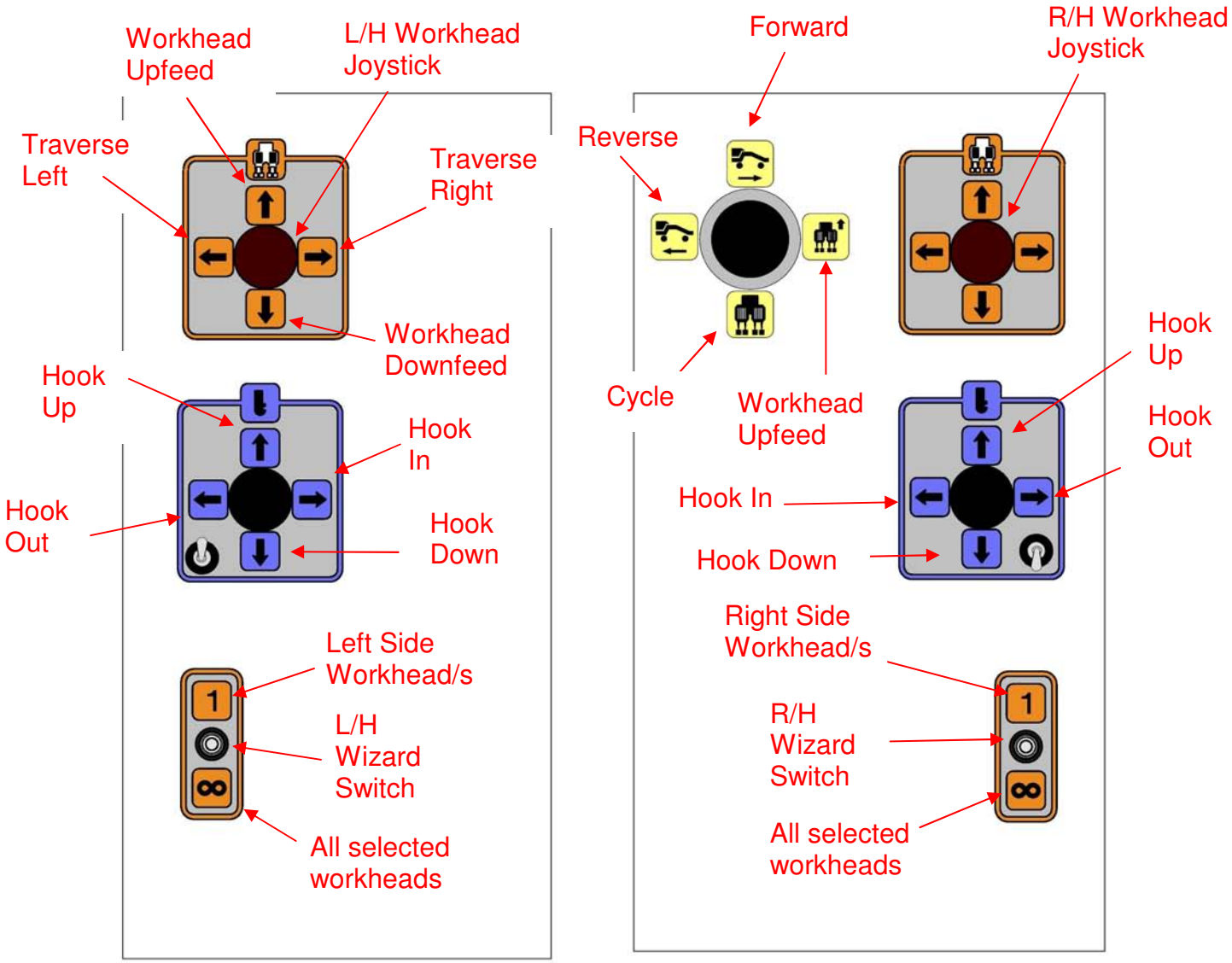

L/H Arm Console **R/H Arm Console**

Figure 3-8

Work/Travel Mode

When the Work/Travel button on the left-hand keypad (Figure 1) is pressed while in Travel mode, a Work/Travel Confirmation Panel (Figure 2) will be displayed, verifying the operator's intent to leave the Travel mode and enter Work mode or vise versa.

Figure 1 – Work/Travel keypad button

Confirmation Panel

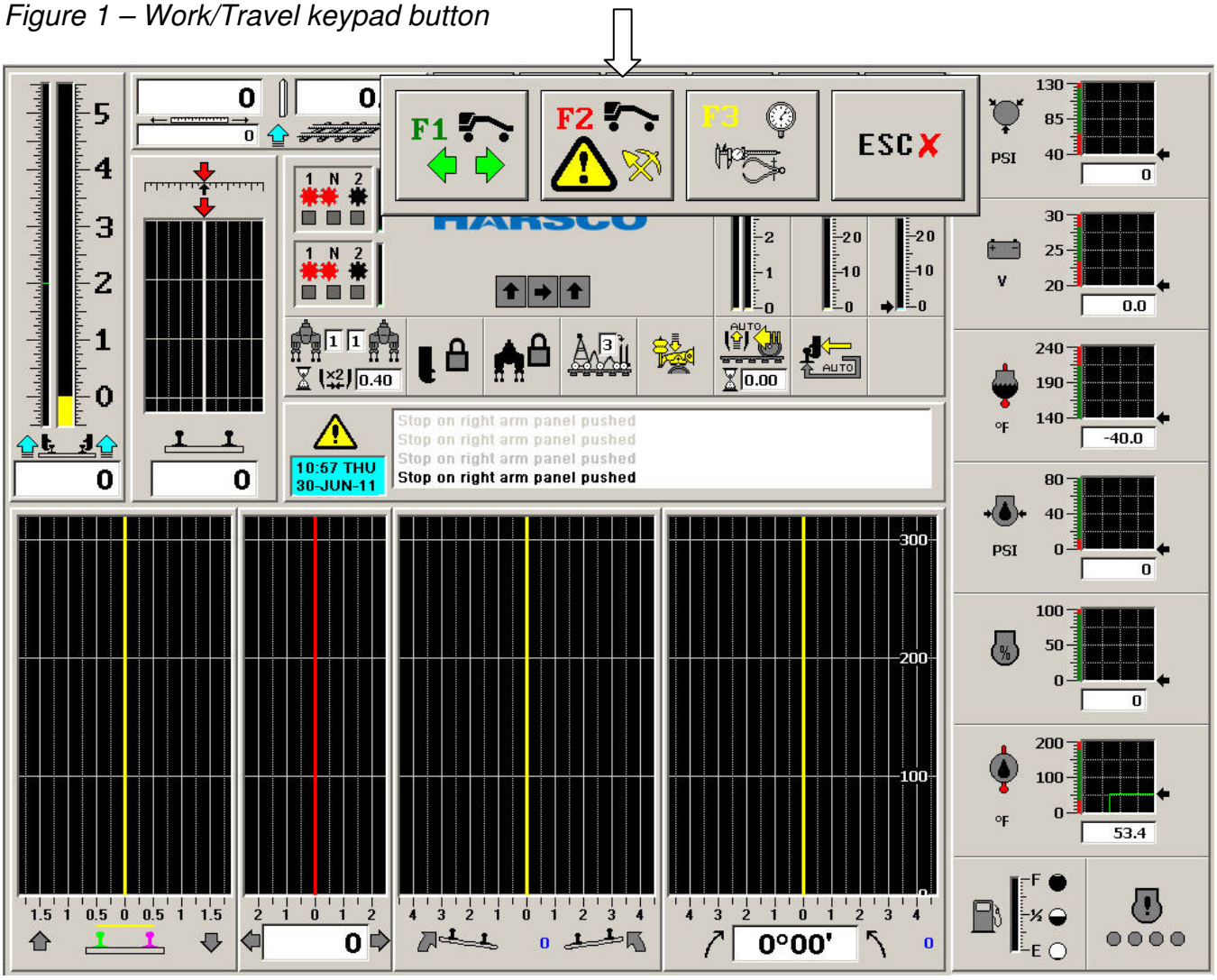

Figure 2 – Home Screen with Trave/Workl Confirmation Panel displayed

This panel requires the operator to press the F2 key to transition the machine to Work mode. Pressing the ESCAPE key will keep the machine in Travel mode. If neither key is pressed, the panel will time-out and be automatically removed from the screen, leaving the machine in Travel mode.

Other features of the work/travel mode transition include a requirement that when the Work/Travel button is pressed, no other keypad or joystick inputs are simultaneously made. Similarly, when the ENTER key is pressed on the Work Confirmation Panel, no other inputs can be simultaneously made. In the event one of these inputs is made, one of the following alarm messages will be issued: *"Multiple inputs made: press Work button only"* or *"Multiple inputs made: press ENTER key only"*.

To assist the operator in diagnosing this scenario, any work-related operator input that is made while in travel mode will result in a short alarm beep and the following alarm message: "*Place machine in work to use this device"*.

When in work mode, pressing the Work/Travel keypad button will put the machine in travel mode without requiring the confirmation panel.

Fallback Operation

The same sequence and requirements of operation are used to control the machine in fallback mode (used if the JAMbox is not functional but the network is). This includes the timeout period between the consecutive key presses. There is of course no visible panel in this instance, but an alarm will sound if additional inputs are already made when the Work/Travel or Enter keys are pressed. Similarly, the beeper will indicate whether the machine is in travel when a work-related input is made.

The R/H Operator Keypad

The right hand keypad provides graphical operator input (rubber banding) without using a pointing device such as a mouse.

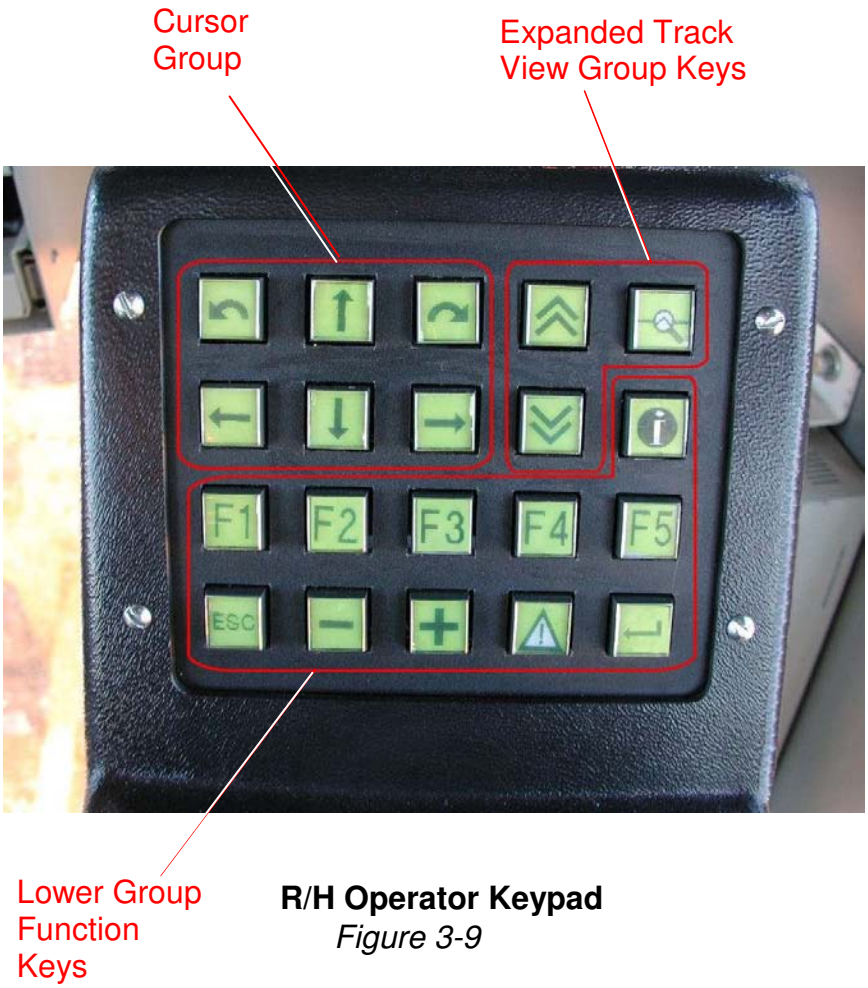

R/H Operator Keypad
Figure 3-9

One of the most important keys on this keypad is the help key which is in the right column of keys, second from the top (with the international "**i**" symbol for information). Regardless of the panel, menu or dialog box that is open at the time, pressing this key will give you help information relevant to the situation. See the section on help near the end of this chapter, *page 3-89*.

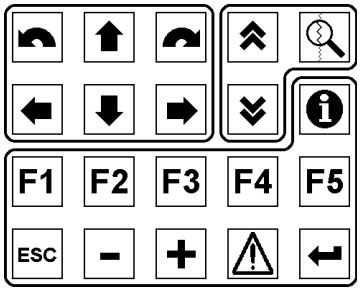

Many of the keys on the right keypad appear similar to keys on the PC keyboard (F1 through F5, ESC, ENTER and so on). A feature of System V is that almost all of the keys on the right keypad have a counterpart on the PC keyboard and either may be used for convenience.

On the screen, the function buttons (F1-F5) directly activate one of the five "toolbar" buttons seen at the top right hand side of the screen. Pressing the ENTER key replaces the primary toolbar buttons with a second set of toolbar buttons. There are three sets of main toolbar buttons that are described in detail starting at page 3-25.

Pressing ENTER cycles between the three toolbar sets. After a toolbar set has been selected, it remains selected until a time-out elapses (7.5 seconds) without selecting any of the available functions. After this time-out occurs, the toolbar buttons revert to the first set. This helps keep the operation of the function buttons on the right keypad consistent while the machine is being operated so that the operator does not have to look at the screen in order to invoke a frequently used operation. The time-out allows more than one button in a toolbar set to be used before automatically reverting to the first set.

The Cursor Group

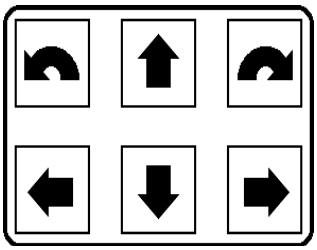

The six buttons at the top left of the right keypad are known as the cursor group and are used for two different purposes.

Normally these keys control manual adjustments to lift, line and superelevation. Manual corrections of this type are typically additive to any automated ramping or "best fit" control of the corresponding graph so that the operator remains in complete control at all times. As will be seen later, these keys are also extensively used for selecting and dragging best-fit and ramp lines, *page 3-59*. For now, the operation of these keys during normal tamping only will be discussed.

Each time a lift (vertical arrow) key is pressed, lift at the shadowboard will be changed by 1/32 in. How this change is displayed on the screen will depend on the manner in which surface is being applied. When the machine is automatically controlling surface according to an established plan, the change will be shown on the left slider of the lift panel. When not working according to an established plan for lift, the change will be seen in the right (yellow) slider and in the numerical display just below the surface sliders.

Each time a shift (horizontal arrow) key is pressed, throws at the shadowboard will be changed by 1/16 in. and the manual display at the bottom of the *Throws Panel* will change accordingly.

The left and right curved arrow buttons in this group are used to apply superelevation or crosslevel correction by 1/32 in. for each button press. The correction is displayed in the crosslevel panel (when top red correction arrow is in line with center black arrow the correction is zero). The rotation implied by the arrows on these keys also indicates the effect they have on superelevation (when looking forward). The top left arrow button moves the red crosslevel correction arrow to the left which will raise the right rail. The top right arrow button moves the red crosslevel correction arrow to the right, and will raise the left rail. Note, that after a correction is applied using these keys, the effect of the correction will not be seen by the inclinometer (the green trace in the crosslevel panel) until the machine has worked approximately 15 feet, which is the distance between the shadowboard (where the correction is applied) and the receiver buggy (where the inclinometer is mounted).

The Expanded Track View Group Keys

When the operator wishes to automate the control of Lift, Line or Superelevation ahead of the machine, the first step is to expand the track view at the bottom of the screen. The key that does this is the Expanded Track View Key (magnifying glass) at the top right of the operator's R/H keypad.

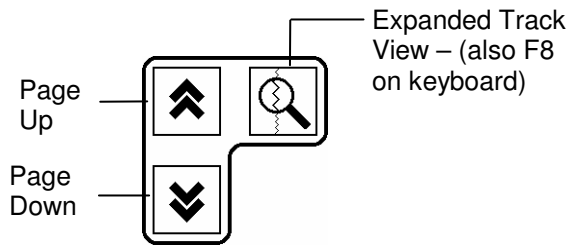

Pressing the expanded track view key again returns the screen to the main or work track view. The track distance seen on the main or work screen is 150 feet. When the track graph is expanded, 450 feet of track ahead of the machine is visible.

To the left of the expanded track view key are two keys with "corporal stripes" (page up and page down) which provide moving from transition point to transition point of recorded data. In the expanded track view the operator can enter or modify any ramps, record track, apply or change "best fits" to recordings, enter or change fixed points or recall previous recordings from the machine's filing system (memory). The operator can expand the track view at any time, either to obtain access to functionality available in the expanded view or to simply "look ahead" momentarily while tamping. Another example of a powerful System V feature is that the operator can manually change the best fit information of a curve by dragging (rubber banding) control points on the best fit line.

The Expanded Track View

The expanded track view is selected by using the Expanded Track View key (magnifying glass) located on the Operators R/H Arm Panel keypad, 450 feet of track can be seen at one time. It is also possible to compress hundreds of feet onto this view (F5 first toolbar, expanded track view, *page 3-59*) so that complete curves or recordings can be seen at once. Each of the panels that make up this view (Surface, Throws, Superelevation and Line) are described in detail later, *page 3-58*.

If no track has been recorded (or recalled from memory) since the machine was turned on, the Surface, Throws, Superelevation and Line fit lines are straight vertical lines positioned on zero. If desired, the operator can select and drag (rubber band) these lines to create work-in, work-out ramps or any other desired control, if track is to be tamped without previously recording it. This is done in exactly the same way that fit and throw lines are modified after recording and "best-fitting". **Note:** The machine (after hunting light) will always Ramp up or down to the machine default.

Continued on Next Page

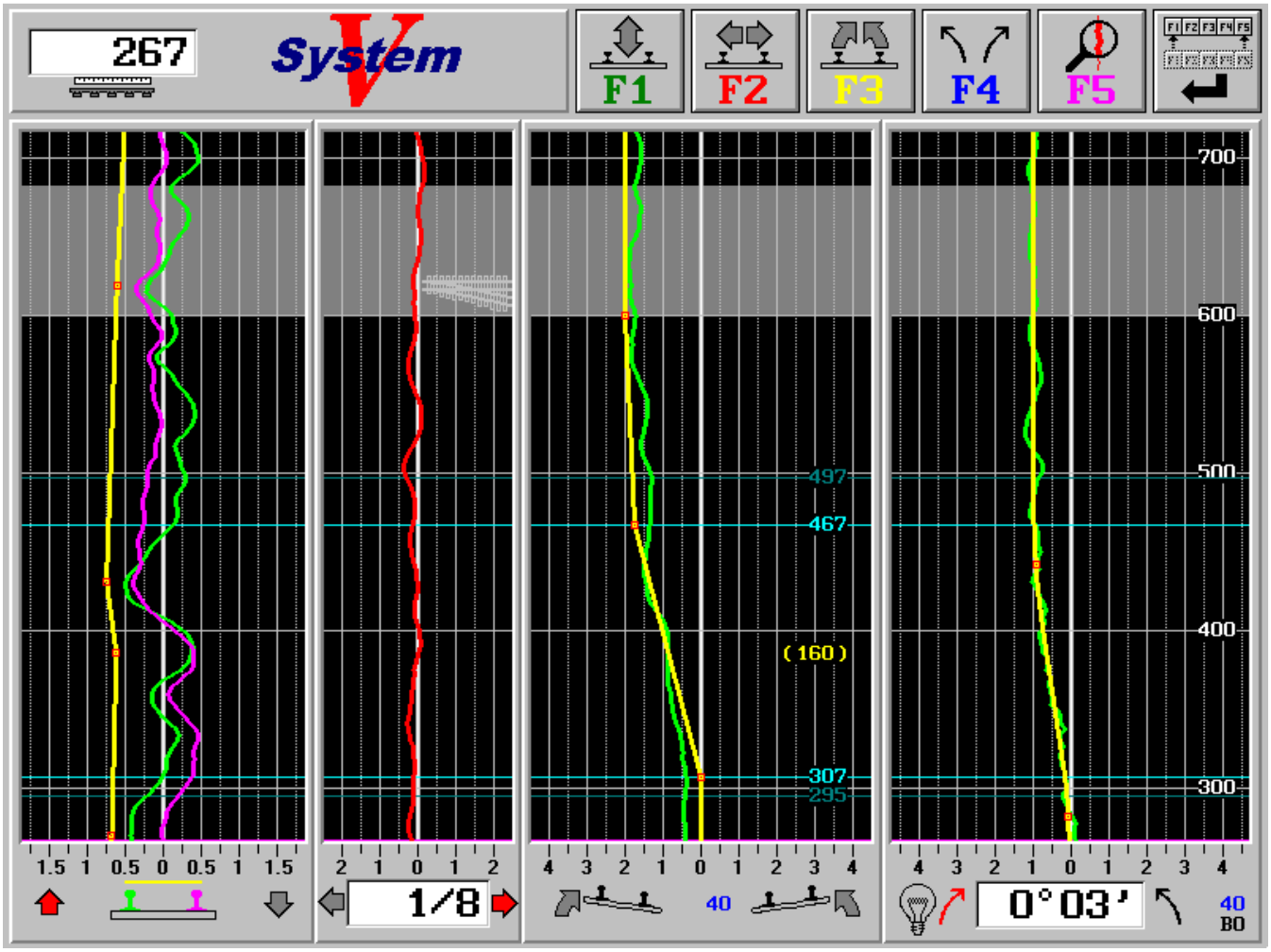

EXPANDED TRACK VIEW

The Expanded Track View has a different primary toolbar button set from the Main or Work screen. In this primary set, buttons F1 through F4 select Surface, Throws, Superelevation and Line for modification respectively. The F5 button toggles between the compressed view (if available) and the normal expanded track view (450 feet of track is visible).
The expanded track view has three toolbar button sets. The ENTER key cycles between these in the same way as it cycles the three toolbar sets available from the main or work screen. Some of the main screen toolbar buttons are duplicated in the expanded track view sets for convenience (turning projectors on and off, changing reference and so on).

Main or Work Screen Components

The System V main or work screen is composed of several panels, which are updated continuously as the machine is operated. Each panel is devoted to a particular function or group of functions, which are discussed below.

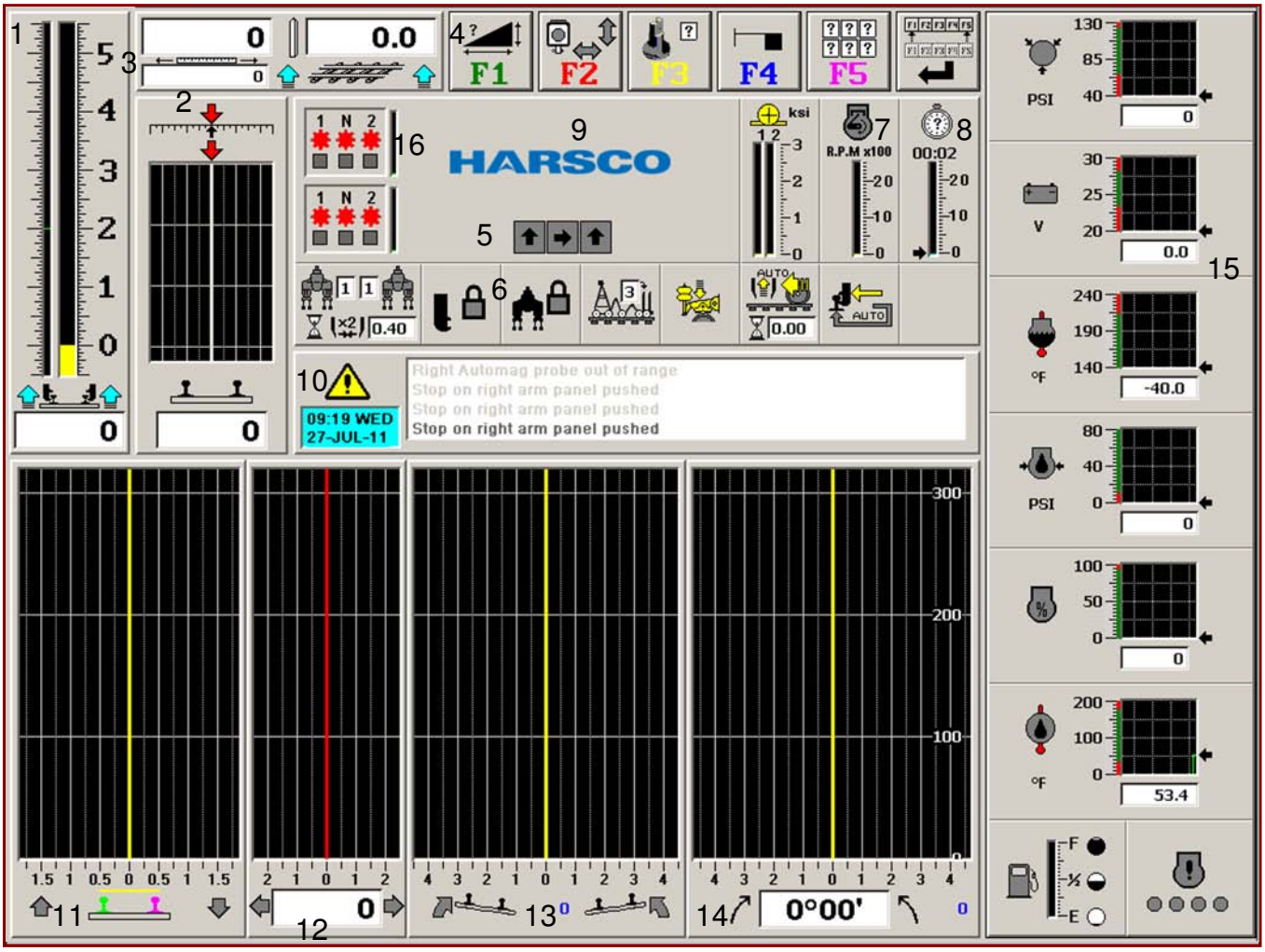

Items 5, 6, 7. 8 and 16 are part of the Status Panel.

(1)	**The Lift Panel**	(9)	**The Status Panel**
(2)	**The Superelevation/Crosslevel Panel**	(10)	**The Alarm Panel**
(3)	**The Distance and Milepost Panel**	(11)	**The Surface Graph Panel**
(4)	**The Main or Work, 1st Toolbar Set**	(12)	**The Throws Graph Panel**
(5)	**The Surface & Liner Indicators**	(13)	**The Superelevation Graph Panel**
(6)	**Clamp & Workhead Lock Indicators**	(14)	**The Line Graph Panel**
(7)	**The Engine RPM Indicator**	(15)	**The Engine Status Panel**
(8)	**The Work Rate Indicator**	(16)	**Gearbox Engagement (Front & Rear)**

The Lift indicator Panel

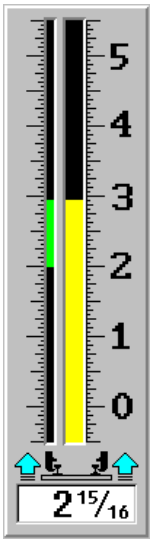

The lift panel is located on the far left of the main screen. There are two "thermometer" style displays showing lift in 1/16 inch increments. The right hand yellow "slider" gives the current lift being applied. The left hand slider shows the total amount of any manual correction the operator has applied during any planned ramps, (a green bar is an increase, a red bar is a decrease).

Lift displayed by the yellow slider is also displayed numerically in an information box at the bottom of the lift window. When the lift value exceeds the range of the thermometer, the value must be read from this box. Located below the lift sliders is a symbol indicating the currently applied lift. The blue arrows point upward when positive lift is applied; conversely, the blue arrows point downward when negative lift is applied. The numeric display does not indicate the sign, only the magnitude of applied lift in the indicated direction.

When using optional prerecorded surface data, System V can automatically vary the lift to compensate for errors at the projector, to minimize lift and to automatically work into and out of fixed points (I.E. bridge) . The operator retains full control at all times and may increase or decrease the value of lift being applied by the computer. Note, such adjustments will show in the left hand slider.

The lift expressed by the yellow slider corresponds to the lift that will be applied on the next cycle to the track. When the track being tamped has not been prerecorded, this value will be an average value and will exclude variations in lift arising from track errors. When System V is automatically controlling lift from prerecorded surface data, the indicated lift value should accurately reflect actual lift for a properly calibrated machine in good conditions. Poor conditions such as inadequate or foul ballast may result in settlement that would result in the actual lift being less than the indicated value.

The Superelevation/Crosslevel Indicator Panel

At the top of the superelevation or crosslevel window is a red arrow and scale that indicates the amount of crosslevel correction, in 1/16 inch increments, that has been entered by the operator. The operator can adjust this value when experiencing a sustained error that results in superelevation at the inclinometer. The superelevation correction keys (curved arrows) are located on the right hand keypad and change the value by 1/32 inch per press. The red arrow at the top of the panel indicates the operator's superelevation or crosslevel adjustments.

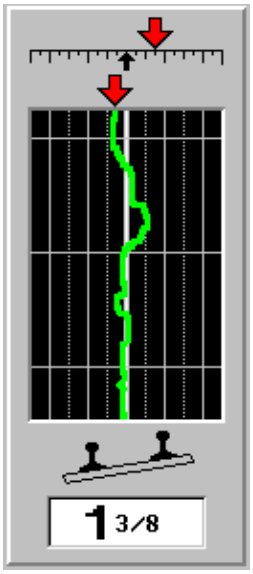

The 'strip chart' type graph in the center of the window displays a plot of superelevation or crosslevel with respect to design or desired crosslevel. When the crosslevel at the C point (receivers) exactly matches the desired crosslevel, there will be a green trace down the center of the graph. There is a delay of about 15 feet in the display of corrections to crosslevel. The scale is divided in 50 foot increments and displays a total of 150 feet of track behind C point (receivers). The white information box under the superelevation strip chart indicates the design

or desired superelevation value at the shadowboard. The design value will remain steady unless in a spiral or superelevation ramp.

The Distance/Milepost Indicator Panel

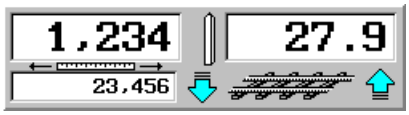

The distance window displays the distance moved while working, along with the milepost position. The distance window appears on both the main screen and the expanded track view. The larger distance box (upper left on panel) is where the distance is automatically set to zero at the start of each new recording. The auxiliary distance box, lower left with small digits, is used to read accumulative footage and should be zeroed at the start of the day. At the discretion of the operator, this distance can be used to accumulate track tamped or to synchronize with line-side features where location is marked in feet (or ignored completely). The values displayed are updated by a distance wheel when the machine is in work mode; or, by the front transmission sensors when the machine is in travel mode.

Like the footage counter, the auxiliary distance counter can be set to count down with forward movement as indicated by the adjacent cyan up/down arrow on the distance panel. The set distance menu (F1 on the second toolbar of the main screen) accommodates the auxiliary distance box as follows:

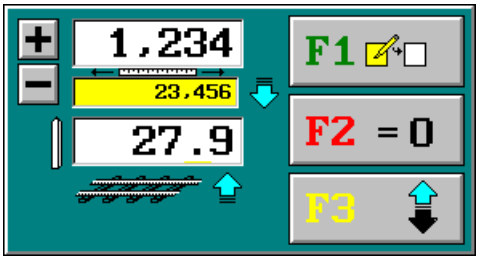

The F1 button selects one of three fields to work with. The F2 button will set the selected (highlighted) field to zero. The F3 button selects the counting direction for the selected field and is therefore disabled when the normal footage is selected (which only counts up in the forward direction).

Main or Work View - Toolbar Sets

When the computer initially starts up, the first toolbar set below will be displayed.

1st ⇨

w/o Tie Finder

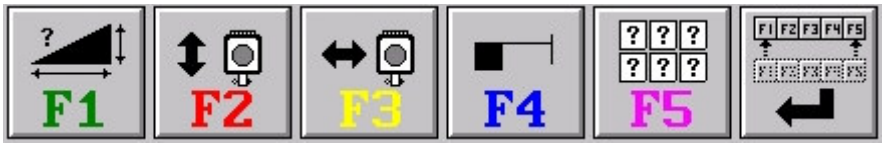

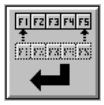

w/ Tie Finder
(See Append D)

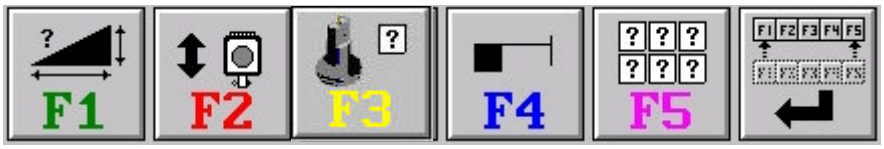

By pressing the “ENTER” key, the second toolbar set will be displayed as below.

2nd ⇨

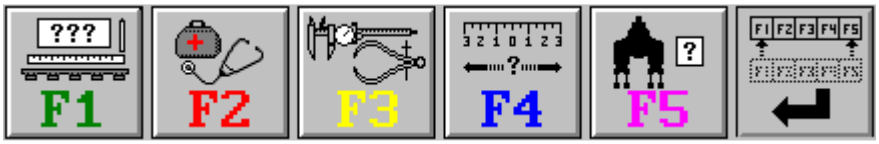

Again, pressing the "ENTER" key will display the third and last main toolbar set (see following page).

3rd ⇨

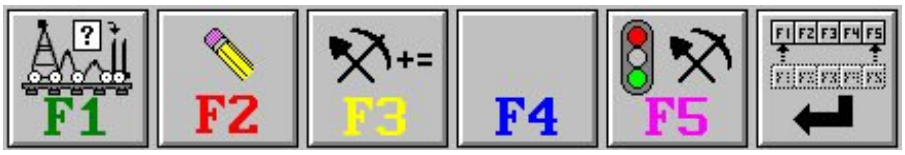

The Receiver Indicators *(See Status Panel)*

While the projector(s) are on, the receiver indicators reveal the status of the beams (cut/uncut) as seen at the corresponding receiver. Shown are the two surface receiver indicators on the sides and the lining receiver indicator in the center. The arrow for the lining receiver indicator (center) changes direction according to the lining reference selected.

The Engine RPM Indicator *(See Status Panel)*

The on screen display of engine RPM is used for information only.

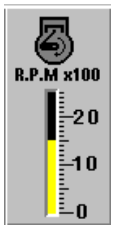

NOTE: The engine symbol in the tach display will turn red if the engine speed is less than 500 RPM or greater than 2500 RPM.

The Machine System Alarms

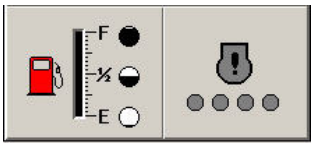

The Computer monitors various machine and engine functions such as system air pressure, diesel fuel level, engine oil pressure, engine water temperature and the status of the engine charging system. See the engine status and diagnostic panels.

When one or more of these parameters is "in alarm" (the value exceeds allowable, or even possible level or limits), the corresponding symbol will be displayed on the main screen status panel, colored red and flashing. In addition, the computer beeper will emit five short beeps every minute that one or more of these parameter is out of tolerance. For more information on the alarm system go to F2 Diagnostic menu on the second main toolbar, then see F2 engine diagnostic panel.

The Work Rate Indicator *(See Status Panel)*

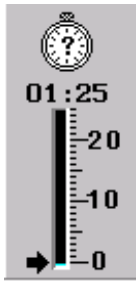

The work rate indicator shows the time elapsed for the current work mode, (elapsed time varies with the mode; i.e., work, travel, repairs, trains, etc.) the speed of working in ties per minute, (blue slider) and the maximum work speed achieved in the current work period (the black arrow).

The Status Indicators Panel *(Main Work Screen)*

The status panel displays the status of various machine functions. *From left to right,* front and rear axle/gearbox engagement, surface /liner indicator light, P1/P2 pump pressures, engine rpms, current mode hours/ties per minute, vibrators on/off and double tamp timer, combo

clamp locks, workhead locks, buggy selection, index brake applied, auto traction, clamp sustain and auto-underfoot lift.

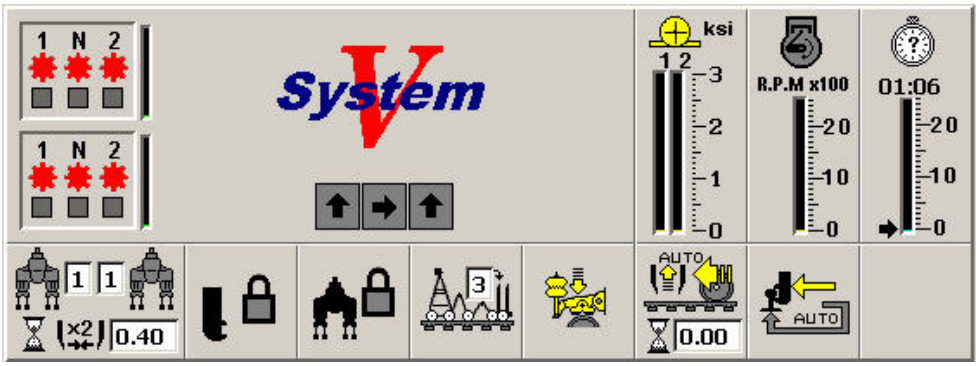

Engine Status Panel

This panel shows the status of the pneumatic , battery, engine and hydraulic parameters. Reading are displayed from top to bottom as: air system pressure, battery voltage, engine coolant temperature, engine oil pressure, engine load, and hydraulic oil temperature. In addition, the fuel level and engine warning indicators are displayed at the bottom of this panel.

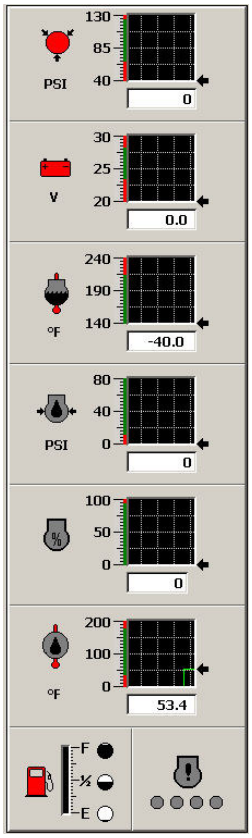

The Alarm Panel

The alarm panel is located in the middle of the main screen below the status panel. It displays messages and alarms as they occur during machine operation, as well as the current time and date. Pressing the alarm button (yellow triangle with an exclamation mark on the R/H Operator Keypad or F7) expands the alarm box so that more of the previous messages can be seen at once. Each alarm message is tagged with the time the alarm was posted and can be compared easily to the current time displayed on the clock. In addition, messages will "age" or "fade" after first appearing so that the most recent messages will attract the most attention. When a curve file is loaded and the machine is working within the limits of the recording, the alarm icon (yellow triangle with an exclamation mark) will be replaced with an estimation time to completion box. This box will give the time to complete working the recorded curve at the present work rate (ties per minute).

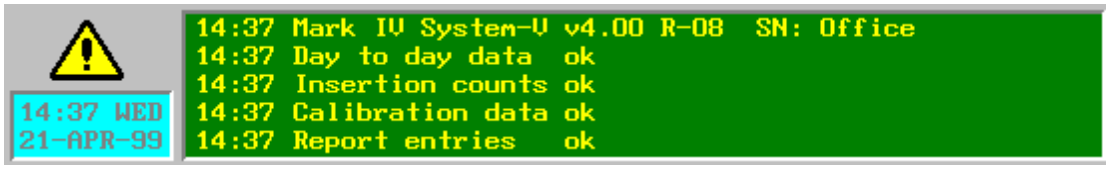

NOTE: Time and date can be set from expanded view defaults panel, F5 third toolbar set and the hours display is in 24hours.

The Surface Graph Panel - *Main Screen*

The surface graph panel is displayed at the lower left corner of the screen. While tamping, the machine is assumed to be currently positioned at the bottom of the window so that the panel indicates the next 150 feet of desired surface information to be applied as tamping proceeds. The horizontal gray lines are 100 feet apart. The horizontal light cyan line indicates where a lining transition point lies when fitted recorded track data is available.

When the track ahead of the machine has been recorded, with optional surface fitting software, the green trace represents the surface profile for the left rail and the purple trace represents the surface profile for the right rail. Surface profiles are calculated results based on measurements made when the track is recorded. The yellow trace marks the surface fit that is used to establish the lift to be applied. The desired surface fit is computed automatically by the built-in surface fitting functions, or it can be set manually using the "rubber banding" edit control points available from the expanded track view. (Machine must have Surface Fitting Option.

For surface recordings, high points are to the left and low points are to the right in this view. The distance from the yellow fit line to the purple or green trace is an estimation of the amount each rail will be lifted (note that inadequate ballast or poor conditions will reduce the accuracy of this estimate). If track has not been recorded, the distance of the yellow fit line to the zero or base line is a measure of the overall lift being applied (the actual lift will be more or less, depending on track errors).

NOTE: Any manual adjustment to recorded surface is displayed in the left hand slider of the surface lift panel. Also ***Surface Fit Option:*** Plotting a curve with the surface projector **ON, Enable** surface fit and plotting with surface projector **OFF, Disable** surface fit. After a curve is plotted, the *option cannot be turned ON or OFF*.

Moving the yellow fit line to the left increases lift and to the right decreases lift. The vertical arrow indicators on the panel are drawn to indicate this. When the current surface lift value given by the yellow line is greater than zero, the left arrow turns red. When less than zero, the right arrow turns red. When zero, neither arrow turns red. The number found on the lift slider will match the magnitude of the yellow fit line at the bottom of this window (current footage).

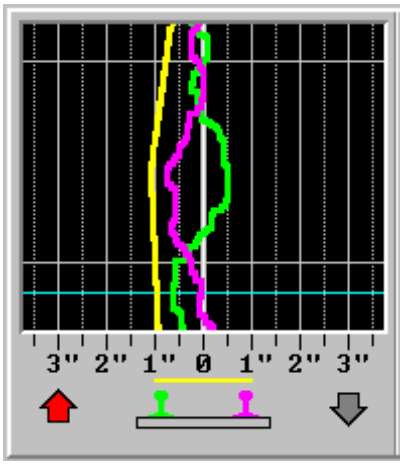

The Throws Graph Panel - *Main Screen*

The throws graph panel is displayed at the bottom of the screen to the right of the surface graph panel. While tamping, the machine is assumed to currently be positioned at the bottom of the window so that the panel indicates the next 150 feet of lateral track movement. The horizontal gray lines are 100 feet apart. The horizontal light cyan line indicates where a lining transition point lies when fitted recorded track data is played back.

At the bottom of this panel, the numerical value in the white display, between the arrows, is the total manual correction to throws that has been entered since work commenced. The red arrow indicates the direction in which this manual correction is being applied.

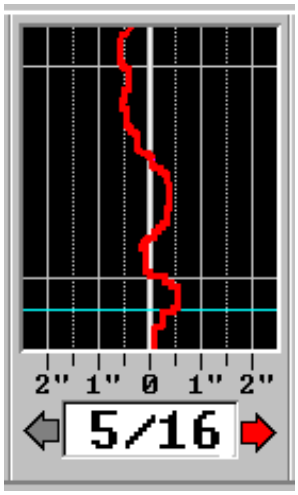

Throws are computed automatically by the built-in curve fitting functions. Throws may be manually adjusted by the operator using the "rubber banding" edit controls provided in the expanded track view.

The Superelevation Graph Panel - *Main Screen*

The superelevation graph panel is displayed at the bottom of the screen to the right of the throws graph panel. While tamping, the machine is assumed to currently be positioned at the bottom of the window so that the panel indicates the next 150 feet of design superelevation to be applied as tamping proceeds. The horizontal gray lines are 100 feet apart. The horizontal light cyan line indicates where a lining transition point lies for fitted recorded track data. The distance (307) mark at where this transition lies is also displayed here. The length (160) of the transition is displayed in yellow text in parentheses. The horizontal cyan line is a marked feature line. The distance (295) mark at where this marked feature lies is also displayed here. The numerical value in blue between the two track symbols at the base of this panel, (40 in this instance) is the distance from the current location of the machine to the next transition point.

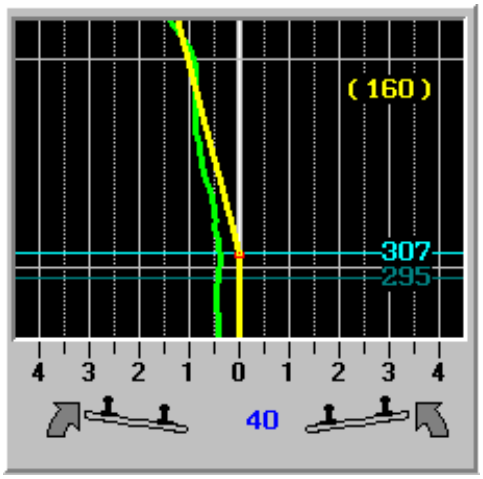

The yellow trace indicates the design or desired superelevation or crosslevel to be achieved by the machine during tamping. When a track recording is used to control the machine, the green trace indicates the recorded superelevation data. The number displayed on the superelevation graph panel will match the magnitude of the yellow trace at the bottom of this window (current footage).

All values displayed to the left of the centerline (which is zero) indicate the rail is banked toward the right. Conversely, all values displayed to the right of the centerline indicate the rail is banked toward the left. The arrows indicate this convention, and are painted red according to the current desired value (yellow trace) being used by the machine.

NOTE: Neither arrow is red if the desired superelevation is zero.

The Line Graph Panel - *Main Screen*

The line graph panel is displayed at the bottom of the screen to the right of the superelevation graph panel. While tamping, the machine is assumed to currently be positioned at the bottom of the window so that the panel indicates the next 150 feet of design lining (expressed in degrees of curvature) to be applied as tamping proceeds. The horizontal gray lines are 100 feet apart. The distance value associated with each horizontal gray line is also displayed here. The horizontal light cyan line indicates where a curve lining transition point lies for fitted recorded curve data or when manually set by the operator (build a curve). The horizontal cyan line is a flag or marked feature line. The blue numerical value, (40 in this instance) at the bottom right of the display, is the distance from the current location of the machine to the

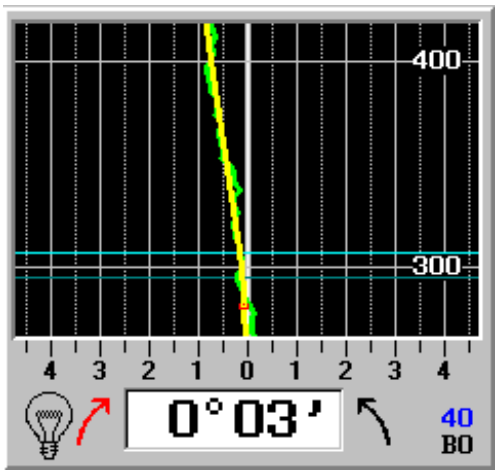

next transition point. The alphabetical letter and numerical value, at the bottom right under the blue numerical value, (40) is the best fit and sensitivity (B0 in this instance) of the recorded curve. The light bulb, bottom left, is the on/off symbol for the optional LineLite liner system.

The yellow trace indicates the curve fit for the track. The green trace indicates the recorded curve geometry. When the yellow trace is drawn to the left of the centerline, right-hand curvature is assumed as indicated by the left arrow. When the yellow trace is drawn to the right of the centerline, left-hand curvature is assumed as indicated by the right arrow. The yellow trace is drawn directly up the centerline for tangent track. The white information box at the bottom of the panel indicates the degree of curvature assumed at the current footage, and the corresponding arrow is painted red to indicate the direction of curvature (left or right).

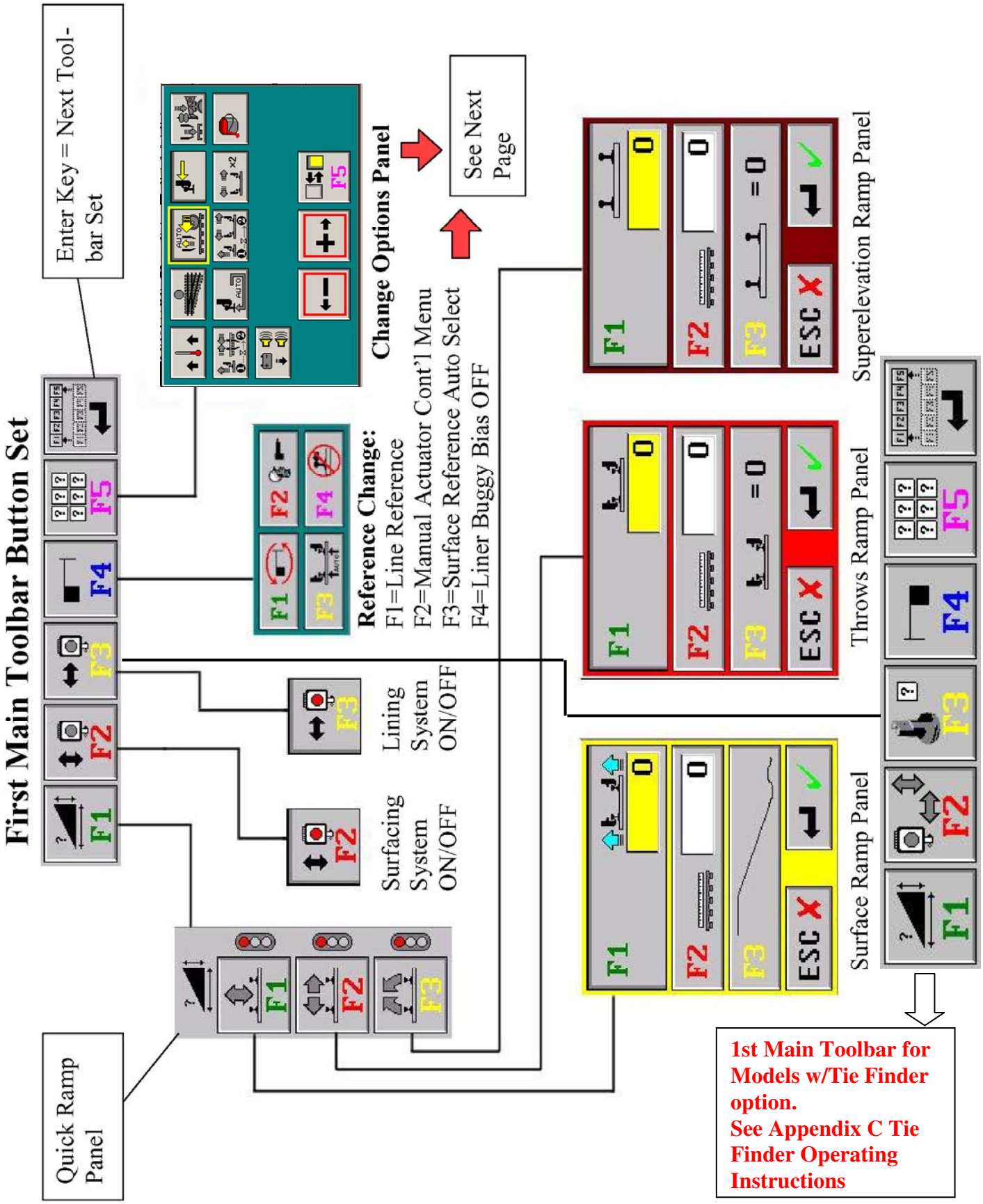
First Main Toolbar Button Set
Enter Key = Next Tool-bar Set
Change Options Panel
See Next Page
Reference Change:
F1=Line Reference
F2=Manual Actuator Cont'l Menu
F3=Surface Reference Auto Select
F4=Liner Buggy Bias OFF
Lining System ON/OFF
Surfacing System ON/OFF
Quick Ramp Panel
Superelevation Ramp Panel
Throws Ramp Panel
Surface Ramp Panel
1st Main Toolbar for Models w/Tie Finder option.
See Appendix C Tie Finder Operating Instructions

First Main Toolbar Set – Cont'd

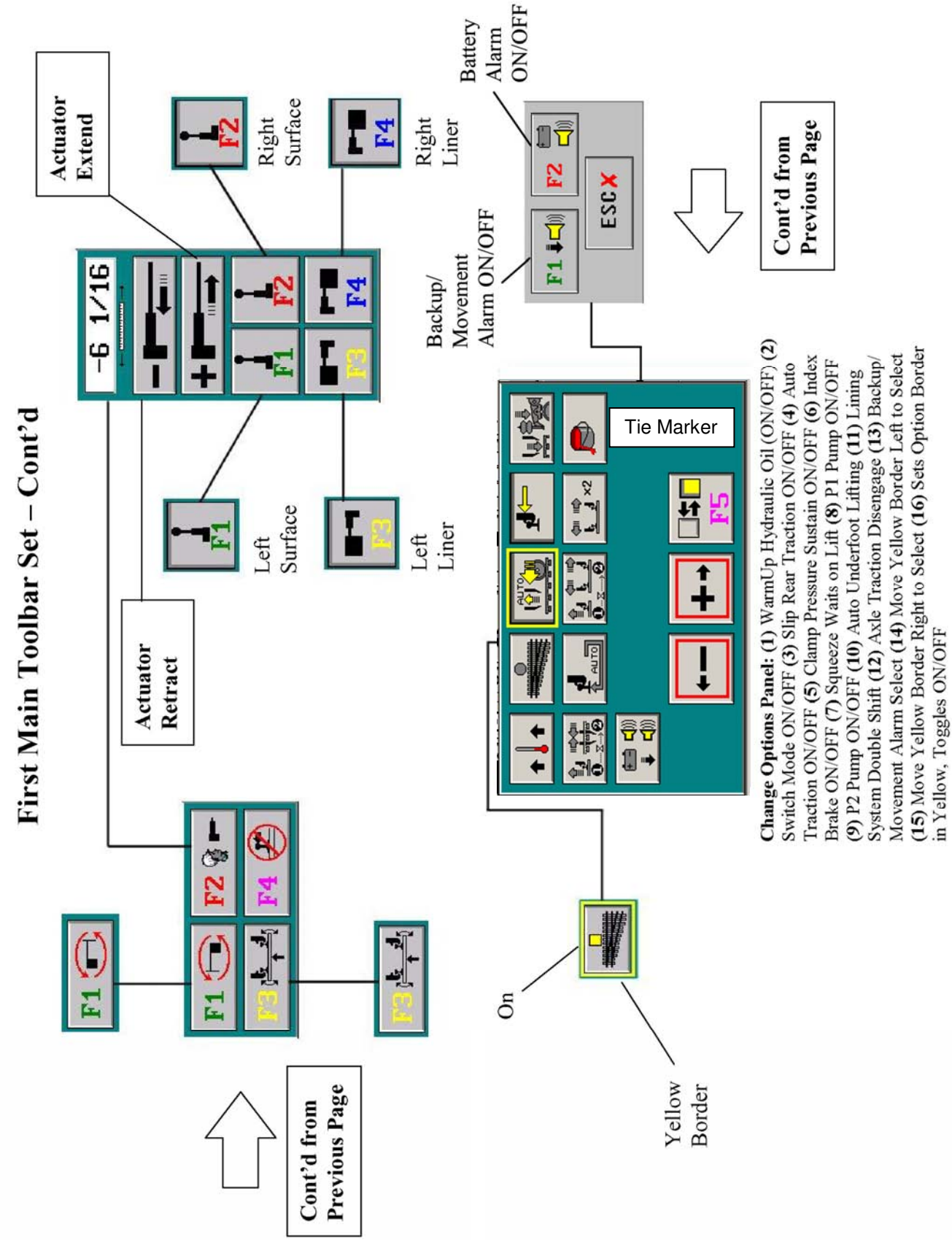

Change Options Panel: **(1)** WarmUp Hydraulic Oil (ON/OFF) **(2)** Switch Mode ON/OFF **(3)** Slip Rear Traction ON/OFF **(4)** Auto Traction ON/OFF **(5)** Clamp Pressure Sustain ON/OFF **(6)** Index Brake ON/OFF **(7)** Squeeze Waits on Lift **(8)** P1 Pump ON/OFF **(9)** P2 Pump ON/OFF **(10)** Auto Underfoot Lifting **(11)** Lining System Double Shift **(12)** Axle Traction Disengage **(13)** Backup/ Movement Alarm Select **(14)** Move Yellow Border Left to Select **(15)** Move Yellow Border Right to Select **(16)** Sets Option Border in Yellow, Toggles ON/OFF

Main or Work Screen Toolbar Buttons

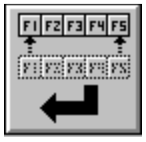

ENTER Key

The toolbar buttons are located in the top right corner of the screen. Each button corresponds to its counterpart on the R/H keypad on the operator R/H armrest. There are three sets of toolbar buttons for the main screen display, and three sets for the expanded track view.

Pressing the ENTER key (the bottom right button on the operator's R/H keypad) changes the toolbar to the next set of buttons.

The First Toolbar Button Set - *Main View*

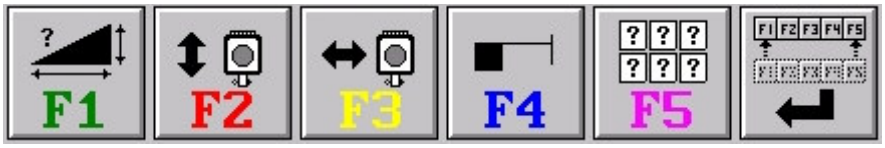

Main View - First Toolbar Set

The first toolbar button set is present whenever the machine is started, whenever the display is switched from the expanded track view mode back to the Main screen, or whenever more than 7.5 seconds lapses without the selection of a current toolbar button.

F1 - The Quick Ramp Panel

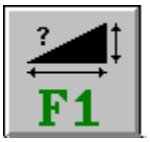

Pressing this button opens the Quick Ramp panel (shown below) that is used to apply (or cancel) smooth variations or ramps to surface, throws and superelevation.

NOTE: It is intended that this panel be used in cases where the result of a recording and best fit is NOT used to control the selected parameter. I.e. you would not use F3 to change the superelevation ramping of a fitted curve spiral or F1 to change the surface of track with recorded surface (if fitted). Using quick-ramp features in such cases will discard or modify existing fit information, possibly causing severe problems in line, surface or superelevation.

While the Quick-Ramp panel is open, the ramping status of surface, throws and superelevation will be indicated by the pressed or released state of the corresponding button and traffic light symbol. When a parameter is being ramped, the corresponding button will appear depressed and the traffic light symbol will show green. When a parameter is not being ramped, the button will appear released and the traffic light symbol will be red. If ramping is in progress, pushing the corresponding button will stop the current ramp at the current value. If no ramp is in progress, a ramp panel for the corresponding parameter will open.

<u>F1 - Surface Quick-Ramp</u>

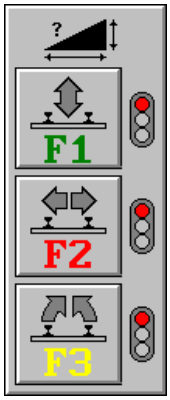

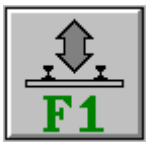

Pressing F1 opens the Surface Quick-Ramp Panel. When the Quick-Ramp panel for surface opens, the F1 button will be initially depressed. If you wish to ramp down the lift until the machine is no longer lifting, simply press F3. A value of 1-1/2 inches below zero will be applied and the F2 button will be automatically selected so the length over which to ramp out can be changed before pressing ENTER to begin.

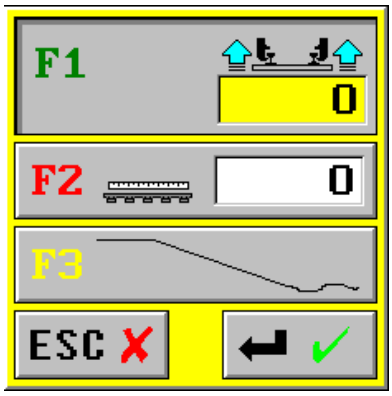

Otherwise enter the value of lift to be ramped to at the end of the desired ramp by either using the PC keyboard to type in a number or use the plus and minus keys. Press F2 and use the plus and minus keys (or type the number) to specify the length of the desired ramp.

NOTE: On all quick ramp panels, the F2 (Footage Panel) will default to the previously used footage. If this is undesirable, type in the desired footage or use the plus(+) or minus(-) key to select the desired footage.

After the target value (at the end of the ramp) and the length of the ramp has been specified, you can either press ESCAPE to postpone starting the ramp or ENTER to begin the ramp right now. If you press ESCAPE, the values you have entered will be retained until you again open this panel.

NOTE: This panel should not be used if the surface fitting option is being used to control lift. Using this panel in this case would delete the surface fit and all surface control points ahead of the machine.

F2 - Throws Quick-Ramp Panel

Pressing F2 opens the Throws Quick-Ramp Panel. When the Quick-Ramp panel for throws opens, the F1 button will be initially depressed. If you wish to ramp throws to zero, simply press F3 and the F2 button will be automatically selected so the length over which to ramp throws to zero can be changed before pressing ENTER to begin.

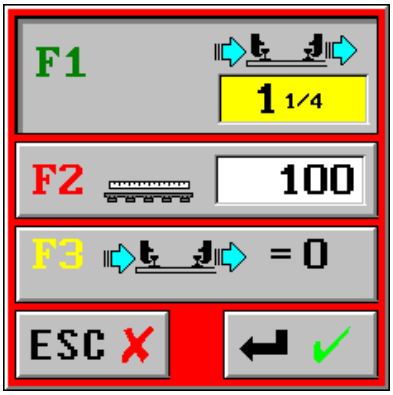

Otherwise enter the value of throws to be ramped to at the end of the desired ramp by either using the PC keyboard to type in a number or use the plus and minus keys. Press F2 and use the plus and minus keys (or type the number) to specify the length of the desired ramp.

NOTE: On all quick ramp panels, the F2 (Footage Panel) will default to the previously used footage. If this is undesirable, type in the desired footage or use the plus(+) or minus(-) keys to select the desired footage.

After the target value (at the end of the ramp) and the length of the ramp has been specified, you can either press ESCAPE to postpone starting the ramp or ENTER to begin the ramp right now. If you press ESCAPE, the values you have entered are retained until you again open this panel.

NOTE: This panel should not be used where track has been recorded and throws control points have been entered or recorded in order to line track to stakes or monuments. Entering a throws ramp will delete any throws control points ahead of the machine. This panel CANNOT be opened if Line-Lite is active.

F3 - SuperElevation Quick-Ramp Panel

Pressing F3 opens the SuperElevation Quick-Ramp Panel. When the Quick-Ramp panel for superelevation opens, the F1 button will be initially depressed. If you wish to ramp superelevation to zero, simply press F3 and the F2 button will be automatically selected so the length over which to ramp superelevation to zero can be changed before pressing ENTER to begin.

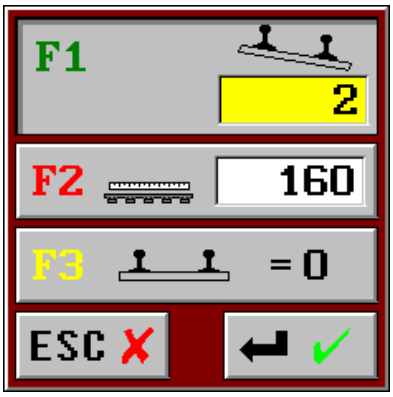

Otherwise enter the value of superelevation to be ramped to at the end of the desired ramp by either using the PC keyboard to type in a number or use the plus and minus keys. Press F2 and use the plus and minus keys (or type the number) to specify the length of the desired ramp.

NOTE: On all quick ramp panels, the F2 (Footage Panel) will default to the previously used footage. If this is undesirable, type in the desired footage or use the plus(+) or minus(-) key to select the desired footage.

After the target value (at the end of the ramp) and the length of the ramp has been specified, you can either press ESCAPE to postpone starting the ramp or ENTER to begin the ramp right now. If you press ESCAPE, the values you have entered will be retained until you again open this panel.

NOTE: This panel should not be used where track has been recorded and superelevation is being controlled using the best fit of the recording. Entering a superelevation ramp will delete any superelevation transitions and control points ahead of the machine. system.

F2 - The Surface Projector (System) ON/OFF Buttons

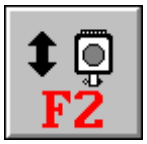

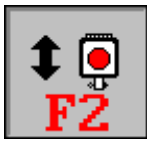

Pressing F2 on the first toolbar button set turns the surface projector on or off. The surface projector is OFF when the button is not pressed inward (left) and ON when the button is pressed inward (right). Note that the circle drawn in the projector is dark gray when projector is off and red when on. Turning the surface projector on enables the lifting system and causes the surfacing receivers to go to their zero position.

Dual function button for models w/Tie Finder.

F3 - The Liner Projector (System) ON/OFF Button

Pressing F3 on the first toolbar button set turns the lining system on or off. The lining system is OFF when the button is not pressed inward (left) and ON when the button is pressed inward (right). Note that the arrows are dark gray when the lining system is off and red when on. When the lining system is on, bias is applied to the measuring buggies, the lining system is enabled and the lining actuator will go to the zero position.

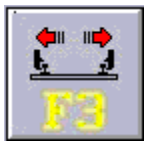

F4 - The Surface or Line Reference Selector Panel

Pressing F4 on the first toolbar button opens a panel to select the reference rail for lining or the method of surface reference as follows:

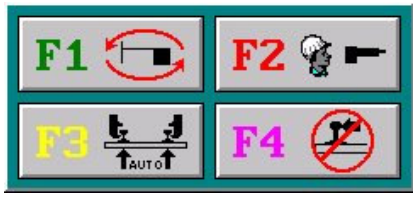

Pressing F1 either once or twice indicates lining system reference. The F2 button brings up the "Manual Actuator Control Menu". The F3 button determines if the *reference rail for surface* will be either automatically selected or by centerline reference. The bias wheels will be released when F4 button is pressed. Bias will automatically be restored when this panel is closed, if the lining system is on. Pressing the ENTER or ESC key closes this panel and saves any changes made.

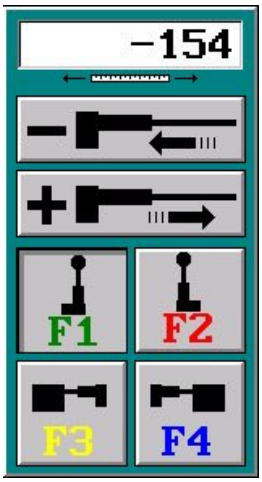

The "Manual Actuator Control Menu" offers manual controls for extending and retracting the (left /right) *surface actuator cylinders* and (left/right) *liner actuator cylinders*. Pressing the (+) *Actuator Extend* button extends the actuator cylinder while pressing the (-) *Actuator Retract* button retracts the actuator cylinder. In the example at right, F1 (left surface receiver) has been selected. The actuator extend/retract buttons are now available to either raise or lower left surface receiver.

F5 - Change Options Panel

Pressing F5 on the first toolbar opens an options panel. Use this panel to change various machine options.

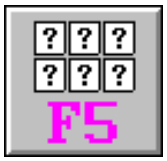

Use the plus or minus key to move the yellow border to the option you wish to change. Then press the F5 key to toggle the state of the option surrounded by the yellow border. Press the ENTER or ESC key to close this panel (all changes will be saved).
The option that is selected when this panel is closed (i.e. the button that is surrounded by the yellow border) will again be selected the next time this panel is opened. This allows the currently selected option to be easily changed from the first toolbar button set. **NOTE:** *The warm-up button will be highlighted initially during computer boot up*. In the following paragraphs, the purpose of each option that appears on the option panel will be explained.

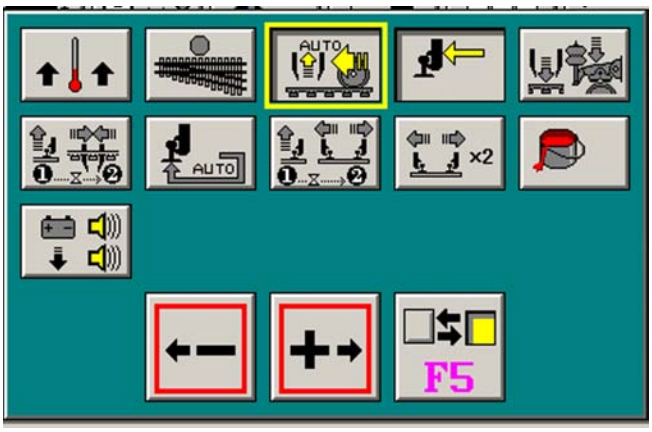

The Warm-up ON/OFF Mode

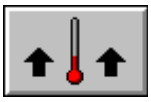

When pressed on and in work mode, (as shown right), the warm-up valve becomes energized causing the P1 and P2 pumps to pressurize. The hydraulic oil is diverted through an orifice to assist in warming the hydraulic oil. (Optional fast warm-up turns on vibrator reliefs to do a faster warm-up.)

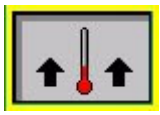

The Switch Mode ON/OFF Mode

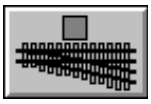

Switch mode is off when the button is not pressed inward as shown at the left. Switch mode is on when the button is pressed inward as shown at the right.

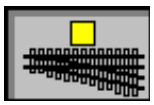

The switch mode indicator, shown on the status panel, will appear in place of the auto traction symbol (or the blanked square) whenever switch mode is activated, since auto traction will be disabled while the machine is working in switch mode. Switch mode is intended to be turned on when tamping portions of switches so as to provide certain operational changes and overrides that are of help when tamping switches. Some of the overrides in switch mode will require the operator to exercise more caution than would be necessary in production mode.

Switch mode is activated and deactivated from the Change Options panel, opened by pressing the F5 key on the first toolbar set. **Note:** The change options panel can also be opened by pressing the switch mode key on the left keypad.

IN SWITCH MODE:

- Autojack traction is inhibited, as clearance may be restricted.
- Cycle will cause track to be lifted, lined and held in position so that workhead(s) can be traversed laterally to tamp the tie in other lateral positions.
- Cycling with manual workhead joysticks will not initiate lifting and lining as it will in production mode. This allows for the tamping of ties without lifting where lifting is impossible or impractical.
- Traction is not inhibited by clamp or workhead status and the machine can be moved at any time. Traction after "auto-jack" (jack and hold) will release the track in production mode but **NOT** in switch mode.
- If a clamp hook is already at a limit switch, using a clamp hook joystick will allow the operator to continue outfeeding or downfeeding the hook past the switch.
- If a clamp hook derails it will not automatically outfeed and downfeed to the limit switches due to possible lack of clearance. The clamp joysticks will have to be used to manually reposition the clamps prior to another cycle.
- When jacking the track using the "auto-jack" button (top left in the L/H operator keypad), releasing the button before lift has completed will cause the lift to terminate prematurely. This may be critical when lifting a turnout rail, which is not carrying the shadowboard, and that rail becomes detached from the tie.
- In Production mode, the clamp hooks normally outfeed to the limit switch. In switch mode, outfeed will occur only while the operator holds down the auto-jack-release button. This may be necessary when the hook is unable to outfeed to the limit switch due to lack of clearance with an adjacent track component.
- There is an independent set of insertion counters for switch mode.

The Auto Traction ON/OFF and Traction Delay Mode

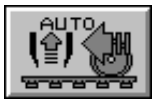

When Auto Traction is off, the option button for this feature will appear as shown the left. When Auto Traction is on, the option button will appear depressed as shown to the right and the left facing arrow will be yellow. With Auto Traction OFF, no symbol will be displayed in the status panel main screen.

Turning this option on will open a small panel that allows the auto traction delay to be modified and decel values to be set.

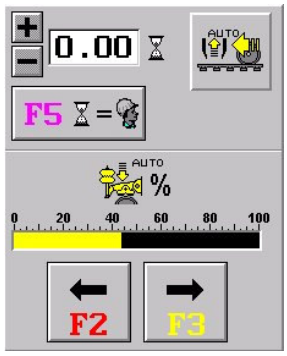

The number in the upper box is traction delay in seconds. This is the delay that is applied after squeeze pressure is reached and before traction is engaged. Press the plus or minus key to change this in increments of a hundredth of a second. The F5 key allows the operator to enter a value and manually increase or decrease the value by pressing the plus or minus keys. Press the F5 key once to enter a number or twice to reset the value back to zero. The lower half of the figure (at right) pertains to the decel valve and the amount of dynamic braking to be applied to the machine. The F2 and F3 keys are used to change the amount of dynamic braking applied to the machine.

- Press F2 to decrease the amount of dynamic braking
- Press F3 to increase the amount of dynamic braking

Press ENTER or ESC to close the auto traction delay panel. When turning the *Auto Traction* feature off, the delay panel will not appear.

NOTE: In most conditions, it will be possible to work with a delay of zero (best production). Combinations of tie height, tie spacing, downhill grades, rain and so on may require increasing or decreasing this delay so as to prevent clipping of the ties by the tamping tools.

The Clamp Pressure Sustain ON/OFF Mode

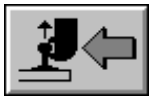

The Clamp Pressure Sustain option is OFF when the button is not pressed inward (left) and the arrow on the button will be dark in color. When ON, the button is pressed inward (right) and the arrow on the button will be yellow. When this option is OFF, hook in hydraulic valves will turn OFF when hook pressure is made. When this option is ON, hook in hydraulic valves will stay ON when hook pressure is made. This feature should be off unless rail or components have a slope that forces the hook out while lifting.

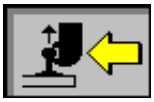

The Use Index Brake in Cycle ON/OFF Mode

The Use Index Brake In Cycle option is OFF when the button is not pressed inward (left) and the symbols on the button will be dark in color. When ON, the button is pressed inward (right) and the symbols on

the button will be yellow. When this option is ON, the index brake on the rear axle will be applied during dynamic braking in work mode. When this option is OFF, the index brake is not used to stop the machine while tamping track and braking will be hydraulic. Note, that if the machine is idle for more than two seconds, the P1 and P2 pumps will shut down and the index brake will be applied until work resumes. As braking between ties is almost completely hydraulic, setting this option to OFF can save wear and decrease the frequency of adjustments without compromising production. It may however be necessary to set this option to ON when working downhill.

The Squeeze Waits On Lift ON/OFF Mode

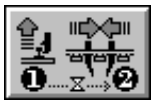

The Squeeze Waits On Lift option is OFF when the button is not pressed inward (left) and the symbols on the button are dark in color. When ON, the button is pressed inward (right) and the symbols on the button will be yellow. When this option is ON, workhead squeeze will not commence until lift is complete. It is recommended that this option only be used when single tamping with an intermediate to large lift or when making large changes to superelevation. This mode is of little value for small lifts and double tamping.

Underfoot Lifting

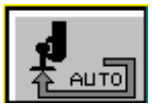

When enabled, this feature will automatically respond to a clamp hook slipping off a joint bar or similar by raising the workheads, moving the slipped hook below the foot of the rail, and automatically restarting the cycle. When the cycle is completed, the hooks will automatically return to their normal position before traction is enabled.

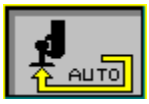

Because this feature is dependent on the clamp frame being positioned between the ties, the operator can disable it when working in an area where such alignment is not practical.

Line After Lift

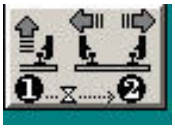

When enabled, this feature will delay the lining function until lifting or jacking is completed.

Double Shift

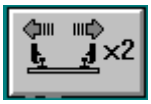

When enabled, this feature will cause track to be lined twice for each cycle. This feature is considered by some to be of help when additional lateral resistance to lining is encountered (such as cemented ballast).

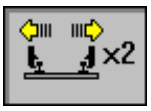

Tie Marker Option

When enabled, this feature will activate the tie marker feature.

Movement and Battery Alarms

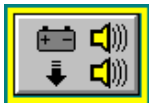

Movement and Battery Alarm

Selecting the Movement and Battery Alarm switch (left) from the Change Options Panel displays the Movement and Battery Alarm Panel (right). This panel allows the operator to turn ON/OFF the Movement Alarm or Battery Alarm. The "speaker" symbol (right) displays the state of the switch; yellow. for ON or gray for OFF.

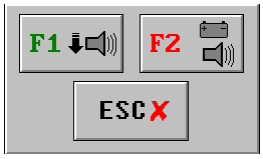

Movement and Battery Alarm Panel

NOTE: Two audible movement alarms are used; one at the front of the machine and one at the rear. These alarms emit a "beeping" sound that can be heard by workers in and around the machine.

Continuous Movement Alarm (Enabled)

Pressing the F1 key on the Movement and Battery Alarm Panel will enable the Continuous Movement Alarm (left). The Movement switch has two separate alarm functions:

- If enabled (yellow) serves as a Continuous Movement Alarm
- If disabled (gray) serves as a Change of Direction Alarm.

When the Continuous Movement Alarm is enabled, the rearmost alarm on the machine will sound *continuously* as the machine moves in the reverse direction. Note that the front alarm will be disabled during reverse movement and will not sound.

NOTE: The movement alarm is also referred to as the backup alarm.

Change of Direction Alarm (Enabled)

Pressing the F1 switch again will disable the Continuous Movement Alarm and enable the Change of Direction Alarm (left).

With the Change of Direction Alarm enabled (default), both front and rear movement alarms will sound for three (3) seconds when a change of machine direction is detected. Also, if the machine has not moved for 3 minutes or more, both alarms will sound when the machine begins to move again (in either direction).

Battery Alarm (Enabled)

Press the F2 button to enable or disable the Battery Alarm. When the battery alarm is enabled (default), both front and rear movement alarms will sound once every two (2) minutes whenever the system is ON and engine is not running. This alarm is a reminder that the batteries are being charged. Disable this alarm if it becomes necessary to keep the control system ON while the engine is OFF.

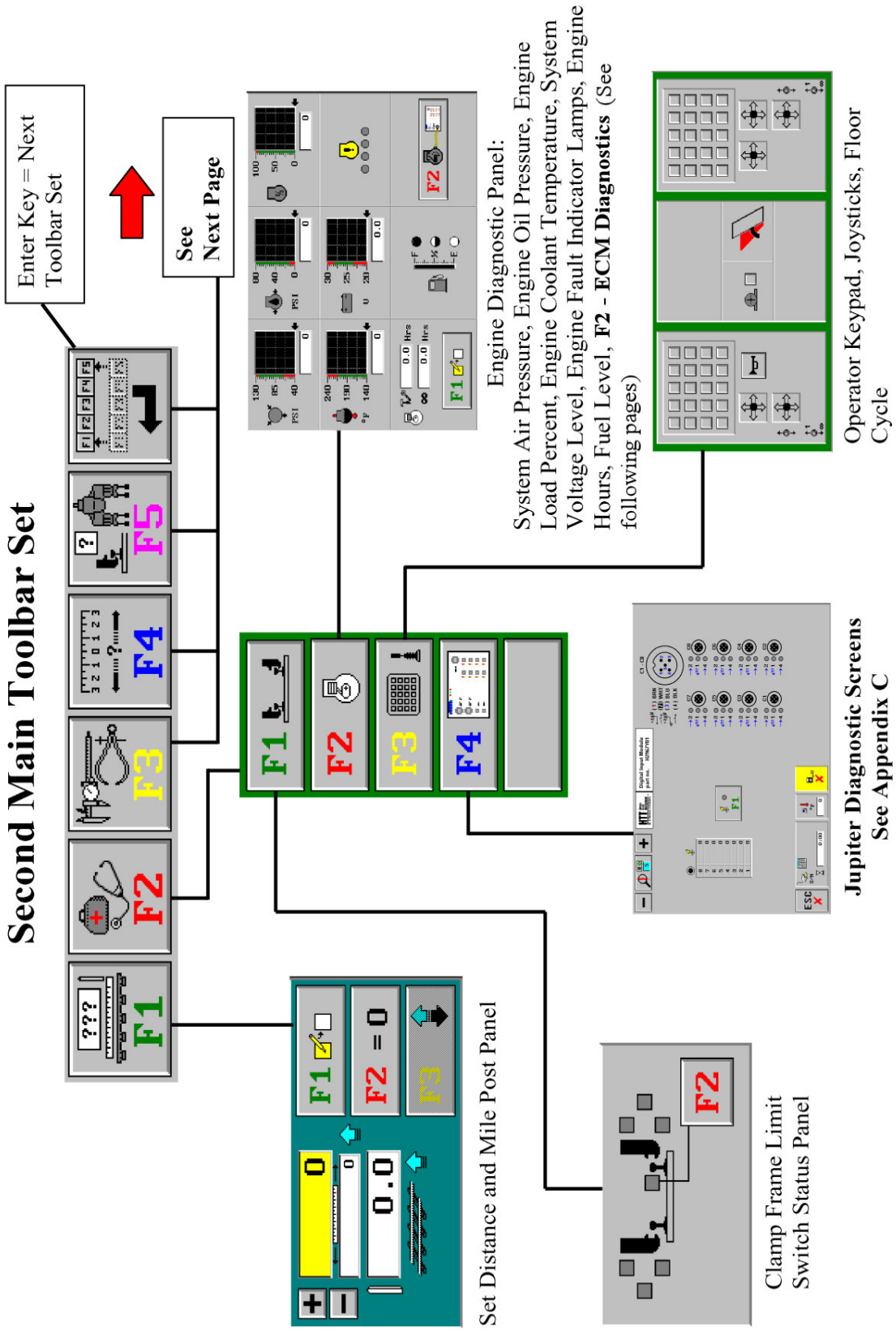
Second Main Toolbar Set
F1
F2
F3
F4
F5
Enter Key = Next Toolbar Set
See Next Page
Engine Diagnostic Panel:
System Air Pressure, Engine Oil Pressure, Engine Load Percent, Engine Coolant Temperature, System Voltage Level, Engine Fault Indicator Lamps, Engine Hours, Fuel Level, **F2 - ECM Diagnostics** (See following pages)
Operator Keypad, Joysticks, Floor Cycle
Jupiter Diagnostic Screens See Appendix C
Set Distance and Mile Post Panel
Clamp Frame Limit Switch Status Panel

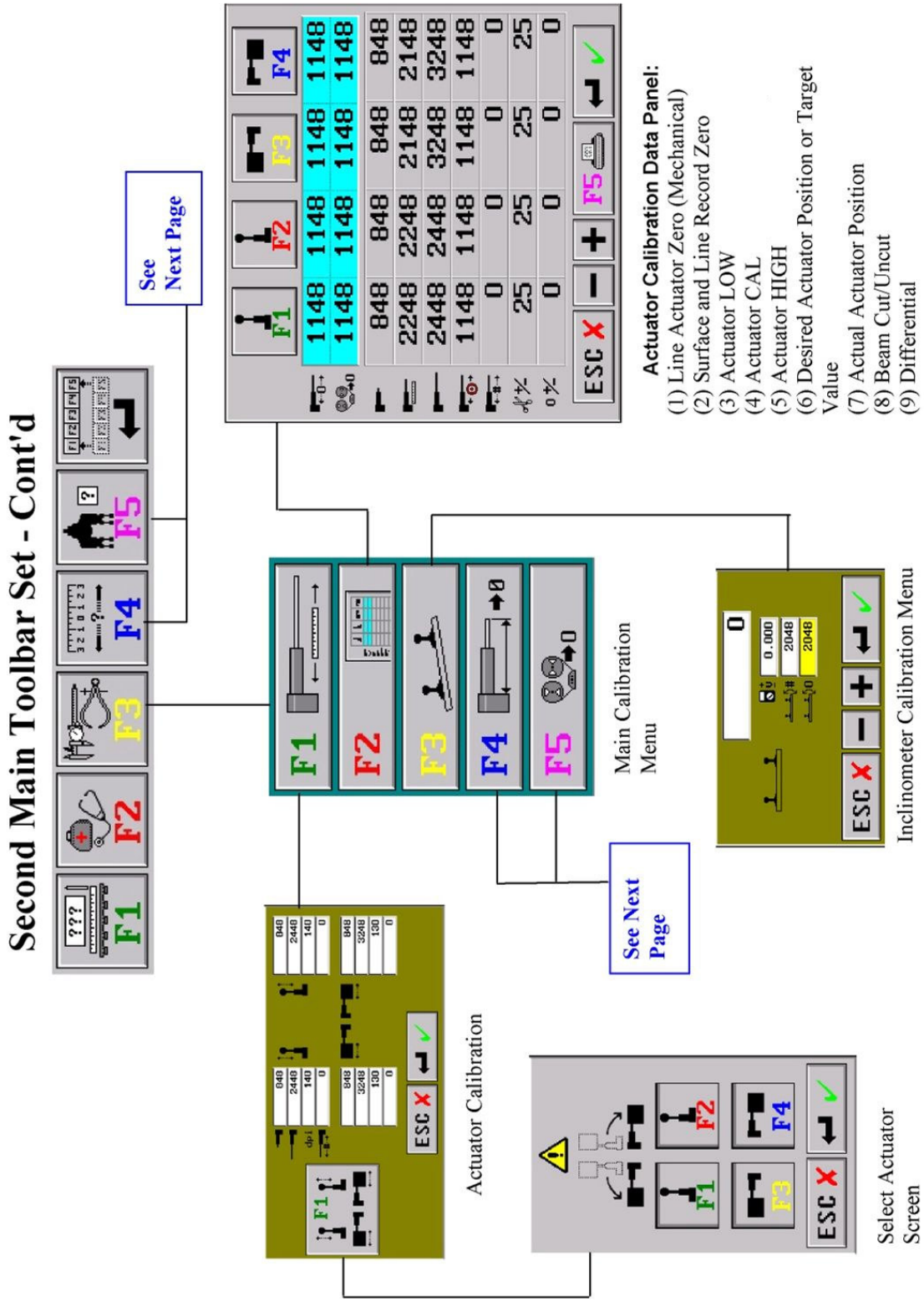
Second Main Toolbar Set - Cont'd
See Next Page
Actuator Calibration Data Panel:
(1) Line Actuator Zero (Mechanical)
(2) Surface and Line Record Zero
(3) Actuator LOW
(4) Actuator CAL
(5) Actuator HIGH
(6) Desired Actuator Position or Target Value
(7) Actual Actuator Position
(8) Beam Cut/Uncut
(9) Differential
Main Calibration Menu
Inclinometer Calibration Menu
See Next Page
Actuator Calibration
Select Actuator Screen

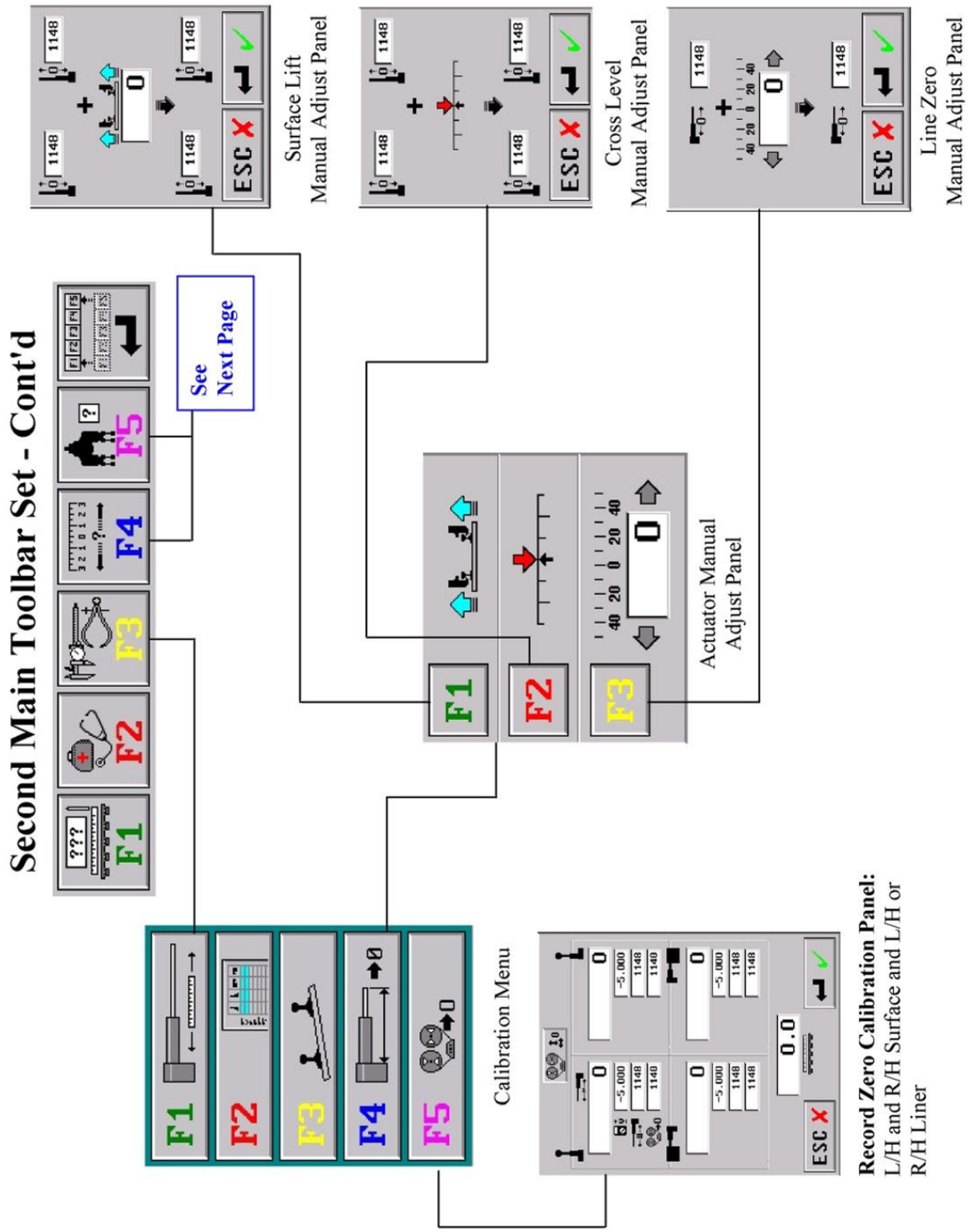
Second Main Toolbar Set - Cont'd
F1
F2
F3
F4
F5
See Next Page
Surface Lift Manual Adjust Panel
Cross Level Manual Adjust Panel
Line Zero Manual Adjust Panel
ESC
Actuator Manual Adjust Panel
Calibration Menu
Record Zero Calibration Panel:
L/H and R/H Surface and L/H or R/H Liner

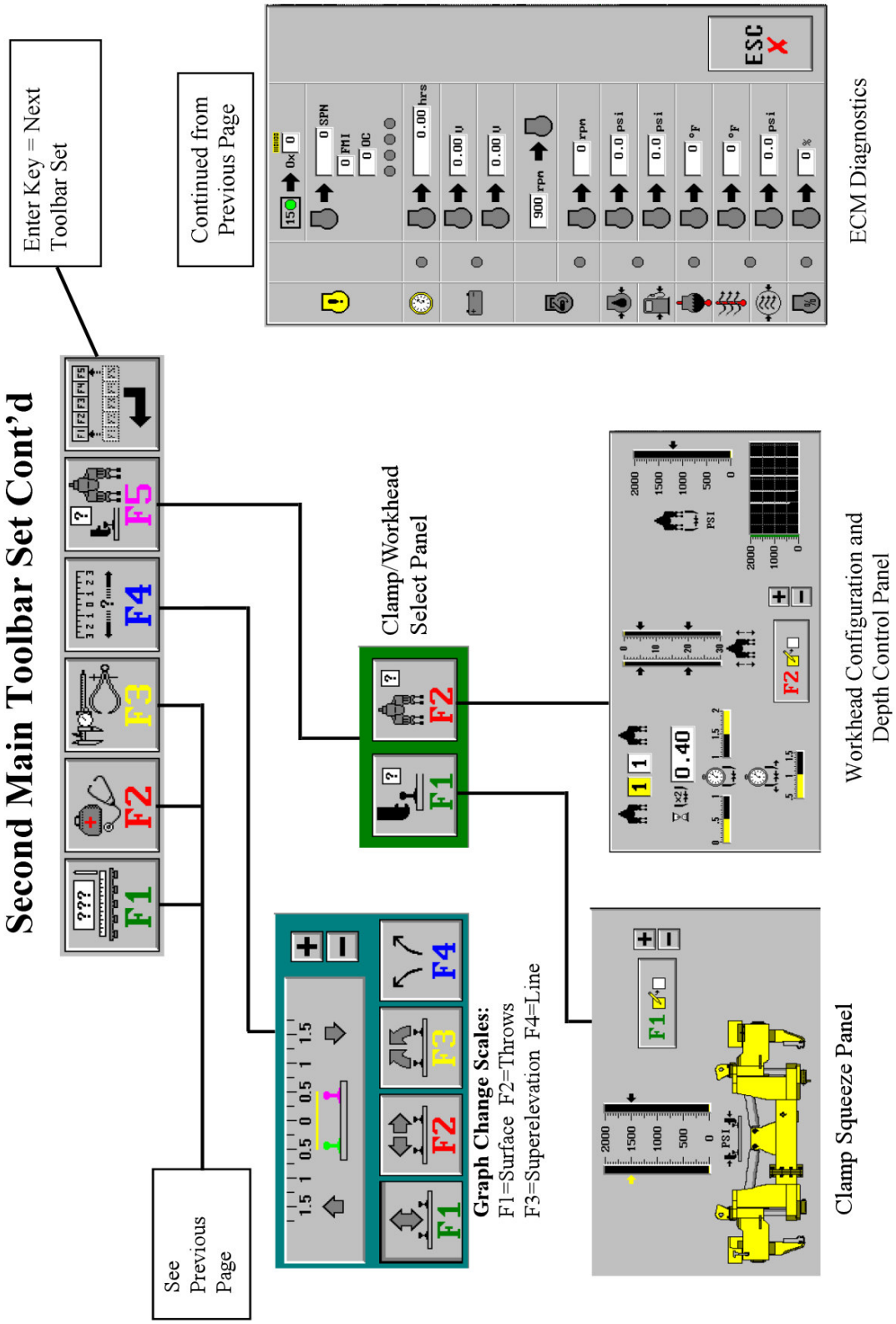
Second Main Toolbar Set Cont'd
Enter Key = Next Toolbar Set
Continued from Previous Page
ECM Diagnostics
Clamp/Workhead Select Panel
Workhead Configuration and Depth Control Panel
Clamp Squeeze Panel
Graph Change Scales:
F1=Surface F2=Throws
F3=Superelevation F4=Line
See Previous Page
F1
F2
F3
F4
F5
ESC

The Second Toolbar Button Set - *Main View*

The second toolbar button set is displayed whenever the ENTER key has been pressed from the first toolbar button set (main view).

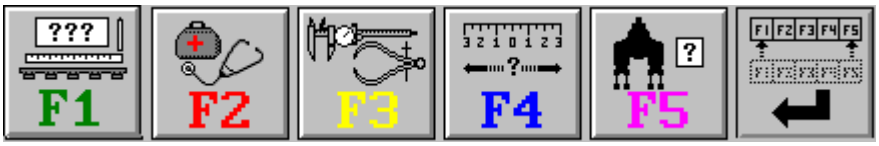

F1 - Set Distance or Mile Post Panel

Pressing this button opens the *Distance Settings Panel* (figure 1) that is used to set the current machine distance and milepost location. The larger footage box (footage counter) is automatically set to zero at the start of each new recording. The second box (accumulative footage) can only be changed by the operator and is not used internally for any purpose. At the discretion of the operator, this footage can be used to accumulate track tamped or to synchronize with the line-side features where location is marked in feet (or ignored completely). The accumulative footage counter can be set to count down with forward movement as indicated by the left cyan up/down arrow on the distance panel. The F1 button selects one of the three fields to work with. The F2 button will set the selected highlighted field to zero. The F3 button selects the counting direction for the selected field.

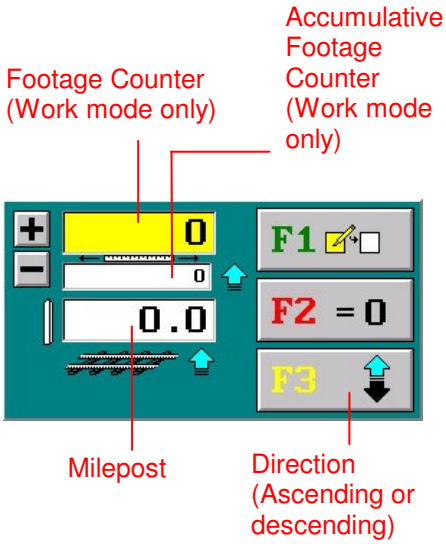

Fig. 1
Distance Settings Panel

Holding down a plus or minus key while the milepost box is highlighted changes the milepost by .10 mile, 1 mile, 10 mile and 100 mile increments depending upon how long the key remains pressed. Pressing F3 toggles the direction of travel for the milepost counter. When the arrow pointing upward is light blue, the value in the milepost box will increase as the machine moves forward. However, when the arrow pointing downward is light blue, the value in the milepost box will decrease as the machine moves forward. Pressing the ESC key or the ENTER key closes this panel and saves any changes made.

NOTE: The PC keyboard can be used to directly type in a value for the field currently selected (yellow highlight box).

F2 - Diagnostics Menu

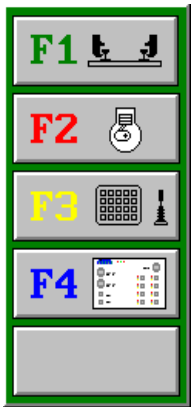

Pressing the F2 button on the second toolbar button set opens the diagnostics menu. The diagnostics menu is used to verify various inputs and/or outputs to or from the computer, such as combo clamp frame limit switches, workhead and clamp frame pressure transducers, operator control switches or the status of Jupiter I/O modules.

F1 - Clamp Frame Diagnostic Panel

Pressing F1 on the diagnostics menu opens the clamp frame limit switch panel. This panel displays the limit switches (and bias cylinder) as viewed by the operator. The respective boxes (left) will light up yellow when the upper, lower or outer limit switches for a side are made. The F2 key can be used to turn clamp bias ON or OFF. Set the clamp frame setup screen for monitoring and setting the clamp squeeze pressure transducers. Note that the machine may be operated normally while this screen is being displayed in order to observe the switches during cycle.

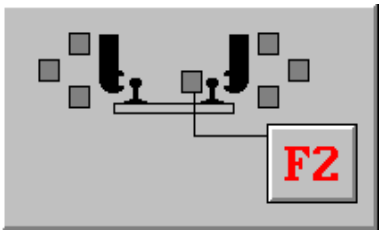

Press the ESC key to close this panel.

F2 - Engine Diagnostic Panel (used on machines without mechanical gauges)

Pressing F2 on the diagnostic menu opens the engine diagnostic panel. This panel shows the status of the engine and pneumatic system. Some graphics display the last hour of readings for the given parameter. Readings are displayed from left to right and top to bottom as follows: system air pressure, engine oil pressure, engine load percent, engine coolant temperature, system voltage level, engine fault indicator lamps, engine hours (maintenance cycle and total), and fuel level. The maintenance engine hours can be manually changed by pressing the F1 button. The total engine hours are reported from the engine control module (ECM). The F2 button in the bottom right corner of the panel opens the engine control module diagnostics panel. The instantaneous value for a given parameter can be read in the information box below the graph. If any graph is “grayed-out”, the device is disabled. A disabled device is usually not working due to a loose or broken wire. The machine may be operated normally while this panel is being displayed.

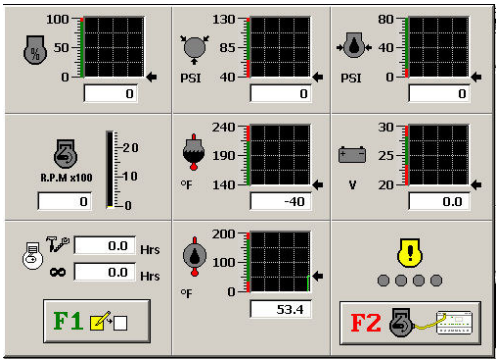

.

When any of the displayed parameters exceed the allowable levels, engine diagnostic panel will open automatically. Once this panel has been used to view an out of range parameter and closed using Esc or Enter keys, the panel will not automatically open again unless a problem occurs for a different parameter.

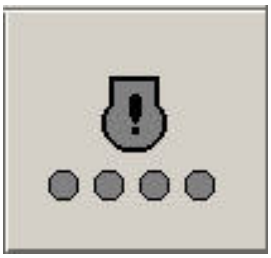

When a parameter is "in alarm" (the value exceeds allowable, or even possible levels), the corresponding symbol will be colored red and flash. These flashing symbols will also be seen on the main screen. In addition, the beeper will emit a short series of five beeps every minute, this indicates that one or more of these parameters is out of tolerance. The battery voltage also displays a low or high voltage alarm in the alarm panel. The fuel level is out of tolerance when at less than 10%.

NOTE: When a value for a parameter exceeds possible levels (caused by a faulty sender or open circuit wiring), the associated graph will be blanked out and dashes will show in the associated white box.

Listed below are the allowable values for each parameter
1) System Air Pressure: Maximum 125 PSI & Minimum 65 PSI
2) Engine Oil Pressure: Maximum 100 PSI & Minimum 12 PSI
3) Engine Water Temperature: Maximum 215°F (102°C) & Minimum 0°F (-18°C)
4) Battery Voltage: Maximum 29 VDC & Minimum 23.6 VDC
5) Fuel: Minimum 18 Gallons
6) Transmission Oil Temperature: Maximum 302°F (150°C) & Minimum 32°F (0°C)
7) Transmission Oil Pressure: 0-400 PSI

F3 - Operator Keypad and Joystick Diagnostic Panel

Pressing the F3 key on the diagnostics menu opens the keypad/joystick diagnostic panel. This panel displays keypads, joysticks and switch positions for both the left and right operator control panels. When this panel is open, the normal operation of each control is disabled. Pressing and holding the ESC key for one second closes this panel and restores normal control functions.

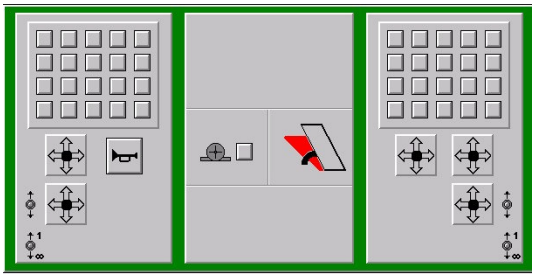

F4 - Jupiter Diagnostic Screens

Pressing the F4 key on the diagnostics menu opens a Jupiter Diagnostic Screen Panel. The Jupiter diagnostic screens provide the operator with a means of checking the integrity of the Jupiter Network. Most diagnostic checks can be performed without having to leave the operator's seat. *See Jupiter Troubleshooting Guide for Jupiter Diagnostics.*

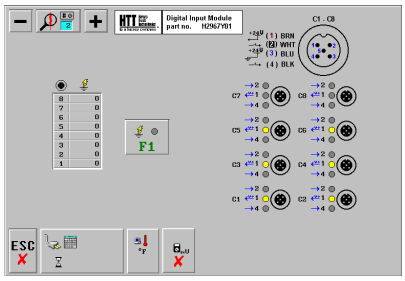

F3 - Calibration Menu

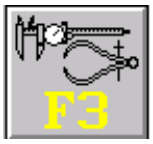

Pressing the F3 key on the second toolbar button set opens the calibration menu (Fig. 2). From this menu, the operator may choose to calibrate actuators, view calibration data, view or calibrate inclinometer, reset actuator zero or record surface or line zeros.

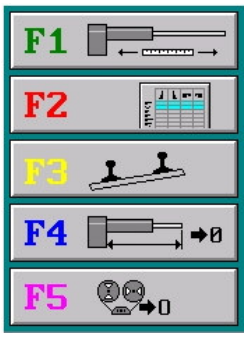

Fig. 2

Pressing F1 opens the Calibration Readout Screen *(See Fig. 3).*

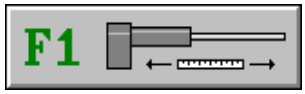

The Actuator Calibration Screen contains four groups of information boxes. Each group contains four small boxes that represent LOW, HIGH, DIGITS PER INCH and CURRENT POSITION for each ac tuator. The two upper groups of information boxes are for the surfacing receiver actuators; the lower two are for the liner linear actuators. LOW, HIGH and CURRENT POSITION are all digital values. *(See Fig. 3).*

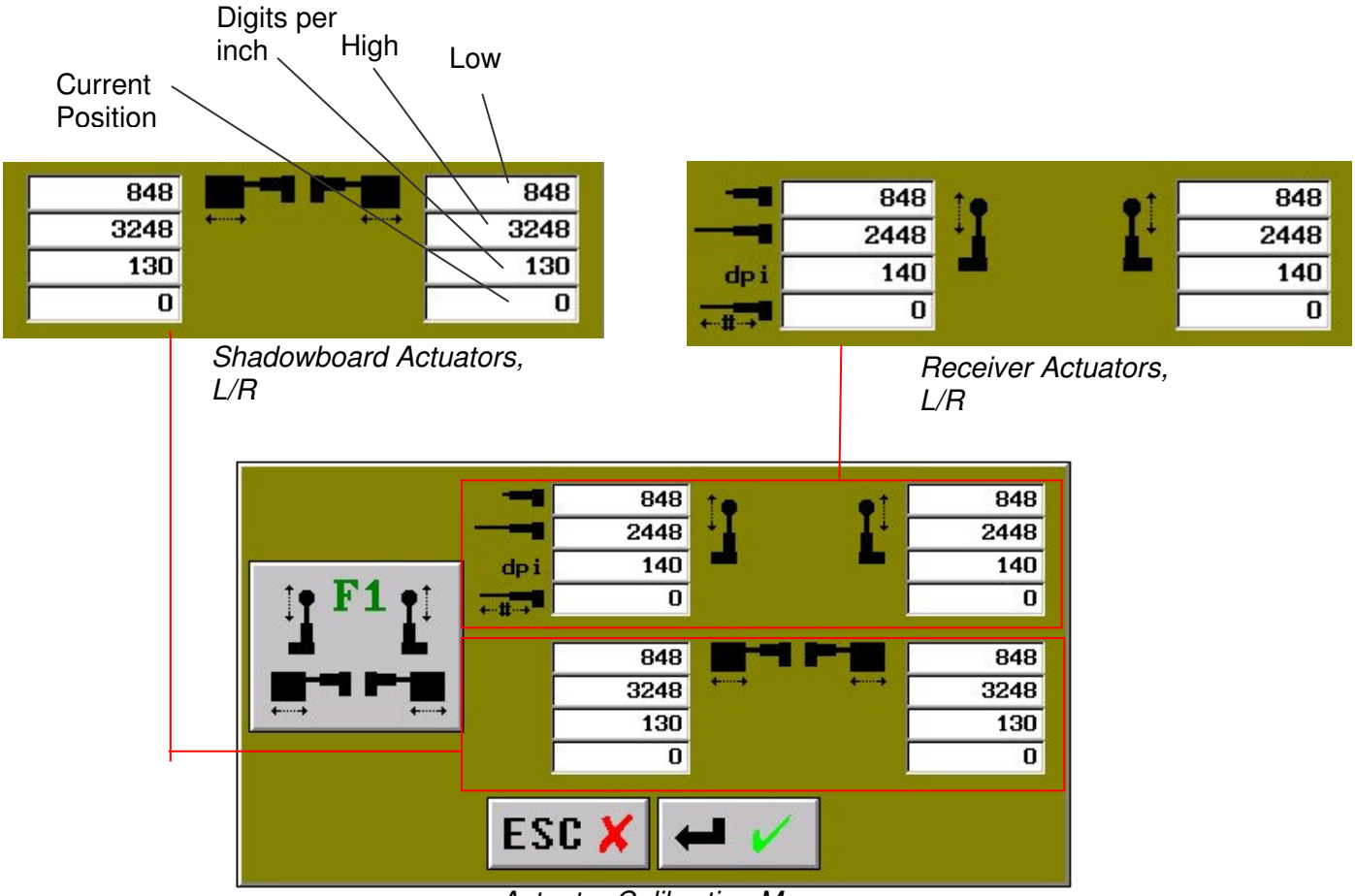

Actuator Calibration Menu
Fig. 3

On the *Select Actuator Screen*, there are four buttons (F1 - F4). In the default position, all four buttons are pressed in (See Fig. 4). Buttons may be selected individually or in groups. After selecting the desired actuators for calibration, press ENTER to start the automatic calibration process or ESC to cancel the selection. The screen will then go back to the Actuator Calibration Screen indicating calibration is complete. Hit ENTER to accept the new values or ESC to cancel. Pressing the enter button on any or all the actuators selected will cause the actuator to immediately go to it's high setting then low setting and Automatically set the dpi setting based on the high and low settings.

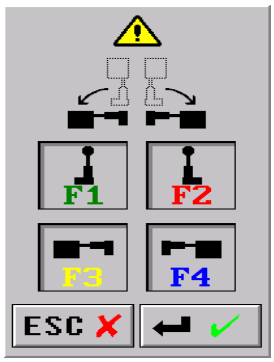

Select Actuator Screen
Fig. 4

F2 - Actuator Calibration Data Panel

Pressing the F2 key on the calibration menu opens the actuator calibration data Panel. The calibration data panel is mainly used for printing calibration data, modifying the surface or line record zeros and line zeros. This panel is the only panel that allows manual adjustments to the line zeros and surface or line record zeros.

The actuator calibration data panel provides a table of data pertaining to F1, F2 surface actuators and the F3, F4 liner actuators. This data consists of the line zeros, record zeros, LOW's, HIGH's, actuator target (desired) values, actuator actual values, beam differentials and zero differentials. The light blue data table area is used to modify the line zeros and surface or line record zeros. The light gray data table is information pertaining to actuator values. The light gray actuator values are displayed for convenience and cannot be changed from this panel.

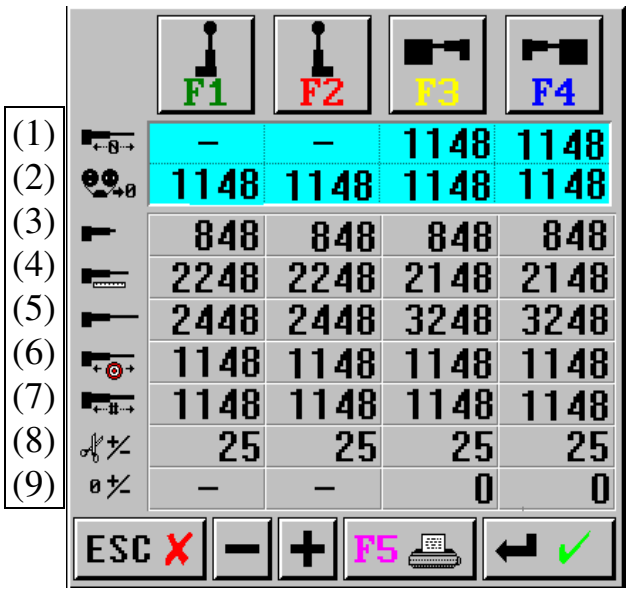

Actuator Calibration Data Panel:
(1) Line Actuator Zero (Mechanical) **(2)** Surface and Line Record Zero **(3)** Actuator LOW **(4)** Default Numbers **(5)** Actuator HIGH **(6)** Desired Actuator Position or Target Value **(7)** Actual Actuator Position **(8)** Beam Cut/Uncut **(9)** Differential

NOTE: When selecting one of the function buttons (F1-F4) the background color changes from light blue to yellow. Pressing F3 or F4 multiple times, toggle between line zero and record zero. When highlighted the value can be modified using the plus or minus keys or the PC keyboard can be used to enter the appropriate value.

First row of values in the light blue area are actuator zero values. There are NO zero values for the F1 and F2 surface actuator unless the machine is equipped with the optional surface fit software which is illustrated by a dash in the value field. The F3 or F4 line zero value is the position of the liner shadowboard when properly lining tangent track. If the lining zero needs modifying (tweaking) from this panel, select the proper line zero value, use the plus or minus keys to modify the zero value. The modified zero value shown in the table is used during the next tamping cycles. As long as the zero value remains selected (highlighted yellow) in the

table, pressing the ENTER key accepts the new value in the table and exits the "edit" mode for the selected actuator. Pressing the ESC key discards any changes, retains the old zero value in the table and exits the "edit" mode for the selected actuator. The new value is used during machine operation while this panel remains on the screen. **Pressing the ENTER key when no function button is pressed accepts all changes made to this panel** and returns to the actuator calibration selection menu. **Pressing the ESC key when no function button is pressed discards all changes made to this panel** and returns to the actuator calibration selection menu.

WARNING: *DO NOT Surface Track with F1 or F2 Surface Record Zero Selected (highlighted in yellow).*

NOTE: Normally the throws shift is used to modify "tweak" the lining of tangent track. When a sustained throws shift is added to either reference, the (F4) Line Zero Shift Panel (main view - second toolbar set, F3 calibration menu) can be used to automatically update the line zero value for the presently selected reference and zeros the throws shift value.

Immediately following the line zero values are the record zero values for each actuator. Pressing the F1or F2 selects the respective L/H or R/H surface record zero value for modifying. The surface record zeros may need to be modified, because of a sustained correction in the superelevation panel or the desired surface does not match the actual surface. Pressing the F3 or F4 selects the respective L/H or R/H line record zero value for modifying. The line record zero may need to be modified if all best fit curve tangents are greater than 0° 03´(degrees).

NOTE: The surface and line record zero values are normally set using the F5 Set Record Zero Panel (main view - second toolbar set, F3 calibration menu). The Record Zero process can be performed multiple times. Surfacing actuators move to the record zero position when the surface projector is OFF.

First row of values in the light gray table are actuator's LOW's, followed by actuator's default numbers and then the actuator's HIGH's.

Immediately following the actuator's HIGHs is the actuator's target (desired) values. The target (desired) value is defined as the current actuator setting required to achieve the desired geometry during production. When lining tangent track with no applied shift, the lining actuator desired or target position is equivalent to it's lining zero position. Any applied shift offsets the lining actuator desired position by the corresponding digits in the appropriate direction.

Immediately following the actuator's target values are the actuator's actual values. The actual value is defined as the actual value given by the actuator's potentiometer. For normal operation, the actual position should not deviate more than 1 to 2 digits from the target position.

Immediately following the actuator's actual values are the beams cut/uncut differentials. The beams cut/uncut differentials are updated whenever the actuator's are hunting the beam and the update of this value is NOT instant. This value is the average difference in actuator position where the shadowboard cuts and uncuts the beam and is made up of thousands of beam cuts and uncuts.

Immediately following the beam differentials are the zeros differentials. There is no zero differential value displayed for the surface actuators unless the machine is equipped with the surface fit option, which is illustrated by a dash in the value. The line/record zero differential is the difference between the lining zero and record zero in digits for lining shadowboard actuators. Normally this value is between zero and 25 digits, if less than (below) zero digits or greater than (above) 25 digits, check the angle of the lining shadowboard blade, I.E. blade must be perpendicular to the track. To check the angle, move the machine until the surfacing shadowboard is positioned on zero crosslevel. Use a plumb bob to check the liner shadowboard blade (lining edge) angle, if not vertical. Then adjust the liner shadowboard adjustment screws until the lining shadowboard blade (lining edge) is vertical. Press F5 to printout the data present on this panel along with the inclinometer setting, buggy information, workhead setting, default setting, etc.

F3 Inclinometer Calibration Panel

Pressing the F3 button on the calibration menu opens the inclinometer calibration Panel. The large information box displays the current inclinometer reading in inches. The upper two small information boxes display the current inclinometer reading as a voltage and in digits, respectively.

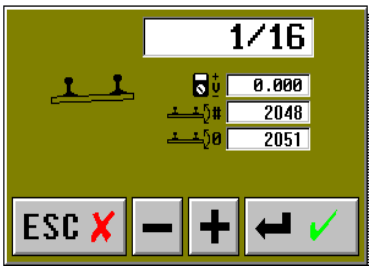

Inclinometer Calibration Panel

The bottom small information box displays the current inclinometer zero in digits. Pressing the plus or minus keys changes the current inclinometer zero by a digit per press (there are about four digits per sixteenth of an inch).
By pressing the plus or minus keys, the operator can adjust the inclinometer zero so that the displayed tilt on the inclinometer panel matches what is measured by a level board at the receiver buggy. Pressing the ENTER key saves all changes permanently and closes the panel. Pressing the ESC key discards any changes and closes the panel. **NOTE**: 2048 corresponds to zero volts for the inclinometer.

F4 Zero's Adjust Panel

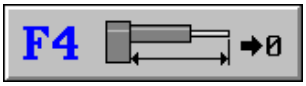

Pressing the F4 button on the calibration menu opens the Actuator Zero Adjust menu panel.
This panel consists of three buttons. Select F1 to adjust surface actuator zeros to the applied lift. Select F2 to adjust surface actuator zeros for cross-level correction. Select F3 to adjust line actuator zeros for throws correction.

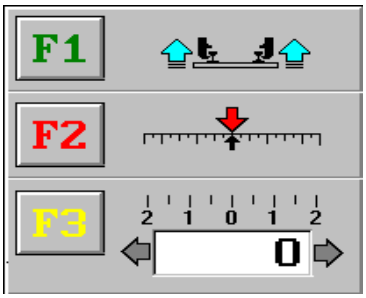

Zero's Adjust Panel

F1-Surface Zero Manual Adjust Panel

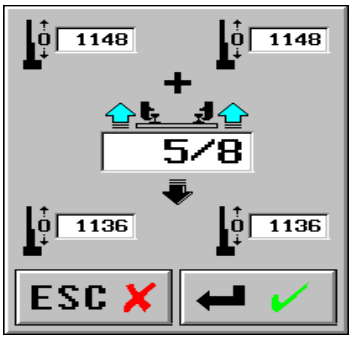

Use this panel when the lift as shown on the lift panel does not seem to match the actual amount of lift being applied to the track. The record zero procedure accessed through F5 on the calibration menu is normally used to set surface zeros. This panel allows you to manually change these zeros in order to adjust the indicated value of lift on the lift panel and yellow slider. Use the up and down cursor keys to vary the indicated lift in the large white box. Increase this value if the machine appears to lift track higher than is being indicated. Decrease this value if the screen indicates values higher than the track is actually being lifted. I.e. set this value to the actual lift being produced.

The values displayed at the top of this panel are the current surface actuator zeros. The values displayed at the bottom of this panel are what the surface actuator zeros will become in order to apply the desired correction to indicated lift.

NOTE: Subsequently using the record zero procedure (F5 on calibration menu) with the surface projector ON will result in new zero values for the surface actuators and any previous manual variation applied with the above panel will be lost.

Press ESC if you do not want the surface zeros to be changed.

F2-Surface Zero Manual Adjust – Superelevation Correction

Use this panel when a persistent amount of superelevation correction is needed for the machine to leave the correct superelevation.

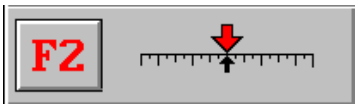

The record zero procedure accessed through F5 on the calibration menu is normally used to set surface zeros. This panel allows you to manually change these zeros in equal and opposite directions so that superelevation correction can be set to zero.

Use the left and right superelevation correction keys on the right hand keypad to vary the indicated superelevation correction in the center of this panel.

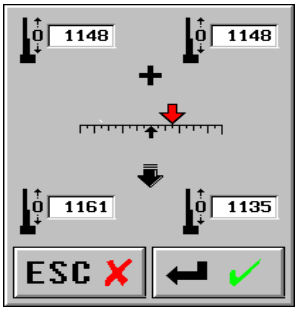

The values displayed at the top of this panel are the current surface actuator zeros. The values displayed at the bottom of this panel are what the surface actuator zeros will become so that the superelevation correction can be set to zero. When the ENTER key is pressed, the new surface zeros will be installed and the superelevation correction will be set to zero without changing the current lift target positions.

NOTE: Subsequently using the record zero procedure (F5 on calibration menu) with the surface projector ON will result in new zero values for the surface actuators and any previous manual variation applied with the above panel will be lost.

Press ESC if you do not want the surface zeros to be changed.

F3-Line Zero Manual Adjust

If the LINE ZERO is accurate, lining tangent track with a shift of zero will result in balanced left and right throws to improve the line without displacing track to the left or right overall.

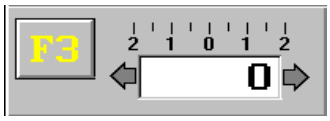

If a sustained shift is needed to prevent track being continuously displaced left or right, this panel will apply this shift to the current line zero and set the shift to zero.

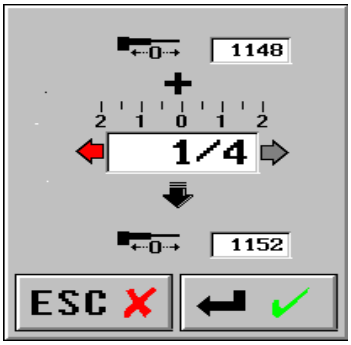

The value in the upper right box is the current line zero for the present line reference. The value in the lower right box is the new line zero that will be applied by pressing ENTER. The value in the large white box is the current throws shift, which can also be seen at the bottom of the throws panel.

Press ESC if you do not want the current line zero to be changed.

F5 - Record Zero Calibration Panel

Pressing F5 on the calibration menu opens the record zero calibration panel which provides for the recording and calculation of "record zero" values for surface and line. Before selecting this procedure the machine would be setup for work on tangent track (without vertical curvature) with one or both projector systems turned on. It's recommended that a F2 Erase/Wipe be preformed before starting this procedure.

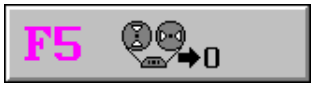

The values displayed in the large white boxes are in inches with respect to the pre-existing zeros. Therefore the closer the final values are to zero, the less change you are making. Below each large white box are three smaller boxes that show actuator position in volts and digits followed by the record zero in digits. Just above the ESC and ENTER buttons is a display showing the number of feet that have been recorded since the procedure started.

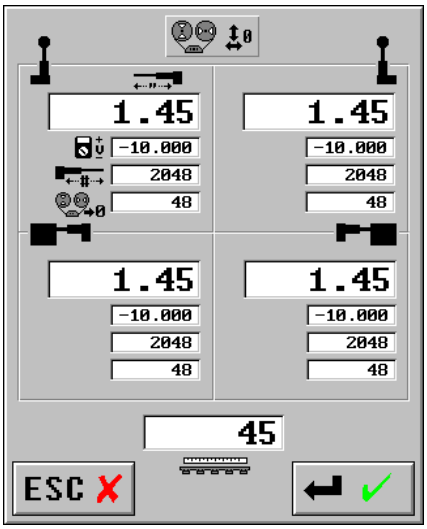

Record Zero Calibration Panel

If the surface projector is off, the record zero for surface actuators will not be changed.

F4 - Change Graph Scales Panel

Pressing F4 on the second toolbar button set opens the graph scaling panel. This panel is used to change the scale in a graph. The graphs consist of surface, throws, superelevation and line.

The best fit will automatically select the appropriate scale for each graph, but it may be necessary to adjust one or more of these graph scales to view some portion of the recorded track.

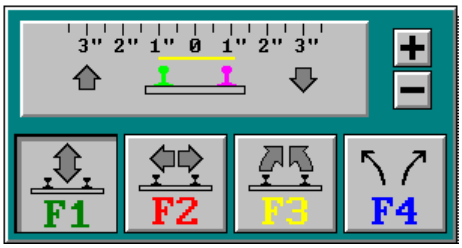

Graph Scales Panel

Function buttons F1 through F4 selects a graph scale for modification. Then use the plus/minus (+/-) keys to change the selected scaling.

F1 selects the surface lift graph. This graph has four scales to select from; 0 to 1.75 inches, 0 to 3.5 inches, 0 to 7 inches and 0 to 14 inches. F2 selects the line throws graph. This graph has four scales to select from; 0 to 2 inches, 0 to 4 inches, 0 to 8 inches and 0 to 16 inches. F3 selects the superelevation/crosslevel graph. This graph has four scales to select from; 0 to 4 inches, 0 to 8 inches, 0 to 16 inches and 0 to 32 inches. F4 selects the line graph. This graph has four scales to select from; 0 to 4.5 degrees, 0 to 9 degrees, 0 to 18 degrees and 0 to 36 degrees.

Press ENTER or ESC accepts any graph scale changes and closes the panel.

F5 - The Workhead Configuration and Depth Control Panel

Pressing F5 on the second toolbar button set opens the Clamp/Workhead select panel. Select either F1 for the Clamp Squeeze Panel or F2 for the W/H Configuration and Depth Control Panel.

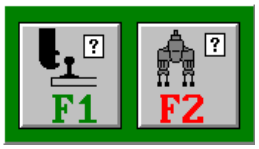

Clamp/Workhead Select Panel

The Clamp Squeeze Panel (right) displays the adjustable values of the clamp frame pressure "switches". The default values for all can be reset by the operator. The F1 key is used to select which item to adjust. Use the plus/minus keys adjust the selected arrow to the desired setting.

The normal hook pressure setting is 800 - 1000 PSI. If high ballast conditions exist it may be necessary to raise the hook pressure to approximately 1500 PSI. Press the ESC key or ENTER key to close the panel.

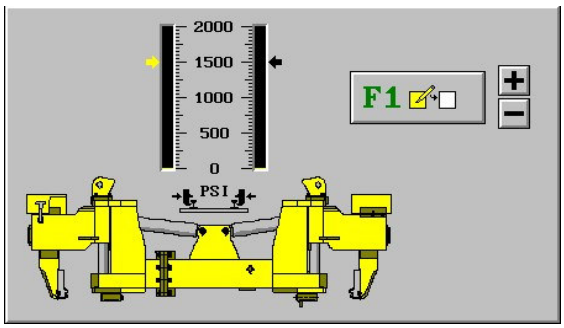

Clamp Squeeze Panel

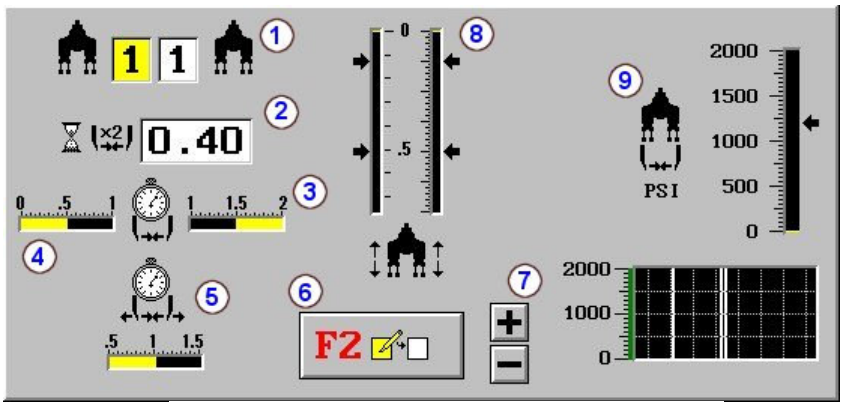

Workhead Configuration and Depth Control Panel

Pressing the F2 button will bring up the Workhead Configuration and Depth Control Panel (left). This panel allows you to change the settings used to control the workheads. Use the F2 key to select the value to change. See the list below for a description of each switch and its function.

When changing superelevation substantially in a curve, there are times that it may be desirable to multi-tamp one rail and single tamp the other. The computer is programmed to allow the workheads to tamp a varying number of tamps individually.

NOTE: When workhead(s) are down feeding and before the lower (transducer) position is reached, if the Workhead Squeeze In and Out keys (operator L/H keypad) are pressed together, the squeeze cylinders will pulse in/out to help penetrate foul or cemented ballast.

1.) Tamps Per Cycle – Use this timer to select the number of tamps per cycle for each side.

2.) Multi-Tamp Timer - When tamping a tie more than once (double, triple etc.), the multi-tamp timer box indicates the time for which the workhead is raised after squeezing before reversing direction prior to the next squeeze. The displayed value is the delay in seconds. A nominal setting is 0.25 seconds; 0.40 is the default time. This timer can be set from 0.00 to 2 seconds. Pressing the plus or minus keys changes the time by 0.01, 0.10 and 1 second depending on how long the key is held down.

3.) Maximum Squeeze Timer: - The workheads will finish squeezing if this time is reached even if the squeeze pressure switch is not made. The maximum squeeze timer can be adjusted between one and two seconds. For nominal ballast conditions the setting is 1.5 seconds (default), but when tamping in loose (new construction) ballast a typical setting may be about 1.2 to 1.3 seconds. Pressing the ENTER or ESC keys removes the panel and saves any changes made.

4.) Minimum Squeeze Timer - The squeeze pressure switch will be ignored until the workheads have squeezed for this amount of time. The minimum squeeze timer can be adjusted between zero and one second. For nominal ballast conditions the setting is 0.5 (one half) second (default), but when tamping in foul or cemented ballast a typical setting may be about 0.7 to 0.8 seconds. Note that in extremely fouled conditions, the Workhead Squeeze-In key, located on the operator's L/H keypad, can be used to extend the squeeze duration (time). Press and hold this key before Squeeze-In normally terminates will extend the squeezing until the key is released. This feature may be useful where additional squeeze time is desirable for a few tamps.

5.) Wiggle Timer - "Wiggling" allows the workheads to penetrate compacted ballast by alternately squeezing the paddles in and out as the workheads come to depth. The wiggle

timer determines the amount of time before wiggling will begin. The default wiggle time is one second. The operator can adjust this time from 0.5 to 1.5 seconds using the increment or decrement buttons as appropriate.

6.) F2 - Use the F2 key to select the value to change.

7.) Plus/Minus Keys – Use the Plus/Minus keys to increase or decrease selected value.

8.) Workhead Depth Control - Use the plus or minus keys to change the high and low positions for each workhead.

NOTE: There are two high positions for each workhead. High positions are independent for switch mode and production mode. When in switch mode, it is recommended that the high positions be set so that the workheads clear the top of the rail. This allows the workheads to be traversed without upfeeding beforehand which can save a lot of time when tamping a switch.

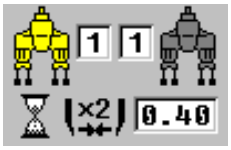

The switch mode key on the left hand keypad can be used to toggle between switch mode and production mode while the workhead panel is open which makes it easy to see and change each of the possible high positions.

9.) Workhead Squeeze Pressure - Use the plus or minus keys to set the adjustable workhead squeeze pressure "switch". The normal squeeze pressure setting is between 1200 and 1600 PSI. Adjustment may be needed for certain ballast conditions. The diagnostic histogram in the bottom right corner of the panel continuously displays the current workhead squeeze pressure.

<u>The Workhead Indicators</u> - *Main View Status Panel*

The workhead vibrator indicators are shown to the left on the status panel. The vibrator symbol corresponds to the left or right side of the machine. When the vibrator symbol is dark gray the vibrator is OFF, and ON when symbol is yellow. The number of tamps per cycle is shown in the small box next to the corresponding vibrator symbol. This value can be changed using the workhead configuration panel or by entering a shortcut key sequence. The white box under the right vibrator symbol displays the multi-tamp timer setting (0.40 is the default time). This value can only be changed using the workhead configuration panel.

NOTE: The shortcut sequence to adjust the number of tamps for the left or right vibrator is as follows: First if there is a pop out panel active, use the ESC key to remove the popped out panel, so that pressing the plus or minus keys is not interpreted as a required change to an item on the pop out panel. Next, to increase the number of tamps hold down the plus key, or to decrease the number of tamps hold down the minus key, then press a vibrator key associated with the workhead(s) for which the number of tamps is to be changed. If a plus or minus keys is being held down, pressing a vibrator key will not have the usual effect of turning that vibrator on or off.

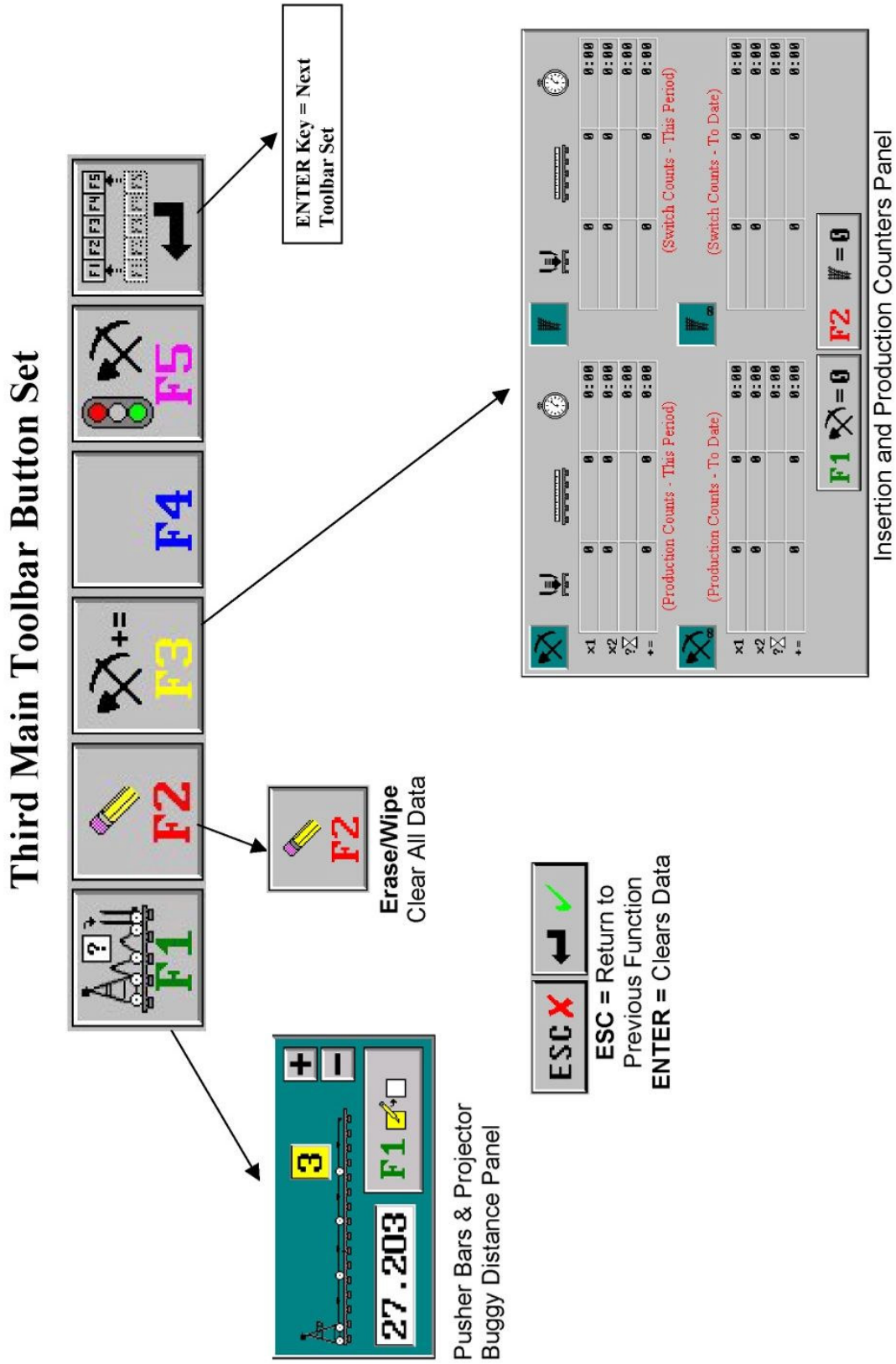
Third Main Toolbar Button Set
F1
F2
F3
F4
F5
ENTER Key = Next Toolbar Set
F2
Erase/Wipe
Clear All Data
Insertion and Production Counters Panel
(Production Counts - This Period)
(Production Counts - To Date)
(Switch Counts - This Period)
(Switch Counts - To Date)
F1
F2
ESC
ESC = Return to Previous Function
ENTER = Clears Data
27.203
F1
Pusher Bars & Projector Buggy Distance Panel

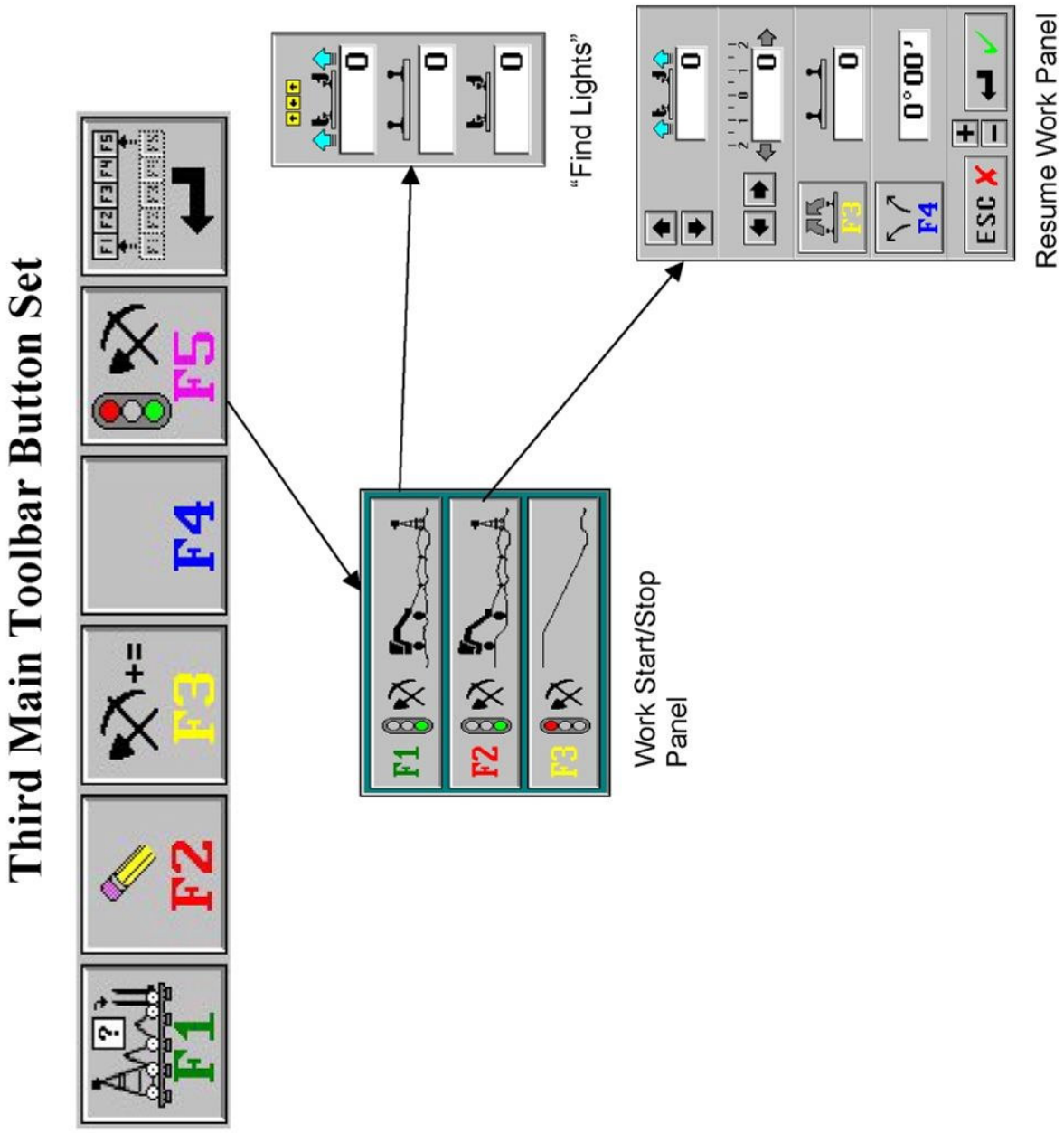
Third Main Toolbar Button Set
F1
F2
F3
F4
F5
F1 F2 F3 F4 F5
"Find Lights"
F1
F2
F3
Work Start/Stop Panel
F3
F4
ESC
0°00'
Resume Work Panel

The Third Toolbar Button Set

The third toolbar button set is present whenever the ENTER key has been pressed from the second toolbar button set.

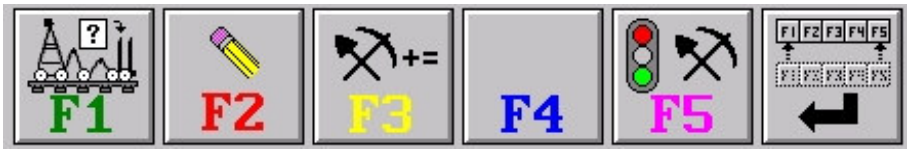

F1 – The Pusher Bars Panel

Pressing the F1 key on the third toolbar button set (left) opens the pusher bars panel (below). The current number of pusher bar buggies in use between the projector and the front of the machine is displayed in the highlighted information box. Pressing the plus or minus keys changes the number by one count. The track symbol alsochanges to reflect the number of pusher bars. Up to three pusher bars can be deployed, or none at all. The distance between the projector and shadowboard, which can be seen in the information boxes below the track symbol, automatically changes and the appropriate internal correction ratios are re-calculated. The left information box displays the whole number of feet and the right box displays number of inches between the projector and shadowboard.

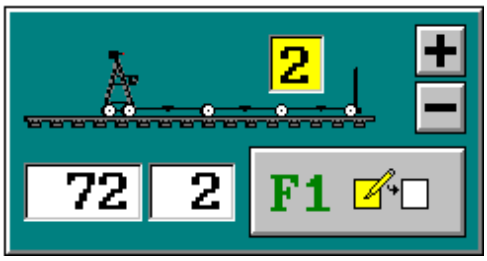

Pusher Bars Panel

Pressing ENTER closes the panel and accepts all entries. Pressing ESC closes this panel and discards any changes made.

F2 – Erase/Wipe Track Button

Pressing F2 on the third toolbar button set pops out the ESC/ENTER panel. ENTER will clear the previously worked track or track recording that can be seen in the Expanded Track View.

ESC returns to the toolbar set. If ENTER is pressed, the yellow fit lines and red throws line will default to straight lines on zero. Clearing the Expanded track view in this way may be needed when preparing to tamp track at a different work location, such as when starting a new work day. It is not necessary to do this prior to starting a new recording.

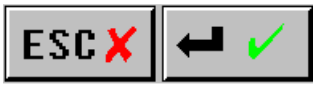

ESC or ENTER Key

NOTE: When a recording is cleared in this way it is *not* deleted from the machine's filing system (memory). It will still be possible to "reload" the cleared recording at a later time if desired.

F3 - Insertion and Production Counters Panel

Pressing the F3 button on the second toolbar button set opens the Insertion and production counters panel. A standard machine is equipped with panels, which accumulate totals for switch and production mode tamping. Single and double tamping insertion counts are shown, along with distance tamped and time taken. Triple and quadruple tamp insertions are combined with double tamps on this panel.

Data to the left on this panel applies to work done in production mode. Data on the right side of the panel applies to work done in switch mode. Like a trip meter on the odometer of a car, the upper counts can be reset (use F1 and F2 to clear these counts for production and switch counts respectively). The operator cannot reset the lower counts.

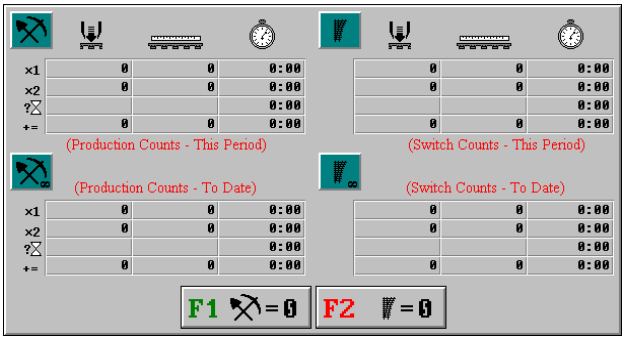

Insertion and Production Counter Panel

F5 – Work Start/Stop/Resume Panel

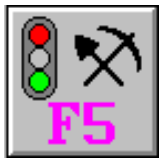

Pressing F5 on the third toolbar button set opens the Work Start/Stop/Resume panel. This button is duplicated on the second toolbar set of the expanded view. This panel is used to: ramp-in at a new location (F1), resume work previously interrupted by a ramp-out (F2) and ramp-out and save values (F3).

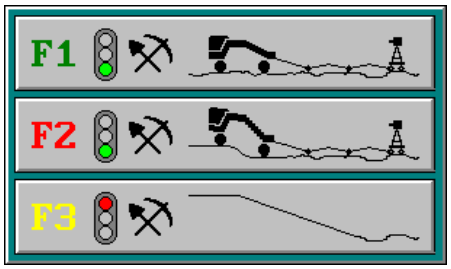

F1 "Finding the Lights" or Ramp-in at new location.

F2 Resume Work; When F2 is pressed the resume work panel pops out.

F3 Run-out or Ramp-Out of Surface and/or Line.

NOTE: Before selecting this function, ensure that the machine buggies are properly setup, the proper number of buggies are selected, the proper lining reference is selected and desired projector(s) is on.

The F1-F3 keys on this panel are used as follows:

F1 "Finding the Lights": This procedure applies to unrecorded track.

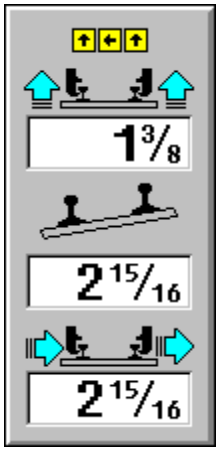

"Find the Lights"

When starting at a new location (unrecorded track) use the F2 Wipe button (third toolbar set) to clear all previous track data and set the starting footage to zero. If superelevation or curvature is not zero for the track to be tamped, then use the manual change procedures to set the proper superelevation or curvature. The surface lift will automatically ramp to the lift default value. If the default value for lift is not the desired lift then use the surface lift change panel to enter the appropriate lift before using "finding the lights." (See NOTE on Setting Manual Lift). When F1 "finding the lights" (zero setup) is selected, the dialog information panel will appear showing lift, superelevation and line at the shadowboard. These numbers are determined from the current beam position and the inclinometer reading. If the values displayed on this panel are large, it may be desirable to move the machine slightly (if possible), but NOT more than five feet in either direction (zero feet), before pressing ENTER.
When the ENTER key is pressed, hunting of the beam will stop and the actuators will be positioned at the point of cutoff. Point of cutoff sets control points so that the first tie to be tamped will not be lifted, lined or changed in superelevation. Surfacing and lining will automatically ramp at preset rates to the desired values. For example, if no manual changes were made, the superelevation would automatically ramp to zero and line would automatically ramp to the established liner zero and surface would automatically ramp to the default lift value.

If ESC is pressed, the procedure will be aborted and the actuators will be returned to their original positions.

NOTE: Setting Manual Lift The procedure for entering a manual lift is as follows: After an F2 wipe, open the surface lift change panel. Press either the up or down arrow key on the operator's R/H keypad only once. This will install a control point at zero feet and the desired lift will be zero. To increase the lift press the left arrow key or use the right arrow key to decrease the lift. Press the ENTER key after the appropriate surface lift is set. This accepts the changes and pops off the surface lift change panel.

Default Values for Surface Lift The surface lift default value is the upper lift value in the Defaults Table Panel (F5 on the third expanded view toolbar button set). If no lift is set, then this value is used to set the desired surface lift at the end of a ramp-in. In this instance the default lift is 1 inch and the ramp rate is 80 feet.

Using the "Finding the Light" procedure when surface and line is previously recorded.

When recording track with the surfacing system on and the machine has surface fit software, the recording will contain a plot of both surface rails. After the recording is complete, System V will automatically best fit the surface and line. The surface fit will normally have control points at each location of maximum and minimum lift.

The best fit automatically sets a starting lift, this lift is usually close to the “finding the lights” position. Using F1 “Finding the Light” is recommended before starting to tamp recorded track. When F1 “finding the lights” (zero setup) is selected, the dialog information panel will appear showing lift, superelevation and line at the shadowboard. When the ENTER key is pressed, hunting of the beams will stop, the actuators will be positioned at the point of cutoff and the yellow fit line is ramped to the appropriate best fit lift.

NOTE: With best fit of surface, the F1 “Finding the Light” can be used at any starting location of recorded track.

If ESC is pressed, the procedure will be aborted and the actuators will be returned to their original positions.

F2 “Resume Work”; The Resume Work panel will open using the values that were stored by the F3 key of the work Start/Stop/Resume panel thereby giving the opportunity to inspect, retain or change the display values before they are applied. If values were not stored using the Work Start/Stop/Resume Panel this panel, the Resume Work Panel, allows you to re-enter this data manually before pressing ENTER to resume work.

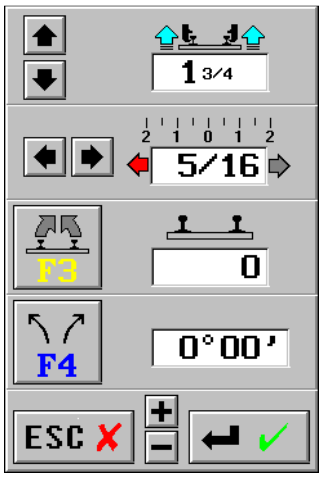

Resume Work Panel

NOTE: Any adjustment made to surface, throws (line shift) or line is an “A” point adjustment.

Use the up/down cursor keys to change the lift (if necessary).

Use the left/right cursor keys to change the shift (if necessary).

The F3 and F4 keys can be used to select superelevation and curvature for modification prior to resuming work.

F3 Begin a run-out at this location. When this button is pushed, the current values of lift (and line shift) will be memorized for future reference. A surface ramp-out will be visible in the surface trace panel. The default rate of change for surface is used. If desired, use the surface rubber band panel to change the length of the ramp-out before continuing. Manual changes to both lift and line can, of course, continue to be made while the ramp-out is in progress.

Using the F2 - Wipe Button (third toolbar), or F1- Record Button (second toolbar) will not cause the memorized values at the start of a run-out to be lost.

An example is where tangent track is being tamped as the machine approaches an unrecorded curve which also needs to be tamped and lined. The procedure would be as follows:

- At a suitable point to begin recording the curve, stop tamping and press the F3 button on the above panel. It doesn't matter that no run-out is to be performed, the F3 key is just being used to save the current value of lift and shift.

- Record the curve in the usual way.

- Return to zero feet and press the F2 button on the Work Start/Stop Panel. This will restore the lift that was in use before recording the curve.

- Resume tamping.

NOTE: If you forget to use the F3 button to perform a run-out (done manually instead), the values in the F2 resume panel will be the values of the last run-out. The F2 values can be modified and when modifying, they are modified as an “A” point value. Also, F1 (find the lights) can be used a few feet prior to the start of the run-out to ramp the surface back to the original value.

EXPANDED TRACK OVERVIEW

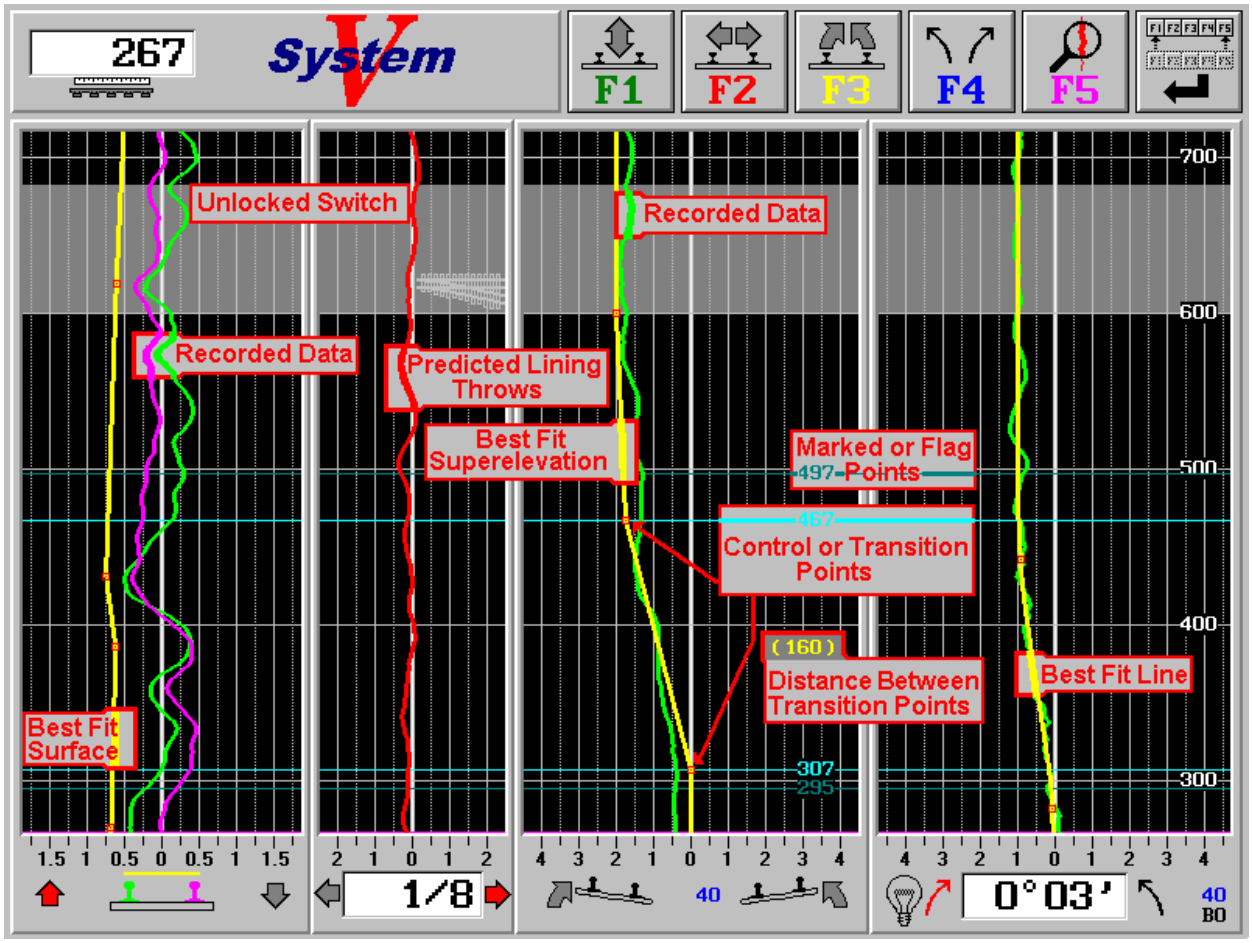

(1) Surface View (with optional Surface Fitting Software): Green Trace = L/H Rail as Recorded, Purple Trace = R/H Rail as Recorded & Yellow Line = Surface Fit or Predicted Lift.

(2) Throws View: Red Trace = Predicted Lining Throws. The numerical value in the white display, between the arrows, is the manual correction applied by the operator (applied in addition to throws).

(3) SuperElevation or CrossLevel View: Green Trace = Superelevation/Crosslevel as Recorded, Yellow Line = Predicted Superelevation/Crosslevel, Light Cyan Horizontal Line = Transitions and Cyan Horizontal Line = Flag or Marker Points. The numerical value in blue between the two track symbols at the base of this panel (40 in this instance) is the distance from the current location of the machine to the next transition point.

(4) Line View: Green Trace = Track Line as Recorded & Yellow Line = Predicted Lining. The numerical value in the white display, between the line arrows, is the degree of curvature. Light Bulb = ON/OFF for the optional LineLite system. The 40 & B0, bottom right of display, is the distance to the next transition and best fit style/sensitivity.

EXPANDED TRACK VIEW

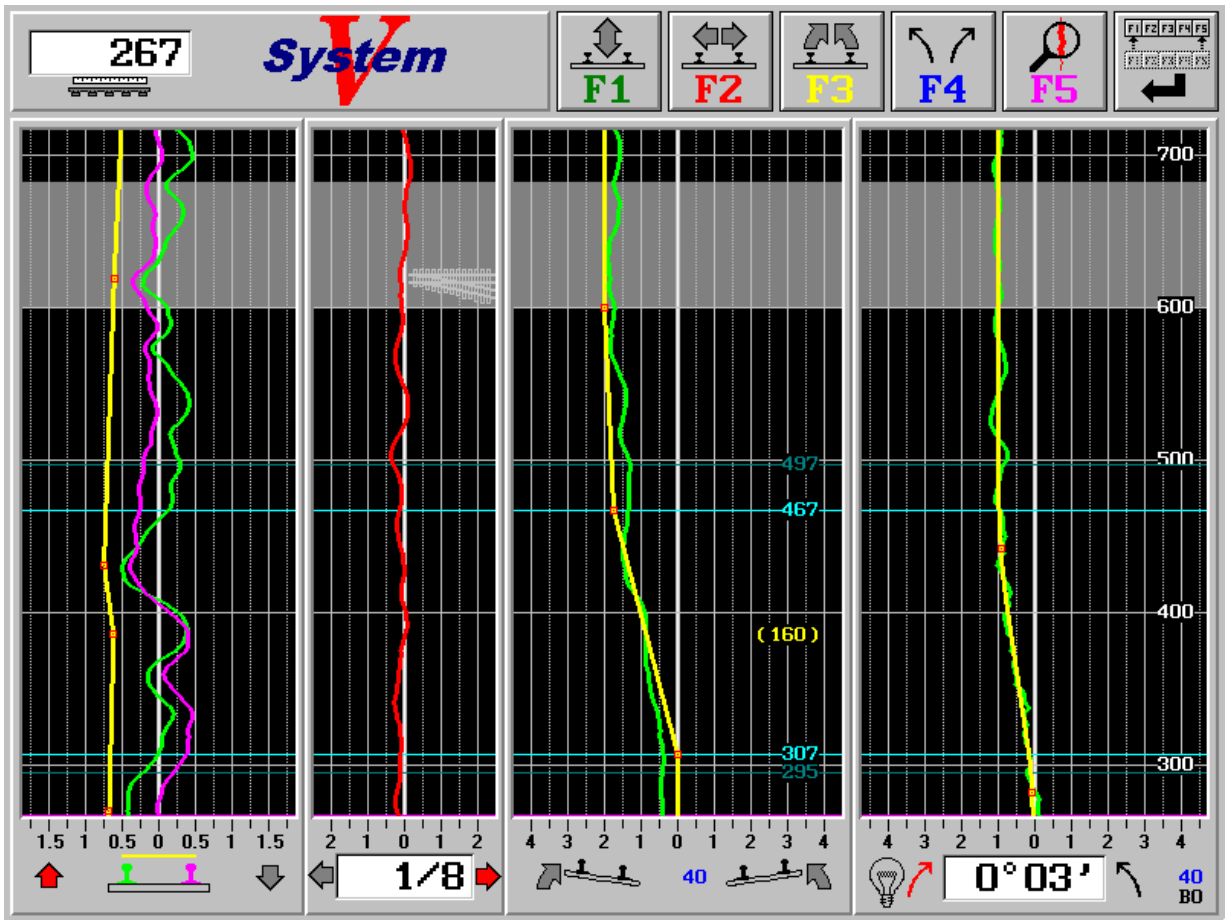

To View this Screen, Press the Magnifying Glass Button on the R/H Operator Keypad.
The Expanded Track View utilizes a different primary toolbar button set than the work screen.

In this primary set, buttons F1 through F4 select Surface, Throws, SuperElevation and Line for modification respectively. The F5 button toggles between the Normal Expanded Track View (450 feet of track) and the Compressed View (complete track or curve).

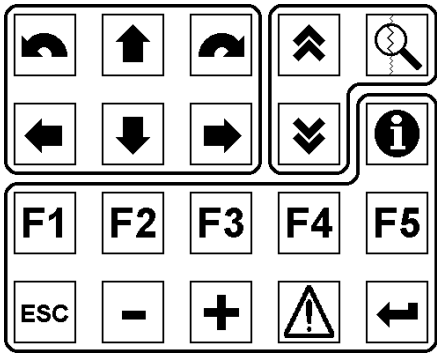

The expanded track view has three toolbar button sets. The ENTER key cycles between these in the same way as it cycles the three toolbar sets available from the normal work screen.

Some of the work screen toolbar buttons are duplicated in the Expanded Track View sets for convenience (turning projectors on and off, changing reference and so on).Certain functions can not be performed from the Main or Work view toolbars, such as ramps-in, ramps-out, best fitting, etc. These functions, plus many other options (described on page 3-56 / 65) become available by utilizing the Expanded Track View Button (magnifying glass) as shown, (Located on Operator R/H Arm Panel). The corporal stripes allow you to page forward and back through track data.

NOTE: When no other panel is open, using the plus and minus keys allows you to page in smaller steps than the corporal keys.

Pressing the expanded track view button (key) will change the display to the expanded track view screen, along with the first of the expanded track view toolbars, as shown below.

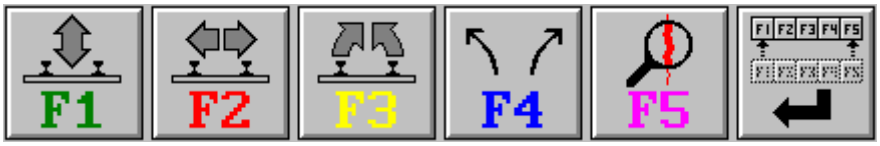

By depressing the “Enter” key, the second toolbar for the expanded track view will appear as shown below.

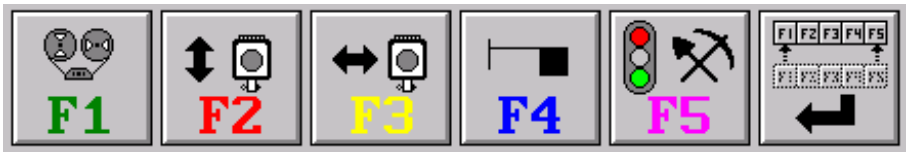

As above, pressing the “Enter” key again will bring up the third toolbar in the expanded track view group, (shown below).

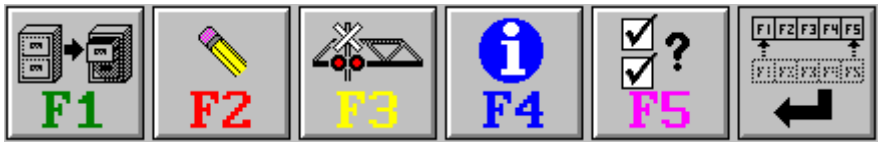

The following is a brief description of the functions and options on each toolbar.

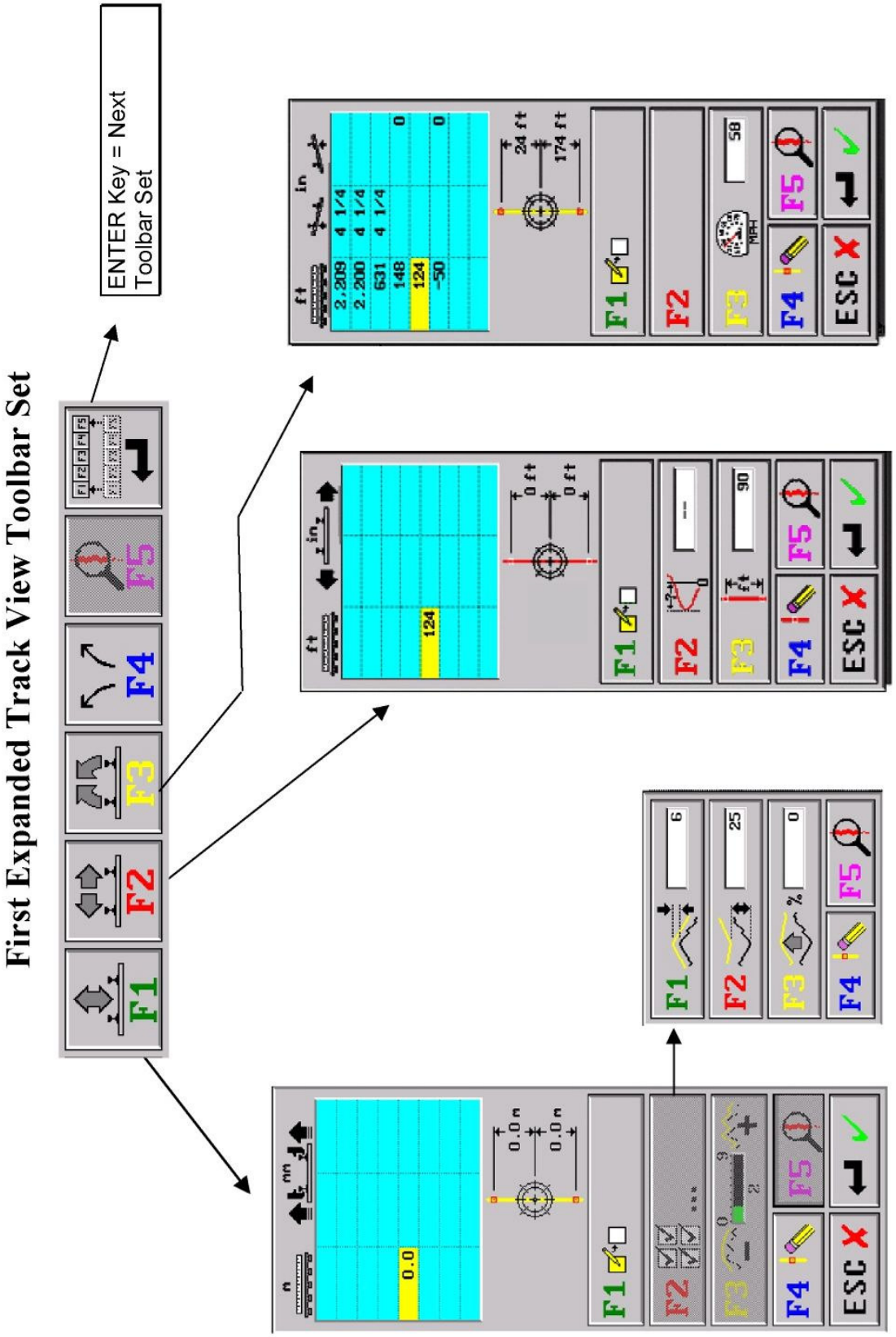
First Expanded Track View Toolbar Set
ENTER Key = Next Toolbar Set
F1
F2
F3
F4
F5
ESC

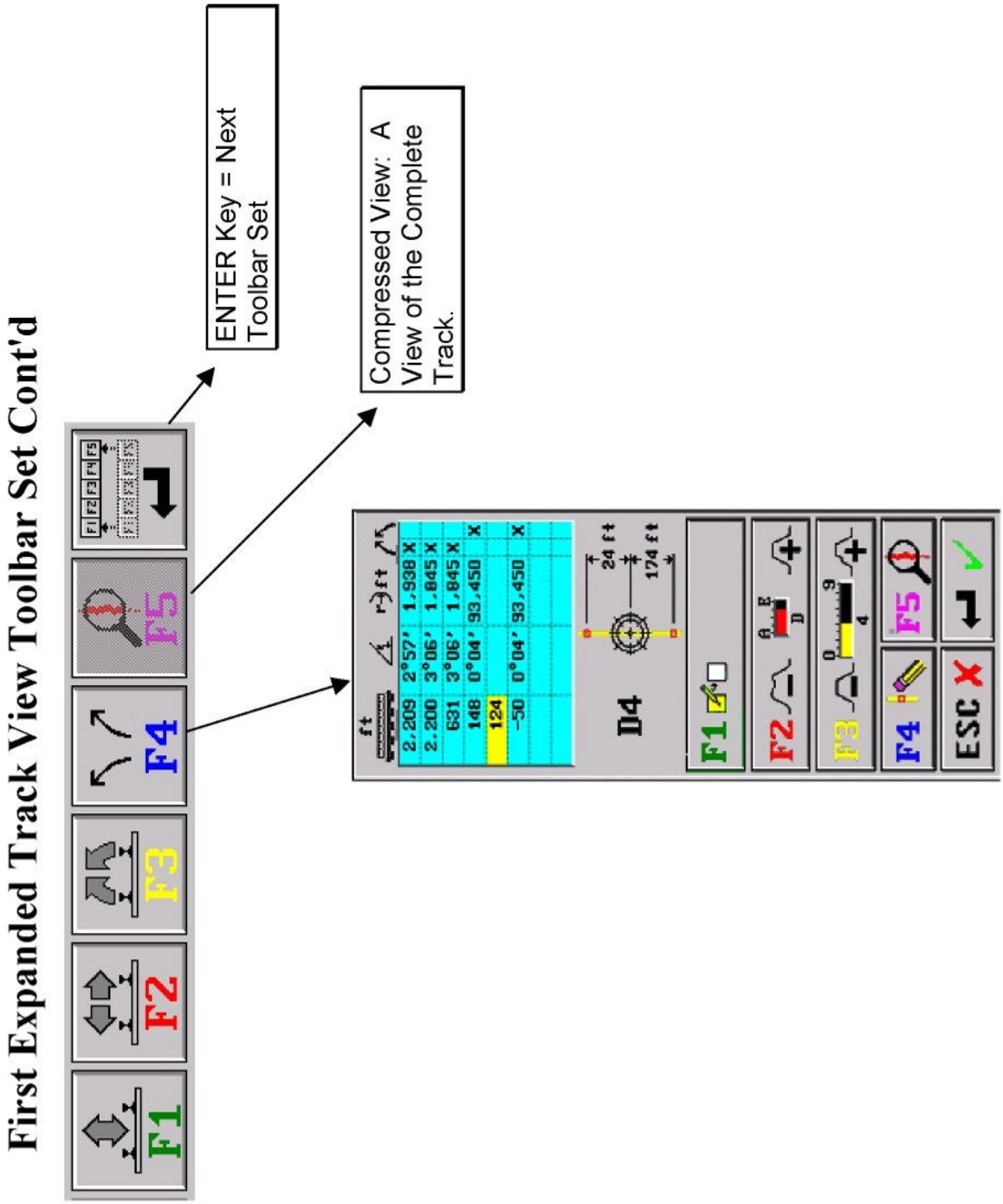
First Expanded Track View Toolbar Set Cont'd
F1
F2
F3
F4
F5
ENTER Key = Next Toolbar Set
Compressed View: A View of the Complete Track.
D4
24 ft
174 ft
ESC

Expanded Track View Toolbar Buttons

The Expanded Track View must first be selected before the operator can enter or modify ramps, record track, change best fits to recordings, enter or change fixed points or recall previous recordings from the machines file system (memory). This function is provided by the toolbar buttons available in the expanded view in combination with the right keypad.

The First Toolbar Button Set - *Expanded Track View*

The first toolbar button set in the Expanded Track View provides the entry point for operator control of all work programmed for the track ahead of the machine. This same toolbar set is used for modifying "best fits" of recorded track and for control information for track that is not recorded before being tamped.

Each of the first four function buttons on this toolbar select a graph for control. These graphs are laid out in the same sequence as the track graph panels on the screen, namely F1-Surface, F2-Throws, F3-Superelevation and F4-Line. The F5 key toggles between a compressed view, which shows a complete track recording and best fit at once or the standard Expanded Track View which is 450 feet in length.

The other toolbar button sets provide for recording track or recalling previously recorded track from the machines file system (memory).

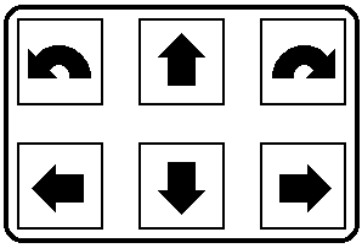

As soon as a graph has been selected by pressing F1, F2, F3 or F4 in this toolbar button set, the appropriate panel will open and the selected graph will be in rubber banding mode. While in this mode, the interpretation of the keys in the upper half of the right keypad will be different until the rubber banding mode is terminated by pressing the ENTER key to Accept, or ESC key to Discard changes made.

NOTE: Although graphs can be accessed in any sequence, changing some will impact others. Changing superelevation will influence the optional surface fit. Changing the best fit for line will change the fit for superelevation and so on. It is strongly recommended that a particular sequence of graphs be followed when changes are made. That sequence is LINE, SUPERELEVATION, THROWS and finally SURFACE (skipping over any that do not need changing). Note that for consistency with the rest of this manual, the following sections will not appear in this sequence.

Rubber Banding

To avoid repetition, some general terms, concepts and keypad usage that apply to rubber banding will be described in this section. For each graph, control is applied through a sequence of control points. The variation of control between control points is assumed to change in a straight line from one point to the next. If you imagine an elastic or rubber band stretched between the control points, then you have a clear picture of what happens to control at intervening points when any one point is moved.

When a graph is selected for modification, a target or cursor is positioned at the current location. The "corporal" keys jump (or snap) the target to the next available control point. Using any of the up, down, left or right cursor keys on the right keypad will "drag" the selected control point in the direction of the arrow on the key. While in the rubber banding mode, a panel adjacent to the graph being modified will be open showing details of the control point currently selected. When a control point is dragged, the numerical effect is immediately shown on this panel.

Target

Pressing the plus/minus (+/-) keys will move the target or cursor along a "rubber band line" *between* two control points, at a rate of one foot per press. Holding one of these keys down will auto-repeat to move the cursor continuously. To accelerate the rate of the cursor, hold down both plus/minus keys together, but first select the plus or minus key for direction. This allows any track location to be selected quickly. When the target has been placed between control points, *using an up/down/left/right key will create a new control point* at the selected track location. The operator simply continues to use the cursor keys until the newly created control point is positioned appropriately. This is the method of inserting control points. When a control point is dragged to or beyond another control point, the two points will be combined.

Pressing the ENTER key exits the rubber banding mode and *RETAINS* any changes made. Pressing the ESC key exits the rubber banding mode and *DISCARDS* any changes that have been made. Either way, the cursor keys revert to their normal function of providing manual control over lift, line and superelevation as described in the normal or work view section.

In the rubber banding mode, the superelevation change keys on the right keypad (the curved arrow keys in the cursor group) provide a short cut to selecting the adjacent graph for modification (rubber banding). Pressing one of these keys is equivalent to pressing the ENTER key (changes are retained) and selecting for change the adjacent graph.

Hints: To see what is underneath a “rubber band” panel, press and hold down the alarm key on the right hand keypad. When you release the key, the panel will automatically revert to the last display.

F1 - The Surface Lift Change Panel - ***Expanded Track View***

Pressing the F1 button on the first toolbar button set opens the Surface Lift Change Panel.

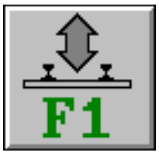

The surface lift change panel is used to create or modify existing surface lift, run-ins or run-outs (ramps) and modify lift between control points. This procedure is sometimes called “rubber banding or rubber band mode.”

When surface is being modified in the rubber band mode (adding, deleting or modifying control points) the surface lift change panel is open to the right of the surface graph.

Ramping Surface at the Default Rate

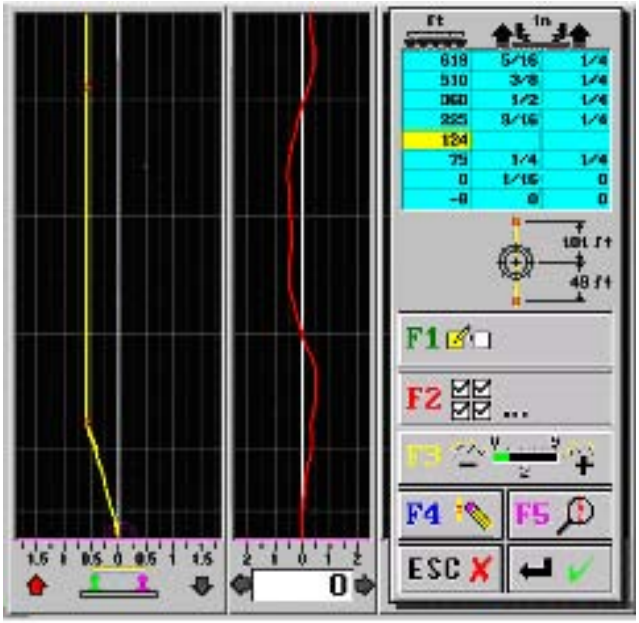

To facilitate the ramping in and out of lift on track that has not been prerecorded or without surface fitting, the rubber-banding mode of surface includes a special feature that is not available for the other graphs. At the last control point, press the "up corporal" key. Next use either the left or right cursor arrow key to apply the default run-in or run-out rate for surface. Continue using the left/right arrows until the lift at the end of the ramp has been reached. Up or down cursor arrow keys can then be used to modify ramp length if necessary. Press ENTER to ACCEPT or ESC to DISCARD changes.

NOTE: Without recorded surface the F2 and F3 keys on this panel have no effect. There is a shortcut sequence that accepts changes and opens another graph change panel. When a function (rubber band) panel is open the right curved arrow (crosslevel) key accepts changes and moves one function panel to the right. The left curved arrow (crosslevel) key accepts changes and move one function panel to the left.

The following description is for a machine equipped with Optional Surface Fitting Software.

When recording track with the surfacing system on, the recording will contain a plot of both surface rails. After track recording is complete, System V will automatically best fit the surface, superelevation and line. The surface fit will normally have control points at each location of maximum and minimum lift as described by the F2 and F3 keys in this panel. Before proceeding with any rubber band style changes (adding, deleting or modifying control points), make necessary adjustment to the default value and/or F2 or F3 to achieve a desired overall fit. Making any change using F2 or F3 will result in any manual changes (made by dragging control points) being discarded. Press ENTER to ACCEPT or ESC to DISCARD changes.

When Starting on Lifted Track (See F5 – Work Start/Stop Panel, page 3-54).

F1 – Change Control Points

Press the F1 button to select a cell on the control points cell table. When a cell is highlighted yellow, the PC keyboard can be used to type in a new value. Selecting another existing control point can be done by pressing “corporal up” or “corporal down”. Selecting a location between existing control points press plus/minus key. When there is no control point at the selected location, all cells in the table will be blank except for the location.

F2 - Surface Fit Panel Button

Press the F2 button to open an additional surface fit panel. This additional panel will provide the operator with five (5) surface fit options to choose from. These buttons (described below) allow the operator to make the necessary adjustments required to achieve best fit.

F1 – Surface Change - Minimum Lift 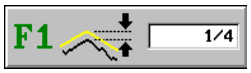

The minimum lift (expected clearance over high points) is displayed in the white box on this button. If it is desired to change this number, press F1. The button will depress and the white box will turn yellow to indicate this value can be changed. Use the plus and minus keys to change the value. When you have finished making changes to this value, press ENTER or any Function Key to ACCEPT changes. Press ESC to DISCARD changes.

F2 – Surface Change – Maximum Lift

The maximum allowable lift at any location is displayed in the white box on this button. If it is desired to change this number, press F2. The button will depress and the white box will turn yellow to indicate this value can be changed. Use the plus and minus keys to change the value. When you have finished making changes to this value, press ENTER or any Function Key to ACCEPT changes. Press ESC to DISCARD changes.

F3 – Low Point Compensation Percentage 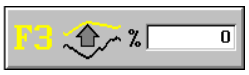

The Low Point Compensation Percentage is displayed in the white box on this button and is used to apply more lift to low points in an effort to combat “track memory”. If it is desired to change this number, press F3. The button will depress and the white box will turn yellow to indicate this value can be changed. Use the plus and minus keys to change the value. When you have finished making changes to this value, press ENTER or any Function Key to ACCEPT changes. Press ESC to DISCARD

NOTE: When finding the lights, if a lift value is not set in the surface lift panel or without surface data recorded (optional surface fitting), the starting ramp will ramp to the lift default value, in the defaults table panel. (upper number in this panel) This value is used to set the surface lift. *(Described on page 3-54 or 3-80), Work Start/Stop/Resume Panel).*

F4 - Delete a Control Point.

F5 - Zoom this View Only, while Depressing the F5 key.

NOTE: Any manual adjustment to recorded surface is displayed in the left hand slider of the surface lift panel. Also ***Surface Fit Option:*** Plotting a curve with the surface projector **ON, Enable** surface fit and plotting with surface projector **OFF, Disable** surface fit. After a curve is plotted, the *option cannot be turned ON or OFF*.

F3 - Surface Fit Sensitivity Button

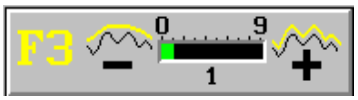

Use the F3 button to change the *surface sensitivity*. When the F3 button is pressed, the button will appear “pressed in”, allowing the operator to increase or decrease the value by using either the plus (+) or minus (-) keys. Note that entering a larger the value will increase the variation of the lift. The greater this variation, the smaller the lift and therefore the less ballast required.

F4 - Delete a Control Point (See Previous Page)

F5 – Zoom this view only (See Previous Page)

F2 - The Lining Throws Change Panel - *Expanded Track View*

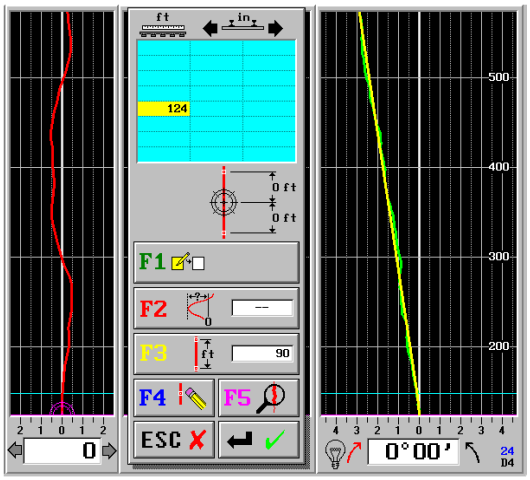

Pressing F2 on the first toolbar button set pops out the Lining Throws Change Panel. When throws are being modified in the rubber band mode, the following panel is open to the right of the throws graph. Before proceeding with rubber band style changes, the default value for maximum throw should be examined. Making any changes using the F2 key will discard any manual changes previously made.

Rubber banding works somewhat differently for throws than it does for any of the other graphs. The usual purpose of making changes to throws is to provide lining to monuments or stakes. As such points are usually a fixed distance apart, the "corporal" keys jump by a distance that can be set by the F3 button on this panel. Default is 100 feet.

For newly recorded track, there will be no control points for throws. The normal sequence is to use the corporal and plus/minus keys to move the cursor or target to the distance of the first monument or stake. Left and right arrow keys will then insert a control point and modify the throw to the desired value. The up corporal key will jump forward by the default distance to the next monument where the process is repeated.

Although the same procedures can be used for track that has not been previously recorded (the red throws line will initially be a straight line on zero), the actual throws that result behind the machine will depend on existing track errors (which are unknown).

F1 – Change Control Points

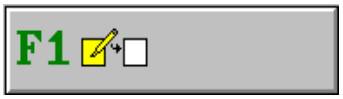

Press the F1 button to select a cell on the control points cell table. When a cell is highlighted yellow, the PC keyboard can be used to type in a new value. Selecting another existing control point can be done by pressing “corporal up” or “corporal down”. Selecting a location between existing control points press plus/minus key. When there is no control point at the selected location, all cells in the table will be blank except for the location.

F2 - Throws Change - Maximum Throw

The maximum allowable throw at any location is displayed in the white box on this button. If it is desired to change this number, press F2. The button will depress and the white box will turn yellow to indicate this value can be changed. Use the plus or minus keys to change the value. When you have finished making changes to this value, press ENTER or any Function Key to ACCEPT changes. Press ESC to DISCARD changes.

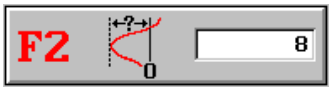

F3 - Throws Change - Default Peg Spacing

The default distance between throws that will be entered is displayed in the white box on this button. If it is desired to change this number, press F3. The button will depress and the white box will turn yellow to indicate this value can be changed. Use the plus or minus keys to change the value. When you have finished making changes to this value. Press ENTER or any Function Key to ACCEPT changes. Press ESC to DISCARD changes.

F4 - Delete a Control Point.

F5 - Zoom this View Only, While Depressing the F5 key.

F3 - The Superelevation/Crosslevel Change Panel - Expanded Track

Pressing F3 on the first toolbar button set pops out the Superelevation Change Panel. When super elevation is being modified in the rubber band mode, the following panel is open to the right of the superelevation graph.

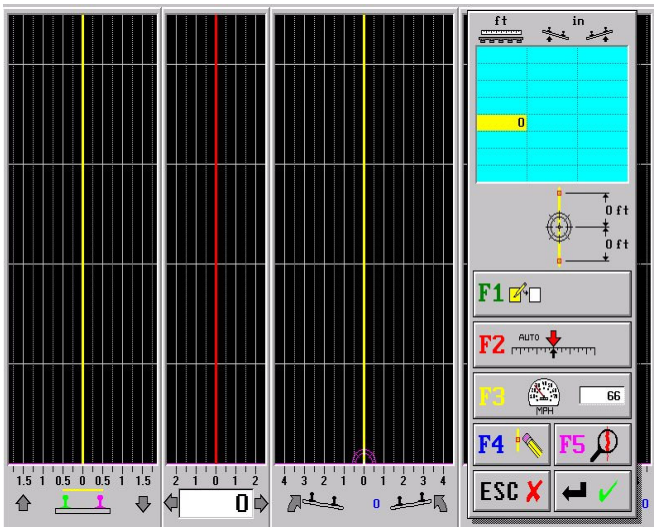

F1 – Change Control Points

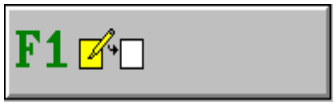

Press the F1 button to select a cell on the control points cell table. When a cell is highlighted yellow, the PC keyboard can be used to type in a new value. Selecting another existing control point can be done by pressing “corporal up” or “corporal down". To select a location between existing control points, press the plus or minus key. When there is no control point at the selected location, all cells in the table will be blank except for the location. To drag C control point, use the up/down arrow keys when the target is on a control point.

F2 - Superelevation Compensation (Enable/Disable).

Use the F2 button to enable or disable Superelevation compensation. When enabled, this feature will automatically apply additional correction to the preexisting error in super. The success of this compensation is monitored at the inclinometer and automatically adjusted. The black arrow on the superelevation panel shows the amount of compensation. It is recommended that this feature **NOT** be used when tamping turnouts as the weight of the turnout will be more dominant. **NOTE: This feature will only work on pre-recorded track.**

F3 - Superelevation Change - Train Speed

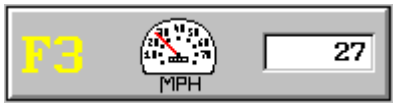

Press F3 if the superelevation in curve bodies is to be set using a train speed. This is influenced by track curvature and unbalance, which is set on the defaults screen. When F3 is pressed, this screen button will appear depressed and the white box will turn yellow to indicate the train speed can be changed. Use the plus/minus keys to change the value (if necessary). When you have finished making changes to this value, press ENTER or any Function Key to ACCEPT changes. Press ESC to DISCARD changes. The resulting rate of change of superelevation in spirals will be checked against the default allowable limit and the ramp rate will be shown in red where this is exceeded. In such cases it will be necessary to manually correct this, usually by extending ramp distances.

F4 - Delete a Control Point.

F5 - Zoom this View Only, While Depressing the F5 key.

<u>F4 - The Line Change Panel</u> - *Expanded Track View*

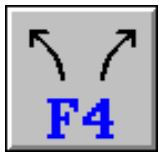

Pressing F4 on the first toolbar button set pops out the Line Change Panel. When line is being modified in the rubber band mode, the line rubber band panel is opened to the left of the line graph. The F2 and F3 buttons are used to change the fit style and fit sensitivity that influence how the fit (the yellow line) is computed from the recorded curvature (the green line). See the following sections for details on fit style and sensitivity. Selecting F2 or F3 (and any subsequent change to these values) will result in a new fit being computed. When a new fit is computed, any manual changes previously made by rubber banding will be discarded. For this reason, corrections using rubber banding are best made after you are satisfied with the fit and the resulting throws.

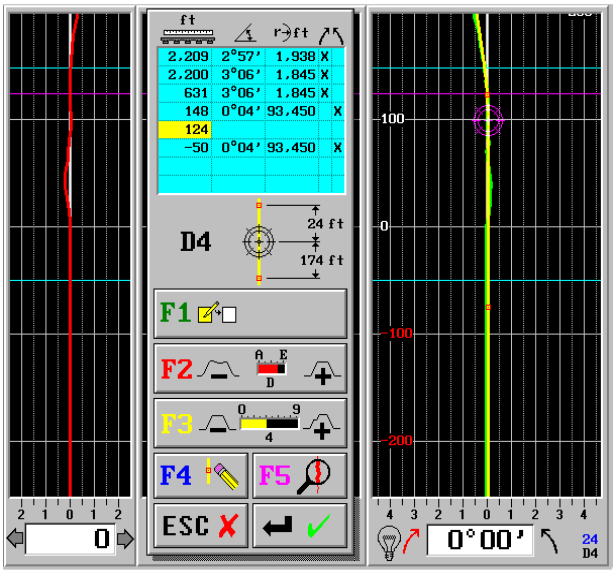

NOTE: For each control point in line, there is a cyan (light blue) line drawn horizontally across the graphs. This line is shown at the true location of the start or end of spirals. The associated control point is shown at a location several feet before the cyan line at a position where the recording of a spiral *appears* to start or end.

This separation is known as the graph offset*. The footage value for the point in the rubber band panel is for the true position (the cyan line). When dragging a point to match tags on the track, the location of the cyan line is what is important. When dragging a point to match the shape of a recorded curve, the location of the gun-sight or target is what is important.

When dragging a control point left or right (changing the degree of curvature), if the next point ahead has the same value, it also will be dragged. This makes it easy to keep the curvature of the body of a curve the same at each end.

When dragging a control point up or down (changing the location or footage of a point), if there is a control point in superelevation at the same location, it also will be dragged.

F1 – Change Control Points

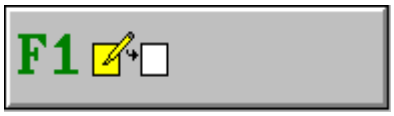

Press the F1 button to select a cell on the control points cell table. When a cell is highlighted yellow, the PC keyboard can be used to type in a new value. Selecting another existing control point can be done by pressing “corporal up” or “corporal down”. To select a location between existing control points press the plus/minus key. When there is no control point at the selected location, all cells in the table will be blank except for the location.

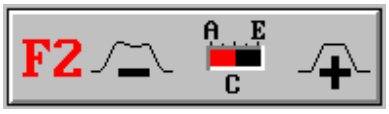

F2 - Best Fit Style or Method

Use this button to select the STYLE or METHOD of best fit to be used. The button will appear depressed to indicate the best-fit style can be changed. Use the plus/minus keys to change this selection. When you have finished making changes, press F2 to end this mode.

The smallest throws (weakest correction) will result when using Style A. The largest throws with the most correction will result when using Style E. The default Style is C. To change default, *see Defaults Table, Third Toolbar F5, Page 3-86.*

The current possible selections are:

A – Average fit — The fit for line is established purely by using an average of the recorded data. This style is best suited for areas such as yards

* The graph offset represents an effect arising from the distance between the shadowboard and projector being much longer than the distance between the shadowboard and the receiver. This makes the recording of a curve appear to occur before the true position of the curve. This effect will vary depending on the number of buggies selected.

where it is difficult or impossible to establish the true design geometry of the track.

NOTE: The fit sensitivity (see next) will effect the length of this average (as well as the number and location of transitions for locating superelevation changes). ***Average fits cannot be rubber banded.***

B – Smoothed body[⊕] Gradual variations in curvature are permitted. **No Correction** is made for estimated **Projector** movement due to track errors.

C – Smoothed body Gradual variations in curvature are permitted. This Fit Style **Corrects** for estimated **Projector** movement due to track errors.

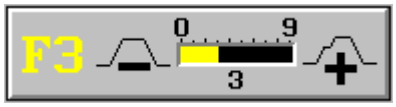

D – Constant body Curvature outside of spirals is forced to be constant. **No Correction** is made for estimated **Projector** movement due to track errors.

E – Constant body Curvature outside of spirals is forced to be constant. This Fit Style **Corrects** for estimated **Projector** movement due to track errors.

F3 - Best Fit Sensitivity

This button provides the operator with a way of fine tuning the best fit. The button will appear depressed to indicate the best-fit sensitivity can be changed. Use the plus/minus keys to increase or decrease this value. When you have finished making changes, press F3 to end this mode.

Sometimes an error in the spiral or body[*] of a curve may appear to be an additional body. On other occasions, a small body in a compound curve may be interpreted as a defect or error. Changing the best-fit sensitivity provides influence over how System-V distinguishes between these situations and is frequently the easiest way to get the desired result.

Increasing fit sensitivity increases the tendency to recognize more curves with smaller bodies and decrease throws. Decreasing sensitivity will tend to recognize fewer curves with larger bodies and increase throws. In general, it is desirable to use the lowest sensitivity and increase it only if the fit fails to recognize spirals or compound curvature. For this reason, the default value for a new recording is always zero.

F4 - Delete a Control Point.

[⊕] On long curves with bodies over 400 feet, permitting gradual variations in curvature will often result in smaller, more balanced throws, without compromising the ability to correct errors.

[1] Body is a shorthand term for a length of constant curvature. A curve with more than one body is referred to as a compound curve.

F5 - Zooms Throws & Line View Only, While Depressing the F5 key

F5 - The Compressed Track View - *Expanded Track View*

Pressing F5 on the first toolbar button set selects the Compressed Track View. When the compressed view is selected the screen display will change to a complete section of recorded (plotted) or worked track over 450 feet in length. Pressing either the ESC or ENTER key will change the display to its previous view. To see an example of the compressed view see Figure 1: Standard Machine Without Optional Surface Fitting Software or Figure 2: Machine With Optional Surfacing Fitting Software.

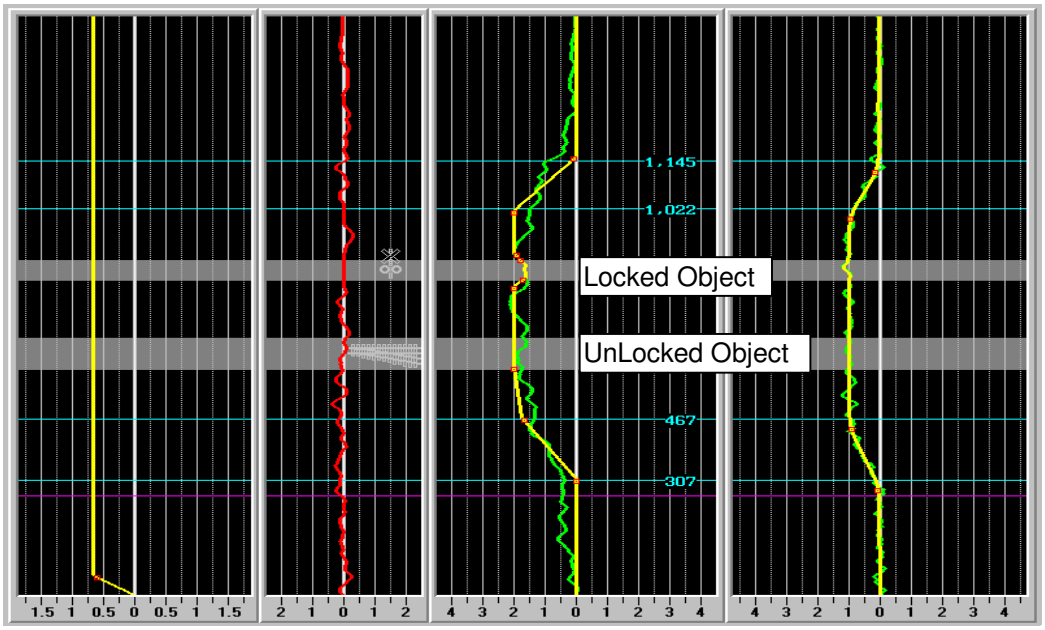

Fig. 1: *Standard Machine Without Optional Surface Fitting Software*

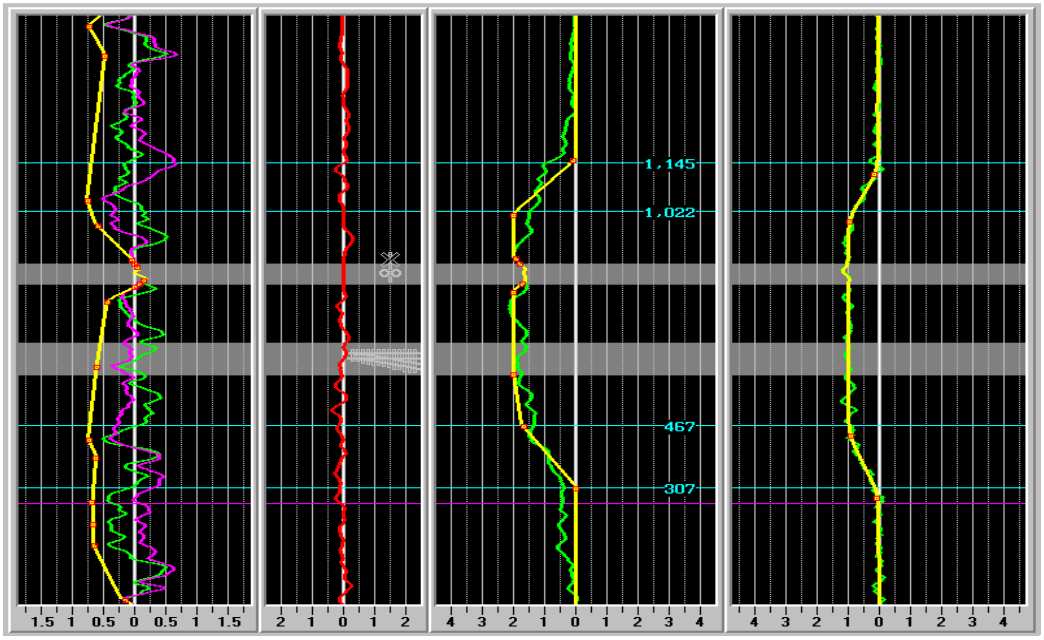

Fig. 2: *Machine With Optional Surfacing Fitting Software*

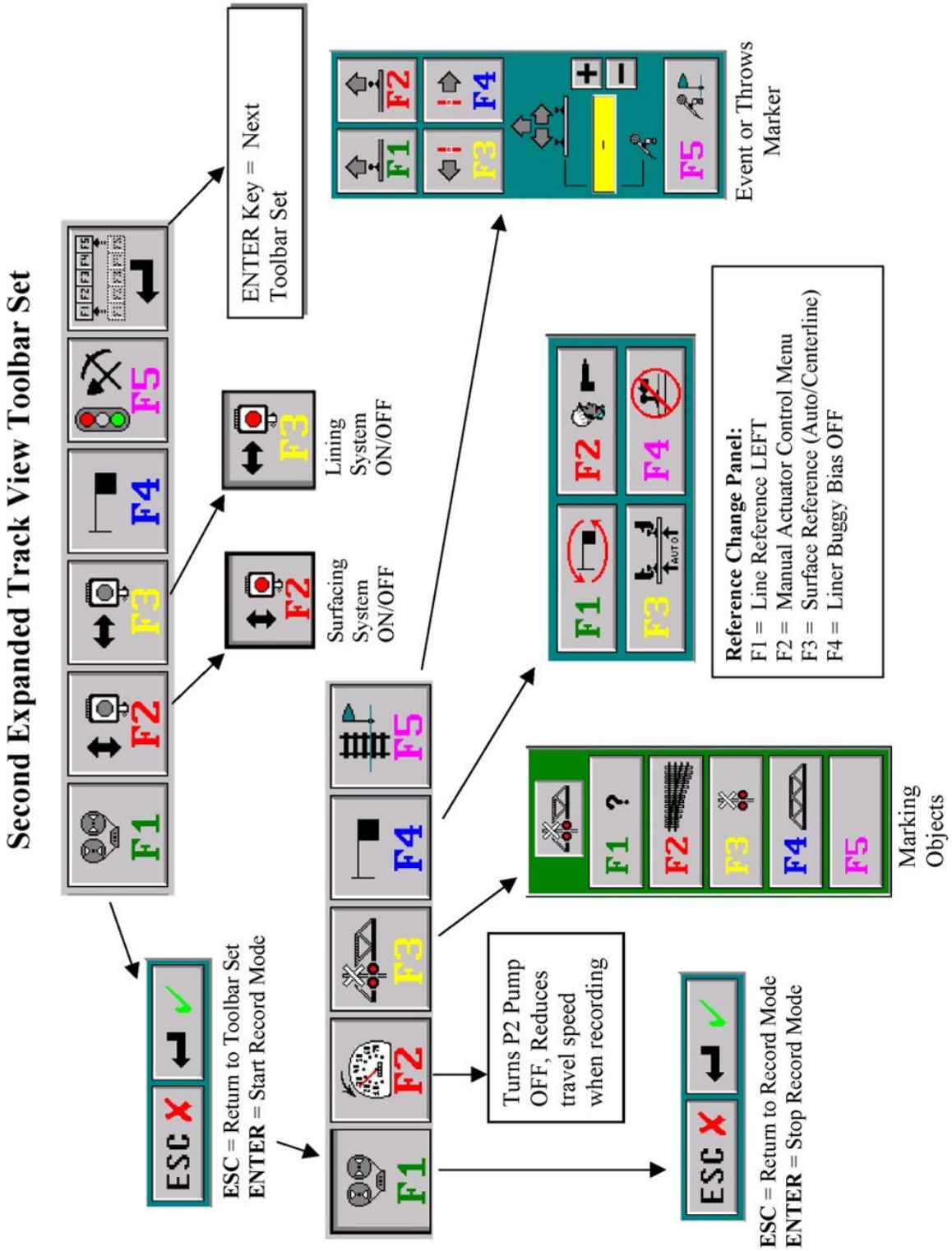
Second Expanded Track View Toolbar Set
F1
F2
F3
F4
F5
ENTER Key = Next Toolbar Set
Lining System ON/OFF
Surfacing System ON/OFF
ESC = Return to Toolbar Set
ENTER = Start Record Mode
Turns P2 Pump OFF, Reduces travel speed when recording
ESC = Return to Record Mode
ENTER = Stop Record Mode
Event or Throws Marker
Reference Change Panel:
F1 = Line Reference LEFT
F2 = Manual Actuator Control Menu
F3 = Surface Reference (Auto/Centerline)
F4 = Liner Buggy Bias OFF
Marking Objects

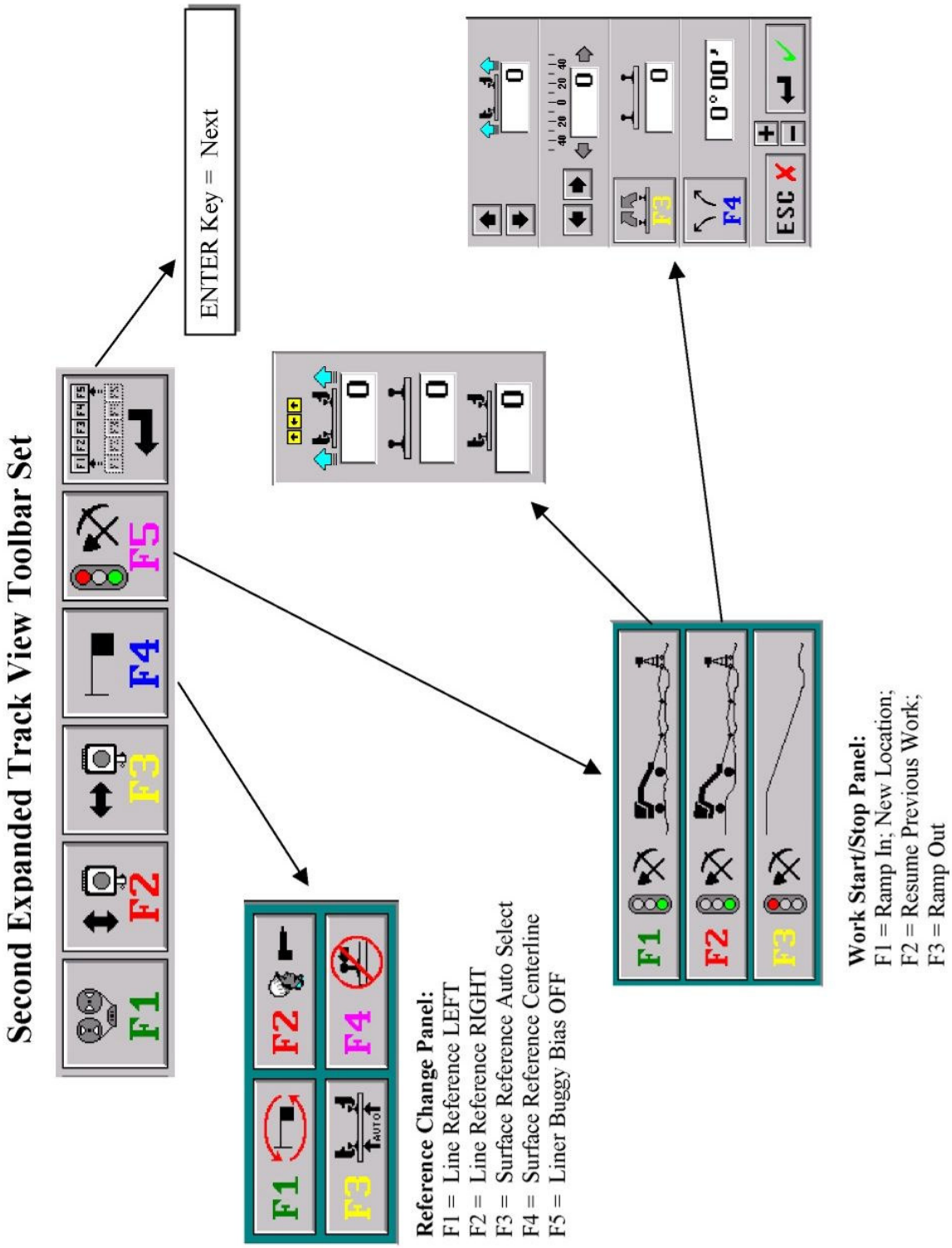
Second Expanded Track View Toolbar Set
F1
F2
F3
F4
F5
ENTER Key = Next
F1
F2
F3
F4
Reference Change Panel:
F1 = Line Reference LEFT
F2 = Line Reference RIGHT
F3 = Surface Reference Auto Select
F4 = Surface Reference Centerline
F5 = Liner Buggy Bias OFF
F1
F2
F3
Work Start/Stop Panel:
F1 = Ramp In; New Location;
F2 = Resume Previous Work;
F3 = Ramp Out
F3
F4
ESC

The Second Toolbar Set - *Expanded Track View*

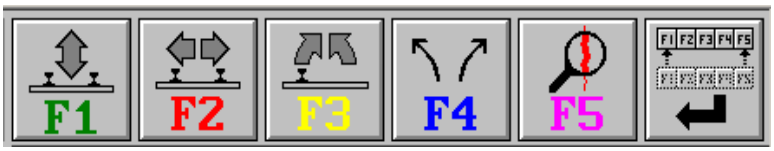

Track Recording Toolbar Set

This is the second toolbar button set for the Expanded Track View. Prior to recording track (using the F1 key), it may be necessary to turn on/off one or both of the projectors, to change the lining system reference or select one of the F5 Work-Start/Stop Panel Options. For this reason, F2, F3 and F4 are identical to buttons on the Work Screen first toolbar button set and have been duplicated here for convenience.

<u>F1 – Start /Stop Track Record Mode and Recording Toolbar Button Set</u>

Pressing the F1 button on the second toolbar button set pops out the ESC/ENTER panel.

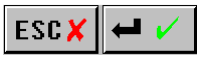

ENTER will place the machine in record mode. The recorder icon will appear and the reels of the icon will begin to rotate when the projector beam begins hunting successfully. The operator can make a recording in work and then return to the starting point in the travel mode. ESC will return to the toolbar set. While in record mode, the toolbar button set will change to the track recording toolbar button set. This second toolbar set will remain selected instead of returning to the primary toolbar set after a time-out. As the machine is moved forward, measured values for the track will be plotted. To end record mode, press F1, then the ENTER key. Pressing ESC will return to the record mode.

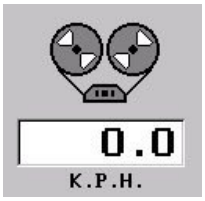

When recording is complete, a best fit will be automatically performed for all recorded data according to default values, *see page 3-86.* The graph change procedures described earlier (first expanded track view toolbar set) provide for ways of changing the fits or the results of fits. The remaining buttons on the record mode toolbar will now be described

NOTE: *When F1 Track Record is selected and started, all the previous data is cleared and the starting footage is set to zero. Therefore, a F2 Wipe is not needed before the start of a recording.*

When recording a curve, it is recommended that the starting location (tie) be marked. Marking a tie at the starting location has several benefits; (1) Curves can be recorded, then worked later. (2) With a marked tie the distance wheel encoder can be checked for proper operation. After recording a curve, the distance footage should always return to zero feet when traveling to the starting location (marked tie) in work mode. (3) Marking a starting location allows for multiple recordings.

F2 – Slow Record Speed

Pressing F2 during record will turn on or off the P2 pump to reduce recording speed. When speed is reduced, the button will appear depressed as shown to the right. A reduced recording speed is required for recording.

F3 – Start/Stop Fixed Point

Pressing the F3 button while recording will open a menu of track features as follows:

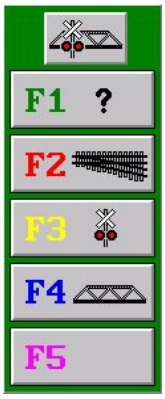

- F1 - Start a GENERAL PURPOSE fixed point
- F2 - Start a SWITCH or turnout
- F3 - Start a ROAD CROSSING
- F4 - Start a BRIDGE
- F5 - *Currently Unavailable*

Table Entries

F2, F3 and F4 - Feature Marking - Start Feature

When the shadowboard reaches a location to be marked as the start of a feature, use one of

these function buttons to mark the beginning of a track feature or fixed point, F2 for a switch, F3 for road crossings and F4 bridges. After a feature has been selected, the track feature menu will "pop off" and the Feature Marking toolbar button will remain depressed as shown.

To end the feature, press the F3 button. The Feature Marking toolbar button will return to the normal (un-depressed) state to confirm the feature being marked is terminated.

Track features marked in this way are initially assumed to be fixed (not to be lined, lifted or moved). If it is desired to mark a feature for reference purposes only, (for example, a ballast topped bridge) the manual entry table for track features can be used to unlock (or lock) track features to modify their "fixed" status.

F1- Feature Marking - Other Features

The FIRST key on the feature marking menu is for general purposes (generic) and can be used to mark any track feature and works the same way as the other buttons on this panel.

F4 – Change Liner Reference While Recording

The F4 record mode toolbar button changes the lining system reference to enable the recording of reverse curves. When F4 is pressed while recording, the reference rail panel will pop out, the lining system actuator will stop hunting and the lining projector will turn off. The lining reference can now be changed and the buggies will bias to the selected side.

The operator should move the projector and receiver to the opposite side, and then move the machine backwards and forwards by a few feet to ensure the buggies reference properly against the opposite rail. After pressing the ENTER key to accept the new reference, the operator should wait until hunting of the lining reference beam resumes on the new side.

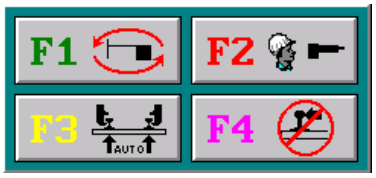

If the machine has the dual reference option, the operator only needs to move the machine backwards and forwards a few feet in order for the buggies to register properly on the new bias rail before pressing ENTER. As soon as hunting of the lining reference resumes on the new side, recording can re-start.

The bias will be released when F4 button is pressed. Bias will automatically be restored when this panel is closed, if the lining system is on. One purpose for F4 is to re-rail a derailed buggy when plotting.

F5 – Mark Location

Pressing the F5 key opens the Event Marker Panel shown at right.

To enter design lift and/or line throws information using automatic feature marking:

1. Enter the known correction value into the Value/Comment Field Box by using the Plus/Minus keys or keyboard.
2. Press the F2 key to save the new value. (Right Surface in this case) See note below.
3. Move the machine to the next stake (point).
4. Repeat steps 1 through 3 until all known values have been entered.

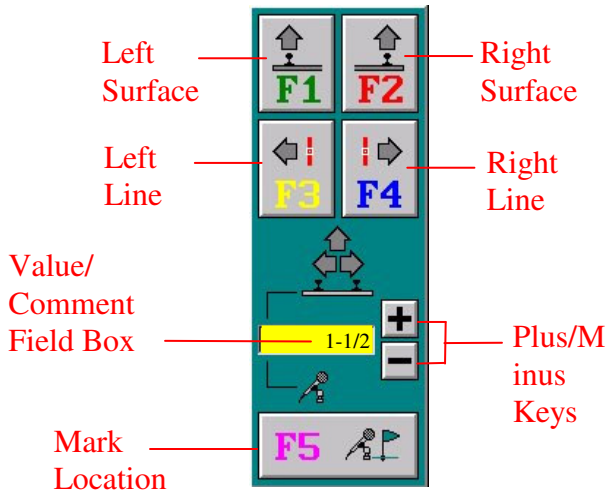

Event Marker Panel

NOTE: The F2 key saves the entered *right* surface value. If a different surface or liner reference is being used, press the appropriate key (F1, F3 or F4) to save the value. ***Do not press ENTER until all known values have been entered using the steps 1 through 4 (above). Pressing the ENTER key prematurely will cancel the automatic feature marking process.***

Mark Location and Value/Comment Field Box

The F5 key can be used for two purposes:

- To mark a location
- To allow the operator to enter a comment in the Value/Comment Field Box.

During recording, pressing the F5 key will mark the track graph with a cyan line (light blue) and the appropriate footage. When this key is used to mark tangent points or similar locations

indicating design geometry, the horizontal lines make excellent reference grids for rubber banding the best fit to align with the marked locations.

> **NOTE:** *If the value you entered prior to pressing the F1 or F2 is not a proper number, (example: using an "L" instead of the digit "1"), pressing F1 or F2 will result in a beep and your entry will be discarded.*

Entering design line information at each station ensures that each throw will be applied at the correct location. This is the preferred method of entering throws information. Although it is acceptable to enter the throws information after recording by means of the throws panel, it is **not recommend** due to the fact that entering data in such a manner increases the possibility of making mistakes such as leaving out stations etc.

NOTE: Design throws data entered by using the throws panel can be modified after the recording is complete by using the throws rubber band panel. *Note that the design throws entries are not cleared when refitting a curve.* Instead they remain in memory and are applied after the curve is fit to insure correct movements at each stake. The only method of permanently deleting recorded throws is to use the F4 key on the throws rubber band panel and erase every point before pressing ENTER.

F5 - Work Start/Stop/Resume Panel

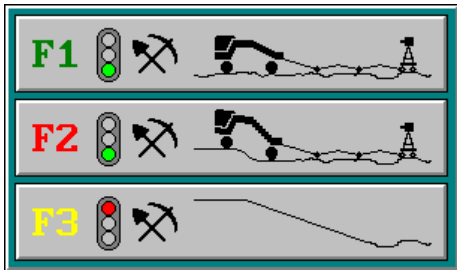

Pressing F5 on the third toolbar button set opens the Work Start/Stop/Resume panel. This button is duplicated on the third main toolbar set. This panel is used to: ramp-in at a new location (F1), resume work previously interrupted by a ramp-out (F2) and ramp-out and save values (F3).

F1 "Finding the Lights" or Ramp-in at new location.

F2 Resume Work; When F2 is pressed the resume work panel pops out.

F3 Run-out or Ramp-Out of Surface and/or Line.

NOTE: Before selecting this function, ensure that the machine buggies are properly setup, the proper number of buggies are selected, the proper lining reference is selected and desired projector(s) is on.

The keys on this panel are used as follows:

F1 "Finding the Lights": This procedure applies to unrecorded track.

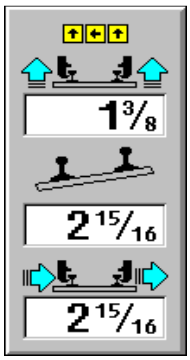

"Find the Light"

When starting at a new location (unrecorded track) use the F2 Wipe button (third toolbar set) to clear all previous track data and set the starting footage to zero. If superelevation or curvature is not zero for the track to be tamped, then use the manual change procedures to set the proper superelevation or curvature. The surface lift will automatically ramp to the lift default value. If the default value for lift is not the desired lift then use the surface lift change panel to enter the appropriate lift before using "finding the lights." (See NOTE on Setting Manual Lift). When F1 "finding the lights" (zero setup) is selected, the dialog information panel will appear showing lift, superelevation and line at the shadowboard. These numbers are determined from the current beam position and the inclinometer reading. If the values displayed on this panel are large, it may be desirable to move the machine slightly (if possible), but NOT more than five feet in either direction (zero feet), before pressing ENTER.

When the ENTER key is pressed, hunting of the beam will stop and the actuators will be positioned at the point of cutoff. Point of cutoff sets control points so that the first tie to be tamped will not be lifted, lined or changed in superelevation. Surfacing and lining will automatically ramp at preset rates to the desired values. For example, if no manual changes were made the superelevation would automatically ramp to zero and line would automatically ramp to the established liner zero and surface would automatically ramp to the default lift value.

If ESC is pressed, the procedure will be aborted and the actuators will be returned to their original positions.

NOTE: Setting Manual Lift The procedure for entering a manual lift is as follows: After an F2 wipe, open the surface lift change panel. Press either the up or down arrow key on the operator's R/H keypad only once. This will install a control point at zero feet and the desired lift will be zero. To increase the lift press the left arrow key or use the right arrow key to decrease the lift. Press the ENTER key after the appropriate surface lift is set. This accepts the changes and pops off the surface lift change panel.

Default Values for Surface Lift The surface lift default value is the upper lift value in the Defaults Table Panel (F5 on the third expanded view toolbar button set). If no lift is set, then this value is used to set the desired surface lift at the end of a ramp-in. In this instance the default lift is 1 inch and the ramp rate is 80 feet.

Using the "Finding the Light" procedure when surface and line is previously recorded.

When recording track with the surfacing system on and the machine has surface fit software, the recording will contain a plot of both surface rails. After the recording is complete, System V will automatically best fit the surface and line. The surface fit will normally have control points at each location of maximum and minimum lift.

The best fit automatically sets a starting lift, this lift is usually close to the "finding the lights" position. Using F1 "Finding the Light" is recommended before starting to tamp recorded track. When F1 "finding the lights" (zero setup) is selected, the dialog information panel will appear showing lift, superelevation and line at the shadowboard. When the ENTER key is pressed, hunting of the beams will stop, the actuators will be positioned at the point of cutoff and the yellow fit line is ramped to the appropriate best fit lift.

NOTE: With best fit of surface, the F1 "Finding the Light" can be used at any starting location of recorded track.

If ESC is pressed, the procedure will be aborted and the actuators will be returned to their original positions.

F2 "Resume Work". The Resume Work panel will open using the values that were stored by the F3 key of the work start/stop panel thereby giving the opportunity to inspect, retain or change the display values before they are applied. If values were not stored using the Work Start/Stop Panel this panel, the Resume Work Panel, allows you to re-enter this data manually before pressing ENTER to resume work.

NOTE: Any adjustment made to surface, throws (line shift) or line is an "A" point adjustment.

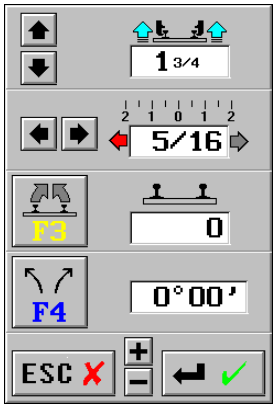

Resume Work Panel

Use the up/down cursor keys to change the lift (if necessary).

Use the left/right cursor keys to change the shift (if necessary).

The F3 and F4 keys can be used to select superelevation and curvature for modification prior to resuming work.

F3 Begin a run-out at this location. When this button is pushed, the current values of lift (and line shift) will be memorized for future reference. A surface ramp-out will be visible in the surface trace panel. The default rate of change for surface is used. If desired, use the surface rubber band panel to change the length of the ramp-out before continuing. Manual changes to both lift and line can, of course, continue to be made while the ramp-out is in progress.

Using the F2 - Wipe Button (third toolbar), or F1- Record Button (second toolbar) will not cause the memorized values at the start of a run-out to be lost.

An example is where tangent track is being tamped as the machine approaches an unrecorded curve which also needs to be tamped and lined. The procedure would be as follows:

- At a suitable point to begin recording the curve, stop tamping and press the F3 button on the above panel. It doesn't matter that no run-out is to be performed, the F3 key is just being used to save the current value of lift and shift.
- Record the curve in the usual way.
- Return to zero feet and press the F2 button on the Work Start/Stop/Resume Panel. This will restore the lift that was in use before recording the curve.
- Resume tamping.

NOTE: If you forget to use the F3 button to perform a run-out (done manually instead), the values in the F2 resume panel will be the values of the last run-out. The F2 values can be modified and when modifying, they are modified as an “A” point value. Also, F1 (find the lights) can be used a few feet prior to the start of the run-out to ramp the surface back to the original value.

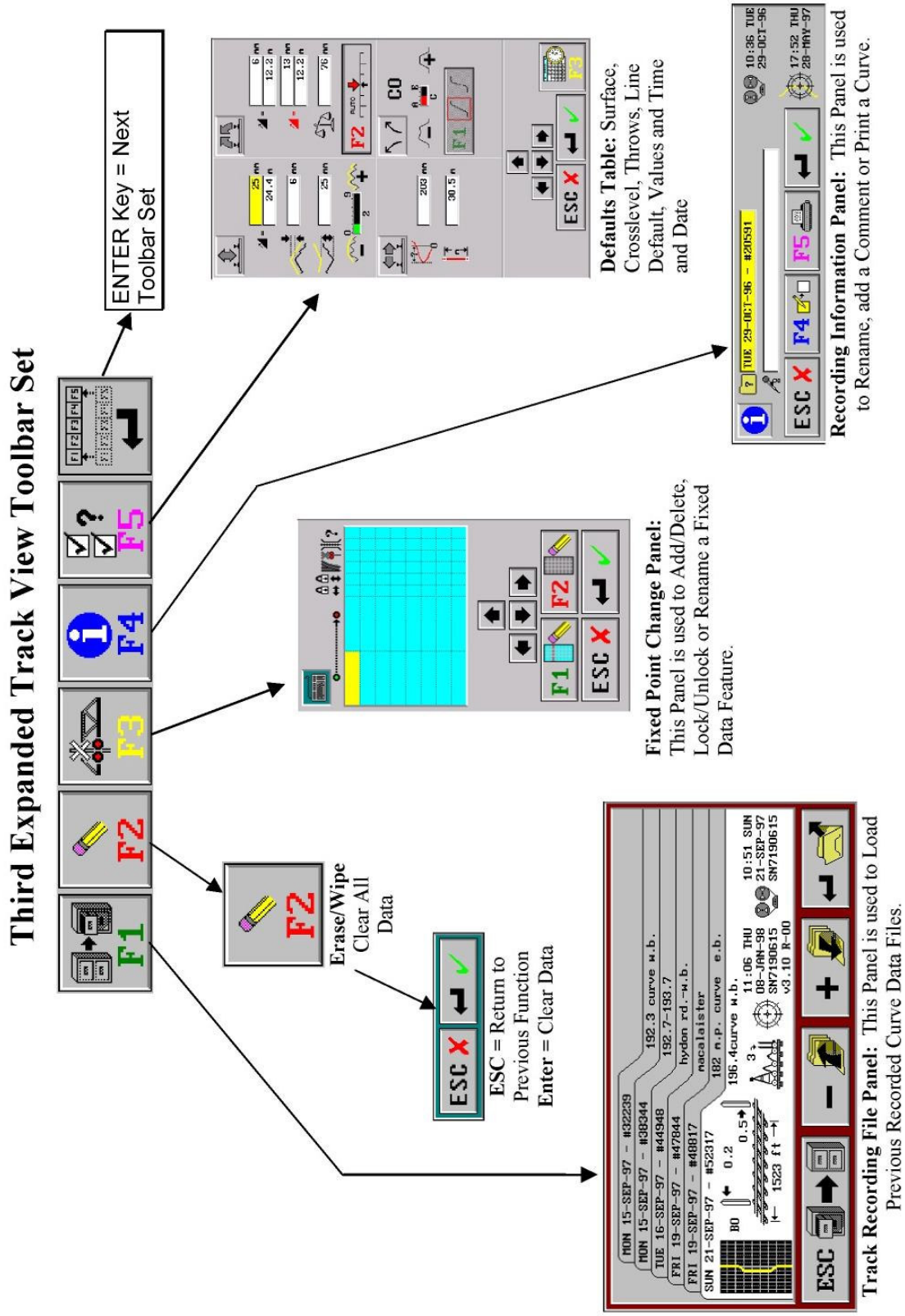
Third Expanded Track View Toolbar Set
F1
F2
F3
F4
F5
ENTER Key = Next Toolbar Set
Defaults Table: Surface, Crosslevel, Throws, Line Default, Values and Time and Date
Recording Information Panel: This Panel is used to Rename, add a Comment or Print a Curve.
Fixed Point Change Panel: This Panel is used to Add/Delete, Lock/Unlock or Rename a Fixed Data Feature.
Erase/Wipe Clear All Data
ESC = Return to Previous Function
Enter = Clear Data
Track Recording File Panel: This Panel is used to Load Previous Recorded Curve Data Files.

The Third Toolbar Set - *Expanded Track View*

The third (and last) toolbar button set for the Expanded Track View provides ways of controlling and accessing information stored in the machines memory.

F1 - Track Recording File Panel

Pressing F1 on the third toolbar button set will open the Track Recording File Panel (file cabinet). This panel will open showing folders containing information about each track recording in memory. The most recent recording is at the front. If this is the one you want, simply press the ENTER key to recall this information into the Expanded Track View. Frequently the time and date the recording was made (or last changed) will be enough to identify the desired recording. Names, comments, location (mile post), length of recording or the "thumbnail" sketch of the recording curvature further assist in identifying previously stored information. Other details of the curve file can be seen, just to the top right of the thumbnail is the fit style and sensitivity used to fit this curve (B0 in this example above), number of buggies used and the version and release of the software that generated the fit. Use the plus/minus keys until the desired recording is on the front folder and press the ENTER key. Pressing the ESC key will close this panel *without* recalling information from memory.

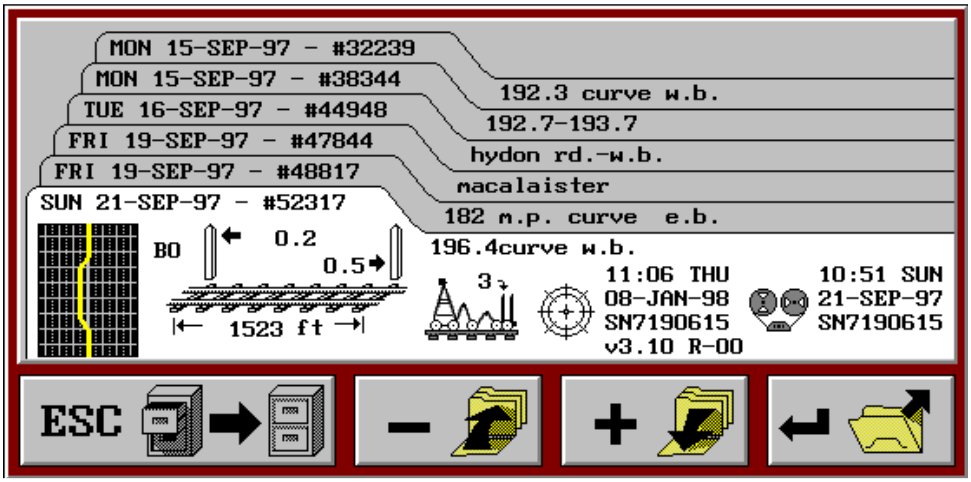

F2 - Erase/Wipe Track Button

Pressing F2 on the third toolbar button set will pop out the ESC/ENTER key. ENTER will clear the recording that can be seen in the Expanded Track View. The yellow fit lines and red throws line will default to straight lines on zero. Clearing the Expanded track view in this way may be needed when preparing to tamp track that has not been recorded. It is not necessary to do this prior to starting a new recording. ESC will back out of the F2 function and return to the previous function.

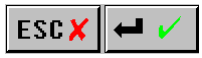

Note that when a recording is cleared in this way it is *not* deleted from the machines memory. It will still be possible to "reload" the cleared recording at a later time if desired.

F3 - Feature Marking - Table Entries

Pressing the F3 button in the third toolbar button set will open the following manual entry table for track features or fixed points.

The first two columns on this table are the locations for the start and end of each feature. The remaining columns indicate the locked/unlocked status and type of each feature. Using the plus (+) key locks a fixed feature and using the minus (-) key, unlocks a feature. When a feature is locked, it is assumed that the track cannot or should not be moved. When a feature is unlocked, it is shown for reference purposes only and will have no impact on the operation of the machine through the feature (ballast decked bridges for example).

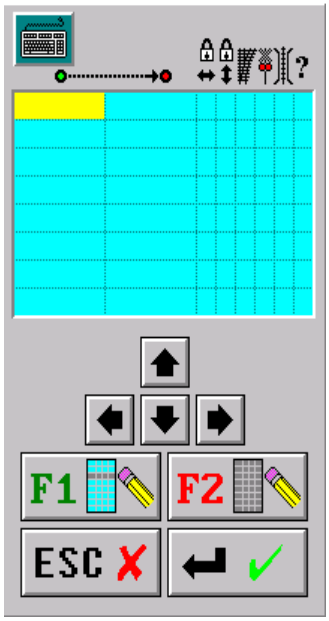

When this table panel opens, it will already contain all pre-existing track features (if any). On this screen, using the arrow keys on the right keypad (or computer keyboard) moves cell selection in the direction of the arrow. The number (if any) in the selected cell can then be changed or re-entered using either the computer keyboard or the plus/minus (+/-) keys on the right keypad. Page-up or page-down (or the corporal keys on the keypad) will jump through the available data a page at a time.

If you wish to add one or more fixed points, simply use the arrow keys until a blank row has been selected, then enter the start and stop for each new fixed point. Fixed points can be entered in any sequence, regardless of whether they are before or after fixed points already entered.

All points will be sorted in order of location before the fit is again displayed.

Pressing ENTER closes the panel and accepts all entries. Pressing ESC closes the table panel and discards any changes made using the panel. Changes made using the table can be viewed in the graphs.

Pressing the F1 button will delete the currently selected fixed point (with the yellow cell).
Pressing the F2 button will delete all fixed points.

WARNING: Any change on this panel will result in a new best fit of all graphs that would discard any manual changes made through rubber banding.

F4 - Recording Information Panel

Pressing the F4 button in the third toolbar button set will open the Recording Information Panel. This panel is used to rename, add a comment or print the current curve data file.

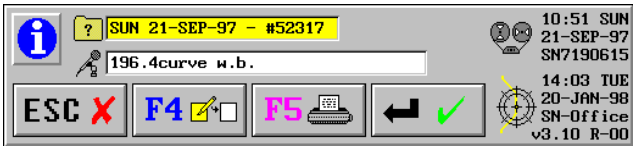

The upper line can be used to rename the recording. The lower line can be used to enter a comment or any other relevant information. Information entered on this panel makes it easier to identify recordings in the machines memory. Although this feature is entirely optional, it is highly recommended that it be put to good use. At the top right side of the panel is the date and time the recording was first made. At the bottom right side of the panel is the date, time of any subsequent changes, software version and release number used to generate the fit. This panel can be used at any time that a recording is loaded.

Press F4 to move the highlight to the next box. Press the F5 button to print the recorded file loaded. Press ENTER to accept changes or Press ESC to discard changes.

F5 - Defaults Table Panel

Pressing the F5 button in the third toolbar button set will open the following panel of system defaults.

This panel displays a number of values and settings which are used as initial values when a new recording of track is created. Subsequent changes to the values for the recording or curve are kept with the recording and do not effect the values on this panel.

* Any changes to these fields or items will be applied to the current recording upon pressing ENTER. Changes to all other fields will not take effect until the start of the next recording.

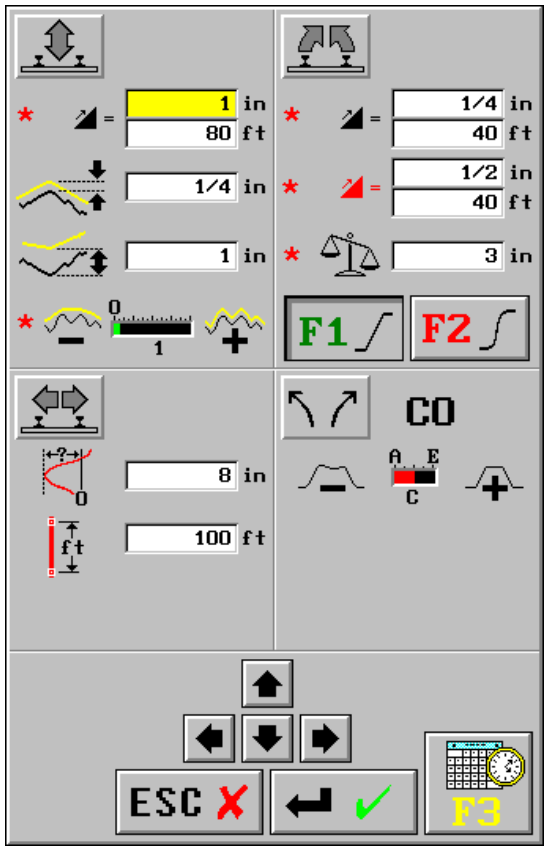

The panel is divided into four parts, namely surface, superelevation, throws and line. Use the arrow keys on the right keypad (or computer keyboard) to highlight the value to be changed (this is shown by changing the display with the value to a yellow color or by surrounding it with a red rectangle).

Pressing ENTER closes the panel and accepts all entries. Pressing ESC closes the panel and discards any changes made using the panel.

Lift Default Values

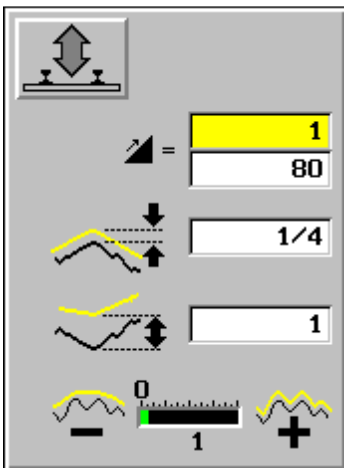

Lift Default Values

The upper number on this panel is the default lift. After “finding the lights”, if a surface lift was not set in the lift panel, (expanded view) a surface ramp up to the default lift value will automatically be constructed. For machines with surface fitting, this default lift value is used as the terminating lift at the end of a recording in case surfacing is to continue beyond the end of recording. The upper two numbers on this panel give the default work-in/work-out rate for surface in terms of inches over a length in feet (one inch per 80 feet in the example). Changing either or both of these numbers will change this default rate.

The remaining three items on this panel are the minimum lift, maximum lift and fit sensitivity to be used when making an optional surface fit to recorded values for surface. Increasing surface fit sensitivity causes the yellow fit line to tend to follow actual rail surface profile and decrease the amount of ballast needed. Decreasing surface sensitivity tends to fill the "valleys" between high points and increase the amount of ballast needed.

Superelevation/Crosslevel Default Values

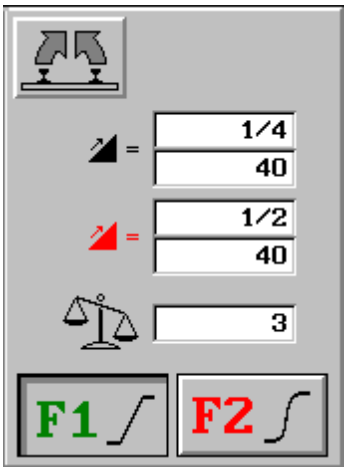

Superelevation Default Values

The upper two numbers on this panel give the default ramp rate for superelevation to be used for start of work and ramping into and out of fixed points. The second pair of numbers (adjacent to the red symbol) give the maximum permissible rate of change for superelevation. Superelevation ramps that exceed this value will be brought to the operators attention by displaying the offending ramp rate on the superelevation rubber band panel in red.

The last value is the unbalance value (in inches of superelevation) which is used in combination with train speed to compute superelevation in curves. There are different formulas available to compute this relationship and the formula to be used must be specified by the railroad when a machine is ordered.

F1 and F2 keys indicate the type of spiral. F1 is for 3rd order or cubic spirals (which is standard and used on most low speed track). F2 is an option available for 5th order spirals (known as “S” curves) sometimes used on high-speed track. This selection sets the default value for next curve to be recorded. To change the current curve, set as desired and re-fit curve. Default and standard is F1.

Throws Default Values

The upper number on this panel gives the default maximum throw that will result from applying a best fit. The lower number is the default distance between throws (monuments).

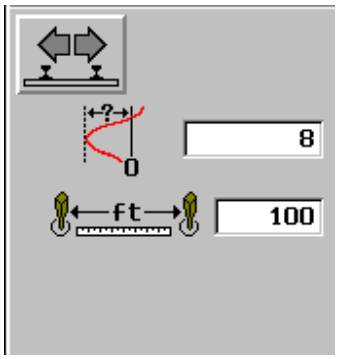

Throws Default Values

Line Default Values

This last panel provides a way of setting the default best fit style/method for a new recording.

- A = Average Fit,
- B = Smoothed Body (No Projector Correction)
- C = Smoothed Body (Corrects for Projector)
- D = Constant Body (No Projector Correction)
- E = Constant Body (Corrects for Projector)

The slider controls the best fit style or method. When the slider is selected, it will be surrounded by a red rectangle. Use the plus/minus (+/-) keys to change the values.

NOTE: The default best-fit sensitivity is always zero and can no longer be set from this panel. Changes to the best fit style default only apply to the next recorded curve. Smoothed Body C is the Factory Default.

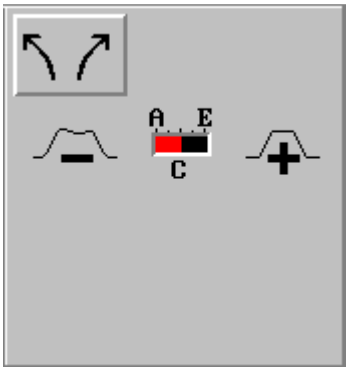

Line Default Values

Time and Date

Pressing the F3 button on the Default Panel opens the Time and Date Panel. The hour field of the systems clock will be initially highlighted. Pressing the plus or minus key will change the hour by one digit for each press. If there are any other changes to be made, press F1 until the item you wish to modify is colored yellow. Use the plus or minus key to change the item. Continue until all items on this panel are correct. Pressing ENTER closes the panel and accepts all entries. Pressing ESC closes this panel and discards any changes made.

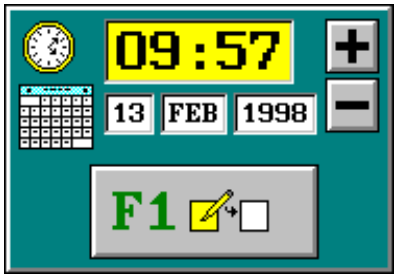

HELP INFORMATION

One of the most important keys on this keypad is the help key, which is in the right column of keys, second from the top (with the international "**i**" symbol for information). Regardless of the panel, menu or dialog box that is open at the time, pressing this key will give you help information relevant to the situation.

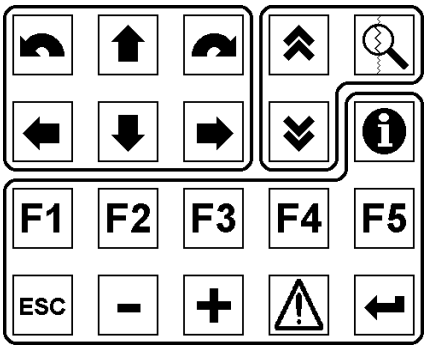

Many of the keys on the right keypad appear similar to keys on the PC keyboard (F1 through F5, ESC, ENTER and so on). A feature of System V is that almost all of the keys on the right keypad have a counterpart on the PC keyboard and either may be used for convenience.

EXAMPLE:
From the work screen, pressing F1 pops out the Distance menu.

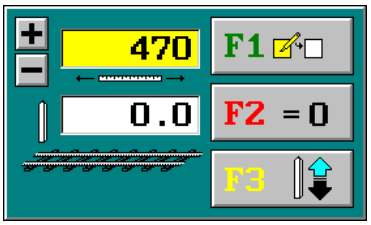

Pressing the Help key, pops out the Help screen. Note there are two pages to this help screen. Use the corporal keys to page up or down.

Help screen F1 places the help system in push button/joystick help mode. While in this mode, using any push button or joystick will result in the relevant help information being displayed. Any key or joystick on either panel can be used in this mode without initiating the associated function (outputs disabled) until the mode is terminated by holding down the ESC key for more than one second.

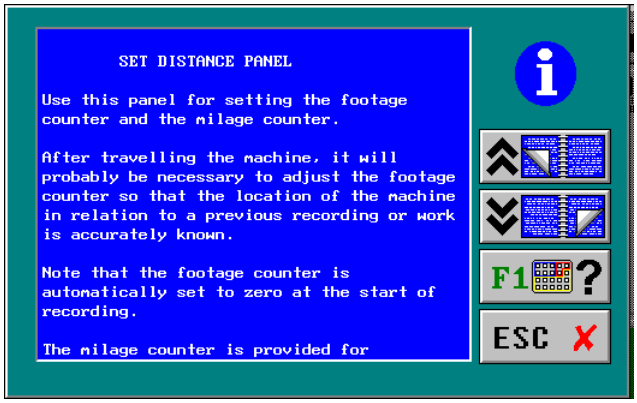

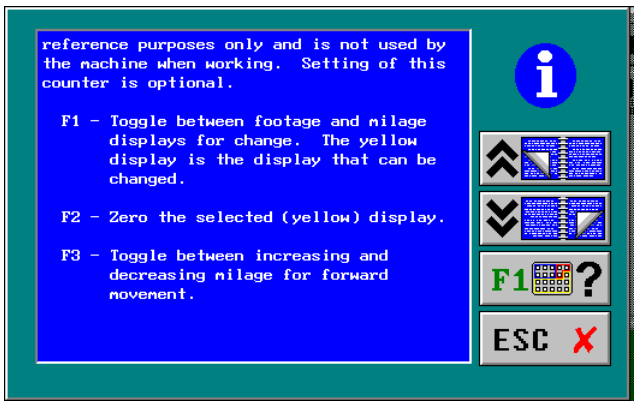

Production Reporting (OPTION)

The Production Reporting option for the Mk IV provides comprehensive and detailed reports on the work completed by the machine. To test whether your machine is equipped with this option, press the spacebar on the PC keyboard. If there is no response, your machine does not have this option.

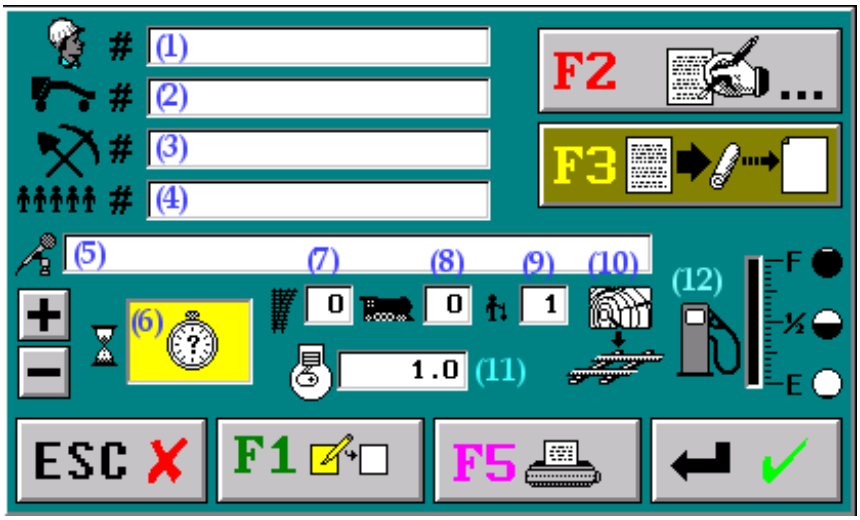

The production report view has twelve different fields (elements), these fields are listed below. The F2, F3, ESC, F1, F5, ENTER and Plus/Minus Keys are explained in the following text.

1. Operator I D Number or Name, etc.. Up to 20 characters may be typed into this field.
2. Machine I D or Serial Number or Name, etc.. Up to 20 characters may be typed into this field.
3. Work Order Number or Name, etc.. Up to 20 characters may be typed into this field.
4. Gang I D Number or Name, etc.. Up to 20 characters may be typed into this field.
5. Comment. Up to 35 characters may be typed into this field.
6. Present type of Delay, Work or Travel Mode.
7. Number of Switch(s) Worked (0-99).
8. Number of Train(s) causing a delay (0-99). See note.
9. Manpower or Personnel in gang (0-99). See note.
10. Tie type: Wood, Concrete or Steel.
11. Engine Hours. Set at the start and end of a production period (day).
12. Fuel Level. Set at the start and end of a production period (day).

NOTE: After working a switch or clearing a train, change the appropriate field number to 1, then press ENTER. After working a second switch or clearing a train second, change the field number to 2, then press ENTER, etc. or when ending a report enter the total number of switches worked or trains causing a delay.

The Manual Entry Screen

A machine equipped with production reporting is continuously recording all relevant information automatically at all times. In addition, the operator can manually enter information by pressing the spacebar on the PC keyboard, which opens the production report screen.

It is important to note that this screen can be opened at any time during the course of the day's production to manually enter information such as a comment, a change in the type of tie being tamped, to note a fuel level, and so on. When the ENTER key is pressed, any change to any of the information on this screen will be entered into the data. When the ESC key is pressed, No changes are saved. In general, the information on this screen should be used to indicate the CURRENT status of the machine. Ideally, changes should be entered as they happen.

Use the F1 button to shift the highlight field to each entry that is to be changed. For text entries (such as operator ID, comment), use the keyboard to type out the appropriate information. For all other entries, use the plus (+) and minus (-) keys to change them (production mode, tie type etc.).

The F2 key opens another panel so that additional entries can be made if a custom report package is installed on the machine.

Reports are normally based on calendar days. If it is desirable to split a day's production into separate reports (for example, if the machine is moved from one location to another), use the F3 key to indicate a new report is being started and the entries currently on the screen are to be used to start the new report. The new report is not actually started unless the F3 button on the screen is pressed in when the enter key is pressed. The F3 button on the screen will stay pressed until the F3 key is pressed again, allowing the operator to change his mind about starting another report.

A new report is automatically started whenever the computer has been turned off for longer than 8 hours or the computer has been running non-stop for more than 24 hours since the report was started.

Selecting and Making Reports

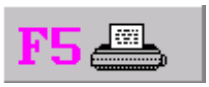

Pressing F5 on the Production Reporting Manual Entry panel will cause the following view to open: The time each new report was started is displayed in this view.
A snapshot of the current report is the first report that may be printed. A previous report can be selected by pressing the plus or minus key. The F5 key will commence printing the selected report and pops this view off the screen. Pressing the F5 key whenever it is already pressed in aborts any printing in progress.

Production and Delay Modes

The production, travel, train-travel and "unknown delay" modes shown below (from left to right) are automatically selected by the computer. Production mode is set whenever the machine is cycling. The mode is automatically changed to "unknown delay" whenever cycling has ceased

for more than a ten second grace period, unless tamping in switch mode, where a 90-second grace period is allowed.

The mode is changed to travel whenever the work mode switch is in the travel position, and it is changed to "unknown delay" when the work mode switch is in the work position. If the "train" mode (see modes below) is selected prior to switching the work mode switch to travel, however, then train-travel is chosen. When the work mode is switched back to the work position, train-travel mode is changed back to train mode. Train-travel mode can be used to log the time spent traveling to and from a siding to clear trains.

The modes shown below, from left to right, are setup, train, other maintenance-of-way, service, weather, training and general repairs delay modes. The operator can select any one of these modes to indicate the reasons for production delays.

Only the operator can change the mode into and out of training mode. The actual machine production, however, will continue to be accurately reported in the printed report regardless of training mode status. This feature allows the operator to attribute a slow production day to training time.

Additional repair modes are provided to further qualify time spent repairing the machine. These modes are drive-train assembly repair, hydraulic system repair, engine repair, operator console repair, electrical system repair, pneumatic system repair, and cab & frame assembly repair, shown from left to right below.

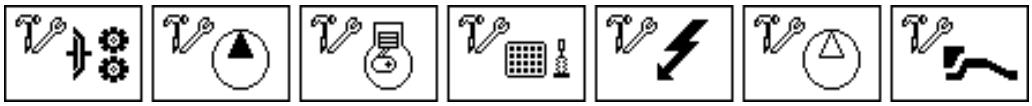

If a black-colored version of any of these icons is selected, this indicates that repairs are being performed on the machine, but the time spent repairing the machine is not impacting the railroad's ability to do work, such as the case when there is no available track time for working. If a red icon is chosen, however, the machine is considered down, where the time spent repairing the machine is keeping the machine from performing its regular work during available track time.

Tie Finder AutoMag Option

The **TIE FINDER** (option) provides an advanced method of locating ties through the use of dual magnetic sensors mounted at the front of the machine. Two (2) sensors (antennas) are mounted inline on simple brackets on the left and right sides of the machine. This design allows the sensors hold their position relative to the rails for accurate tie finding.

Unlike earlier Tie Finder models, this version requires little to no adjustments except when replacing a sensor box or antenna.

With **TIE FINDING** activated and the machine moving forward in WORK mode, the sensor will continuously search for existing tie plates.

The **AUTO TAMP** process provides fully automated indexing between ties (as determined by tie finding) and automates the start of each tamping cycle. The result is a consistently faster cycle time, a reduction in operator fatigue and more time for the operator to focus on surfacing results.

Tie Finder Toolbar Navigation

From the Jupiter Main Work Screen, press **F3** on the first main toolbar set and the **Auto Tamp Setup Panel** will appear.

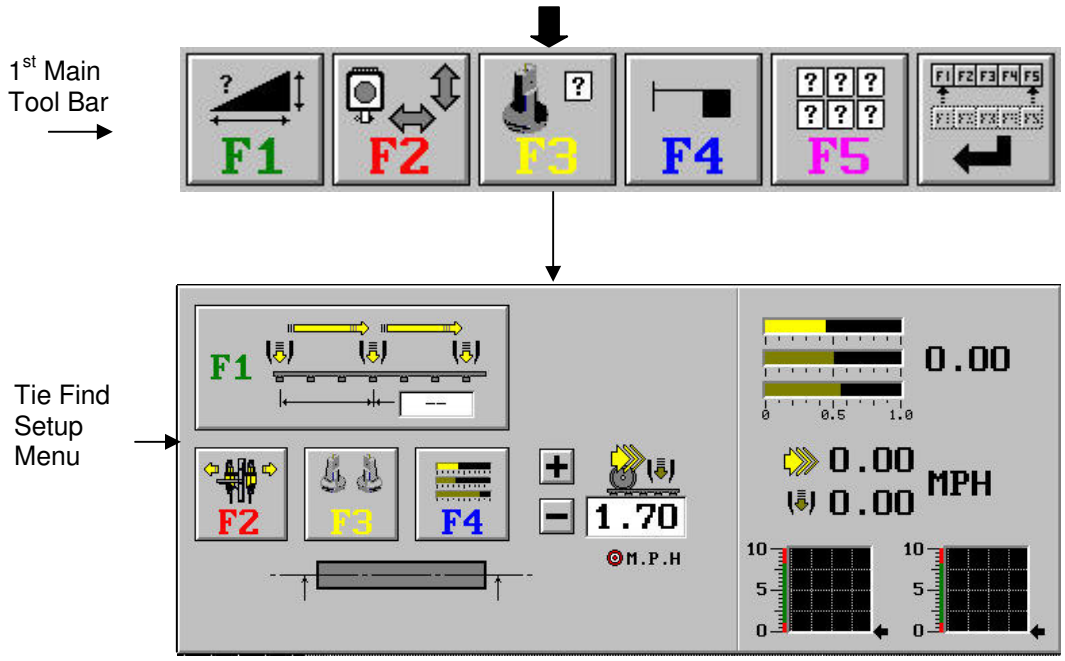

Tie Find Setup Menu
Figure TF-2

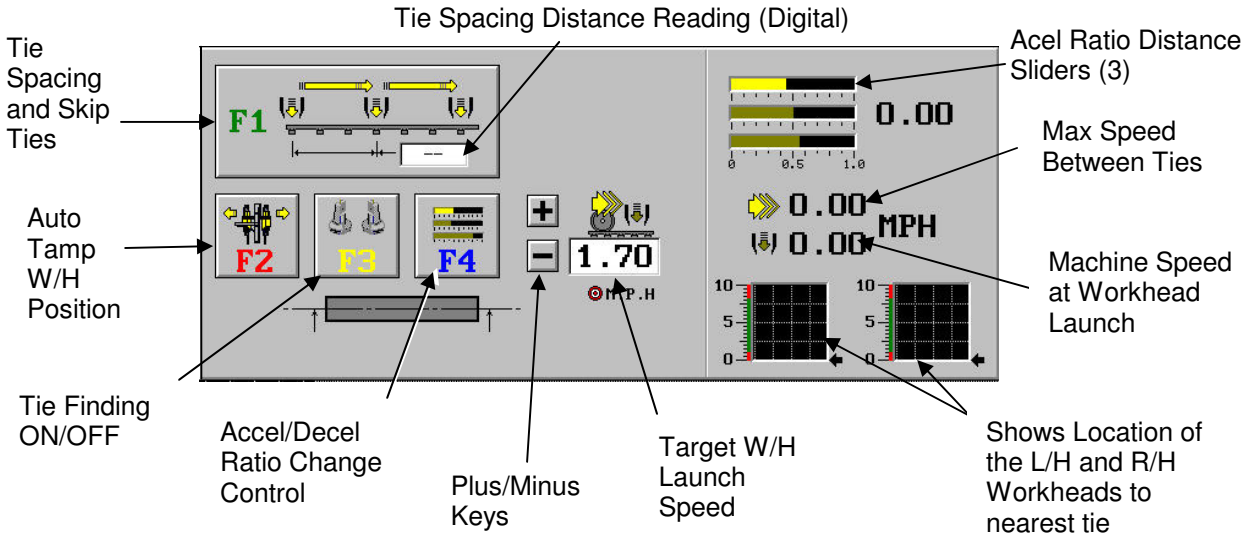

Tie Find Setup Menu Controls
Figure TF-3

The **TieFind Setup Menu** provides access to setup, diagnostic and calibration options related to tamping with the TieFinder. See the following controls

F1 Use this button to toggle between "every tie" tamping, and "skip tie" tamping options. Also displayed is the distance to the next tie to be tamped from the current machine location when tiefinding is ON. A shortcut is provided by of holding down the "+" or " – " keys on the right hand keypad and pressing the tie finder button (lower left key) on the left keypad to cycle between choices. Refer to Figure TF-4.

F2 Opens the **Workhead/TieFinding Panel** to adjust or enter parameters important to automatic tamping operation. Refer to Figure TF-5.

.

F3 Toggle **AutoMag TieFinding** ON or OFF.

NOTE

The machine must be in WORK mode to turn ON Tie Finding and will turn OFF automatically when Travel Mode is selected. The probe icons on the F3 key will darken when ON and change to gray when OFF.

A short cut button is located on the left hand keypad. The short cut button turns on tiefinding

F4 Opens the **Traction Duration Adjust Panel** to enable manual variation of the accel/decel ratio (see below for more information).

+ Increase the "target launch" speed by 0.1 mph.

- Decrease the "target launch" speed by 0.1 mph.

The plus and minus buttons are used to adjust the target Workhead Launch speed when in auto mode. This speed is used to adjust the amount of decal time in proportion to the forward accel from tie to tie.

Three sliders on the right side of this panel indicate the ratio (of distance) for accel over the total index distance.

The 2 numbers in large font on the right of this panel are shown in miles per hour (MPH)

- The max speed achieved between ties
- The machine's speed at workhead launch

The graphic at the lower center of this panel shows the location of the workheads to the nearest tie.(assuming tie finding is turned on).

Two charts at the bottom right of this panel display the signal values from the left and right AutoMag probes over the past hour. The value should ideally be in the 4 to 6 volt range when the buggy is on the track however any value between 1 and 9 volts is acceptable.

Target Workhead Launch Speed Adjust

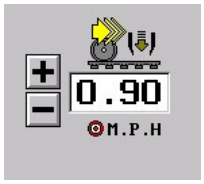

The **Target Workhead Launch Speed Adjust** keys are part of the "Auto Tamp Setup Panel" shown in Figure TF-3 and TF-4. The (+/-) plus/minus keys are used to adjust the auto-tamping target workhead launch speed. This is the average speed at which the machine will be moving when the workheads are launched toward the tie. A comfortable speed range is 0.9 to 1.2 MPH for "every tie" tamping. Higher speeds are often acceptable for "skip tie" tamping.
A speed that is both comfortable and productive will vary based the grade of the track. Therefore the operator may choose to adjust the speed higher when working up a grade and adjust it lower when working down a grade.

See "Joystick Functions" for a shortcut method of adjusting the working speed.

Press the ESC or the ENTER button to close the panel.

F1 -TieFind Setup

From the **Auto Tamp Setup** panel (Figure TF-3 and TF-4), press **F1** to select the number of ties to be skipped during tamping. The distance (measured in inches) between the current workhead center position and the next tie to be tamped is shown in the white box. and on the 3 horizontal sliders on the right side of the panel.

NOTE The default setting is "Tamp Every Tie".

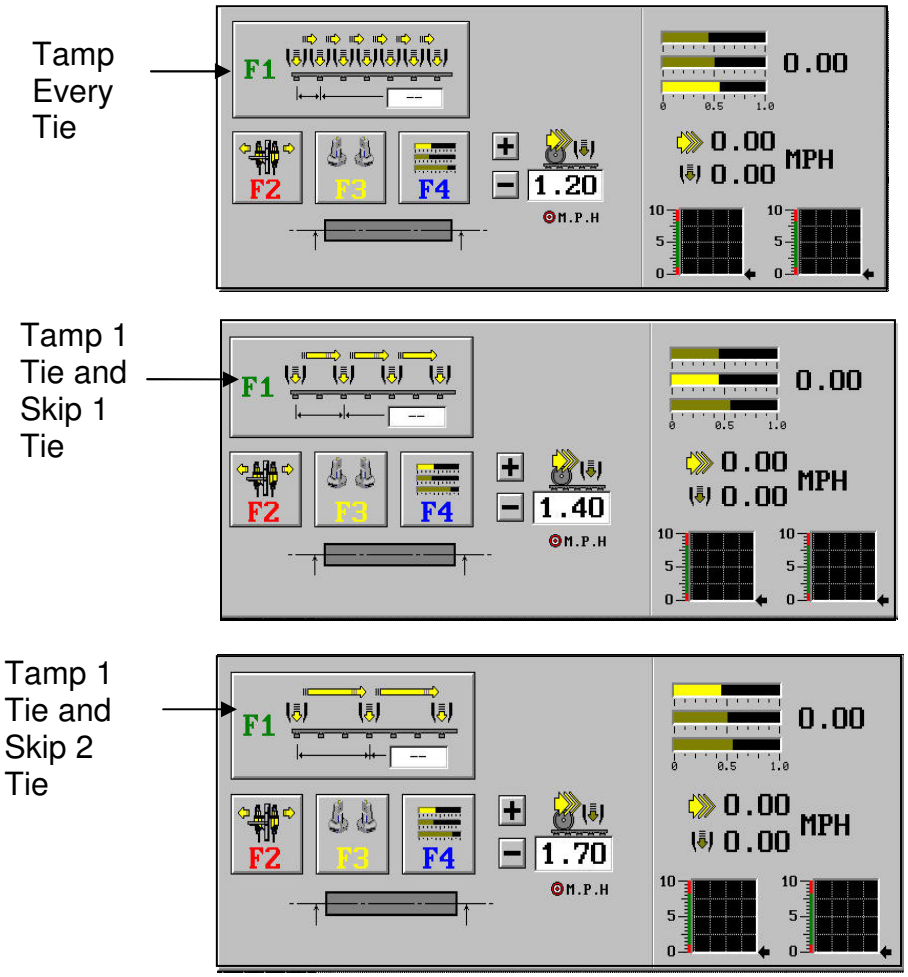

F1 Selections Figure TF-4

F2 Automag Tamp Workhead/Tie Setup

Press the **F2** key to open the **Automag Tamp Workhead Setup** panel. Use this panel to access parameters that effect automatic tamping using the Automag probes. See Figure TF-5.

Press **F1** to open the **Traction Bump Calibration Panel**. This panel provides adjustment of values controlling the momentary engagement of forward traction during indexing should the speed of the machine slow more than desired.

The upper box displays the ON duration of a traction bump in milliseconds. The lower box displays the OFF duration required before another potential traction bump would be allowed, also in milliseconds.

Press the **F2** button to select Tie type, Wood or Concrete.

Wood Concrete

Press the **F2** button to shift between the two options.
(The default setting is Wood Ties)

NOTE More clearance is given to concrete ties.

F3 Highlights (select) 1 of 3 info boxes. 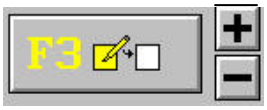

\+ Increase value in the selected info box.

\- Decrease the value in the selected info box.

Pressing F3 will cycle entry selection between the available numerical entry boxes on this panel:

TOOL SEPARATION - Set this value to the separation in inches between the paddles of the tamping head (assumes left and right workheads have similar separations).

SQUEEZE-IN RATE - The rate of squeeze-in for the tamping tools in inches per second.

The workhead squeeze-in rate is used to compute a "pre-squeeze" in the case where the tie spacing is too tight to tamp without first pre-squeezing the heads. When tight tie spacing is encountered, if the pre-squeeze is:

too little - decrease the squeeze-in rate

too much - increase the squeeze-in rate

TIME OF FLIGHT The time taken in milliseconds for the workhead tools to reach the top of a tie during cycle (see below).

The number to the lower right of this panel is the "time of flight" in milliseconds. This is the time taken from workhead launch until the workhead is below top of tie. When approaching a tie to be tamped, the forward speed of the machine in combination with this number is used to launch the workhead early.

If when tamping fast, the tool tips appear to clear ties more generously than they do for slower launch speeds, the "time of flight" should be increased. This number may need adjustment at initial set-up, but otherwise shouldn't need frequent modification.

Workhead to Probe Distance Adjustment

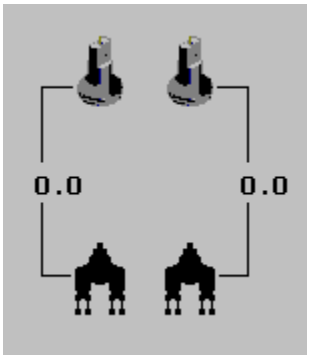

On the left hand side of the panel is a graphic showing the adjustment to the left-hand and right-hand probe to workhead distances (in inches). The software contains a default value based on the machine layout. When no adjustments to this default have been made, the displayed value will be 0.0. Some minor adjustments could be required during initial set-up due to small variations in probe location on the machine. Additionally, making small adjustments forwards and backwards to correct for consistent errors in tie-centering could be necessary.

If the workhead is not well centered over the target tie, pushing the workhead joysticks forward or reverse while this panel is displayed will adjust the heads 0.2 inches for each motion of the joystick. This mechanism is separated between left and right hand sides; the left joystick controls the left-hand adjustment and the right joystick the right-hand adjustment. If the workhead is consistently short of the tie center, pushing a joystick forward will adjust the respective side 0.2 inches closer to the center. This will result in the displayed value increasing by 0.2 inches. Conversely, if the workheads are generally too far past the tie center, pulling the joystick back will adjust the respective side back 0.2 inches and the value displayed will decrease by 0.2 inches (potentially displayed as a negative number as all adjustments are reflected as a difference against the machine's default value).

See "Joystick Functions" for a shortcut method of adjusting the workhead centering while working.

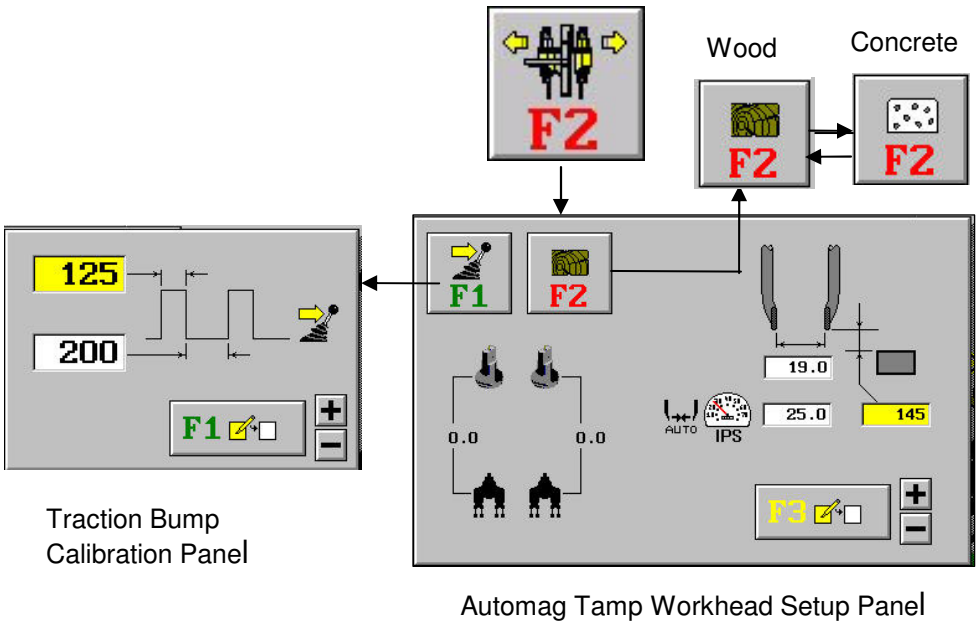

F2 Selections Automag Tamp Workhead Setup
Figure TF-5

F3 – AutoMagTie Finding ON/OFF

Press the F3 button to turn the Automag tie finding option ON/OFF. The **Automag Probe Setup Panel** will display after F3 is pressed to confirm the request to turn ON or OFF the Automag tie sensing and provide a method of disabling one or the other Automag probes.

In the ON position, the bias cylinder on the sensor carriage will become energized and the bias rollers will extend to contact the inside of the rails and stabilize the cart.

NOTE Tie finding can only be turned ON in WORK MODE. When tie finding is OFF, the icon (light) will appear gray.

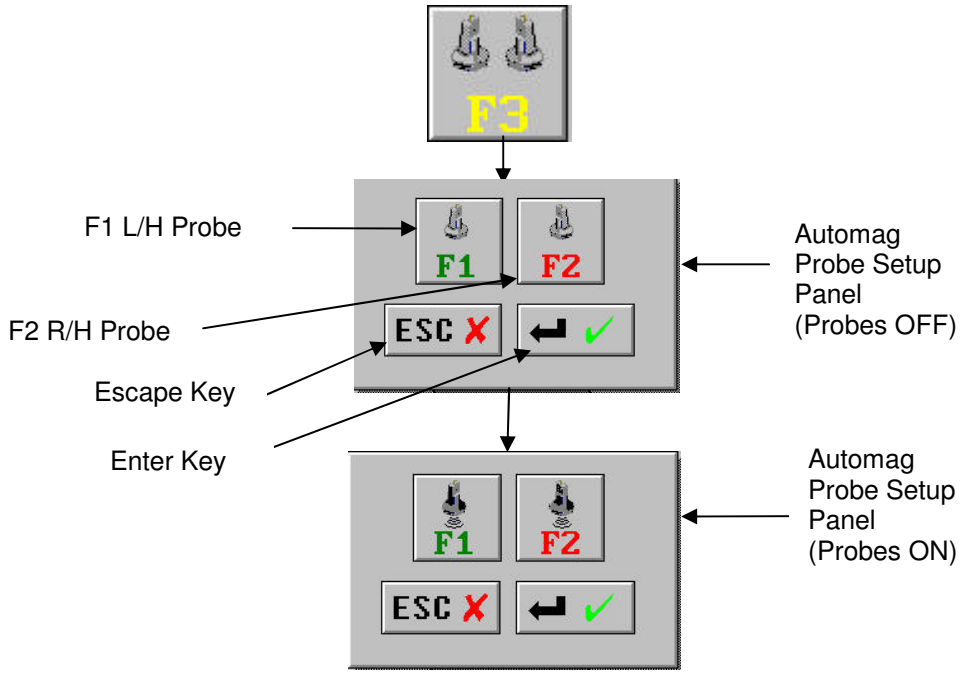

F3 AutoMag Probe Setup Panel Controls

Figure TF-6

Press the F1 button to turn ON or OFF the left hand probe. Press the F2 button to turn ON or OFF the right hand probe.

Press the ESC button to maintain the Automag state when you entered this panel. Press the ENTER button to change to the shown Automag state.

F4 – Traction Duration Adjust

Press F4 to open the **Traction Duration Adjust Panel** The traction control used in Tiefind tamping is based on the distance to the projected launch location. Traction will be held for a percentage of this distance and will then update percentage based upon the actual speed at launch being higher or lower than what was attempted. See Figure TF-7.

The top slider is used for 3rd tie tamping patterns; the middle slider is used for every other tie tamping patterns and the bottom slider is used for every tie tamping patterns.

NOTE The current selected pattern will be displayed by the yellow highlighted slider.

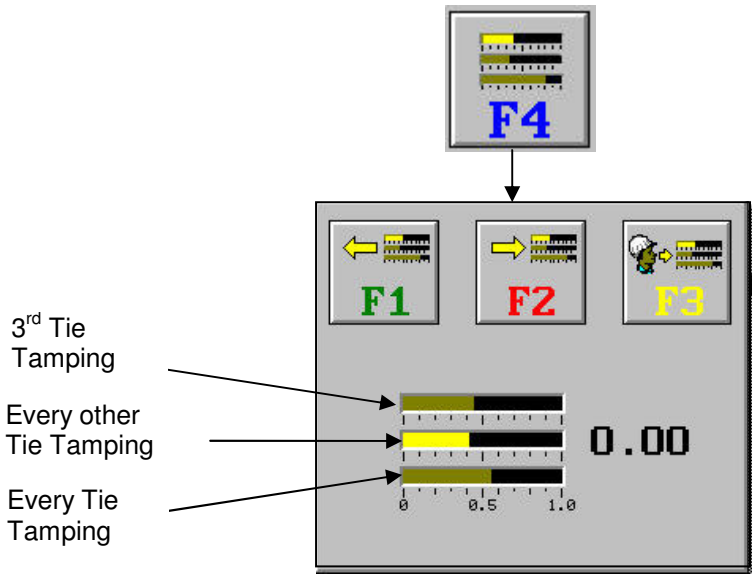

F4 Selections **Traction Duration Adjust Panel**

Figure TF-7

Pressing the **F1** button will shift down the selected pattern's traction ratio by one percent

Pressing the **F2** button will shift up the select pattern's traction ratio by one percent.

Pressing the **F3** button to turn ON or OFF the Watch Operator function .When ON, the computer will attempt to update the traction ratio for the selected pattern based on operator performance.

Using Auto Tamp

For machines equipped with a **TIE FINDER**, the **Auto Tamp** switch is located on the **Left Hand Key**.

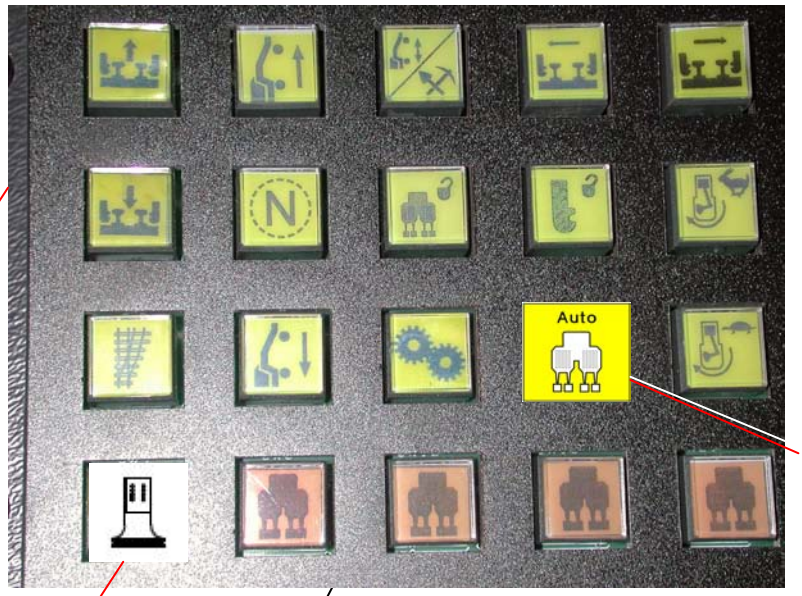

Left Hand Keypad
Figure TF -8

NOTE

<u>Auto Tamp</u> <u>replaces smart cycle on machines equipped with tie finding.</u>

Procedure:

1. Check cable connections on AutoMag sensor boxes and antennas. Make sure all are secured. Refer to Figure TF-9, 10 and 11.

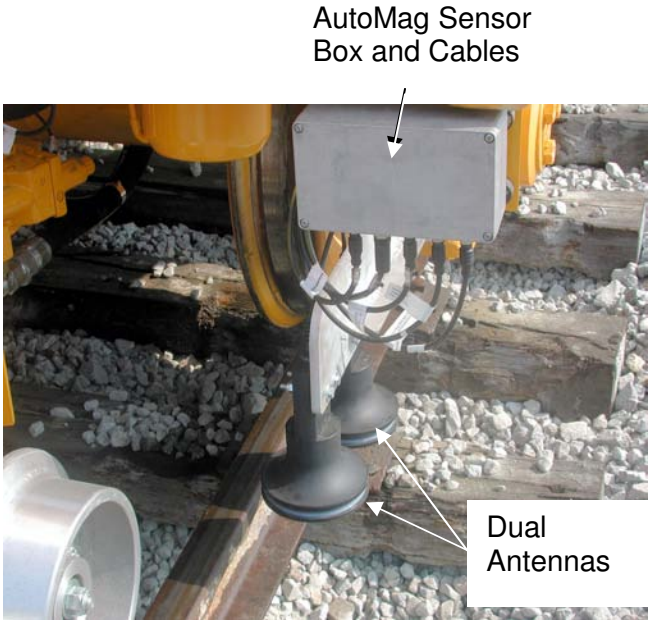

Figure TF- 9

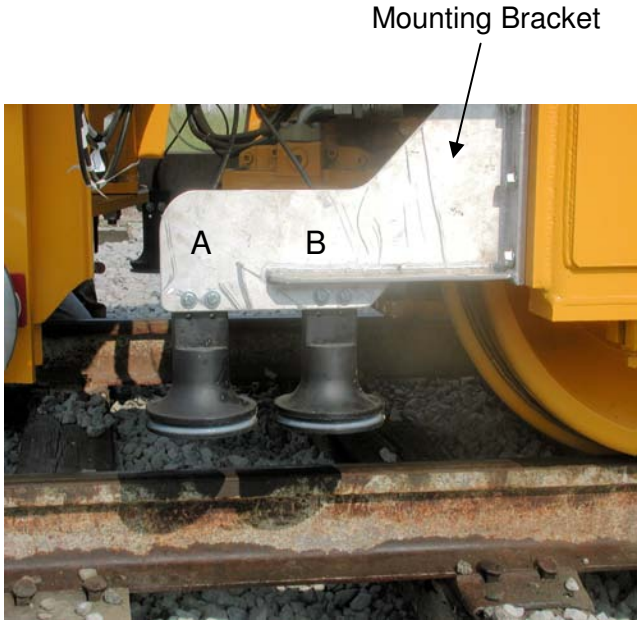

Figure TF-10

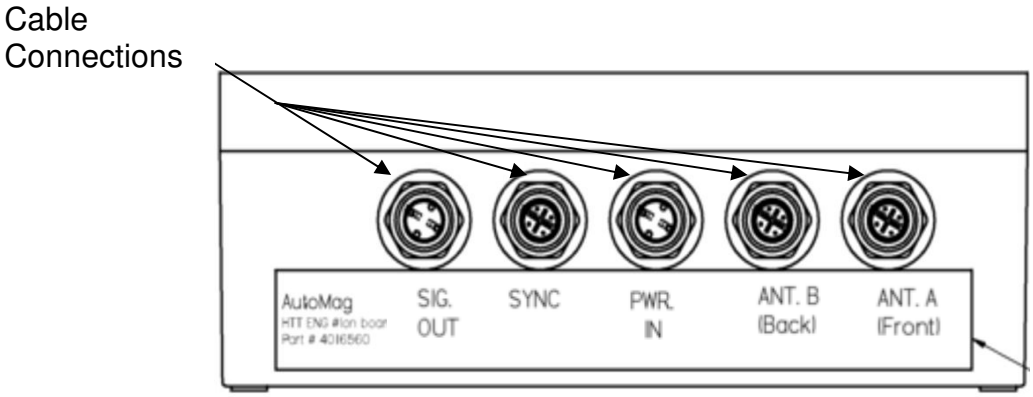

Figure TF- 11

2. Place the machine in WORK mode.

3. Turn ON tie finding by pressing **tie finder** switch **F3** from the Jupiter Touch Screen. The Automag Probe (Antenna) Setup Panel (Figure TF-6) will then appear. This panel allows the left or right probes to be turned ON or OFF and the selection confirmed. The Jupiter ON/OFF pushbutton on the left hand keypad can also be used as a shortcut to turn probes (antennas) On or OFF.

4. Move the machine forward in WORK mode for at least 25 ft.

NOTE This distance (25 ft.) is the approximate measurement between the center of the workheads and the center of the first target tie to be tamped. Auto Tamp will not be possible until the target tie has been detected by the sensor probes.

5. Check the following to make sure **tie finder** is operating properly:

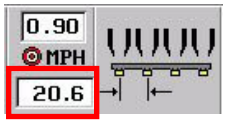

- Distance between workhead theoretical center and center of the next target tie to be tamped should be displayed in inches on the Jupiter Main Screen (middle).

NOTE There are two methods employed to start Auto Tamping. Typically, machines with a flat panel monitor will include the Region View Panel; these machines use method A). Older machines or machines without the Region View use method B).

8A. (**with** Region View)

Position the machine so that the workheads over an untamped tie. Verify on the Region View panel that at least one workhead is within the tie clearance window (see section on "Tie Region View Panel"). **Press the Auto Tamp switch on the engine control panel**. If all conditions are met, Auto Tamping can be started any time within the next 30 seconds by pressing the foot cycle switch.

8B. (**without** Region View)

Begin cycle by pressing the Cycle Foot Switch.

NOTE Use the foot switch when starting an AUTO TAMP cycle. The joystick cannot be used for this purpose. During initial startup, the foot switch will function as cycle switch. However, once Auto Tamp begins, the switch functionality changes and the switch becomes a safety switch.

9A. (**with** Region View)

Press the Cycle Foot Switch to start Auto Tamping. After the workheads start their cycle, the foot switch can then be released

9B. (**without** Region View)

With the Cycle Foot Switch pressed and cycle started, **press the Auto Tamp switch on the engine control panel**. Auto Tamp can be started anytime after

the foot switch has been pressed. Once Auto Tamp begins, release the foot switch.

After Auto Tamp starts, it will be necessary to press the cycle foot switch at least once every 3 minutes. **This is a safety feature.** Pressing the switch *anytime* within the 1-3 minute time period will reset the timer and allow a new 3 minute count to begin. Failure to press the foot switch in time will result in an audible beep being emitted (one every second). If this warning is ignored, Auto Tamp will stop.

Follow the same procedure listed above to restart Auto Tamp

Turning OFF Auto Tamp

To stop Auto Tamp:

- Press the **AUTO TAMP** switch or pull back (or push forward) on the Joystick cycle switch

Joystick Functions (Auto Tamp Only)

During **AUTO TAMP**, moving either **Clamp Frame Joystick**:

- Forward will result in a 0.1 MPH target launch speed increase.
- Backward will result in a 0.1 MPH target launch speed decrease

NOTE

Target launch speed changes should be made incrementally. For example, move the joystick in the desired direction (FWD/REV) once or twice every few ties. This will allow the machine to “learn’ the new track conditions.

During **AUTO TAMP**, moving either **Workhead Joystick**:

- Forward will add ¼ inch to the workhead adjustment number (move the workhead forward relative to the center of the tie).
- Backward will subtract ¼ inch to the workhead adjustment number (move the workhead backwards relative to the center of the tie).

Workhead and Clamp Frame Joysticks (R)
Figure TF-12

Optional Track Region View Feature (flat panel screens only)

An optional feature is available on AutoMag machines with a flat panel LCD monitor. The Track Region View feature modifies the standard screen configuration so as to add an additional panel where the located ties and information about them is shown in a real-time animated displayed. The operator can easily see where ties have or have not been identified, which ties have been tamped and which haven't, as well as numerous other details about the tie (see FigureTF-13 for a full description of the features). Additionally, as a result of the added space on the screen, engine diagnostic information is displayed at all times on the main panel, and the standard track traces on the main view display over 300 feet of track, as opposed to the roughly 150 feet normally displayed.

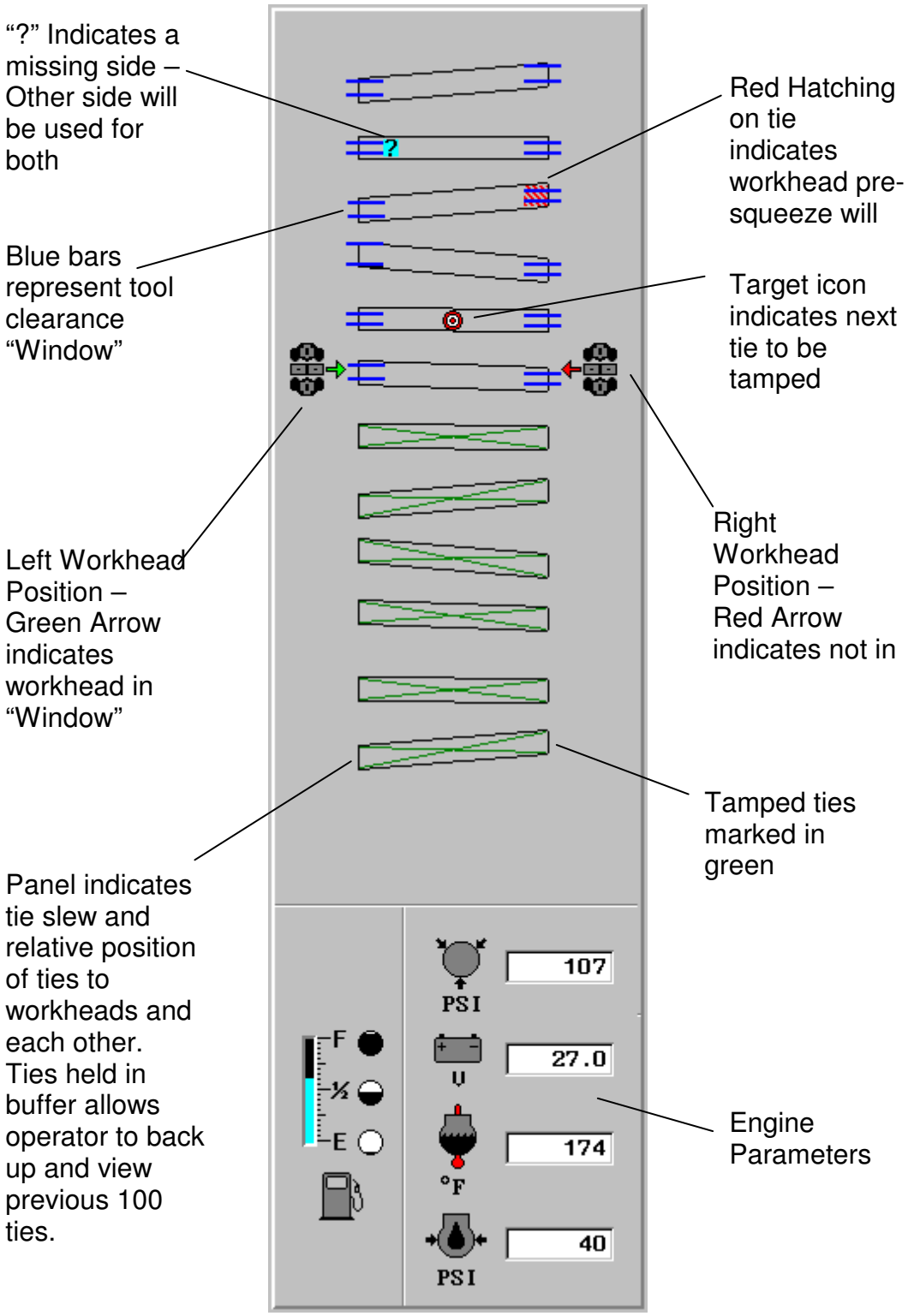

Track Region View Panel
Figure TF-13

AutoMag Dual Antenna Calibration

Note: Calibration and Adjustment are only required if an AutoMag box or antenna is being replaced. See Figure TF-14 and TF-15.

Procedure :

1. Position the machine with antenna midway between the ties.
2. Check 20 VDC and adjust R44 if required. (19.9 – 20.1 VDC – OK)
3. Check 5 VDC and adjust R43 if required. (4.5 – 5.5 VDC – OK)

AutoMag Dual Antenna Adjustment

Procedure :

1. Place a metal object under the rear antenna (B) and measure for 5 VDC at TP11 and com. The voltage will increase in the positive direction to maximum voltage.
2. Remove the metal object and the voltage will return to the normal . (+ 5 – 6.5 VDC)
3. Place the same metal object under the front antenna (A) and measure voltage at TP11. The voltage at TP11 will go to maximum in the negative direction.
4. Remove the metal object and the voltage will return to the normal . (+ 5 – 6.5 VDC)

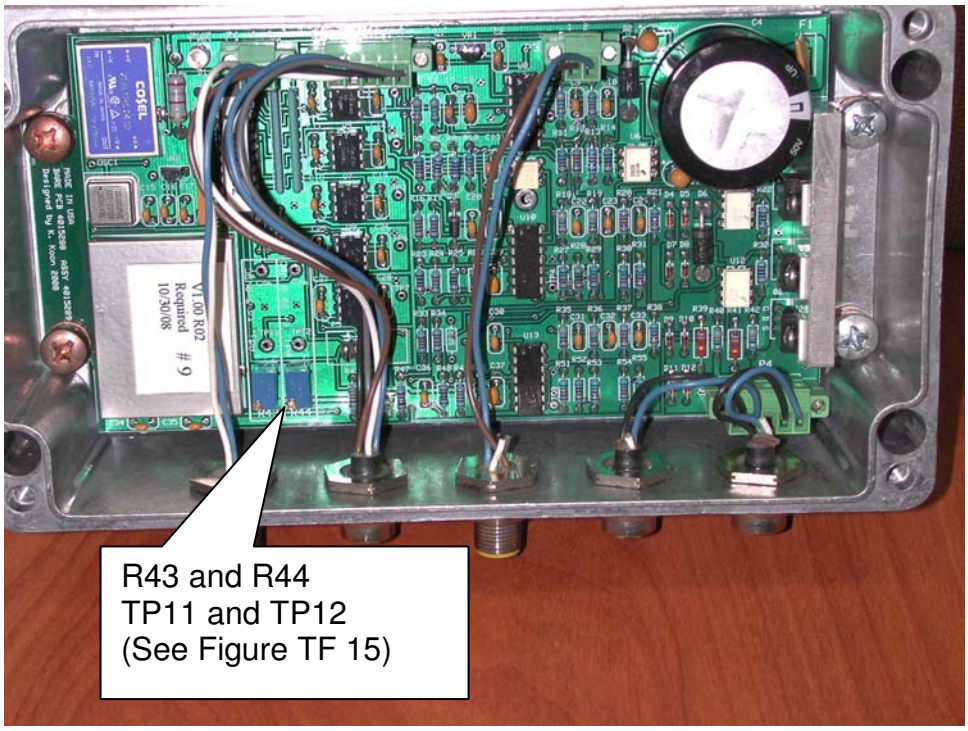

Figure TF-14 Automag Sensor Box *(Dual Antenna)*

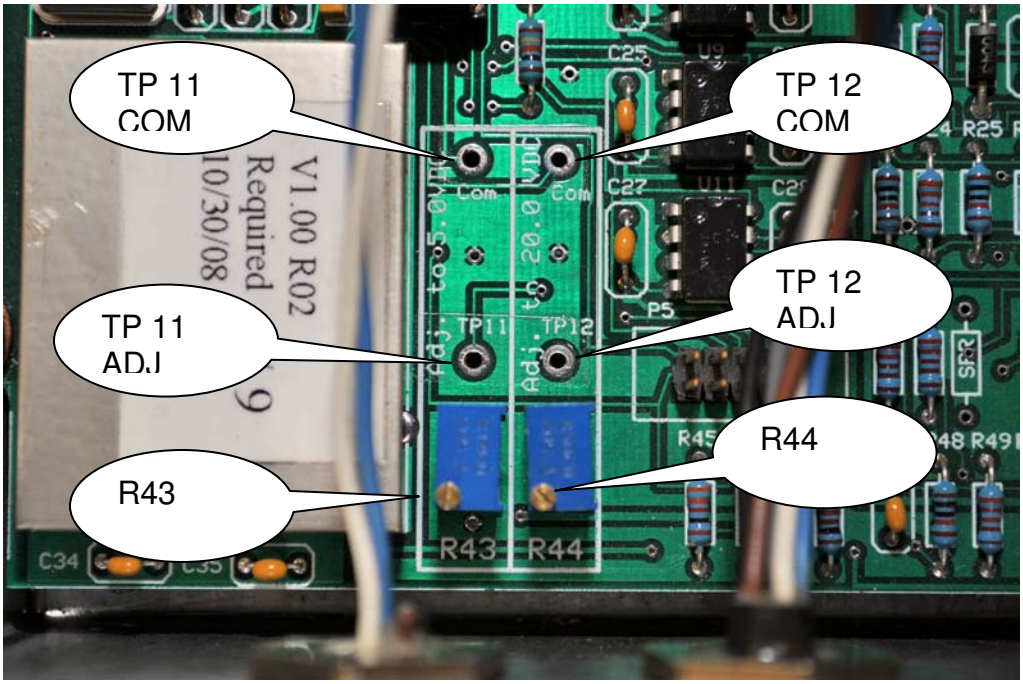

Figure TF-15 Automag Sensor Box Calibration/Adjustment

CHAPTER 4
TAMPING / SURFACING

TABLE OF CONTENTS
TAMPING / SURFACING

CHAPTER 4

Delta Leveling System 4-1
- Surfacing Track 4-1
- Theory of Operation 4-2
- Projector 4-2
- Shadowboard 4-3
- Receiver System 4-3
- Surface Indicator Lights 4-4
- Inclinometer 4-4

Surfacing 4-4
- Error Correction Ratio 4-4
- Surfacing Capabilities 4-6
- Lifting Track.....4-6
- How Much Lift? 4-6
- Out of Face Surfacing Vs Spot Surfacing 4-7
- Run-In or Run-Out 4-7
- Calibrating and Setting Defaults for the Surfacing System 4-8
- Lining System.....4-10
- Basic Explanation.....4-10
- Biasing Requirements 4-10
- Control Over Track Movement 4-11
- Theory Of Operation 4-12
- Calibrating and Setting Defaults for the Lining System 4-13
- Why Calibrate The Liner.....4-13

Tamping 4-16
- Adjusting Workhead Opening 4-16
- Tamp Cycle 4-18
- Downfeed 4-18
- Setting Lower (Squeeze) Position.....4-19
- Squeeze-In 4-20
- Adjusting Workhead Squeeze-In Speed 4-20
- Squeeze Pressure 4-21
- Upfeed and Squeeze Out 4-22
- Setting Upper Standby Position 4-22
- Squeeze Out 4-23
- Tamping Tools 4-23
- Track Conditions 4-23
- Double Tamping 4-24
- Center Bound Track 4-24

TABLE OF CONTENTS
TAMPING / SURFACING

CHAPTER 4

Combo Clamp Frame 4-25
- Theory of Operation 4-25
- Jacking 4-25
- Jack Release 4-26
- Adjustments 4-26
- Combo Frame Lower Limit Switches 4-26
- Combo Frame Outer Limit Switches 4-27
- Combo Frame Upper Limit Switches 4-29
- Bumper Bolts 4-29
- Hook Pressure Transducers 4-30

Setting Up the Machine for Work 4-32
- Procedure 4-32
- Set Up – Buggies 4-32
- Set Up – Machine Parameters 4-34
- Rubber Banding 4-37
- Working 4-38
- Smart Cycle 4-39
- Clamp Hook Out 4-40
- Clamp Hook Digging 4-40
- Run-out 4-41
- Preparing to Travel 4-41
- Restarting a Run Out 4-43
- Switch Lifting 4-45
- Time and Date 4-46
- Enhanced Distance Panel 4-47
- Surface Work Zeroes 4-47
- Lining To Stakes or Monuments 4-48
- Low Point Compensation 4-49
- New Surface Fit Control Panel 4-50
- Super-elevation Compensation 4-51

DELTA LEVELING SYSTEM

Surfacing Track

Surfacing track is defined as the smoothing of the track structure both longitudinally as well as transversely.

The surfacing system currently used on the MKIV tamper is sometimes referred to as the "Delta" system. This system consists of 3 points that are directly referenced to the rails.

The 3 point surfacing system consists of:

1. Projector
2. Shadowboard
3. Receiver Group
    - A. Photo-cells
    - B. Receiver Amplifiers
    - C. Inclinometer

During normal operation the projector emits an infrared light which spreads out, shines over the shadow board into both receivers. Refer to figure 4-1.

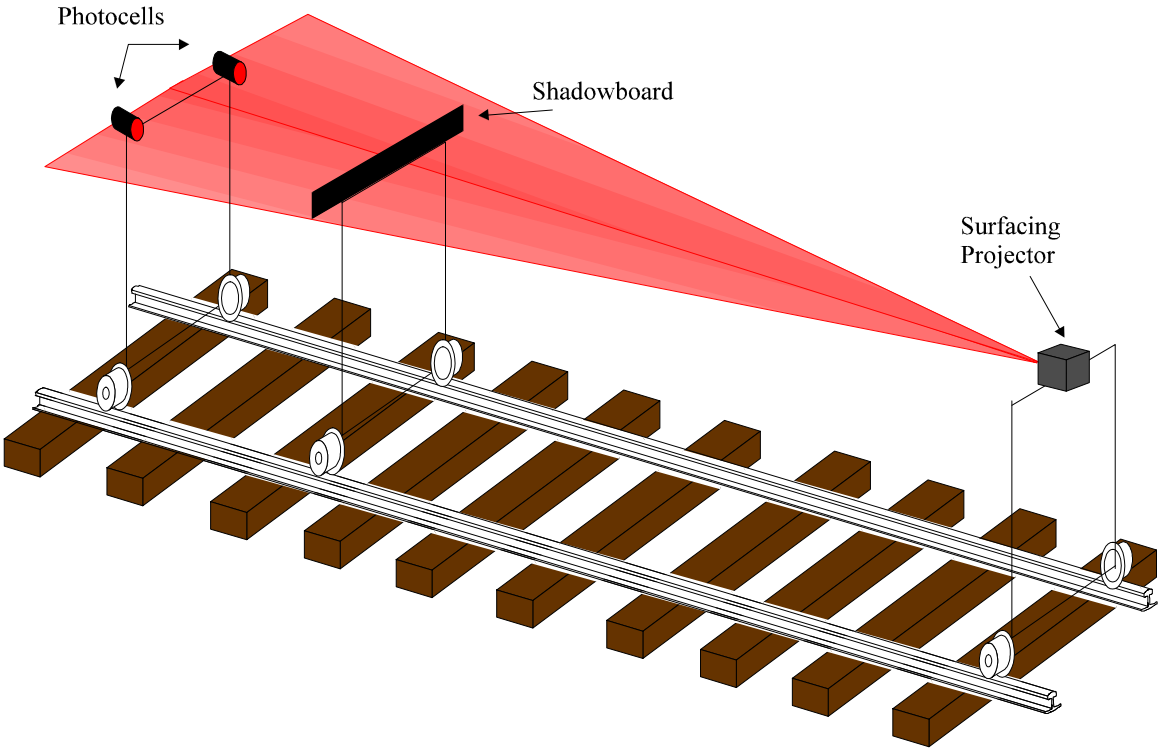

Figure 4-1

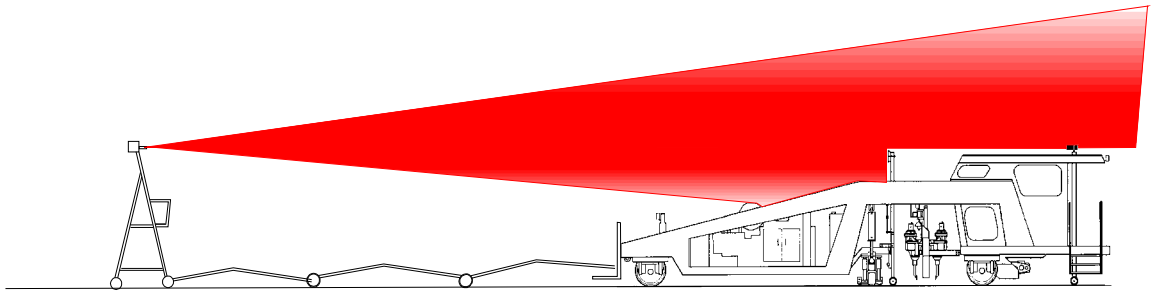

Figure 4-2

Theory of Operation

When the operator initiates cycle with the F2 surface projector ON. The program enables the output module which supplies power to the jack valve coils. Jacking occurs until the shadow board intersects the infrared light beam. When the light beam is blocked, the program de-energizes the outputs to the jacking coil and turns off the surface indicator lights.

The total lift that's applied to the track is controlled by changing the receiver (photocell) linear actuator position. Actuator position can be changed manually by using the lift up/down arrow push button on the operator R/H keypad or automatically by the computer controlled surface ramp. System V will make a lift respectively to what the operator installs through manual changes, the surface lift panel (rubber banding) or "best fit" (optional) utilizing the default rates for surfacing.

Projector

The projector is the device that produces the infrared beam and projects it back to the machine at a preset frequency. On the MKIV machine the projector motors are DC as opposed to AC on the MKI, II, and III. The voltage to the motors is set at 15 VDC which produces 482 (+ or - 5%) impulses per second. Refer to figure 4-2 and 4-3.

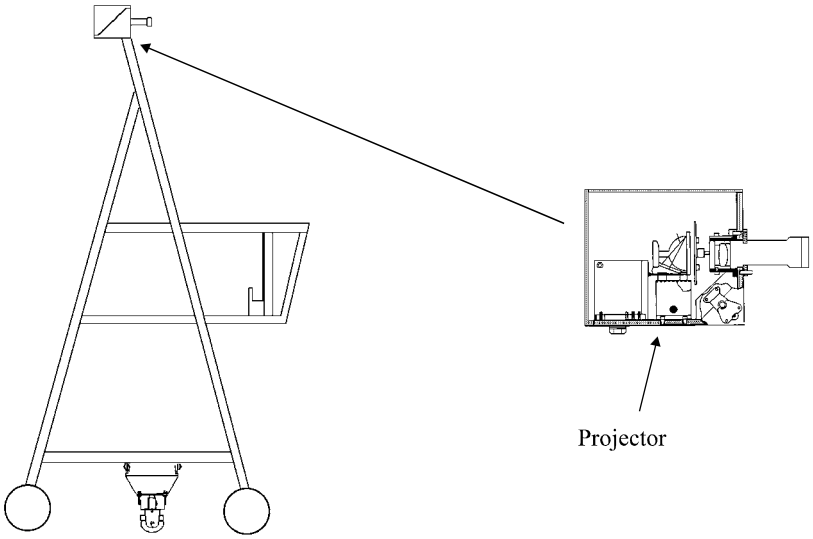

Figure 4-3

Shadowboard

The shadowboard blocks the light beam during the jacking cycle. It is a fixed height (130”) and referenced directly to the rail just behind the clamp frame. Under normal operating conditions, the rail clamps lock on to the rail at which time jacking commences. The jacks lift the rail. The shadowboard also rises until the shadowboard intercepts the infrared light beam. At this point the jack valves would de-energize and jacking would cease. Refer to figure 4-2 and 4-4.

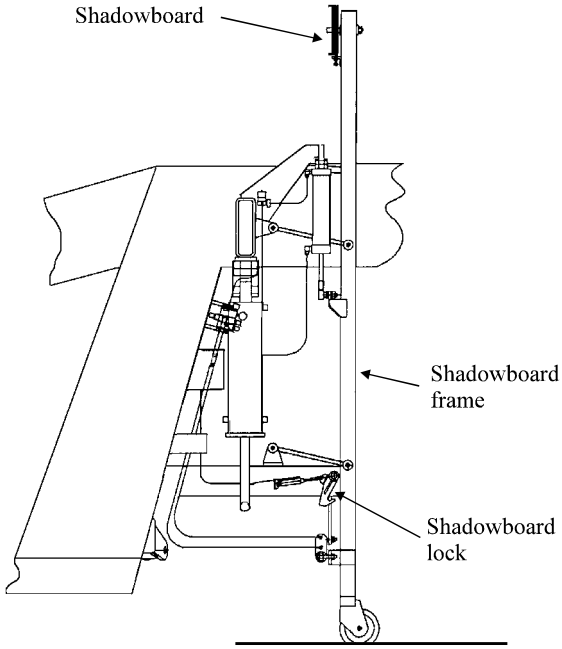

Figure 4-4

Receiver System

The receiver system consists of the photocells, mounted on the receiver buggy, and receiver amplifiers, mounted in the master control box of the machine cab. The photocells pick up the light beam from the projectors and convert the light into an electrical signal that is directed to the receiver amplifiers. The receiver amplifiers receive the signal from the photocells and amplify the signal voltage into a working voltage that the computer can read. Refer to figure 4-5.

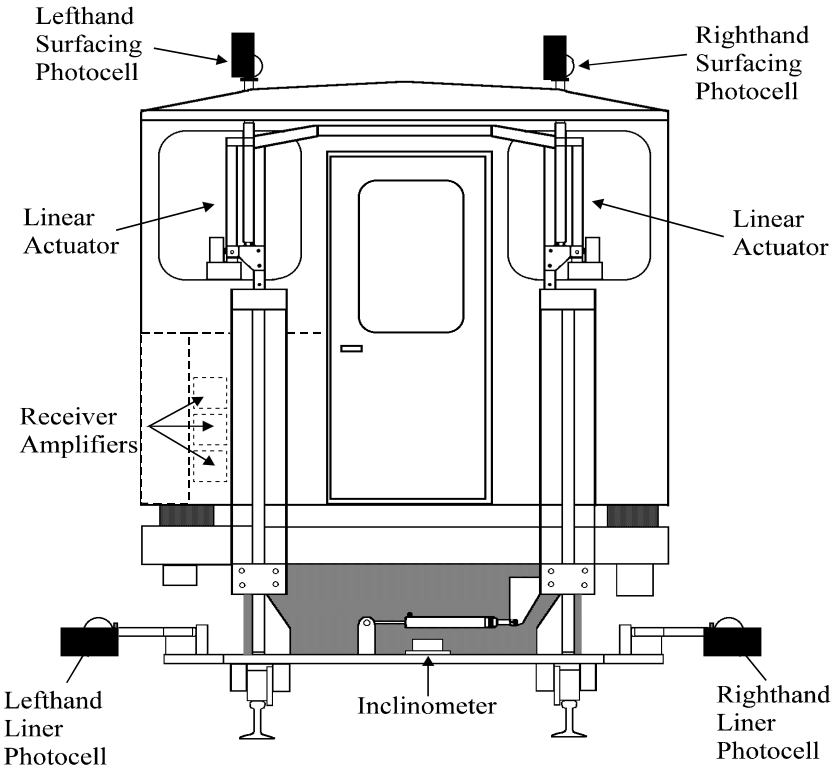

Figure 4-5

Surface Indicator Lights

There are two (2) surface indicator lights (red) located in the center of the main computer screen and on the center panel in front of the operator. Refer to figure 4-6. If the computer receives a signal from the amplifiers the left and/or right surface indicator lights illuminate which indicates to the operator that jacking will occur.

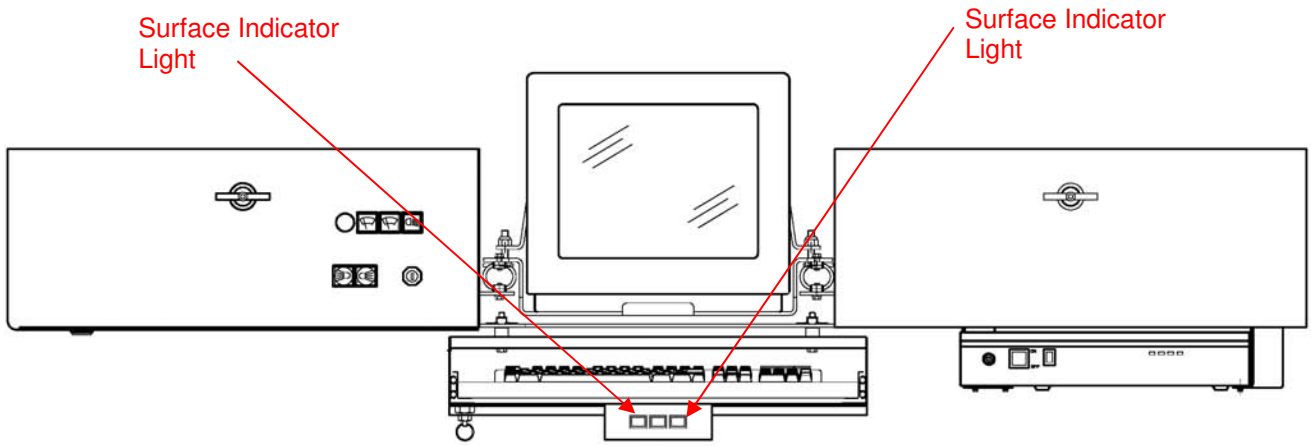

Figure 4-6

- If the lights are not illuminated, this indicates that the shadowboard has the beam light blocked, and jacking will not take place.
- If the left surface indicator is ON, the left rail will be lifted.
- If the right surface indicator is ON, the right rail will be lifted.

NOTE: If only one (1) indicator is ON, only one (1) rail is lifted. Therefore, the track is not lifted to level.

Inclinometer

The Mark IV uses an inclinometer to establish crosslevel. The inclinometer is mounted on the lower receiver cross member. If the track surface varies from level the inclinometer signal to the computer will change. The computer, seeing a voltage change, will drive the appropriate receiver(s) up or down in order to compensate for cross level variations. Refer to figure 4-5.

Surfacing

Error Correction Ratio

The MKIV makes corrections to the track using an error correction ratio which is calculated by dividing the total length of the surfacing system (from projector to receivers) by the distance from the shadowboard to the receivers. Refer to figure 4-7.

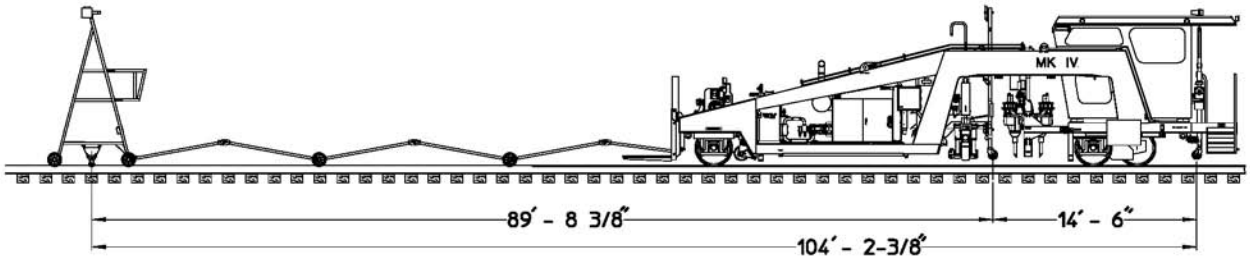

Figure 4-7

- Distance from projector buggy to receiver buggy = 104' 2-3/8"
- Distance from receiver buggy to shadowboard = 14' 6" (14.50)
- 104.2/14.50 = correction factor (7.19:1)

The error correction ratio is approximately 7:1 with 3 pusher bars extended.

The correction ratio described above combined with the illustration will help you to both visualize and understand how the correction factor affects the track being lifted.

Scenario for removing a 7" dip.

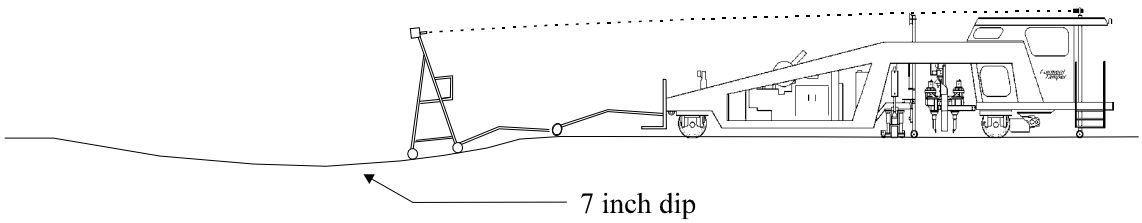

Figure 4-8

If the projector buggy were to move into a 7" dip, the track back at the machine would be affected by 1". Refer to figure 4-8 and 4-9.

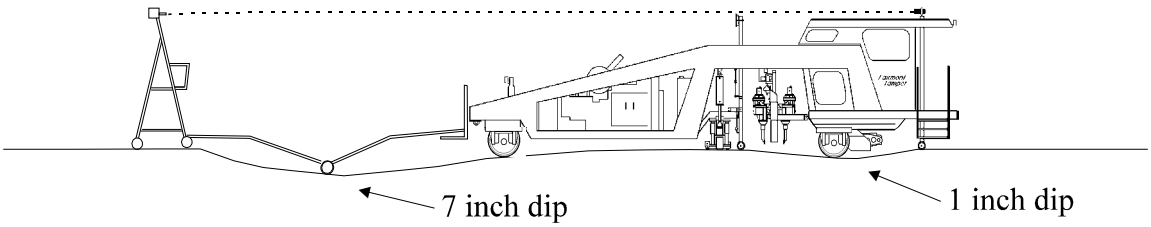

Figure 4-9

Once the shadowboard reached the 7" dip however, it would remove this error 100%. Refer to figure 4-10.

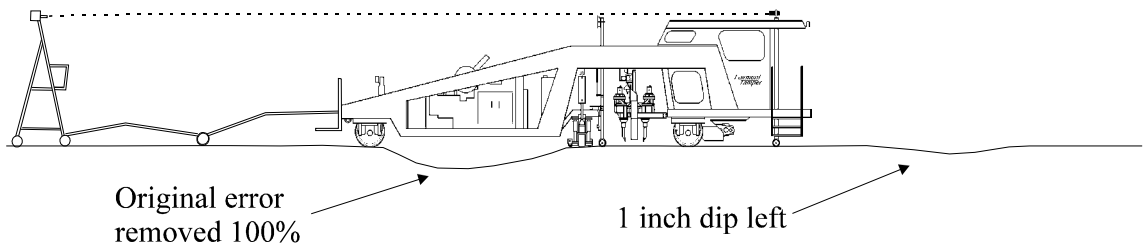

Figure 4-10

Therefore, what the machine has done is: removed the 7" dip and transposed it back 89’3’" to the shadowboard. In addition it has also reduced the dip to 1" error. Refer to figure 4-10 and 4-11.

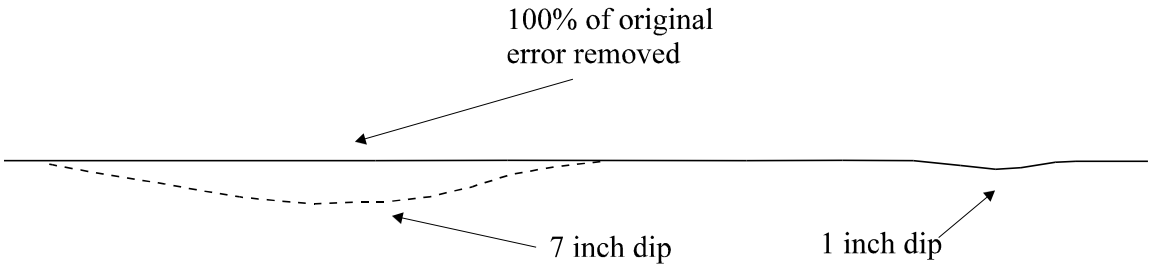

Figure 4-11

Surfacing capabilities

Lifting Track

The Delta system enables the surfacing machine to perform the following functions: out of face surfacing, spot surfacing, run in, run out, surfacing into fixed objects, surfacing away from fixed objects, etc.

- Quality surfacing requires that all track errors be removed.
- Quality surfacing can only be accomplished when the track has been lifted high enough.

How Much Lift?

The amount of lift applied to the track is very important to provide an acceptable surface. If the machine does NOT lift the track high enough to remove all of the errors, the surface will NOT be acceptable.

For example, assume the track is being lifted by 1". Also, assume there are some 2" errors (high spots) in the track.

Because the track is NOT being lifted 2" to correct these high spots, there will be 1" errors left in the track after it has been surfaced. Refer to figure 4-12.

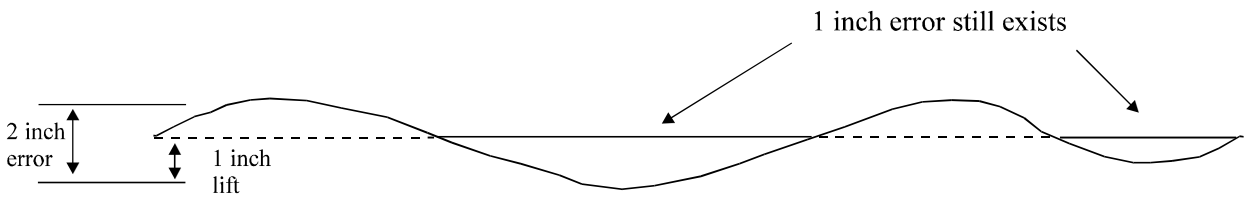

Figure 4-12

When you are surfacing track, you must make sure the track is lifted high enough to correct any high spots in the track.

Out of Face Surfacing Vs Spot Surfacing

- Out of face surfacing means smoothing the track both longitudinally as well as transversely continuously over a given section of track, generally in access of 100' in length.

- Spot surfacing refers to the smoothing of short sections of track both longitudinally as well as transversely. These sections generally measure less than 100' in length.

Run-In or Run-Out

Run-in is the transition from existing track surface to surfaced track. Run-off is the transition from surfaced track to existing track surface. In general the same rules that apply to a run-in also apply to a run-out.

There are several factors that influence the length of the transition or run-in:

a) Amount of raise.
b) Train speed.
c) Run-up temporary or permanent.

- A **short run-out** serves slow speed traffic and for sections of track that will be reworked in the near future (temporary fixes).

- A **long run-out** serves high-speed traffic and is considered to be a permanent fix.

NOTE: The factory default for lift is 1 inch with a ramp rate of 80 feet. 1 inch per 80 feet is considered a long run-in or out and 1 inch per 60 feet is considered a medium run-in or out and 1 inch per 40 feet is considered a short run-in or out. Other lifts and ramp rates can be used, example ½ inch per 40 feet is the same as 1 inch per 80 feet as far as the ramp rate is concerned.

But the default lift would be ½ inch when "finding the lights" without manually setting a desired lift. The ramp rates should always be set to the acceptable value for the class track being worked. F5 Work Start/Stop/Resume Panel is normally used to create most ramps in or out. For a description see F5 work start/stop/resume panel starting at page 3-54 or 3-76. Automatic run-out ramps are always ramped from the present surface lift to 1½ inch below zero lift.

The superelevation defaults should be set for the normal elevation ramp rate to be applied when "finding the lights" and the maximum elevation ramp rate warning when rubber banding. The F5 Defaults Table Panel is used to set the superelevation defaults (F5 is on the expanded track view, third toolbar set).

NOTE: The factory default for a normal elevation ramp rate is ¼ " inch per 40 feet and the maximum elevation warning ramp rate is ½" per 40 feet.

Calibrating and Setting Defaults for the Surfacing System.

Why Calibrate the Surface?

The surface uses many components in the process of getting information from the track to the computer. These include mechanical components (actuator potentiometer, inclinometer), computer hardware (circuit boards, etc.) and the program software (defaults). Surface calibration is simple a means of adjusting the hardware and software so that the surface information is correctly applied to the track.

When setting up new machines or replacing a surface actuator, the surface system requires the actuator(s) be calibrated and new record zeros set. To calibrate an actuator see F1 - Actuator Calibration Menu (page 3-42) for a description of the calibration procedure (F1 is under F3 calibration menu, second main toolbar set). After the actuators are properly calibrated the surface record zeros will need to be set. To set new record zeros see F5 - Record Zero Calibration Panel (3-48) for a description of the surface record zero procedure (F5 is under F3 calibration menu, second main toolbar set). Note the surface record zero process can be performed multiple times.

The surfacing system also requires that the inclinometer zero is properly set. To calibrate an inclinometer zero see F3 - Inclinometer Calibration Panel (page 3-46) for a description (F3 is under F3 calibrate menu, second main toolbar set).

The surface defaults should be set to the normal average lift and lift ramp rate for the type of track to be worked. The F5 Defaults Table Panel is used to set the surface defaults (F5 is on the expanded track view, third toolbar set page 3-83).

The F1 - Pusher Bars Panel must be correctly set (F1 third main toolbar set). The number of pusher bars extended and the correct distance for the number of pusher bars must be entered so that appropriate internal correction ratios are properly calculated.

NOTE: Insure that the displayed number of buggies and footage are the same as the actual number of buggies and footage. Distance between projector and shadowboard is

measured from the center of the liner projector gauge wheel to the center of the shadowboard gauge wheel.

Select the machine options that apply to the type of track to be worked. F5 Change Options Panel is located on the first main toolbar set (page 3-23). Example: (1) Working tangent track with slight grades (small hills or valleys), a low lift and single tamping. Options that may be selected are Auto Traction with zero traction delay, Index Brake in Cycle (OFF), Clamp Pressure Sustain (ON or OFF), and Squeeze Waits On Lift (OFF). (2) Working tangent track with steep grades (large hills or valleys), a medium to large lift and single tamping. Options that may be selected are Auto Traction with some traction delay, Index Brake in Cycle (ON), Clamp Pressure Sustain (ON or OFF), and Squeeze Waits On Lift (ON or OFF).

Lining System

Basic Explanation

The MKIV uses a three point lining system which utilizes the same principles of operation as the surfacing Delta system. The liner uses a modulated infra-red light in conjunction with a liner shadowboard and liner receiver.

Remember that when surfacing track with the Delta Leveling System, the track has only one way to move and that is an upward movement. In lining, all three points are laying over on their side and will allow the lining system to move the track and lining shadowboard in two directions, left or right. Refer to figure 4-21

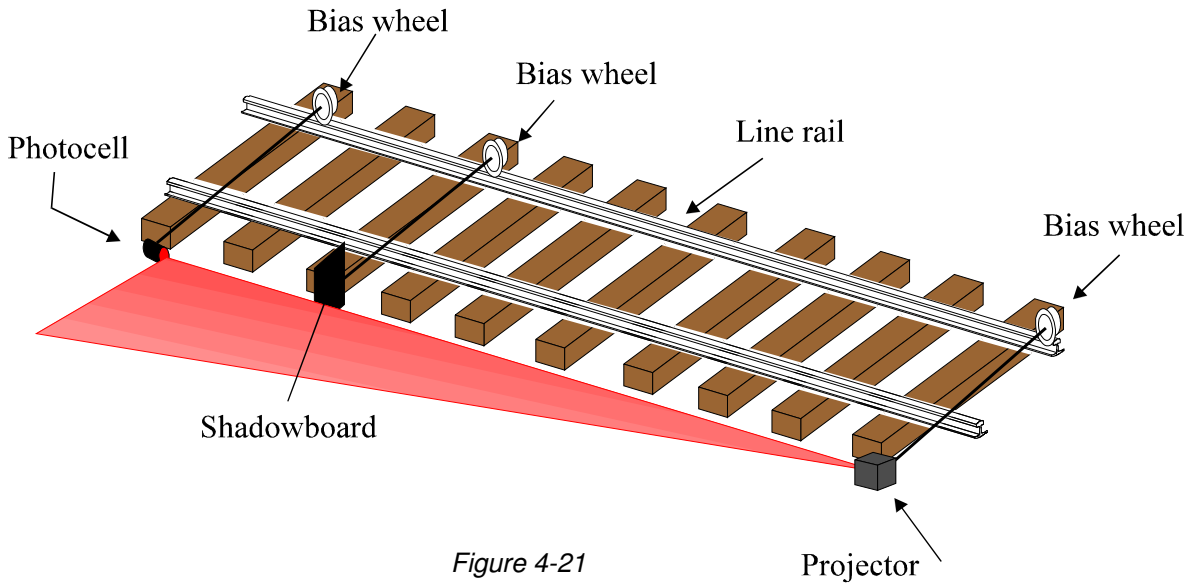

Figure 4-21

Each lining station must have its components installed on the same side of the machine. This means that in a curve the lining projector, shadowboard and receiver must be placed on the low rail of the curve. The opposite rail must have each stations reference wheels biased, so they cannot move away from the Line Rail.

NOTE: The line rail will always be opposite to the side the components are installed. The line rail will always be the high or outside rail in a curve.

Biasing Requirements

Each station; projector, shadowboard and receiver have a method of keeping the line rail reference wheels held tightly against the rail.

- Air cylinders are used to bias the shadowboard and receiver buggies.
- Springs are used to reference the front buggy lining components. An optional air bias/dual reference liner kit is available for the MKIV Tamper.

Control Over Track Movement

In surfacing track with the MKIV receiver height determines the amount of lift in one direction (up). The liner shadowboard likewise controls the amount of track movement, only now it is in two directions (left or right).

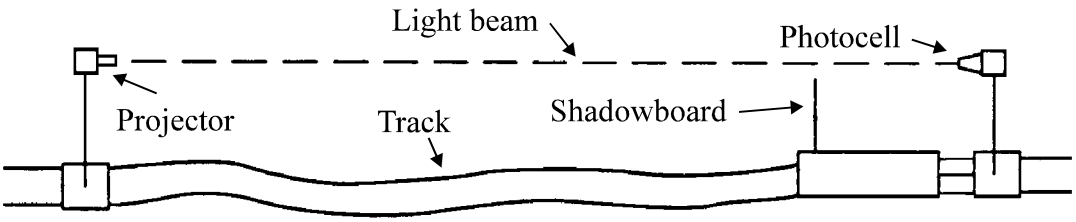

Figure 4-22

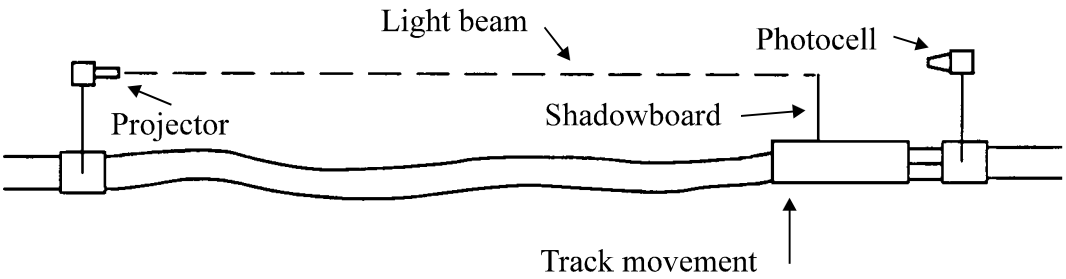

Figure 4-23

In the situation where the liner photocell can see the projector light when lining takes place, the track and liner shadowboard must be moved until the outside vertical edge of the shadowboard mask intercepts and blocks any further light being seen by the photocell. At this point lining stops. Refer to figure 4-22 and 4-23.

Located on the operator control panel, in front of the operator and on the main screen is the liner indicator light. If the shadowboard is positioned so that the photocell can see the light beam, the beam light indicator will be on. Should the shadowboard not allow the photocell to see the projector light, this beam light will be off. Refer to figure 4-24.

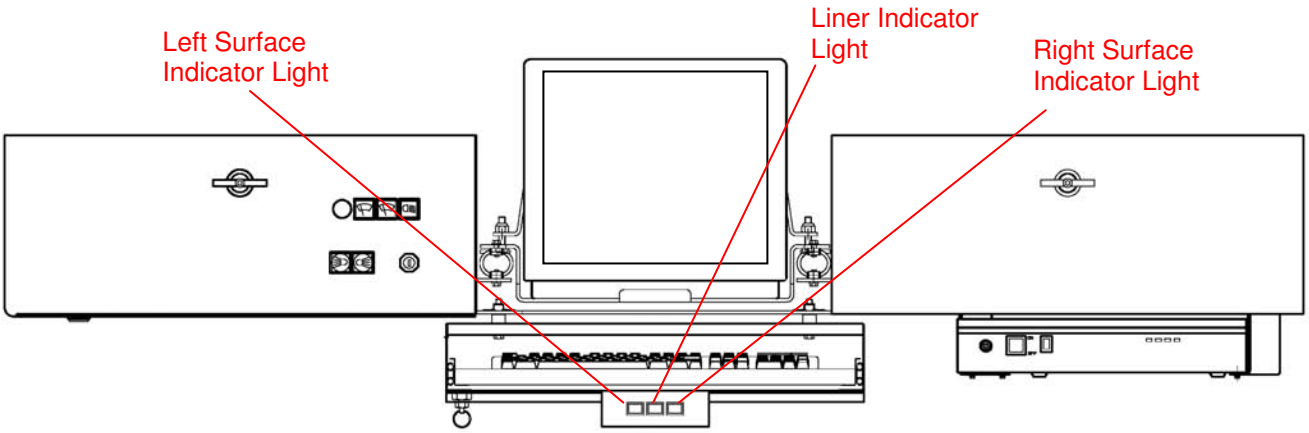

Figure 4-24

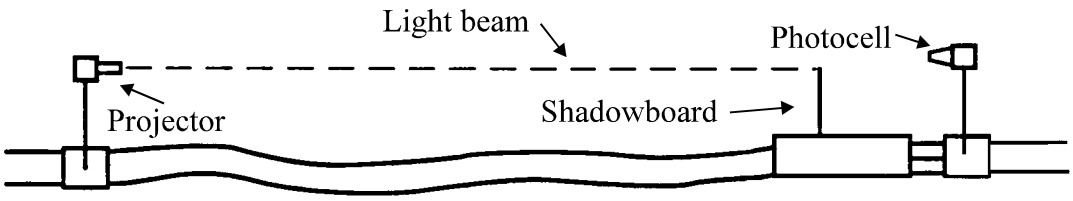

Figure 4-25

Figure 4-25 shows the shadowboard covering up the projector light.

When lining takes place, the track and shadowboard must be moved to the left until the beam light comes on, (figure 4-26), then reverses direction moving the track and shadowboard to the right until cut off occurs. Figure 4-27.

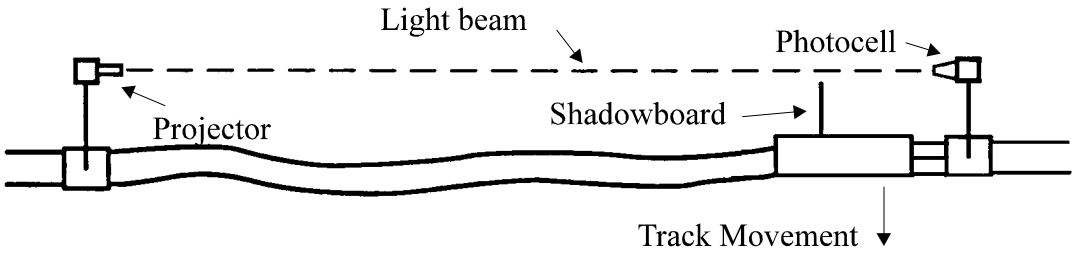

Figure 4-26

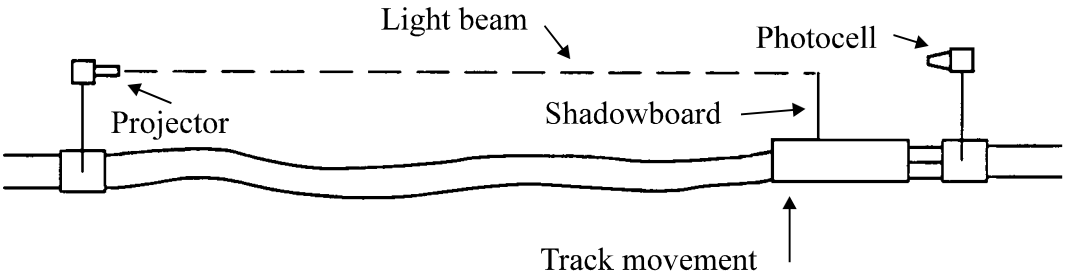

Figure 4-27

Notice examples in figure 4-23 and figure 4-27, the last movement the liner must do is to move the track and shadowboard in the same direction that the shadowboard is installed, always stopping on the outside vertical edge of the shadowboard.

Theory of Operation

When the operator initiates cycle with the F3 liner projector ON. The program enables the digital input/output module which supplies power to the lining valve coils. During cycle, if the lining shadowboard has the light beam blocked, the program enables the appropriate lining coil and moves the track until the photocell sees the light beam. When the photocell sees the light beam the program disables the lining coil. The program then enables the other lining coil to reverse the lining direction until the light beam is blocked by the shadowboard. When the

beam is blocked, the Jupiter Control System turns off the line light beam indicator and this completes a lining cycle. During cycle, if the photocell sees the light beam, the program enables the appropriate lining coil and moves the track until the lining shadowboard blocks the light beam. When the light beam is blocked the Jupiter Control System is de-energized, turns off the line light beam indicator and this completes a lining cycle.

The track is controlled by changing the shadowboard linear actuator position. Actuator position can be changed manually by using the throws left or right arrow push button on the operator R/H keypad or automatically by the computer controlled best fit.

Calibrating and Setting Defaults for the Lining System.

Why Calibrate the Liner?

The liner uses many components in the process of getting information from the track to the computer. These include mechanical components (actuator potentiometer, inclinometer), computer hardware (circuit boards, etc.) and the program software (defaults). Liner calibration is simply a means of adjusting the hardware and software so that the lining information is correctly applied to the track.

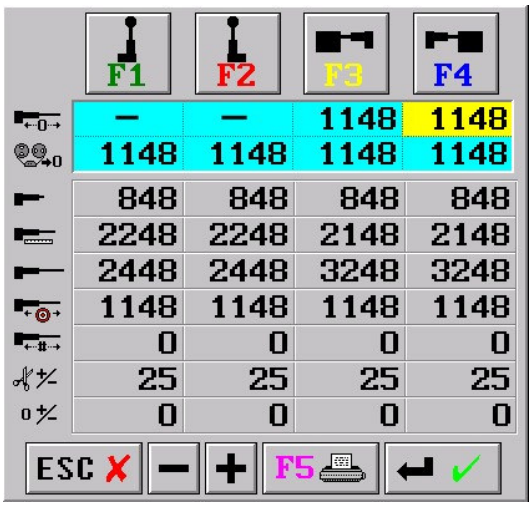

Illustration #1

When setting up new machines or replacing a L/H or R/H liner actuator, the liner system requires the actuator(s) be properly calibrated and the line record zero(s) be set. To calibrate either the L/H or R/H actuator see F1 - Actuator Calibration Menu (page 3-42) for a description of the calibration procedure (F1 is under F3 calibration menu, second main toolbar set). After the actuator(s) is properly calibrated the L/H or R/H line record zero will need to be set. To set a new record zero see F5 - Record Zero Calibration Panel (page 3-48) for a description of the L/H or R/H line record zero procedure (F5 is under F3 calibration menu, second main toolbar set).

NOTE: L/H or R/H line record zero process can be performed multiple times.

After the L/H or R/H actuator has been calibrated and the line record zero is set, the next step is to set the line zero for the track reference to be worked. Press F3 on the second main toolbar set to open the calibration menu. From the calibration menu select F2 Actuator Calibration Data Panel. After the data panel opens select the appropriate line zero (F3 or F4) for changing (F4 is selected in illustration #1, for a complete description of this panel see page 3-41). The selected line zero will be highlighted in yellow. The record zero value that was previously established will be used to enter a new approximate (starting or rough) line zero. Use either the PC keyboard or the plus/minus key to enter or adjust the highlighted line zero value to the present record zero value plus 7 digits. The record zero value is displayed in light blue under the presently selected line zero value. In illustration #2 the F4 right record zero value (light blue) is 1148 digits. When adding 7 digits to this value, the value to be entered in F4 right line zero (highlighted in yellow) is 1155 digits (1148 + 7 = 1155). When the number is

entered correctly the line/record differential value (gray table, 0 +/- value) will be 7 digits. After the F4 line zero is correctly entered (value in yellow), press the ENTER key to accept the new line zero value (highlighted yellow box will change to light blue). Pressing ENTER a second time accepts all changes to the panel and closes this panel or ESC will discard all changes. The next step is to start lining a section of tangent track, position the machine on a minimum of 600 feet of tangent track, turn ON the lining and/or surfacing projector(s). Move the machine forward and or backward to insure the liner gauge wheels are biased properly. Clear all data from the main track graphs by using the F2 Erase/Wipe track button on the third main toolbar set. After the F2 wipe, the starting footage will be zero feet and all panel graph yellow fit lines will be on zero. Select the F5 Work Start/Stop/Resume Panel (see page 3-54) on the third main toolbar button set. This will open the work start/stop/resume panel, select F1 “finding the lights.” When F1 is selected the actuator(s) moves to the photocell cutoff position and the actuator will hunt on the cutoff position. After about 5 to 10 seconds of hunting press the ENTER key to accept this starting position or the ESC discards this starting position. When Enter is selected the program will automatically establish a default line ramp to zero line and if the surface projector was selected a ramp to the default surface will be established (for a complete description see page 3-84 lift default values). Start surfacing and lining the track to be worked. When the machine has completed the line ramp back to zero line, start observing the overall displacement of the track, there should not be a sustained right or left movement of the track. If the track is being shifted off of zero line, use either the left or right throws arrow key (R/H keypad) to add a throws shift to correct this problem. The amount of throws shift entered can be viewed in the white box under the throws graph, main or expanded screen. Note throws shift changes should be made in increments no larger than 1/8” every 3 or 4 ties. When satisfied with the lining of tangent track the F3 line zero manual adjust panel is used to set a new line zero for the line reference selected, for a complete description of F3 line zero manual adjust panel see page 3-47. The F3 line zero manual adjust panel is under F3 actuator manual zero adjust panel and the F3 actuator manual zero adjust panel is under F3 calibrate menu of the second main toolbar set. After the new line zero is updated, press F3 on the second main toolbar set to open the calibration menu. From the calibration menu select F2 Actuator Calibration Data Panel. After the data panel opens check the new line/record differential value (0 +/-). Normally this differential value is between zero and +25 digits. If less than (below) zero digits or greater than (above) 25 digits, check the angle of the lining shadowboard blade, I.E. blade must be perpendicular to the track. Also, when getting a record "0"(zero) use a "b" style on the defaults panel.

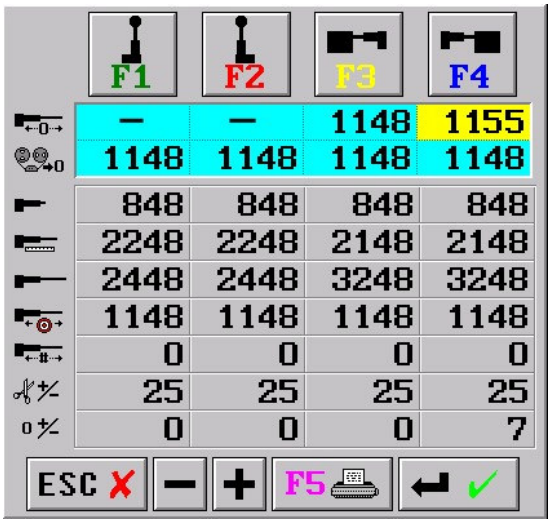

Illustration #2

Other items to check, combo clamp bias pressure could be too low or high, R/H and L/H lining cylinder safety relief’s may be improperly set, lining system light beam differential may be above 1/16 inch light ON/OFF and lining system reference wheels may not be properly biasing. Note this completes the setting of the record and line zeros for the presently selected line reference. This procedure may need to be preformed to the other line reference.

The line and throws defaults should be set to the normal curve type for the track to be worked. The F5 Defaults Table Panel is used to set the line and throws defaults (F5 is on the expanded track view, third toolbar set).

TAMPING

The entire tamping cycle of the MKIV is automatically controlled by the operator and can be preset to suit various ballast conditions. Before any tamping is undertaken it is necessary to understand the tamp cycle and the adjustments that affect it.

Adjusting Workhead Opening

To prevent hitting ties during downfeed the workhead opening should be set the same as the average space between the ties.

Before making any adjustments, place the WORK/TRAVEL switch in the TRAVEL mode. Failure to do so could result in unintended movement of the machine or work components. START AND END WITH THE SPRING PARKING CONTROL BRAKE IN THE "APPLIED" POSITION (Push In the push/pull knob) AND **THE TRAVEL/SERVICE HAND BRAKE LEVER IN THE "RELEASED" POSITION** (push lever forward (toward front of seat)). Parking Brake is also commonly referred to as the MAXI BRAKE CONTROL.

Procedure:

1. Determine the average spacing between the center of the ties at the work site. Refer to figure 4-31. Using the average spacing from fig. 4-31, the workhead opening should be 19 inches.

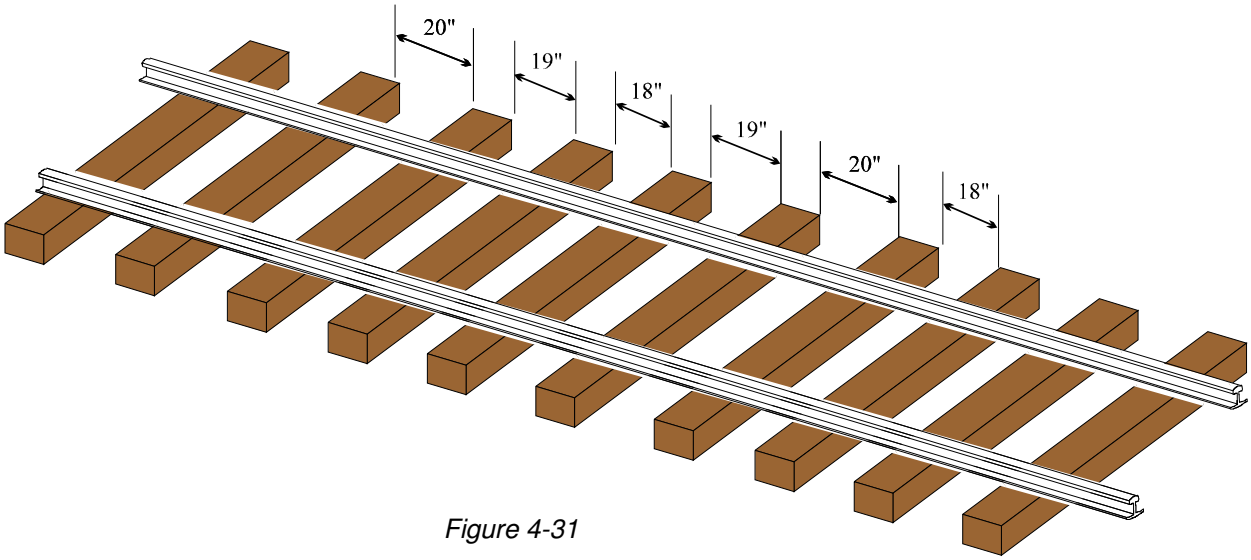

Figure 4-31

2. Start the engine at idle speed (1000 RPM).

.

NOTE: Check the Main screen to make sure both pumps are on. If pumps are off turn pumps on

3. Place the **TRAVEL/WORK** switch, to the **WORK** position.

Figure 4-32

NOTE: Make sure the workheads are in the raised position and secured in their safety locks. Refer to section 1 for Safety lock information.

4. Push the manual workhead joystick forward to raise and squeeze out the respective workhead

5. Place the **TRAVEL/WORK** switch, to the **TRAVEL** position then measure the distance between the tamping tools on both workheads. Refer to figure 4-33.

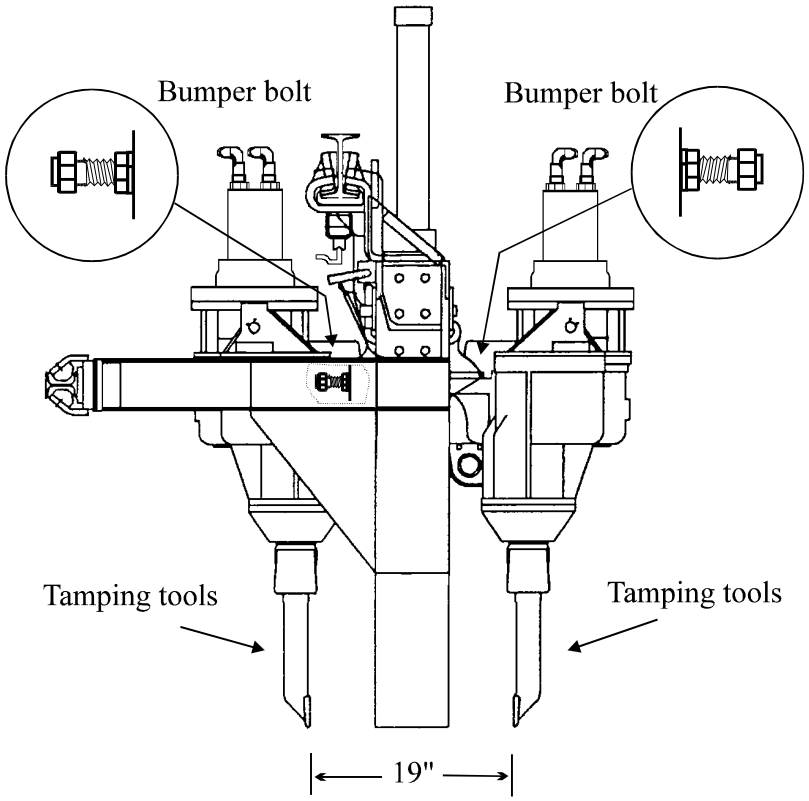

Figure 4-33

6. Place the **TRAVEL/WORK** switch, to the **WORK** Position. Then Press and hold the workhead wizard button while momentarily pushing the left or right workhead joystick in order to squeeze in the desired workheads. Place the **TRAVEL/WORK** switch, to the **TRAVEL** position before making adjustment to the bumper bolts.

7. Loosen the jam nuts on the bumper screws. There are four (4) adjusting bolts on each workhead, two (2) on each side. Refer to figure 4-34.

8. To increase the workhead opening, turn the adjusting bolts clockwise. To decrease the workhead opening, turn the adjusting bolts counterclockwise. Make sure both bolts on the same workhead are adjusted equally.

9. Repeat item 4 thru 9 until the proper distance between the tamping tools is obtained.

10. Tighten the jam nuts on all adjusting bolts.

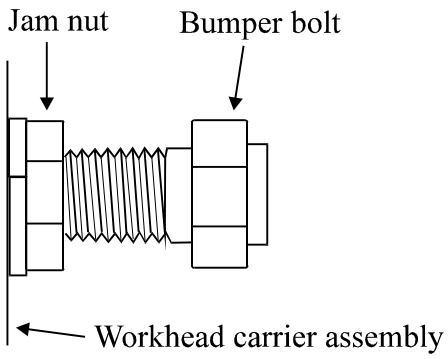

Figure 4-34

Tamp Cycle

The Tamp Cycle consists of three phases:

1) Downfeed
2) Squeeze-In
3) Squeeze Out & Upfeed

Downfeed

When cycle is engaged the selected workheads move downward until they reach their lower string pot setting.

NOTE: *Manual string pots are sometimes called transducers.*

The lower string pot position must be set so the tamping tools will stop at the proper depth in the ballast. The proper depth is when the top of the tamping tools stop approximately ¼" – ½" below the bottom of the tie. Refer to figure 4-35.

If the tamping tools are NOT set deep enough, the tools will squeeze the sides of the tie during the squeeze-in movement instead of underneath the tie. Consequently improper ballast compaction and poor quality tamping will result. Refer to figure 4-36.

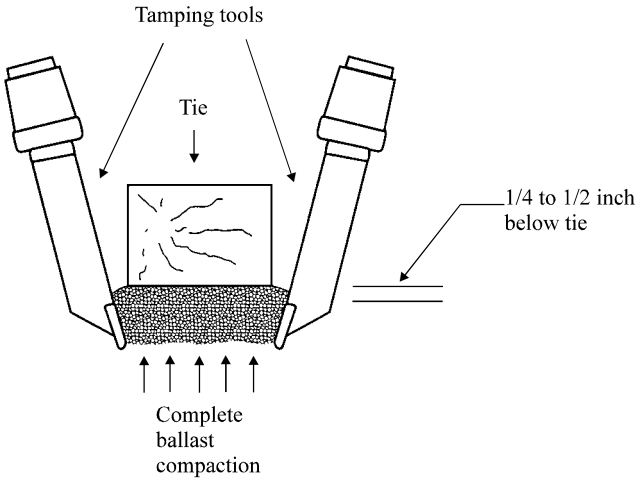

Figure 4-35

If the tamping tools are set too deep, the ballast will flow over the tops of the tamping tools again resulting in poor quality tamping. Refer to figure 4-36.

The main consequence of improperly set transducers, is poor ballast compaction that ultimately affects both surface and crosslevel.

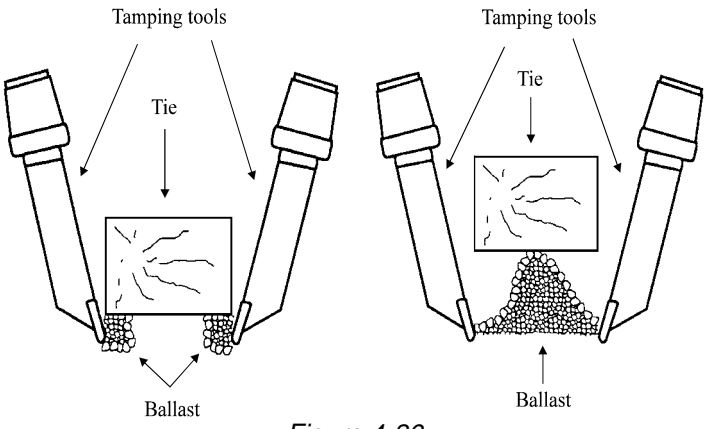

Figure 4-36

NOTE: A quick check is to measure 7 ¼ to 7 ½ inches up from the top of the paddle (blade) for 7 x 9 ties and mark this position on the shank of the tamping tool (i.e., electrical tape/paint etc.). Do the same on all four workheads. Then when tamping observe the mark on the tamping tools, the marks should be at the top of the tie being tamped.

1. When adjustments are complete secure the workheads in their safety (travel) locks.

NOTE: **The lower transducer settings must be adjusted for the size of rail you are working on and must be re-adjusted every time you change rail sizes or tie sizes.**

Setting Lower (Squeeze) Position

When setting the lower (squeeze) position, on the Variable Workhead Depth Control Panel, it is best to adjust one workhead at a time.

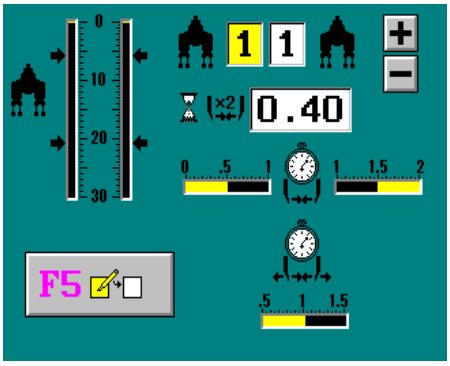

Figure 4-37A

1. Position the machine over a tie to be tamped.
2. Select the F5 key on the second main toolbar to activate the Variable Workhead Depth Control Panel. Refer to 4-37A.
3. Make sure the workhead transducers are calibrated to zero. To calibrate a workhead transducer, simply upfeed the selected workhead until it is in the uppermost position against the workhead carrier by using the workhead joystick. Hold the workhead joystick forward for about five seconds. After five seconds the transducer position will automatically be set to zero. It is necessary to carry out this procedure if a workhead transducer is changed or the “day to day” information saved by the computer is lost.
4. Press the F5 key until the desired workhead lower position arrow is highlighted. Use the plus and minus keys to change the selected workhead depth.
5. Once the lower position arrows are set pressing Enter or ESC will save the settings and exit the panel. For a detailed description refer to chapter 3, F5-Workhead Configuration and Depth Control Panel (second main toolbar set).

Squeeze-In

Once the lower (squeeze) position on the transducers, has been activated, the squeeze in function is started automatically. There are two important factors in the squeeze-in portion of the tamp cycle. Squeeze speed and squeeze pressure.

Adjusting Workhead Squeeze-In Speed

The rate of squeeze-in (squeeze speed) is controlled by adjustable hydraulic flow controls. The flow control valves regulate the speed of squeeze-in to insure tamping is not finished prior to the finish of lifting and/or lining. Refer to figure 4-38.

NOTE: When making adjustment as described below. Ensure that the Squeeze-In Minimum timer is set to 0.5 second and the Maximum timer is set to 2 seconds. Fully close the squeeze-in valves then open the squeeze-in valves two and one half turns (flow control valves are 5 turn valves.).

Procedure:

1. Position workhead over a tie to be tamped.
2. Place the **TRAVEL/WORK** switch, to the **WORK** position.
3. Set the engine throttle to 1000 RPM. Unlock the workheads by pressing the **W/H LOCK** button located on the left keypad.
4. Turn the workheads (vibrator motors) **ON** by pressing the **LEFT and RIGHT W/H ON/OFF**buttons.
5. Increase engine rpm to maximum.

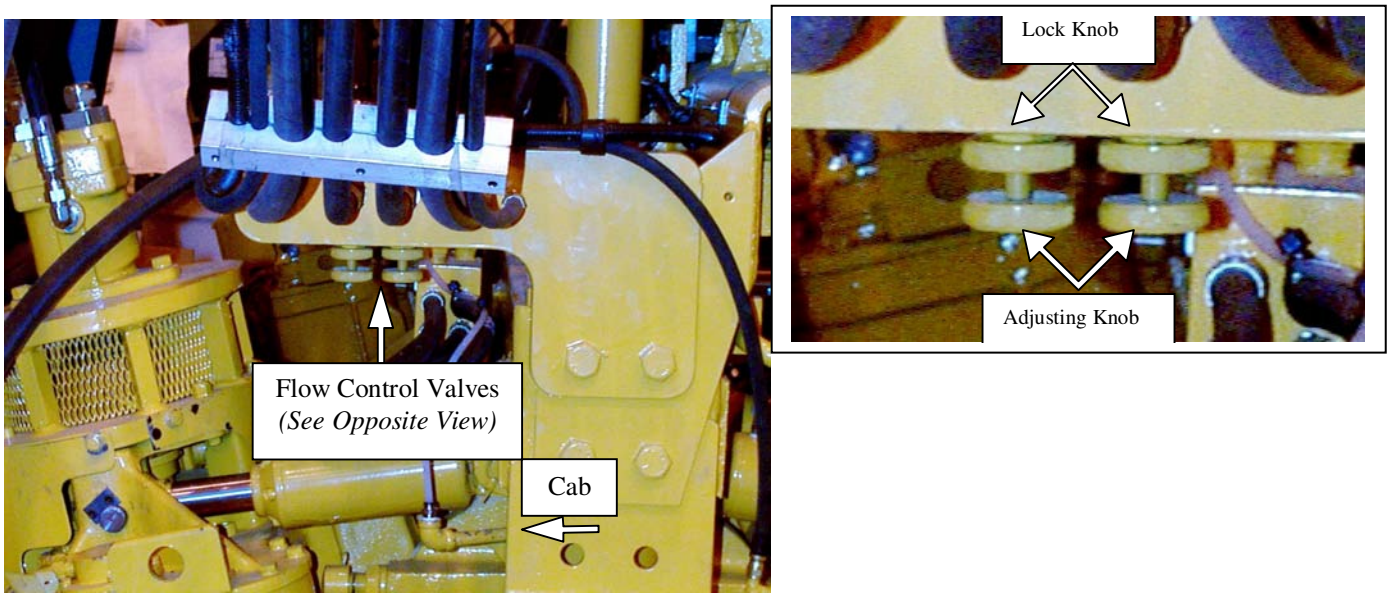

Figure 4-38

6. Downfeed the left workhead and allow it to squeeze, visually observing the speed that it squeezes (about 1.2 sec.).
7. Downfeed the right workhead and allow it to squeeze, visually observing the speed that it squeezes (about 1.2 sec.).
8. Adjust the left and right flow control valves until both heads are squeezing the same speed.
9. Once the flow control valves have been set, if it becomes necessary to slow them down or speed them up, turn each flow control valve exactly the same amount. A good indication of proper setting would be for the squeeze cycle to finish approximately 1 - 1 ½ seconds after the surface lights have gone out.

   In addition to flow control valves, there is a squeeze-in timer. Adjustment of the squeeze time can be done by pressing F5 on the second main tool bar set. When pressed, a workhead configuration dialog box will pop out. Refer to Figure 4-39.

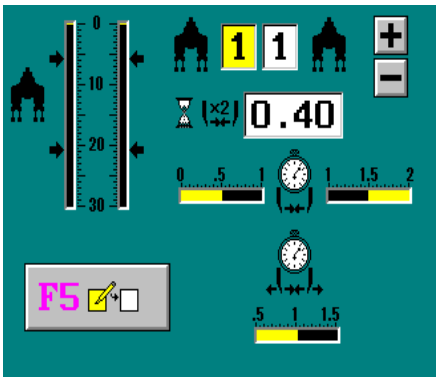

Figure 4-39

Press the F5 button on the workhead configuration dialog box seven times to adjust the minimum squeeze time. Press the F5 button one more time to adjust the maximum squeeze time. Use the plus or minus keys to adjust the time. The time can be adjusted by 0.01, 0.10 and 1 second. For a detailed description see chapter 3, F5 - Workhead Configuration and Depth Control Panel (second main toolbar set).

The minimum squeeze time determines the minimum time squeeze pressure will be sustained even when the desired squeeze pressure is reached. The maximum squeeze time is the time the squeeze pressure will be released regardless of whether or not desired squeeze pressure is reached.

Squeeze Pressure

Proper adjustment of the squeeze pressure transducer is very important in order to achieve quality tamping. The proper setting for the squeeze pressure transducer on the MKIV is between 1200 - 1600 PSI. If the pressure needs to be adjusted follow the recommended procedure described below.

NOTE: When making adjustment as described below. Ensure that the Squeeze-In Minimum timer is set to 0.5 second and the Maximum timer is set to 2 seconds.

Procedure:

Go to the workhead / clamp frame diagnostic screen (2nd main toolbar, F2 then F-1). Adjust the squeeze pressure transducer to 1200 P.S.I by using the plus/minus keys. Refer to figure 4-49.

NOTE: If the machine is working in an area where the ballast is extremely cemented or foul, it may be necessary to either increase the squeeze pressure transducer setting (maximum 1600 psi) or use the squeeze sustain feature. If you increase the squeeze pressure transducer setting, be sure to return the transducer setting to its original value as soon as the machine is out of these adverse conditions.

After completing the adjustment raise the workheads to their up and locked position. Ensure that the brakes are properly applied, place TRAVEL/WORK switch to the TRAVEL position, idle the engine for a minimum of 2 ½ minutes before shutting down.

Remember: The squeeze-in flow controls are used to coordinate tamping and jacking, whereas squeeze pressure controls the amount of pressure being applied under the tie.

Upfeed and Squeeze-Out

Once the squeeze pressure transducer setting has been activated, squeeze-out and upfeed will begin. The upper transducer (standby) position, controls the height of the workheads and are adjustable for varying conditions. Under normal conditions the height of the workheads should be set so that the tamping tools clear the ties by approximately 2-3 inches.

Setting Upper (Standby) Position (For models with transducers)

When setting the upper (standby) position, on the Variable Workhead Depth Control Panel, it is best to adjust one workhead at a time.

1. Select the F5 key on the second main toolbar to activate the Variable Workhead Depth Control Panel. Refer to figure 4-37A.
2. Make sure the workhead transducers are calibrated to zero. To calibrate a workhead transducer, simply upfeed the selected workhead until it is in the uppermost position against the workhead carrier by using the workhead joystick. Hold the workhead joystick forward for about five seconds. After five seconds the transducer position will automatically be set to zero. It is necessary to carry out this procedure if a workhead transducer is changed or the “day to day” information saved by the computer is lost.
3. Press the F5 key until the desired workhead upper (standby) position arrow is highlighted. Use the plus and minus keys to change the selected workhead height.
4. Once the upper position arrow is set press ESC to save the settings and exit the panel.

NOTE: There are two high positions for each workhead. High positions are independent for switch mode and production mode. When in switch mode, it is recommended that the high positions be set so that the workheads clear the top of the rail. This allows the workheads to be traversed without upfeeding beforehand which can save a lot of time when tamping a switch.

The switch mode key on the left hand keypad can be used to toggle between switch mode and production mode while the workhead panel is open which makes it easy to see and change each of the possible high positions.

Squeeze-Out

The speed of squeeze-out is adjustable by flow control valves located above the rear workheads. Refer to 4-38. These should be adjusted equally, **not wide open**, to prevent the workheads from breaking the workhead bumper bolts. NOTE: Usually 1 ½ turns in from fully open.

Tamping Tools

Although tamping tools would not be considered an adjustment, they have a great impact on the quality of track being tamped.

Tamping tools should be kept tight and in good condition. If all of the above adjustments were set properly, and the tamping tools were worn out, the quality of track being produced would not be acceptable.

Once the tamping tools have between 20% and 30% wear, the quality of track being produced starts to drop off drastically. Therefore, maintaining good quality tamping tools is very critical to properly tamped track. Refer to figure 4-41.

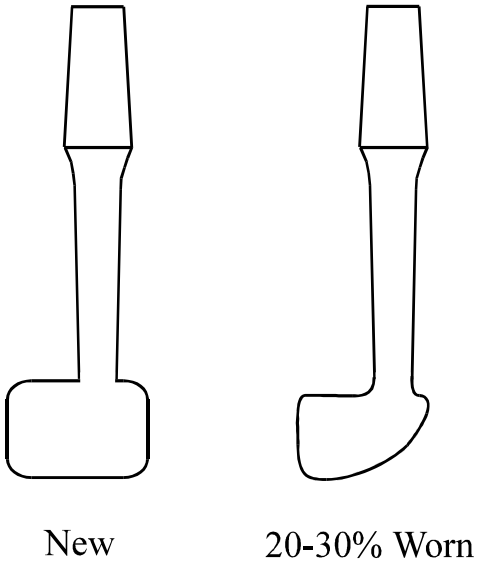

Figure 4-41

In summary, if your tamper is not producing quality track, it may require a "tune up". All of the above adjustments and procedures should be reviewed to insure the machine is capable of putting up quality track.

There are a number of other conditions that have not been mentioned but could have an effect on the quality of track being produced.

Track Conditions

If the machine is properly adjusted, and in good working order, yet the quality of track being produced is unacceptable, there are a number of other factors that should be considered.

Track conditions play a big part in the final outcome of newly surfaced track. For example, if the track does not have enough ballast to handle the amount of lift being made, then, no matter how well a tamping machine is adjusted, the track will not hold up.

Listed below are a number of conditions that would prevent a machine from doing a good job.

1. Lack of Ballast
2 Foul or Muddy Ballast
3. Bad Ties
4. Surface Bent Rail

Double Tamping

The number of tamps per tie is a question that is frequently brought up and a good point to consider.

Normally, if a machine is tuned up properly, and the track conditions are average, single tamping should be sufficient.

- If the ballast is extremely foul or cemented, double tamping may be required to carry enough ballast under the tie to properly support the track.
- If the raise is over 2", double tamping may be necessary to properly compact the ballast under the ties.

Center Bound Track.

Under normal conditions it is desirable to have a void under the center area of the tie. See figure 4-42.

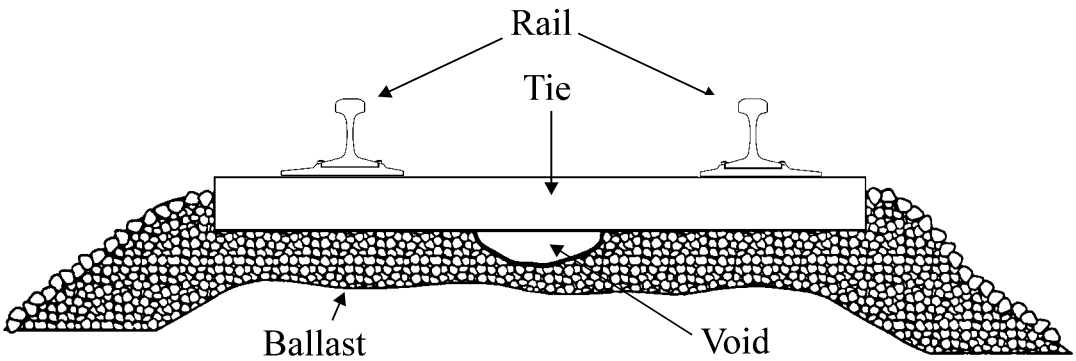

Figure 4-42

Center Bound Track is a condition where the ballast is compacted underneath for the full length of the tie. Once train traffic starts to move over this condition, the trains will actually "tamp" or settle the ballast under the rail area, but not the center of the tie. This will result in a "teeter totter" action resulting in damaged and broken ties. See figure 4-43. Therefore, it must be understood, that we may be able to tamp "too good".

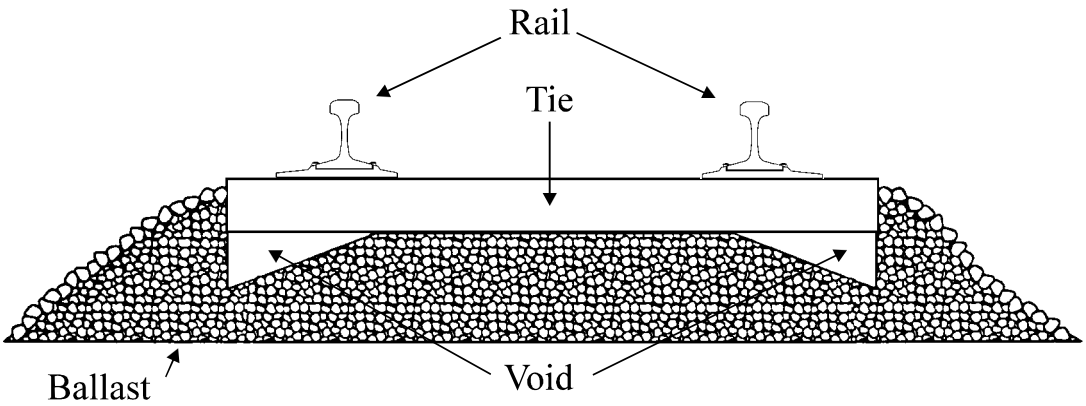

Figure 4-43

Combo Clamp Frame

The combo clamp frame is a multi-purpose rail lifting assembly capable of clamping and jacking the rails in both production and switch modes. See figure 4-44.

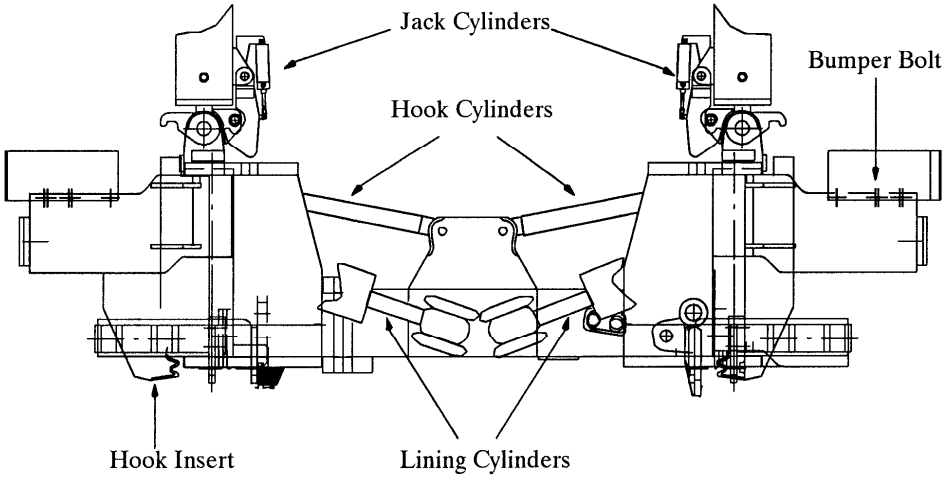

Figure 4-44

Theory of Operation

Jacking

When CYCLE is engaged, the left and right hook-in valves are energized which supply oil to the hook cylinders. The hook cylinders retract the hooks (hook-in) until the hook bumper bolts strike the hook frame. The clamp frame bias cylinder and pad assembly, located on the lower portion of the clamp frame between the rails, simultaneously extends to prevent the rail from tipping.

When the hook pressure transducer setting is reached, the two (2) pressure switch transducers will indicate to the computer that the hooks are in position and ready for the jacking sequence. The computer then starts the jacking and lining operations.

Jack Release

Once the line operation is complete the jack down valves are energized and the hooks are lowered to the lower limit switches. When the lower limit switches are made the hook out valves are energized and the hook cylinders extend the hooks until they contact the hook outer limit switches. During the hook down and out sequence the bias valve de-energizes and the bias cylinder is retracted (down and out sequence).

If the hook should slip off the rail during the jacking process the hook frame will rise until it contacts the upper limit switch. If the upper limit switch is contacted during the jacking cycle the computer will automatically abort jacking and start the hook down and out sequence in production mode.

Before work can be carried out using the “combo frame” There are certain adjustments which must be performed.

Adjustments

Before making any adjustments, place the WORK/TRAVEL switch in the TRAVEL mode. Failure to do so could result in unintended movement of the machine or work components. START AND END WITH THE SPRING PARKING CONTROL BRAKE IN THE “APPLIED” POSITION (Push In the push/pull knob) AND **THE TRAVEL/SERVICE HAND BRAKE LEVER IN THE “RELEASED” POSITION** (push lever forward (toward front of seat)). Parking Brake is also commonly referred to as the MAXI BRAKE CONTROL.

Combo Clamp Frame Lower Limit Switches

Procedure:

1. Place the **WORK /TRAVEL** switch, to the **WORK** position.

2. Move the joysticks (manual hook control levers) on the left and right console panels to the **UP** position to raise the combo clamp frame up in the travel locks.

3. Release the combo clamp frame travel locks by pushing the combo clamp frame lock push button on the left keypad.

4. Move the joysticks (manual hook control levers) on the right and left console control panels, to the **DOWN** position. The jack cylinders will extend and the clamp assembly will move down onto the top of the rails.

5. If misalignment occurs, use the manual line left/right controls on the left keypad to center the clamp frame between the rails.

6. Once the combo clamp frame reaches the top of the rail, the hook assemblies are lowered to a point set by the position of the lower limit switches.

7. With the hook frame resting at the lower limit switch there should be approximately ½ inch clearance between the top of the hook insert and the bottom of the rail-head. See figure 4-45.

8. Adjust as necessary. Loosen the two (2) mounting screws and raise or lower the limit switch until the desired clearance is achieved.

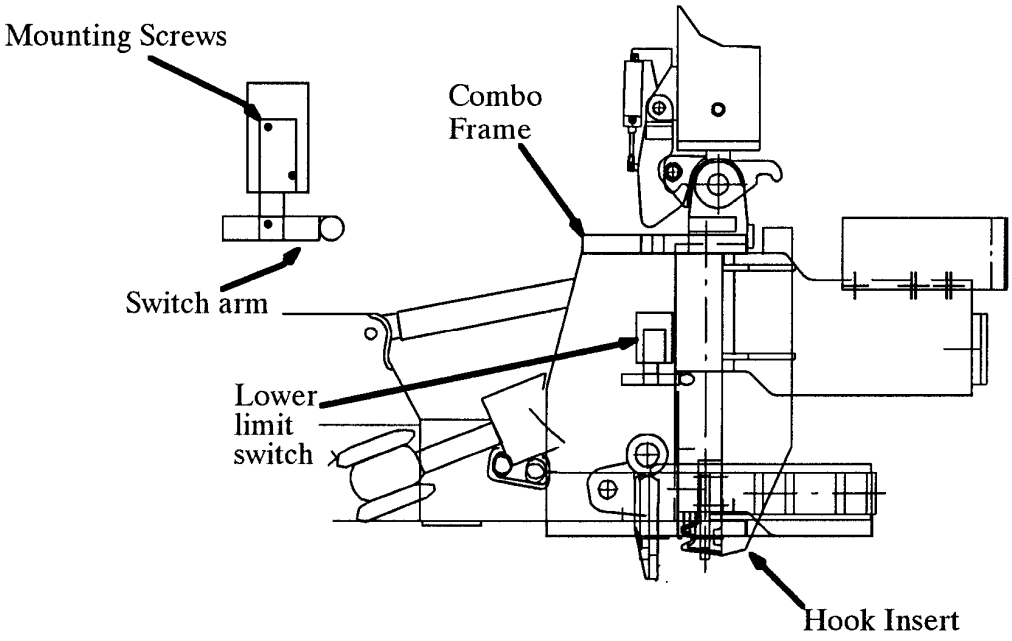

Figure 4-45

Combo Frame Outer Limit Switches

The outer limit switches are set to allow the hooks to clear any normal obstruction from the side of the rail such as joint bar bolts.

Procedure:

1. Measure from the web of the rail to the outermost normal obstruction that will be encountered. The most normal obstruction encountered will be joint bar bolts.
2. Manually extend the left and right hooks out until they stop at the outer limit switch.
3. Measure from the outside edge of the hook insert to the web of the rail. This measurement should exceed the measurement from step 1 by ½ inch. Refer to figure 4-46.
4. Adjust as necessary. Loosen the two (2) mounting screws and slide the limit switch horizontally.

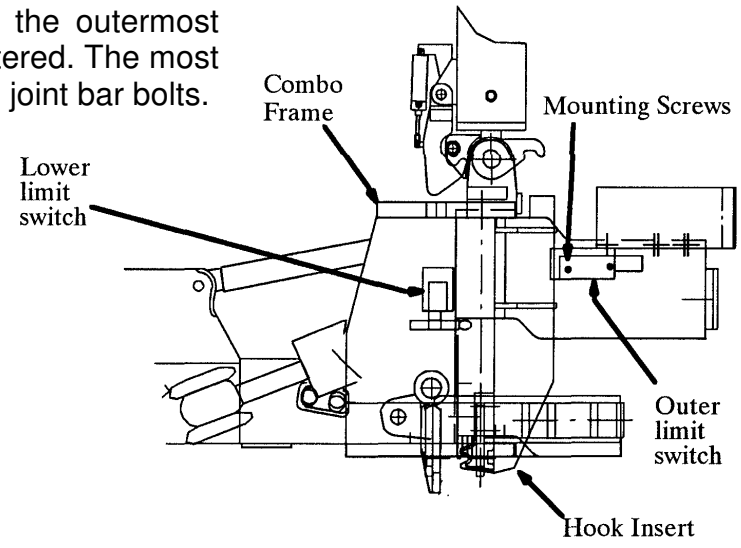

5. Tighten the mounting screws and repeat step 3. Readjust if necessary until the desired clearance is achieved.

Combo Clamp Frame Upper Limit Switches

The upper limit switches prevent the hook assembly from lifting the combo frame off the rail in the event the hooks slip during jacking. Refer to Figure 4-47.

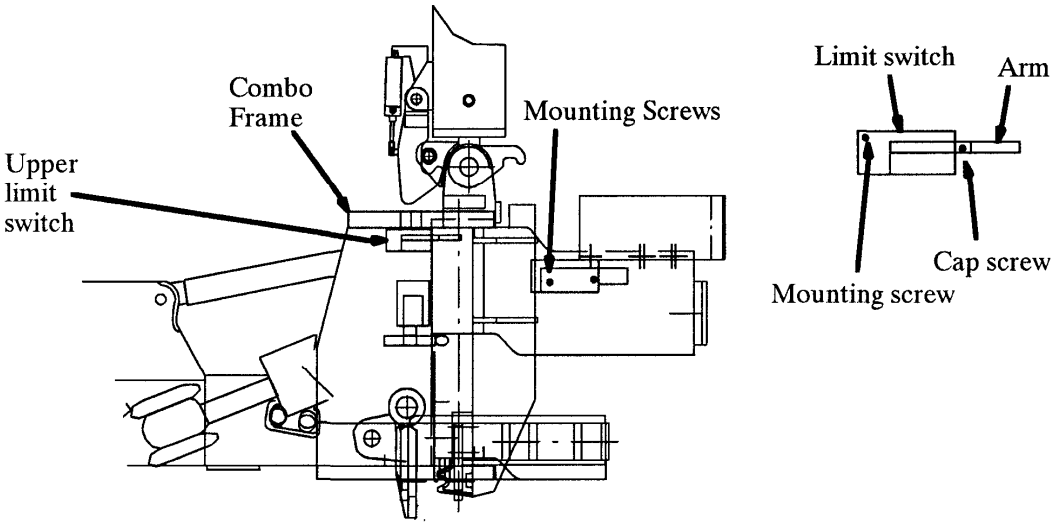

Figure 4-47

Procedure:

1. Move the joysticks (manual hook control levers) on the left and right console panels to the **UP** position to raise the hook assembly up.

2. If the clamp frame is lifted off the rail before the hook assembly stops at the upper limit switch it will be necessary to re-adjust the switch.

NOTE: The hook frame should stop approximately 1 inch from the top of the clamp frame guide rods.

3. Adjust as necessary. Loosen the setscrew on the limit switch arm and turn the arm to the desired position.

4. Tighten the setscrew and repeat step 2. Readjust if necessary until the desired clearance is achieved.

Bumper Bolts

In most circumstances it is undesirable to mark or strike the rail in any fashion. To prevent the hooks from contacting the rail the clamp frame incorporates adjustable bumper bolts.

Procedure:

1. Move the joysticks (manual hook control levers) on the right and left console control panels, to the **DOWN** position until the hook assembly is resting on the lower limit switches.

2. Press the Autojack button located on the L/H arm panel.

   Pressing the Autojack button will cause the left and right hooks to move laterally in towards the rail until they contact the bumper bolts. The Bias cylinder will also automatically extend the bias plate until it contacts the rail.

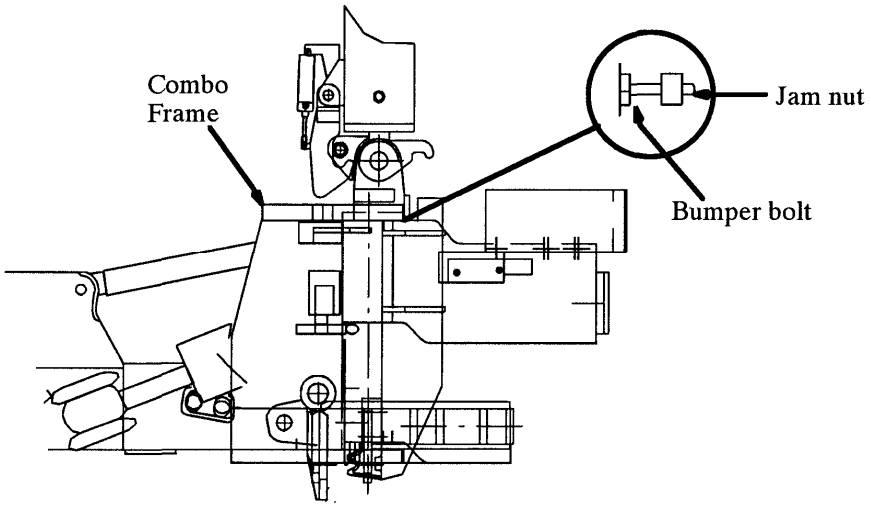

Figure 4-48

3. Visually observe the distance the hook inserts stop from the rail. Ideally there should be a 1/8 inch gap between the hook insert and the web of the rail. This will vary slightly due to variations in the track gauge. Refer to Figure 4-48.

4. If the hook insert strikes the rail it will be necessary to turn the bumper bolt out toward the clamp frame. If the gap between the hook insert and the rail is greater than 1/8 inch it will be necessary to turn the bumper bolt in.

5. Loosen the bumper bolt jam nut and adjust the bumper bolts as necessary.

Hook Pressure Transducers

The left and right hook pressure transducers are used to signal the computer that the hooks are ready and the jacking cycle can begin.

During normal PRODUCTION mode operation when the operator initiates cycle the left and right hooks move in towards the rail until they contact the bumper bolts. Pressure in the hook cylinders build up to the setting of the pressure transducers that complete an input circuit to the computer.

The computer scans the switches and when it receives an input from the left and right hook pressure transducers jacking will begin. The normal hook pressure transducer setting is approximately 800-1000 PSI. If high ballast conditions exist it may be necessary to raise the hook pressure to approximately 1500 PSI in order to displace the ballast trapped between the hook insert and the web of the rail.

Procedure:

1. Go to the workhead / clamp frame diagnostic menu by pressing Enter from the main screen then F2 to get into Diagnostics. Press F1 to get into the workhead / clamp frame diagnostic screen. Highlight the hook pressure transducer icon by pressing F5 until the highlighted arrow is lit by the transducer that need be changed and set to the recommended pressure by using the plus / minus keys.

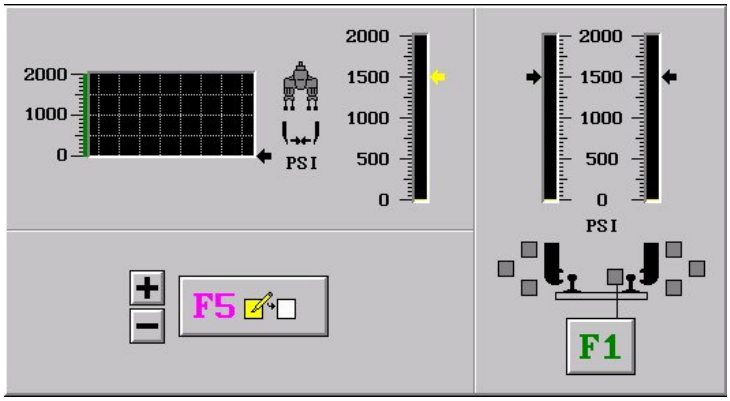

Figure 4-49

Setting-Up the Machine for Work

Procedure:

1. Read "*Safety*" Section 1 in this manual, before you continue with this procedure. Refer to Section 2 for Control Panel details.

2. Upon arriving at the work site stop the machine, lower the engine throttle to 1000 rpm and set the spring applied parking brake and release the travel/service brake. Place the **TRAVEL/WORK** switch to the **TRAVEL** position. Refer to figure 4-50

Figure 4-50

3. When loading or unloading the projector buggy and pusher bars the **P2 MANUAL PUMP** push button will be used to energize the P2 pump (manual pump push button is located on the right front corner of the machine). Refer to figure 4-51

4. **The surfacing & lining buggy system must be unloaded into the work position with the machine located on tangent track.**

Setup – Buggies (*Refer to Appendix*

1. Take the lining projector from the cab and proceed to the front of the machine, raise the projector buggy lift mechanism by turning the valve handle to the RAISE position and pressing the manual pump push button. Release the lift frame lock.

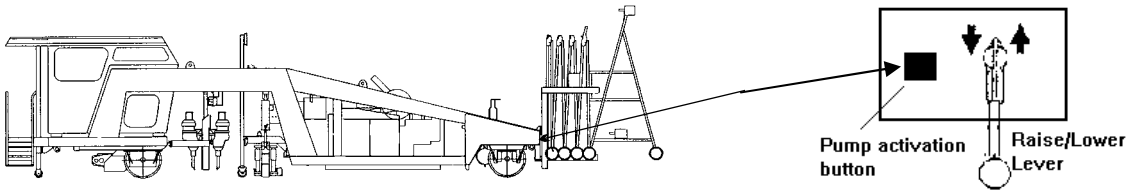

Figure 4-51

2. Once the buggy lock is released lower the buggy frame to the rail by turning the hydraulic selector valve to the lower position. Install liner projector.

All buggies must have their safety locks securely in place before attempting to unfold the buggy system. Failure to do so could result in bodily injury. Refer to Appendix B for detail instructions concerning the operation of the buggy locks and the deployment and storing of the pusher bars and buggies .

Keep hands and fingers clear of all pinch points. All pinch points are clearly defined or painted red.

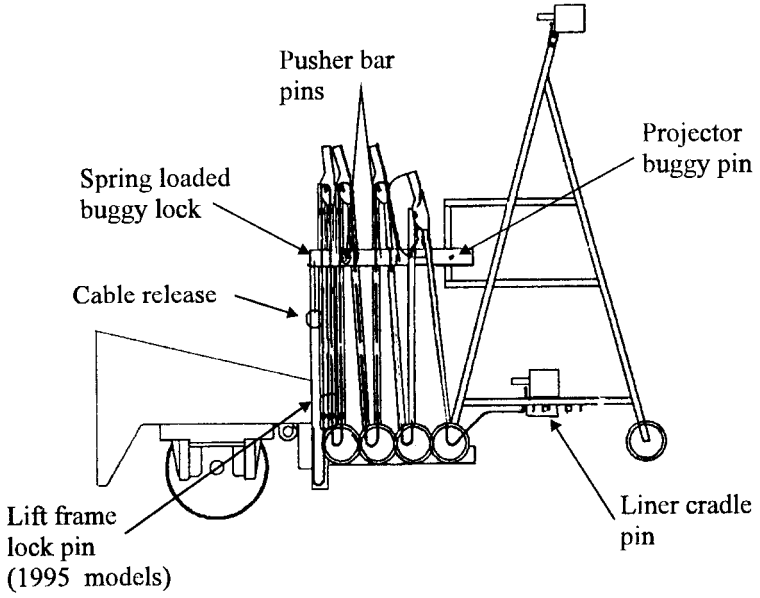

Figure 4-52.

3. Remove the projector lock pin and slowly push the projector buggy away from the machine to unfold the 1st pusher bar. Refer to figure 4-52.

4. Remove the lock pin from the 2nd pusher bar and slowly push the buggies away from the machine in order to unfold the 2nd pusher bar.

5. Remove the lock pin from the 3rd pusher bar, release the spring loaded pusher bar lock and slowly push the buggies away from the machine until the 3rd pusher bar is fully extended.

6. Place the pusher bar work locks into the pusher bars and secure with the hitch pin. Insure the bias springs are biased to the correct rail (away from the projector).

7. Raise the buggy frame by turning the hydraulic selector valve to the raise position and press the manual pump button. Secure the buggy lift frame with the safety lock.

8. Raise the surfacing shadowboard out of its safety lock by turning the air valve switch to the raise position. Release the shadowboard lock and lower the shadowboard to the rail. Remove the liner locks pins and manually lower the liner shadowboard to the working or horizontal position.

9. Move liner light shield from its travel position, against the side of the machine, to its work position perpendicular to the machine. The light shields, located on the sides of the machine opposite the lower side glass of the cab, are used to prevent the light emitted from the surfacing projector from entering the lining receiver.

10. Raise the receiver buggy out of its safety lock by turning the air valve switch to the raise position. Release the air actuated safety lock and lower the receiver buggy to the rail. Lower liner receiver to work position.

11. Return to the cab of the machine. Place the **TRAVEL/WORK** switch to the **WORK** position and set the machine parameters for work.

Setup - Machine Parameters

1. The warm up function should be OFF.

   - Press F5, on the First Main Toolbar, to Change Options
   - Use the plus or minus buttons to highlight warm up
   - Press F5 to turn OFF, then ENTER or ESC to return to the main toolbar set

NOTE: Whatever option was previously turned on will still be highlighted, therefore, all that is required is to press F5 on the main screen, then F5 on the options screen, which will turn ON/OFF that option.

2. Scan the information or status boxes on the screen to see what parameters are set.

   - P1 & P2 pumps ON
   - Tamps per cycle
   - Auto Traction
   - Squeeze Waits
   - Switch Mode
   - Clamp Pressure Sustain
   - Surface and line reference

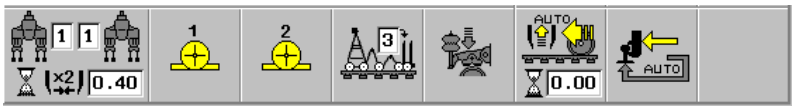

Figure 4-53

NOTE: For more information or help regarding setting options or key function refer to section 3. SOFTWARE GUIDE.

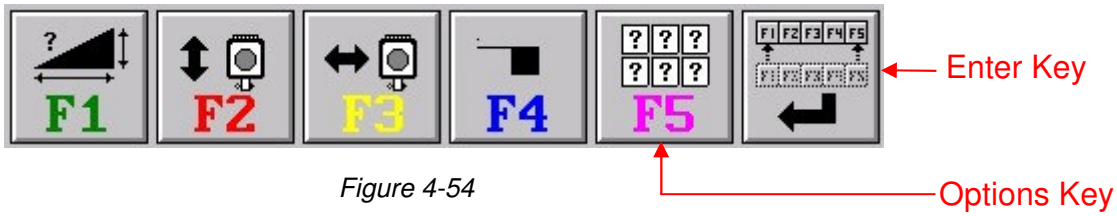

Figure 4-54

3. Pressing ENTER access' each of the toolbars. Set options as required.

   A) Press F1-Set Distance & Mile Post on the Second Main Toolbar to access the distance and milepost panel. If the distance panel is highlighted, press F2 to zero this panel. Press F1 again to move the highlighted area to the accumulated footage panel, press F2 to zero this footage. Press F1 to highlight the milepost panel. Use the plus (+) or minus (-) key to set the milepost setting. Press F3, if necessary, to have the milepost ascending or descending.

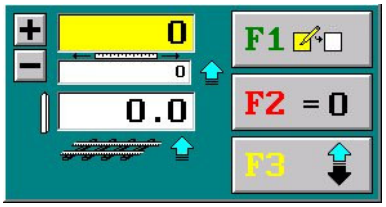

Figure 4-55

NOTE: The F2-Wipe will clear all track parameter and sets the starting footage to zero feet .It does not reset the accumulative footage to zero. This will need to be set from the distance and milepost toolbar. The PC keyboard can be used to enter the mile post numbers.

B) Press F4-Reference Change on the First Main Toolbar to access the reference rail panel (figure 4-56A). From this panel pressing F1 will select the reference rail for lining.

Pressing F3 (figure 4-56A) selects Auto Surfacing where the computer automatically selects reference rail for surfacing and pressing F3 again sets the track centerline as the reference for surfacing.

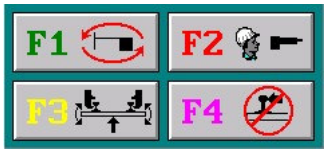

Figure 4-56A

C) Press F1- Projector Buggy Distance & Pusher Bars on the Third Main Toolbar (see figure 4-56B) to select the number of pusher bars deployed.

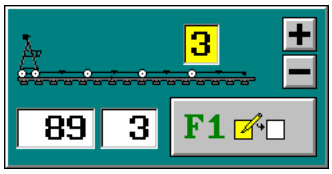

Figure 4-56B

NOTE: The number of pusher bars deployed **must equal** the number of pusher bars selected.

D) Press F3-Insertion & Production Count on the Third Main Toolbar to open the production and switch counts panel. To reset the daily counts to zero, press F1 resets production and F2 resets switch counts.

Figure 4-57

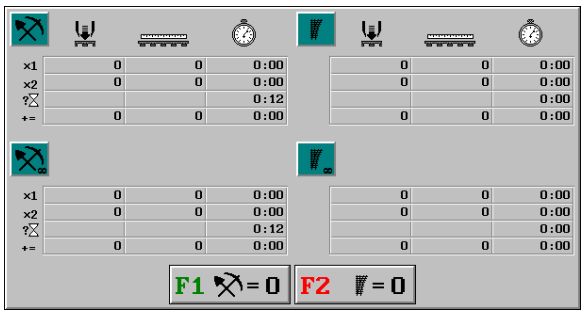

Figure 4-58

E) Press F2-Surface Projector ON/OFF on the First Main Toolbar to enable the surfacing system. The projector emblem will be red if activated, or gray, not activated. Turning this projector ON enables the surface projector, lifting system and sets the surfacing actuators to their zero position.

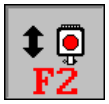

F) Press F3-Line Projector ON/OFF on the First Main Toolbar to enable the Lining system. The projector emblem will be red if activated, or gray, not activated. Turning this projector ON enables the lining projector, lining system and sets the lining actuator to it's zero position.

G) Move the machine to the first tie to be tamped (at least 5 ft.); this will also allow the liner gauge wheels to properly bias to the reference rail.

H) Clear any existing track, track recording or fit, by using the F2-Wipe button. The F2-Wipe button is located on the third main toolbar button set.

4. Press F5-Work Start/Stop/Resume on the Third Main Toolbar to open the Work Start/Stop/Resume Panel. Press F1-"Find the Lights" on the Work Start/Stop/Resume Panel to initiate the hunting of the surface and line light beams. When the surface and line lights start to blink wait about 5 seconds, then press the ENTER key to set up the ramps for surface, crosslevel and line (defaults ramps) or press ESC to return to the Work Start/Stop/Resume Panel. This work setup procedure is typically used when setting up the machine prior to commencing work. This procedure is sometimes known as "finding the lights". When this procedure is complete, control points will be set such that the first tie to be tamped will not be lifted, lined or changed in superelevation. The machine is now ready to commence work.

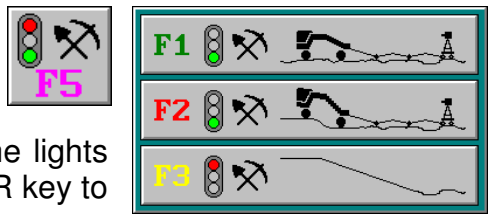

Figure 4-59

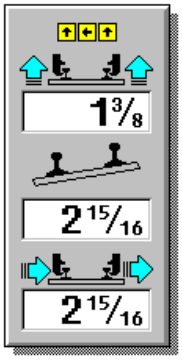

Figure 4-60

NOTE: Once zero setup has been selected, the popout information panel will appear showing lift, superelevation and line at the shadowboard determined from current beam position and the inclinometer reading. If the values displayed on this panel are large, it may be desirable to move the machine slightly (if possible) before pressing ENTER.

OTHER SETUP or ADJUSTMENT OPTIONS:

A) If it is desired to setup on, and tamp track without recording it, first clear the existing recording and fit (if any) using the curve wipe toolbar button in the third main toolbar set and use the manual change procedures to set the required lift, superelevation and curvature for the track to be tamped. On tangent track, it is only necessary to set the required value of surface.

Before selecting this function, ensure the reference systems are deployed, properly registering against the rails and that both projectors are on (unless lifting or lining is intentionally disabled). If the distance displayed at the top left of the screen needs changing to match the footage of the starting location (recorded track only) change it now. Best results are achieved when recording starts about fifteen feet before the intended start of work location.

Once zero setup has been selected, the popout information panel will appear showing lift, superelevation and line at the shadowboard determined from current beam position and the inclinometer reading. For lift and line, these are the pulls that would have resulted if a cycle were to be initiated at the current location without "finding the lights".

When the ENTER key is pressed, hunting of the beam will stop and the actuators will be positioned at the point of cutoff. If ESC is pressed, the procedure will be aborted and the actuators will be returned to their original positions. If the values displayed on this panel are large, it may be desirable to move the machine slightly (if possible) before pressing ENTER.

Appropriate work-in rates will be applied to the operating parameters from the current location. Subsequent manual changes will probably not be necessary and the machine is ready to begin work.

B) Press the Expanded Track View Screen key (magnifying glass) to get to the first toolbar button set of the expanded track view screen. The first four buttons selects a parameter for control.

- Press F1 for Surface
- Press F2 for Throws
- Press F3 for Superelevation
- Press F4 for Line
- Press F5 to toggle between a compressed view and the standard Expanded Track view.

As soon as a parameter has been selected by pressing F1, F2, F3 or F4 in this toolbar button set, the appropriate dialog box will open and the selected parameter will be in rubber banding mode. While in this mode, the interpretation of the keys in the upper half of the right keypad will be different until the rubber banding mode is terminated by pressing the ENTER or ESC key.

Note: Although parameters can be accessed in any sequence, changing some will impact others. Changing superelevation will influence the surface fit. Changing the best fit for line will change the fit for superelevation and so on. It is therefore strongly recommended that a particular sequence of parameters be followed when changes are to be made. That sequence is: LINE, SUPERELEVATION, THROWS and finally SURFACE (skipping over any that do not need changing). Note that for consistency with the rest of this manual, the following sections will not appear in this sequence.

<u>Rubber Banding</u>

To avoid repetition, some general terms, concepts and keypad usage that apply to rubber banding will be described in this section.

For each parameter, control is applied through a sequence of control points. The variation of control between control points is assumed to change in a straight line from one point to the next. If you imagine an elastic or rubber band stretched between the control points, then you have a clear picture of what happens to control at intervening points when any one point is moved.

When a parameter is selected for modification, a target or cursor is positioned at the current location. The “corporal” keys jump (or snap) the target between the available control points. Using any of the up, down, left or right cursor keys on the right keypad will “drag” the selected control point in the direction of the arrow on the key. While in the rubber banding mode, a dialog box adjacent to the parameter being modified will be open showing details of the control point currently selected. When a control point is dragged, the numerical effect is immediately shown on this panel.

Pressing the plus / minus (+/-) keys will move the target or cursor along a “rubber band line” *between* two control points, at a rate of one foot per press. Holding one of these keys down will auto-repeat to move the cursor continuously. If BOTH the plus and minus keys are held down together, the cursor will move at an accelerated rate (in the direction first selected) to allow any track location to be selected quickly. When the target has been placed between control points in this manner, using an up/down/left/right key will *create* a control point at the selected track location.

The operator simply continues to use the cursor keys until the newly created control point is positioned appropriately. This is the method of inserting control points.

When a control point is dragged to or beyond another control point, the two points will be combined.

Pressing the ESC key exits the rubber banding mode and *discards* any changes that have been made. Pressing the ENTER key exits the rubber banding mode and retains any changes made. Either way, the cursor keys revert to their normal function of providing manual control over lift, line and superelevation.

After pre-recording a given distance track (up to 12,000ft. allowed at this time) return to the point where recording was started. Set line, superelevation, throws and surface parameters. The machine is now ready to surface and line track.

Working

With the lift, cross level and line parameters now set we are ready to begin surfacing track.

1. Move the joysticks (manual hook control levers) on the left and right console panels to the **UP** position to raise the combo clamp frame up in the travel locks.
2. Release the combo clamp frame travel locks by pushing the lock release push button located on the left arm panel keypad.
3. Move the joysticks (manual hook control levers) on the right and left console control panels, to the **DOWN** position. The jack cylinders will extend and the clamp assembly will move down onto the top of the rails. If misalignment occurs, use the manual line left/right controls on the left keypad to center the clamp frame between the rails.
4. Unlock the workheads by pressing the **W/H LOCK** button located on the L/H arm panel keypad.
5. Turn the left and right workheads (vibrator motor) **ON** by pressing the **LEFT** and **RIGHT W/H ON/OFF** buttons (orange).
6. Increase engine rpm to maximum.
7. Locate the machine (workheads) over the first tie to be tamped.

NOTE: It is always best to test the jacking & lining before actually tamping the track by first using the **MANUAL JACK** to **CUT-OFF** push button located on the L/H operator key pad (L/H arm console). The **MAUNAL JACK RELEASE** will reset the jacking & lining system.

8. Initiate CYCLE by depressing the floor cycle switch located on the footrest of the operator's seat or by pulling back on the cycle joystick located on the R/H arm panel.

NOTE: When in Autocycle the cycle foot pedal or joystick would be held until the machine is located over the next tie.

9. The machine will jack, line and tamp the track simultaneously, then automatically index forward until the cycle switch used is released. Reactivating one of the cycle switches restarts the tamping, jacking and lining cycle.

Use the manual lift, elevation and line shift buttons located on the right-hand arm panel keypad to make adjustments to the lift, elevation and line as required. Refer to section 2 for keypad information.

Smart Cycle

Where tie spacing permits, this feature automates the task of ending forward traction and starting the next cycle. At all times, the software monitors tie spacing, the rate of deceleration between the end of traction and the start of cycle, the forward speed of the machine at the start of cycle and the distance taken to stop the machine after start of cycle. When activated by the operator, the software takes over the task of tamping and will continue tamping ties automatically **while cycle is held**.

Prior to this feature, the workhead and clamp frame joysticks were inactive during cycle. These are now used during cycle to control smart cycle in an intuitive and natural manner. Anytime during an operator initiated cycle, moving either workhead joystick forward or rearward will activate smart cycle. Smart cycle will remain active, moving the machine and tamping ties until the operator releases cycle. The operator can apply corrections using the workhead joysticks so as to maintain accurate positioning in relation to the ties. Each time a workhead joystick is moved rearward, the target position for the next tie is moved back (short) by two inches. Each time a workhead joystick is moved forward, the target position for the next tie is moved forward (long) by two inches.

The clamp frame joysticks are used during smart cycle to control the forward speed of the machine at the time the work-heads begin downward movement. Moving either clamp joystick forward will increase speed by an increment. Moving a clamp joystick rearward will cause the machine to be traveling slower when the workheads enter the ballast.

At maximum speed, smart cycle can simultaneously initiate the workheads cycle and terminate traction. A good operator will take at least a tenth of a second to do this (releasing and reapplying cycle). Over the course of an hour, this small difference will amount to an additional 20 to 30 ties being tamped based on speed alone. However the greatest gains in production are from reduced interruption to tamping now that a lower level of concentration is required to maintain proper position in relation to ties. When tamping every second or third tie, adjustment of speed will be more important.

Smart cycle reduces the level of stress and fatigue. Continuously holding cycle by keeping the foot pedal down (or cycle lever pulled) results in less discomfort over a period of time than the repetitive motion needed for manual control. An operator can improve comfort even further by changing from pedal to joystick to improve circulation. By overlapping when changing from one to the other, smart cycle will continue uninterrupted. When working manually, an operator has a strong preference (foot pedal or cycle joystick) and is less likely to do this.

NOTES: Whenever the tie spacing or conditions vary significantly, tamp five or six ties cleanly[1] in manual mode before invoking smart cycle.

Left, right or both joysticks can be used to control smart cycle. If both joysticks are used together, they will have twice the effect of one (4 inches for cycle spacing and double the normal speed increment for the clamp joysticks).

Tie spacing corrections (work-head joysticks) can be made at any time and will affect the next tie to be tamped up until the work-heads begin downward.

Releasing cycle at any time will cancel the automatic mode of smart cycle. Subsequent tamping will be purely manual until a work-head joystick is again moved forward or backward during cycle.

The auto underfoot-lifting option can be used while smart cycle is active. For this feature to be useful, it will be necessary to position the clamp frame between ties. It will take some effort to overcome the habit of releasing cycle in response to a damp hook slipping off (which would cancel smart cycle as well as aborting cycle).

When smart cycle is activated, the average forward speed over the preceding five ties is used to establish the desired forward speed at start of cycle. This value will remain unchanged once smart cycle is active unless a clamp joystick is moved forward or rearward. When tamping every tie, this speed should be a maximum. If it is not, move either clamp joystick forward.

Clamp Hook Out

In or near switches or turnouts, it is at times desirable to have either or both clamp hooks run to the outermost position beyond the outer limit switch at the end of cycle. This prevents the hooks from fouling wider track components in the switch area.

To activate this feature, simply run the hook out past the outer switch prior to cycle. At the end of cycle, the hook will run past the outer switch and return to the full outer position (or until auto-jack-release is released during switch mode). This mode will remain active until the clamp joystick is used to position the hook on the outer switch in an outward direction. This will cancel the feature and the hook will stop out feeding past the limit switch. Using the clamp joysticks to control this feature is fast, simple and intuitive while not adding to screen or menu complexity.

As the machine does not have to be in switch mode to use this feature, more of a switch or turnout can be tamped with the benefit of auto-traction thereby saving considerable time.

Clamp Hook Digging

If the clamp hook is being moved down using the joystick and the lower switch is made for more than a second, the hook will simultaneously begin to alternate between in-feeding and out-feeding while maintaining down pressure. This speeds up positioning the hook to lift under the foot of the rail where excessive or cemented ballast would otherwise impede or prevent achieving this position.

Where manual traction has not been used to correct for stopping short or overrunning the next tie.[1]

Prior to this feature, the nature of the clamp joysticks is such that lateral and downward directions cannot be simultaneously selected. Using a clamp joystick to manually dig down into ballast was difficult and time consuming.

Run-out

1. Mark the last tie tamped before starting the run out if it is necessary to return to the same spot later in the day.
2. Press F5-Work Start/Stop/Resume on the Third Main Toolbar to open the Work Start/Stop/Resume Panel. Press F3-Ramp Out , when the F3 button is pressed a lift ramp is installed from the present lift to a minus 1 ½" lift at the default lift rate.

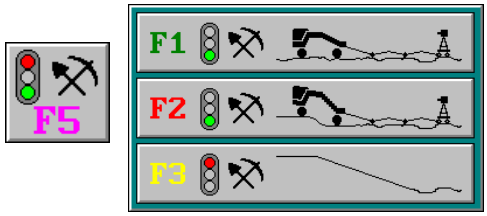

Figure 4-61

3. If possible it is best to keep the ramp less than 89 feet in length (projector to shadowboard) to keep the receiver from going out on unsurfaced track.

NOTE: When running out, ensure that the projector lights go out so that a smooth transition is made to unsurfaced track.

4. If the track has been pre-recorded, the operator may press F2-Throws Change Panel from the expanded track view screen and set the throws graph to where there will be no throws at the end of the run-off.

Preparing to Travel

1. Set the spring applied parking brake and release the travel/service brake.
2. Turn the L/H and R/H vibrators OFF by pressing in on the vibrator buttons on the bottom row of the L/H keypad.
3. Raise the workheads using the left and right workhead manual joysticks to their up most position. Lock the workheads into their safety locks by pressing the workhead lock button on the L/H keypad. Lower the workheads into the locks to ensure that they are truly locked.
4. Raise the clamp frame by using the two outside clamp frame joysticks. Pushing them forward will cause the clamp frame to raise to the upper limit switches of the clamp frame. Release the joysticks and push them again to cause the clamp frame to come up to its up most limits.

   Lock the clamp frame by pressing the clamp frame lock on the L/H keypad. Lower the clamps into their locks to ensure that they are truly locked.
5. When preparing the machine for travel (loading buggies). Place the **TRAVEL/WORK** switch to the **TRAVEL** position.

6. When loading or unloading the projector buggy and pusher bars the **P2 MANUAL PUMP** push button will be used to energize the P2 pump (manual pump push button is located on the right front corner of machine). Refer to figure 4-62

7. Dismount the cab, go to the front of the machine, raise & unlock, then lower the projector lift mechanism to the load-up position (refer to figure 4-62), fold up the buggies one at a time and lock them in with their respective locking pins. Raise the lift frame into the track travel position by moving the RAISE/LOWER lever upward (pump button on) then locking the pusher bars and projector buggy in place with the 1" locking pins provided on the R/H front corner of the machine (refer to figure 4-63). Lower the frame onto the locking pin. Remove the lining projector and store the projector cradle in its travel position.

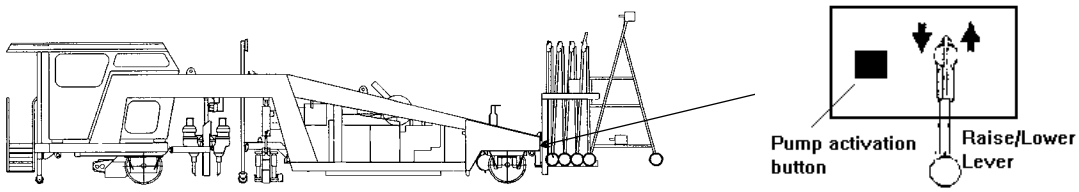

Figure 4-62

Keep hands and fingers clear of all pinch points. All pinch points are clearly defined or painted red. Refer to Appendix for further detatils,

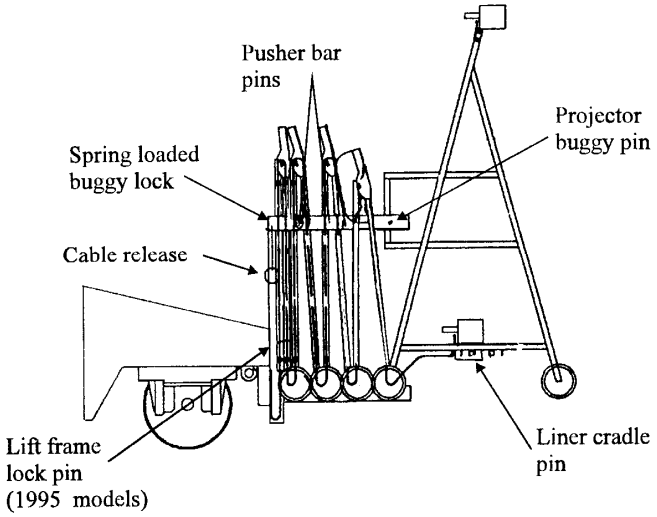

Figure 4-63

8. Raise the surfacing shadowboard by activating the switch located just ahead of the R/H workheads. Lock into place.
9. Swing the liner splashboard back against the side of the machine for track travel purposes.
10. Raise the receiver buggy by activating the switch on the R/H outer rear of the machine. Lower it into its locks and store the lining photocell.

NOTE: The computer controls the operation of the Clark Transmissions and the Clark Transmission will not work properly in automatic without the rpm's being at maximum.

Set the travel/service brake, release the spring applied parking brake, and select either forward or reverse travel and automatic on the L/H arm console. Release the travel/service brake, depress the foot pedal on the foot console in front of the operator and increase Rpm's to maximum.

Restarting a Run-out

Keep hands and fingers clear of all pinch points. All pinch points are clearly defined or painted red.

All buggies must have their safety locks securely in place before attempting to unfold the buggy system. Failure to do so could result in bodily injury. Refer to Appendix D for detail instructions concerning the operation of the buggy locks and the deployment and storing of the pusher bars and buggies .

1. Make a note of the lift reading before starting a run -out.
2. Mark the tie where run-out began.
3. Return to the start of the run-out. Follow procedure for SETTING-UP the MACHINE for WORK and SETUP – BUGGIES.
4. Place the TRAVEL/WORK switch to the Work position.

NOTE: The number of buggies, surface & line reference and mile post settings should be checked.

5. Press F2-Surface Projector ON/OFF on the First Main Toolbar to enable the surfacing system. The projector emblem will be red if activated, or gray, not activated. Turning this projector ON enables the surface projector and lifting system.

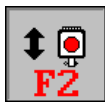

6. Press F3-Line Projector ON/OFF on the First Main Toolbar to enable the Lining system. The projector emblem will be red if activated, or gray, not activated. Turning this projector ON enables the lining projector and lining system.

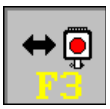

7. Move the machine to the first tie to be tamped (at least 5 ft.); this will also allow the liner gauge wheels to properly bias to the reference rail.
8. Clear any existing track, track recording or fit, by using the F2-Wipe button. The F2-Wipe button is located on the third main toolbar button set.
9. Press F5-Work Start/Stop/Resume on the Third Main Toolbar to open the Work Start/Stop/Resume Panel. Press F2-Resume WORK to open the resume work panel.

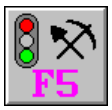

This panel is used to resume or restore the lift, throws, superelevation and line of the previous run-out.

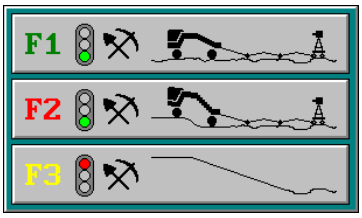

NOTE: "Resume Work"; The Resume Work panel will open using the values that were stored by the F3 key of the work start/stop/Resume panel thereby giving the opportunity to inspect, retain or change the display values before they are applied.

If the values were not stored using the Work Start/Stop/Resume Panel, the Resume Work Panel, allows you to re-enter this data manually before pressing ENTER to resume work.

Any adjustment made to surface, throws (line shift) or line is an "A" point adjustment.

The F3 and F4 keys can be used to select superelevation and curvature for modification prior to resuming work. Press the Enter key to accept or ESC will close this panel and returns to the WORK START/STOP/RESUME panel.

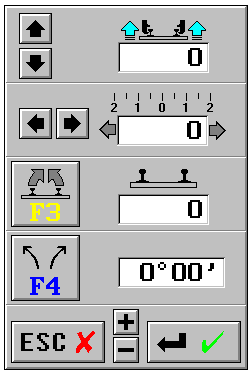

Figure 4-64

10. Follow the WORKING procedure before tamping commences. Refer to page 4-38.

Switch Lifting

NOTE: The operator may wish to move the rear axle rearward before continuing this exercise.

Numerous variations will be encountered by different operators when lifting and lining switches and turnouts. There are a few rules to follow to successfully lift and line a switch to satisfaction.

- Ensure that all ties in the area to be lifted are secured to the rail by the appropriate fastening devices.
- Ensure that all ties in the area to be lifted are of good quality.
- Ensure there is enough ballast in the area to hold up the ties being lifted.
- If possible, have the raise established before entering into switch mode.
- ALWAYS visually inspect the bias wheels on the projector and receiver buggies to ensure they stay biased to the appropriate rail, especially in the point and frog areas.

When approaching the points of a switch, approximately three ties before the points the machine has to be switched into switch mode. Record the lift being established at this point. The projector is on the main line. Do a surface "hunt" or manually lower the receivers to the point of cutoff. Record this figure from the lift window.

Back the machine and all buggies to the point where the switch can be thrown to the turnout side. Throw the switch to the turnout side and carefully move the machine back to the same tie that it was originally on.

Do a surface “hunt” again with the projector now in the siding. Record this figure from the lift window. This will normally be a different figure from the one previously recorded. Whatever the difference was between the first two figures, i.e. from lights on to lights off, add this to the last figure and now the machine will be raising the track to the same height as it was when on the main line.

Turn the liner off. Commence tamping the track. When the machine enters into the frog area, (shadowboard) manually raise the outside receiver approximately ½”. Continue through the frog area. When out of the frog area lower the one receiver back down to its original crosslevel status. Make a run off into the siding.

Throw the switch to allow the machine to be backed out of the siding. Throw the switch points back to the main line. Traverse the machine forward, returning to the same tie previously mentioned (three ties before the points). Re-enter the lift that was previously being made before going into switch mode. Turn the liner ON. Commence lifting, lining and tamping the switch. The turnout side is now up and supported and will allow easier lifting and lining of the switch.

Each tie should be raised and tamped to ensure a good surface throughout the switch. All points of each tie should be tamped to consolidate the ballast at all points possible.

When lining the switch, make sure the workheads are not traversed out into the area whereas to interrupt the lining projector light.

Time and Date

Time and date are set from the defaults panel (F5 on the third toolbar of the expanded view). Press F3 to access the *Time and Date Set Panel.* Use the F1 key to toggle between the (desired) active fields. Press the plus/minus keys to adjust the time and date. **NOTE:** Yellow highlighting indicates active field.

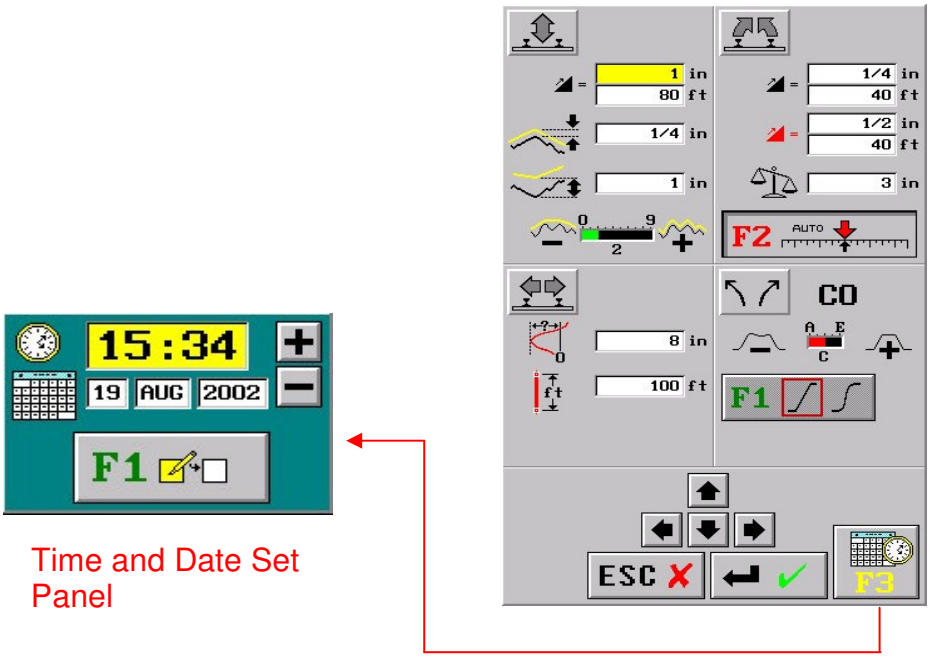

Enhanced Distance Panel

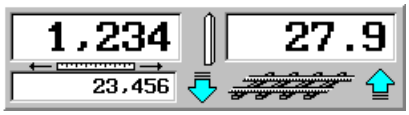

Through popular request, an additional footage box has been added to the distance panel that appears on both the main screen and the expanded track view. The larger footage box (upper left on panel) is the same as the footage box that existed in previous versions where the footage is automatically set to zero at the start of each new recording. The new footage box (lower left) can only be changed by the operator and is not used internally for any purpose. At the discretion of the operator, this footage can be used to accumulate track tamped or to synchronize with line-side features where location is marked in feet (or ignored completely).

Like mileage, the new footage counter can be set to count down with forward movement as indicated by the left cyan up/down arrow on the distance panel. The set distance menu (F1 on the second toolbar of the main screen) has been slightly modified to accommodate the new footage as follows:

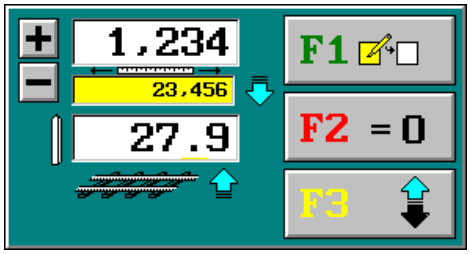

The F1 button now selects one of three fields to work with compared with only two in previous versions. As before, the F2 button will set the selected (highlighted) field to zero. The F3 button now selects the counting direction for the selected field (which was previously only used for mileage) and is therefore disabled when the normal footage is selected (which only counts up in the forward direction).

Surface Work Zeros

Surface Work zeros (as distinct from record zeros) have been added. In previous versions, adjustments to surface actuator zeros (for cross-level correction and discrepancies between predicted and actual lift) were applied by modifying the surface record zero values. Such adjustments were lost when a record zero calibration for surface was done and were ineffective on the surface fitting option.

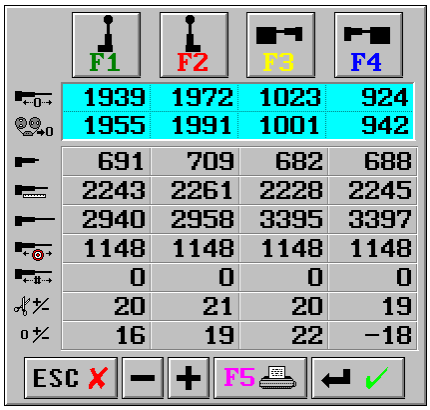

The new zeros work equally well with surface fitting and are preserved (as a differential) when a new surface record zero calibration is done. When machines are used to lift track to

surface monuments (stakes), the surface work zeros allow any discrepancy between estimated and actual lift as measured against surface stakes to be accurately compensated for.

Lifting to Stakes or Monuments

Operating procedure

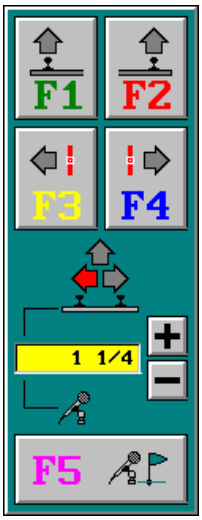

To lift to stakes or monuments, follow this procedure. While recording the track to be worked, stop the machine at each surveyed location. Press the F5 key to open the feature-marking panel. Type the desired lining pull or surface lift (do not use a minus key). Press F3 to enter the typed value as a lining pull to the left, or Press F4 to enter the typed value as a lining pull to the right. Press F1 to enter the typed value as a desired lift over the left rail. Press F2 to enter the typed value as a desired lift over the right rail. There will not be much benefit to entering lift values of much more than about 6 inches as additional passes will almost certainly be needed.

If F1 and F2 are both pressed at the same location, only the last key pressed will determine which rail the desired lift will be applied to.

If F3 and F4 are both pressed at the same location, only the last key pressed will determine which direction the entered lining pull will be applied.

After the recording is complete, the best fit for surface will automatically apply any recorded surface survey data. Make sure the maximum lift is not interfering with the fit between surveyed locations. Increase the maximum lift if there is any doubt.

To accurately achieve the desired lift at the surveyed locations (final pass), the remaining lift at each station should not be more than about an inch (or less). Larger lifts may well require one or more passes. If this is not going to be the final pass, make sure there will be at least some lift remaining at those locations where the track height is getting close to final. You can do this by rubber-banding such locations to a lower lift and/or making sure the left lift slider (manual correction) is “in the red” by the amount you wish to leave for final using the up/down arrow keys as you work through the higher locations. As always, any manual variations used should be changed very gradually. Before doing the next pass, it will be necessary to record the track again, re-measuring and re-entering the remaining lift at each surveyed point.

If there are any lengths of track longer than a couple of hundred feet for which no survey points were entered, it may be necessary to control the lift outside of the surveyed sections. Do this by using surface fit sensitivity, minimum/maximum lifts, default rate of change (defaults panel) or manual changes through rubber-banding. Be careful not to change surveyed locations unless you need to as mentioned in the previous paragraph (or you are correcting an entry error). Control points at surveyed locations can be identified by a milepost symbol, which appears just below the footage column of the cyan screen of the surface rubber-band panel when selected footage corresponds to a recorded point for surface.

How it works

In previous versions, design lifting to specified values at surveyed locations or stakes using surface fitting was possible, but much more difficult than the corresponding procedure for line.

To simplify design lifting, the first step was to make it possible to enter design lift at surveyed locations during the recording phase.

Surface survey data entered during the recording phase (surface monuments) will be handled differently by the surface fit after the recording is complete. Each surface monument will be treated in a fashion similar to the ends of fixed or immovable objects except that the value of lift at these locations will match the entered value instead of zero (for a fixed point). As for fixed points, the maximum rate of change for surface near surface monuments will be limited to the default rate of change for surface as given by the upper two values on the defaults panel (F5 of third toolbar on the expanded view). If the distance between two surface monuments is large, the normal criteria for a surface fit will be applied between the points in terms of clearance over high points, rates of change and maximum lift. Under normal circumstances, surface monuments are typically in the order of a hundred feet or less apart and there will be no fit (control points) between them.

When there are a number of surface monuments recorded, this information is used to further refine surface accuracy in the following way. After the final surfacing pass is complete and the track height exactly matches the desired values at the surveyed locations, there will be no remaining long wavelength errors excluding designed vertical curvature (providing there are no errors in the survey information). The surface fit uses this assumption to further refine the estimated track profile (the green and purple traces on the surface panel). This refinement results in a flatter final fit (yellow line) and improved accuracy in the resulting track.

Low Point Compensation

Operating Procedure

Low Point Compensation is a feature that uses the surface profile (track height) estimated during a surface fit from recorded surface data to produce a result that will more fully correct surface errors and last longer before resurfacing will be needed. Short dips will be slightly peaked and will require subsequent settlement before actually becoming flat while longer surface errors will be more fully corrected (closer to level or less dipped).

Low Point Compensation is applied as a percentage. A value of zero results in no additional lift. Lift at each location is estimated based on the estimated change in height, increased by the Low Point Compensation percentage. This effect is applied to the yellow fit line so that the resulting track profile (assuming zero settlement) can be seen. The percentage can be increased (up to a maximum of 50%) to help cope with areas where track “memory” is a problem.

On the surface rubber-band panel, use the F2 button to open a secondary panel that is now used to enter the minimum lift over high points, the maximum lift through low points and the Low Point Compensation percentage. While this panel is open, the ability to use the corporal keys and plus/minus keys to navigate through control points is retained and remains the same. The F4 and F5 buttons also retain the same functionality as the primary panel for surface.

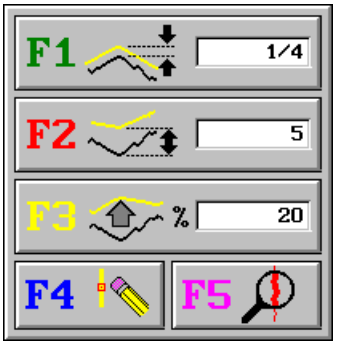

When F3 on this panel is pressed, the Low Point Compensation percentage can be typed using the IBM keyboard, or changed by 5%

at a time using the plus/minus keys. The effect will be immediately seen in the yellow fit line.

How It Works

Although a tamping machine can accurately hold track at a desired height while it is being tamped, the track will subsequently suffer a loss of height through immediate (poor conditions), short term and long term settlement. Short-term settlement in particular is a function of the amount the track has been disturbed, which in turn is related to the amount of lift applied during the tamping process. It therefore makes sense to increase lift in proportion to the applied lift to compensate for this effect. This is the basis of low point compensation.

If lift was to be applied with absolute accuracy, such compensation would in principle result in track where low points became high points and high points became low points, at least prior to any settlement. In practice, the length or wavelength of preexisting surface errors when compared with the length of the machine or surface reference system is the dominant factor. Where Low Point Compensation is used, more lift will be applied at low points arising from short wavelength errors than at low points arising from long wavelength errors. This effect is entirely appropriate when the fundamental nature of surface errors as a function of wavelength is taken into consideration. Short errors are more likely to be the result of localized track weakness or abnormal settlement and therefore should be subject to more aggressive correction or even over-correction. Over-correction would require some subsequent settlement before the track became actually level. Longer errors are more likely to be intentionally present and less likely to be the result of variations in rates of settlement. As the machine does not measure or correct for the full extent of long errors, low point compensation will have less of an effect. Low points are more likely to remain low points, despite being more fully corrected by the additional lift arising from Low Point Compensation.

New Surface Fit Control Panel

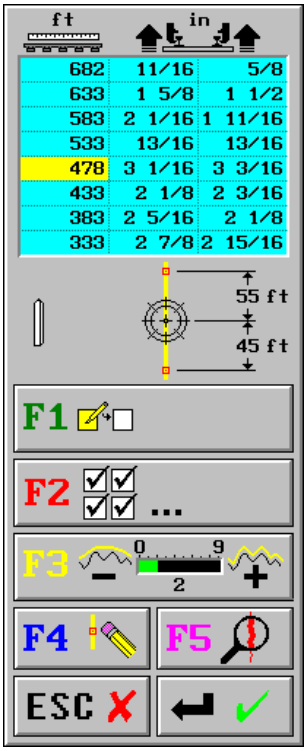

The surface rubber-band panel has been revised to allow for the introduction of Low Point Compensation and better control of the surface fit.

Note the milepost icon (just below the footage column of the cyan screen). This indicates that the currently selected control point is a “surface monument”, where desired lift at a surveyed location was entered during recording. Dragging or rubber-banding a “surface monument” enables the modification of, or correction of an incorrectly entered point.

The F2 button opens the secondary panel described in the preceding section.

The F3 button now provides direct access to the surface fit sensitivity. This control could only be accessed through the less accessible defaults panel in previous versions. While changing the minimum and maximum values of lift provided effective control over the resulting fit for surface, changing the surface fit sensitivity can frequently achieve the desired effect more smoothly and with less effort.

Superelevation Compensation

Operating Procedure

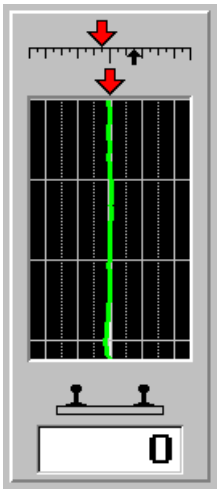

This feature allows the tamper to produce more accurate superelevation while automating operator adjustments where the track has been recorded prior to tamping.

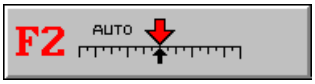

Enable this feature by using the F2 button on the superelevation rubber-band panel (F3 on the first toolbar of the expanded view). If there is no currently available recording of superelevation, this button will be disabled. It is recommended that this feature be turned off when tamping turnouts as the weight of the turnout will be a more dominant factor.

When superelevation compensation is active, the amount of correction being applied can be seen on the superelevation panel of the main screen. As in previous versions, the lower red arrow indicates the superelevation at the inclinometer or receiver buggy and the upper red arrow shows any operator correction (which is always retained). The black arrow underneath the inch scale on this panel indicates the superelevation compensation (showing three sixteenths to the right in this example). In previous versions (or when turned off), the black arrow will be at the zero position.

If tamping continues beyond recorded superelevation, or the feature is switched from on to off, superelevation compensation will be smoothly removed to prevent any sudden effect on the resulting superelevation behind the machine.

How it works

Although a tamping machine can accurately hold track at the desired superelevation while squeezing, there is a tendency for the track to settle when released in the direction of the preexisting value of superelevation. When the preexisting superelevation is known (recorded), compensation is added by applying a percentage of the amount the superelevation is being changed. At the receiver buggy, the success of the compensation is monitored and the compensation percentage is automatically adjusted up or down so as to leave ideal track.

The automatic and self-tuning nature of this feature allows any operator to surpass even the most skillful and vigilant operator in terms of the accuracy of superelevation behind the machine.

This Page Intentionally Left Blank

CHAPTER 5
TROUBLESHOOTING GENERAL

TABLE OF CONTENTS
TROUBLESHOOTING GENERAL

CHAPTER 5

General Troubleshooting Procedures 5-1
Linear Actuators 5-3
Potentiometer Installation 5-3
Jupiter MK4 Actuator Control 5-4
Actuator Calibration 5-6
Troubleshooting 5-7

Inclinometer 5-8
Principles of Operation 5-8
Inclinometer Zero 5-9
Troubleshooting 5-9
Pin Configuration for Inclinometer Connector Plug 5-10
Workhead Transducers – String Pots 5-11
Distance Wheel (Encoder) 5-11

Projector, Receivers and Photocells 5-12
Focusing Procedure 5-13
Photocells 5-13
Photocell Cables and Connections 5-14
Photocell Assemblies 5-14
Receiver Amplifiers 5-15
Operation 5-15
Troubleshooting 5-16
Double Barrel Receiver 5-17

GENERAL TROUBLESHOOTING PROCEDURES

Most troubles can be categorized into six general areas:

1. **Operator Problem**
2. **Mechanical Problem**
3. **Hydraulic Problem**
4. **Electrical Problem**
5. **Pneumatic Problem**
6. **Jupiter Network Problem**

Isolate the problem to one or more of these systems.

For Jupiter related problems, refer to the "Jupiter II Network Troubleshooting Guide" in rear of this manual (Appendix A).

Linear Actuators

Surfacing and lining receivers on the MKIV Tamper are moved up and down or in and out by specially designed ball-screw linear actuators.

There are four linear actuators on the MKIV used to operate the left and right surfacing receivers and left and right lining shadowboards. The linear actuators require 24 Volts DC power and have a stroke (maximum extension) of 18 inches. See figure 5-1.

All of the actuators have 10-turn 10,000 Ohm potentiometers (pots). These pots provide continuous feedback voltages to the analog input module. When electrical power is connected to the potentiometer, an output voltage is produced which is proportional to the actuator location. This voltage is then converted from an analog signal (volts) to a digital signal or number, which the computer system can use.

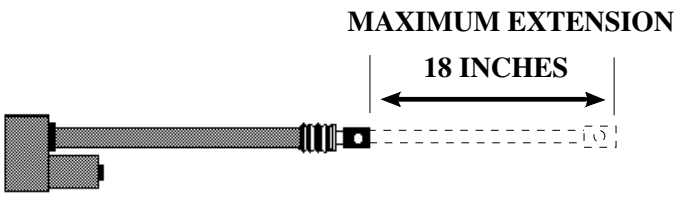

Figure 5-1

For example, when the motor on the actuator is turned ON, the gear on the motor shaft turns which drives the gear mounted on the potentiometer shaft. If the actuator is driven up or out the feedback voltage (signal) from the potentiometer should rise in the positive direction (toward +9.5 VDC). If the actuator is driven down or in, the feedback voltage (signal) from the potentiometer should decrease or move in the negative direction (toward -9.5 VDC).

Potentiometer Installation

The following procedure can be used to “zero" a potentiometer (pot) in a linear actuator.

1. Remove the screws from the pot mounting bracket.
2. Carefully remove the pot by moving it away from the worm gear. Make sure you do NOT damage the pot.
3. Center the linear actuator rod by moving it out **EXACTLY** nine (9) inches (from the fully retracted position), using the manual override switches.
4. **Gently** turn the pot, in either direction, as far as possible (until it stops).
5. Center (zero) the pot by turning it in the opposite direction for a total of five (5) complete turns (the pot has a total of 10 turns from one end to the other).
6. Install the pot in the linear actuator.
7. Install the linear actuator on the machine.

Jupiter Mark IV Actuator Control

The surfacing and lining actuators are controlled by a Digital Input Module, CAN 5 located in the MCB. Digital Input Modules have output capabilities limited to ½ amp. There is limited short circuit and no open circuit diagnostic capability for the digital input module.(See the end of this memo) The outputs from the input module are connected to the H Bridge driver which switches a separate current source, wire 0217, to the actuator motors.

You should notice that the brown wire on pin 1 is the 24 volt output on each of the 8 channels. You should also notice that each of the two inputs (black on pin 4; input A, and white on pin 2; input B) of each channel are available for use as needed. So each channel of a digital input module can have one output and two inputs connected to it when the cables are broken out on a terminal strip. Normally two inputs can be connected to each channel using a splitter and standard M12 cables.

The first two digits of Jupiter channel cable numbers indicate the module channel number. When the wire number has a color suffix such as BN, WH, BU, BK, then the Jupiter cable is broken out and connected to a terminal strip or a device terminal.

The control logic for the 4 actuators is as follows:

Actuator	Movement	CAN 5 Output	H Bridge Input Term.	H Bridge Output Term.	
R. Surface	Extend	01087BN	HB#1 CH1 IN1	MOTOR 1	M1A
R. Surface	Retract	02088BN	HB#1 CH1 IN2	MOTOR 1	M1B
L. Surface	Extend	03089BN	HB#1 CH2 IN1	MOTOR 2	M2A
L. Surface	Retract	04090BN	HB#1 CH2 IN2	MOTOR 2	M2B
R. Line	Extend	05091BN	HB#2 CH1 IN1	MOTOR 1	M1A
R. Line	Retract	06092BN	HB#2 CH1 IN2	MOTOR 1	M1B
L. Line	Extend	07093BN	HB#2 CH2 IN1	MOTOR 2	M2A
L. Line	Retract	08094BN	HB#2 CH2 IN2	MOTOR 2	M2B

The H Bridge drivers have thermal over current protection. If this trips it will reset when it cools down. Bench tests indicate that the overload protection will trip at about 5.5 amps and will reset within one minute. The reset time depends on ambient temperature and air movement. The EF, error flag, output on the H Bridge driver indicates that the thermal over current protection has tripped. This error flag indicator and will have 24 volts when tripped and 0 volts when there are no errors. The error flag for each actuator is connected to an input on CAN 5 as follows:

ERROR FLAG

Right Surface	Channel 3 Input A
Left Surface	Channel 3 Input B
Right Liner	Channel 4 Input A
Left Liner	Channel 4 Input B

The software will issue a warning such as “Right Liner actuator driver overload” if the over current protection has tripped. It should be noted that when the request to drive the actuator (output from the input module on IN1 or IN2) is removed, the error flag voltage goes to zero and resulting alarm message will cease. The error flag voltage will be high whenever the overload has tripped <u>and</u> the actuator is being driven by the Jupiter module.

The same applies to the throttle actuator control. The throttle actuator H Bridge driver is located in the Power Distribution Box (PDB). See the schematic for wire numbers.

H Bridge Driver

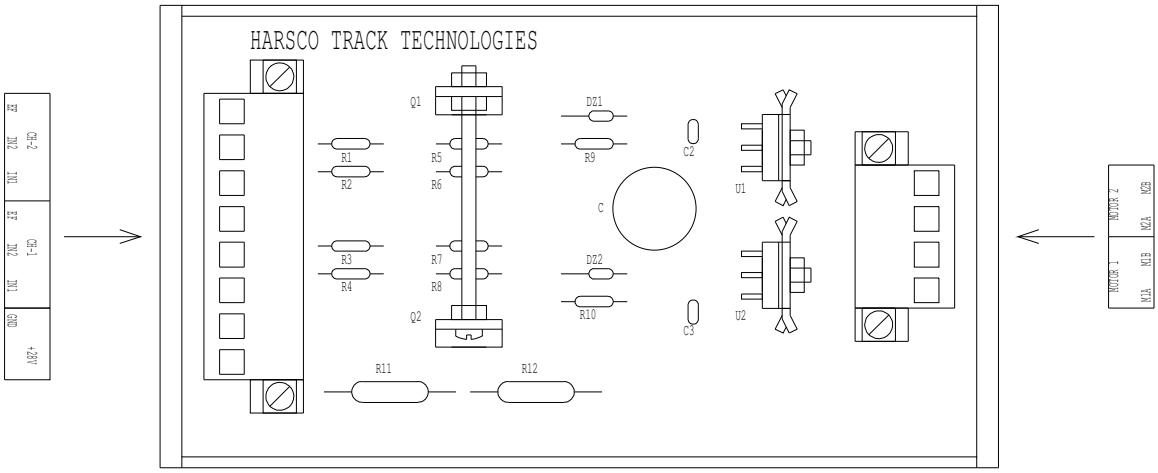

Actuator Calibration

Why Calibrate the System?

The MKIV uses many components in the process of getting information from the track to the computer. These include mechanical components, computer hardware (circuit boards, etc.) and the program software. The mechanical components are subject to wear and mis-adjustment. The electrical components vary in the way they convert signals, due to component tolerances and other conditions. But it must all work together in order to work properly. Calibration is simply adjusting the hardware and software so that the information it uses is correct and in the format required by the program.

You need to set up an actuator if any one of the following conditions exist.

- The machine is being used for the first time.
- An actuator is repaired/replaced.
- The potentiometer (pot) located in an actuator is replaced.
- The pot gear in an actuator is replaced.
- The set up has changed because the set screw, which is located on the pot gear, was loose and the gear slipped. Loctite should be used to secure the screw.
- The linear actuator motor has been changed.

NOTE: If the quality of surface is not up to standard and a problem is suspected, it is highly recommended to re-calibrate the actuator as a quick and simple troubleshooting technique.

If you need to replace a motor in a linear actuator, make sure the replacement motor is 36 volts DC. The machine is 24 volts DC which means the speed of the motor is reduced. This assures that the movement of the linear actuators is accurate.

Make sure the four (4) values referred to as control constants are set up for each linear actuator. These values are stored on the JAM Box and backed up in permanent storage. For actuator setup information refer to section 4.

Troubleshooting

1. **Actuator will NOT move.**
    - Access the actuator manual override screen and try to move the actuator with the manual switches.
    - Check for 24 volts DC at the motor.
2. **Actuator moves but ACTUAL values on screen do not change.**
    - Check for broken or damaged cable or loose wire(s) to the pot.
    - The wires are NOT connected to the correct terminals on the pot or the pot has failed.
    - Check voltage (+9 and -9 VDC) output from the Jupiter Diagnostic Screen.
3. **Actuator does not indicate current Position.**
    - Check voltage (+9 and -9 VDC) output from power supply to the pot.
    - Check for broken or damaged cable or loose wire(s) to the pot.
4. **Actuator retracts without computer control.**
    - Check for problem with the +9 VDC wire (pin #1 on pot).
    - Check the red and yellow wires on the motor (may be reversed).
5. **Actuator extends without computer control.**
    - Check for problem with the -9 VDC wire (pin #3 on pot).
    - Check the red and yellow wires on the motor (may be reversed).

Inclinometer

The MKIV uses an inclinometer, mounted on the receiver buggy, for several functions. It is used by the surfacing system to monitor the track level behind the machine and by the measuring system to measure curve elevation.

The inclinometer outputs a voltage signal which is sent to the analog input module. As the track tilt changes, the voltage sent back to the input module will change. The processor, reacting to the voltage change, will instruct the module to turn on the appropriate surfacing actuator motor relays. The actuator(s) are driven up/down as necessary in order to maintain proper cross level behind the machine.

The measuring system processor, uses the inclinometer information during the curve recording process to locate existing ramps and areas of bad cross level. This cross level information is used during the curve lining process to achieve greater correction of lining than would be possible if the signal was not used.

The inclinometer is fully self-contained and designed to operate from a standard DC power source. The output is an analog DC signal directly proportional to the sine of the angle of tilt. The maximum tilt of the inclinometer used on the MKIV is ±14.5 degrees from horizontal. The output voltage will be +12 volts DC when tilted +14.5 degrees and -12 volts DC when tilted -14.5 degrees.

The core of this gravity-referenced sensor is a FLEXURE-supported torque-balance system, rugged enough to withstand severe shock and vibration and still maintain accuracy. The electronics and sensor are enclosed within the sealed housing which is filled with a light oil for dampening purposes, permitting operation in hostile environments.

Principles of Operation

As the inclinometer is moved the **TILT ANGLE "0"**, and the **PADDLE "A"** tries to move in the direction of the tilt (due to force of gravity). The result in change is relative to where **PADDLE "A"** is to the **POSITION SENSOR "B"** which produces an error signal input to the **SERVO AMPLIFIER**. This drives **TORQUE MOTOR "C".** The motor immediately drives the **PADDLE "A"** back until the **SENSOR "B"** detects that the **PADDLE "A"** has returned to its original position, less a minor displacement to produce an error signal. In order to hold **PADDLE "A"** at null position a current is required; this current is supplied by the **SERVO AMPLIFIER** and is proportional to the sine of the angle of tilt. By permitting the current to pass through a stable resistor **R1**, a directly proportional voltage output is developed. Stops are provided on both sides of the **PADDLE** to limit its travel when not powered.

When power is applied, the **PADDLE** moves to its null position for a few seconds until an error signal can be established by the **SENSOR** system. See Figure 5-10.

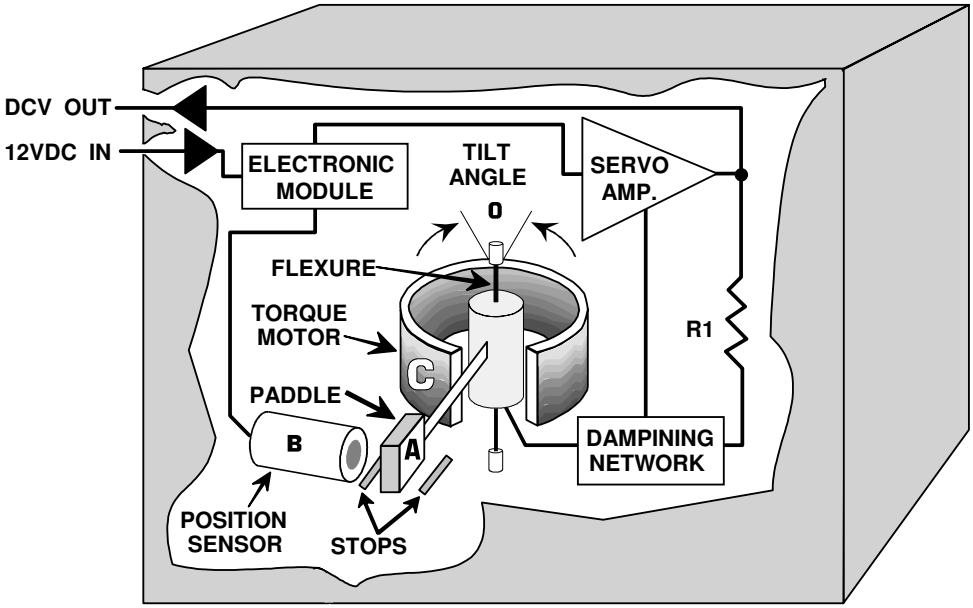

Figure 5-10

Inclinometer Zero

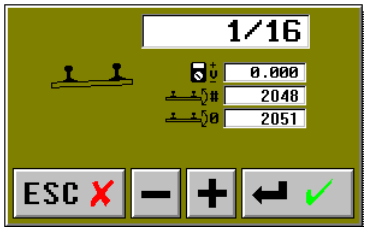

Figure 5-11

The inclinometer screen is used to set a zero for the surface leveling system. See Figure 5-11.

The operator must measure the cross level of the track with a level board and then use the plus (+) and minus (-) keys to change the value displayed in the inclinometer reading information box to match the actual track level. Once the zero is set this window may also be used to display the actual cross level of the rail at any time.

Troubleshooting

Power for the inclinometer is supplied by the inclinometer power supply through the analog input module. The voltages applied to the inclinometer are +15 and -15 volts DC. A signal wire provides the signal back to the analog input module where it is fed to the JAM Box.

If a problem is suspected with the inclinometer, stop the machine and access the INCLINOMETER READING screen (shown in figure 5-11) and monitor the inclinometer voltage and digits. The output voltage seen should be very stable and the digits should not fluctuate more than ±5 digits. The following tests can be performed if the readings appear suspicious, absent or erratic.

NOTE: The INCLINOMETER READING screen will display default values if the signal is missing. The digits box should read -4048 and the voltage box should read -10.

1. Place a spacer under one of the receiver buggy wheels. The calibration factor for the inclinometer is 68 digits per inch of track elevation. If a block of 2x4 lumber (1 1/2" thick) is placed under one of the wheels the screen value displayed would change by approximately 102 digits (1.5 x 68). The inclinometer signal changes in the positive direction for right hand curves and in the negative direction for left hand curves.

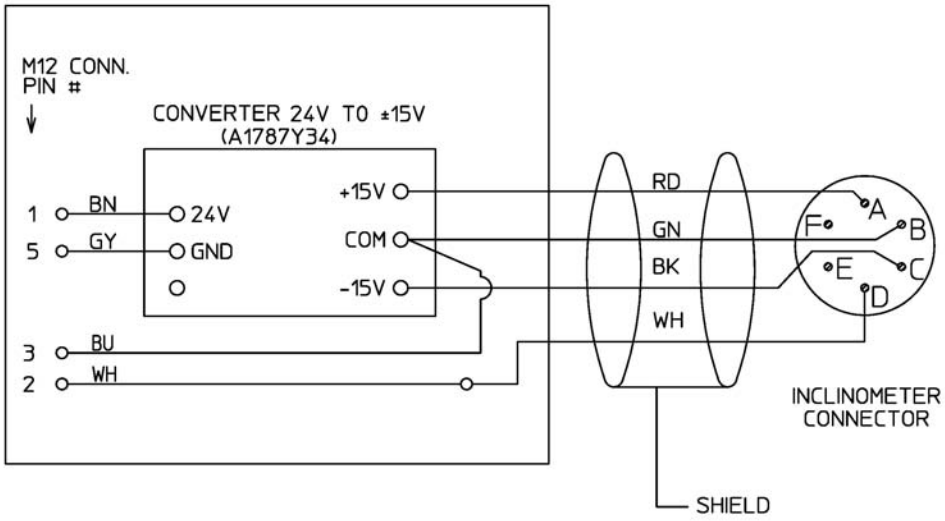

PIN CONFIGURATION FOR INCLINOMETER CONNECTOR PLUG

2. Disconnect the connector plug from the inclinometer for the following tests. With the computer turned on measure power supply voltages to the inclinometer. Use pin B (COMMON) as the ground for these measurements. Refer to the plug pin connections shown in figure 5-12.
   - Pin: B to Pin: A (+15 VDC) plus or minus 0.1 volts
   - Pin: B to Pin: C (-15 VDC) plus or minus 0.1 volts
3. Replace the Jupiter Cable
4. Unbolt the inclinometer from the cross bar and ensure that the mating surface is clean and free of bumps or weld marks etc. Bolting the inclinometer to an uneven surface can cause problems or even unit failure. Measure the signal voltage using the diagnostic panel at the Analog Input Module. You should see a voltage change when the inclinometer is tilted from side to side. The signal is positive from the zero signal for right rail elevation and negative for left rail elevation.

Workhead Transducers - String Pots

The transducers (string pots) use an internal potentiometer with a string system that changes the resistance or voltage when the string is extended. The Jupiter Control System uses this voltage to position the workhead to the proper height.

Note: The transducer presently only uses 5 wires: These wires are contained within a pre-molded Jupiter Network Cable. Each wire inside the network cable is color coded and corresponds to a specific pin number on the Jupiter Input Module. See the list below for color coding, pin numbers and function.

Brown (Pin 1) +24 VDC exc (excite). **White** (Pin 2) Signal **Blue** (Pin 3) +10 VDC RTN
Black (Pin 4) +10 VDC exc. **Gray** (Pin 5) RTN for +24 VDC

To zero out a string pot, hold the workhead manual joystick in the up most position for five (5) seconds.

Distance Wheel (encoder)

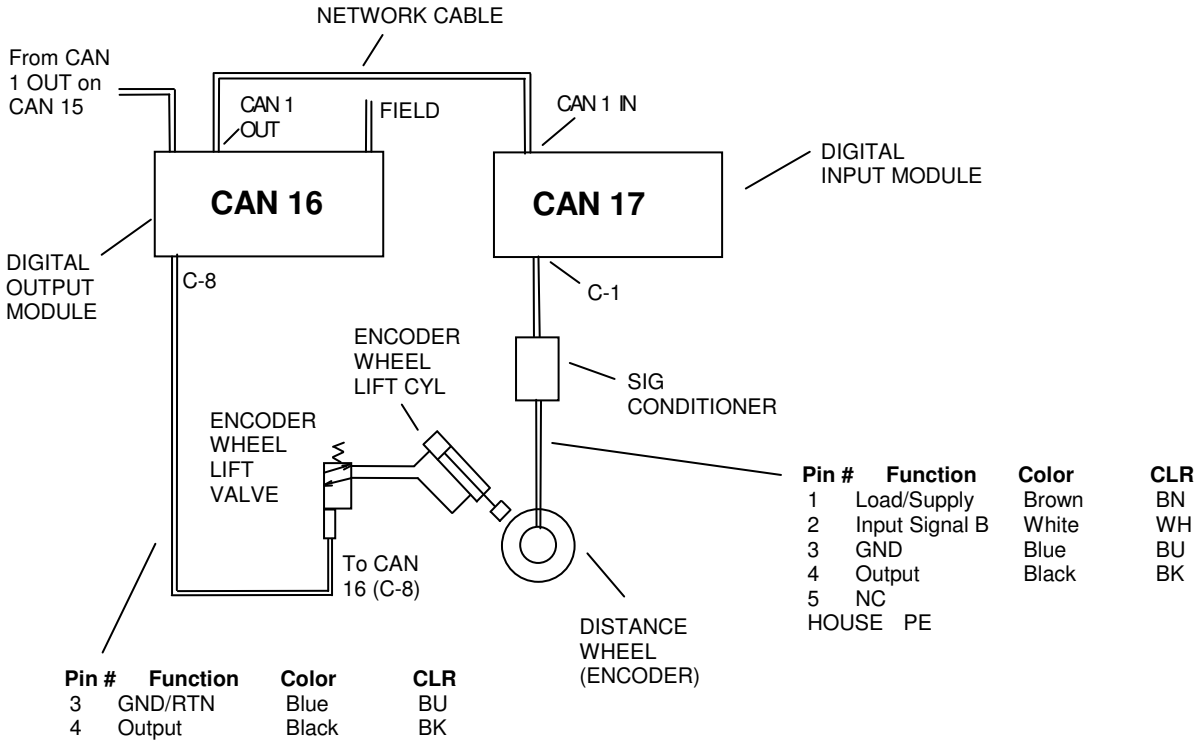

In order for the MKIV tamper to automatically ramp IN/OUT or graph curves a means of counting distance must be incorporated. The counting capability is provided in the form of a distance wheel with and optical encoder. As the wheel rotates, quadrature or square wave signals are sent from the distance wheel, via a Jupiter network cable (WH wire - Pin 2), through a *sig conditioner* and then to the C-1 connector of the (CAN 17) *digital input module*. *See diagram above*. Once the digital input module receives the information from the encoder wheel, it is then processed by the JAM Box and the resulting data is displayed on the Jupiter Main Screen. ***For more information on the Jupiter System, refer to the Jupiter Troubleshooting Guide in Appendix A.***

Projectors, Receivers and Photocells

The receiver system that is currently being used on all Tampers with a surfacing system has been used since 1964. A number of improvements have been made to this system to improve the operation and the reliability. However, to maintain this reliability, there are a number of things we need to know about how this system operates. We will now look at the operational theory of the light system.

Mounted on the projector buggy is a 24 volt infra red projector. The projector is producing a modulated beam of light that is transmitted back to two receivers on the rear of the machine. This beam is modulated at a frequency of 482 impulses of light per second. The receivers are designed to receive this frequency and will NOT work properly with any other frequency. This is done to prevent the receivers from picking up light from other sources such as signal lights, train headlights, automobile headlights etc. Refer to figure 5-17.

On a Mark IV, the projector chopper motors are DC. motors and are affected by the voltage at the chopper motor. The voltage to the motors must be set at 15 volts DC and can be adjusted with the R1 potentiometer located on the motor speed board (measure between pin 5 and pin 15 and adjust R1 to 15 volts). At this voltage the projectors are producing a frequency of 482 impulses per second (+ or - 5%). If this frequency is either lower or higher than this designated frequency, the signal strength to the receivers is diminished. If this frequency gets outside the operating band width of the receiver, the receiver will not work. When the signal strength is diminished, cross level problems will start to be encountered.

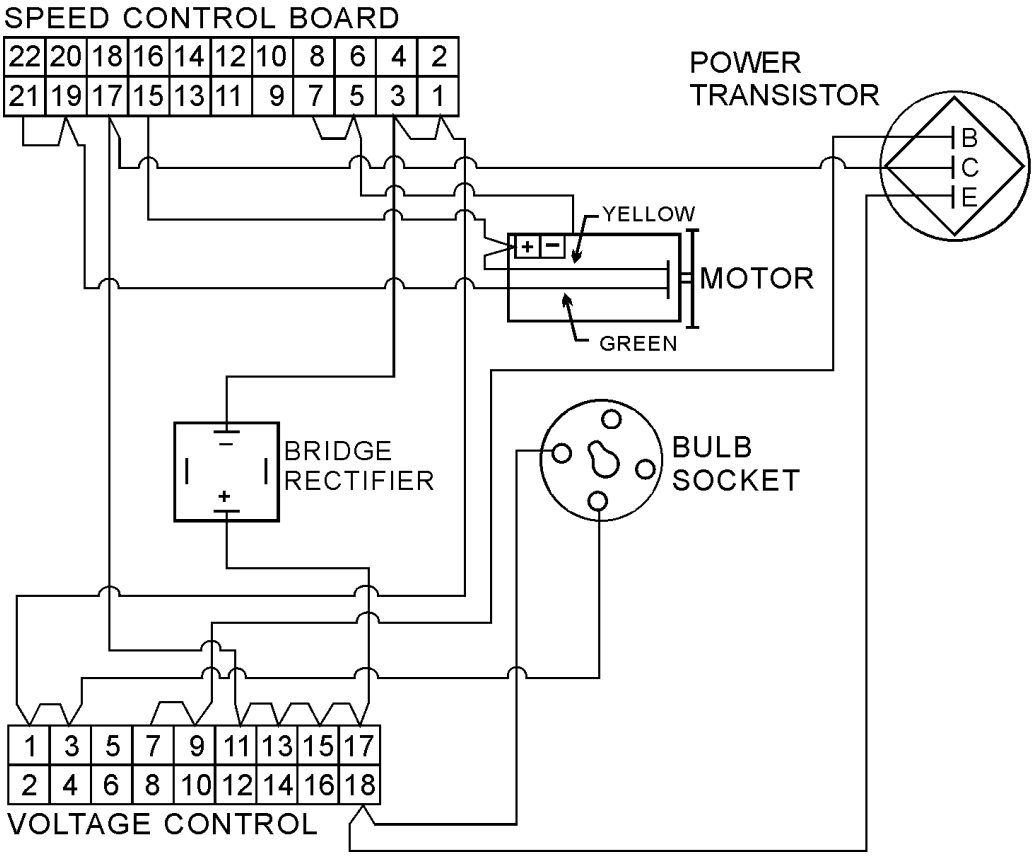

Figure 5-17

The next major concern in the projectors is the amount of light that's being produced, along with the alignment and focus. The intensity of the light from the projector bulb is determined by the bulb voltage. This voltage is approximately 17 volts and can not be altered therefore eliminating any major problems. The focus and/or the alignment can cause cross level problems, therefore needs to be checked periodically.

Focusing Procedure

To focus the new style Halogen bulbs, it will be necessary to turn the projector on. Remove the red filter lens cap, and position a piece of white paper perfectly vertical approximately 6" - 8" away from the projector tube. Make the necessary adjustments to the bulb base to insure that the image on the paper has a well defined circular pattern of light, i.e., no shaded areas on the perimeter of the circle. See Figure 5-18.

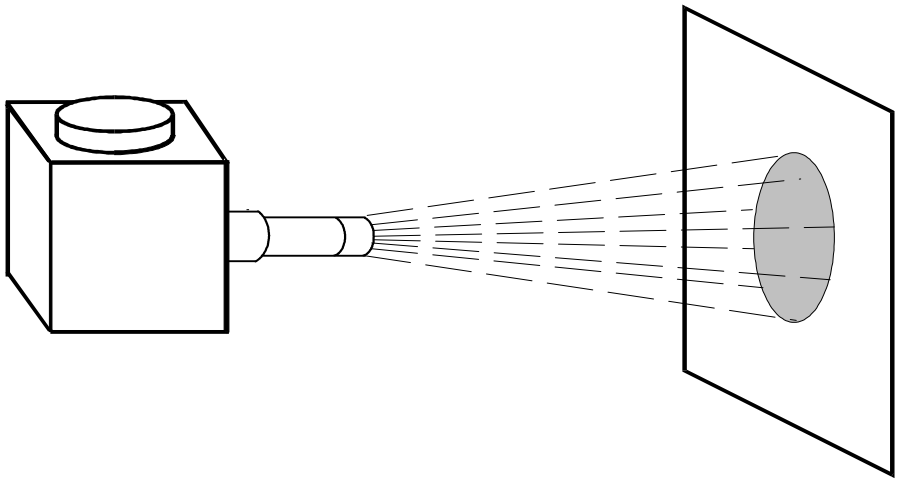

Figure 5-18

As you can see by the adjustments described herein, the projector plays a very important role in producing quality surfaced track with good cross level.

The projectors used on the lining system are the same as used for surfacing. Therefore, if your machine is leaving bad line behind the machine, i.e., line swings, kinks, changing zero's, etc., the above adjustments could cure these problems.

Photocells (

Two types of photocells are currently being used on HTT equipment. The lead sulfide and the silicon unit. The lead sulfide has the appearance of a flashing reflector, whereas the silicon has a black housing with an elongated glass lens on the face plate. See Figure 5-19.

Normally, ambient light does not have any effect on either of these photocells, however sunlight will. The lead sulfide unit will "flood out" with direct sunlight, and refuse to work. The silicon cell when flooded, will turn on.

With this in mind, we do not recommend using the silicon cell for surfacing, therefore preventing the possibility of humped track due to direct sunlight.

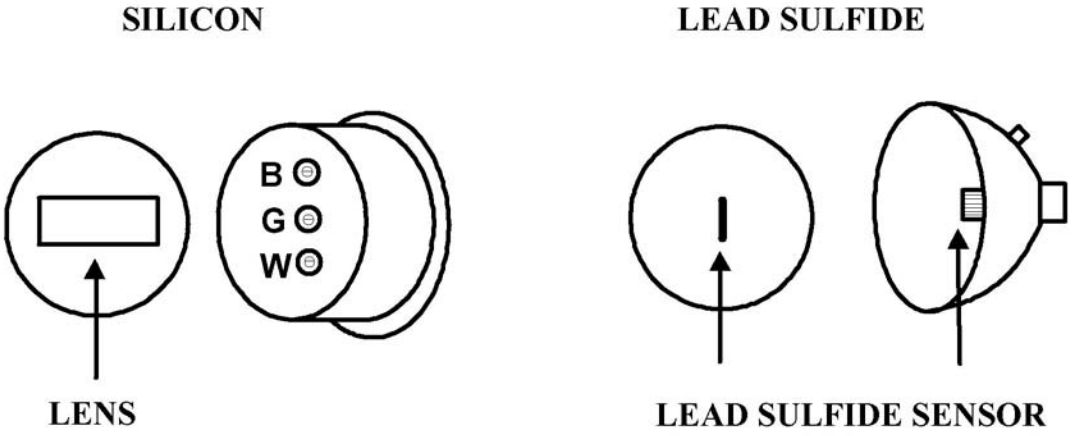

Figure 5-19

Photocell Cables and Connections

The lead sulfide photocell uses a two conductor shielded cable and is to be connected as shown in figure 5-22. The silicon photocell used a three conductor shielded cable and is to be connected as shown in figure 5-23.

Photocell Assemblies

In order to obtain maximum performance, the photocell assemblies must be installed as per figure 5-20 and 5-21.

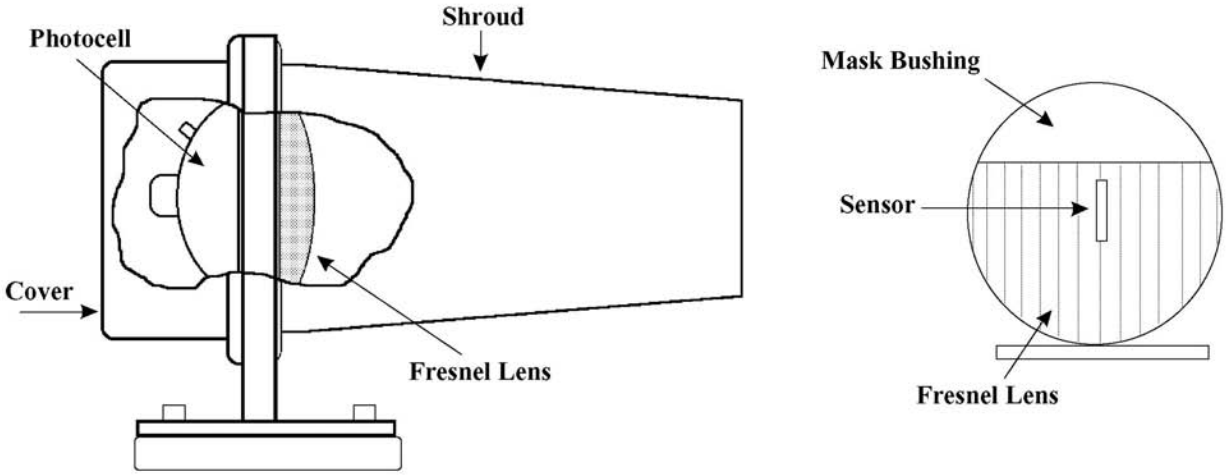

Figure 5-20 - Surfacing

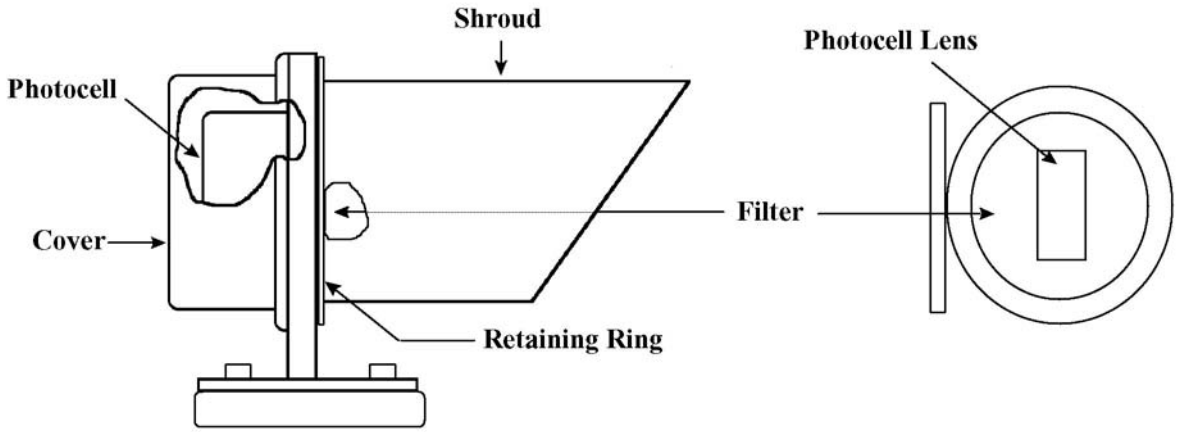

Figure 5-21 - Lining

Receiver Amplifiers

The receiver amplifiers that are currently being used on the MKIV are very similar to those used on MKI, II and III machines except they are **24 volts DC**.

Operation

The photo-cells pick up the light beam from the projectors and convert the light into an electrical signal that is directed to the receiver amplifiers. The receiver amplifiers receive the signal from the photo-cells and amplify the signal voltage into a working voltage that the computer can read. The signal is then sent to the Digital Input Module. If the computer receives a high signal (+9 volts DC) from the amplifiers it instructs the left and/or right surface indicator lights to illuminate which indicates that jacking will occur. When the operator initiates cycle, the computer energizes the jacking relays, which supply power to the jack valves. Jacking occurs until the shadowboard intersects the infrared light beam. With the light beam now blocked, the computer de-energizes the jack relays and turns off the surface indicator lights.

Surfacing (lead sulfide) Photocell Hook Up

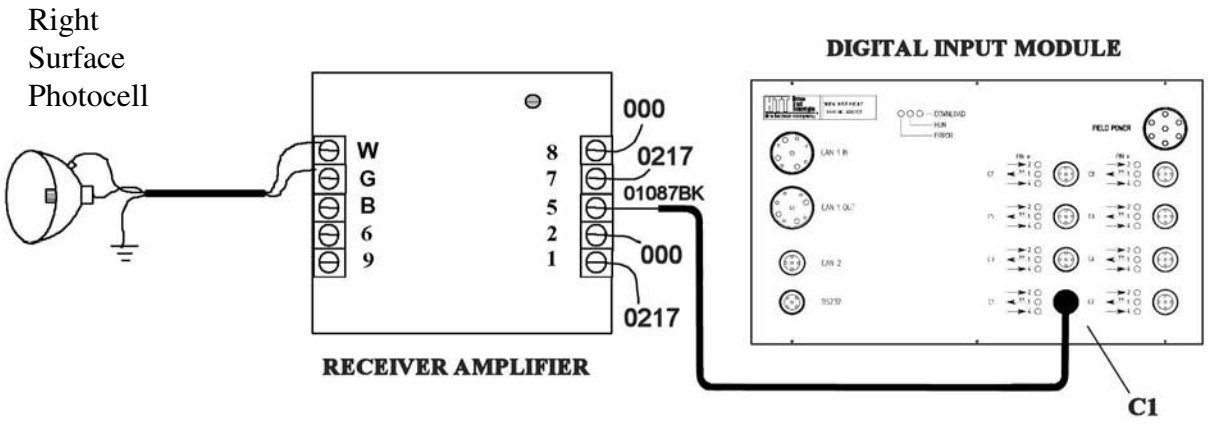

Figure 5-22

Lining (lead sulfide) Photocell Hook Up

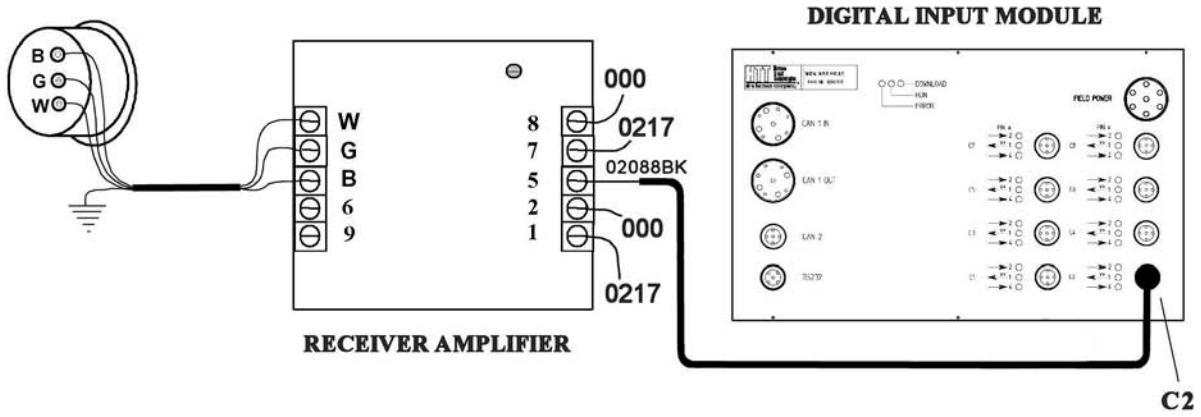

Figure 5-23

Troubleshooting

In troubleshooting this system, you may encounter one of the following problems, and the probable cause.

1. No surface light or light beam.

- No projector light.
- Chopper disc in projector not turning proper speed.
- Projector not aligned or out of focus.
- Shadowboard blocking the beam.
- Defective photocell.
- Defective amplifier or differential potentinometer not properly set.
- Improperly connected or defective photocell cable.

2. Surface light won't go out.

- Light shining or reflecting around shadowboard.
- Defective photocell.
- Defective amplifier.
- Defective photocell cable

3. Intermittent surface light or beam light.

- Chopper disc in projector not turning proper speed (15 volts DC at motor).
- Projector not aligned or out of focus.
- Defective photocell.
- Defective amplifier or differential potentinometer not properly set.
- Improperly connected or defective photocell cable.

If you suspect the problem to be in the photocell or the receiver amplifier, swapping it out with a known working unit is the only positive way to correct the problem.

Double Barrel Receiver Description

The "Double Barrel" Photocell Receiver is HTT latest addition to its line of infra-red receivers. The design of this unit allow it to replace either the Surface and/or Liner Photocell/Receiver Systems presently used on the MK VI, MK IV, MK III, MK II, and MK I. Tamper models.

NOTE: For MK III and earlier tamper models, an adaptor kit must be used.
This kit is available for purchase from HTT under HTT Part No. H7122YAA.
For MK IV and MK VI models, the Double Barrel Receiver Kit Part No. is 4008543.

The receiver's all inclusive design does away with the separate light detector and amplifier resulting in improved reliability and ease of installation. The design features a water tight cast aluminum enclosure, all glass optics, M12 electrical connections and indicator LEDs to monitor power and beam cut/uncut status.
Note: LEDs visible through window on bottom of receiver.

NOTE: LED is Green when Power is applied to unit (Green LED blinks OFF when Strobe Light is present). LED is Red when unit see's the projector beam.

The Double Barrel receiver employs two (2) light beam light detectors instead of one (1) as used in earlier receiver models. The first of these is called the Reference Detector. *(Top detector is shown in figure 5-24).* As the name implies, this detector will always see the light beam emitted from the projector. This is used to determine the optical conditions and compensate the measurements made by the cutoff detector.

The 2nd detector is called the Cutoff Detector, monitors the position of the shadow cast by the shadow board to determine if the beam is cut or not cut. *(Bottom detector as shown in figure 5-24)*

Unlike earlier Photocell Receivers, the Double Barrel has only one M12 cable connection and requires no adjustments. Only the normal calibration of the machine for work is required. This makes for quick set-up for work and removal for travel, if required.

For current production models, Double Barrel is optional for surfacing and standard for lining.

Additional Features

- All Solid State Electronics.
- Heavy Duty aluminum casting construction.
- All stainless steel fasteners with thread locker used throughout construction.
- ZORB-IT moisture controller device prevents damage to electronics from humidity and keeps internal optical surfaces (lens) free of fog.
- All glass optics.
- Reliable performance in low sun angles
- Immune to reflected light.
- Faster Recording speeds as a result of a smaller differential or movement of the Shadowboard from beam OFF to beam ON.
- Can be mounted in the same position as earlier receivers.

- Maintenance Free

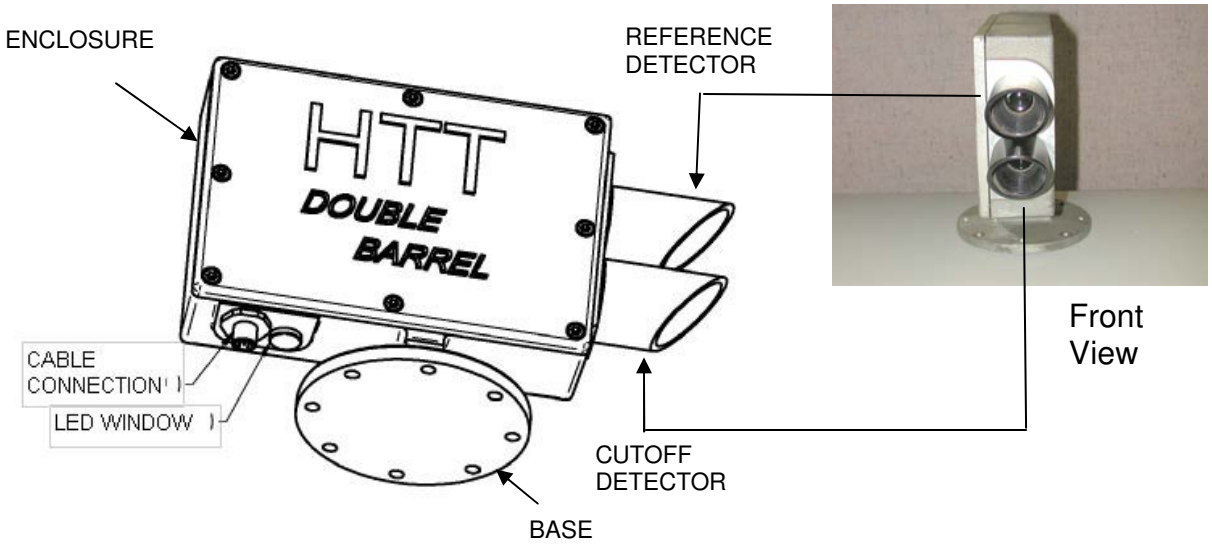

Figure 5-24

Double Barrel Receiver

Method of Operation:

In normal operation, the Reference detector is constantly illuminated by the projector. The shadow board cast a shadow across the cutoff detector. When this shadow is more than halfway across the cutoff detector lens, the internal electronics will switch the output from ON (beam is not cut) to OFF, signaling that the beam is cut.

This output is determined by the amount of projector sourced light falling on the cutoff detector versus the amount of projector sourced light falling on the reference detector. This method allows the receiver to deal with airborne dust, fog and reflections.

CHAPTER 6
TROUBLESHOOTING HYDRAULICS

TABLE OF CONTENTS
TROUBLESHOOTING HYDRAULICS

CHAPTER 6

Hydraulics 6-1
Variable Displacement Pump 6-3
Load Limiter (Pressure Compensator) 6-3
Pressure Compensated Flow Controls 6-4
Flow Control Set Up 6-4
Installation 6-6
Hydraulic Symbols 6-7
Hydraulic Schematic and Parts List.....6-10
P1 and P2 Pump Standby Pressure.....6-11
P1 and P2 Pump Max Compensator Pressure.....6-12
Vibrator Pumps 6-13
Valves 6-13

HYDRAULICS

Hydraulic power is the conversion of mechanical energy into fluid (hydraulic) power and reconverting this back into mechanical power. This system is used extensively in the railroad industry because of its many advantages. Some of these advantages are:

A. Relatively simple design
B. Flexibility and portability
C. Smoothness and quietness of operation
D. Easy to control
E. Relatively low cost
F. Automatic overload protection

Hydraulics is divided into two sciences. These are **hydrodynamics** and **hydrostatics**.

Hydrodynamics is the study of moving liquids. A water wheel or turbine is turned by the energy of fluids forced against blades or vanes. This system uses the energy stored in moving liquids to do work.

Hydrostatics use liquids in a confined area. The liquid must move or flow to cause motion, but the movement is incidental to the force output. The transfer of energy takes place because a quantity of liquid is subjected to pressure.

With the above information in mind, we must look at the practical aspects of hydrodynamics and hydrostatics. There are several terms of importance. Two of the most important are **pressure** and **flow**.

Pressure and flow are interrelated when considering hydraulics, however, each has its own particular job to do, and, has its own individual operating characteristics. Pressure is directly related to the force or power that is exerted in a hydraulic circuit.

Flow is responsible for movement, or, causes motion.

Both flow and pressure are normally present in any operable hydraulic circuit, and, one without the other, generally is of little use.

Since they do have their own individual operating characteristics, we must consider the study and troubleshooting of each one separately.

Flow - Flow is measured in G.P.M. (gallons per minute), and the instrument for measuring this is a flow meter. To check the flow in a particular circuit, the flow meter would have to be installed between the pump and the circuit being tested, or, in series with the load.

Normally, flow meters are quite expensive, and are relatively difficult to hook into a circuit. Therefore, these devices are rarely used.

Pressure - Pressure is the amount of force or the power being applied in a hydraulic circuit, and is measured in PSI (pounds per square inch) or BAR (Bar x 14.7 = PSI). The device for measuring pressure is the pressure gauge.

The pressure gauge is an inexpensive device, and can be easily installed in a circuit by means of quick disconnect fittings.

When troubleshooting hydraulic circuits, both the power (pressure) and the flow (G.P.M.) would have to be known to properly diagnose a hydraulic circuit problem.

If either the flow or the pressure were to change in a hydraulic circuit, the operating characteristic of that circuit would also change. Let's see how the circuit could be affected.

If the pressure were to drop, the machine would have less power to perform its duties. If the pressure dropped low enough, the machine functions would stop. If the pressure were increased above its normal setting, component damage could occur.

Now, let us see what would happen to the same circuit if the proper pressure were maintained, but the flow (G.P.M.) decreased.

If the flow decreased, the machine would simply slow down. It would still have the power (pressure) to do the work, but it would just do it slower. If the flow (G.P.M.) were increased, the machine would work faster. Although this may sound like an advantage, it could possibly do more harm, than good. As an example:

A. Cause machine to be too violent.
B. Cause valves and other components to stick.
C. Cause overheating.

A properly designed hydraulic circuit has the correct pressure and flows built in to do the work required of it.

NOTE: If you should have reason to change the circuit in any way, it should be approved by the equipment manufacturer first.

As we grow older, the wear and tear of living on our bodies tend to make us slow down. The same thing applies in hydraulic circuits.

In hydraulics however, the slow down is generally caused by aeration or cavitation. As with our bodies, we can accelerate or slow down this aging process by taking care of, or abusing the system.

Aeration and cavitation are caused by two different problems, but the resultant damage to the system is the same.

Aeration in hydraulic circuits is generally caused by a pump sucking air. This air can enter the system from either a defective inlet line or, the fluid level in the tank being too low. In either

case, the hydraulic system will be making a noise. This noise sounds like the pump is pumping marbles through the system.

This condition should be corrected as soon as possible to prevent wear and tear on the pump.

Cavitation is caused by a vacuum in the hydraulic fluid, and is prevalent in the pump when the inlet conditions are critical.

Pump cavitation may be caused by a restricted inlet line; by sharp bends in the inlet line; by a clogged inlet strainer; by a fluid that is too high in viscosity.

Cavitation in a circuit can generally be detected by listening to the system. Cavitation generates a high pitch screaming sound. This noise will increase as the degree of cavitation increases and the pressure increases.

To prevent cavitation in hydraulic circuits, the system should be warmed up at a slower speed than the system normally runs at. This warm up period will depend on the ambient temperature, type of oil used, pressure settings, number of pumps in system, etc.

The most common cause of cavitation however, is due to **improper warm up** of the system.

In both cavitation and aeration, the results is a shorter pump life.

When cavitation and/or aeration occurs, the pump immediately starts to lose flow. This loss is very minute in the beginning, but gradually gets worse. Strangely enough, the pressure is not affected as much as the flow.

Therefore, the end results is, the machine starts to slow down. It may still have the power to do the work, but, it just does it slower.

Variable Displacement Piston Pump

The hydraulic system on the MKIV is a closed center type with main system oil supplied by two variable displacement pressure compensated piston pumps. The pumps are mounted to a double pump drive and are driven directly from the engine. The pumps are left hand rotation (viewed from shaft end), each with a displacement of 6 cubic inch per revolution (54.55 GPM 2100 RPM).

Load Limiter (Pressure Compensator)

The pressure compensator control automatically varies pump displacement to provide only the flow required to satisfy the load demand while maintaining a constant preset pressure. The control begins to reduce pump displacement upon system pressure rise of approximately 100 PSI below the compensator setting. At system pressure below the compensator setting, the pump operates at maximum displacement and at the load pressure.

This pressure compensator or "constant pressure control" is a spring offset, 3-way valve. Its purpose is to limit system pressure to some desired preset level by varying pump displacement to create only sufficient flow to meet the load requirement.

Pressure Compensated Flow Controls

In combination with the pressure compensated pumps, pressure compensated flow controls are used throughout the hydraulic circuit on the **MK IV** Tamper. Pressure compensated flow controls provide a means whereby various flows throughout the hydraulic circuit can be adjusted, while maintaining a constant pressure across the system. The system pressure is maintained despite varying load requirements. The symbol for a pressure compensated flow control is shown below in figure 6-2.

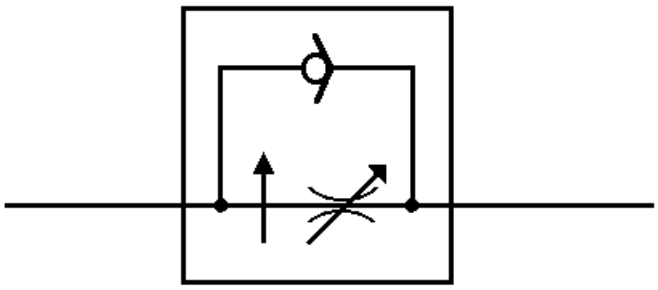

Figure 6-2

MK IV Flow Control Setup (*Should be done after replacement ONLY)*

Right Hand Workheads

- HT 34.1: Downfeed cartridge open 5 turns
  Upfeed cartridge open 5 turns
- HT 34.2: Downfeed cartridge open 5 turns
  Upfeed cartridge open 4 turns

Left Hand Workheads

- HT 34.3: Downfeed cartridge open 5 turns
  Upfeed cartridge open 5 turns
- HT 34.4: Downfeed cartridge open 5 turns
  Upfeed cartridge open 4 turns

Start commissioning the machine with the these settings. Work the machine until the hydraulic oil is at operating temperature while observing workhead upfeed speed. If one side upfeeds faster than the other, turn the flow control (initial setting of 4 turns) on the fast side, clockwise until both sides upfeed at the same speed.

Right Jacking Valve

- HT30.1 Fully open
- HT29.1 With the upper limit switch arm positioned so as to not make any contact, lower the hooks completely. Adjust the spool stop so that the time required to fully retract the jack cylinder is 3.8 to 4.0 seconds. Reposition the upper limit switch arm.

Left Jacking Valve

- HT30.2 Fully open
- HT29.1 Adjust the spool stop so that the jacking speed matches the right side.

Note: This procedure is done in the factory and normally the only adjustment necessary is to adjust the slower side spool stop to match the faster side.

It is important that jacking speed is controlled and that both jack cylinders move at the same speed to assure accurate surface cut off.

Right Hook Regen

* HT 25.6 open 1 1/2 turns.

Left Hook Regen

- HT 25.1 open 1 1/2 turns.

Start commissioning at 1 1/2 turns. Open to 2 1/2 turns MAXIMUM if necessary.

Right Hook Clamp Valve

- HT 25.5 open 3 turns.

Left Hook Clamp Valve

- HT 25.2 open 3 turns.

Work machine while observing the hook extend speed. The hooks should open fast enough to clear any track obstruction. If necessary open HT 25.5 or HT 25.2 (counter-clockwise) until the hooks clear all normal track obstructions.

Installation

The pressure compensated flow controls used on the MKIV tamper are installed as a **meter-in** flow control. This simply means that the flow on the **pressure** or "in" side of the circuit is being controlled. A meter-out valve controls flow on the tank or "out" line. Since the valve used on the MKVI can also be used in the meter-out configuration by rotating 180 degrees, care must be taken to ensure that the meter-in notch on the flow control is installed facing the solenoid valve. See Figure 6-3.

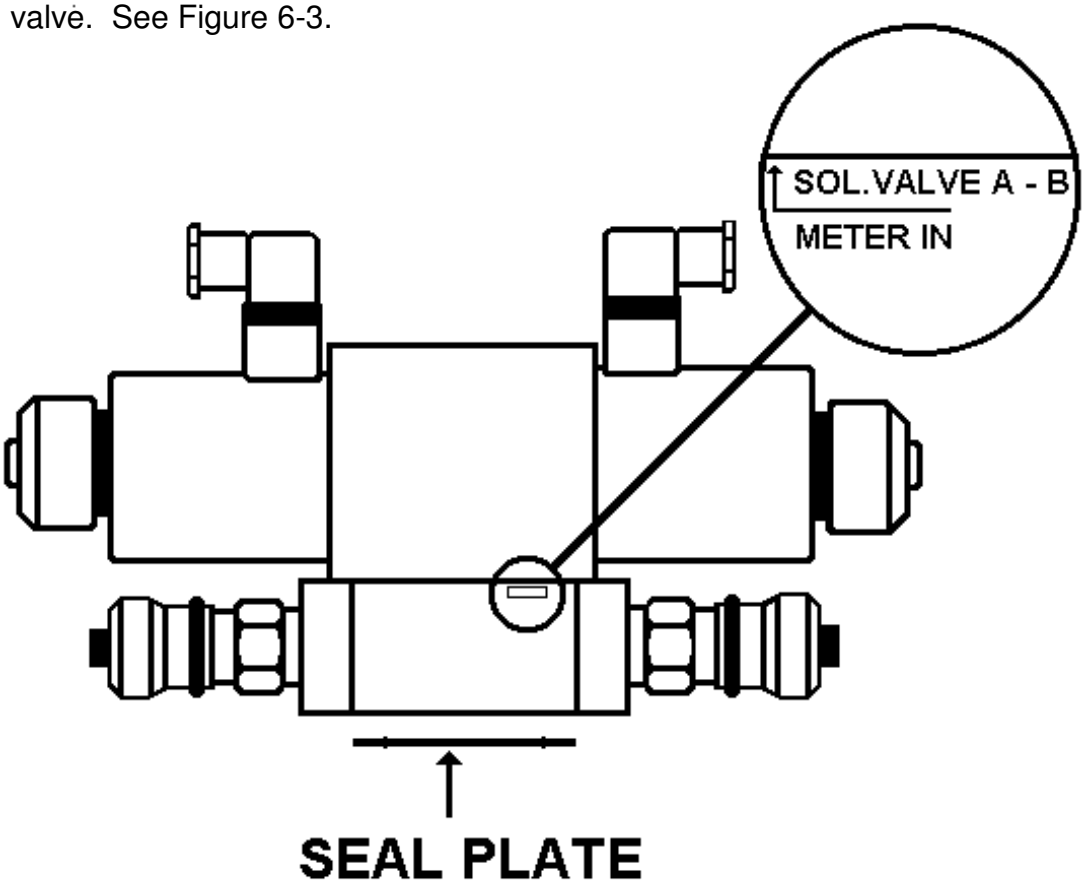

Figure 6-3

Hydraulic Symbols

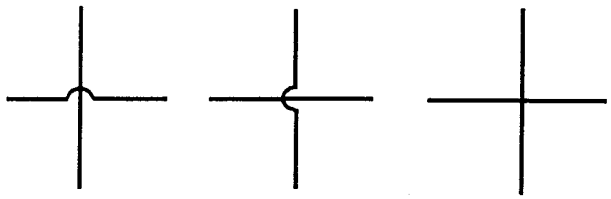

Lines Crossing But Not Connecting

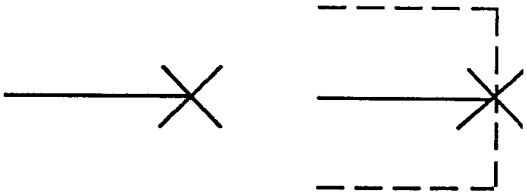

Plugged Port

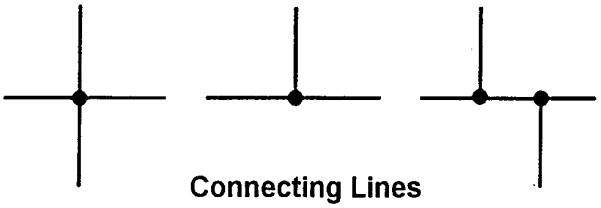

Connecting Lines

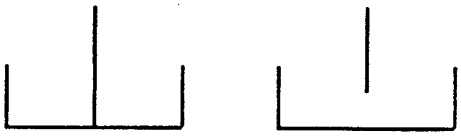

Below Oil Level Above Oil Level

Hydraulic Reservoir

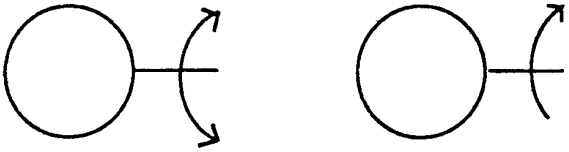

Bidirectional Unidirectional

Rotating Shafts

Quick Disconnect

Working LIne

Pilot Line

Drain Line

Fluid Conductors

Check Valve

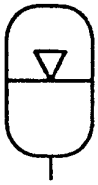

Accumulator

Hydraulic Symbols

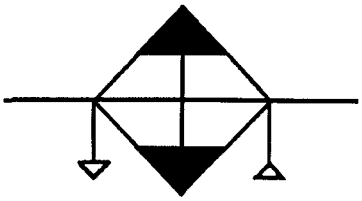

Oil Cooler

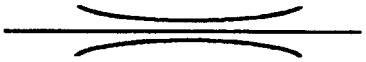

Fixed Restrictor

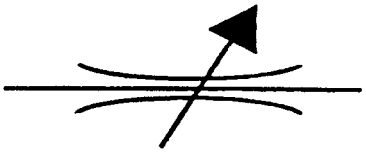

Variable Restrictor

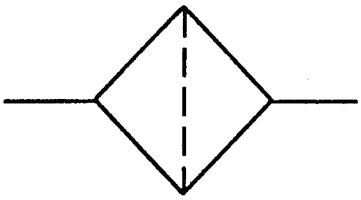

Filter Or Strainer

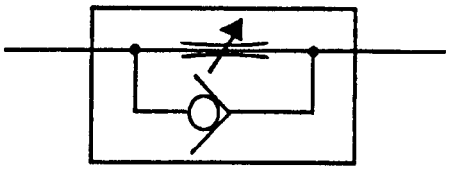

Flow Control

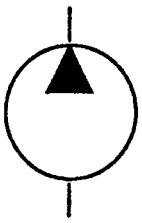

Unidirectional Pump

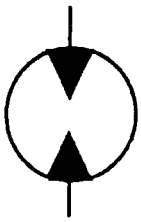

Bidirectional Motor

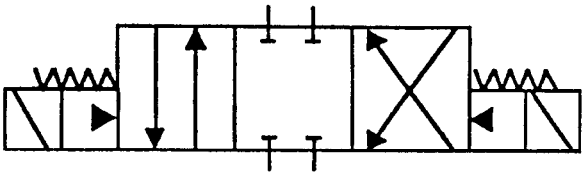

Control Valve

Pressure Switch

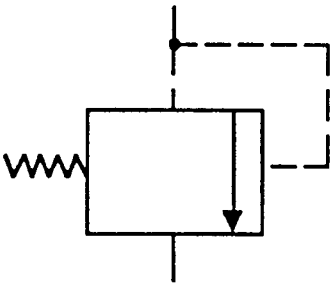

Relief Valve

Hydraulic Schematic Parts List

The information circled on the hydraulic schematic is reference information pertaining to the parts list below. The numbers in the circle indicate the item number and the accumulative quantity. See figure and example parts list shown below.

Item number on parts list.

At least 2 per machine. (If there is no number, the machine has only one).

*******Example Parts List - See Parts Manual for Ordering*******

ITEM NO	PART NUMBER	DESCRIPTION	
1	D4346Y01	PISTON PUMP (4.5 CI MAX)	✓
2	C0993Y01	SOL.VALVE 4/3 D03 24VDC	✓
3	A1070Y29	RELIEF SWCH. D03	✓
4	0-3361006-0-03	SUBPLATE D01 6SAE	✓
5	0-3336021-0-18	CHECK VALVE 3PSI 16 SAE	✓
6	L41208	CHECK VALVE 3PSI 1/4 NPT	✓
7	L41228	QUICK DISCONNECT 1/4 NPT	✓
8	A0758Y06	ORIFICE FITTING 0.031	✓
9	A0758Y14	ORIFICE FITTING 0.125	✓
10	A0713Y11	DOUBLE GEAR PUMP	✓
11	0-3321014-0-04	PISTON MOTOR FIXED DISP	✓
12	C1140Y04	RELIEF VALVE	✓
13	0-3336003-0-02	CHECK VALVE SWCH D05	✓
14	0-3333037-0-08	SOL VALVE 4/2/D05 24VDC	✓
15	L40549	CHECK VALVE 3PSI 3/4NPT	✓
16	A3448Y09	GEAR PUMP	✓
17	B4376Y03	FILTER ELEMENT (5 MICRON)	✓
18	H5458WAB	OIL COOLER ASSEMBLY	✓
19	C9249Y05	RETURN FILTER	✓
20	A0757Y04	MANIFOLD D02 4 STATION	✓
21	0-3333037-0-09	SOL VALVE 4/3 D02 24VDC	✓
22	0-3333037-0-18	SOL VALVE 4/3 D02 24VDC	✓
23	0-3333037-0-10	SOL VALVE 4/2 D02 24VDC	✓
24	0-3334013-0-05	PR REDUCING VALVE D02	✓
25	0-3335024-0-11	FLOW CONTROL SWCH D02	✓
26	A1070Y19	DUAL RELIEF SWCH D02	✓

HYDRAULIC SCHEMATIC

DRAWING

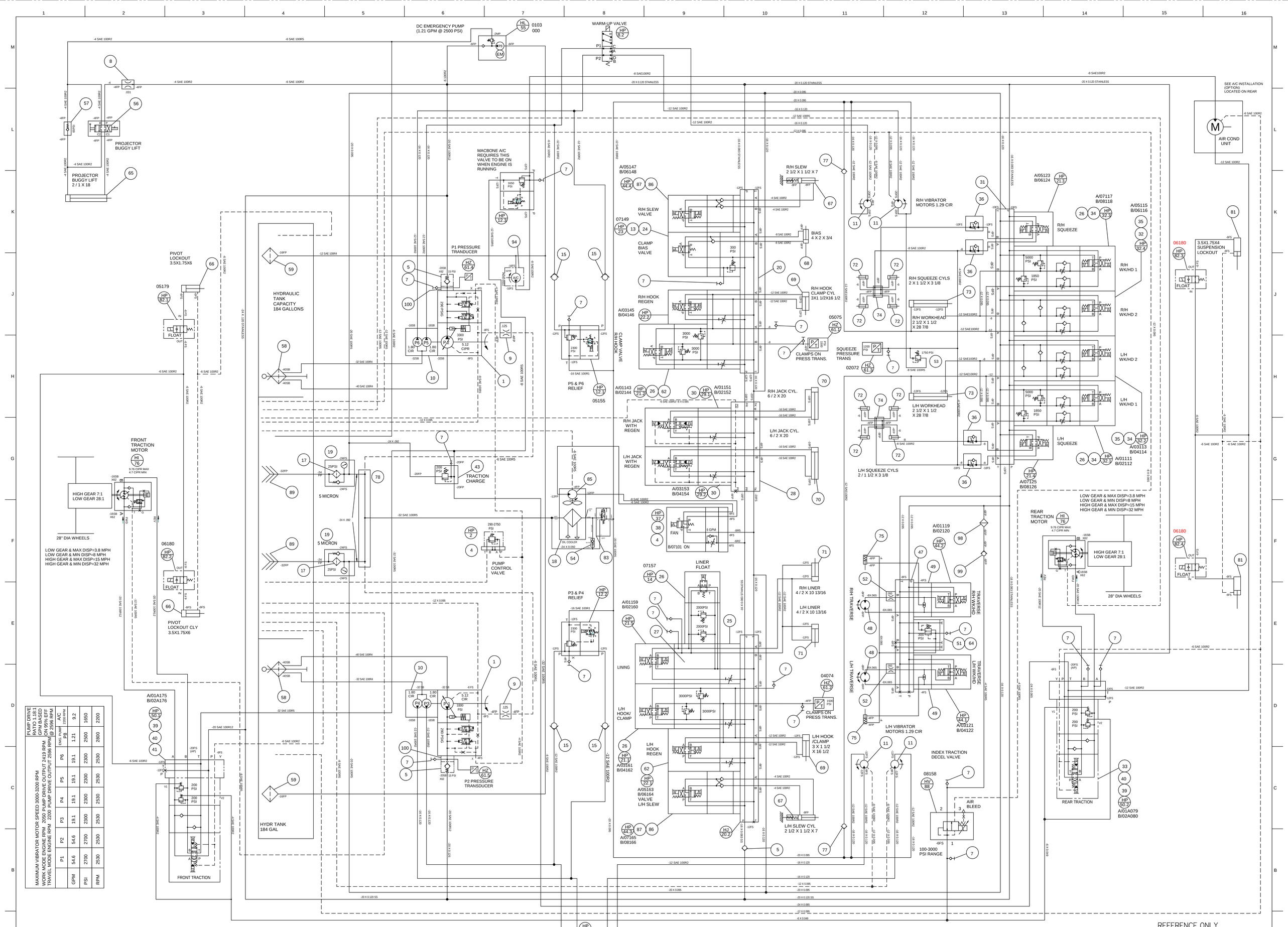

MAXIMUM VIBRATOR MOTOR SPEED 3000-3200 RPM											PUMP DRIVE RATIO 1.18:1
WORK MODE ENGINE RPM 2050 PUMP DRIVE OUTPUT 2419 RPM											OW RAC SPEED
TRAVEL MODE ENGINE RPM 2200 PUMP DRIVE OUTPUT 2596 RPM											OW RAC SPEED @ 2596 RPM
											A/C
											EMG. PUMP
											2200 RPM
	P1	P2	P3	P4	P5	P6	P8				
GPM	54.6	54.6	19.1	19.1	19.1	19.1	1.21				9.2
PSI	2700	2700	2300	2300	2300	2300	2500				1650
RPM	2530	2530	2530	2530	2530	2530	2800				2200

CONFIDENTIAL
© COPYRIGHT 2001 HARSCO TRACK TECHNOLOGIES. THIS DRAWING OR DOCUMENT IS THE PROPERTY OF HARSCO TRACK TECHNOLOGIES AND EMBODIES CONFIDENTIAL INFORMATION, TRADE SECRET INFORMATION, AND/OR KNOW-HOW THAT IS THE PROPERTY OF HARSCO TRACK TECHNOLOGIES. BY ACCEPTING THIS DRAWING OR DOCUMENT, THE RECIPIENT AGREES (1) NOT TO PROVIDE, OR OTHERWISE MAKE AVAILABLE, THE DRAWING OR DOCUMENT, OR ANY INFORMATION OR KNOW-HOW EMBODIED THEREIN, TO ANY THIRD PARTY AND (2) NOT TO REPRODUCE OR USE THE DRAWING OR DOCUMENT TO MANUFACTURE ANY APPARATUS OR DEVICE, WITHOUT THE PRIOR WRITTEN AUTHORIZATION OF HARSCO TRACK TECHNOLOGIES.

IMPLIED TOLERANCES
ALL DIMENSIONS ARE IN INCHES - TOLERANCE UNLESS OTHERWISE SPECIFIED

NOMINAL SIZE RANGE	INCH PLUS OR MINUS		METRIC PLUS OR MINUS	
OVER	TO	1 PLACE DECIMAL	2 PLACE DECIMAL	OVER	TO	1 PLACE DECIMAL	2 PLACE DECIMAL
0	6	.03	.005	0	150	.8	.13
6	24	.04	.008	150	600	1.0	.20
24	-	.06	.010	-	600	1.5	.25

UNLESS OTHERWISE SPECIFIED ALL MACHINED SURFACES WILL HAVE:
A SURFACE FINISH OF 125 MICROINCHES
ANGULAR TOLERANCE OF ± 30'
CONCENTRICITY WITHIN .010
UNLESS OTHERWISE SPECIFIED ALL WELDS SHOULD BE MADE TO AWS STANDARDS WITH WELD PAD SPECIFICATION 101
THIRD ANGLE PROJECTION

CHANGE	R/L	REVISION	DATE
EC501460	A	RELEASE	7/11/11

Description: HYDRAULIC SCHEMATIC
Drawing Number
Machine Type: MK IV
Model
Drawn: gmancini
Date: 7/11/11
Weight
Scale:
APVD Eng. BPA
APVD Mktg. BPA
Part Number: 5009422
Size: E
Sheet: 1 of 2

HTT
Harsco Track Technologies
Harsco
Columbia, SC

Plotted by eparter on 7/29/2011 5009422.dft

ITEM NO	PART NUMBER	DESCRIPTION	QUANTITY
1	5005833	PUMP, VAR VOL PISTON	
2	4029520	VALVE, PROP. PRESS RELIEF	*
3			*
4	0-3361006-0-03	SUBPLATE DO1 6SAE	*
5	3400678	CHECK VALVE 15 PSI -16 CODE 61	*
6	L41208	CHECK VALVE 3PSI 1/4 NPT	*
7	L41228	QUICK DISCONNECT 1/4 NPT	*
8	5007825	VALVE, 2 POS 6 WAY	*
9	187901	ORIFICE FITTING 0.125	*
10	4029715	PUMP, DBL GEAR	*
11	4012702	MOTOR, PISTON	*
12	C1140Y04	RELIEF VALVE	*
13	0-3336003-0-02	CHECK VALVE SWCH DO5	*
14	0-3333037-0-08	SOL VALVE 4/2/DO5 24VDC	*
15	L40549	CHECK VALVE 3PSI 3/4NPT	*
16			*
17	D4376Y03	FILTER ELEMENT (5 MICRON)	*
18	4001051	OIL COOLER ASSEMBLY	*
19	C9249Y05	RETURN FILTER	
20	A0757Y04	MANIFOLD DO2 4 STATION	*
21	0-3333037-0-09	SOL VALVE 4/3 DO2 24VDC	*
22	0-3333037-0-18	SOL VALVE 4/3 DO2 24VDC	*
23	0-3333037-0-10	SOL VALVE 4/2 DO2 24VDC	*
24	0-3334013-0-05	PR REDUCING VALVE DO2	*
25	0-3335024-0-11	FLOW CONTROL SWCH DO2	*
26	A1070Y19	DUAL RELIEF SWCH DO2	*
27	C3759W02	DO5 SWCH ADAPTER	*
28	A0963Y01	MANIFOLD DO6 2 STATION	*
29	A4490Y07	SOL VALVE 4/3 DO6 24VDC	*
30	B9529Y01	FLOW CONTROL SWCH DO6	*
31	0-3360012-0-05	MANIFOLD DO2 6 STATION	*
32	0-3333037-0-19	SOL VALVE 4/3 DO2 24VDC	*
33	D6328X01	SUBPLATE D08 (-20 SAE)	*

ITEM NO	PART NUMBER	DESCRIPTION	QUANTITY
34	0-3335024-0-12	DUAL FLOW SWCH DO2	*
35	0-3336002-0-01	ANTICAV CHECK SWCH. DO2	*
36	0-3335012-0-01	FLOW CONTROL, 10SAE	*
37	C0993Y07	DIR VALVE 2POS DO3	
38	0-3335031-0-15	FLOW CONTROL D03	
39	A2803Y04	ANTICAV CHECK SWCH DO6	*
40	0-3334057-0-07	DUAL RELIEF SWCH. DO6	*
41	0-3361004-0-05	SUBPLATE, DO6, -20 SAE	*
42			*
43	0-3334011-0-06	RELIEF VALVE 1 1/4 NPT	*
44	C0993Y03	SOL.VALVE 4/3 DO1 24VDC	*
45	0-3334012-0-08	RELIEF SWCH. DO1 (B-T)	*
46	C0613Y07	REDUCING/RLV. SWCH. DO1	*
47	0-3364012-0-02	MANIFOLD, DO1, 3 STN.	*
48	L411545	GEROTOR MOTOR	*
49	C0674Y01	SHUTTLE VALVE,DO1 SWCH	*
50	A4490Y03	SOL.VALVE,4/3,DO6, 24VDC	*
51	C0613Y01	REDUCE/RELIEF DO1 SWCH	*
52	0-3304175-0-11	ORIFICE FITTING (Ø.093)	*
53	0-3334049-0-12	RELIEF VALVE	
54	L425375	CHECK VALVE 65 PSI	
55	0-3316003-0-04	EMERGENCY PUMP, 24VDC	*
56	L410606	ROTARY CONTROL 1/4NPT	*
57	0-3336021-0-33	CHECK VALVE,65PSI,1/4NPT	*
58	D4176Y01	SUCT STR, 2 1/2 4-BOLT	*
59	0-3351002-0-01	SUCTION STRAINER 1" NPT	*
60	0-3380000-0-04	FLOW DIFFUSER, 2 NPT	*
61	4008374	PRESSURE TRANS KIT	*
62	H2247Y01	DUAL FLOW REG ASSY	*
63	A0730Y04	SOL. VALVE	*
64	0-3360011-0-06	MANIFOLD BLANKING PLT	*
65	G7733YAA	CYL. W/ROD ENDS(2 X 1 X 18)	Projector Buggy Lift System
66	340311-1	HYD CYL 3.5X1.75X6	CYL. PIVOT LOCKOUT

ITEM NO	PART NUMBER	DESCRIPTION	QUANTITY
67	B7036WAC	CYLINDER, SLEW	Slew
68	B5705XAB	CYLINDER, BIAS	Bias
69	B5708XAA	CYLINDER, HOOKS	Hooks
70	B5715XAE	CYLINDER, JACKS	Jacks
71	B5705XAF	CYLINDER, LINER	Liner
72	X68297	CYLINDER, SQUEEZE	Squeeze
73	B5761XAA	CYLINDER, WORKHEAD	Workheads
74	Y766772Y	SQUEEZE MANIFOID	Squeeze
75	0-3372001-0-01	CYLINDER, LOCKOUT	Wk/Hd Lockout
76	5006667	MOTOR, VAR VOL PISTON	Traction Motor
77	0-3336021-0-07	CHECK VALVE (5 PSI)	Workheads Anti-cavitation
78	4001209	MANIFOLD	Cooler Return
79			
80			
81	330840-1	HYD CYL 3.5x1.75x4	Suspension Lockout
82	A0729Y06	VALVE 2 WAY SOL OP	Suspension Lockout
83	4001118	THERMAL BYPASS VALVE	Oil Cooler
~~84~~	~~A1556Y21~~	~~TEMP SWITCH~~	~~Oil Cooler~~
85	C7376Y04	HYD MOTOR	Oil Cooler
86	0-3360011-0-03	DO3 TO DO5 ADAPTOR	Slew
87	0-3336024-0-07	CHECK VALVE SWCH DO3	Slew
88	D8305Y01	PRESSURE REDUCING VALVE	Traction Decel (Electric)
89	0-3380000-0-03	FLOW DIFFUSER 2 1/2 NPT	Hydraulic Tank
90			
91			
92			
93			
94	B9932Y10	GEAR PUMP	Traction, AC
95			
96	0-3336024-0-02	SANDWICH CHECK VALVE, D03	Suspension Lock Out
97			
98	A5748Y01	FILTER	Traction Decel Pilot
99	L41209	CHECK VALVE	Traction Decel Pilot
100	F024596	GAGE PORT ADAPTOR	

REFERENCE ONLY

SOLID EDGE DRAWING

CONFIDENTIAL
© COPYRIGHT 2001 HARSCO TRACK TECHNOLOGIES. THIS DRAWING OR DOCUMENT IS THE PROPERTY OF HARSCO TRACK TECHNOLOGIES AND EMBODIES CONFIDENTIAL INFORMATION, TRADE SECRET INFORMATION, AND/OR KNOW-HOW THAT IS THE PROPERTY OF HARSCO TRACK TECHNOLOGIES. BY ACCEPTING THIS DRAWING OR DOCUMENT, THE RECIPIENT AGREES (1) NOT TO PROVIDE, OR OTHERWISE MAKE AVAILABLE, THE DRAWING OR DOCUMENT, OR ANY INFORMATION OR KNOW-HOW EMBODIED THEREIN, TO ANY THIRD PARTY AND (2) NOT TO REPRODUCE OR USE THE DRAWING OR DOCUMENT TO MANUFACTURE ANY APPARATUS OR DEVICE, WITHOUT THE PRIOR WRITTEN AUTHORIZATION OF HARSCO TRACK TECHNOLOGIES.

IMPLIED TOLERANCES
ALL DIMENSIONS ARE IN INCHES - TOLERANCE UNLESS OTHERWISE SPECIFIED

INCH NOMINAL DIMENSION		PLUS OR MINUS 2 PLACE DECIMAL	3 PLACE DECIMAL	METRIC NOMINAL DIMENSION		PLUS OR MINUS 1 PLACE DECIMAL	2 PLACE DECIMAL
OVER	TO			OVER	TO		
0	6	.03	.005	0	150	.8	.13
6	24	.04	.008	150	600	1.0	.20
24	-	.06	.010	-	600	1.5	.25

UNLESS OTHERWISE SPECIFIED ALL MACHINED SURFACE FINISH IS 125 MICROINCHES
ANGULAR TOLERANCE OF ± 30'
CONCENTRICITY WITHIN .010

THIRD ANGLE PROJECTION

UNLESS OTHERWISE SPECIFIED ALL WELDS SHOULD ADHERE TO THE LATEST HTT WELDING SPECIFICATION [0]

CHANGE	R/L	REVISION	DATE
EC501460	A	RELEASE	7/11/11

Description: HYDRAULIC SCHEMATIC
Drawing Number
Model
Weight
Scale
Machine Type: MK IV
Drawn: gmancini
Date: 7/11/11
APVD ENG: BPA
APVD ENG: BPA
Part Number: 5009422
Size: E
Sheet: 2 of 2

HTT
Harsco Track Technologies
Harsco
Columbia, SC

Plotted by eparter on 7/29/2011 5009422.dft

P1 and P2 Pump Standby Pressure 200 - 300 PSI

NOTE: Pumps are preset at the factory. Follow this procedure ONLY when replacing a pump.

1. Install a 5000 PSI hydraulic pressure gauge on the quick disconnect coupler located on the pump outlet line. Start with either of the two compensated pumps.

2. Start the engine. Refer to section 2 for information regarding engine and cab controls.

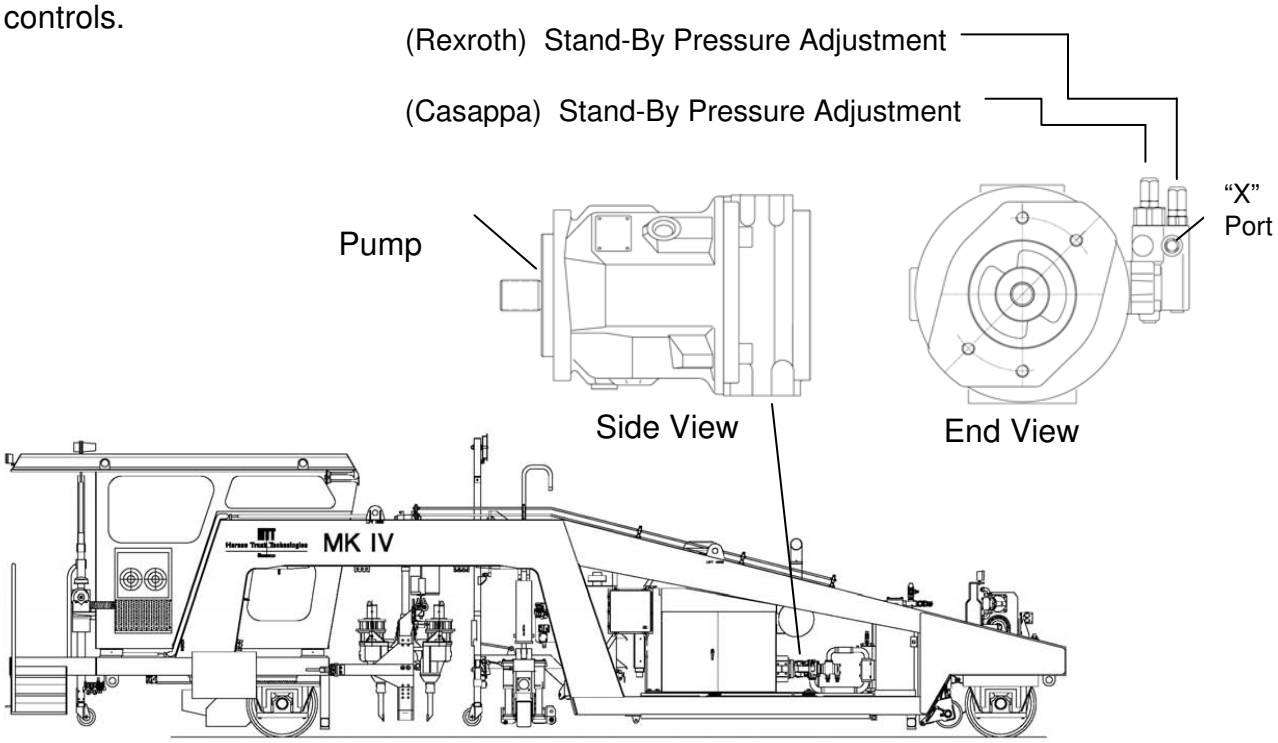

Figure 6-7

3. Adjust the standby pressure by turning the adjusting screw clockwise to increase and counter-clockwise to decrease. Set the pressure to 200 -300 PSI. See figure 6-7.

NOTE: If the standby pressure is too low system instability can occur.

4. Shut the engine down.

5. Remove the pressure gauge and re-install on the second compensated pump. Repeat the above procedure for the second pump.

P1 and P2 Pump Maximum (Compensator) Pressure 3300 PSI.

NOTE: Pumps are preset at the factory. Follow this procedure ONLY when replacing a pump. More than one person will be required to set the pressures on the machine.

Procedure:

1. Install a 5000 PSI hydraulic pressure gauge on the quick disconnect coupler located on the pump outlet line. Start with either of the two compensated pumps.

2. Remove hoses from the "X" Port and plug . *" X " Port is – 4ORB and Hose is - 4 JIC.*

3. Start the engine.

4. Adjust the compensator pressure on both pumps by turning the adjusting screw clockwise to increase and counter-clockwise to decrease. Set the pressure to 3300 PSI. Refer to figure 6-8.

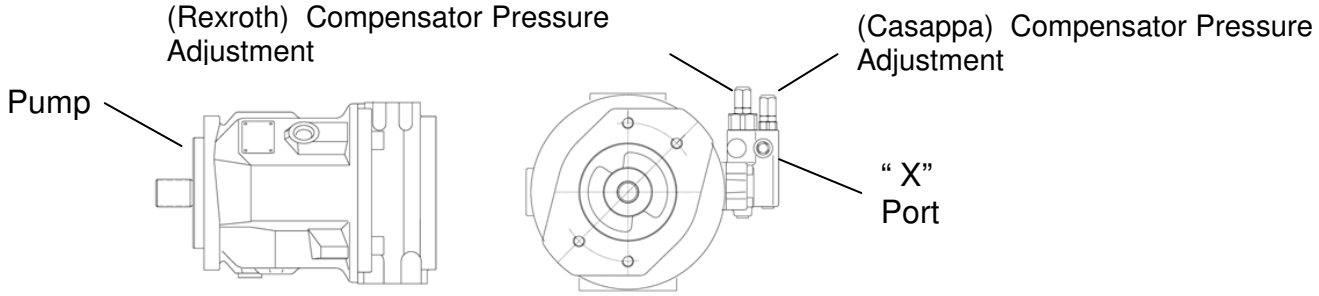

Figure 6-8

5. Reconnect hoses to the " X" Port..

Vibrator Pumps 2300 PSI

NOTE: Follow this procedure ONLY when replacing a pump.

Procedure:

1. Remove the vibrator hoses at the motor and cap the lines.
2. Install a 3000 PSI pressure gauge on the left or right vibrator relief valve. The relief valve is located near the radiator near the engine compartment.
3. Start the engine, turn the computer ON and place the WORK/TRAVEL switch into the WORK position. Refer to section 2 for information regarding engine and cab controls.
4. Turn the left or right vibrator motors on. Adjust the relief valve by turning the adjusting screw clockwise to increase and counter-clockwise to decrease. Set the pressure to 2300 PSI.
5. Repeat for opposite side.

Valves

NOTE: Valves are preset at the factory. Follow this procedure ONLY when replacing relief valves.

NOTE: More than one person will be required to set the valve relief pressures.

In order to set the valve pressure reliefs it will be necessary to raise the pump compensator settings temporarily to 3100 PSI. Follow the Set-up procedure . ***Software Dept to provide.***

Right and Left Hook Relief 3000 PSI

- Manually energize the left and right hook valves in each direction and adjust the pressure relief valves to 3000 PSI. Turn the adjusting screw clockwise to increase and counter-clockwise to decrease.

Liner Valve 2000 PSI

- Manually energize the liner valve in each direction and adjust the pressure as necessary. Turn the adjusting screw clockwise to increase and counter-clockwise to decrease. Set the pressure to 2000 PSI.

Bias Pressure 300 PSI

- Manually energize the bias valve and adjust the pressure as necessary. Turn the adjusting screw clockwise to increase and counter-clockwise to decrease. Set the pressure to 300 PSI.

Workhead Pressure (downfeed) 1850 PSI

- Energize the workhead downfeed valves and adjust the pressure as necessary. Turn the adjusting screw clockwise to increase and counter-clockwise to decrease. Set the pressure to 1850 PSI.

Workhead Pressure (upfeed) 5000 PSI

- Screw the relief valve all the way in and back out 1/2 turn. This will give a pressure setting of 5000 PSI + or - 500 PSI.

Adjust the remaining valves as necessary

- Workhead traverse lock 300 PSI
- Front pivot frame lockout 450 PSI.

When valve adjustments are complete, exit the set-up procedure, shut down engine and remove the pressure gauge.

Travel Valve

NOTE: The reliefs are non-adjustable.

CHAPTER 7
TROUBLESHOOTING ELECTRICAL

TABLE OF CONTENTS
TROUBLESHOOTING ELECTRICAL

CHAPTER 7

Electrical System 7-1
Power Distribution Box (PDB) 7-1
Master Control Box (MCB) 7-4
Jupiter Module Locations 7-9
Electrical Schematic Reading 7-10
Electrical Schematics 7-12

Electrical System

This section contains a brief overview of the 24 volt DC power system used on the MKIV Tamper. Power to the DC circuits is distributed through several electrical boxes,at various locations on the machine. Abbreviations are used for these boxes in many portions of the discussion and on the schematics. Only selected boxes will be discussed. Listed below are the abbreviations used. Refer to Figure 7-1 and the electrical schematic for details.

- Power Distribution Box PDB
- Front Control Panel FCP
- Left Hand Console LHC
- Master Control Box MCB
- Right Hand Console RHC

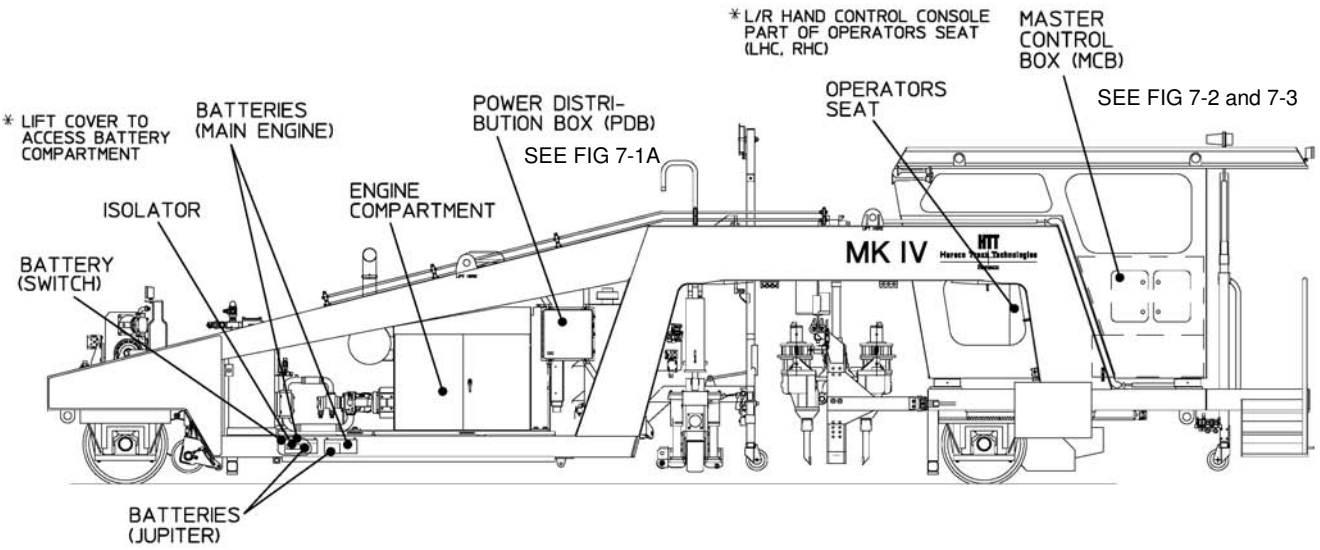

Figure 7-1

Power Distribution Box (PDB)

The Power Distribution Box is located on the left side of the machine (refer to figure 7-1) and contains various electrical components such as relays, circuit breakers, diode modules and terminal blocks.

The following is a list of PDB components:

Power Relay K1295 – Computer ON 1

Power Relay K1304 – Computer ON 2

Power Relay K2180 – Work Lights

CB 1460 - 1 AMP – Engine 9 Pin Power

CB 2600 - 20 AMP - Protects Work Box Lights

CB 6120 - 10 AMP - Protects Hydraulic Top Off Pump (Optional)

CB 4450 - 15 AMP – Protects Can # 07 Power

CB 4460 - 15 AMP - Protects Can # 08 Power

CB 4470 – 15 AMP – Protects Can # 09 Power

CB 4480 - 15 AMP - Protects Can # 10 Power

CB 4490 - 15 AMP - Protects Can # 11 Power

CB 4500 – 15 AMP - Protects Can # 12 Power

CB 4510 - 15 AMP - Protects Can # 13 Power

CB 4520 - 8 AMP - Protects Can # 14 Power

CB 4530 - 15 AMP - Protects Can # 15 Power

CB 4540 – 15 AMP - Protects Can #16 Power

TB 30 - Terminal Block

CB 1120 - 125 AMP – Protects Power Distribution Box (PDB) Power

CB 1130 – 125 AMP – Protects Master Control Box (MCB)Power

CB 1450 – 125 AMP – Protects Grid Heater Power

TB 31 - Terminal Block

TB 32 - Terminal Block

CB 4550 – 8 AMP - Protects Can # 17 Power

CB 4560 – 8 AMP - Protects Can #18 Power (Optional)

TB-PWR1 –

TB-PWR2 -

TB-PWR2A -

TB-PWR3 -

TB-PWR3A

TB-GND1

TB-GND1A

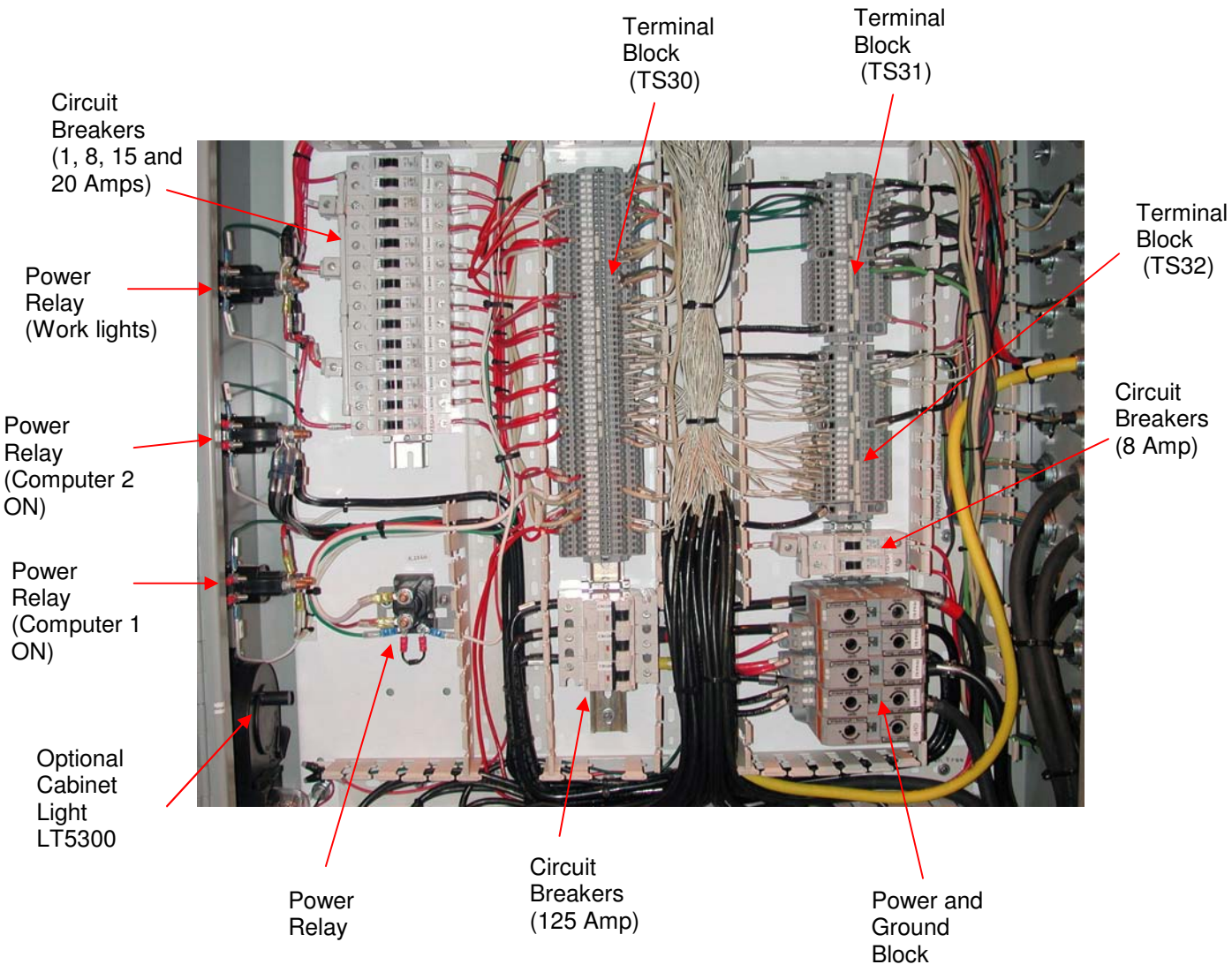

Power Distribution Box (PDB) - Inside View
Fig. 7-1A

Power Distribution Assembly (PDB)
Dwg No. 5007952

PRODUCT STRUCTURE

	ITEM	PART #	QTY	PART DESCRIPTION	
	10	6104	2	TERMINAL, RING	: 5/16" RING, 8 AWG, INSULATED
	20	172164	3	RELAY, POWER	: SPNO 100A 24VDC COIL
	30	405600	1	DIN RAIL	: 11.5" DIN RAIL
	40	409760	2	TERMINAL, RING	: 5/16" RING, 4 AWG, NON-INSULATED
	50	3402461	4	TERMINAL BLOCK	: 2 CONDUCTOR #4 AWG - #4/0 AWG GREY
	60	3402462	1	TERMINAL BLOCK, JUMPER	: FOR 3402461 TERMINAL BLOCK
	70	3402469	3	TERMINAL BLOCK, AD	: 2 CONDUCTOR AWG 24-6 GREY ADAPTER
	80	3405992	1	WIRE DUCT	: WIRE DUCT W/COVER 2" X 2.9" X 6.56'
	90	3405993	1	WIRE DUCT	: WIRE DUCT W/COVER 3" X 2.9" X 6.56'
	100	3406649	15FT	WIRE	: 16AWG / GREEN, TYPE MTW
	110	3407028	5FT	WIRE	: 10AWG / RED, TYPE MTW
	120	3413146	40FT	WIRE	: 12AWG / RED, TYPE MTW
	130	4011819	90	TERMINAL BLOCK	: 20-10AWG, 4 CONDUCTOR, DIN RAIL, GRAY
	140	4011820	5	TERMINAL BLOCK, END PLATE	: FOR 4011819 TERMINAL BLOCK
	150	4011821	12	TERMINAL BLOCK, JUMPER	: JUMPER BAR FOR 2 TERMINAL BLOCKS 32A
	160	4011823	2	TERMINAL BLOCK, JUMPER	: JUMPER BAR FOR 4 TERMINAL BLOCKS 32A
	170	4011824	6	TERMINAL BLOCK, JUMPER	: JUMPER BAR FOR 5 TERMINAL BLOCKS 32A
	180	4011832	6	TERMINAL BLOCK	: 20-6AWG, 2 CONDUCTOR, DIN RAIL, GRAY
	190	4011833	6	TERMINAL BLOCK, END PLATE	: FOR 4011832 TERMINAL BLOCK
	200	4011838	8	TERMINAL BLOCK, JUMPER	: STEP-DOWN FOR 2 TERMINAL BLOCKS 57A
	210	4016767	0.96	DECAL	: TERMINAL BLOCK MARKER STRIP
C	220	4019171	22	TAGS, CABLE	: PLASTIC CABLE TAG SLEEVE
	230	4029705	1	ENCLOSURE, MACHINED	: DRILLED PANEL FOR MARK IV (PDB)
	240	0-3212004-0-32	25FT	CABLE, SINGLE CONDUCTOR	: 4 AWG, BLACK 600V, WELDING CABLE
C	250	A1278Y08	21	CABLE GRIP	: CABLE FROM: 0.200 - 0.300" 1/2" NPT 90°
C	260	A1278Y10	7	CABLE GRIP	: CABLE FROM: 0.300 - 0.400" 1/2" NPT 90°
	270	A1278Y13	1	CABLE GRIP	: CABLE FROM: 0.400 - 0.500" 3/4" NPT 90°
	280	A1278Y15	2	CABLE GRIP	: CABLE FROM: 0.700-0.800" 3/4" NPT 90°
	290	A1278Y18	2	CABLE GRIP	: CABLE FROM: 0.600-0.700" 1" NPT 90°
	300	A1563Y04	31	INSERT, THREADED	: #10X24 PLATED STEEL
	310	A9297Y03	10FT	WIRE	: 16 AWG - WHITE WIRE TYPE-SXL
	320	A9297Y05	5FT	WIRE	: 12 AWG - WHITE WIRE TYPE-SXL
	330	B0971T24	2	DIN RAIL	: 21.0" DIN RAIL
	340	B1382Y08	8	END CAP	: FOR SIEMENS BUS BAR
	350	B1382Y09	4	BUSS CONNECTOR	: FOR SIEMENS 80 AMP BUS BAR #12 UP TO #2 AWG
	360	C9678Y10	9	CIRCUIT BREAKER	: 15 AMP BREAKER DIN RAIL MOUNT
	370	C9678Y11	1	CIRCUIT BREAKER	: 20 AMP BREAKER DIN RAIL MOUNT
	380	C9678Y23	2	CIRCUIT BREAKER	: 8 AMP BREAKER DIN RAIL MOUNT
	390	C9678Y24	3	CIRCUIT BREAKER	: 125 AMP BREAKER DIN RAIL MOUNT
	400	C9678Y31	1	CIRCUIT BREAKER	: 1 AMP BREAKER DIN RAIL MOUNT
	410	D2892Y04	1	NAME PLATE	: PDB NAMEPLATE
	420	F001050	37	WASHER	: WROUGHT WASHER #10 (.190)
	430	F004320K	6	TERMINAL, RING	: #10 RING, 16-14 AWG, INSULATED
	440	F009594	37	SCREW	: #10-24X5/8 ROUND HEAD MACHINE SCREW ZP
B	~~450~~				
	460	F011900	10FT	WIRE	: 8AWG / RED
C	470	F012388	200FT	CABLE, MULTICONDUCTOR	: 16AWG/2 CONDUCTOR .405 O.D 13A/CONDUCTOR
	480	F015121K	2	TERMINAL, RING	: 5/16" RING, 6 AWG, INSULATED
	490	F016461K	3	TERMINAL, RING	: 5/16" RING, 12-10 AWG, INSULATED
	500	F016578	10	TY-RAP	: LARGE 7 5/16"
	510	F018029K	6	NUT	: #10-24 ELASTIC STOP NUT
C	520	F018229	28	TY-RAP	: SMALL TY-RAP 3 1/2"
	530	F018249K	65FT	CABLE, MULTICONDUCTOR	: 16AWG/12 CONDUCTOR .76 O.D 7A/CONDUCTOR
	540	F018726	10FT	WIRE	: 2 AWG, BLACK
C	550	F019878	27	LOCK NUT	: 1/2" NUT
C	560	F020177	10	HOLE SEAL	: MAX HOLE 7/8"
	570	F020241	10FT	WIRE	: 4AWG / RED
	580	F020242	20FT	WIRE	: 6AWG / BLACK
	590	F020283	5	LOCK NUT	: 3/4" NUT
	600	F020284	2	LOCK NUT	: FOR 1" CABLE GRIP
	610	F020697	5FT	WIRE	: 4 AWG/ BLACK
	620	F020984	10	TY-RAP MOUNT	: USED WITH TY-RAP
B	~~630~~				
	640	F021277	4	HOLE SEAL	: MAX HOLE 1 3/8"
	650	F022258	0.5FT	SHRINK TUBING	: TUBING FOR DIODES/TRANSZORBS .12 I.D.
	660	F023518	10	END STOP	: SCREWED END STOP/CLIP
	670	F025837	37	WASHER	: LOCK WASHER #10
	680	F040134	64	DECAL	: COMPONENT LABEL
B	690	F040174	2	DIODE	: 3A 200 PIV RECTIFIER
	700	F041270	6	END STOP	: END STOP FOR ALL DIN RAIL
	710	H4985Y02	2	BUSS BAR	: 5 SLOT CIRCUIT BREAKER BUSS BAR

PRODUCT STRUCTURE

	ITEM	PART #	QTY	PART DESCRIPTION	
	720	H4985Y10	2	BUSS BAR	: 2 SLOT CIRCUIT BREAKER BUSS BAR
	730	L421303	2	CABLE GRIP	: CABLE FROM: 0.600"-0.700" 3/4" NPT
B	~~740~~				
B	750	F016189	35FT	CABLE, MULTICONDUCTOR	: 16AWG/4 CONDUCTOR .39 O.D 10A/CONDUCTOR

NOTES

1. USE WAGO PEN TO MARK F040134 DECAL AND 4016767 DECAL PER DRAWING. APPLY AS SHOWN.
2. COVER NOT SHOWN IN ALL VIEWS FOR CLARITY.
3. APPLY TERMINALS USING RATCHET TYPE CRIMP TOOL.
4. USE F016578, F018229 TYRAPS AND F020984 TIE MOUNT AS REQUIRED TO BUNDLE WIRES SECURELY.
5. ROUTE WIRES PER DIAGRAM AND WIRE CHART. MAKE ALL CORNERS AS SQUARE AS POSSIBLE.
6. LABEL 4011819 AND 4011832 TERMINAL BLOCKS WITH 4016767 DECAL
7. MARK WIRES PER HTT W.I. 18525
8. DO NOT USE FERRULE TERMINALS WITH TERMINAL BLOCKS
9. USE F040134 DECAL TO LABEL CABLE GRIP HOLES ON INSIDE OF ENCLOSURE AS SHOWN.
10. ALL CABLE AND WIRE LENGTHS ARE IN FEET.

CONFIDENTIAL

©COPYRIGHT 2011 HARSCO. THIS DRAWING OR DOCUMENT IS THE PROPERTY OF HARSCO AND EMBODIES CONFIDENTIAL INFORMATION, TRADE SECRET INFORMATION, AND/OR KNOW-HOW THAT IS THE PROPERTY OF HARSCO. BY ACCEPTING THIS DRAWING OR DOCUMENT, THE RECIPIENT AGREES (1) NOT TO PROVIDE, OR OTHERWISE MAKE AVAILABLE, THE DRAWING OR DOCUMENT, OR ANY INFORMATION OR KNOW-HOW EMBODIED THEREIN, TO ANY THIRD PARTY AND (2) NOT TO REPRODUCE OR USE THE DRAWING OR DOCUMENT TO MANUFACTURE ANY APPARATUS OR DEVICE, WITHOUT THE PRIOR WRITTEN AUTHORIZATION OF HARSCO.

CHANGE #		REVISION	DR	DATE
EC501056	A	NEW RELEASE	CJW	05/11
EC501160	B	UPDATED CABLES FOR BUGGY TRAVEL LIGHTS	CJW	05/11
EC501405	C	UPDATE AS BUILT	CJW	06/11

DRAWING TITLE/DESCRIPTION: PDB ASSEMBLY Bill Of Material

MACHINE TYPE-MODEL: MARK IV

E3 PROJECT FILE NAME: MARK IV HD

SHEET NUMBER 1

NUMBER OF JUPITER SHEETS 0

TOTAL NUMBER OF SHEETS 6

DRAWN BY: CJW

REL. DATE: 05/11

SIZE: D

SCALE:

HARSCO RAIL

E3 DRAWING

5007952

WIRING CHART

RUN	WIRE	SIZE	COLOR	FROM	TERM NO.	TO	TERM NO.	PART NO
1	1110	2 AWG	Black	CB1120:1	-	TB-PWR1:1	-	F018726
2	1110	2 AWG	Black	CB1130:1	-	TB-PWR2:2	-	F018726
3	1110	2 AWG	Black	CB1450:1	-	TB-PWR2:2	-	F018726
4	1132	2 AWG	Black	CB1120:2	-	TB-PWR3:3	-	F018726
5	000	4 AWG	Black	K1304:2	409760	TB-GND1:1	-	F020697
6	000	6 AWG	Black	TB31:10	-	TB31:1	-	F020242
7	000	6 AWG	Black	TB-GND1A:1	-	TB31:20	-	F020242
8	000	6 AWG	Black	TB31:1	-	TB-GND1A:1	-	F020242
9	000W	6 AWG	Black	K1304:1	F015121K	TB32:1	-	F020242
10	000W	6 AWG	Black	TB32:10	-	TB32:1	-	F020242
11	000W	6 AWG	Black	K1304:1	F0015121K	TB32:21	-	F020242
12	000	16 AWG	Green	K2180:-	F004320K	TB31:4	-	3406649
13	000	16 AWG	Green	K1295:-	F004320K	TB31:3	-	3406649
14	000	16 AWG	Green	K1304:-	F004320K	TB31:3	-	3406649
15	1110	10 AWG	Red	CB1460:1	-	TB-PWR2A:2	-	3407028
16	1132	10 AWG	Red	W4A:1	-	TB-PWR3A:3	-	3407028
17	4450	10 AWG	Red	K1295:2	F016461K	W3A:1	-	3407028
18	1260	12 AWG	Red	K2180:1	F016461K	TB30:10	-	3413146
19	1260	12 AWG	Red	CB2600:2	-	TB30:10	-	3413146
20	1460	12 AWG	Red	CB1460:2	-	TB30:18	-	3413146
21	4452	12 AWG	Red	CB4450:2	-	TB30:20	-	3413146
22	4460	12 AWG	Red	CB4460:2	-	TB30:22	-	3413146
23	4470	12 AWG	Red	CB4470:2	-	TB30:24	-	3413146
24	4480	12 AWG	Red	CB4480:2	-	TB30:26	-	3413146
25	4490	12 AWG	Red	CB4490:2	-	TB30:28	-	3413146
26	4500	12 AWG	Red	CB4500:2	-	TB30:30	-	3413146
27	4510	12 AWG	Red	CB4510:2	-	TB30:32	-	3413146
28	4520	12 AWG	Red	CB4520:2	-	TB30:34	-	3413146
29	4530	12 AWG	Red	CB4530:2	-	TB30:35	-	3413146
30	4540	12 AWG	Red	CB4540:2	-	TB30:37	-	3413146
31	6120	12 AWG	Red	CB6120:2	-	TB30:49	-	3413146
32	1132	4 AWG	Red	K1295:1	409760	TB-PWR3A:3	-	F020241
33	4450	8 AWG	Red	K1295:2	6104	W2A:1	-	F011900
34	4450	8 AWG	Red	K1295:2	6104	W1A:1	-	F011900
35	2590	12 AWG	White	K2180:2	F016461K	TB30:12	-	3413135
36	1295	16 AWG	White	K1304:+	F004320K	TB30:5	-	3407024
37	1295	16 AWG	White	K1295:+	F004320K	TB30:5	-	3407024
38	2180	16 AWG	White	K2180:+	F004320K	TB30:7	-	3407024
39	3485	12 AWG	Red	CB4550:2	-	TB30:50	-	3413146
40	4560	12 AWG	Red	CB4560:2	-	TB30:51	-	3413146

430 / 6	480 / 2	490 / 3
40 / 2	10 / 2	

JUMPER CHART

RUN	FROM	TO	PART NO.
1	TB30:10	TB30:11	4011821
2	TB30:12	TB30:13	4011821
3	TB30:20	TB30:21	4011821
4	TB30:22	TB30:23	4011821
5	TB30:24	TB30:25	4011821
6	TB30:26	TB30:27	4011821
7	TB30:28	TB30:29	4011821
8	TB30:30	TB30:31	4011821
9	TB30:32	TB30:33	4011821
10	TB30:35	TB30:36	4011821
11	TB30:37	TB30:38	4011821
12	TB31:1	TB31:2	4011838
13	TB31:2	TB31:6	4011824
14	TB31:6	TB31:9	4011823
15	TB31:10	TB31:9	4011838
16	TB31:10	TB31:11	4011838
17	TB31:11	TB31:15	4011824
18	TB31:15	TB31:19	4011824
19	TB31:19	TB31:20	4011838
20	TB32:1	TB32:2	4011838
21	TB32:2	TB32:6	4011824
22	TB32:6	TB32:9	4011823
23	TB32:10	TB32:9	4011838
24	TB32:10	TB32:11	4011838
25	TB32:11	TB32:15	4011824
26	TB32:15	TB32:19	4011824
27	TB32:19	TB32:20	4011821
28	TB32:20	TB32:21	4011838

150 / 12	160 / 2	170 / 6	200 / 8

DIODE CHART

RUN	DEVICE	FROM	TO	PART NO.
1	CR1305	K1305:+	K1305:-	F040174
2	CR2180	K2180:+	K2180:-	F040174

650 / .5	690 / 2

CONFIDENTIAL

©COPYRIGHT 2011 HARSCO. THIS DRAWING OR DOCUMENT IS THE PROPERTY OF HARSCO AND EMBODIES CONFIDENTIAL INFORMATION, TRADE SECRET INFORMATION, AND/OR KNOW-HOW THAT IS THE PROPERTY OF HARSCO. BY ACCEPTING THIS DRAWING OR DOCUMENT, THE RECIPIENT AGREES (1) NOT TO PROVIDE, OR OTHERWISE MAKE AVAILABLE, THE DRAWING OR DOCUMENT, OR ANY INFORMATION OR KNOW-HOW EMBODIED THEREIN, TO ANY THIRD PARTY AND (2) NOT TO REPRODUCE OR USE THE DRAWING OR DOCUMENT TO MANUFACTURE ANY APPARATUS OR DEVICE, WITHOUT THE PRIOR WRITTEN AUTHORIZATION OF HARSCO.

CHANGE #		REVISION	DR	DATE
EC501056	A	NEW RELEASE	CJW	05/11
EC501160	B	UPDATED CABLES FOR BUGGY TRAVEL LIGHTS	CJW	05/11
EC501405	C	UPDATE AS BUILT	CJW	06/11

DRAWING TITLE/DESCRIPTION:
PDB ASSEMBLY
Wiring

MACHINE TYPE-MODEL:
MARK IV

E3 PROJECT FILE NAME:
MARK IV HD

SHEET NUMBER: 2
NUMBER OF JUPITER SHEETS: 0
TOTAL NUMBER OF SHEETS: 6

DRAWN BY: CJW
REL. DATE: 05/11
SIZE: D
SCALE:

HARSCO RAIL

E3 DRAWING
5007952

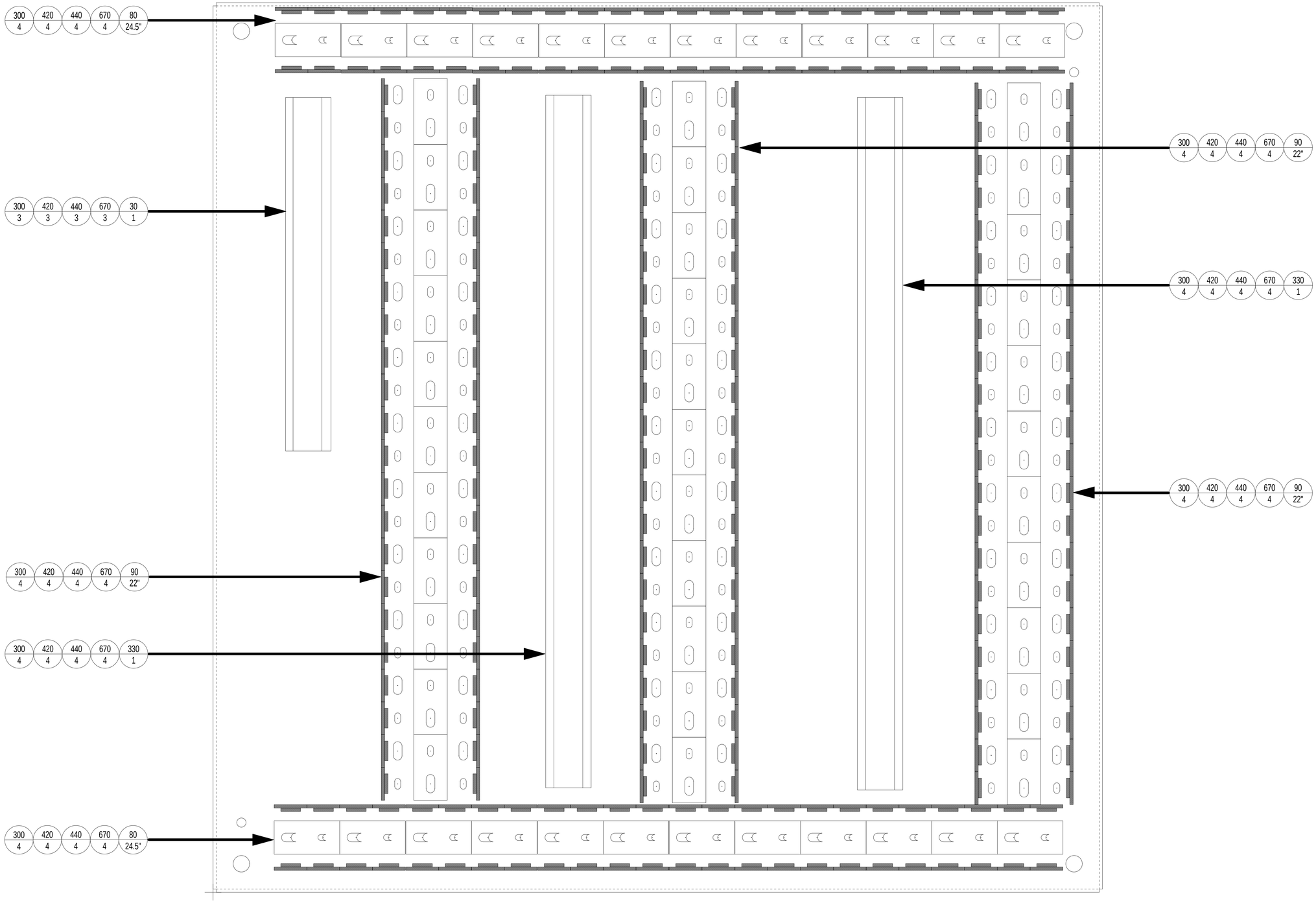

CONFIDENTIAL

©COPYRIGHT 2011 HARSCO. THIS DRAWING OR DOCUMENT IS THE PROPERTY OF HARSCO AND EMBODIES CONFIDENTIAL INFORMATION, TRADE SECRET INFORMATION, AND/OR KNOW-HOW THAT IS THE PROPERTY OF HARSCO. BY ACCEPTING THIS DRAWING OR DOCUMENT, THE RECIPIENT AGREES (1) NOT TO PROVIDE, OR OTHERWISE MAKE AVAILABLE, THE DRAWING OR DOCUMENT, OR ANY INFORMATION OR KNOW-HOW EMBODIED THEREIN, TO ANY THIRD PARTY AND (2) NOT TO REPRODUCE OR USE THE DRAWING OR DOCUMENT TO MANUFACTURE ANY APPARATUS OR DEVICE, WITHOUT THE PRIOR WRITTEN AUTHORIZATION OF HARSCO.

CHANGE #		REVISION	DR	DATE
EC501056	A	NEW RELEASE	CJW	05/11
EC501160	B	UPDATED CABLES FOR BUGGY TRAVEL LIGHTS	CJW	05/11
EC501405	C	UPDATE AS BUILT	CJW	06/11

DRAWING TITLE/DESCRIPTION:
PDB ASSEMBLY
Assembly

MACHINE TYPE-MODEL:
MARK IV

E3 PROJECT FILE NAME:
MARK IV HD

SHEET NUMBER: 3
NUMBER OF JUPITER SHEETS: 0
TOTAL NUMBER OF SHEETS: 6

DRAWN BY: CJW
REL. DATE: 05/11
SIZE: D
SCALE:

HARSCO RAIL

E3 DRAWING
5007952

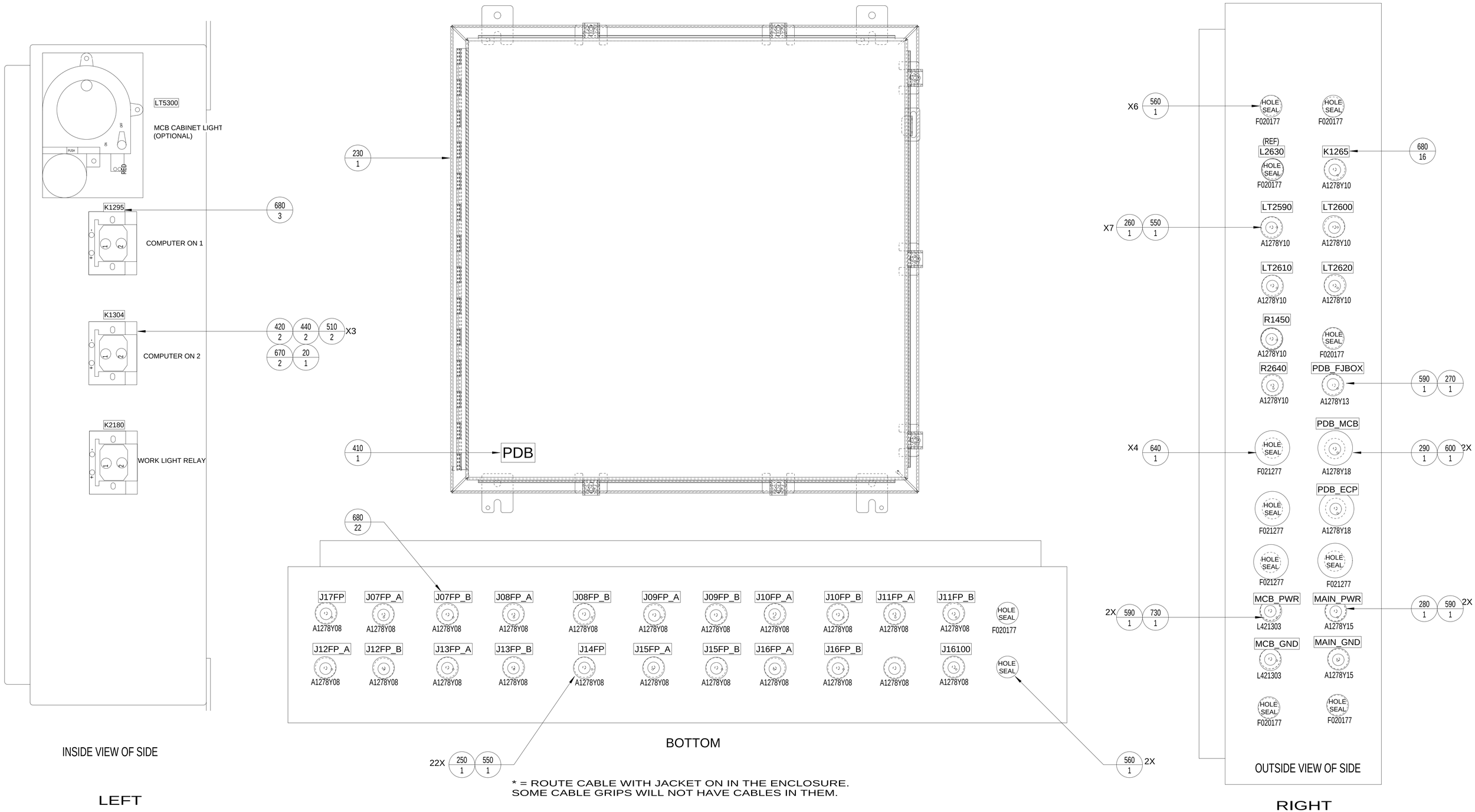

* = ROUTE CABLE WITH JACKET ON IN THE ENCLOSURE.
SOME CABLE GRIPS WILL NOT HAVE CABLES IN THEM.

CONFIDENTIAL

©COPYRIGHT 2011 HARSCO. THIS DRAWING OR DOCUMENT IS THE PROPERTY OF HARSCO AND EMBODIES CONFIDENTIAL INFORMATION, TRADE SECRET INFORMATION, AND/OR KNOW-HOW THAT IS THE PROPERTY OF HARSCO. BY ACCEPTING THIS DRAWING OR DOCUMENT, THE RECIPIENT AGREES (1) NOT TO PROVIDE, OR OTHERWISE MAKE AVAILABLE, THE DRAWING OR DOCUMENT, OR ANY INFORMATION OR KNOW-HOW EMBODIED THEREIN, TO ANY THIRD PARTY AND (2) NOT TO REPRODUCE OR USE THE DRAWING OR DOCUMENT TO MANUFACTURE ANY APPARATUS OR DEVICE, WITHOUT THE PRIOR WRITTEN AUTHORIZATION OF HARSCO.

CHANGE #		REVISION	DR	DATE
EC501056	A	NEW RELEASE	CJW	05/11
EC501160	B	UPDATED CABLES FOR BUGGY TRAVEL LIGHTS	CJW	05/11
EC501405	C	UPDATE AS BUILT	CJW	06/11

DRAWING TITLE/DESCRIPTION: PDB ASSEMBLY Assembly

MACHINE TYPE-MODEL: MARK IV

E3 PROJECT FILE NAME: MARK IV HD

SHEET NUMBER: 4

NUMBER OF JUPITER SHEETS: 0

TOTAL NUMBER OF SHEETS: 6

DRAWN BY: CJW

REL. DATE: 05/11

SIZE: D

SCALE:

HARSCO RAIL

E3 DRAWING

5007952

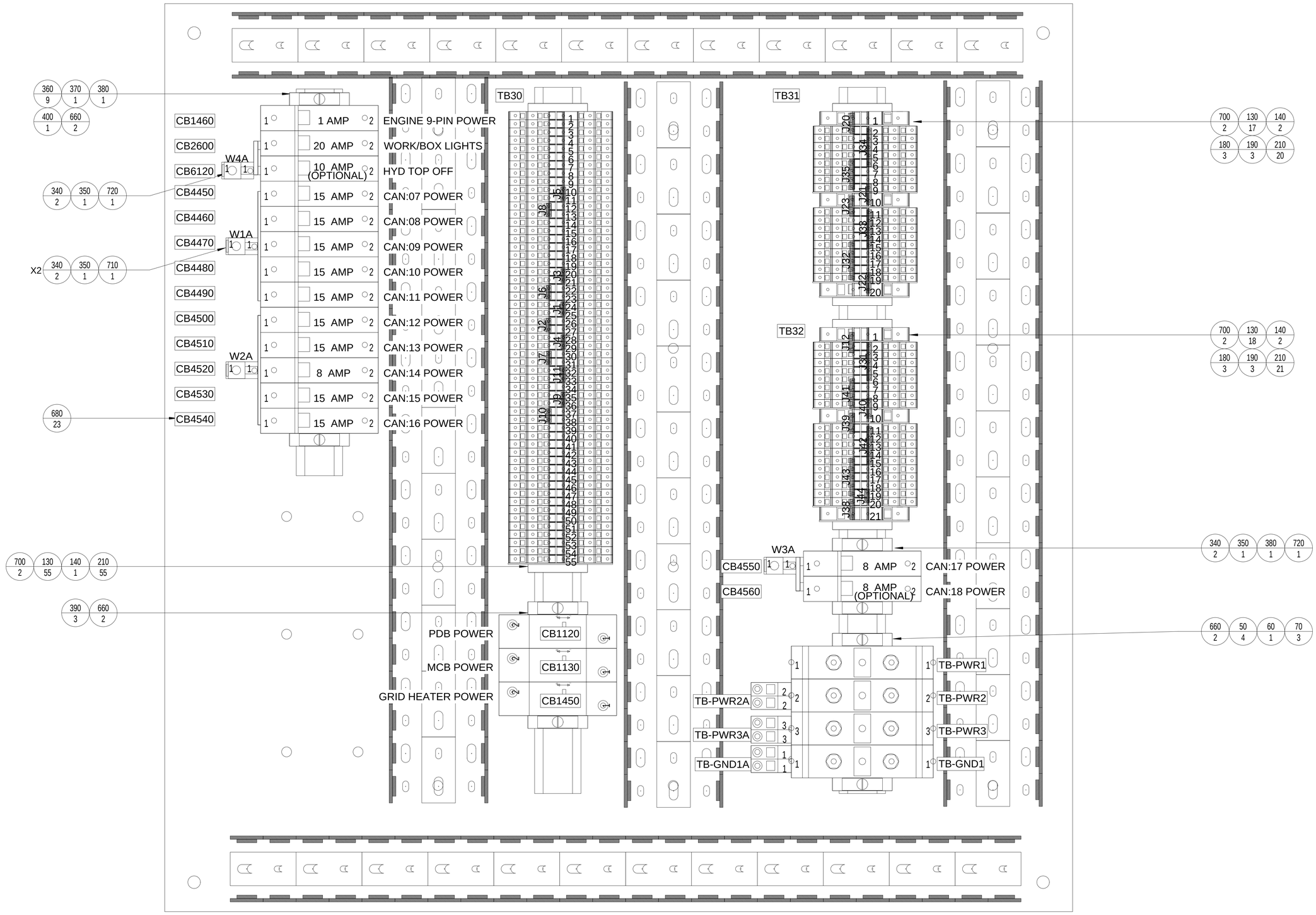

CONFIDENTIAL

©COPYRIGHT 2011 HARSCO. THIS DRAWING OR DOCUMENT IS THE PROPERTY OF HARSCO AND EMBODIES CONFIDENTIAL INFORMATION, TRADE SECRET INFORMATION, AND/OR KNOW-HOW THAT IS THE PROPERTY OF HARSCO. BY ACCEPTING THIS DRAWING OR DOCUMENT, THE RECIPIENT AGREES (1) NOT TO PROVIDE, OR OTHERWISE MAKE AVAILABLE, THE DRAWING OR DOCUMENT, OR ANY INFORMATION OR KNOW-HOW EMBODIED THEREIN, TO ANY THIRD PARTY AND (2) NOT TO REPRODUCE OR USE THE DRAWING OR DOCUMENT TO MANUFACTURE ANY APPARATUS OR DEVICE, WITHOUT THE PRIOR WRITTEN AUTHORIZATION OF HARSCO.

CHANGE #		REVISION	DR	DATE
EC501056	A	NEW RELEASE	CJW	05/11
EC501160	B	UPDATED CABLES FOR BUGGY TRAVEL LIGHTS	CJW	05/11
EC501405	C	UPDATE AS BUILT	CJW	06/11

DRAWING TITLE/DESCRIPTION: PDB ASSEMBLY Assembly

MACHINE TYPE-MODEL: MARK IV

E3 PROJECT FILE NAME: MARK IV HD

SHEET NUMBER: 5

NUMBER OF JUPITER SHEETS: 0

TOTAL NUMBER OF SHEETS: 6

DRAWN BY: CJW

REL. DATE: 05/11

SIZE: D

SCALE:

HARSCO RAIL

E3 DRAWING

5007952

-- PDB ASSEMBLY CABLES --

GRID HEATER POWER — R1450 — 25FT
ENGINE — 0-3212004-0-32 — PDB

520/2 220/2 240/25

RUN	COLOR	WIRE #	FROM	TERM NO.	TO	TERM NO.
1	BK	1450	K1505:1	-	CB1450:2	-

RUN CABLE IN SPLIT LOOM FOR PROTECTION

STARTER SLAVE RELAY 1 — K1265 — 25FT
PDB — F012388 — ENGINE

520/2 220/2 470/25

RUN	COLOR	WIRE #	FROM	TERM NO.	TO	TERM NO.
1	BK	000	TB31:2	-	K1265:-	-
2	WH	1268	TB30:4	-	K1265:+	-

RUN CABLE IN SPLIT LOOM FOR PROTECTION

WORK LIGHTS — LT2590 — 40FT
PDB — F012388 — I/C

520/2 220/2 470/40

RUN	COLOR	WIRE #	FROM	TERM NO.	TO	TERM NO.
1	BK	000	TB31:5	-	LT2590:-	-
2	WH	2590	TB30:12	-	LT2590:+	-

WORK LIGHTS — LT2600 — 45FT
PDB — F012388 — I/C

520/2 220/2 470/45

RUN	COLOR	WIRE #	FROM	TERM NO.	TO	TERM NO.
1	BK	000	TB31:5	-	LT2600:-	-
2	WH	2590	TB30:12	-	LT2600:+	-

WORK LIGHTS — LT2610 — 25FT
PDB — F012388 — I/C

520/2 220/2 470/25

RUN	COLOR	WIRE #	FROM	TERM NO.	TO	TERM NO.
1	BK	000	TB31:6	-	LT2610:-	-
2	WH	2590	TB30:13	-	LT2610:+	-

WORK LIGHTS — LT2620 — 25FT
PDB — F012388 — I/C

520/2 220/2 470/25

RUN	COLOR	WIRE #	FROM	TERM NO.	TO	TERM NO.
1	BK	000	TB31:6	-	LT2620:-	-
2	WH	2590	TB30:13	-	LT2620:+	-

AIR DRYER POWER — R2640 — 40FT
PDB — F012388 — AIR TANK

520/2 220/2 470/40

RUN	COLOR	WIRE #	FROM	TERM NO.	TO	TERM NO.
1	BK	000	TB31:7	-	HR2640:B	-
2	WH	2600	TB30:11	-	HR2640:A	-

PDB TO ECP CABLE — PDB_ECP — 25FT
ECP — F018249K — PDB

520/2 220/2 530/25

RUN	COLOR	WIRE #	FROM	TERM NO.	TO	TERM NO.
1	BK	000A	TB10:6	-	TB30:1	-
2	WH	000B	TB10:7	-	TB30:2	-
3	RD	000C	TB10:8	-	TB30:3	-
4	GN	2180	TB10:15	-	TB30:7	-
5	OR	2210	TB10:16	-	TB30:8	-
6	BU	2320	TB10:21	-	TB30:9	-
7	WH/BK	000	TB10:36	-	TB31:4	-
8	GN/BK	1295	TB10:10	-	TB30:5	-
9	OR/BK	1268	TB10:32	-	TB30:4	-
10	BU/BK	**NC**	-	-	-	-
11	RD/BK	**NC**	-	-	-	-
12	BK/WH	**NC**	-	-	-	-

PDB TO FRONT JB — PDB_FJBOX — 35FT
FRONT JBOX — F016189 — PDB

520/2 220/2 750/35

RUN	COLOR	WIRE #	FROM	TERM NO.	TO	TERM NO.
1	BK	3177	TB20:2	-	TB30:16	-
2	WH	3220	TB20:1	-	TB30:17	-
3	RD	000	TB20:3	-	TB31:9	-
4	GN	**NC**	-	-	-	-

PDB TO MCB CABLE — PDB_MCB — 40FT
PDB — F018249K — MCB

520/2 220/2 530/40

RUN	COLOR	WIRE #	FROM	TERM NO.	TO	TERM NO.
1	BK	**NC**	-	-	-	-
2	WH	5212	TB30:46	-	TB1:31	-
3	RD	1335	TB30:6	-	TB1:12	-
4	GN	3177	TB1:28	-	TB30:16	-
5	OR	3220	TB1:30	-	TB30:17	-
6	BU	**NC**	-	-	-	-
7	WH/BK	**NC**	-	-	-	-
8	GN/BK	**NC**	-	-	-	-
9	OR/BK	**NC**	-	-	-	-
10	BU/BK	**NC**	-	-	-	-
11	RD/BK	**NC**	-	-	-	-
12	BK/WH	**NC**	-	-	-	-

CONFIDENTIAL

©COPYRIGHT 2011 HARSCO. THIS DRAWING OR DOCUMENT IS THE PROPERTY OF HARSCO AND EMBODIES CONFIDENTIAL INFORMATION, TRADE SECRET INFORMATION, AND/OR KNOW-HOW THAT IS THE PROPERTY OF HARSCO. BY ACCEPTING THIS DRAWING OR DOCUMENT, THE RECIPIENT AGREES (1) NOT TO PROVIDE, OR OTHERWISE MAKE AVAILABLE, THE DRAWING OR DOCUMENT, OR ANY INFORMATION OR KNOW-HOW EMBODIED THEREIN, TO ANY THIRD PARTY AND (2) NOT TO REPRODUCE OR USE THE DRAWING OR DOCUMENT TO MANUFACTURE ANY APPARATUS OR DEVICE, WITHOUT THE PRIOR WRITTEN AUTHORIZATION OF HARSCO.

CHANGE #		REVISION	DR	DATE
EC501056	A	NEW RELEASE	CJW	05/11
EC501160	B	UPDATED CABLES FOR BUGGY TRAVEL LIGHTS	CJW	05/11
EC501405	C	UPDATE AS BUILT	CJW	06/11

DRAWING TITLE/DESCRIPTION: PDB ASSEMBLY Cable Chart

MACHINE TYPE-MODEL: MARK IV

E3 PROJECT FILE NAME: MARK IV HD

SHEET NUMBER: 6

NUMBER OF JUPITER SHEETS: 0

TOTAL NUMBER OF SHEETS: 6

DRAWN BY: CJW

REL. DATE: 05/11

SIZE: D

SCALE:

HARSCO RAIL

E3 DRAWING

5007952

Master Control Box

MCB - Outside View
Figure 7-2

The Master Control Box (MCB) is located in the left rear portion of the cab and houses computer system components such as the Jupiter high density input output module, as well as, power Relays and, various circuit breakers, terminal blocks, and diode modules. Refer to Figures 7-2 and 7-3.

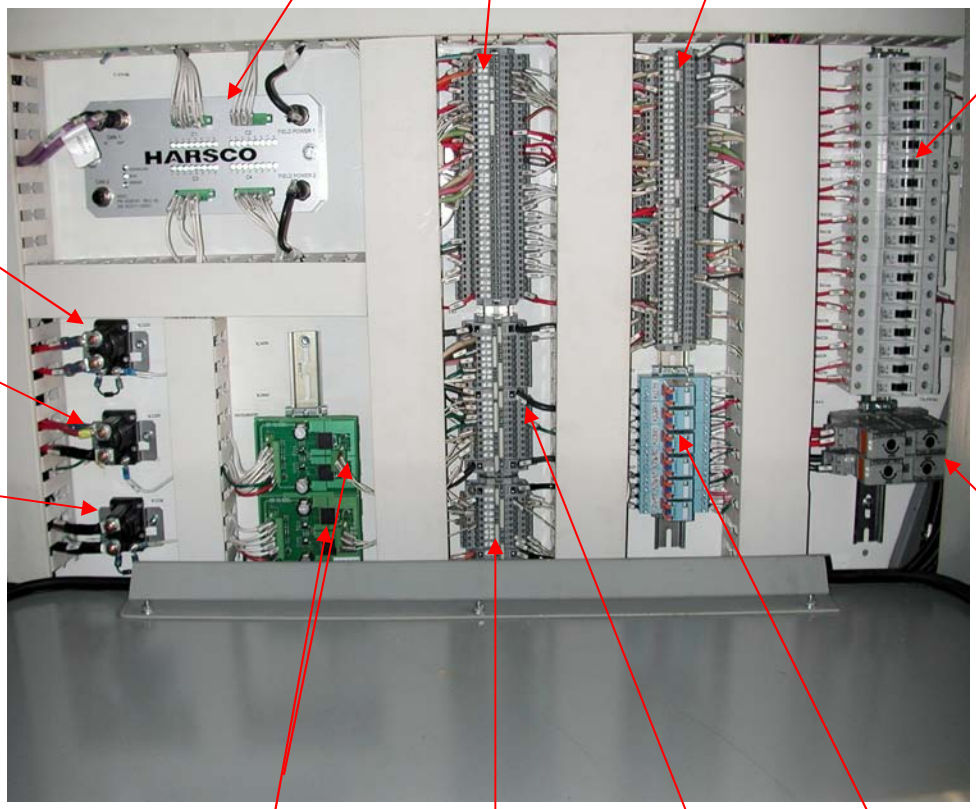

Master Control Box Assembly (MCB) - Inside View

The following is a list of MCB components:

K1233 Relay – Cab Power

K1320 Relay – Computer ON 3

K1328 Relay - Computer ON 4

HB1 - H-Bridge Driver - Controls Surfacing Actuators (Models w/Double Barrel Receivers)

HB2 - H-Bridge Driver - Controls Lining Actuators (Models w/Double Barrel Receivers)

TS2 - Terminal Block 2

TS3 - Terminal Block 3

TS4 - Terminal Block 4

TS1 - Terminal Block 1

K1275 Relay – Strarter Slave

K2280 Relay – Front Main Travel

K2300 Relay – Rear Main Travel

KJ06392 Relay – Surface Projector

KJ06425 Relay – Right Liner Projector

KJ06459 Relay – Left Liner Projector

CB 1245 - 5 AMP – Engine Protection Lights

CB 1295 - 5 AMP – Ignition Output Power

CB 1260 - 15 AMP – Ignition/Jupiter Switch Power

CB 3110 - 20 AMP – Brake Drive Lights Power

CB 2120 - 30 AMP – A/C Power

CB 2170 - 20 AMP – Work Light Switches

CB 2450 - 20 AMP – Cab Fan/Seat Power

CB 4110 - 10 AMP – J42 Power

CB 4120 - 8 AMP - CAN # 02 Power

CB 4130 - 8 AMP - CAN # 03 Power

CB 4140 – 15 AMP - CAN # 04 Power

CB 4150 - 15 AMP - CAN # 05 Power

CB 4160 - 15 AMP - CAN # 06 Power

CB 4170 - 20 AMP – Actuator Receiver Power

CB 4190 - 20 AMP – AC Power Supply

CB 4220 - 10 AMP – Liner Projector Power

CB 4230 - 10 AMP -

CB 4250 - 10 AMP -

TB-PWR4 – Terminal Block Power

TB-PWR4A - Terminal Block Power

TB-GND2 - Terminal Block Ground

TB-GND2A – Terminal Block Ground

Master Control Box Assembly (MCB)
Dwg No. 5007951

PRODUCT STRUCTURE

	ITEM	PART #	QTY	PART DESCRIPTION	
	10	6104	2	TERMINAL, RING	: 5/16" RING, 8 AWG, INSULATED
	20	163298	1	DIN RAIL	: 9.5" DIN RAIL
	30	172164	3	RELAY, POWER	: SPNO 100A 24VDC COIL
B	40	200107	32	FERRULE	: 16 AWG BLACK
	50	409760	2	TERMINAL, RING	: 5/16" RING, 4 AWG, NON-INSULATED
	60	3402461	2	TERMINAL BLOCK	: 2 CONDUCTOR #4 AWG - #4/0 AWG GREY
	70	3402469	2	TERMINAL BLOCK, AD	: 2 CONDUCTOR AWG 24-6 GREY ADAPTER
	80	3405992	1	WIRE DUCT	: WIRE DUCT W/COVER 2" X 2.9" X 6.56'
	90	3405993	1	WIRE DUCT	: WIRE DUCT W/COVER 3" X 2.9" X 6.56'
	100	3406646	60FT	WIRE	: 16AWG / RED, TYPE MTW
	110	3406649	40FT	WIRE	: 16AWG / GREEN, TYPE MTW
	120	3407024	125FT	WIRE	: 16AWG / WHITE, TYPE MTW
	130	3407028	10FT	WIRE	: 10AWG / RED, TYPE MTW
	140	3413146	30FT	WIRE	: 12AWG / RED, TYPE MTW
	150	4011819	104	TERMINAL BLOCK	: 20-10AWG, 4 CONDUCTOR, DIN RAIL, GRAY
	160	4011820	5	TERMINAL BLOCK, END PLATE	: FOR 4011819 TERMINAL BLOCK
B	170	4011821	5	TERMINAL BLOCK, JUMPER	: JUMPER BAR FOR 2 TERMINAL BLOCKS 32A
B	180	4011822	2	TERMINAL BLOCK, JUMPER	: JUMPER BAR FOR 3 TERMINAL BLOCKS 32A
	190	4011823	2	TERMINAL BLOCK, JUMPER	: JUMPER BAR FOR 4 TERMINAL BLOCKS 32A
	200	4011824	5	TERMINAL BLOCK, JUMPER	: JUMPER BAR FOR 5 TERMINAL BLOCKS 32A
	210	4011832	5	TERMINAL BLOCK	: 20-6AWG, 2 CONDUCTOR, DIN RAIL, GRAY
	220	4011833	5	TERMINAL BLOCK, END PLATE	: FOR 4011832 TERMINAL BLOCK
	230	4011838	6	TERMINAL BLOCK, JUMPER	: STEP-DOWN FOR 2 TERMINAL BLOCKS 57A
	240	4016767	1.09	DECAL	: TERMINAL BLOCK MARKER STRIP
	250	4019171	4	TAGS, CABLE	: PLASTIC CABLE TAG SLEEVE
	260	4022334	2	CABLE ASSEMBLY, M12	: 5 M W/M12 FEMALE CONN
	270	4028741	1	MODULE, MULTIPLEX	: HIGH DENSITY 32 INPUT/OUTPUT BOARD
	280	4028959	3	DIN RAIL	: 19.25" DIN RAIL
	290	4029406	1	ENCLOSURE, MACHINED	: DRILLED PANEL FOR MARK IV (MCB)
	300	A1563Y04	39	INSERT, THREADED	: #10X24 PLATED STEEL
	310	A1563Y07	2	INSERT, THREADED	: 1/4X20 PLATED STEEL
	320	B1382Y08	8	END CAP	: FOR SIEMENS BUS BAR
	330	B1382Y09	4	BUSS CONNECTOR	: FOR SIEMENS 80 AMP BUS BAR #12 UP TO #2 AWG
	340	C9678Y08	2	CIRCUIT BREAKER	: 5 AMP BREAKER DIN RAIL MOUNT
	350	C9678Y09	4	CIRCUIT BREAKER	: 10 AMP BREAKER DIN RAIL MOUNT
	360	C9678Y10	4	CIRCUIT BREAKER	: 15 AMP BREAKER DIN RAIL MOUNT
	370	C9678Y11	5	CIRCUIT BREAKER	: 20 AMP BREAKER DIN RAIL MOUNT
	380	C9678Y12	1	CIRCUIT BREAKER	: 30 AMP BREAKER DIN RAIL MOUNT
	390	C9678Y23	2	CIRCUIT BREAKER	: 8 AMP BREAKER DIN RAIL MOUNT
B	400	D0650Y04	6	RELAY, SOCKET	: SOCKET
B	410	D0650Y07	6	RELAY, DC	: 2-NO/NC DPDT 24V COIL CONTACTS 30V @10A
	420	F001050	39	WASHER	: WROUGHT WASHER #10 (.190)
	430	F001106	2	WASHER	: WROUGHT WASHER 1/4 ZP
	440	F003067	2	SCREW	: 1/4-20X5/8 HEX HEAD CAP SCREW GR5 ZP
	450	F004320K	6	TERMINAL, RING	: #10 RING, 16-14 AWG, INSULATED
	460	F009535	2	WASHER	: SAE RGLR LOCK WASHER 1/4 ZP
	470	F009594	39	SCREW	: #10-24X5/8 ROUND HEAD MACHINE SCREW ZP
	480	F011900	15FT	WIRE	: 8AWG / RED
	490	F015120	15FT	WIRE	: 6AWG / RED
	500	F015121K	4	TERMINAL, RING	: 5/16" RING, 6 AWG, INSULATED
	510	F016461K	1	TERMINAL, RING	: 5/16" RING, 12-10 AWG, INSULATED
	520	F018229	20	TY-RAP	: SMALL TY-RAP 3 1/2"
	530	F020241	10FT	WIRE	: 4AWG / RED
	540	F020242	20FT	WIRE	: 6AWG / BLACK
	550	F020697	10FT	WIRE	: 4 AWG/ BLACK
	560	F020819	15FT	WIRE	: 8AWG / BLACK
	570	F020957	0.25FT	SHRINK TUBING	: TUBING 0.19" I.D. SHRINK RATE .012-.168"
	580	F020984	8	TY-RAP MOUNT	: USED WITH TY-RAP
B	590	F023518	8	END STOP	: SCREWED END STOP/CLIP
	600	F025837	39	WASHER	: LOCK WASHER #10
	610	F040134	44	DECAL	: COMPONENT LABEL
	620	F040174	2	DIODE	: 3A 200 PIV RECTIFIER
	630	F041270	8	END STOP	: END STOP FOR ALL DIN RAIL
	640	H4985Y02	2	BUSS BAR	: 5 SLOT CIRCUIT BREAKER BUSS BAR
	650	H4985Y06	1	BUSS BAR	: 3 SLOT CIRCUIT BREAKER BUSS BAR
	660	H4985Y10	1	BUSS BAR	: 2 SLOT CIRCUIT BREAKER BUSS BAR
	670	H5614Y01	2	MODULE, H-BRIDGE	: 2 CHANNEL MOTOR DRIVER, H-BRIDGE

NOTES

1. USE WAGO PEN TO MARK F040134 DECAL AND 4016767 DECAL PER DRAWING. APPLY AS SHOWN.
2. COVER NOT SHOWN IN ALL VIEWS FOR CLARITY.
3. APPLY TERMINALS USING RATCHET TYPE CRIMP TOOL.
4. USE F018229 TYRAPS AND F020984 TIE MOUNT AS REQUIRED TO BUNDLE WIRES SECURELY.
5. ROUTE WIRES PER DIAGRAM AND WIRE CHART. MAKE ALL CORNERS AS SQUARE AS POSSIBLE.
6. LABEL 4011819 AND 4011832 TERMINAL BLOCK WITH 4016767 DECAL
7. MARK WIRES PER HTT W.I. 18525
8. DO NOT USE FERRULE TERMINALS WITH TERMINAL BLOCKS
9. USE F040134 DECAL TO LABEL CABLE GRIP HOLES ON INSIDE OF ENCLOSURE AS SHOWN.
10. ALL CABLE AND WIRE LENGTHS ARE IN FEET.

CONFIDENTIAL

©COPYRIGHT 2011 HARSCO. THIS DRAWING OR DOCUMENT IS THE PROPERTY OF HARSCO AND EMBODIES CONFIDENTIAL INFORMATION, TRADE SECRET INFORMATION, AND/OR KNOW-HOW THAT IS THE PROPERTY OF HARSCO. BY ACCEPTING THIS DRAWING OR DOCUMENT, THE RECIPIENT AGREES (1) NOT TO PROVIDE, OR OTHERWISE MAKE AVAILABLE, THE DRAWING OR DOCUMENT, OR ANY INFORMATION OR KNOW-HOW EMBODIED THEREIN, TO ANY THIRD PARTY AND (2) NOT TO REPRODUCE OR USE THE DRAWING OR DOCUMENT TO MANUFACTURE ANY APPARATUS OR DEVICE, WITHOUT THE PRIOR WRITTEN AUTHORIZATION OF HARSCO.

CHANGE #		REVISION	DR	DATE
EC501056	A	NEW RELEASE	CJW	05/11
EC501405	B	UPDATE AS BUILT	CJW	06/11

DRAWING TITLE/DESCRIPTION: MCB ASSEMBLY Bill Of Material

MACHINE TYPE-MODEL: MARK IV

E3 PROJECT FILE NAME: MARK IV HD

SHEET NUMBER: 1

NUMBER OF JUPITER SHEETS: 0

TOTAL NUMBER OF SHEETS: 4

DRAWN BY: CJW

REL. DATE: 05/11

SIZE: D

SCALE:

HARSCO RAIL

E3 DRAWING

5007951

WIRING CHART

RUN	WIRE	SIZE	COLOR	FROM	TERM NO.	TO	TERM NO.	PART NO
1	000	4 AWG	Black	K1328:2	409760	TB-GND2:2	-	F020697
2	000	6 AWG	Black	TB3:1	-	TB-GND2A:2A	-	F020242
3	000	6 AWG	Black	TB3:10	-	TB3:1	-	F020242
4	000	6 AWG	Black	TB3:10	-	TB3:20	-	F020242
5	000W	8 AWG	Black	K1328:1	6104	TB4:1	-	F020819
6	000W	8 AWG	Black	K1328:1	6104	TB4:10	-	F020819
7								
8								
9	000	16 AWG	Green	KJ06392:8	200107	TB3:13	-	3406649
10	000	16 AWG	Green	KJ06459:8	200107	TB3:14	-	3406649
11	000	16 AWG	Green	MODJ06559:GND	-	TB3:14	-	3406649
12	000	16 AWG	Green	K1328:-	F004320K	TB3:4	-	3406649
13	000	16 AWG	Green	K2280:8	200107	TB3:7	-	3406649
14	000	16 AWG	Green	K1233:-	F004320K	TB3:17	-	3406649
15	000	16 AWG	Green	K2300:8	200107	TB3:7	-	3406649
16	000	16 AWG	Green	K1320:-	F004320K	TB3:4	-	3406649
17	000	16 AWG	Green	MODJ06742:GND	-	TB3:14	-	3406649
18	000	16 AWG	Green	KJ06425:8	200107	TB3:13	-	3406649
19	000	16 AWG	Green	K1275:8	200107	TB3:3	-	3406649
20	2122	10 AWG	Red	CB2120:2	-	TB1:13	-	3407028
21	4110	10 AWG	Red	K1320:2	F016461K	CB4160:1	-	3407028
22	1260	12 AWG	Red	CB1260:2	-	TB1:1	-	3413146
23	2170	12 AWG	Red	CB2170:2	-	TB1:16	-	3413146
24	2450	12 AWG	Red	CB2450:2	-	TB1:19	-	3413146
25	3110	12 AWG	Red	CB3110:2	-	TB1:23	-	3413146
26	3485	12 AWG	Red	CB4170:2	-	TB2:8	-	3413146
27	4112	12 AWG	Red	CB4110:2	-	TB2:1	-	3413146
28	4120	12 AWG	Red	CB4120:2	-	TB2:2	-	3413146
29	4130	12 AWG	Red	CB4130:2	-	TB2:3	-	3413146
30	4140	12 AWG	Red	CB4140:2	-	TB2:4	-	3413146
31	4150	12 AWG	Red	CB4150:2	-	TB1:42	-	3413146
32	4160	12 AWG	Red	CB4160:2	-	TB2:6	-	3413146
33	4190	12 AWG	Red	CB4190:2	-	TB2:13	-	3413146
34	4220	12 AWG	Red	CB4220:2	-	TB2:14	-	3413146
35	4250	12 AWG	Red	CB4250:2	-	TB2:36	-	3413146
36	1245	16 AWG	Red	CB1245:2	-	TB1:6	-	3406646
37	1262	16 AWG	Red	CB1295:1	-	TB1:8	-	3406646
38	1332	16 AWG	Red	CB1295:2	-	TB1:9	-	3406646
39	3110	16 AWG	Red	K2280:5	200107	TB1:23	-	3406646
40	3110	16 AWG	Red	K2280:6	200107	TB1:23	-	3406646
41	3110	16 AWG	Red	K2300:5	200107	TB1:24	-	3406646
42	3110	16 AWG	Red	K2300:6	200107	TB1:24	-	3406646
43								
44	3485	16 AWG	Red	MODJ06559:24V	-	TB2:12	-	3406646
45	3485	16 AWG	Red	MODJ06742:24V	-	TB2:12	-	3406646
46	4220	16 AWG	Red	KJ06459:5	200107	TB2:15	-	3406646
47	4230	16 AWG	Red	KJ06425:5	200107	TB2:15	-	3406646
48	4230	16 AWG	Red	KJ06425:6	200107	TB2:14	-	3406646
49	4230	16 AWG	Red	CB4230:2	-	TB2:15	-	3406646
50	4250	16 AWG	Red	KJ06459:6	200107	TB2:14	-	3406646
51	4250	16 AWG	Red	KJ06392:5	200107	TB2:36	-	3406646
52	1140	4 AWG	Red	K1320:1	409760	TB-PWR4:4	-	F020241
53	1140	6 AWG	Red	K1233:1	F015121K	TB-PWR4A:4A	-	F015120
54	2112	6 AWG	Red	W6A:1	-	K1233:2	F015121K	F015120
55	4110	6 AWG	Red	W7A:1	-	K1320:2	F015121K	F015120
56	4110	6 AWG	Red	W8A:1	-	K1320:2	F015121K	F015120
57	1140	8 AWG	Red	W5A:1	-	TB-PWR4A:4A	-	F011900
58	1240	16 AWG	White	K1275:6	200107	TB1:4	-	3407024
59	1240	16 AWG	White	CB1245:1	-	TB1:3	-	3407024
60	1232	16 AWG	White	K1275:2	200107	TB1:5	-	3407024
61	1232	16 AWG	White	K1233:+	F004320K	TB1:5	-	3407024
62	1268	16 AWG	White	K1275:7	200107	TB1:7	-	3407024
63	1295	16 AWG	White	K1328:+	F004320K	TB1:11	-	3407024
64	1295	16 AWG	White	K1320:+	F004320K	TB1:11	-	3407024
65	2280	16 AWG	White	K2280:7	200107	TB1:17	-	3407024
66	2300	16 AWG	White	K2300:7	200107	TB1:18	-	3407024
67	3112	16 AWG	White	K2280:4	200107	TB1:25	-	3407024
68	3112	16 AWG	White	K2280:3	200107	TB1:26	-	3407024
69	3200	16 AWG	White	K2300:3	200107	TB1:29	-	3407024
70	3220	16 AWG	White	K2300:4	200107	TB1:30	-	3407024
71								
72								
73								
74								
75								

WIRING CHART

RUN	WIRE	SIZE	COLOR	FROM	TERM NO.	TO	TERM NO.	PART NO
76								
77								
78								
79	3488	16 AWG	White	K3450:5	200107	K3460:3	200107	3407024
80	4222	16 AWG	White	KJ06425:4	200107	TB2:17	-	3407024
81	4222	16 AWG	White	KJ06459:3	200107	TB2:18	-	3407024
82	4232	16 AWG	White	KJ06459:4	200107	TB2:16	-	3407024
83	4242	16 AWG	White	KJ06425:3	200107	TB2:18	-	3407024
84	4262	16 AWG	White	KJ06392:3	200107	TB2:19	-	3407024
85	J05510	16 AWG	White	CAN:06:C1-8	-	TB2:27	-	3407024
86	J06200	16 AWG	White	CAN:06:C1-1	-	TB2:20	-	3407024
87	J06208	16 AWG	White	CAN:06:C3-1	-	TB2:28	-	3407024
88	J06233	16 AWG	White	CAN:06:C3-2	-	TB2:29	-	3407024
89	J06258	16 AWG	White	CAN:06:C3-3	-	TB2:30	-	3407024
90	J06292	16 AWG	White	CAN:06:C1-2	-	TB2:21	-	3407024
91	J06358	16 AWG	White	CAN:06:C1-3	-	TB2:22	-	3407024
92	J06392	16 AWG	White	CAN:06:C1-4	-	TB2:23	-	3407024
93	J06394	16 AWG	White	KJ06392:7	200107	TB2:31	-	3407024
94	J06394	16 AWG	White	CAN:06:C3-4	-	TB2:31	-	3407024
95	J06425	16 AWG	White	CAN:06:C1-5	-	TB2:24	-	3407024
96	J06427	16 AWG	White	KJ06425:7	200107	TB2:32	-	3407024
97	J06427	16 AWG	White	CAN:06:C3-5	-	TB2:32	-	3407024
98	J06458	16 AWG	White	CAN:06:C1-6	-	TB2:25	-	3407024
99	J06460	16 AWG	White	KJ06459:7	200107	TB2:33	-	3407024
100	J06460	16 AWG	White	CAN:06:C3-6	-	TB2:33	-	3407024
101	J06494	16 AWG	White	CAN:06:C1-7	-	TB2:26	-	3407024
102	J06558	16 AWG	White	MODJ06559:1IN1	-	CAN:06:C4-1	-	3407024
103	J06575	16 AWG	White	CAN:06:C4-2	-	MODJ06559:1IN2	-	3407024
104	J06592	16 AWG	White	MODJ06559:1EF	-	CAN:06:C2-1	-	3407024
105	J06642	16 AWG	White	CAN:06:C2-2	-	MODJ06559:2EF	-	3407024
106	J06658	16 AWG	White	CAN:06:C4-3	-	MODJ06559:2IN1	-	3407024
107	J06675	16 AWG	White	MODJ06742:1EF	-	CAN:06:C2-3	-	3407024
108	J06677	16 AWG	White	MODJ06559:2IN2	-	CAN:06:C4-4	-	3407024
109	J06708	16 AWG	White	CAN:06:C2-4	-	MODJ06742:2EF	-	3407024
110	J06742	16 AWG	White	CAN:06:C4-5	-	MODJ06742:1IN1	-	3407024
111	J06758	16 AWG	White	MODJ06742:1IN2	-	CAN:06:C4-6	-	3407024
112	J06808	16 AWG	White	CAN:06:C4-7	-	MODJ06742:2IN1	-	3407024
113	J06842	16 AWG	White	MODJ06742:2IN2	-	CAN:06:C4-8	-	3407024

450	500	40	170	180	190	620	570	520	250	260	
6	4	44	5	2	2	2	.25	2	2	1	
50	10	510	200	230							
2	2	1	5	6							

JUMPER CHART

RUN	FROM	TO	PART NO.
1	TB1:3	TB1:4	4011821
2	TB1:19	TB1:21	4011822
3	TB1:23	TB1:24	4011821
4	TB1:25	TB1:27	4011822
5	TB1:42	TB1:43	4011821
6	TB2:4	TB2:5	4011821
7	TB2:6	TB2:7	4011821
8	TB2:8	TB2:12	4011824
9	TB3:1	TB3:2	4011838
10	TB3:2	TB3:6	4011824
11	TB3:6	TB3:9	4011823
12	TB3:10	TB3:9	4011838
13	TB3:10	TB3:11	4011838
14	TB3:11	TB3:15	4011824
15	TB3:14	TB3:19	4011824
16	TB3:19	TB3:20	4011838
17	TB4:1	TB4:2	4011838
18	TB4:2	TB4:6	4011824
19	TB4:6	TB4:9	4011823
20	TB4:10	TB4:9	4011838

DIODE CHART

RUN	DEVICE	FROM	TO	PART NO.
1	CR1240	K1233:+	K1233:-	F040174
2	CR1330	K1328:+	K1328:-	F040174

CAN:06 POWER MCB — J06FP_A 4022334 — CABLE ASSEMBLY, M12 MCB

RUN	COLOR	WIRE #	FROM	TERM NO.	TO	TERM NO.
1	W-1	4160	CAN:06:FPA	EXISTS	TB2:7	-
2	W-2	4160	CAN:06:FPA	EXISTS	TB2:7	-
3	W-3	000W	CAN:06:FPA	EXISTS	TB4:9	-
4	W-4	000W	CAN:06:FPA	EXISTS	TB4:9	-
5	W-5	**NC**	CAN:06:FPA	EXISTS	-	-

CAN:06 POWER MCB — J06FP_B 4022334 — CABLE ASSEMBLY, M12 MCB

RUN	COLOR	WIRE #	FROM	TERM NO.	TO	TERM NO.
1	W-1	4160	CAN:06:FPB	EXISTS	TB2:7	-
2	W-2	4160	CAN:06:FPB	EXISTS	TB2:7	-
3	W-3	000W	CAN:06:FPB	EXISTS	TB4:9	-
4	W-4	000W	CAN:06:FPB	EXISTS	TB4:9	-
5	W-5	**NC**	CAN:06:FPB	EXISTS	-	-

CONFIDENTIAL

©COPYRIGHT 2011 HARSCO. THIS DRAWING OR DOCUMENT IS THE PROPERTY OF HARSCO AND EMBODIES CONFIDENTIAL INFORMATION, TRADE SECRET INFORMATION, AND/OR KNOW-HOW THAT IS THE PROPERTY OF HARSCO. BY ACCEPTING THIS DRAWING OR DOCUMENT, THE RECIPIENT AGREES (1) NOT TO PROVIDE, OR OTHERWISE MAKE AVAILABLE, THE DRAWING OR DOCUMENT, OR ANY INFORMATION OR KNOW-HOW EMBODIED THEREIN, TO ANY THIRD PARTY AND (2) NOT TO REPRODUCE OR USE THE DRAWING OR DOCUMENT TO MANUFACTURE ANY APPARATUS OR DEVICE, WITHOUT THE PRIOR WRITTEN AUTHORIZATION OF HARSCO.

CHANGE #		REVISION	DR	DATE
EC501056	A	NEW RELEASE	CJW	05/11
EC501405	B	UPDATE AS BUILT	CJW	06/11

DRAWING TITLE/DESCRIPTION: MCB ASSEMBLY Wiring

MACHINE TYPE-MODEL: MARK IV

E3 PROJECT FILE NAME: MARK IV HD

SHEET NUMBER: 2

NUMBER OF JUPITER SHEETS: 0

TOTAL NUMBER OF SHEETS: 4

DRAWN BY: CJW

REL. DATE: 05/11

SIZE: D

SCALE:

HARSCO RAIL

E3 DRAWING

5007951

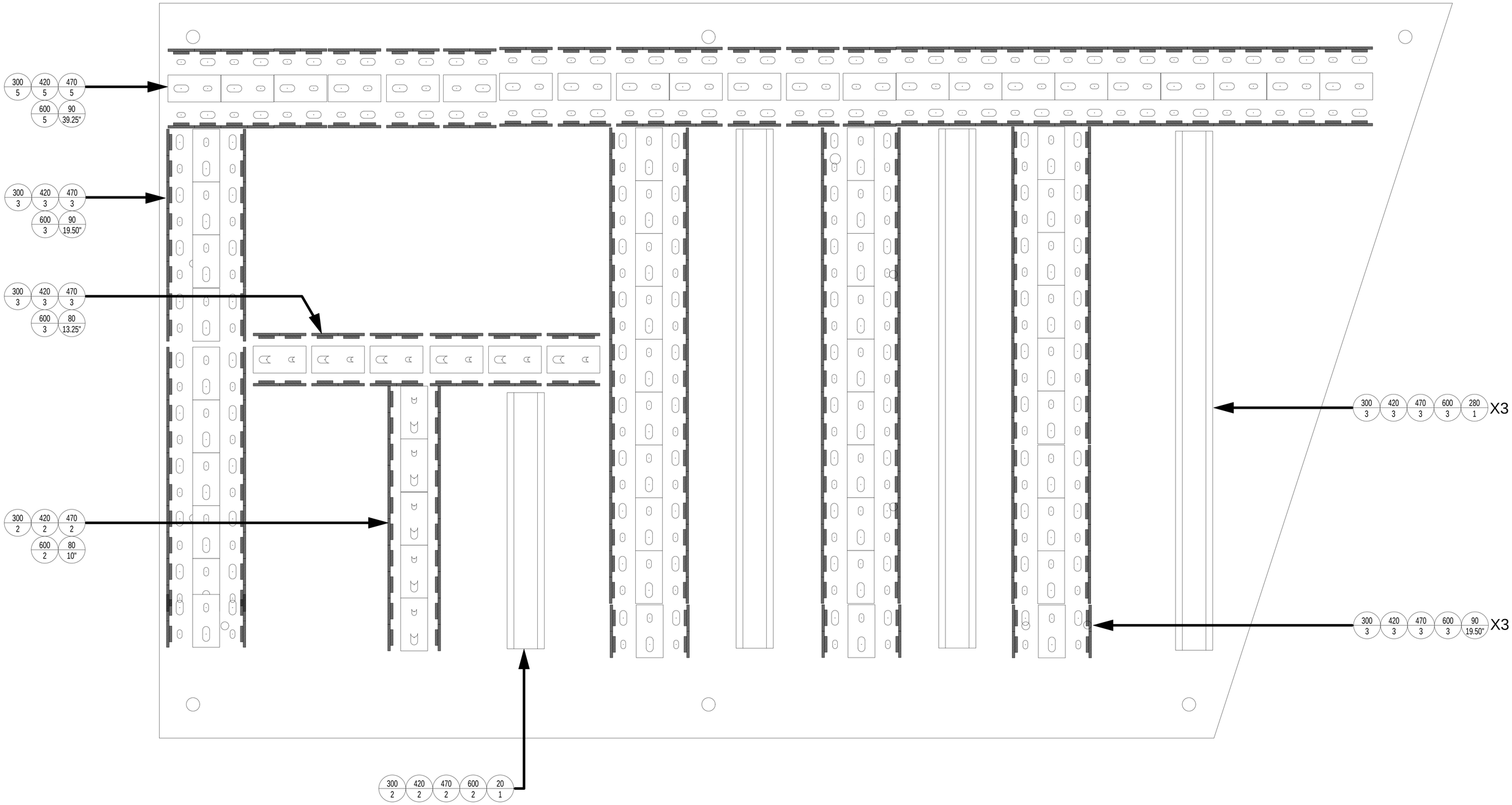

CONFIDENTIAL

©COPYRIGHT 2011 HARSCO. THIS DRAWING OR DOCUMENT IS THE PROPERTY OF HARSCO AND EMBODIES CONFIDENTIAL INFORMATION, TRADE SECRET INFORMATION, AND/OR KNOW-HOW THAT IS THE PROPERTY OF HARSCO. BY ACCEPTING THIS DRAWING OR DOCUMENT, THE RECIPIENT AGREES (1) NOT TO PROVIDE, OR OTHERWISE MAKE AVAILABLE, THE DRAWING OR DOCUMENT, OR ANY INFORMATION OR KNOW-HOW EMBODIED THEREIN, TO ANY THIRD PARTY AND (2) NOT TO REPRODUCE OR USE THE DRAWING OR DOCUMENT TO MANUFACTURE ANY APPARATUS OR DEVICE, WITHOUT THE PRIOR WRITTEN AUTHORIZATION OF HARSCO.

CHANGE #		REVISION	DR	DATE
EC501056	A	NEW RELEASE	CJW	05/11
EC501405	B	UPDATE AS BUILT	CJW	06/11

DRAWING TITLE/DESCRIPTION:
MCB ASSEMBLY
Assembly

MACHINE TYPE-MODEL:
MARK IV

E3 PROJECT FILE NAME:
MARK IV HD

SHEET NUMBER: 3
NUMBER OF JUPITER SHEETS: 0
TOTAL NUMBER OF SHEETS: 4

DRAWN BY: CJW
REL. DATE: 05/11
SIZE: D
SCALE:

HARSCO RAIL

E3 DRAWING
5007951

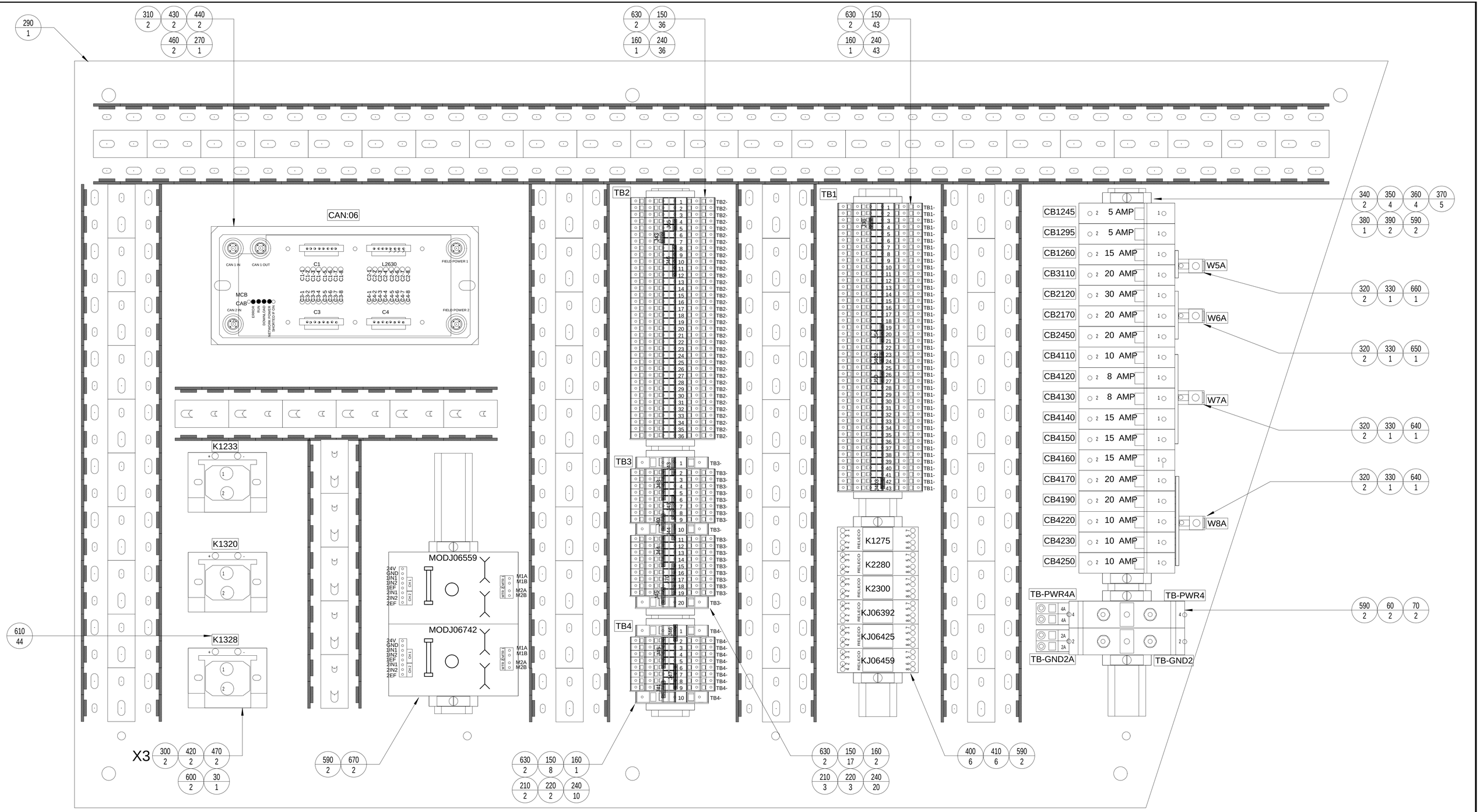

CONFIDENTIAL

©COPYRIGHT 2011 HARSCO. THIS DRAWING OR DOCUMENT IS THE PROPERTY OF HARSCO AND EMBODIES CONFIDENTIAL INFORMATION, TRADE SECRET INFORMATION, AND/OR KNOW-HOW THAT IS THE PROPERTY OF HARSCO. BY ACCEPTING THIS DRAWING OR DOCUMENT, THE RECIPIENT AGREES (1) NOT TO PROVIDE, OR OTHERWISE MAKE AVAILABLE, THE DRAWING OR DOCUMENT, OR ANY INFORMATION OR KNOW-HOW EMBODIED THEREIN, TO ANY THIRD PARTY AND (2) NOT TO REPRODUCE OR USE THE DRAWING OR DOCUMENT TO MANUFACTURE ANY APPARATUS OR DEVICE, WITHOUT THE PRIOR WRITTEN AUTHORIZATION OF HARSCO.

CHANGE #		REVISION	DR	DATE
EC501056	A	NEW RELEASE	CJW	05/11
EC501405	B	UPDATE AS BUILT	CJW	06/11

DRAWING TITLE/DESCRIPTION:
MCB ASSEMBLY
Assembly

MACHINE TYPE-MODEL:
MARK IV

E3 PROJECT FILE NAME:
MARK IV HD

SHEET NUMBER: 4
NUMBER OF JUPITER SHEETS: 0
TOTAL NUMBER OF SHEETS: 4

DRAWN BY: CJW
REL. DATE: 05/11
SIZE: D
SCALE:

HARSCO RAIL

E3 DRAWING

5007951

Jupiter Modules Location

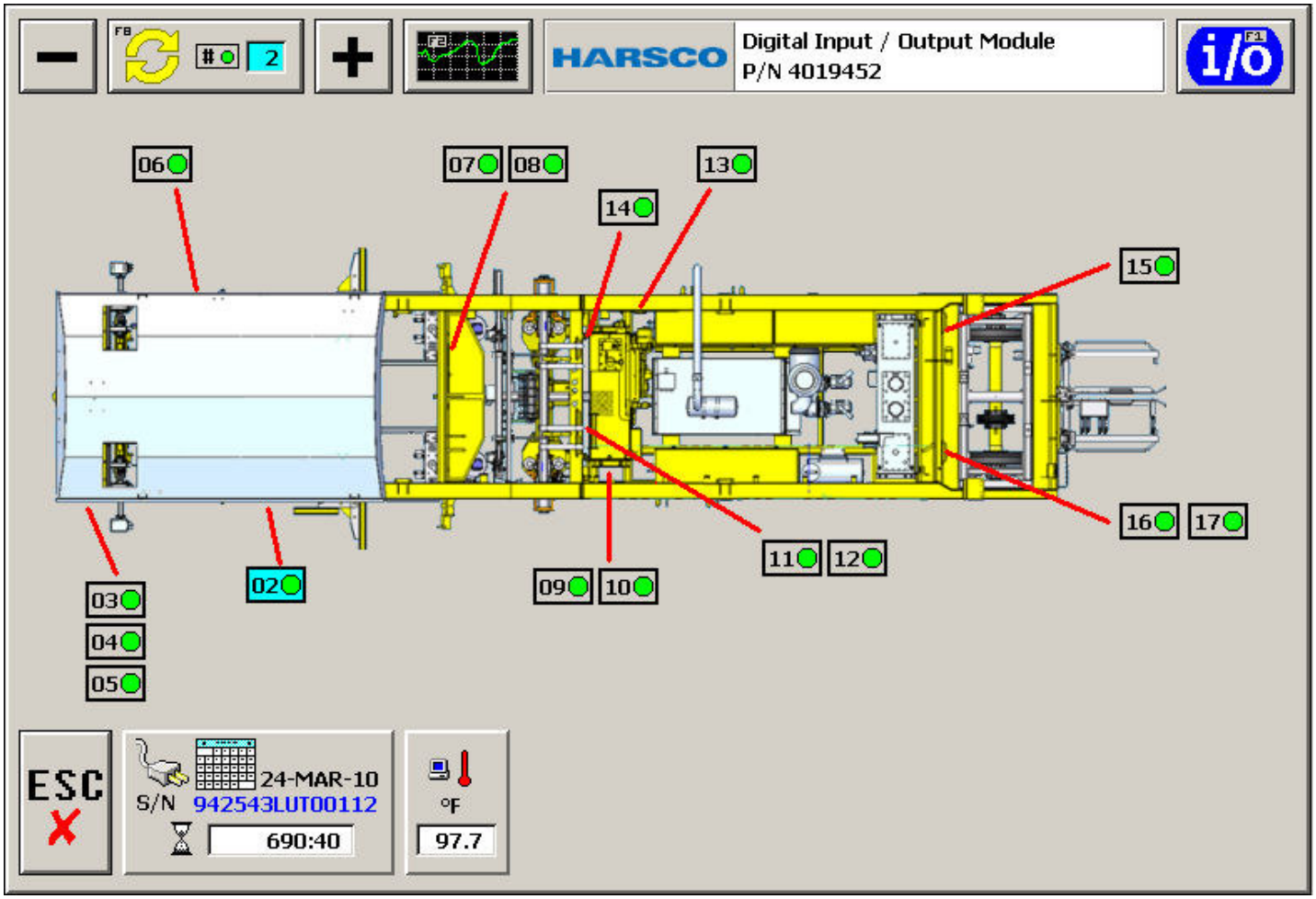

Figure 7-4

ELECTRICAL SCHEMATIC READING

Electrical schematic diagrams are graphic pictures of how an electrical system has been assembled. Symbols represent the components used in the system and lines show the wires or conductors within that electrical system. Schematic diagrams DO NOT show physical characteristics or locations of individual components nor does it show the lengths or actual location of wiring. Note, all circuit breakers and most standard relays are page related.

Drawing Numbers

Each schematic has its own drawing number which identifies a specific electrical system for a specific machine. This number can be found in the lower or upper corners of each print. Also found on each drawing is the name or description of the electrical drawing, usually naming the machine. Be sure the drawing is the correct schematic for the machine.

NOTE: Although two drawings look exactly the same, if a number difference exists, there will be a distinct difference in electrical requirements.

Number of Sheets Used

Some schematic drawings require more than one sheet to show the complete electrical system. Shown below is the drawing description box which is located on the bottom right corner of the electrical schematic. Refer to Figure 7-5.

CHANGE #		REVISION	DR	DATE
EC501060	A	NEW RELEASE	CJW	05/11
EC501420	B	UPDATE AS BUILT	CJW	06/11

DRAWING TITLE/DESCRIPTION: ELECTRICAL SCHEMATIC Starting and Engine	SHEET NUMBER 1	DRAWN BY: CJW	HARSCO RAIL
MACHINE TYPE-MODEL: MARK IV	NUMBER OF JUPITER SHEETS 19	REL. DATE: 05/11	E3 DRAWING
E3 PROJECT FILE NAME: MARK IV HD	TOTAL NUMBER OF SHEETS 28	SIZE: D / SCALE:	5007950

Figure 7-5

On the bottom left hand corner of the drawing description box is a section containing the sheet number information. This box will read sheet 1 out of 34 which indicates that we are on sheet 1 and the print continues on sheet 2. Sheet 2 out of 34 indicates we are on sheet 2 and the print continues on sheet 3. This numbering sequence will continue until we reach, for example, sheet 32 out of 34. This indicates that sheet 34 is the last page of the drawing.

How To Use The Schematics

The schematics are equipped with a method for quick identification of individual components and for directing someone to a particular point on the drawing. To locate a component, use the reference numbers which can be found running horizontally along the schematic. To locate a component state the number directly below the component.

Harsco Rail now uses DIN symbols and drawings on the electrical schematics. Wire #'s are on the line and an arrow with a number after it is where the wire is going to or coming from. Example in Figure 7-6.

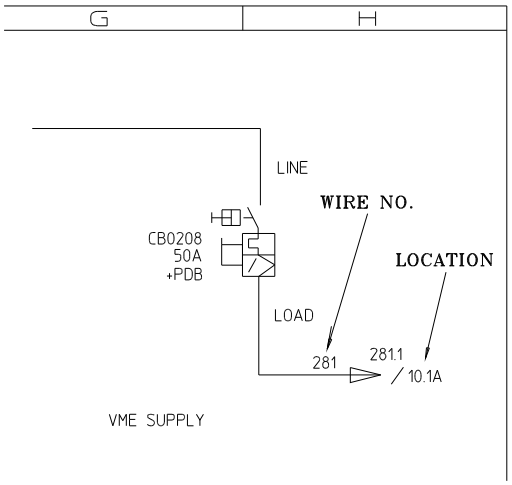

Figure 7-6

- Non Jupiter wire numbers indicate the page on which the wire number originates.
- Wire numbers connected to Jupiter Modules (channels 1 - 8) will have wire numbers where the first two digits indicate the channel of the module.

Jupiter II MKIV
Electrical Schematics
28 Sheets

MARK IV

JUPITER II

TABLE OF CONTENTS	
TOC	Contents
1	Starting and Engine
2	24 VDC Control
3	24 VDC Control
4	Circuit Breakers and Power Supply
5	Equipment Options
6	Equipment Options
J01	CAN:01 Jambox
J02A	CAN:02 Scanner Module
J02B	CAN:02 Scanner Module
J03	CAN:03 Analog Module
J04	CAN:04 Digital Module
J05	CAN:05 Digital Module
J06	CAN:06 HDIO Module
J07	CAN:07 Analog Module
J08	CAN:08 Digital Module
J09	CAN:09 Digital Module
J10	CAN:10 Digital Module
J11	CAN:11 Digital Module
J12	CAN:12 Digital Module
J13	CAN:13 Digital Module
J14	CAN:14 Analog Module
J15	CAN:15 Digital Module
J16	CAN:16 Digital Module
J17	CAN:17 Analog Module
J18	CAN:18 Digital Module
X1	Reference
X2	Reference

LOCATION KEY	
CARR	LOCATED ON THE ENDS OF CARRIAGE
ECP	ENGINE CONTROL PANEL INSIDE OF MAIN CAB
ENGINE	ON OR CLOSE TO ENGINE
ENG_LF-S	LEFT SIDE OF ENGINE
ENG-MISC	IN THE ENGINE COMPARTMENT
ENG_RT-S	RIGHT SIDE OF ENGINE
F_DRV_AXLE	FRONT DRIVE AXLE ON REAR BOGEY
FRONT	FRONT SIDE OF MACHINE
FUEL_TK	FUEL TANK IN REAR OF MACHINE
HYD_RES	HYDRAULIC TANK IN ENGINE COMPARTMENT
LHC	LEFT HAND CONSOLE IN MAIN CAB
LF-FRT	LEFT FRONT SIDE OF MACHINE
LF_JBOX	LEFT JUNCTION BOX IN ENGINE COMPARTMENT
LF_RR	LEFT REAR SIDE OF MACHINE
LF_SIDE	LEFT SIDE OF ENGINE COMPARTMENT
MAIN_CAB	LOCATED IN MAIN CAB
MAIN_JB	MAIN JUNCTION BOX IN MAIN CAB
MCB	MAIN CONTROL BOARD INSIDE OF MAIN CAB
PDB	POWER DISTRIBUTION BOX LOCATED ON LEFT SIDE OF MACHINE
R_DRV_AXLE	REAR DRIVE AXLE ON REAR BOGEY
REAR	REAR SIDE OF MACHINE
RHC	RIGHT HAND CONSOLE IN MAIN CAB
RT-FRT	RIGHT FRONT SIDE OF MACHINE
RT-RR	RIGHT REAR SIDE OF MACHINE
RT_SIDE	RIGHT SIDE OF ENGINE COMPARTMENT
UN_H_RES	LOCATED UNDER HYDRAULIC RESEVOIR
UN_W_TANK	UNDER LEFT SIDE OF WATER TANK
WATER	WATER TANK IN ENGINE COMPARTMENT

TERMINAL BLOCK LAYOUT	
TB1-	MAIN CONTROL BOARD (MCB)
TB2-	MAIN CONTROL BOARD (MCB)
TB3-	MAIN CONTROL BOARD (MCB)
TB4-	MAIN CONTROL BOARD (MCB)
TB7-	PROJECTOR BUGGY
TB10-	ENGINE CONTROL PANEL (ECP)
TB15-	RIGHT HAND CONSOLE (RHC)
TB17-	LEFT HAND CONSOLE (LHC)
TB20-	FRONT JUNCTION BOX
TB21-	LEFT SIDE JUNCTION BOX (OPTIONAL)
TB22-	RIGHT SIDE JUNCTION BOX (OPTIONAL)
TB30-	POWER DISTRIBUTION BOX (PDB)
TB31-	POWER DISTRIBUTION BOX (PDB)
TB32-	POWER DISTRIBUTION BOX (PDB)

REFERENCE DOCUMENTATION	
5007950	ELECTRICAL SCHEMATIC
5007951	MAIN CONTROL BOARD (MCB) ASSEMBLY
5007952	POWER DISTROBUTION BOX (PDB) ASSEMBLY
5007953	ENGINE CONTROL PANEL (ECP) ASSEMBLY
5007954	LEFT ARMREST ASSEMBLY
5007955	RIGHT ARMREST ASSEMBLY
5007956	JUPITER SYSTEM INSTALLATION
5007957	CAB WIRING
5007958	INTERCONNECT WIRING

CONFIDENTIAL

©COPYRIGHT 2011 HARSCO. THIS DRAWING OR DOCUMENT IS THE PROPERTY OF HARSCO AND EMBODIES CONFIDENTIAL INFORMATION, TRADE SECRET INFORMATION, AND/OR KNOW-HOW THAT IS THE PROPERTY OF HARSCO. BY ACCEPTING THIS DRAWING OR DOCUMENT, THE RECIPIENT AGREES (1) NOT TO PROVIDE, OR OTHERWISE MAKE AVAILABLE, THE DRAWING OR DOCUMENT, OR ANY INFORMATION OR KNOW-HOW EMBODIED THEREIN, TO ANY THIRD PARTY AND (2) NOT TO REPRODUCE OR USE THE DRAWING OR DOCUMENT TO MANUFACTURE ANY APPARATUS OR DEVICE, WITHOUT THE PRIOR WRITTEN AUTHORIZATION OF HARSCO.

CHANGE #		REVISION	DR	DATE
EC501060	A	NEW RELEASE	CJW	05/11
EC501420	B	UPDATE AS BUILT	CJW	06/11

DRAWING TITLE/DESCRIPTION: ELECTRICAL SCHEMATIC Contents

MACHINE TYPE-MODEL: MARK IV

E3 PROJECT FILE NAME: MARK IV HD

SHEET NUMBER: TOC

NUMBER OF JUPITER SHEETS: 19

TOTAL NUMBER OF SHEETS: 28

DRAWN BY: CJW

REL. DATE: 05/11

SIZE: D

SCALE:

HARSCO RAIL

E3 DRAWING

5007950

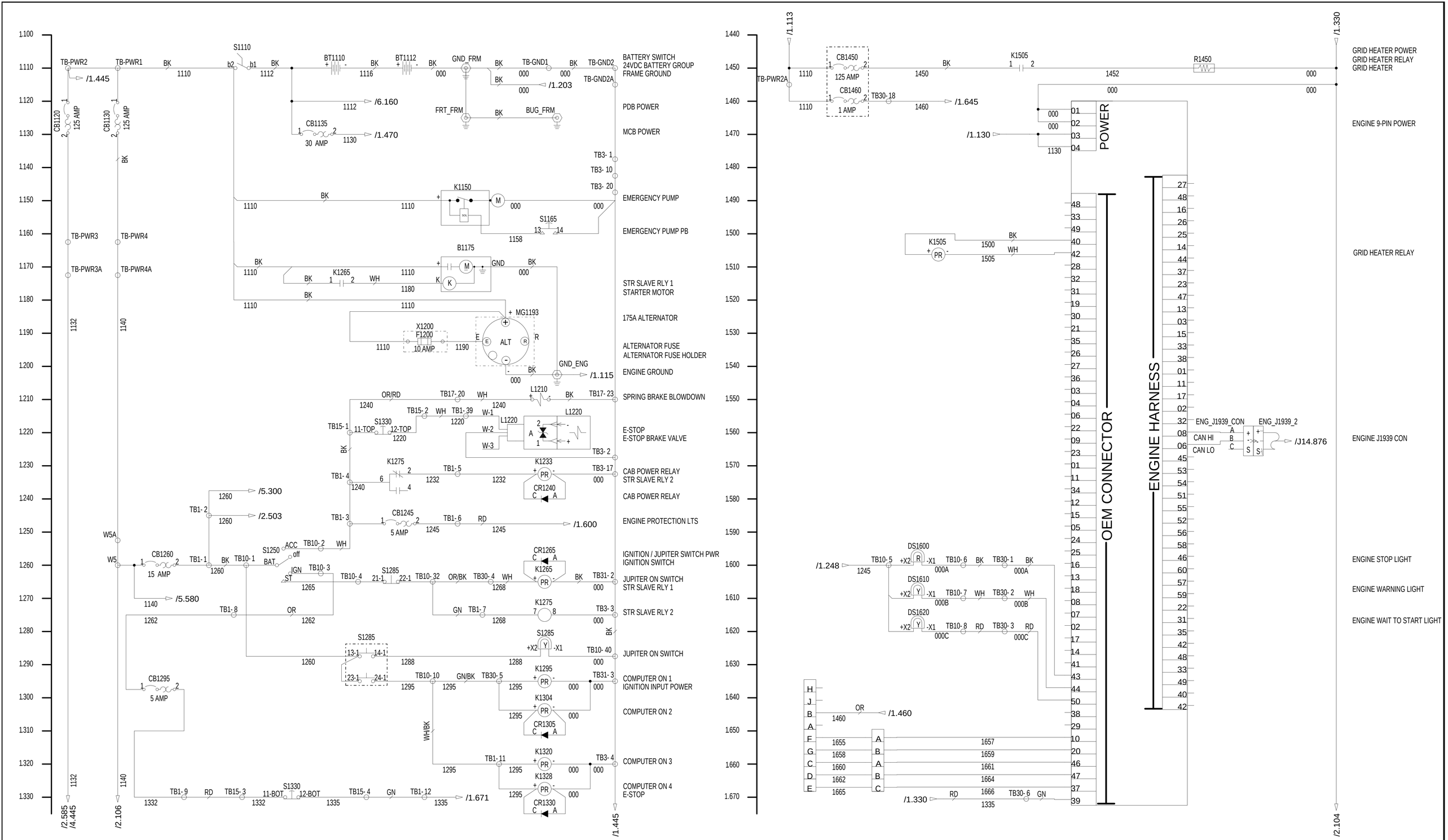

CONFIDENTIAL

©COPYRIGHT 2011 HARSCO. THIS DRAWING OR DOCUMENT IS THE PROPERTY OF HARSCO AND EMBODIES CONFIDENTIAL INFORMATION, TRADE SECRET INFORMATION, AND/OR KNOW-HOW THAT IS THE PROPERTY OF HARSCO. BY ACCEPTING THIS DRAWING OR DOCUMENT, THE RECIPIENT AGREES (1) NOT TO PROVIDE, OR OTHERWISE MAKE AVAILABLE, THE DRAWING OR DOCUMENT, OR ANY INFORMATION OR KNOW-HOW EMBODIED THEREIN, TO ANY THIRD PARTY AND (2) NOT TO REPRODUCE OR USE THE DRAWING OR DOCUMENT TO MANUFACTURE ANY APPARATUS OR DEVICE, WITHOUT THE PRIOR WRITTEN AUTHORIZATION OF HARSCO.

CHANGE #		REVISION	DR	DATE
EC501060	A	NEW RELEASE	CJW	05/11
EC501420	B	UPDATE AS BUILT	CJW	06/11

DRAWING TITLE/DESCRIPTION:
ELECTRICAL SCHEMATIC
Starting and Engine

MACHINE TYPE-MODEL:
MARK IV

E3 PROJECT FILE NAME:
MARK IV HD

SHEET NUMBER: 1
NUMBER OF JUPITER SHEETS: 19
TOTAL NUMBER OF SHEETS: 28

DRAWN BY: CJW
REL. DATE: 05/11
SIZE: D
SCALE:

HARSCO RAIL

E3 DRAWING
5007950

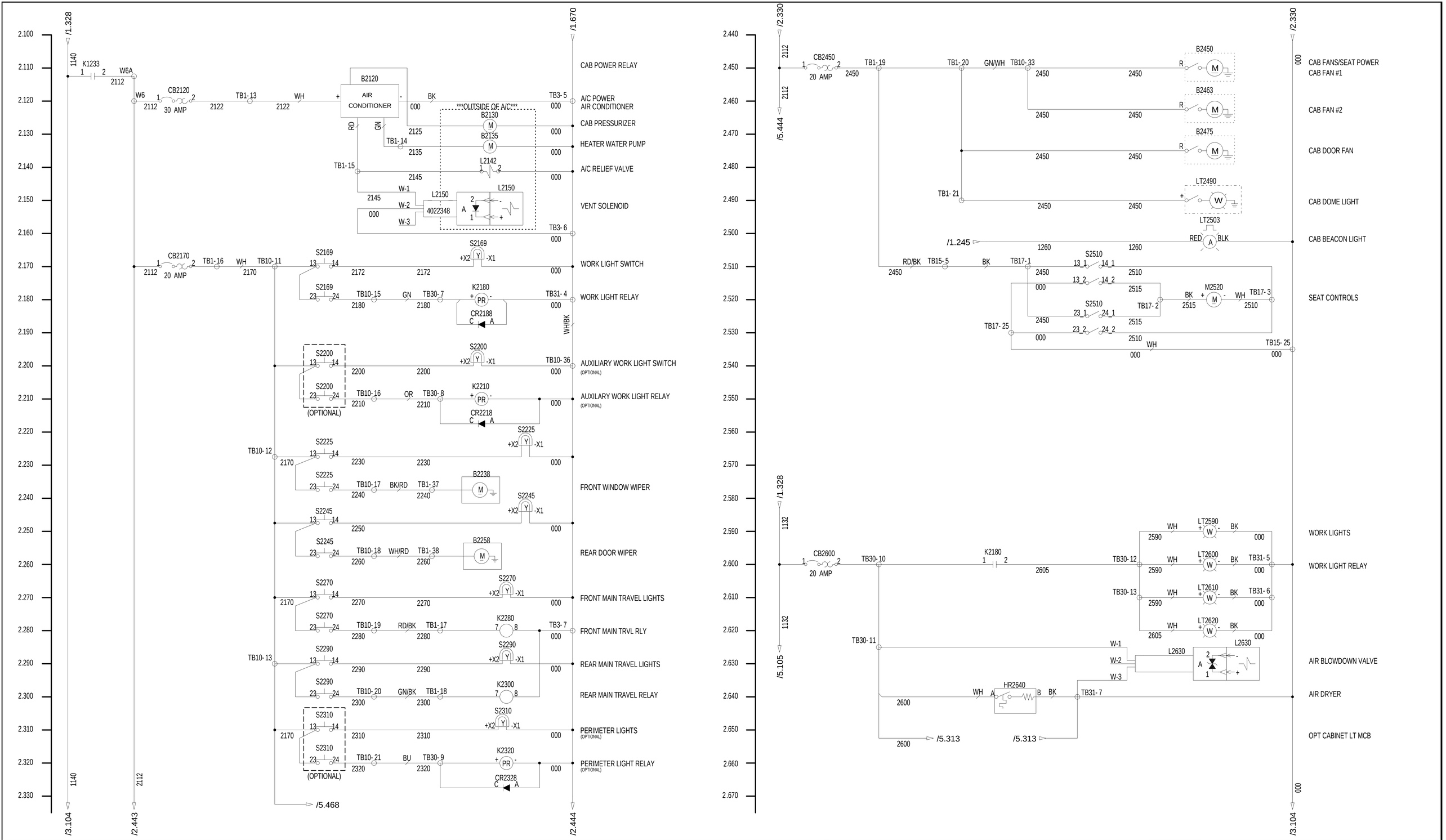

CONFIDENTIAL

©COPYRIGHT 2011 HARSCO. THIS DRAWING OR DOCUMENT IS THE PROPERTY OF HARSCO AND EMBODIES CONFIDENTIAL INFORMATION, TRADE SECRET INFORMATION, AND/OR KNOW-HOW THAT IS THE PROPERTY OF HARSCO. BY ACCEPTING THIS DRAWING OR DOCUMENT, THE RECIPIENT AGREES (1) NOT TO PROVIDE, OR OTHERWISE MAKE AVAILABLE, THE DRAWING OR DOCUMENT, OR ANY INFORMATION OR KNOW-HOW EMBODIED THEREIN, TO ANY THIRD PARTY AND (2) NOT TO REPRODUCE OR USE THE DRAWING OR DOCUMENT TO MANUFACTURE ANY APPARATUS OR DEVICE, WITHOUT THE PRIOR WRITTEN AUTHORIZATION OF HARSCO.

CHANGE #		REVISION	DR	DATE
EC501060	A	NEW RELEASE	CJW	05/11
EC501420	B	UPDATE AS BUILT	CJW	06/11

DRAWING TITLE/DESCRIPTION: ELECTRICAL SCHEMATIC 24VDC Control

MACHINE TYPE-MODEL: MARK IV

E3 PROJECT FILE NAME: MARK IV HD

SHEET NUMBER: 2

NUMBER OF JUPITER SHEETS: 19

TOTAL NUMBER OF SHEETS: 28

DRAWN BY: CJW

REL. DATE: 05/11

SIZE: D

SCALE:

HARSCO RAIL

E3 DRAWING

5007950

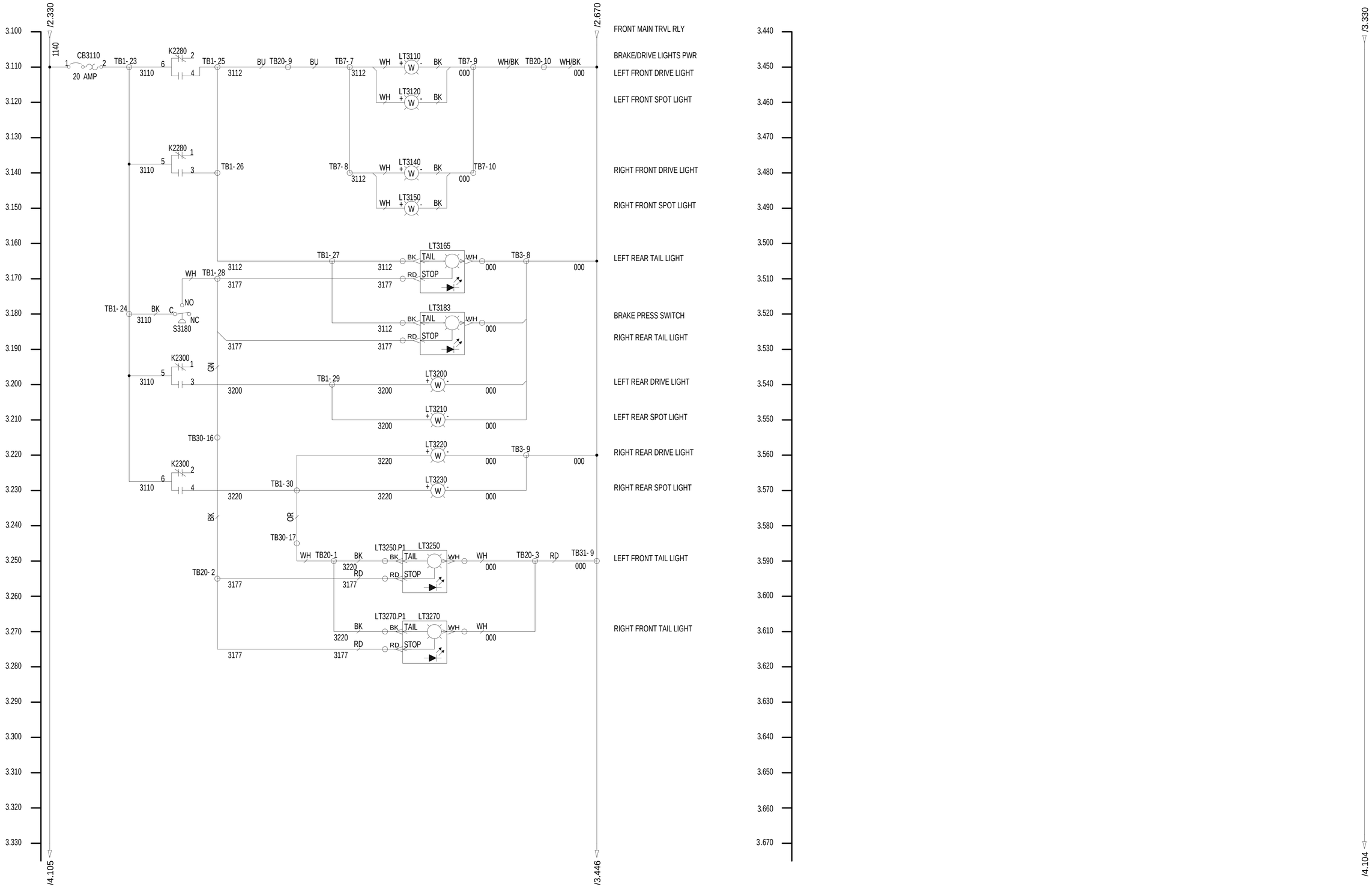

CONFIDENTIAL

©COPYRIGHT 2011 HARSCO. THIS DRAWING OR DOCUMENT IS THE PROPERTY OF HARSCO AND EMBODIES CONFIDENTIAL INFORMATION, TRADE SECRET INFORMATION, AND/OR KNOW-HOW THAT IS THE PROPERTY OF HARSCO. BY ACCEPTING THIS DRAWING OR DOCUMENT, THE RECIPIENT AGREES (1) NOT TO PROVIDE, OR OTHERWISE MAKE AVAILABLE, THE DRAWING OR DOCUMENT, OR ANY INFORMATION OR KNOW-HOW EMBODIED THEREIN, TO ANY THIRD PARTY AND (2) NOT TO REPRODUCE OR USE THE DRAWING OR DOCUMENT TO MANUFACTURE ANY APPARATUS OR DEVICE, WITHOUT THE PRIOR WRITTEN AUTHORIZATION OF HARSCO.

CHANGE #		REVISION	DR	DATE
EC501060	A	NEW RELEASE	CJW	05/11
EC501420	B	UPDATE AS BUILT	CJW	06/11

DRAWING TITLE/DESCRIPTION: ELECTRICAL SCHEMATIC 24VDC Control

MACHINE TYPE-MODEL: MARK IV

E3 PROJECT FILE NAME: MARK IV HD

SHEET NUMBER: 3

NUMBER OF JUPITER SHEETS: 19

TOTAL NUMBER OF SHEETS: 28

DRAWN BY: CJW

REL. DATE: 05/11

SIZE: D

SCALE:

HARSCO RAIL

E3 DRAWING

5007950

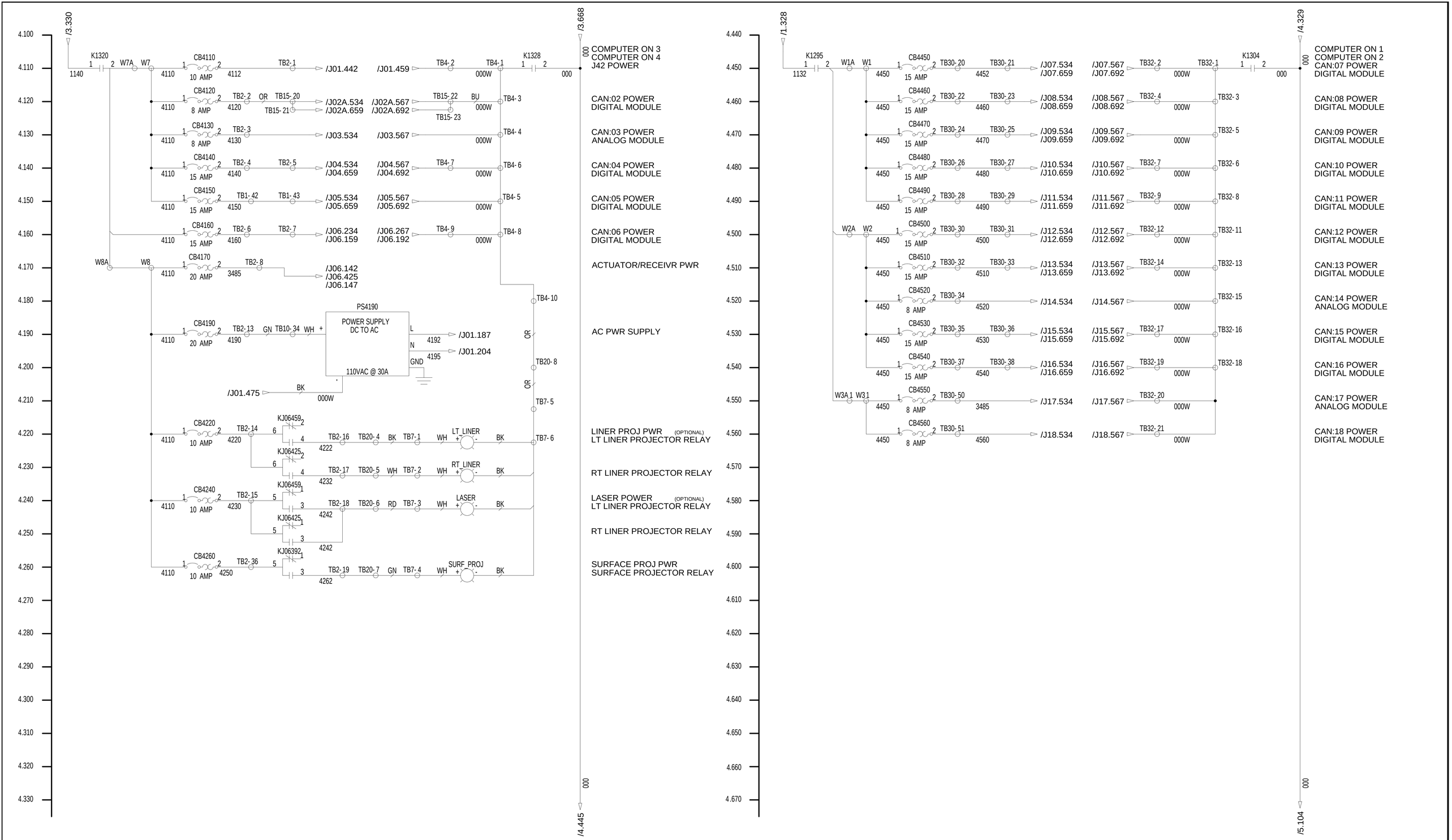

CONFIDENTIAL

©COPYRIGHT 2011 HARSCO. THIS DRAWING OR DOCUMENT IS THE PROPERTY OF HARSCO AND EMBODIES CONFIDENTIAL INFORMATION, TRADE SECRET INFORMATION, AND/OR KNOW-HOW THAT IS THE PROPERTY OF HARSCO. BY ACCEPTING THIS DRAWING OR DOCUMENT, THE RECIPIENT AGREES (1) NOT TO PROVIDE, OR OTHERWISE MAKE AVAILABLE, THE DRAWING OR DOCUMENT, OR ANY INFORMATION OR KNOW-HOW EMBODIED THEREIN, TO ANY THIRD PARTY AND (2) NOT TO REPRODUCE OR USE THE DRAWING OR DOCUMENT TO MANUFACTURE ANY APPARATUS OR DEVICE, WITHOUT THE PRIOR WRITTEN AUTHORIZATION OF HARSCO.

CHANGE #		REVISION	DR	DATE
EC501060	A	NEW REALEASE	CJW	05/11
EC501420	B	UPDATE AS BUILT	CJW	06/11

DRAWING TITLE/DESCRIPTION:
ELECTRICAL SCHEMATIC
Breakers and Power Supply

MACHINE TYPE-MODEL:
MARK IV

E3 PROJECT FILE NAME:
MARK IV HD

SHEET NUMBER: 4
NUMBER OF JUPITER SHEETS: 19
TOTAL NUMBER OF SHEETS: 28

DRAWN BY: CJW
REL. DATE: 05/11
SIZE: D
SCALE:

HARSCO RAIL

E3 DRAWING
5007950

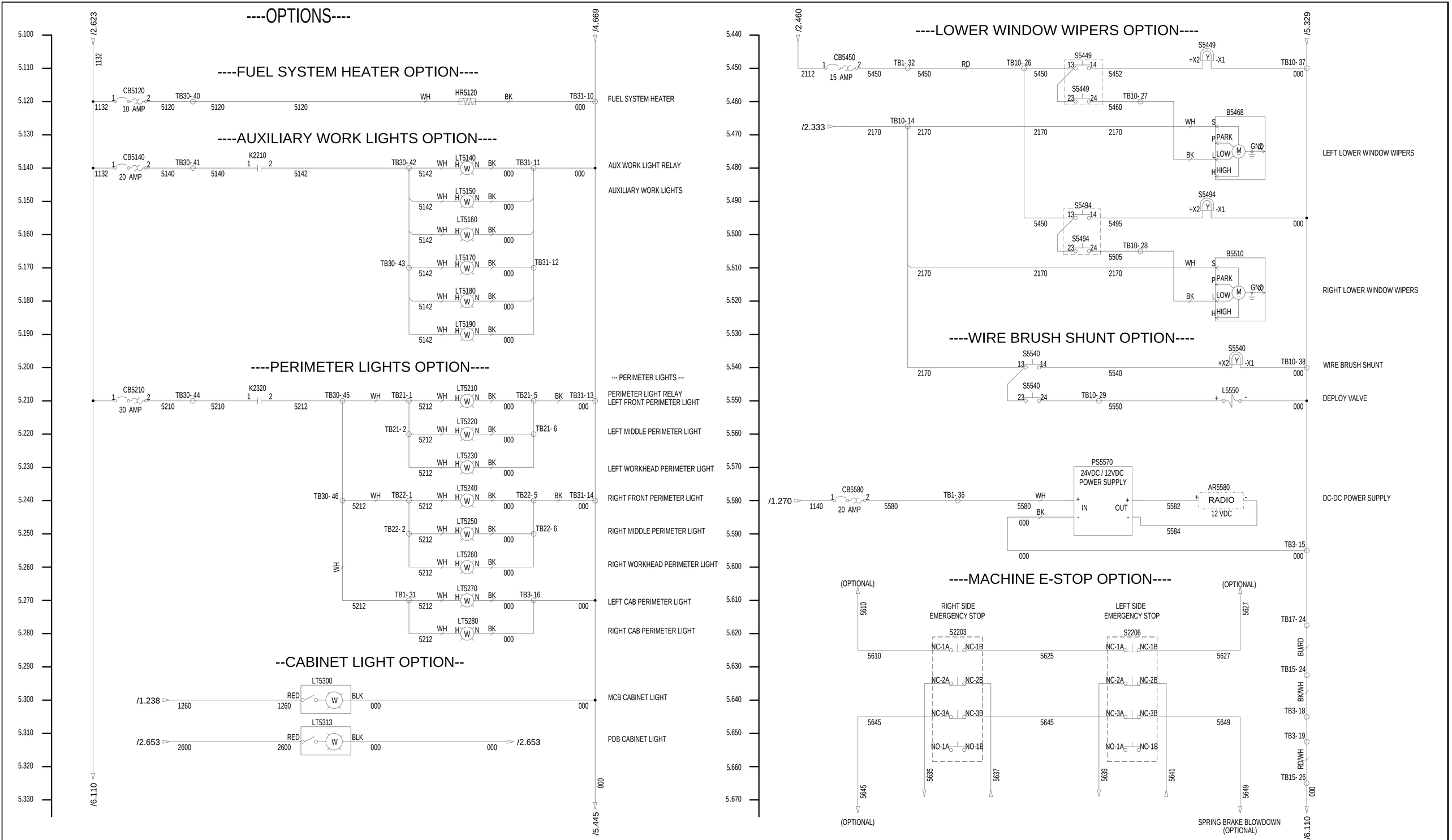

CONFIDENTIAL

©COPYRIGHT 2011 HARSCO. THIS DRAWING OR DOCUMENT IS THE PROPERTY OF HARSCO AND EMBODIES CONFIDENTIAL INFORMATION, TRADE SECRET INFORMATION, AND/OR KNOW-HOW THAT IS THE PROPERTY OF HARSCO. BY ACCEPTING THIS DRAWING OR DOCUMENT, THE RECIPIENT AGREES (1) NOT TO PROVIDE, OR OTHERWISE MAKE AVAILABLE, THE DRAWING OR DOCUMENT, OR ANY INFORMATION OR KNOW-HOW EMBODIED THEREIN, TO ANY THIRD PARTY AND (2) NOT TO REPRODUCE OR USE THE DRAWING OR DOCUMENT TO MANUFACTURE ANY APPARATUS OR DEVICE, WITHOUT THE PRIOR WRITTEN AUTHORIZATION OF HARSCO.

CHANGE #		REVISION	DR	DATE
EC501060	A	NEW RELEASE	CJW	05/11
EC501420	B	UPDATE AS BUILT	CJW	06/11

DRAWING TITLE/DESCRIPTION: ELECTRICAL SCHEMATIC Equipment Options

MACHINE TYPE-MODEL: MARK IV

E3 PROJECT FILE NAME: MARK IV HD

SHEET NUMBER: 5

NUMBER OF JUPITER SHEETS: 19

TOTAL NUMBER OF SHEETS: 28

DRAWN BY: CJW

REL. DATE: 05/11

SIZE: D

SCALE:

HARSCO RAIL

E3 DRAWING

5007950

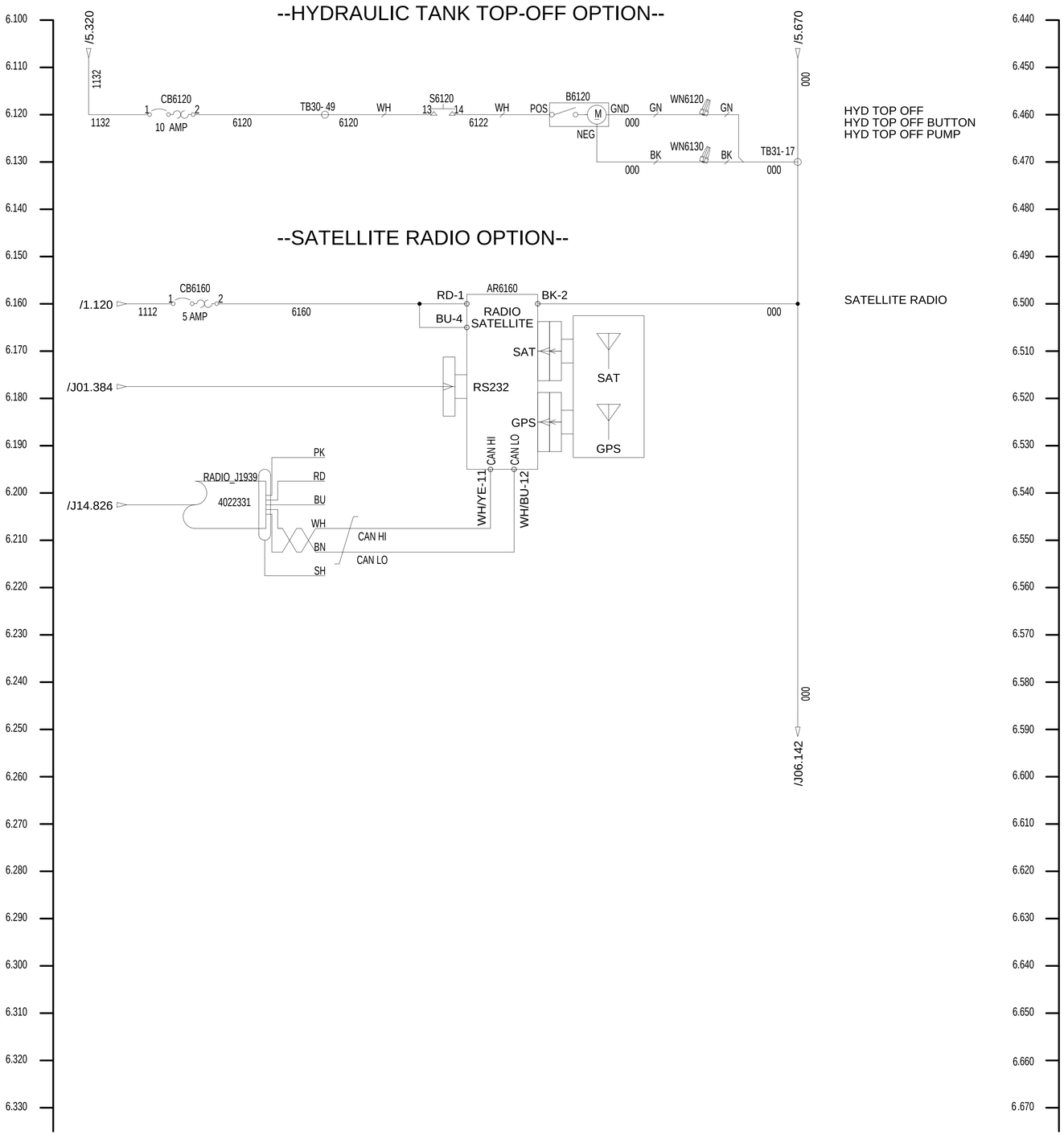

CONFIDENTIAL	CHANGE #		REVISION	DR	DATE
	EC501060	A	NEW RELEASE	CJW	05/11
	EC501420	B	UPDATE AS BUILT	CJW	06/11

©COPYRIGHT 2011 HARSCO. THIS DRAWING OR DOCUMENT IS THE PROPERTY OF HARSCO AND EMBODIES CONFIDENTIAL INFORMATION, TRADE SECRET INFORMATION, AND/OR KNOW-HOW THAT IS THE PROPERTY OF HARSCO. BY ACCEPTING THIS DRAWING OR DOCUMENT, THE RECIPIENT AGREES (1) NOT TO PROVIDE, OR OTHERWISE MAKE AVAILABLE, THE DRAWING OR DOCUMENT, OR ANY INFORMATION OR KNOW-HOW EMBODIED THEREIN, TO ANY THIRD PARTY AND (2) NOT TO REPRODUCE OR USE THE DRAWING OR DOCUMENT TO MANUFACTURE ANY APPARATUS OR DEVICE, WITHOUT THE PRIOR WRITTEN AUTHORIZATION OF HARSCO.

DRAWING TITLE/DESCRIPTION:
ELECTRICAL SCHEMATIC
Equipment Options

MACHINE TYPE-MODEL:
MARK IV

E3 PROJECT FILE NAME:
MARK IV HD

SHEET NUMBER: 6
NUMBER OF JUPITER SHEETS: 19
TOTAL NUMBER OF SHEETS: 28

DRAWN BY: CJW
REL. DATE: 05/11
SIZE: D
SCALE:

HARSCO RAIL

E3 DRAWING
5007950

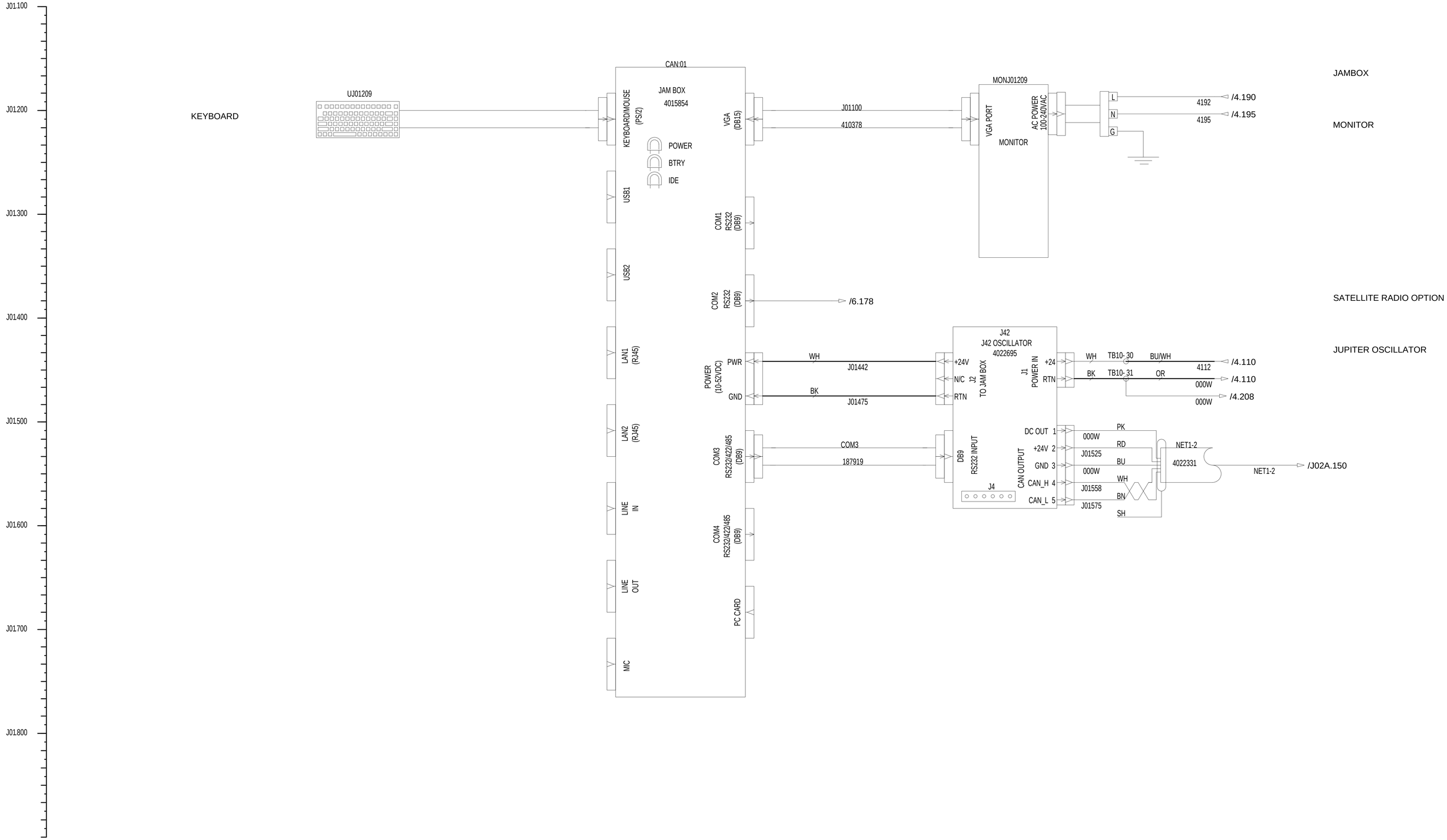

CONFIDENTIAL

©COPYRIGHT 2011 HARSCO. THIS DRAWING OR DOCUMENT IS THE PROPERTY OF HARSCO AND EMBODIES CONFIDENTIAL INFORMATION, TRADE SECRET INFORMATION, AND/OR KNOW-HOW THAT IS THE PROPERTY OF HARSCO. BY ACCEPTING THIS DRAWING OR DOCUMENT, THE RECIPIENT AGREES (1) NOT TO PROVIDE, OR OTHERWISE MAKE AVAILABLE, THE DRAWING OR DOCUMENT, OR ANY INFORMATION OR KNOW-HOW EMBODIED THEREIN, TO ANY THIRD PARTY AND (2) NOT TO REPRODUCE OR USE THE DRAWING OR DOCUMENT TO MANUFACTURE ANY APPARATUS OR DEVICE, WITHOUT THE PRIOR WRITTEN AUTHORIZATION OF HARSCO.

CHANGE #		REVISION	DR	DATE
EC501060	A	NEW RELEASE	CJW	05/11
EC501420	B	UPDATE AS BUILT	CJW	06/11

DRAWING TITLE/DESCRIPTION:
ELECTRICAL SCHEMATIC
Can:01 Jambox

MACHINE TYPE-MODEL:
MARK IV

E3 PROJECT FILE NAME:
MARK IV HD

SHEET NUMBER: J01
NUMBER OF JUPITER SHEETS: 19
TOTAL NUMBER OF SHEETS: 28

DRAWN BY: CJW
REL. DATE: 05/11
SIZE: D
SCALE:

HARSCO RAIL

E3 DRAWING
5007950

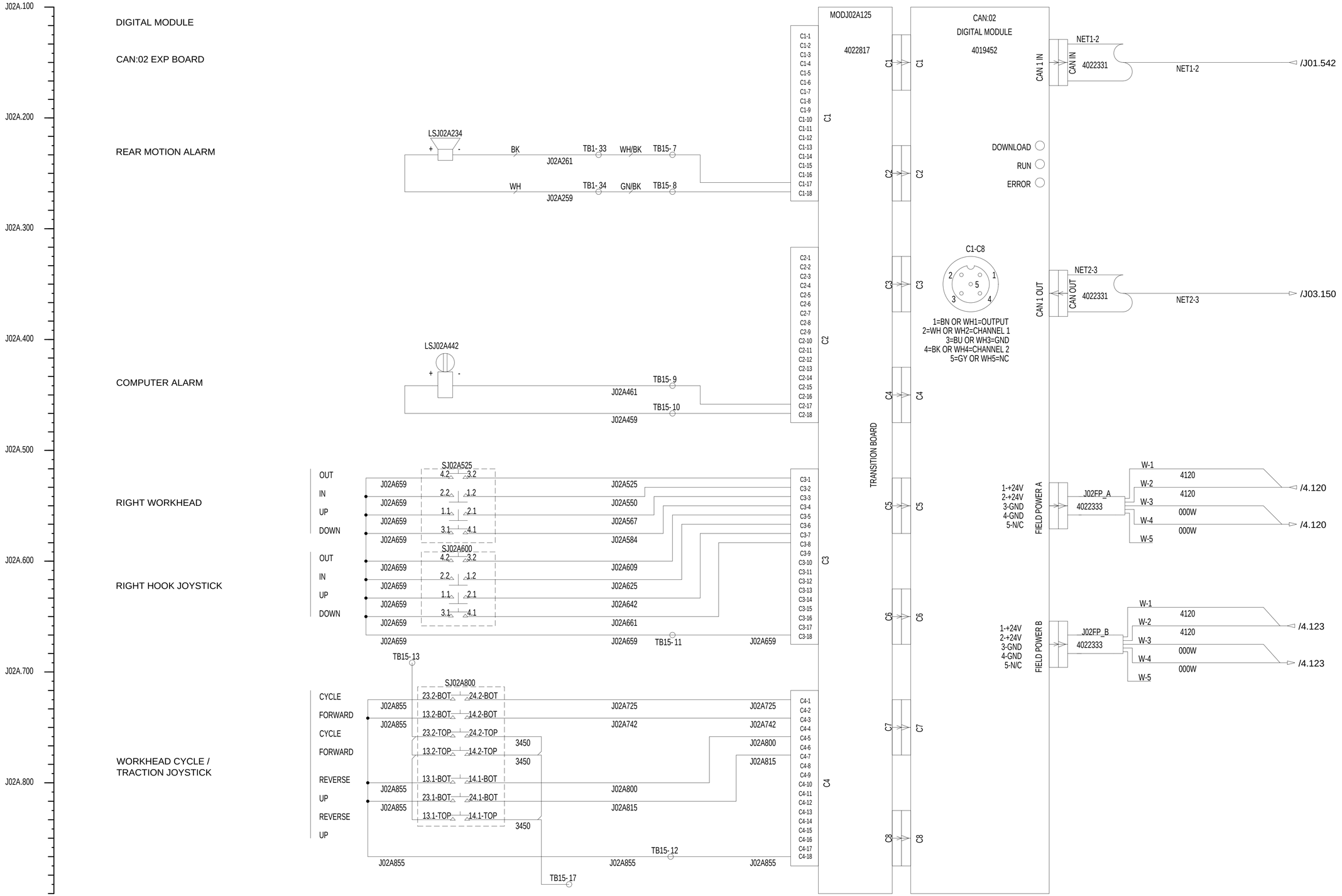

CONFIDENTIAL

©COPYRIGHT 2011 HARSCO. THIS DRAWING OR DOCUMENT IS THE PROPERTY OF HARSCO AND EMBODIES CONFIDENTIAL INFORMATION, TRADE SECRET INFORMATION, AND/OR KNOW-HOW THAT IS THE PROPERTY OF HARSCO. BY ACCEPTING THIS DRAWING OR DOCUMENT, THE RECIPIENT AGREES (1) NOT TO PROVIDE, OR OTHERWISE MAKE AVAILABLE, THE DRAWING OR DOCUMENT, OR ANY INFORMATION OR KNOW-HOW EMBODIED THEREIN, TO ANY THIRD PARTY AND (2) NOT TO REPRODUCE OR USE THE DRAWING OR DOCUMENT TO MANUFACTURE ANY APPARATUS OR DEVICE, WITHOUT THE PRIOR WRITTEN AUTHORIZATION OF HARSCO.

CHANGE #		REVISION	DR	DATE
EC501060	A	NEW RELEASE	CJW	05/11
EC501420	B	UPDATE AS BUILT	CJW	06/11

DRAWING TITLE/DESCRIPTION:
ELECTRICAL SCHEMATIC
Can:02 Scanner Module

MACHINE TYPE-MODEL:
MARK IV

E3 PROJECT FILE NAME:
MARK IV HD

SHEET NUMBER: J02A
NUMBER OF JUPITER SHEETS: 19
TOTAL NUMBER OF SHEETS: 28

DRAWN BY: CJW
REL. DATE: 05/11
SIZE: D
SCALE:

HARSCO RAIL

E3 DRAWING
5007950

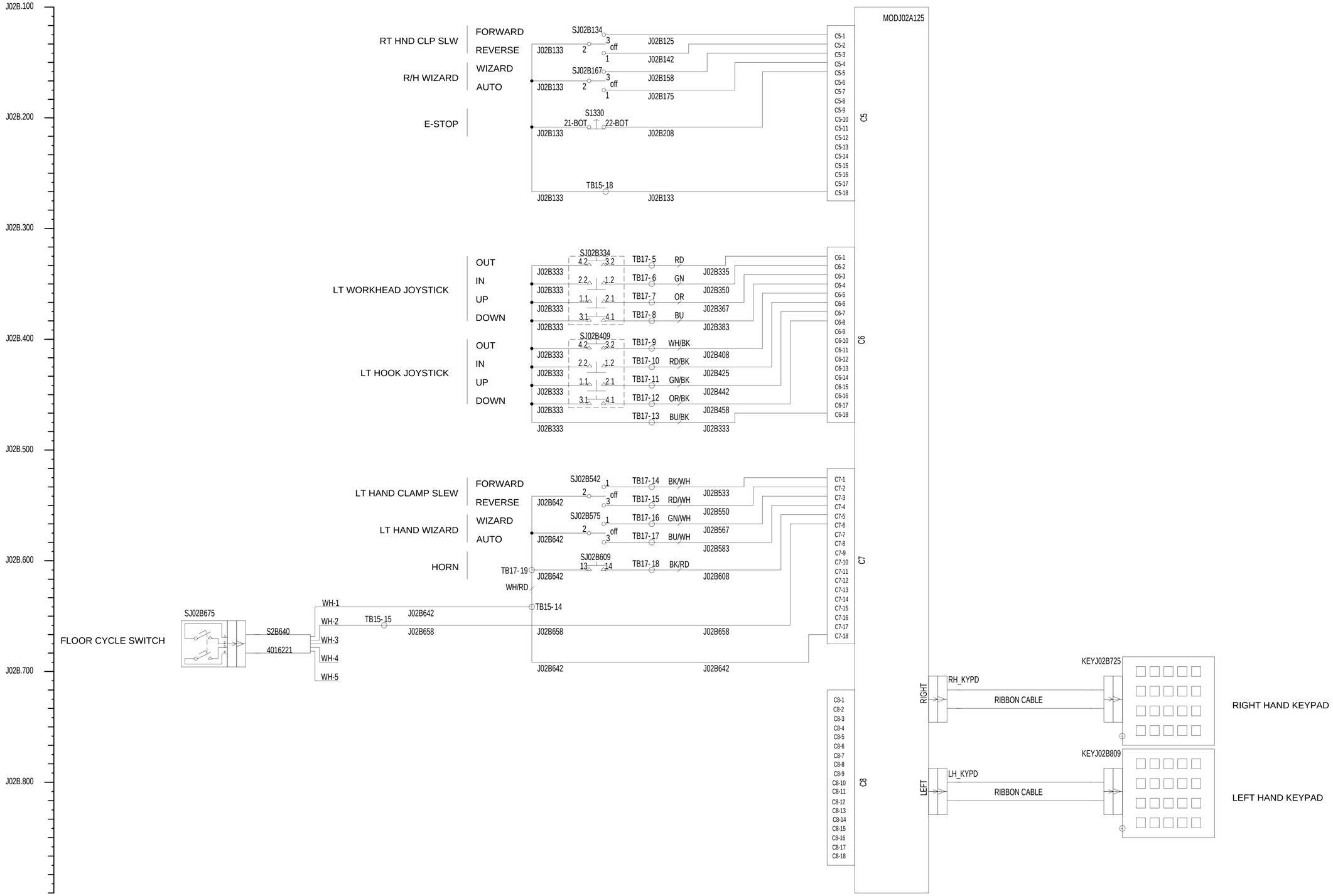

CONFIDENTIAL

©COPYRIGHT 2011 HARSCO. THIS DRAWING OR DOCUMENT IS THE PROPERTY OF HARSCO AND EMBODIES CONFIDENTIAL INFORMATION, TRADE SECRET INFORMATION, AND/OR KNOW-HOW THAT IS THE PROPERTY OF HARSCO. BY ACCEPTING THIS DRAWING OR DOCUMENT, THE RECIPIENT AGREES (1) NOT TO PROVIDE, OR OTHERWISE MAKE AVAILABLE, THE DRAWING OR DOCUMENT, OR ANY INFORMATION OR KNOW-HOW EMBODIED THEREIN, TO ANY THIRD PARTY AND (2) NOT TO REPRODUCE OR USE THE DRAWING OR DOCUMENT TO MANUFACTURE ANY APPARATUS OR DEVICE, WITHOUT THE PRIOR WRITTEN AUTHORIZATION OF HARSCO.

CHANGE #		REVISION	DR	DATE
EC501060	A	NEW RELEASE	CJW	05/11
EC501420	B	UPDATE AS BUILT	CJW	06/11

DRAWING TITLE/DESCRIPTION:
ELECTRICAL SCHEMATIC
Can:02 Scanner Module

MACHINE TYPE-MODEL:
MARK IV

E3 PROJECT FILE NAME:
MARK IV HD

SHEET NUMBER: J02B
NUMBER OF JUPITER SHEETS: 19
TOTAL NUMBER OF SHEETS: 28

DRAWN BY: CJW
REL. DATE: 05/11
SIZE: D
SCALE:

HARSCO RAIL

E3 DRAWING
5007950

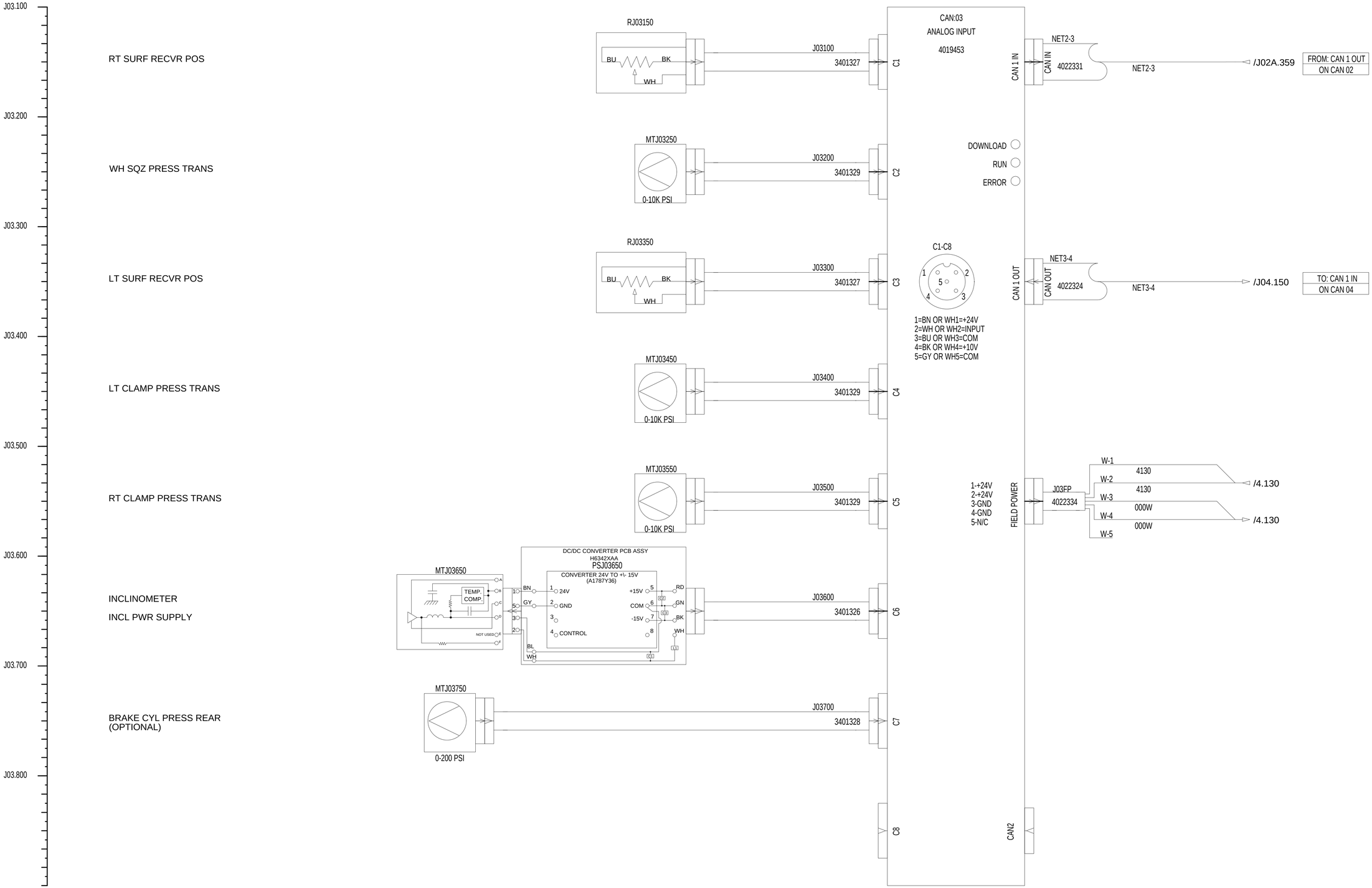

CONFIDENTIAL

©COPYRIGHT 2011 HARSCO. THIS DRAWING OR DOCUMENT IS THE PROPERTY OF HARSCO AND EMBODIES CONFIDENTIAL INFORMATION, TRADE SECRET INFORMATION, AND/OR KNOW-HOW THAT IS THE PROPERTY OF HARSCO. BY ACCEPTING THIS DRAWING OR DOCUMENT, THE RECIPIENT AGREES (1) NOT TO PROVIDE, OR OTHERWISE MAKE AVAILABLE, THE DRAWING OR DOCUMENT, OR ANY INFORMATION OR KNOW-HOW EMBODIED THEREIN, TO ANY THIRD PARTY AND (2) NOT TO REPRODUCE OR USE THE DRAWING OR DOCUMENT TO MANUFACTURE ANY APPARATUS OR DEVICE, WITHOUT THE PRIOR WRITTEN AUTHORIZATION OF HARSCO.

CHANGE #		REVISION	DR	DATE
EC501060	A	NEW RELEASE	CJW	05/11
EC501420	B	UPDATE AS BUILT	CJW	06/11

DRAWING TITLE/DESCRIPTION:
ELECTRICAL SCHEMATIC
Can:03 Analog Module

MACHINE TYPE-MODEL:
MARK IV

E3 PROJECT FILE NAME:
MARK IV HD

SHEET NUMBER: J03
NUMBER OF JUPITER SHEETS: 19
TOTAL NUMBER OF SHEETS: 28

DRAWN BY: CJW
REL. DATE: 05/11
SIZE: D
SCALE:

HARSCO RAIL

E3 DRAWING
5007950

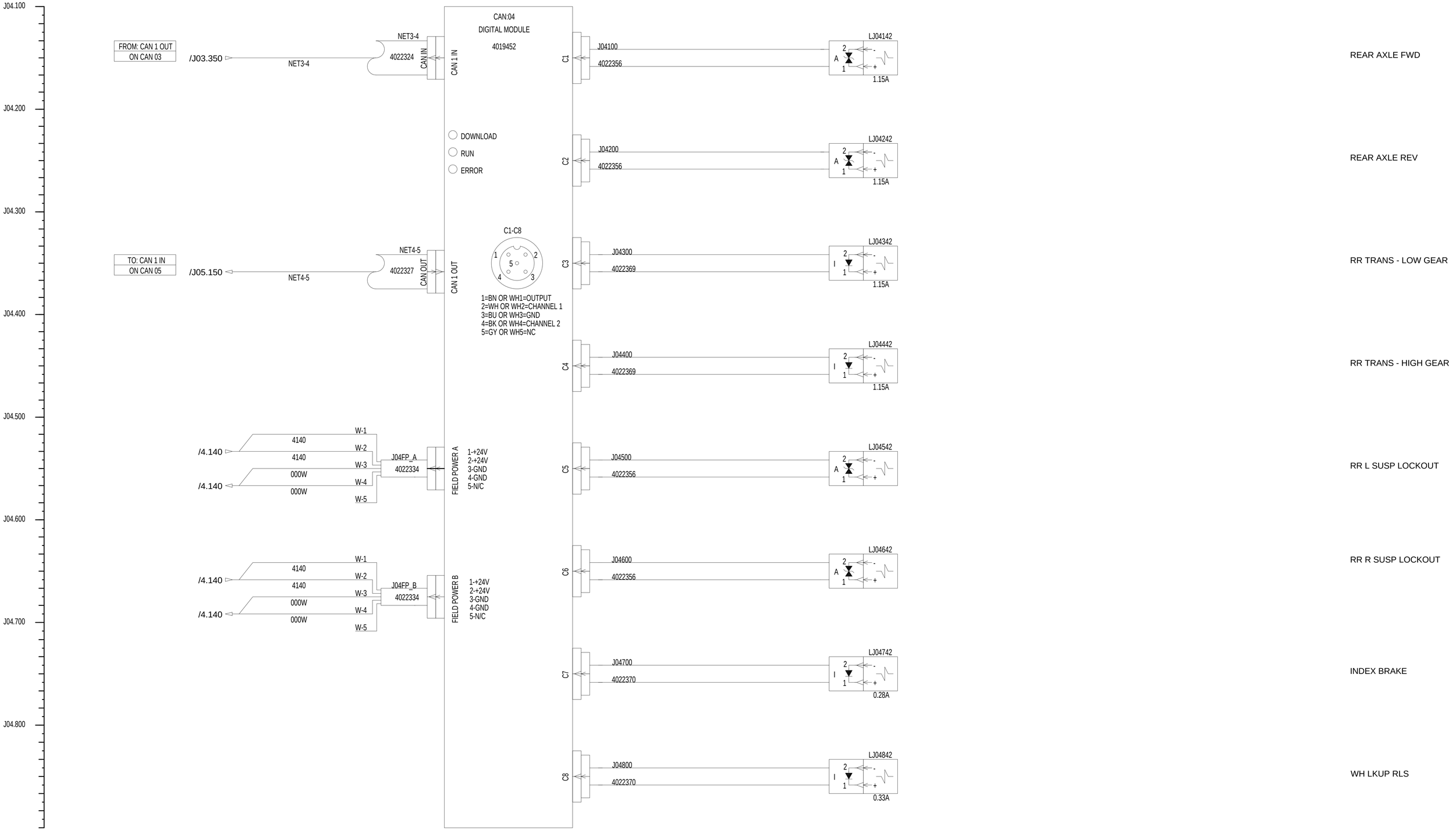

CONFIDENTIAL

©COPYRIGHT 2011 HARSCO. THIS DRAWING OR DOCUMENT IS THE PROPERTY OF HARSCO AND EMBODIES CONFIDENTIAL INFORMATION, TRADE SECRET INFORMATION, AND/OR KNOW-HOW THAT IS THE PROPERTY OF HARSCO. BY ACCEPTING THIS DRAWING OR DOCUMENT, THE RECIPIENT AGREES (1) NOT TO PROVIDE, OR OTHERWISE MAKE AVAILABLE, THE DRAWING OR DOCUMENT, OR ANY INFORMATION OR KNOW-HOW EMBODIED THEREIN, TO ANY THIRD PARTY AND (2) NOT TO REPRODUCE OR USE THE DRAWING OR DOCUMENT TO MANUFACTURE ANY APPARATUS OR DEVICE, WITHOUT THE PRIOR WRITTEN AUTHORIZATION OF HARSCO.

CHANGE #		REVISION	DR	DATE
EC501060	A	NEW RELEASE	CJW	05/11
EC501420	B	UPDATE AS BUILT	CJW	06/11

DRAWING TITLE/DESCRIPTION:
ELECTRICAL SCHEMATIC
Can:04 Digital Module

MACHINE TYPE-MODEL:
MARK IV

E3 PROJECT FILE NAME:
MARK IV HD

SHEET NUMBER: J04
NUMBER OF JUPITER SHEETS: 19
TOTAL NUMBER OF SHEETS: 28

DRAWN BY: CJW
REL. DATE: 05/11
SIZE: D
SCALE:

HARSCO RAIL

E3 DRAWING
5007950

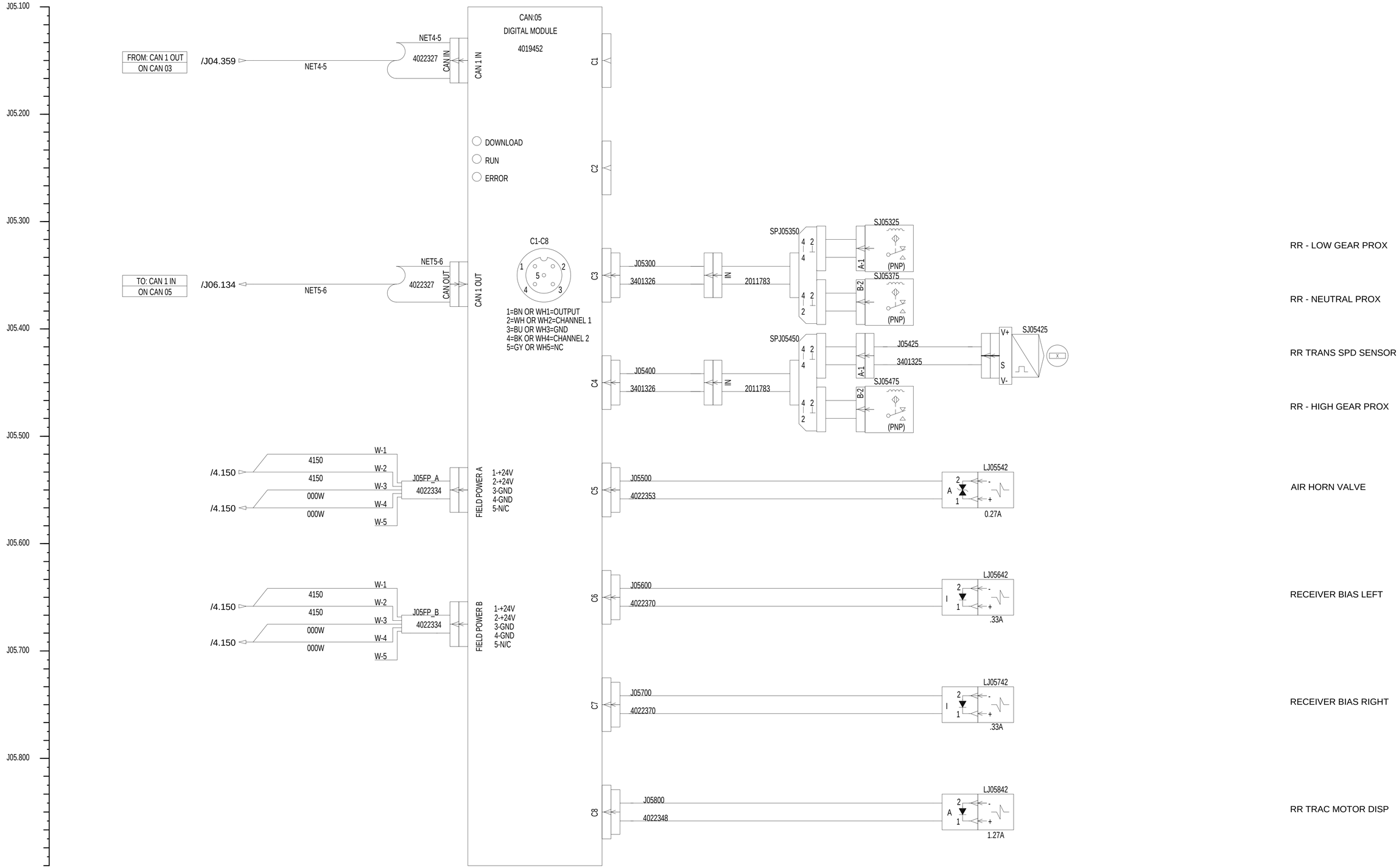

CONFIDENTIAL

©COPYRIGHT 2011 HARSCO. THIS DRAWING OR DOCUMENT IS THE PROPERTY OF HARSCO AND EMBODIES CONFIDENTIAL INFORMATION, TRADE SECRET INFORMATION, AND/OR KNOW-HOW THAT IS THE PROPERTY OF HARSCO. BY ACCEPTING THIS DRAWING OR DOCUMENT, THE RECIPIENT AGREES (1) NOT TO PROVIDE, OR OTHERWISE MAKE AVAILABLE, THE DRAWING OR DOCUMENT, OR ANY INFORMATION OR KNOW-HOW EMBODIED THEREIN, TO ANY THIRD PARTY AND (2) NOT TO REPRODUCE OR USE THE DRAWING OR DOCUMENT TO MANUFACTURE ANY APPARATUS OR DEVICE, WITHOUT THE PRIOR WRITTEN AUTHORIZATION OF HARSCO.

CHANGE #		REVISION	DR	DATE
EC501060	A	NEW RELEASE	CJW	05/11
EC501420	B	UPDATE AS BUILT	CJW	06/11

DRAWING TITLE/DESCRIPTION:
ELECTRICAL SCHEMATIC
Can:05 Digital Module

MACHINE TYPE-MODEL:
MARK IV

E3 PROJECT FILE NAME:
MARK IV HD

SHEET NUMBER: J05
NUMBER OF JUPITER SHEETS: 19
TOTAL NUMBER OF SHEETS: 28

DRAWN BY: CJW
REL. DATE: 05/11
SIZE: D
SCALE:

HARSCO RAIL

E3 DRAWING
5007950

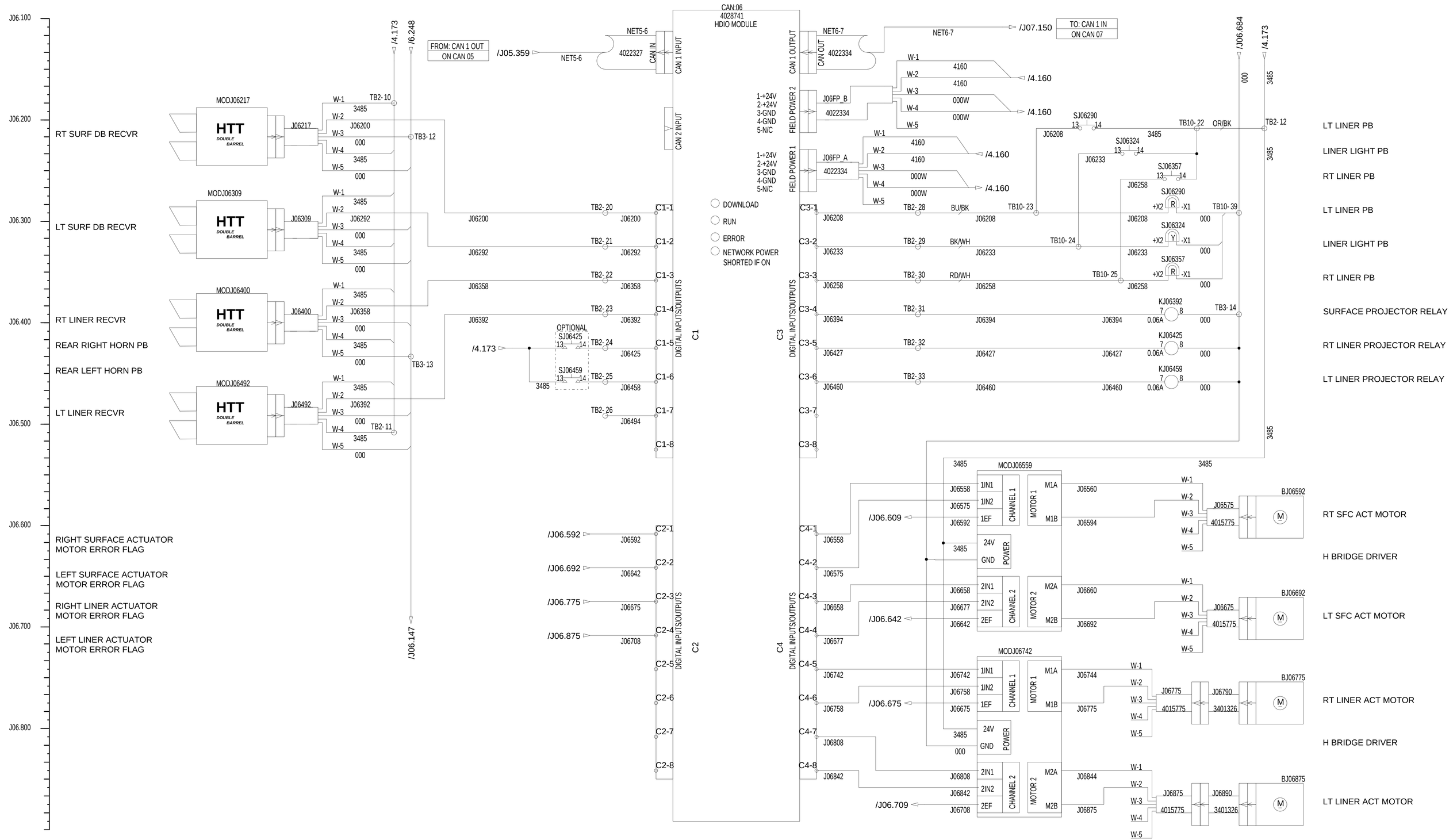

CONFIDENTIAL

©COPYRIGHT 2011 HARSCO. THIS DRAWING OR DOCUMENT IS THE PROPERTY OF HARSCO AND EMBODIES CONFIDENTIAL INFORMATION, TRADE SECRET INFORMATION, AND/OR KNOW-HOW THAT IS THE PROPERTY OF HARSCO. BY ACCEPTING THIS DRAWING OR DOCUMENT, THE RECIPIENT AGREES (1) NOT TO PROVIDE, OR OTHERWISE MAKE AVAILABLE, THE DRAWING OR DOCUMENT, OR ANY INFORMATION OR KNOW-HOW EMBODIED THEREIN, TO ANY THIRD PARTY AND (2) NOT TO REPRODUCE OR USE THE DRAWING OR DOCUMENT TO MANUFACTURE ANY APPARATUS OR DEVICE, WITHOUT THE PRIOR WRITTEN AUTHORIZATION OF HARSCO.

CHANGE #		REVISION	DR	DATE
EC501060	A	NEW RELEASE	CJW	05/11
EC501420	B	UPDATE AS BUILT	CJW	06/11

DRAWING TITLE/DESCRIPTION:
ELECTRICAL SCHEMATIC
Can:06 HDIO Module

MACHINE TYPE-MODEL:
MARK IV

E3 PROJECT FILE NAME:
MARK IV HD

SHEET NUMBER: J06
NUMBER OF JUPITER SHEETS: 19
TOTAL NUMBER OF SHEETS: 28

DRAWN BY: CJW
REL. DATE: 05/11
SIZE: D
SCALE:

HARSCO RAIL

E3 DRAWING
5007950

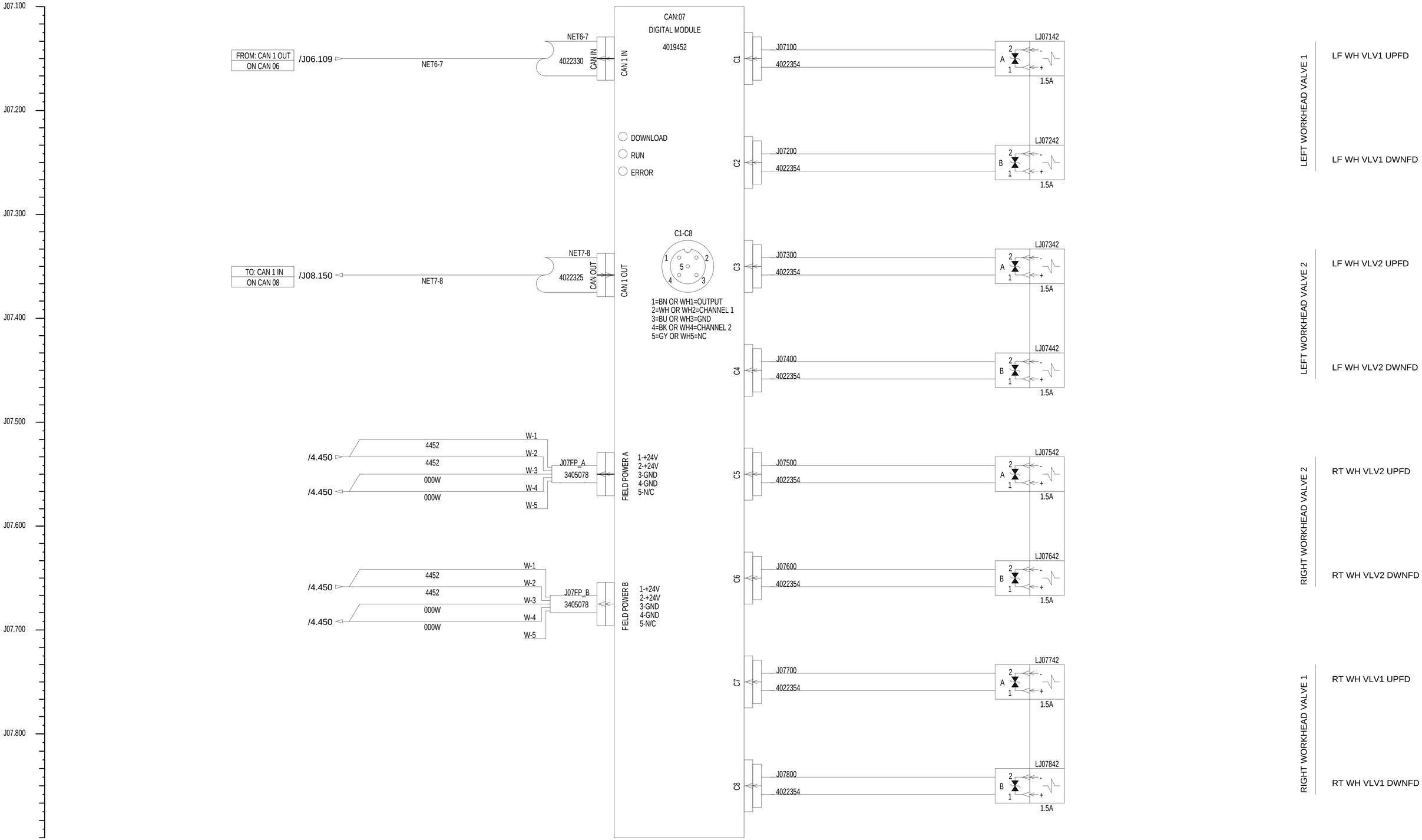

CONFIDENTIAL

©COPYRIGHT 2011 HARSCO. THIS DRAWING OR DOCUMENT IS THE PROPERTY OF HARSCO AND EMBODIES CONFIDENTIAL INFORMATION, TRADE SECRET INFORMATION, AND/OR KNOW-HOW THAT IS THE PROPERTY OF HARSCO. BY ACCEPTING THIS DRAWING OR DOCUMENT, THE RECIPIENT AGREES (1) NOT TO PROVIDE, OR OTHERWISE MAKE AVAILABLE, THE DRAWING OR DOCUMENT, OR ANY INFORMATION OR KNOW-HOW EMBODIED THEREIN, TO ANY THIRD PARTY AND (2) NOT TO REPRODUCE OR USE THE DRAWING OR DOCUMENT TO MANUFACTURE ANY APPARATUS OR DEVICE, WITHOUT THE PRIOR WRITTEN AUTHORIZATION OF HARSCO.

CHANGE #		REVISION	DR	DATE
EC501060	A	NEW RELEASE	CJW	05/11
EC501420	B	UPDATE AS BUILT	CJW	06/11

DRAWING TITLE/DESCRIPTION:
ELECTRICAL SCHEMATIC
Can:07 Digital Module

MACHINE TYPE-MODEL:
MARK IV

E3 PROJECT FILE NAME:
MARK IV HD

SHEET NUMBER: J07
NUMBER OF JUPITER SHEETS: 19
TOTAL NUMBER OF SHEETS: 28

DRAWN BY: CJW
REL. DATE: 05/11
SIZE: D
SCALE:

HARSCO RAIL

E3 DRAWING
5007950

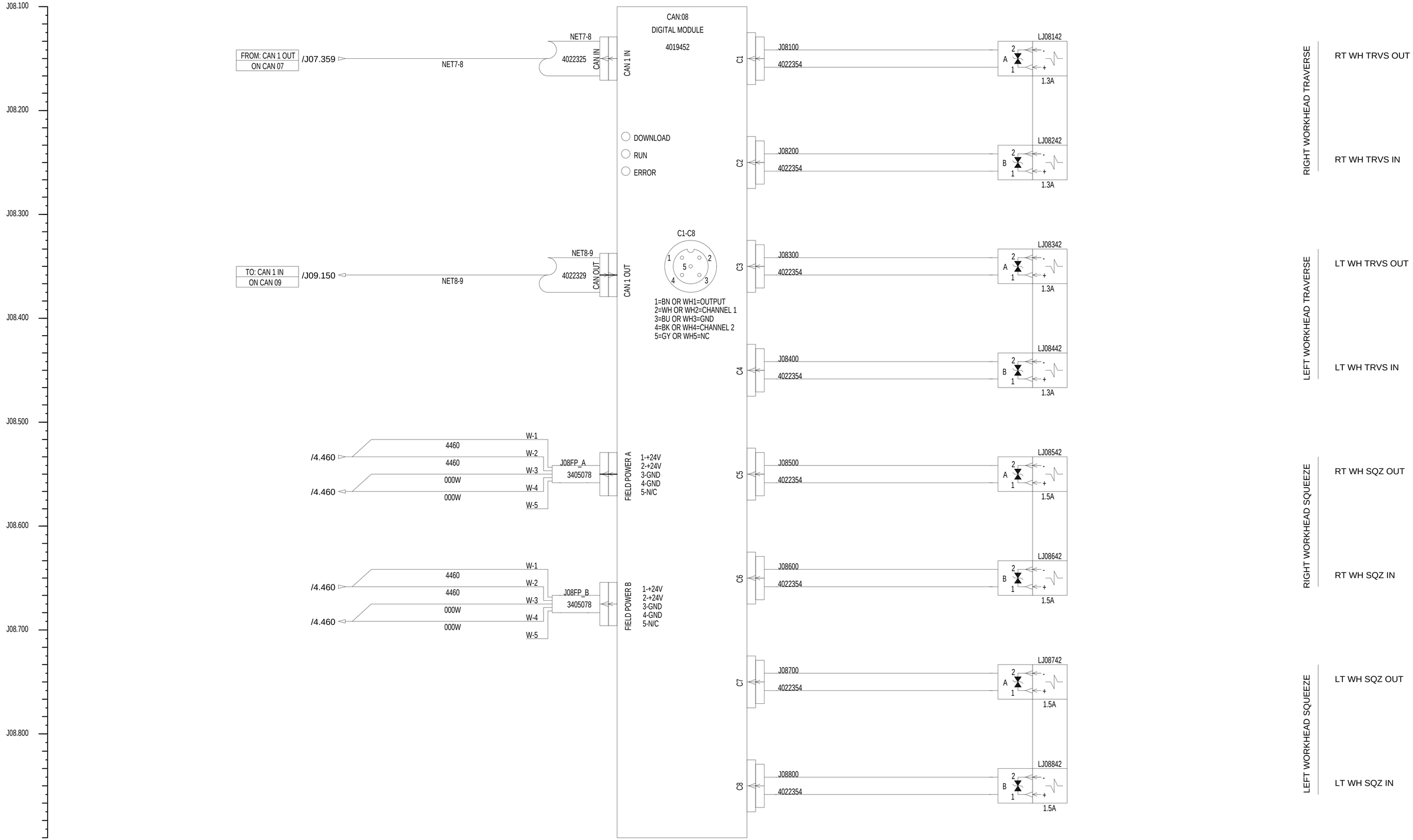

CONFIDENTIAL

©COPYRIGHT 2011 HARSCO. THIS DRAWING OR DOCUMENT IS THE PROPERTY OF HARSCO AND EMBODIES CONFIDENTIAL INFORMATION, TRADE SECRET INFORMATION, AND/OR KNOW-HOW THAT IS THE PROPERTY OF HARSCO. BY ACCEPTING THIS DRAWING OR DOCUMENT, THE RECIPIENT AGREES (1) NOT TO PROVIDE, OR OTHERWISE MAKE AVAILABLE, THE DRAWING OR DOCUMENT, OR ANY INFORMATION OR KNOW-HOW EMBODIED THEREIN, TO ANY THIRD PARTY AND (2) NOT TO REPRODUCE OR USE THE DRAWING OR DOCUMENT TO MANUFACTURE ANY APPARATUS OR DEVICE, WITHOUT THE PRIOR WRITTEN AUTHORIZATION OF HARSCO.

CHANGE #		REVISION	DR	DATE
EC501060	A	NEW RELEASE	CJW	05/11
EC501420	B	UPDATE AS BUILT	CJW	06/11

DRAWING TITLE/DESCRIPTION:
ELECTRICAL SCHEMATIC
Can:08 Digital Module

MACHINE TYPE-MODEL:
MARK IV

E3 PROJECT FILE NAME:
MARK IV HD

SHEET NUMBER	J08
NUMBER OF JUPITER SHEETS	19
TOTAL NUMBER OF SHEETS	28
DRAWN BY:	CJW
REL. DATE:	05/11
SIZE:	D
SCALE:	

HARSCO RAIL

E3 DRAWING

5007950

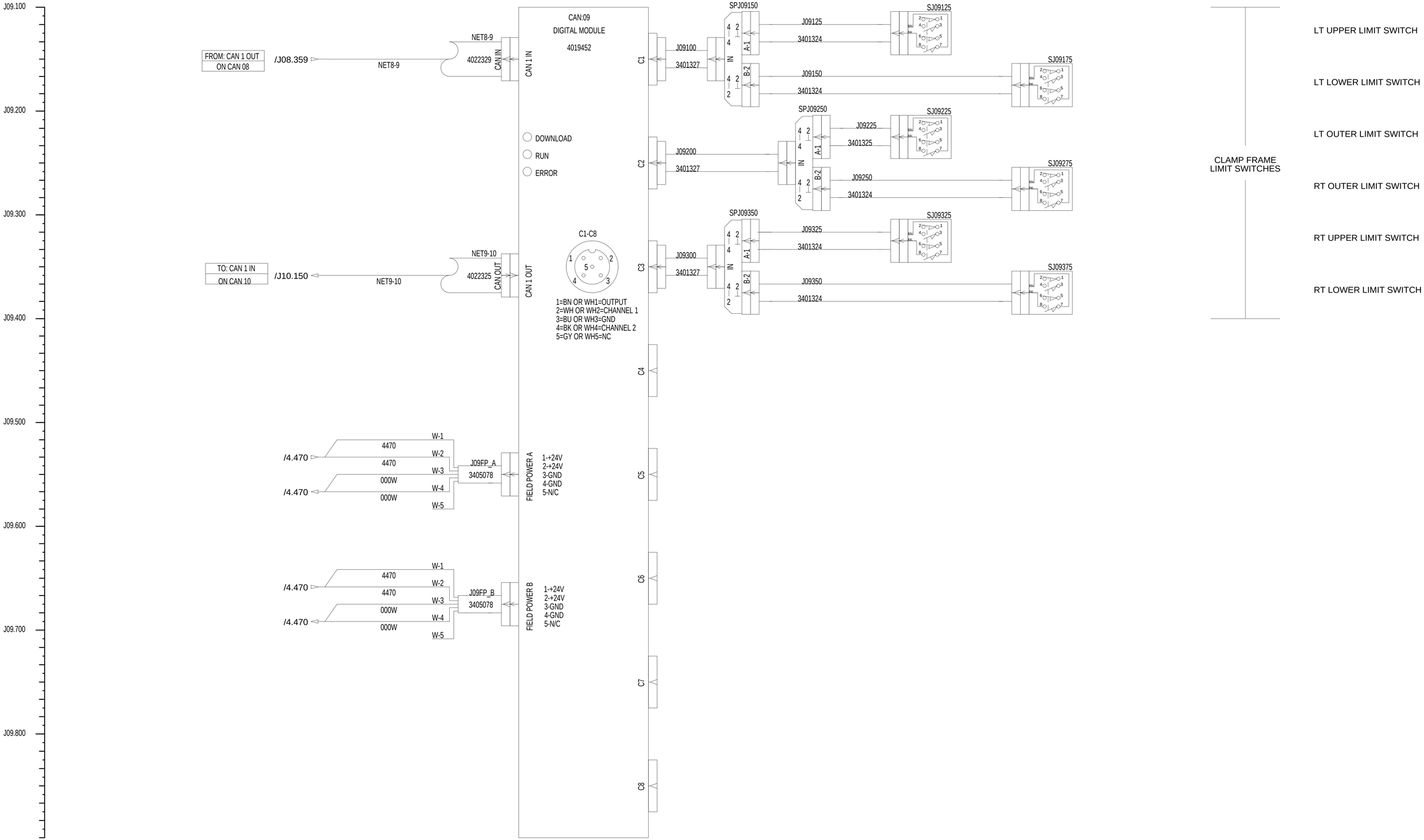

CONFIDENTIAL

©COPYRIGHT 2011 HARSCO. THIS DRAWING OR DOCUMENT IS THE PROPERTY OF HARSCO AND EMBODIES CONFIDENTIAL INFORMATION, TRADE SECRET INFORMATION, AND/OR KNOW-HOW THAT IS THE PROPERTY OF HARSCO. BY ACCEPTING THIS DRAWING OR DOCUMENT, THE RECIPIENT AGREES (1) NOT TO PROVIDE, OR OTHERWISE MAKE AVAILABLE, THE DRAWING OR DOCUMENT, OR ANY INFORMATION OR KNOW-HOW EMBODIED THEREIN, TO ANY THIRD PARTY AND (2) NOT TO REPRODUCE OR USE THE DRAWING OR DOCUMENT TO MANUFACTURE ANY APPARATUS OR DEVICE, WITHOUT THE PRIOR WRITTEN AUTHORIZATION OF HARSCO.

CHANGE #		REVISION	DR	DATE
EC501060	A	NEW RELEASE	CJW	05/11
EC501420	B	UPDATE AS BUILT	CJW	06/11

DRAWING TITLE/DESCRIPTION:
ELECTRICAL SCHEMATIC
Can:09 Digital Module

MACHINE TYPE-MODEL:
MARK IV

E3 PROJECT FILE NAME:
MARK IV HD

SHEET NUMBER: J09
NUMBER OF JUPITER SHEETS: 19
TOTAL NUMBER OF SHEETS: 28

DRAWN BY: CJW
REL. DATE: 05/11
SIZE: D
SCALE:

HARSCO RAIL

E3 DRAWING
5007950

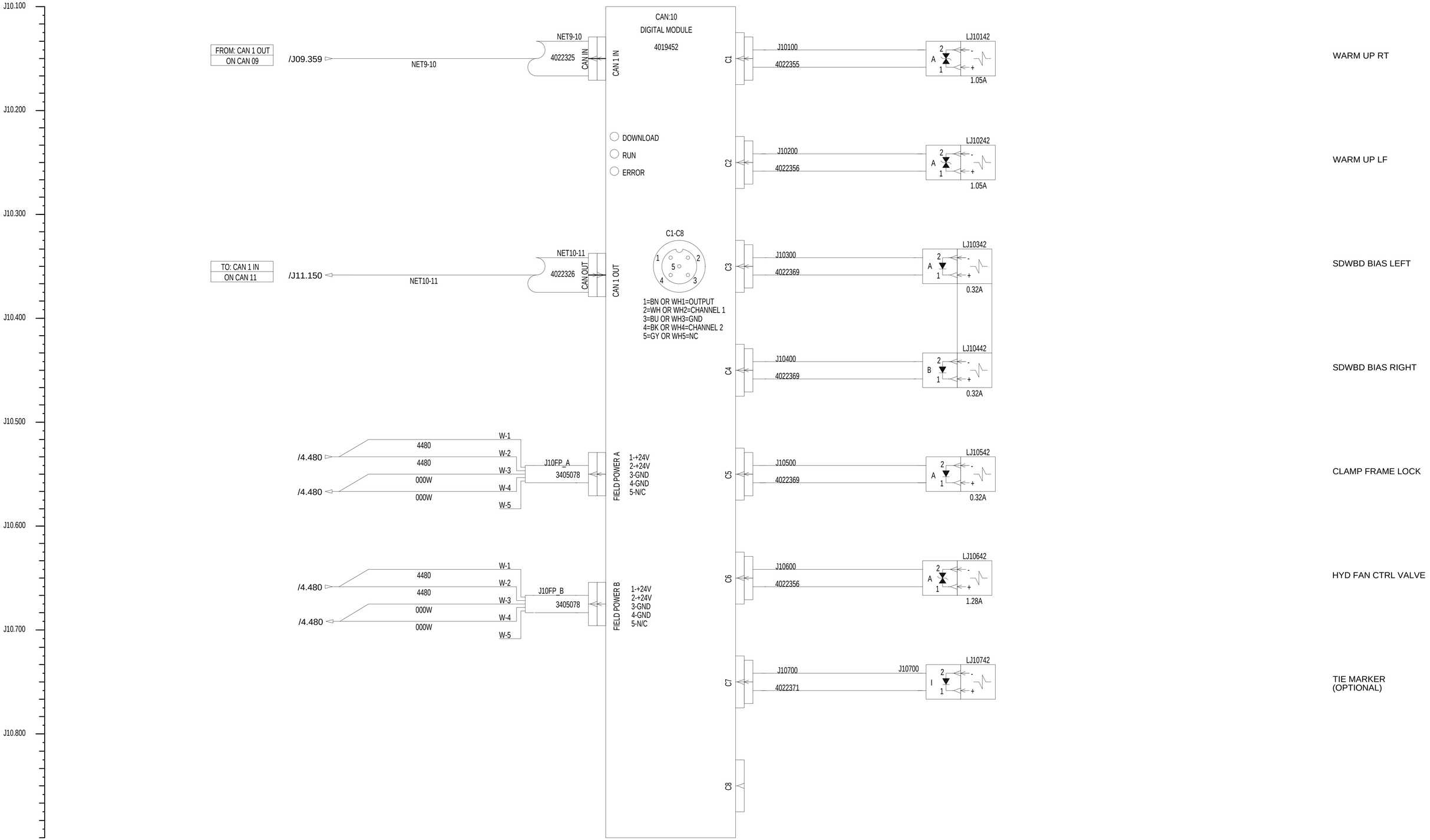

CONFIDENTIAL

©COPYRIGHT 2011 HARSCO. THIS DRAWING OR DOCUMENT IS THE PROPERTY OF HARSCO AND EMBODIES CONFIDENTIAL INFORMATION, TRADE SECRET INFORMATION, AND/OR KNOW-HOW THAT IS THE PROPERTY OF HARSCO. BY ACCEPTING THIS DRAWING OR DOCUMENT, THE RECIPIENT AGREES (1) NOT TO PROVIDE, OR OTHERWISE MAKE AVAILABLE, THE DRAWING OR DOCUMENT, OR ANY INFORMATION OR KNOW-HOW EMBODIED THEREIN, TO ANY THIRD PARTY AND (2) NOT TO REPRODUCE OR USE THE DRAWING OR DOCUMENT TO MANUFACTURE ANY APPARATUS OR DEVICE, WITHOUT THE PRIOR WRITTEN AUTHORIZATION OF HARSCO.

CHANGE #		REVISION	DR	DATE
EC501060	A	NEW RELEASE	CJW	05/11
EC501420	B	UPDATE AS BUILT	CJW	06/11

DRAWING TITLE/DESCRIPTION:
ELECTRICAL SCHEMATIC
Can:10 Digital Module

MACHINE TYPE-MODEL:
MARK IV

E3 PROJECT FILE NAME:
MARK IV HD

SHEET NUMBER: J10
NUMBER OF JUPITER SHEETS: 19
TOTAL NUMBER OF SHEETS: 28

DRAWN BY: CJW
REL. DATE: 05/11
SIZE: D
SCALE:

HARSCO RAIL

E3 DRAWING
5007950

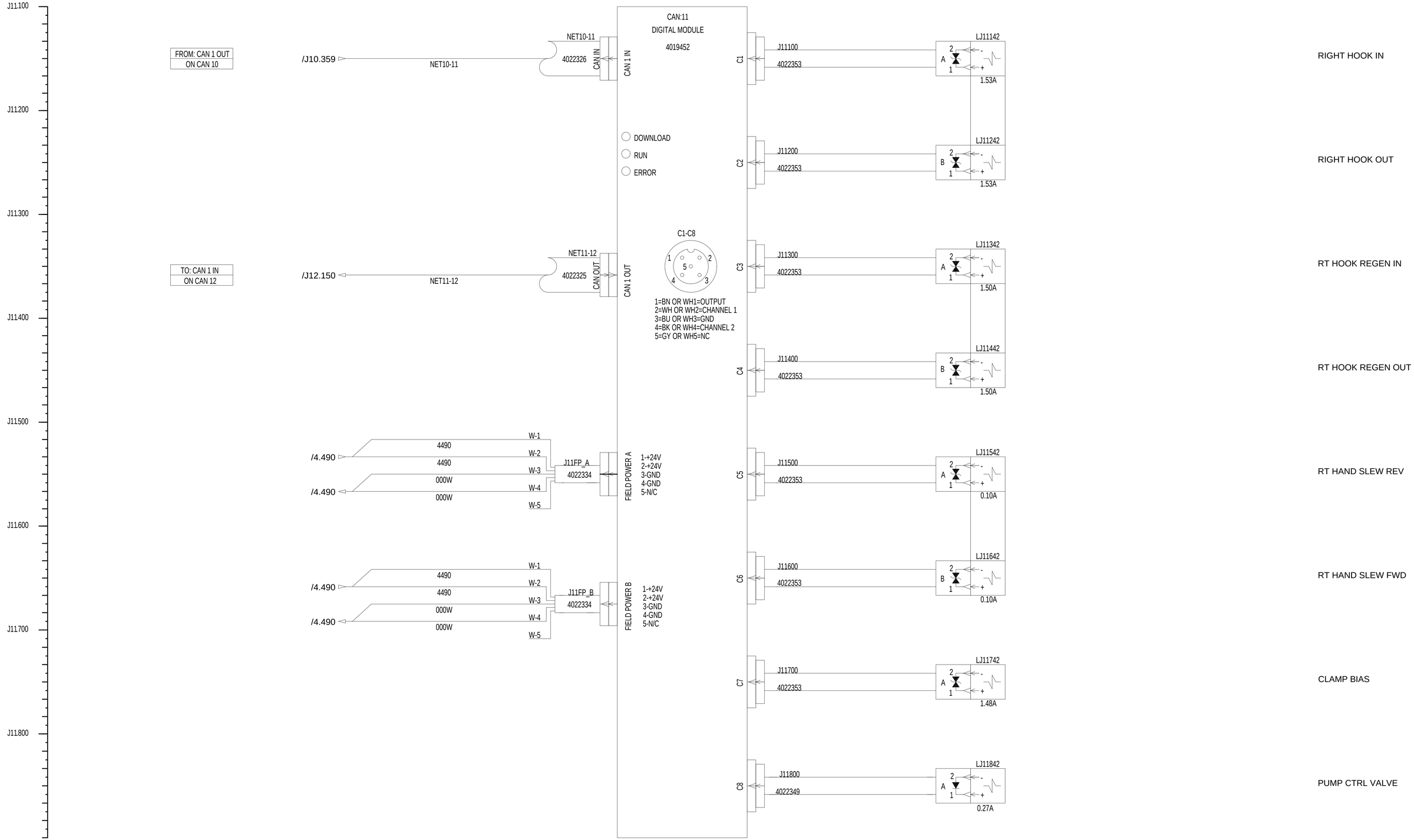

CONFIDENTIAL

©COPYRIGHT 2011 HARSCO. THIS DRAWING OR DOCUMENT IS THE PROPERTY OF HARSCO AND EMBODIES CONFIDENTIAL INFORMATION, TRADE SECRET INFORMATION, AND/OR KNOW-HOW THAT IS THE PROPERTY OF HARSCO. BY ACCEPTING THIS DRAWING OR DOCUMENT, THE RECIPIENT AGREES (1) NOT TO PROVIDE, OR OTHERWISE MAKE AVAILABLE, THE DRAWING OR DOCUMENT, OR ANY INFORMATION OR KNOW-HOW EMBODIED THEREIN, TO ANY THIRD PARTY AND (2) NOT TO REPRODUCE OR USE THE DRAWING OR DOCUMENT TO MANUFACTURE ANY APPARATUS OR DEVICE, WITHOUT THE PRIOR WRITTEN AUTHORIZATION OF HARSCO.

CHANGE #		REVISION	DR	DATE
EC501060	A	NEW RELEASE	CJW	05/11
EC501420	B	UPDATE AS BUILT	CJW	06/11

DRAWING TITLE/DESCRIPTION:
ELECTRICAL SCHEMATIC
Can:11 Digital Module

MACHINE TYPE-MODEL:
MARK IV

E3 PROJECT FILE NAME:
MARK IV HD

SHEET NUMBER: J11
NUMBER OF JUPITER SHEETS: 19
TOTAL NUMBER OF SHEETS: 28

DRAWN BY: CJW
REL. DATE: 05/11
SIZE: D
SCALE:

HARSCO RAIL

E3 DRAWING
5007950

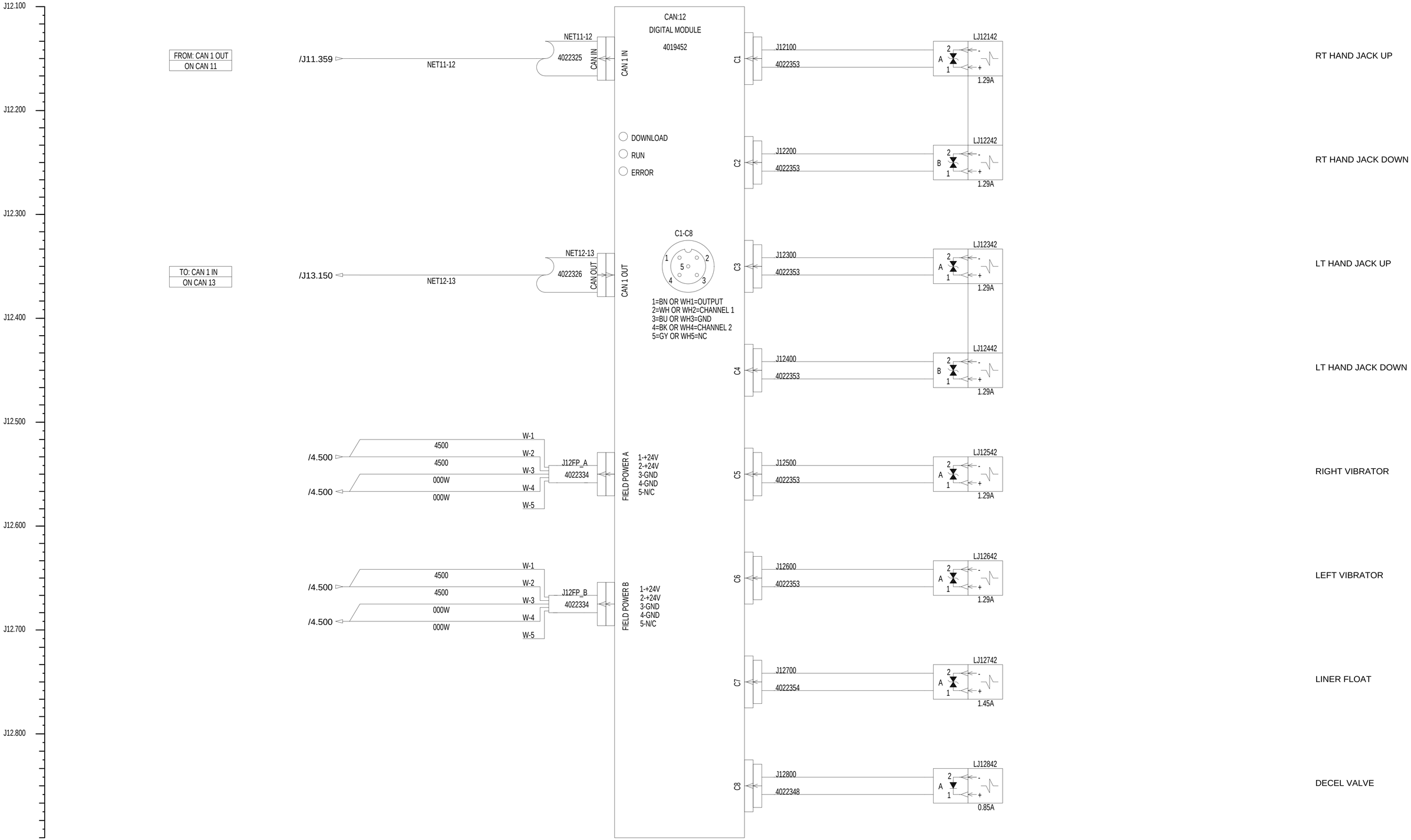

CONFIDENTIAL

©COPYRIGHT 2011 HARSCO. THIS DRAWING OR DOCUMENT IS THE PROPERTY OF HARSCO AND EMBODIES CONFIDENTIAL INFORMATION, TRADE SECRET INFORMATION, AND/OR KNOW-HOW THAT IS THE PROPERTY OF HARSCO. BY ACCEPTING THIS DRAWING OR DOCUMENT, THE RECIPIENT AGREES (1) NOT TO PROVIDE, OR OTHERWISE MAKE AVAILABLE, THE DRAWING OR DOCUMENT, OR ANY INFORMATION OR KNOW-HOW EMBODIED THEREIN, TO ANY THIRD PARTY AND (2) NOT TO REPRODUCE OR USE THE DRAWING OR DOCUMENT TO MANUFACTURE ANY APPARATUS OR DEVICE, WITHOUT THE PRIOR WRITTEN AUTHORIZATION OF HARSCO.

CHANGE #		REVISION	DR	DATE
EC501060	A	NEW RELEASE	CJW	05/11
EC501420	B	UPDATE AS BUILT	CJW	06/11

DRAWING TITLE/DESCRIPTION:
ELECTRICAL SCHEMATIC
Can:12 Digital Module

MACHINE TYPE-MODEL:
MARK IV

E3 PROJECT FILE NAME:
MARK IV HD

SHEET NUMBER: J12
NUMBER OF JUPITER SHEETS: 19
TOTAL NUMBER OF SHEETS: 28

DRAWN BY: CJW
REL. DATE: 05/11
SIZE: D
SCALE:

HARSCO RAIL

E3 DRAWING
5007950

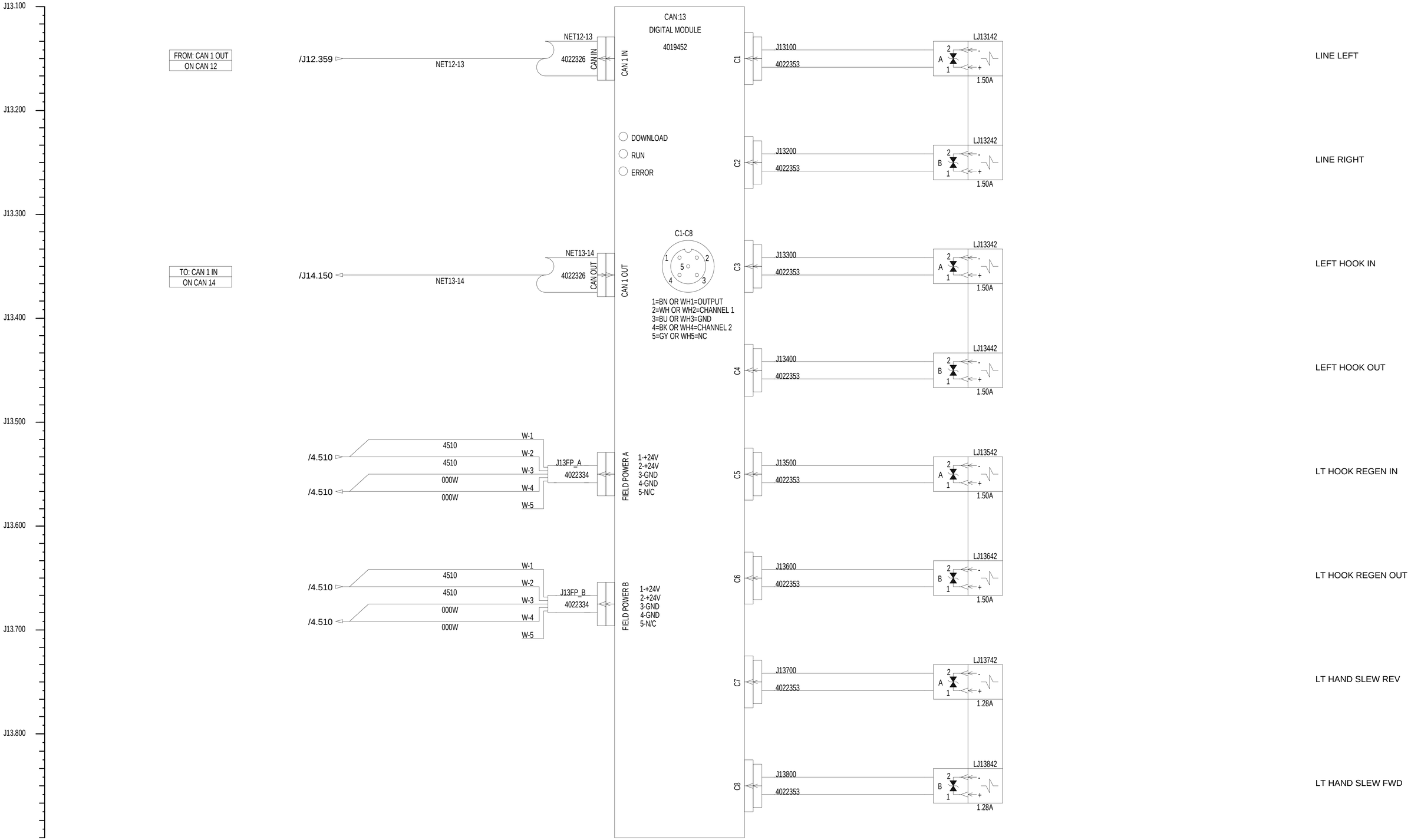

CONFIDENTIAL

©COPYRIGHT 2011 HARSCO. THIS DRAWING OR DOCUMENT IS THE PROPERTY OF HARSCO AND EMBODIES CONFIDENTIAL INFORMATION, TRADE SECRET INFORMATION, AND/OR KNOW-HOW THAT IS THE PROPERTY OF HARSCO. BY ACCEPTING THIS DRAWING OR DOCUMENT, THE RECIPIENT AGREES (1) NOT TO PROVIDE, OR OTHERWISE MAKE AVAILABLE, THE DRAWING OR DOCUMENT, OR ANY INFORMATION OR KNOW-HOW EMBODIED THEREIN, TO ANY THIRD PARTY AND (2) NOT TO REPRODUCE OR USE THE DRAWING OR DOCUMENT TO MANUFACTURE ANY APPARATUS OR DEVICE, WITHOUT THE PRIOR WRITTEN AUTHORIZATION OF HARSCO.

CHANGE #		REVISION	DR	DATE
EC501060	A	NEW RELEASE	CJW	05/11
EC501420	B	UPDATE AS BUILT	CJW	06/11

DRAWING TITLE/DESCRIPTION:
ELECTRICAL SCHEMATIC
Can:13 Digital Module

MACHINE TYPE-MODEL:
MARK IV

E3 PROJECT FILE NAME:
MARK IV HD

SHEET NUMBER: J13
NUMBER OF JUPITER SHEETS: 19
TOTAL NUMBER OF SHEETS: 28

DRAWN BY: CJW
REL. DATE: 05/11
SIZE: D
SCALE:

HARSCO RAIL

E3 DRAWING
5007950

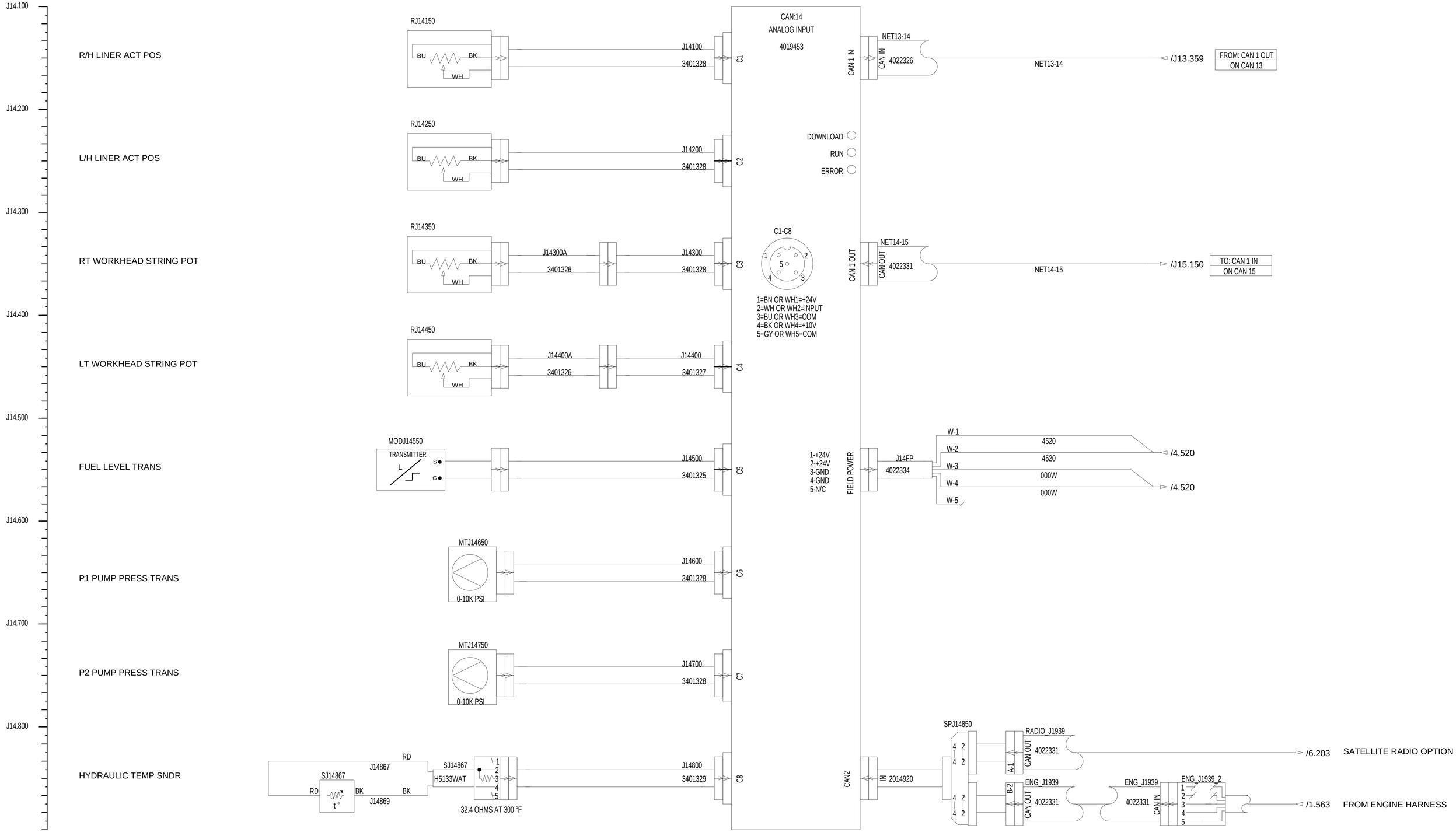

CONFIDENTIAL

©COPYRIGHT 2011 HARSCO. THIS DRAWING OR DOCUMENT IS THE PROPERTY OF HARSCO AND EMBODIES CONFIDENTIAL INFORMATION, TRADE SECRET INFORMATION, AND/OR KNOW-HOW THAT IS THE PROPERTY OF HARSCO. BY ACCEPTING THIS DRAWING OR DOCUMENT, THE RECIPIENT AGREES (1) NOT TO PROVIDE, OR OTHERWISE MAKE AVAILABLE, THE DRAWING OR DOCUMENT, OR ANY INFORMATION OR KNOW-HOW EMBODIED THEREIN, TO ANY THIRD PARTY AND (2) NOT TO REPRODUCE OR USE THE DRAWING OR DOCUMENT TO MANUFACTURE ANY APPARATUS OR DEVICE, WITHOUT THE PRIOR WRITTEN AUTHORIZATION OF HARSCO.

CHANGE #		REVISION	DR	DATE
EC501060	A	NEW RELEASE	CJW	05/11
EC501420	B	UPDATE AS BUILT	CJW	06/11

DRAWING TITLE/DESCRIPTION:
ELECTRICAL SCHEMATIC
Can:14 Analog Module

MACHINE TYPE-MODEL:
MARK IV

E3 PROJECT FILE NAME:
MARK IV HD

SHEET NUMBER: J14
NUMBER OF JUPITER SHEETS: 19
TOTAL NUMBER OF SHEETS: 28

DRAWN BY: CJW
REL. DATE: 05/11
SIZE: D
SCALE:

HARSCO RAIL

E3 DRAWING
5007950

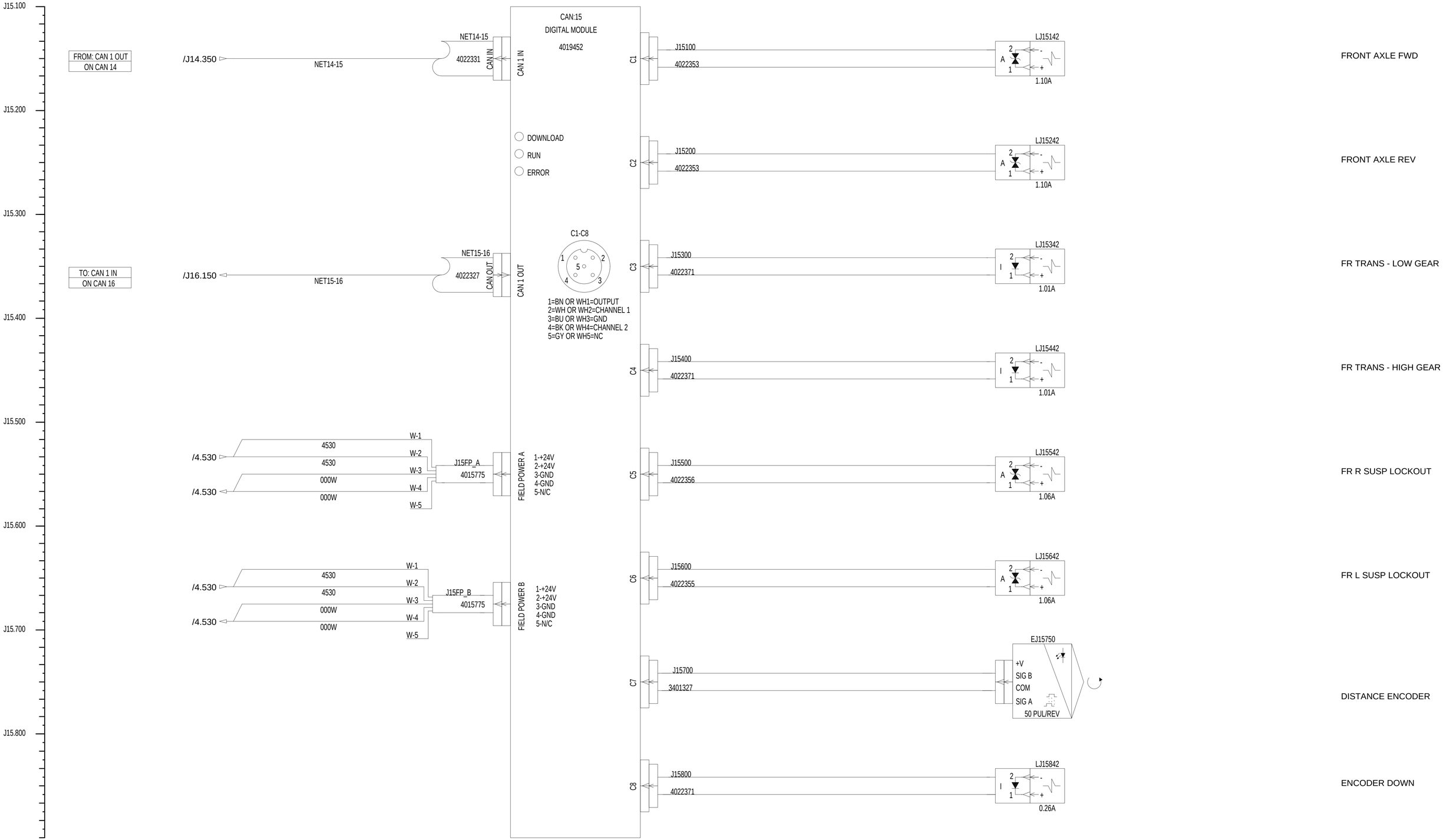

CONFIDENTIAL

©COPYRIGHT 2011 HARSCO. THIS DRAWING OR DOCUMENT IS THE PROPERTY OF HARSCO AND EMBODIES CONFIDENTIAL INFORMATION, TRADE SECRET INFORMATION, AND/OR KNOW-HOW THAT IS THE PROPERTY OF HARSCO. BY ACCEPTING THIS DRAWING OR DOCUMENT, THE RECIPIENT AGREES (1) NOT TO PROVIDE, OR OTHERWISE MAKE AVAILABLE, THE DRAWING OR DOCUMENT, OR ANY INFORMATION OR KNOW-HOW EMBODIED THEREIN, TO ANY THIRD PARTY AND (2) NOT TO REPRODUCE OR USE THE DRAWING OR DOCUMENT TO MANUFACTURE ANY APPARATUS OR DEVICE, WITHOUT THE PRIOR WRITTEN AUTHORIZATION OF HARSCO.

CHANGE #		REVISION	DR	DATE
EC501060	A	NEW RELEASE	CJW	05/11
EC501420	B	UPDATE AS BUILT	CJW	06/11

DRAWING TITLE/DESCRIPTION:
ELECTRICAL SCHEMATIC
Can:15 Digital Module

MACHINE TYPE-MODEL:
MARK IV

E3 PROJECT FILE NAME:
MARK IV HD

SHEET NUMBER: J15
NUMBER OF JUPITER SHEETS: 19
TOTAL NUMBER OF SHEETS: 28

DRAWN BY: CJW
REL. DATE: 05/11
SIZE: D
SCALE:

HARSCO RAIL

E3 DRAWING
5007950

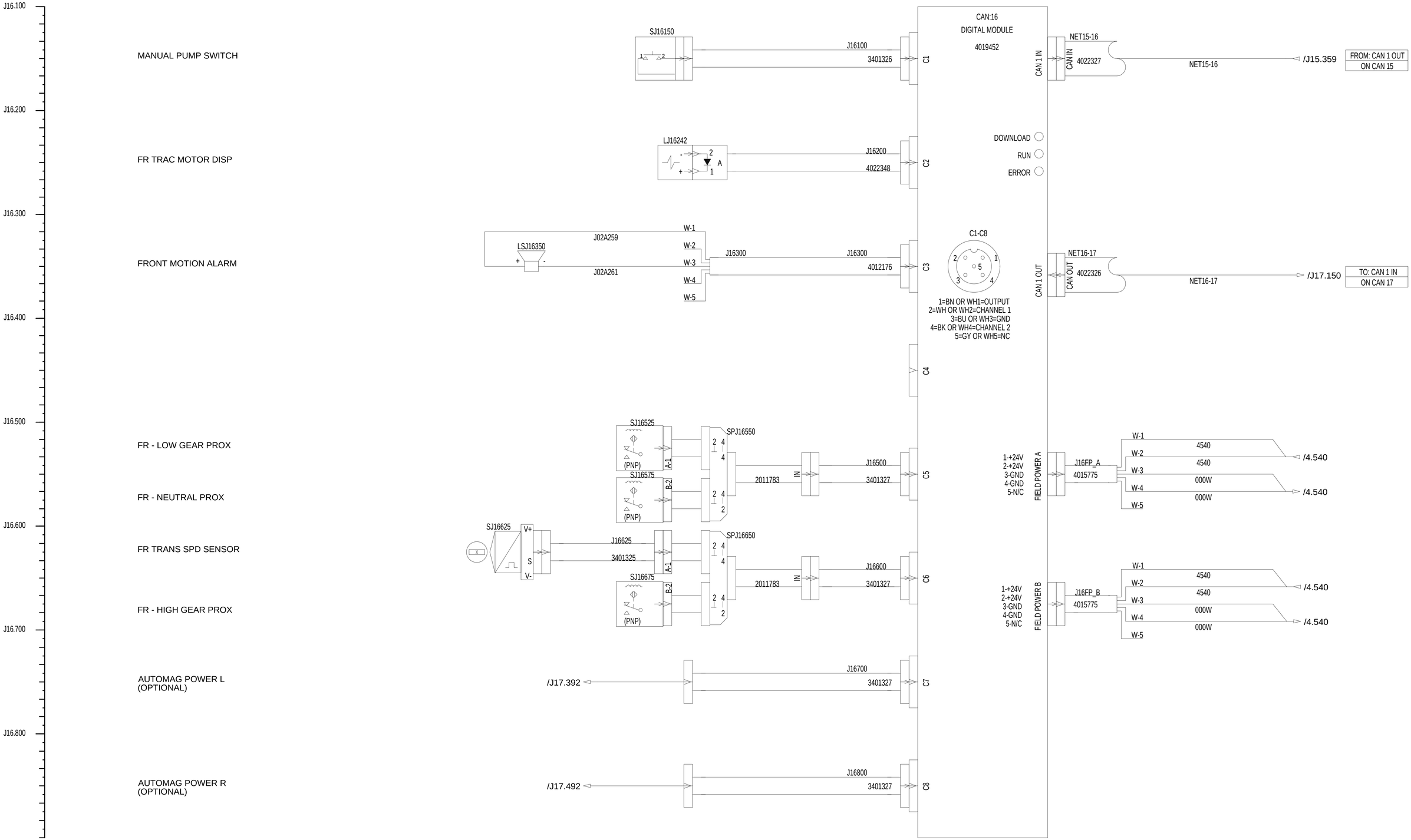

CONFIDENTIAL

©COPYRIGHT 2011 HARSCO. THIS DRAWING OR DOCUMENT IS THE PROPERTY OF HARSCO AND EMBODIES CONFIDENTIAL INFORMATION, TRADE SECRET INFORMATION, AND/OR KNOW-HOW THAT IS THE PROPERTY OF HARSCO. BY ACCEPTING THIS DRAWING OR DOCUMENT, THE RECIPIENT AGREES (1) NOT TO PROVIDE, OR OTHERWISE MAKE AVAILABLE, THE DRAWING OR DOCUMENT, OR ANY INFORMATION OR KNOW-HOW EMBODIED THEREIN, TO ANY THIRD PARTY AND (2) NOT TO REPRODUCE OR USE THE DRAWING OR DOCUMENT TO MANUFACTURE ANY APPARATUS OR DEVICE, WITHOUT THE PRIOR WRITTEN AUTHORIZATION OF HARSCO.

CHANGE #		REVISION	DR	DATE
EC501060	A	NEW RELEASE	CJW	05/11
EC501420	B	UPDATE AS BUILT	CJW	06/11

DRAWING TITLE/DESCRIPTION:
ELECTRICAL SCHEMATIC
Can:16 Digital Module

MACHINE TYPE-MODEL:
MARK IV

E3 PROJECT FILE NAME:
MARK IV HD

SHEET NUMBER: J16
NUMBER OF JUPITER SHEETS: 19
TOTAL NUMBER OF SHEETS: 28

DRAWN BY: CJW
REL. DATE: 05/11
SIZE: D
SCALE:

HARSCO RAIL

E3 DRAWING
5007950

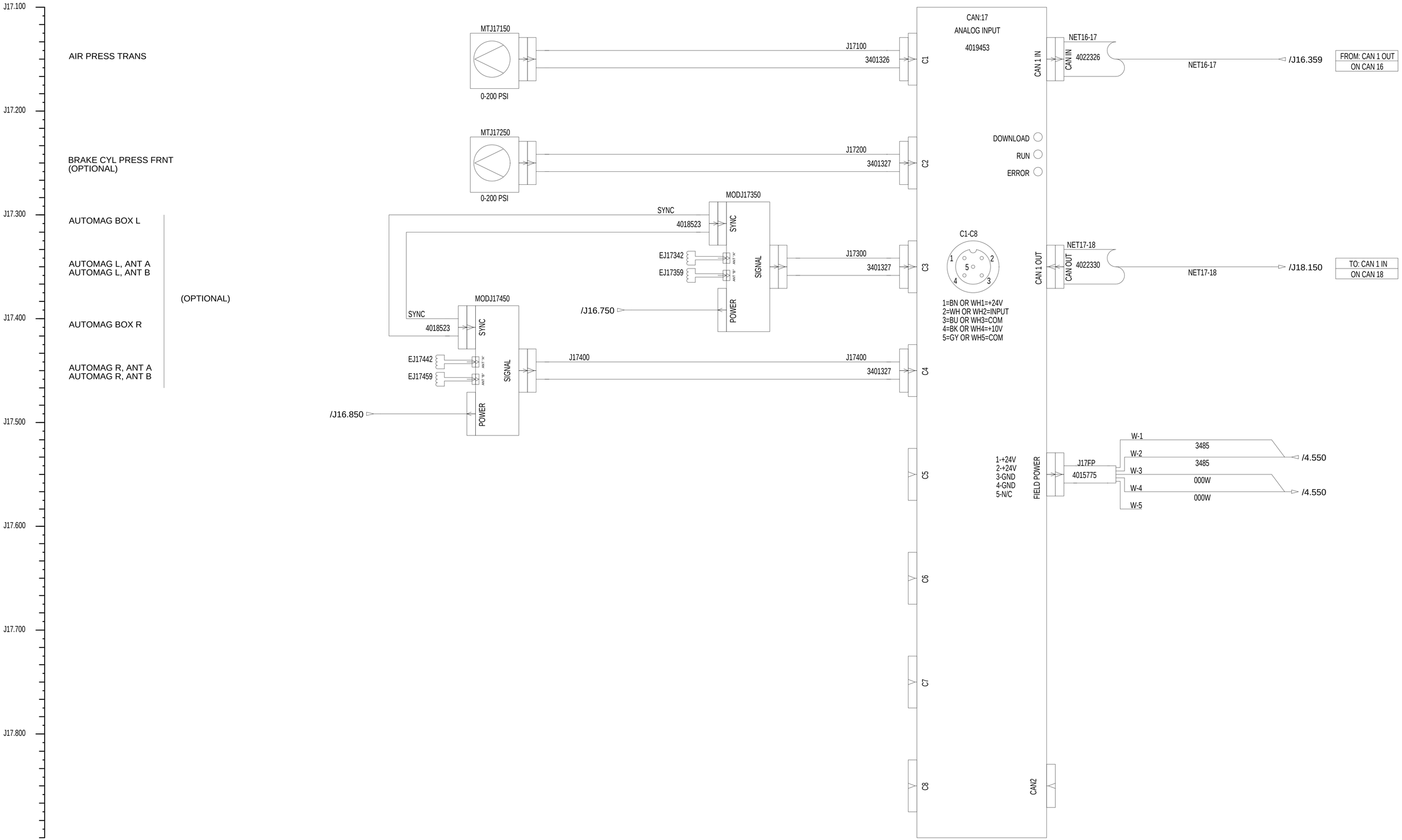

CONFIDENTIAL

©COPYRIGHT 2011 HARSCO. THIS DRAWING OR DOCUMENT IS THE PROPERTY OF HARSCO AND EMBODIES CONFIDENTIAL INFORMATION, TRADE SECRET INFORMATION, AND/OR KNOW-HOW THAT IS THE PROPERTY OF HARSCO. BY ACCEPTING THIS DRAWING OR DOCUMENT, THE RECIPIENT AGREES (1) NOT TO PROVIDE, OR OTHERWISE MAKE AVAILABLE, THE DRAWING OR DOCUMENT, OR ANY INFORMATION OR KNOW-HOW EMBODIED THEREIN, TO ANY THIRD PARTY AND (2) NOT TO REPRODUCE OR USE THE DRAWING OR DOCUMENT TO MANUFACTURE ANY APPARATUS OR DEVICE, WITHOUT THE PRIOR WRITTEN AUTHORIZATION OF HARSCO.

CHANGE #		REVISION	DR	DATE
EC501060	A	NEW RELEASE	CJW	05/11
EC501420	B	UPDATE AS BUILT	CJW	06/11

DRAWING TITLE/DESCRIPTION:
ELECTRICAL SCHEMATIC
Can:17 Analog Module

MACHINE TYPE-MODEL:
MARK IV

E3 PROJECT FILE NAME:
MARK IV HD

SHEET NUMBER: J17
NUMBER OF JUPITER SHEETS: 19
TOTAL NUMBER OF SHEETS: 28

DRAWN BY: CJW
REL. DATE: 05/11
SIZE: D
SCALE:

HARSCO RAIL

E3 DRAWING
5007950

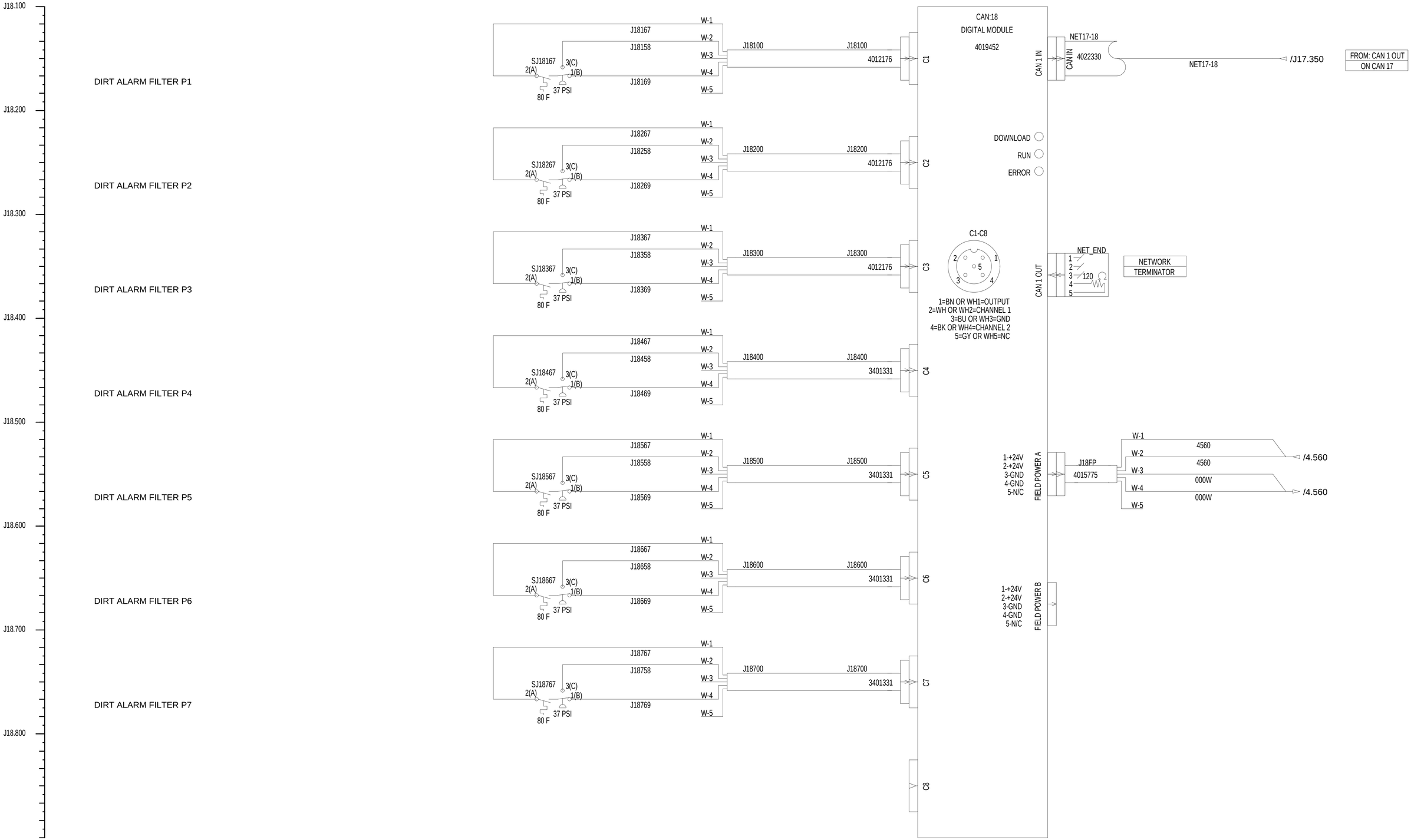

CONFIDENTIAL

©COPYRIGHT 2011 HARSCO. THIS DRAWING OR DOCUMENT IS THE PROPERTY OF HARSCO AND EMBODIES CONFIDENTIAL INFORMATION, TRADE SECRET INFORMATION, AND/OR KNOW-HOW THAT IS THE PROPERTY OF HARSCO. BY ACCEPTING THIS DRAWING OR DOCUMENT, THE RECIPIENT AGREES (1) NOT TO PROVIDE, OR OTHERWISE MAKE AVAILABLE, THE DRAWING OR DOCUMENT, OR ANY INFORMATION OR KNOW-HOW EMBODIED THEREIN, TO ANY THIRD PARTY AND (2) NOT TO REPRODUCE OR USE THE DRAWING OR DOCUMENT TO MANUFACTURE ANY APPARATUS OR DEVICE, WITHOUT THE PRIOR WRITTEN AUTHORIZATION OF HARSCO.

CHANGE #		REVISION	DR	DATE
EC501060	A	NEW RELEASE	CJW	05/11
EC501420	B	UPDATE AS BUILT	CJW	06/11

DRAWING TITLE/DESCRIPTION:
ELECTRICAL SCHEMATIC
Can:18 Digital Module

MACHINE TYPE-MODEL:
MARK IV

E3 PROJECT FILE NAME:
MARK IV HD

SHEET NUMBER: J18
NUMBER OF JUPITER SHEETS: 19
TOTAL NUMBER OF SHEETS: 28

DRAWN BY: CJW
REL. DATE: 05/11
SIZE: D
SCALE:

HARSCO RAIL

E3 DRAWING
5007950

CIRCUIT BREAKERS / FUSES

DEVICE	SHT LOC	AMP	DESCRIPTION	LOCATION	PART NUMBER
CB1120	/1.120	125 AMP	PDB POWER	PDB	C9678Y24
CB6160	/6.160	5 AMP	SATELLITE RADIO	OPT SAT RADIO	C9678Y08
CB1130	/1.120	125 AMP	MCB POWER	PDB	C9678Y24
CB1135	/1.131	30 AMP	3PIN OEM CONN	I/C	4024977
CB1245	/1.248	5 AMP	ENGINE PROTECTION LTS	MCB	C9678Y08
CB1260	/1.261	15 AMP	IGNITION / JUPITER SWITCH PWR	MCB	C9678Y10
CB1295	/1.298	5 AMP	IGNITION INPUT POWER	MCB	C9678Y08
CB1450	/1.450	125 AMP	GRID HEATER POWER	PDB	C9678Y24
CB1460	/1.460	1 AMP	ENGINE 9-PIN POWER	PDB	C9678Y31
CB2120	/2.120	30 AMP	A/C POWER	MCB	C9678Y12
CB2170	/2.170	20 AMP	WORK LIGHT SWITCHES	MCB	C9678Y11
CB2450	/2.450	20 AMP	CAB FANS/SEAT POWER	MCB	C9678Y11
CB2600	/2.600	20 AMP	WORK/BOX LIGHTS	PDB	C9678Y11
CB3110	/3.110	20 AMP	BRAKE/DRIVE LIGHTS PWR	MCB	C9678Y11
CB4110	/4.110	10 AMP	J42 POWER	MCB	C9678Y09
CB4120	/4.120	8 AMP	CAN:02 POWER	MCB	C9678Y23
CB4130	/4.130	8 AMP	CAN:03 POWER	MCB	C9678Y23
CB4140	/4.140	15 AMP	CAN:04 POWER	MCB	C9678Y10
CB4150	/4.150	15 AMP	CAN:05 POWER	MCB	C9678Y10
CB4160	/4.160	15 AMP	CAN:06 POWER	MCB	C9678Y10
CB4170	/4.170	20 AMP	ACTUATOR/RECEIVR PWR	MCB	C9678Y11
CB4190	/4.190	20 AMP	AC PWR SUPPLY	MCB	C9678Y11
CB4220	/4.220	10 AMP	LINER PROJ PWR	MCB	C9678Y09
CB4240	/4.241	10 AMP	LASER POWER	MCB	C9678Y09
CB4260	/4.261	10 AMP	SURFACE PROJ PWR	MCB	C9678Y09
CB4450	/4.450	15 AMP	CAN:07 POWER	PDB	C9678Y10
CB4460	/4.460	15 AMP	CAN:08 POWER	PDB	C9678Y10
CB4470	/4.470	15 AMP	CAN:09 POWER	PDB	C9678Y10
CB4480	/4.480	15 AMP	CAN:10 POWER	PDB	C9678Y10
CB4490	/4.490	15 AMP	CAN:11 POWER	PDB	C9678Y10
CB4500	/4.500	15 AMP	CAN:12 POWER	PDB	C9678Y10
CB4510	/4.510	15 AMP	CAN:13 POWER	PDB	C9678Y10
CB4520	/4.520	8 AMP	CAN:14 POWER	PDB	C9678Y23
CB4530	/4.530	15 AMP	CAN:15 POWER	PDB	C9678Y10
CB4540	/4.540	15 AMP	CAN:16 POWER	PDB	C9678Y10
CB4550	/4.550	8 AMP	CAN:17 POWER	PDB	C9678Y23
CB4560	/4.560	8 AMP	CAN:18 POWER	OPT FILTER KITS	C9678Y23
CB5120	/5.120	10 AMP	FUEL HEATER	OPT FUEL HTR	C9678Y09
CB5140	/5.140	20 AMP	AUX WORK LIGHTS	OPT AUX WK LTS	C9678Y11
CB5210	/5.210	30 AMP	PERIMETER LIGHTS	OPT PERIM LTS	C9678Y12
CB5450	/5.450	15 AMP	LOWER WIPERS	OPT LWR WIPERS	C9678Y10
CB5580	/5.580	20 AMP	DC PWR SUPPLY	OPT RADIO	C9678Y11
CB6120	/6.120	10 AMP	HYD TOP OFF	OPT HYD TOP-OFF	C9678Y09
F1200	/1.193	10 AMP	ALTERNATOR FUSE	I/C	F023546

RELAYS

DEVICE	SHEET LOCATION			DESCRIPTION	LOCATION	PART NUMBER
	COIL	CONTACTS				
K1150	/1.150			EMERGENCY PUMP	FRAME	0-3316003-0-04
K1233	/1.233	/2.113		CAB POWER RELAY	MCB	172164
K1265	/1.265	/1.175		STR SLAVE RLY 1	ENGINE	172164
K1275	/1.275	/1.235		STR SLAVE RLY 2	MCB	D0650Y07
K1295	/1.295	/4.450		COMPUTER ON 1	PDB	172164
K1304	/1.304	/4.450		COMPUTER ON 2	PDB	172164
K1320	/1.320	/4.110		COMPUTER ON 3	MCB	172164
K1328	/1.328	/4.110		COMPUTER ON 4	MCB	172164
K1505	/1.507	/1.450		GRID HEATER RELAY	ENGINE	172164
K2180	/2.180	/2.600		WORK LIGHT RELAY	PDB	172164
K2210	/2.210	/5.140		AUX WORK LIGHT RELAY	OPT AUX WK LTS	172164
K2280	/2.280	/3.110	/3.138	FRONT MAIN TRVL RLY	MCB	D0650Y07
K2300	/2.300	/3.228	/3.198	REAR MAIN TRAVEL RELAY	MCB	D0650Y07
K2320	/2.320	/5.210		PERIMETER LIGHT RELAY	OPT PERIM LTS	172164
KJ06392	/J06.392		/4.260	SURFACE PROJECTOR RELAY	MCB	D0650Y07
KJ06425	/J06.425	/4.230	/4.251	RT LINER PROJECTOR RELAY	MCB	D0650Y07
KJ06459	/J06.459	/4.221	/4.241	LT LINER PROJECTOR RELAY	MCB	D0650Y07

DIODES

DEVICE	SHT LOC	DESCRIPTION	LOCATION	PART NUMBER
CR1240	/1.240	CAB POWER RELAY	MCB	F040174
CR1265	/1.259	STARTER SLAVE RELAY	ENGINE	F040174
CR1305	/1.312	COMPUTER ON 1 & 2	PDB	F040174
CR1330	/1.335	COMPUTER ON 3 & 4	MCB	F040174
CR2188	/2.188	WORK LIGHT RELAY	PDB	F040174
CR2218	/2.218	AUX WORK LIGHT RELAY	OPT AUX WK LTS	F040174
CR2328	/2.328	PERIMETER LIGHTS	OPT PERIM LTS	F040174

TRANSDUCERS

DEVICE	SHT LOC	DESCRIPTION	LOCATION	PART NUMBER
MTJ03250	/J03.250	WH SQZ PRESS TRANS	WORKHEAD	4008374
MTJ03450	/J03.450	LT CLAMP PRESS TRANS	WORKHEAD	4008374
MTJ03550	/J03.550	RT CLAMP PRESS TRANS	WORKHEAD	4008374
MTJ03650	/J03.650	INCLINOMETER	JUP INSTALL	0-3150005-0-01
MTJ03750	/J03.750	BRAKE CYL PRESS REAR	OPT BRAKE PRESS	3400894
MTJ14650	/J14.650	P1 PUMP PRESS TRANS	HYD SYSTEM	4008374
MTJ14750	/J14.750	P2 PUMP PRESS TRANS	HYD SYSTEM	4008374
MTJ17250	/J17.250	BRAKE CYL PRESS FRNT	OPT BRAKE PRESS	3400894

SPLITTERS

DEVICE	SHT LOC	DESCRIPTION	LOCATION	PART NUMBER
SPJ09150	/J09.150	LT CLAMP LIMIT SW	COMBO_CLAMP	414260
SPJ09250	/J09.250	CLAMP OUTER LIMIT SW	COMBO_CLAMP	414260
SPJ09350	/J09.350	RT CLAMP LIMIT SW	COMBO_CLAMP	414260
SPJ05350	/J05.350	RR GEARBOX SWITCHES	JUP INSTALL	2011783
SPJ05450	/J05.450	RR GEARBOX SWITCHES	JUP INSTALL	2011783
SPJ14850	/J14.850	ENG_J1939 CAN	OPT SAT RADIO	2014920
SPJ16550	/J16.550	FR GEARBOX SWITCHES	JUP INSTALL	2011783
SPJ16650	/J16.650	FR GEARBOX SWITCHES	JUP INSTALL	2011783

ANTENNAS

DEVICE	SHT LOC	DESCRIPTION	LOCATION	PART NUMBER
EJ17342	/J17.342	AUTOMAG L, ANT A	OPT TIE FINDER	4012592
EJ17359	/J17.359	AUTOMAG L, ANT B	OPT TIE FINDER	4012592
EJ17442	/J17.442	AUTOMAG R, ANT A	OPT TIE FINDER	4012592
EJ17459	/J17.459	AUTOMAG R, ANT B	OPT TIE FINDER	4012592

LIGHTS AND INDICATORS

DEVICE	SHT LOC	DESCRIPTION	LOCATION	PART NUMBER	BULB PART NO.
DS1600	/1.600	ENGINE STOP LIGHT	ECP	EAL/R24STOP	ASSEMBLY
DS1610	/1.610	ENGINE WARNING LIGHT	ECP	EAL/Y24	ASSEMBLY
DS1620	/1.620	ENGINE WAIT TO START LIGHT	ECP	EAL/Y24WARNING	ASSEMBLY
LT2490	/2.491	CAB DOME LIGHT	CAB	0-2301261-0-01	0-3101012-0-00
LT2503	/2.503	CAB BEACON LIGHT	OPT STOBE LIGHT	200232	
LT2590	/2.590	WORK LIGHT	I/C	174288	174290
LT2600	/2.600	WORK LIGHT	I/C	174288	174290
LT2610	/2.610	WORK LIGHT	I/C	174288	174290
LT2620	/2.620	WORK LIGHT	I/C	174288	174290
LT3110	/3.110	LEFT FRONT DRIVE LIGHT	I/C	174287	174289
LT3120	/3.120	LEFT FRONT SPOT LIGHT	I/C	A2197Y09	A2197Y10
LT3140	/3.141	RIGHT FRONT DRIVE LIGHT	I/C	174287	174289
LT3150	/3.151	RIGHT FRONT SPOT LIGHT	I/C	A2197Y09	A2197Y10
LT3165	/3.165	REAR TAIL LIGHT	CAB	4014750	
LT3183	/3.183	REAR TAIL LIGHT	CAB	4014750	
LT3200	/3.200	LEFT REAR DRIVE LIGHT	CAB	174287	174289
LT3210	/3.210	LEFT REAR SPOT LIGHT	CAB	A2197Y09	A2197Y10
LT3220	/3.220	RIGHT REAR DRIVE LIGHT	CAB	174287	174289
LT3230	/3.230	RIGHT REAR SPOT LIGHT	CAB	A2197Y09	A2197Y10
LT3250	/3.250	LEFT FRONT TAIL LIGHT	I/C	4014750	
LT3270	/3.270	RIGHT FRONT TAIL LIGHT	I/C	4014750	
LT5140	/5.140	AUX WORK LIGHT	OPT AUX WK LTS	A2197Y06	
LT5150	/5.150	AUX WORK LIGHT	OPT AUX WK LTS	A2197Y06	
LT5160	/5.160	AUX WORK LIGHT	OPT AUX WK LTS	A2197Y06	
LT5170	/5.170	AUX WORK LIGHT	OPT AUX WK LTS	A2197Y06	
LT5180	/5.180	AUX WORK LIGHT	OPT AUX WK LTS	A2197Y06	
LT5190	/5.190	AUX WORK LIGHT	OPT AUX WK LTS	A2197Y06	
LT5210	/5.210	LT FR PERIMETER LIGHT	OPT PERIM LTS	A2197Y06	
LT5220	/5.220	LT MID PERIMETER LIGHT	OPT PERIM LTS	A2197Y06	
LT5230	/5.230	LT WH PERIMETER LIGHT	OPT PERIM LTS	A2197Y06	
LT5240	/5.240	RT FR PERIMETER LIGHT	OPT PERIM LTS	A2197Y06	
LT5250	/5.250	RT MID PERIMETER LIGHT	OPT PERIM LTS	A2197Y06	
LT5260	/5.260	RT WH PERIMETER LIGHT	OPT PERIM LTS	A2197Y06	
LT5270	/5.270	LT CAB PERIMTER LIGHT	OPT PERIM LTS	A2197Y06	
LT5280	/5.280	RT CAB PERIMTER LT	OPT PERIM LTS	A2197Y06	
LT5300	/5.300	MCB CABINET LIGHT	OPT CABINET LT	F040972	F041170
LT5313	/5.313	PDB CABINET LIGHT	OPT CABINET LT	F040972	F041170

CONFIDENTIAL

©COPYRIGHT 2011 HARSCO. THIS DRAWING OR DOCUMENT IS THE PROPERTY OF HARSCO AND EMBODIES CONFIDENTIAL INFORMATION, TRADE SECRET INFORMATION, AND/OR KNOW-HOW THAT IS THE PROPERTY OF HARSCO. BY ACCEPTING THIS DRAWING OR DOCUMENT, THE RECIPIENT AGREES (1) NOT TO PROVIDE, OR OTHERWISE MAKE AVAILABLE, THE DRAWING OR DOCUMENT, OR ANY INFORMATION OR KNOW-HOW EMBODIED THEREIN, TO ANY THIRD PARTY AND (2) NOT TO REPRODUCE OR USE THE DRAWING OR DOCUMENT TO MANUFACTURE ANY APPARATUS OR DEVICE, WITHOUT THE PRIOR WRITTEN AUTHORIZATION OF HARSCO.

CHANGE #		REVISION	DR	DATE
EC501060	A	NEW RELEASE	CJW	05/11
EC501420	B	UPDATE AS BUILT	CJW	06/11

DRAWING TITLE/DESCRIPTION: ELECTRICAL SCHEMATIC Reference

MACHINE TYPE-MODEL: MARK IV

E3 PROJECT FILE NAME: MARK IV HD

SHEET NUMBER: X1

NUMBER OF JUPITER SHEETS: 19

TOTAL NUMBER OF SHEETS: 28

DRAWN BY: CJW

REL. DATE: 05/11

SIZE: D

SCALE:

HARSCO RAIL

E3 DRAWING

5007950

SOLENOIDS

DEVICE	SHT LOC	DESCRIPTION	LOCATION	PART NUMBER
L1210	/1.211	SPRING BRAKE BLOWDOWN	FRAME	0-3413003-0-15
L1220	/1.218	E-STOP BRAKE VALVE	FRAME	5006344
L2142	/2.142	A/C RELIEF VALVE	A/C	0-3334011-0-03
L2150	/2.150	VENT SOLENOID	A/C	A0729Y06
L2630	/2.628	AIR BLOWDOWN VALVE	OPT AIR BLOWDOWN	5006344
LJ04142	/J04.142	REAR AXLE FWD	REAR_AXL	SOL-COIL
LJ04242	/J04.242	REAR AXLE REV	REAR_AXL	SOL-COIL
LJ04342	/J04.342	RR TRANS - LOW GEAR	REAR_AXL	SOL-COIL
LJ04442	/J04.442	RR TRANS - HIGH GEAR	REAR_AXL	SOL-COIL
LJ04542	/J04.542	RR L SUSP LOCKOUT		SOL-COIL
LJ04642	/J04.642	RR R SUSP LOCKOUT		SOL-COIL
LJ04742	/J04.742	INDEX BRAKE	FRONT	SOL-COIL
LJ04842	/J04.842	WH LKUP RLS	FRONT	SOL-COIL
LJ05542	/J05.542	AIR HORN VALVE	AIR TANK	SOL-COIL
LJ05642	/J05.642	RECEIVER BIAS LEFT	RCV_BG	SOL-COIL
LJ05742	/J05.742	RECEIVER BIAS RIGHT	RCV_BG	SOL-COIL
LJ05842	/J05.842	RR TRAC MOTOR DISP	REAR TRANS	SOL-COIL
LJ07142	/J07.142	LF WH VLV1 UPFD	WORKHEAD	SOL-COIL
LJ07242	/J07.242	LF WH VLV1 DWNFD	WORKHEAD	SOL-COIL
LJ07342	/J07.342	LF WH VLV2 UPFD	WORKHEAD	SOL-COIL
LJ07442	/J07.442	LF WH VLV2 DWNFD	WORKHEAD	SOL-COIL
LJ07542	/J07.542	RT WH VLV2 UPFD	WORKHEAD	SOL-COIL
LJ07642	/J07.642	RT WH VLV2 DWNFD	WORKHEAD	SOL-COIL
LJ07742	/J07.742	RT WH VLV1 UPFD	WORKHEAD	SOL-COIL
LJ07842	/J07.842	RT WH VLV1 DWNFD	WORKHEAD	SOL-COIL
LJ08142	/J08.142	RT WH TRVS OUT	WORKHEAD	SOL-COIL
LJ08242	/J08.242	RT WH TRVS IN	WORKHEAD	SOL-COIL
LJ08342	/J08.342	LT WH TRVS OUT	WORKHEAD	SOL-COIL
LJ08442	/J08.442	LT WH TRVS IN	WORKHEAD	SOL-COIL
LJ08542	/J08.542	RT WH SQZ OUT	WORKHEAD	SOL-COIL
LJ08642	/J08.642	RT WH SQZ IN	WORKHEAD	SOL-COIL
LJ08742	/J08.742	LT WH SQZ OUT	WORKHEAD	SOL-COIL
LJ08842	/J08.842	LT WH SQZ IN	WORKHEAD	SOL-COIL
LJ10142	/J10.142	WARM UP RT	NEAR FUEL TANK	SOL-COIL
LJ10242	/J10.242	WARM UP LF	NEAR FUEL TANK	SOL-COIL
LJ10342	/J10.342	SDWBD BIAS LEFT	RS_FRAME	SOL-COIL
LJ10442	/J10.442	SDWBD BIAS RIGHT	RS_FRAME	SOL-COIL
LJ10542	/J10.542	CLAMP FRAME LOCK	RS_FRAME	SOL-COIL
LJ10642	/J10.642	HYD FAN CTRL VALVE	HYD TANK	SOL-COIL
LJ10742	/J10.742	TIE MARKER	NEAR FUEL TANK	SOL-COIL
LJ11142	/J11.142	RIGHT HOOK IN	NEAR FUEL TANK	SOL-COIL
LJ11242	/J11.242	RIGHT HOOK OUT	NEAR FUEL TANK	SOL-COIL
LJ11342	/J11.342	RT HOOK REGEN IN	NEAR FUEL TANK	SOL-COIL
LJ11442	/J11.442	RT HOOK REGEN OUT	NEAR FUEL TANK	SOL-COIL
LJ11542	/J11.542	RT HAND SLEW REV	NEAR FUEL TANK	SOL-COIL
LJ11642	/J11.642	RT HAND SLEW FWD	NEAR FUEL TANK	SOL-COIL
LJ11742	/J11.742	CLAMP BIAS	NEAR FUEL TANK	SOL-COIL
LJ11842	/J11.842	PUMP CTRL VALVE	HYD SYSTEM	SOL-COIL
LJ12142	/J12.142	RT HAND JACK UP	NEAR FUEL TANK	SOL-COIL
LJ12242	/J12.242	RT HAND JACK DOWN	NEAR FUEL TANK	SOL-COIL
LJ12342	/J12.342	LT HAND JACK UP	NEAR FUEL TANK	SOL-COIL
LJ12442	/J12.442	LT HAND JACK DOWN	NEAR FUEL TANK	SOL-COIL
LJ12542	/J12.542	RIGHT VIBRATOR	NEAR FUEL TANK	SOL-COIL
LJ12642	/J12.642	LEFT VIBRATOR	NEAR FUEL TANK	SOL-COIL
LJ12742	/J12.742	LINER FLOAT	NEAR FUEL TANK	SOL-COIL
LJ12842	/J12.842	DECEL VALVE	WORKHEAD	SOL-COIL
LJ13142	/J13.142	LINE LEFT	NEAR FUEL TANK	SOL-COIL
LJ13242	/J13.242	LINE RIGHT	NEAR FUEL TANK	SOL-COIL
LJ13342	/J13.342	LEFT HOOK IN	NEAR FUEL TANK	SOL-COIL
LJ13442	/J13.442	LEFT HOOK OUT	NEAR FUEL TANK	SOL-COIL
LJ13542	/J13.542	LT HOOK REGEN IN	NEAR FUEL TANK	SOL-COIL
LJ13642	/J13.642	LT HOOK REGEN OUT	NEAR FUEL TANK	SOL-COIL
LJ13742	/J13.742	LT HAND SLEW REV	NEAR FUEL TANK	SOL-COIL
LJ13842	/J13.842	LT HAND SLEW FWD	NEAR FUEL TANK	SOL-COIL
LJ15142	/J15.142	FRONT AXLE FWD	FRONT AXLE	SOL-COIL
LJ15242	/J15.242	FRONT AXLE REV	FRONT AXLE	SOL-COIL
LJ15342	/J15.342	FR TRANS - LOW GEAR	FRONT AXLE	SOL-COIL
LJ15442	/J15.442	FR TRANS - HIGH GEAR	FRONT AXLE	SOL-COIL
LJ15542	/J15.542	FR R SUSP LOCKOUT	FRONT	SOL-COIL
LJ15642	/J15.642	FR L SUSP LOCKOUT	FRONT	SOL-COIL
LJ15842	/J15.842	ENCODER DOWN	FRONT	SOL-COIL
LJ16242	/J16.242	FR TRAC MOTOR DISP	FRONT TRANS	SOL-COIL

CAN MODULES

DEVICE	SHT LOC	DESCRIPTION	LOCATION	PART NUMBER
J42	/J01.442	JUPITER OSCILLATOR	CAB	4022695
CAN:01	/J01.209	JAMBOX	CAB	4015854
CAN:02	/J02A.100	DIGITAL MODULE	RHC	4019452
CAN:03	/J03.109	ANALOG INPUT MODULE	JUP INSTALL	4019453
CAN:04	/J04.100	DIGITAL MODULE	JUP INSTALL	4019452
CAN:05	/J05.100	DIGITAL MODULE	JUP INSTALL	4019452
CAN:06	/J06.092	HDIO MODULE	MCB	4028741
CAN:07	/J07.100	DIGITAL MODULE	JUP INSTALL	4019452
CAN:08	/J08.100	DIGITAL MODULE	JUP INSTALL	4019452
CAN:09	/J09.100	DIGITAL MODULE	JUP INSTALL	4019452
CAN:10	/J10.100	DIGITAL MODULE	JUP INSTALL	4019452
CAN:11	/J11.100	DIGITAL MODULE	JUP INSTALL	4019452
CAN:12	/J12.100	DIGITAL MODULE	JUP INSTALL	4019452
CAN:13	/J13.100	DIGITAL MODULE	JUP INSTALL	4019452
CAN:14	/J14.109	ANALOG MODULE	JUP INSTALL	4019453
CAN:15	/J15.100	DIGITAL MODULE	JUP INSTALL	4019452
CAN:16	/J16.100	DIGITAL MODULE	JUP INSTALL	4019452
CAN:17	/J17.109	ANALOG MODULE	JUP INSTALL	4019453
CAN:18	/J18.100	DIGITAL MODULE	OPT FILTER KITS	4019452

MISC COMPONENTS

DEVICE	SHT LOC	DESCRIPTION	LOCATION	PART NUMBER
MG1193	/1.193	ALTERNATOR	ENGINE	0-3183005-0-02
AR6160	/6.161	SATELLITE RADIO	OPT SAT RADIO	H6237Y01
B2120	/2.120	AIR CONDITIONER	A/C	D6456X01
B2238	/2.238	FR WIPER MOTOR	CAB	0-3502007-0-02
B2258	/2.258	RR WIPER MOTOR	CAB	0-3502007-0-02
B2450	/2.450	CAB FAN #1	CAB	L425984
B2463	/2.463	CAB FAN #2	CAB	L425984
B2475	/2.475	CAB DOOR FAN	CAB	L425984
M2520	/2.520	SEAT CONTROLS	SEAT	C8681X01
B5468	/5.468	LEFT LOWER WIPER	OPT LWR WIPERS	0-3502007-0-12
B5510	/5.510	RIGHT LOWER WIPER	OPT LWR WIPERS	0-3502007-0-12
B6120	/6.120	HYD TOP OFF PUMP	OPT HYD TOP-OFF	3400138
BJ06592	/J06.592	RT SFC ACT MOTOR	LINER	D4713XAB
BJ06692	/J06.692	LT SFC ACT MOTOR	LINER	D4713XAB
BJ06775	/J06.775	RT LINER ACT MOTOR	LINER	D4713XAB
BJ06875	/J06.875	LT LINER ACT MOTOR	LINER	D4713XAB
BT1110	/1.110	BATTERY #1	I/C	2013244
BT1112	/1.110	BATTERY #2	I/C	2013244
EJ15750	/J15.750	DISTANCE ENCODER	FRONT AXLE	2006977
E15126	/1.460	ENGINE COMMUNICATIONS	ENGINE	4012415
HR2640	/2.641	AIR DRYER	AIR TANK	C9785X15
KEYJ02B725	/J02B.725	RIGHT HAND KEYPAD	RHC	H1826WAB
KEYJ02B809	/J02B.809	LEFT HAND KEYPAD	LHC	H1825WAC
LSJ02A234	/J02A.234	REAR MOTION ALARM	I/C	174532
LSJ02A442	/J02A.442	COMPUTER ALARM	RHC	0-3106007-0-03
LSJ16350	/J16.350	FRONT MOTION ALARM	JUP INSTALL	174532
MODJ02A125	/J02A.125 /J02B.125	CAN:02 EXP BOARD	RHC	4022817
MODJ06217	/J06.217	RT SURF DB RECVR	SURF	4007012
MODJ06309	/J06.309	LT SURF DB RECVR	SURF	4007012
MODJ06400	/J06.400	RT LINER RECVR	LINER	4007012
MODJ06492	/J06.492	LT LINER RECVR	LINER	4007012
MODJ06559	/J06.559	H BRIDGE DRIVER	MCB	H5614Y01
MODJ06742	/J06.742	H BRIDGE DRIVER	MCB	H5614Y01
MODJ14550	/J14.550	FUEL LEVEL TRANS	FUEL TANK	H5133WAK
MODJ17350	/J17.350	AUTOMAG BOX L	OPT TIE FINDER	4016560
MODJ17450	/J17.450	AUTOMAG BOX R	OPT TIE FINDER	4016560
MONJ01209	/J01.209	MONITOR	CAB	4015040
MTJ17150	/J17.151	AIR PRESS TRANS	AIR TANK	3400894
LT3165.P1	/3.165	LEFT REAR TAIL LIGHT	CAB	4014765
LT3183.P1	/3.183	RIGHT REAR TAIL LIGHT	CAB	4014765
LT3250.P1	/3.250	LEFT FRONT TAIL LT	I/C	4014765
LT3270.P1	/3.270	RIGHT FRONT TAIL LIGHT	I/C	4014765
PS5570	/5.570	DC-DC POWER SUPPLY	OPT RADIO	B1507Y02
PS4190	/4.190	DC-AC PWR SUPPLY	CAB	A1787Y24
PSJ03650	/J03.650	INCL PWR SUPPLY	JUP INSTALL	H5133WAV
RJ03150	/J03.150	RT SURF RECVR POS	RCV_BG	Y685628-03A
RJ03350	/J03.350	LT SURF RECVR POS	RCV_BG	Y685628-03A
RJ14150	/J14.150	R/H LINER ACT POS	LINER	Y685628-03A
RJ14250	/J14.250	L/H LINER ACT POS	LINER	Y685628-03A
RJ14350	/J14.350	RT WORKHEAD STRING POT	WORKHEAD	Y685628-03A
RJ14450	/J14.450	LT WORKHEAD STRING POT	WORKHEAD	Y685628-03A
UJ01209	/J01.209	KEYBOARD	CAB	2013432

SWITCHES

DEVICE	SHEET LOCATION				DESCRIPTION	LOCATION	PART NUMBER
S1110	/1.110				BATTERY SWITCH	I/C	F025527
S1165	/1.160				EMERGENCY PUMP PB	I/C	ASSEMBLY
S1330	/1.330	/J02B.209	/1.221		E-STOP	RHC	ASSEMBLY
S1250	/1.260				IGNITION SWITCH	ECP	164824
S1285	/1.287	/1.288	/1.295	/1.265	JUPITER ON SWITCH	ECP	ASSEMBLY
S2169	/2.169	/2.170	/2.180		WORK LIGHT SWITCH	ECP	ASSEMBLY
S2200	/2.200	/2.200	/2.210		AUX WORK LIGHT SWITCH	OPT AUX WK LTS	ASSEMBLY
S2203	/5.625	/5.635	/5.645	/5.655	RIGHT ESTOP PB	OPT E-STOP	ASSEMBLY
S2206	/5.625	/5.635	/5.645	/5.655	LEFT ESTOP PB	OPT E-STOP	ASSEMBLY
S2225	/2.225	/2.228	/2.238		FR WINDOW WIPER	ECP	ASSEMBLY
S2245	/2.245	/2.248	/2.258		RR WINDOW WIPER	ECP	ASSEMBLY
S2270	/2.270	/2.270	/2.280		FR MAIN TRAVEL LIGHTS	ECP	ASSEMBLY
S2290	/2.290	/2.290	/2.300		RR MAIN TRAVEL LIGHTS	ECP	ASSEMBLY
S2310	/2.310	/2.310	/2.320		PERIMETER LIGHTS	OPT PERIM LTS	ASSEMBLY
S2510	/2.525	/2.510	/2.530	/2.515	SEAT CONTROLS	LHC	ASSEMBLY
S3180	/3.180				BRAKE PRESS SWITCH	REAR_FRAME	L425348
S5540	/5.540	/5.540	/5.550		WIRE BRUSH SHUNT	OPT WIRE BR SHUNT	ASSEMBLY
S5449	/5.449	/5.450	/5.460		LT LOWER WINDOW SWITCH	OPT LWR WIPERS	ASSEMBLY
S5494	/5.494	/5.495	/5.505		RT LOWER WINDOW SWITCH	OPT LWR WIPERS	ASSEMBLY
S6120	/6.120				HYD TOP OFF BUTTON	OPT HYD TOP-OFF	ASSEMBLY
SJ02A525	/J02A.576	/J02A.559	/J02A.526	/J02A.542	RIGHT WORKHEAD	RHC	ASSEMBLY
SJ02A600	/J02A.651	/J02A.634	/J02A.601	/J02A.617	RIGHT HOOK JOYSTICK	RHC	ASSEMBLY
SJ02A800	/J02A.800	/J02A.834	/J02A.817		WHD/TRACTION JYSK	RHC	ASSEMBLY
	/J02A.742	/J02A.775	/J02A.725	/J02A.759			ASSEMBLY
SJ02B134	/J02B.134				RT HND CLP SLW	RHC	0-3111006-0-25
SJ02B167	/J02B.167				R/H WIZARD	RHC	0-3111006-0-25
SJ02B334	/J02B.384	/J02B.367	/J02B.334	/J02B.351	LT WORKHEAD JOYSTICK	LHC	ASSEMBLY
SJ02B409	/J02B.459	/J02B.442	/J02B.409	/J02B.426	LT HOOK JOYSTICK	LHC	ASSEMBLY
SJ02B542	/J02B.542				LT HAND CLAMP SLEW	LHC	0-3111006-0-25
SJ02B575	/J02B.575				LT HAND WIZARD	LHC	0-3111006-0-25
SJ02B609	/J02B.609				HORN	LHC	ASSEMBLY
SJ02B675	/J02B.675				FLOOR CYCLE SWITCH	SEAT	C5363WAK
SJ05325	/J05.325				RR - LOW GEAR PROX	REAR TRANS	2000770
SJ05375	/J05.375				RR - NEUTRAL PROX	REAR TRANS	2000770
SJ05425	/J05.425				RR TRANS SPD SENSOR	REAR TRANS	2006509
SJ05475	/J05.475				RR - HIGH GEAR PROX	REAR TRANS	2000770
SJ06290	/J06.290	/J06.209			LT LINER PB	ECP	ASSEMBLY
SJ06324	/J06.324	/J06.234			LINER LIGHT PB	ECP	ASSEMBLY
SJ06357	/J06.357	/J06.259			RT LINER PB	ECP	ASSEMBLY
SJ06425	/J06.425				RR RT HORN PB	OPT RR HORN BTNS	ASSEMBLY
SJ06459	/J06.459				RR LT HORN PB	OPT RR HORN BTNS	ASSEMBLY
SJ09125	/J09.125				LT UPPER LIMIT SWITCH	WORKHEAD	H5963YAA
SJ09175	/J09.175				LT LOWER LIMIT SWITCH	WORKHEAD	H5963YAA
SJ09225	/J09.225				LT OUTER LIMIT SWITCH	WORKHEAD	H5963YAA
SJ09275	/J09.275				RT OUTER LIMIT SWITCH	WORKHEAD	H5963YAA
SJ09325	/J09.325				RT UPPER LIMIT SWITCH	WORKHEAD	H5963YAA
SJ09375	/J09.375				RT LOWER LIMIT SWITCH	WORKHEAD	H5963YAA
SJ14867	/J14.867	/J14.850			HYDRAULIC TEMP SNDR	HYD TANK	H5133WAT
SJ16150	/J16.150				MANUAL PUMP SWITCH	I/C	H6204YAA
SJ16525	/J16.525				FR - LOW GEAR PROX	FRONT TRANS	2000770
SJ16575	/J16.575				FR - NEUTRAL PROX	FRONT TRANS	2000770
SJ16625	/J16.625				FR TRANS SPD SENSOR	FRONT TRANS	2006509
SJ16675	/J16.675				FR - HIGH GEAR PROX	FRONT TRANS	2000770
SJ18167	/J18.167				DIRT ALARM FILTER P1	HYD TANK	172325-1
SJ18267	/J18.267				DIRT ALARM FILTER P2	HYD TANK	172325-1
SJ18367	/J18.367				DIRT ALARM FILTER P3	HYD TANK	172325-1
SJ18467	/J18.467				DIRT ALARM FILTER P4	HYD TANK	172325-1
SJ18567	/J18.567				DIRT ALARM FILTER P5	HYD TANK	172325-1
SJ18667	/J18.667				DIRT ALARM FILTER P6	HYD TANK	172325-1
SJ18767	/J18.767				DIRT ALARM FILTER P7	HYD TANK	172325-1

CONFIDENTIAL

©COPYRIGHT 2011 HARSCO. THIS DRAWING OR DOCUMENT IS THE PROPERTY OF HARSCO AND EMBODIES CONFIDENTIAL INFORMATION, TRADE SECRET INFORMATION, AND/OR KNOW-HOW THAT IS THE PROPERTY OF HARSCO. BY ACCEPTING THIS DRAWING OR DOCUMENT, THE RECIPIENT AGREES (1) NOT TO PROVIDE, OR OTHERWISE MAKE AVAILABLE, THE DRAWING OR DOCUMENT, OR ANY INFORMATION OR KNOW-HOW EMBODIED THEREIN, TO ANY THIRD PARTY AND (2) NOT TO REPRODUCE OR USE THE DRAWING OR DOCUMENT TO MANUFACTURE ANY APPARATUS OR DEVICE, WITHOUT THE PRIOR WRITTEN AUTHORIZATION OF HARSCO.

CHANGE #		REVISION	DR	DATE
EC501060	A	NEW RELEASE	CJW	05/11
EC501420	B	UPDATE AS BUILT	CJW	06/11

DRAWING TITLE/DESCRIPTION: ELECTRICAL SCHEMATIC Reference

MACHINE TYPE-MODEL: MARK IV

E3 PROJECT FILE NAME: MARK IV HD

SHEET NUMBER: X2

NUMBER OF JUPITER SHEETS: 19

TOTAL NUMBER OF SHEETS: 28

DRAWN BY: CJW

REL. DATE: 05/11

SIZE: D

SCALE:

HARSCO RAIL

E3 DRAWING

5007950

CHAPTER 8
CURVE GEOMETRY

TABLE OF CONTENTS
CURVE GEOMETRY

CHAPTER 8

Curve Geometry 8-1
Curve Without a Spiral 8-1
Measuring a Curve Using a 1 Foot Long Device 8-2
Using the 62 Foot String 8-3
Graphing Using a Machine 8-5
Why Do We Need Spirals? 8-6
Exactly What is a Spiral? 8-6
A Curve with Spirals 8-8
Graphing Spirals Using a 1’ Measuring Device 8-8
Graphing Spirals with 62’ String 8-9
Graphing Spirals Using a Machine 8-10
Graph Offset 8-10
Super-elevation Ramping Location 8-12
Super-elevation 8-13
Throws 8-13

Curve Geometry

This chapter describes the geometry of curves, explains how a curve is measured and describes some of the graphs that may be displayed on System V for a curve. This chapter also describes lining and superelevation.

Curve Without a Spiral

The simplest railroad curve is a length of track, which has constant curvature, or radius, with straight track at each end, and no transition (spiral) between the straight and the curved track. The only measurements needed to line a curve like this are the degree of curvature and the length of the curve. This type of curve is fairly rare in normal track use. One place it does occur is in yards and sidings, where no superelevation is required and which do not justify the extra time and length of track needed to construct spirals.

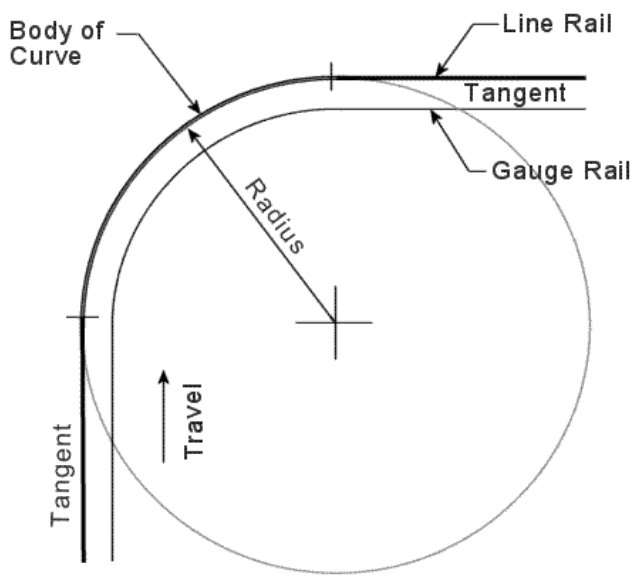

Figure A-1 Simple Curve

For our hypothetical curve, let us assume for now that it is an absolutely perfect curve, with no defects at all. Consider the curve shown in Figure A–1. This figure shows a constant radius curve with tangent rail at either end. It has no spiral, or transition curve. The Line rail, or High rail, located on the outside of the curve, is the one we're interested in; the Gauge or Reference rail, located opposite the Line rail, is not normally used in lining track. In the diagram shown, the curve is Right hand, and the Line rail is the Left rail, looking forward in the direction of travel. The measuring devices used in a curve Reference system Bias against, or press and roll against, the Line rail. Although both rails are shown in this first diagram, later diagrams will show only the Line rail, the one we'll be using for lining track.

In Figure A–2, the same curve is redrawn showing curve stations every 31 feet (the reason for the 31 foot distance will be explained later). A curve station is simply a location measured along the track which is used in measuring the curve. Although the curve is not drawn to scale, you can appreciate that some of the curve stations occur on the tangent track before and after the curve, while some occur within the curve. We have also constructed this curve so that curve stations occur at exactly the point of tangents (between the tangents and the curves).

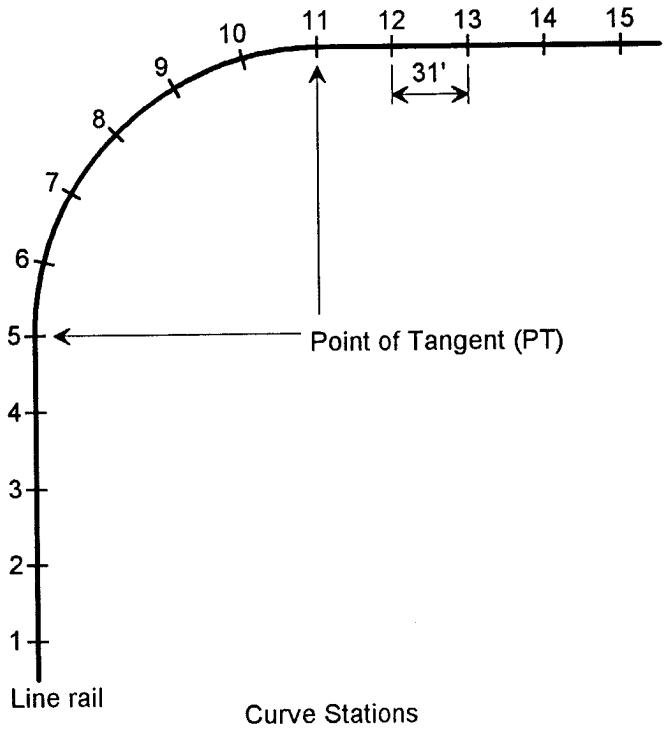

Figure A-2 Curve Stations

Measuring a Curve Using a 1 Foot Long Device

First, let us assume that we have a very small measuring system, only a foot or so long, which can accurately measure the curvature. With a very accurate curve, we could construct such a measuring device using a micrometer. Although this is not practical, it will help show later the problems which occur when we use a measuring system of normal length.

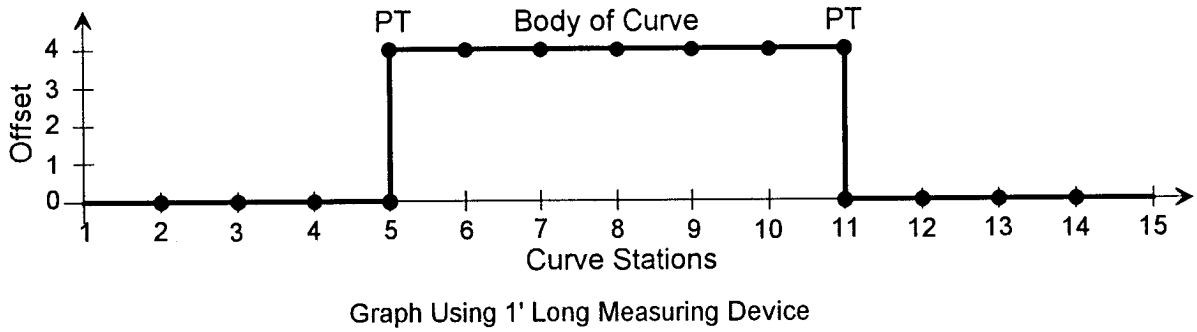

Figure A-3 Graph Using 1' Long Measuring Device

Figure A–3 shows the graph which results from measuring the curve with our small one foot long measuring device. This graph measures Offset along the

curve. Here, Offset is the readout from the measuring device; it could be hundredths of an inch or converted to degrees of curve as shown here . It is a measure of the curvature of the curve. As you might expect, the graph reads Zero along the tangent before the curve as well as the tangent after the curve. At the curve body, the Offset instantly (or over the one foot device length) goes from zero to the maximum Offset in the curve (4 degrees). This occurs instantly because there is no Spiral, or Transition, between the tangent and the curve.

This is a very real and accurate description of the curve as it really is, without any spiral. The problem is, that our method of measurement is not practical. Such a short measuring device could not accurately measure a real curve. Although our example curve is “perfect,” in real life, there is no such thing. Such a short measuring device would measure mostly the small defects, while masking the shape of the curve, which is what we’re after.

Using the 62 Foot String

In practice, curves must be measured with a longer Reference system. One of the systems currently used for String-Lining or measuring a curve is the 62 foot chord. Why 62 feet? Well, it just so happens that if you use a 62 foot long string, stretched tight at each end against the gauge side of the ball of the rail, the Offset distance in inches between the string and the edge of the rail at the center of the string is exactly equal to the degree of curve. For example, if you measure 4

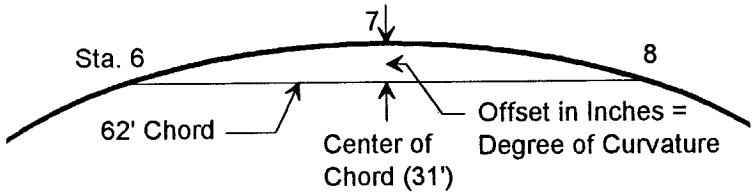

Measuring Degree of Curvature

Figure A-4 Measuring Degree of Curvature

inches, then the curve is a 4 degree curve. Figure A–4 illustrates this arrangement. This is commonly used to both string-line a curve and to check its actual curvature. The “Chord” referred to in the diagram and in other descriptions is the straight distance between any two points on a curve; it is not intended to mean a “cord,” or string, although that could be where it got its name.

To use the 62 foot string to measure our sample curve, first place the string between stations 1 and 3, and measure the Offset at station 2 (this is at the midpoint of the string). The offset is zero (0) because both ends of the string are on tangent track. Then, the string is placed between stations 2 and 4, and the offset is measured as station 3. This pattern is repeated until station 15 is reached. The result of the measurements is the graph shown in Figure A–5.

The 62 foot chord arrangement works out quite well. Naturally, on tangent track, we would read zero Offset, and in a curve we would read the actual degree of curvature for the curve. However, a problem occurs whenever the curvature is not constant, neither zero nor a constant curvature. Even though we know that our example curve is either zero degrees on the tangents or four degrees in the body, when our new “measuring system”, the 62 foot chord, is used at the PT point, we get readings somewhere in between zero and four degrees! How can this be, since we know we don’t have a Spiral? Well, as you move the leading edge of the 62 foot string into the curve, it will be into the curve while the other end is on straight track; it is not completely on tangent or curved track. We will, therefore, get a reading somewhere between zero and four degrees.

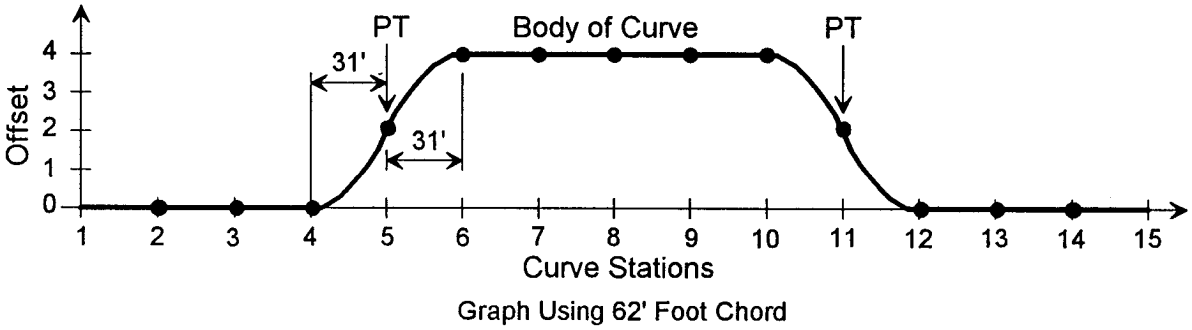

Figure A-5 Graph Using 62 Foot Chord

As we move our measuring system along the track, plotting the measured degree of curvature, we get the graph as shown in Figure A–5. The heavy dots represent the Offset readings at 31 foot intervals (at each curve station). Notice that at the Point of Tangent (PT) points, the apparent Offset is only 2 degrees, one-half that in the body of the curve. This is because when the center of our 62 foot measuring system is at the PT point, the leading half of the system is in the curve, while the trailing half is on tangent track. This gives an Offset reading of one-half of what it would be if the entire system were within the curve. Also notice that if we would take readings continuously, just beyond station 4 the Offset reading begins to curve. With our example system, when the Center of our string is at station 4, the leading end is at station 5, the PT point. Therefore, as the system moves beyond this point, we get an Offset reading due to the fact that the leading end is entering the curve. And the graph of this reading is not straight, since the curve is not straight, but is curved.

Therefore, even this simple 62 foot chord measuring system has “disguised” the curve. From looking at the graph, it “looks” like some sort of transition curve or spiral begins at station 4 and ends at station 6, even though we know it doesn’t exist! The length of the measuring system causes this. The graph will always begin curving when the leading point of the measuring system enters the curve (in

this case, 31 feet before the Center of the measuring system reaches the PT). And the “rounded” area of the graph caused by the measuring system will always be the same length as the measuring system, in this case 62 feet, or two station lengths.

So, a long measuring system, while necessary, makes it look like there’s a spiral where there is none. It also makes the actual PT point much more difficult to locate. These are all problems we can work around, but we must know that they exist.

Graphing Using a Machine

As discussed previously in “Overview” the System V uses a three-point lining system. Most three-point systems are not symmetrical, that is the distance from the Projector to the Shadowboard is usually much more than the distance from the Shadowboard to the Receiver. This is done to improve the Correction Ratio for the machine. When using this system to measure, or record, a curve, this means that we not only have a measuring system of substantial length, but that it records the curve differently when entering and leaving. These factors must be taken into account by any lining system.

For our example curve with no spirals, let us assume, for simplicity, we have a machine with the following dimensions: a projector to shadowboard distance of 80 feet, and a shadowboard to receiver distance of 20 feet. This is similar to our string-lining geometry, except for the distances. With the string, the distance from the leading point to the point where measurements are made is 31 feet, as is the distance from there to the trailing point. With the three-point liner, all measurements are taken at the shadowboard, in this case 80 feet from the leading point.

Figure A–6 shows the resulting graph after measuring the Offset using a machine reference system described above. As might be expected, even though this curve has no transitions or spirals, the long measuring system makes it look like there are spirals. As before, the “rounded” portion of the curve is the same length as the machine length, here 100 feet (80 + 20 = 100). But the beginning of the curved portion starts earlier than before. In fact, it starts when the Projector enters the curve, at which time the Shadowboard is 80 feet before the PT of the curve. And it ends when the Shadowboard is 20 feet past the PT, which is when the Receiver reaches the PT. This curve is not at all like you might have expected; it really does look like it has spirals, even though it does not. All because of the effect of the measuring system length. Also notice that the Offset reading when the Shadowboard is at the beginning of the curve (the PT point) is not 1/2 the maximum of 4 degrees, as it was with the 62 string, which was a symmetrical system.

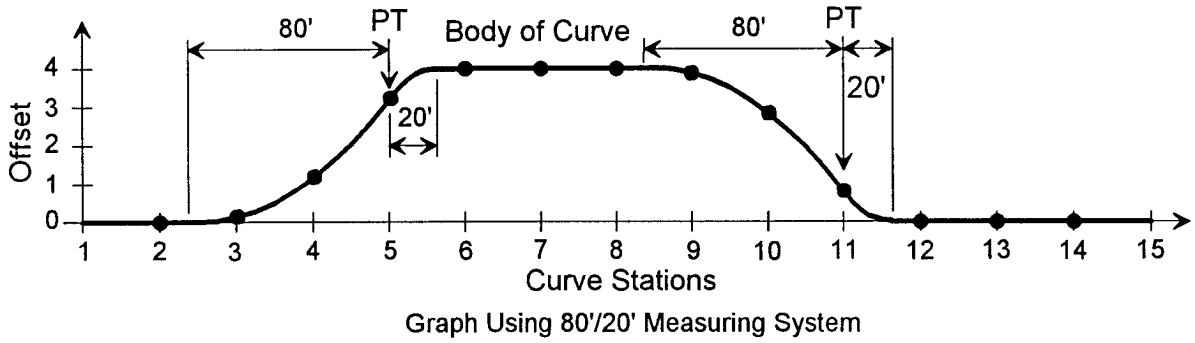

Figure A-6 Graph Using 80'/20' Measuring System

In summary, the normal measuring system used on liners makes the curve intersection points (PT) appear before they actually occur, and make it appear that there are spirals where there are none or make an existing spiral appear longer by the length equal to the length of the machine.

Why Do We Need Spirals?

A Spiral is just a Transition curve which smoothly changes from straight, or tangent track, to the curvature of the main body of the curve. There are at least three reasons the railroad uses spirals: (1) On tight curves, the coupler movement required gets very large; it is greatest when going from tangent to curved track. A spiral reduces the required coupler movement, preventing binding and derailments. (2) At high speeds, if a train goes directly from tangent to curved track, a large overturning force is created. This is like driving your car at 60 mph and then immediately turning the steering wheel ninety degrees. You and your car would violently lean in the direction opposite to the curve. With a spiral, this change in direction occurs gradually, greatly reducing this force. This is exactly the same as moving the steering wheel slowly by ninety degrees. (3) Most railroad curves require superelevation in the bodies. The spiral length usually is the same as the ramping length required by the superelevation. This gives the smoothest ride to passengers and freight, by reducing or eliminating the side force on the train.

Exactly What is a Spiral?

A Spiral, or Transition curve, in its most general sense is any curve which gradually changes in curvature and direction from tangent track to curved track. It can also occur between two curves of different curvature. In practice in the United States, most spirals are Cubic Spirals. They are called this because the distance away from a continuation of straight track varies with the cube of the distance along the track. Consider the enlarged Spiral shown in Figure A–7:

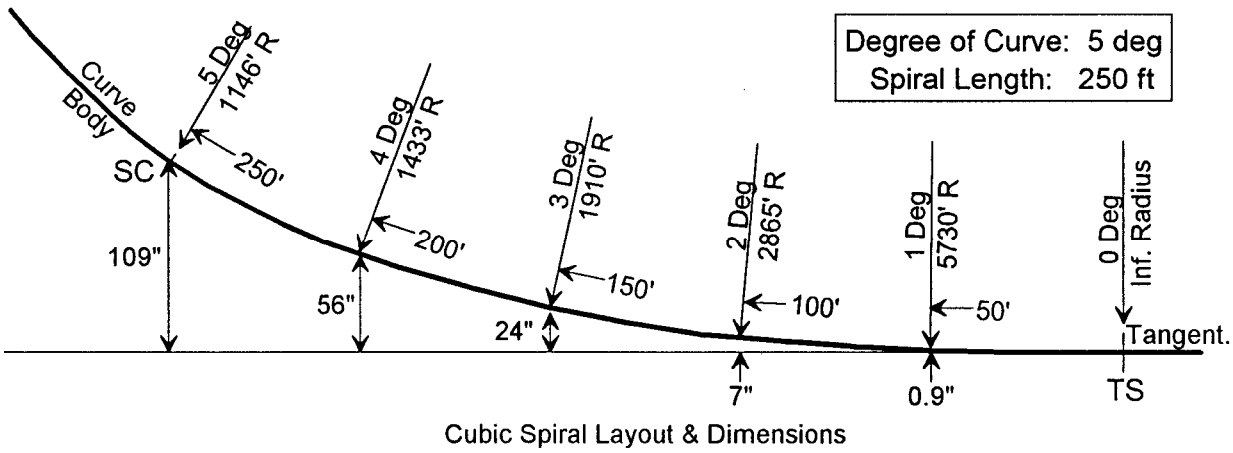

Figure A-7 Cubic Spiral Layout & Dimensions

This is a drawing of a 250 foot long spiral into a five degree curve. The vertical scale has been exaggerated to better demonstrate the shape of the spiral. At the end of the spiral, the curved track is 109 inches, or a little over nine feet, from where tangent track would be. But half-way into the spiral, at a distance of 125 feet, the curved track is not half this distance from the curved track; it would be one-half cubed, (1/2)3, or one-eighth of this distance: only 13.6 inches. At each distance along the track, the distance from tangent track is given: at 50 feet it is only nine-tenths of an inch, in 100 feet about 7 inches, and so on. At a distance of 25 feet from the TS the distance from tangent would only be one-eighth of an inch! No wonder it's very difficult to judge the actual beginning of a spiral by eye!

As the distance along the spiral increases, the distance of the curve from a continuation of the tangent track also increases. What happens to the degree of curve? In this example, a five degree curve, after we travel 50 feet (1/5 of the total spiral length of 250 feet), the degree of curvature is one (1) degree. After 100 feet, it is two (2) degrees, and so forth. The degree of curvature increases linearly along the spiral. This is important, and in fact comes in very handy as you'll see later, since the Offset we measure is proportional to degree of curvature.

The Radius of the curve along the spiral also varies. In the United States we rarely refer to the Radius of the curve, but the radius is also shown in this figure at each position. Notice that if you double the degree of curvature, you reduce the radius by half. Of course, at the beginning of the spiral, the TS (Tangent to Spiral) point, the degree of curvature is zero (0) and the radius is infinite. At the end of the spiral, the SC (Spiral to Curve) point, the degree of curvature reaches the main curve body degree of curvature, and the radius is determined by that value.

A Curve with Spirals

Figure A–8 shows a standard railroad curve with spirals. It consists of a length of tangent track, followed by a spiral, then the curve body, another spiral out of the curve, and finally the tangent track beyond. This is the most common curve occurring in railroad track. To understand how the spirals look to a measuring system, we can make a graph simulating what this entire curve would look like. First, we will graph what it would look like to our one foot long measuring device. This allows us to look at the shape of the curve, while ignoring machine effects.

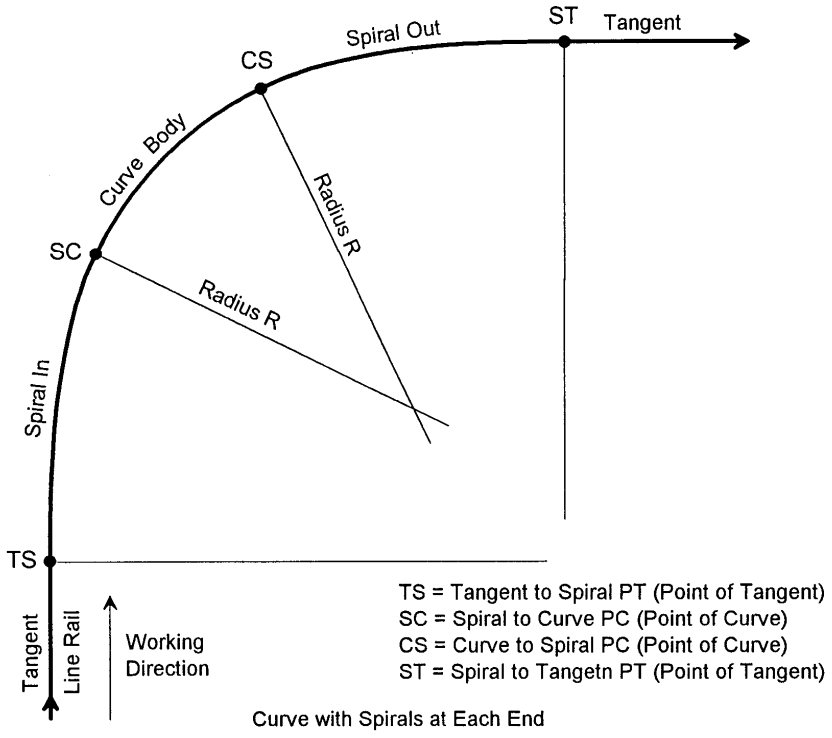

Figure A-8 Curve with Spirals at Each End

Graphing Spirals Using a 1' Measuring Device

Figure A–9 shows the graph of the curve in Figure A–8 as measured by our very short measuring device. By using this very short device, the “rounding” effect that longer measuring systems have is eliminated. As the figure shows, the Offset is zero (0) at each tangent and four (4) degrees within the body of the curve, the same as measured before. But unlike the curve without spirals (Figure A–3), the change from tangent to curve is not instantaneous. Rather, it occurs over the spiral length. The Offset (degree of curvature) increases in a straight line along the spiral from zero to the curve maximum Offset. This increase was also indicated in Figure A–7, the cubic spiral layout. Likewise, during the spiral out of the curve, the Offset decreases in a straight line back to zero. Notice also that from this graph it is very easy to pick out the transition points (TS, SC, CS and ST).

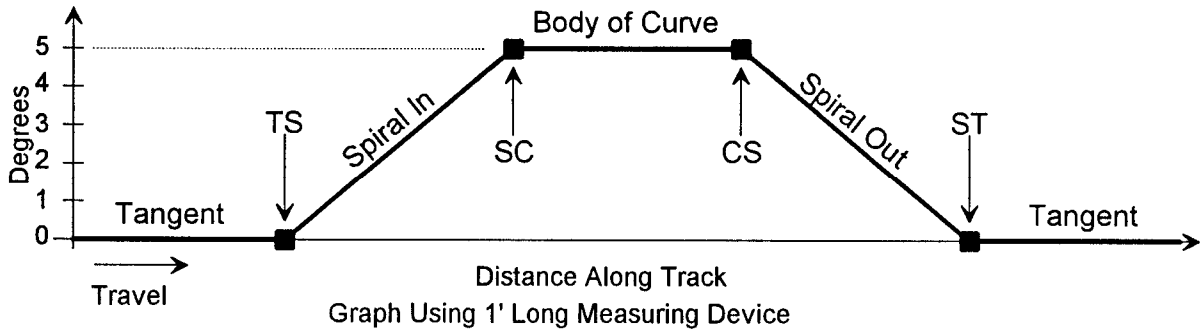

Figure A-9 Graph Using 1' Long Measuring Device

Graphing Spirals with 62' String

Again, the one foot long measuring device isn't realistic. As a next step, let's look at the same curve measured with a 62 foot long string. But rather than show a graph with only points located every 31 feet, we'll show a continuous line representing the measurements taken by the string on a continuous basis, as in Figure A–10.

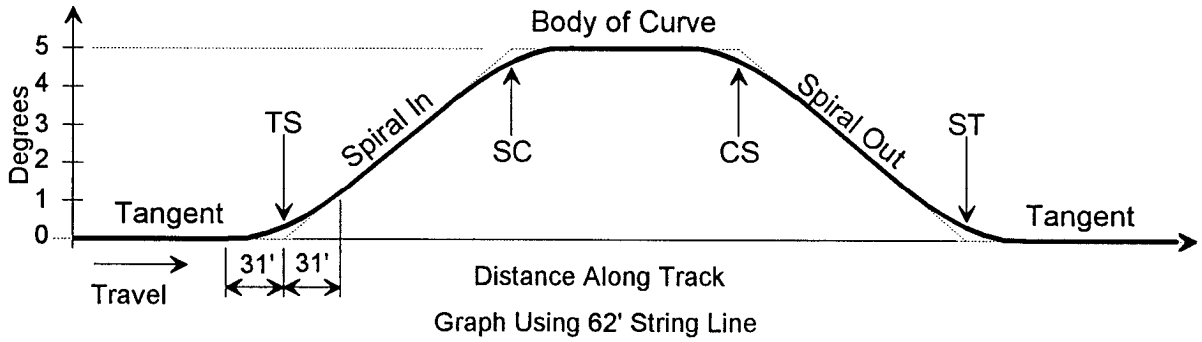

Figure A-10 Graph Using 62' String Line

As reference, this figure shows the graph as measured with our one foot long system as a dotted line, and the graph measured with the 62 foot string as a solid line on top of it. Notice that the string shows exactly the same graph except in the "rounded" areas near each transition point. Actually, the rounded area extends 31 feet on each side of each transition point. As before, when entering the curve (in this case the spiral curve), the measured Offset begins to curve 31 feet before the transition, and continues to curve until 31 feet after the transition. This is the

same at each transition. Still, by extending the straight portion of the Spiral graph, it's pretty easy to locate the transition points.

Graphing Spirals Using a Machine

Finally, let's look at the same curve and graph produced by our example measuring and lining system, with the dimensions of eighty (80) feet from the Projector to the Shadowboard and twenty (20) feet from the Shadowboard to the Receiver. In Figure A–11 the graph produced by this system is shown by a solid line with the graph from our one foot measuring device shown dotted again for reference.

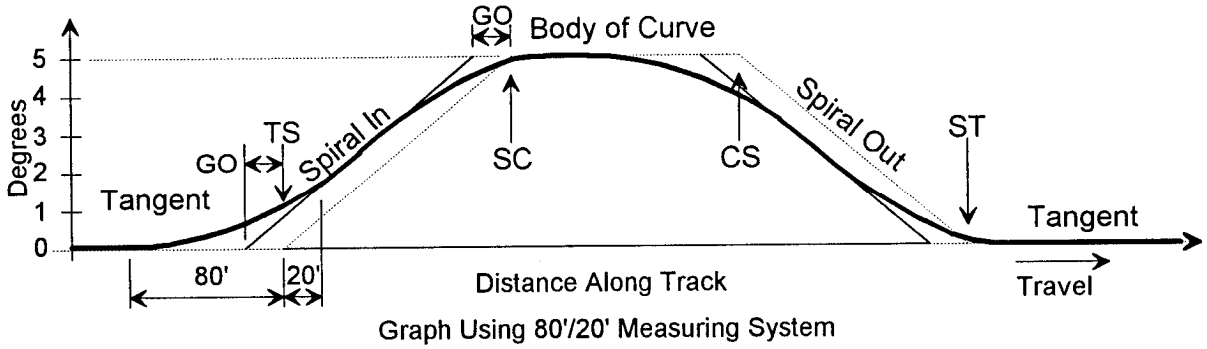

Figure A-11 Graph Using 80'/20' Measuring System

There is quite some change! Some effects of the 100 foot long machine are expected: From what we discussed previously, we would expect the graph to begin to curve eighty feet before the transition, as it does. We also would expect this "rounded" area to continue until twenty feet after the transition, as it does. This is the same effect we saw with the curve with no spirals. And outside the rounded areas, the graph is zero at tangents and five (5) degrees in the body, as expected.

What is not expected, however, is the part of the graph lines in the Spirals. They don't line up with the graph from the short measuring system or the graph from the 62 foot string! Why is this? The reason is something called Graph Offset.

Graph Offset

There are several differences in the graph which results when measuring a curve with a machine rather than a string. Figure A–12 shows an enlarged view of the Spiral into the curve. First, let's go over the graph of the Offset to understand what is occurring at each position. The machine is first entirely on tangent track, during area AB. (Remember, the distance location on the graph represents the Shadowboard position.) When the Shadowboard reaches position B, the Projector is just entering the Spiral at C. During this area marked BD the Projector is in

the Spiral, while the Receiver is still on Tangent track. Area BD is the same length as the machine, and is the “rounded” area of the graph. When the Shadowboard is at the beginning of the curve, marked point C and the TS point, the Offset is already quite large. When the Shadowboard reaches point D, the Receiver is just entering the Spiral; then the entire machine is within the Spiral, for a distance marked DE. This is the only part of the Spiral which is graphed with a straight line.

When the Shadowboard reaches point E, the Projector is just entering the Full Body of the curve, at F. This again creates the “rounding” effect. The Projector is in the Body and the Receiver in the Spiral during the distance marked EG. When the Shadowboard reaches point G, the Receiver is just entering the curve Body. From that point on, during the body of the curve, marked GH, the Offset remains constant.

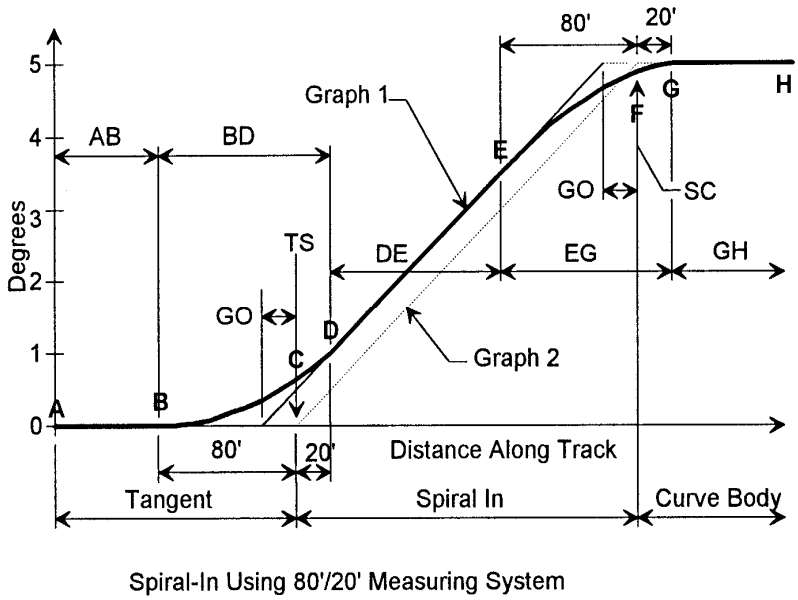

Figure A-12 Spiral-In Using 80’/20’ Measuring System

Notice that the straight line portion of the graph created by the machine (Graph 1) is not in the same location as the straight dotted line (Graph 2) which goes between the TS and SC points. On Spirals into a curve, the graph created (Graph 1) occurs before the expected location (Graph 2). The Graph Offset (GO) is the distance between Graphs 1 and 2. Any Spiral Transitions we locate by extending the graph in the spiral must be moved ahead by the Graph Offset distance.

Notice that the same thing happens on the Spiral Out of the curve, although it appears to be different. As shown in Figure A–13, the recorded Graph 1 again occurs before the expected location (Graph 2). The Graph Offset occurs in the same way, and all the same rules apply in finding transition points and other locations. As with the Spiral In, the "rounded" portions of the graph occur over a machine length beginning eighty (80) feet before the transition point and ending twenty (20) feet after the transition point.

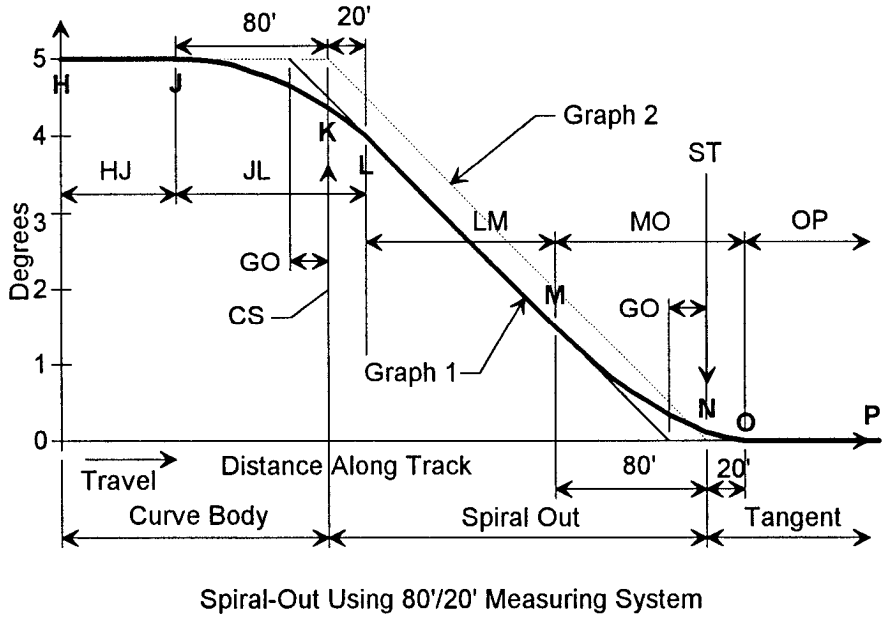

Figure A-13 Spiral-Out Using 80'/20' Measuring System

In summary, the recorded graphs of curves using a standard measuring system displays three important features: (1) The graphs are rounded over a machine length at each transition. (2) This rounding begins when the Projector passes the transition point and ends when the Receiver passes it. (3) The Actual transition point locations are a Graph Offset distance (normally 20 to 25 feet) beyond the apparent transition distances found by examining the graphs of the spirals.

Superelevation Ramping Location

As discussed in the previous section, the recorded graph of a curve appears to be located before the true transition points, by a distance known as Graph Offset. Superelevation, however, is normally ramped in using actual curve transition points, and will therefore not correspond to the graph location. This is normal and

correct, and although somewhat confusing, System V knows all the required values and will properly locate Superelevation Ramping.

Superelevation

Superelevation, also called Crosslevel, is the number of inches the height of the Line rail is raised above the height of the Gauge (Reference) rail. When you are surfacing track, both rails are raised, so that the surface can be improved and defects removed or minimized. The amount of raise, on average, is called the Lift. Superelevation, however, indicates how much higher the Line rail is above the Gauge rail. Actual Super is the condition of the Super before surfacing. Desired Super is the calculated amount of Superelevation, to which you will be setting the track. Please refer Figure A–14.

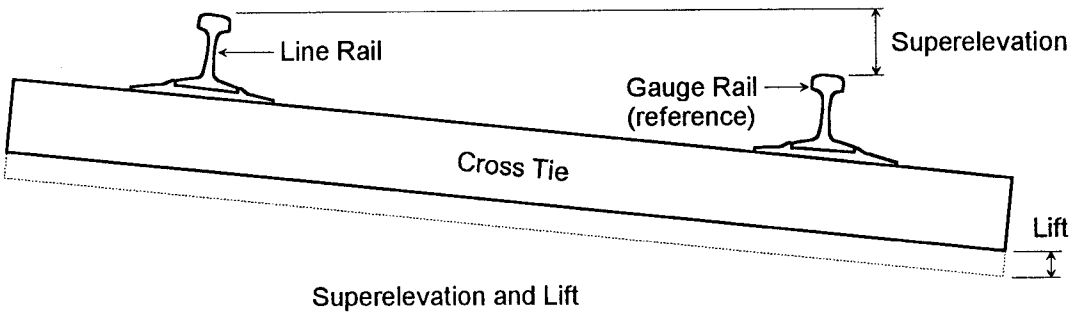

Figure A-14 Superelevation and Lift

On Tangent track, the Superelevation will normally always be zero (0), because the Line rail and the Gauge rail are normally at the same level. The Superelevation value during curves will be determined by the degree of curve and the rated train speed. This information may be obtained from track charts or your Engineering department. The Super will normally remain constant throughout the body of the curve. It will ramp from zero (0) at the beginning of the Spiral into the curve, to its maximum value at the beginning of the full Curve body. On the Spiral out of the curve, it will ramp from its maximum value at the end of the Curve body, to zero at the end of the Spiral.

Special conditions sometimes require the transition points used for the ramping of Superelevation to be somewhat different from those used in Lining the curve. This is acceptable provided it is approved by your Engineering department or Survey team.

Throws

Throws, the movement of the rail during Lining, is a simple concept, but is not so simple to measure. Where throws are referred to, it means the actual sideways

movement of the track in reference to a non-moving object. One way of measuring Throws is to drive a stake in the ground beyond the area of the roadbed affected by the tamping operation. Measure to a particular part of the rail before the tamper reaches the track, and again after the tamper has lined and surfaced and is completely past the area. An alternate method is to measure from the ball of the rail to the ball of the neighboring rail, in double-track territory. You can also estimate the Throw by holding a tape measure just to the side of and at the end of the tie, while holding the other end firmly against the ground. (Be careful of tamping tools and thrown stones while doing any measuring.) This is not as exact a method, but can give you a rough idea of the Throw.

You can not estimate Throws by observing from the cab. What you see from the cab is the local movement of the rail at the lining head in relationship to the rail previously lined. The amount of movement you see from the cab will usually be less than the actual movement. Also, oftentimes when observing from the cab it will appear that the rail is being moved opposite to the direction it is actually moving.

Although you can estimate direction of throws by observing the ballast at either end of the ties, it is very difficult to estimate the actual Throw. Differing types and depths of ballast, as well as the amount of Lift, affect the appearance of the ballast at the ends of the ties.

CHAPTER 9
TORQUE / CONVERSION / GLOSSARY

CHAPTER 9 - TORQUE / CONVERSION / GLOSSARY
TABLE OF CONTENTS

Torque - Standard Type Fasteners. . . . . 9 - 2
Torque - Serrated Type Flange Fasteners . . . . . 9 - 3
Torque - Metric Type Fasteners . . . . . 9 - 4
Torque - Hydraulic Hoses and Fittings . . . . . 9 - 6
Conversion - Minutes Degree To Decimal Degree. . . . . 9 - 7
Conversion - Fractions To Decimal Inch To Millimeters . . . . . 9 - 9
Conversion - Millimeters To Decimal Inch . . . . . 9 - 10
Conversion - Inch To Decimal Feet . . . . . 9 - 10
Conversion - Feet To Meters . . . . . 9 - 11
Conversion - Pounds To Kilograms . . . . . 9 - 12
Conversion - Pounds Per Square Inch To Bar. . . . . 9 - 12
Conversion - Pounds Per Square Inch To Kilopascals . . . . . 9 - 12
Conversion - Fahrenheit To Celsius (Centigrade) . . . . . 9 - 12
Conversion - Miles Per Hour To Kilometers Per Hour . . . . . 9 - 14
Conversion - Gallons To Liters. . . . . 9 - 14
Glossary - Terms and Meanings . . . . . 9 - 15

Bolt Torque

BOLT TORQUE REQUIREMENTS TABLE
SAE STANDARD TYPE FASTENERS

The torque values listed below are for standard-type fasteners only. The torque values listed are based on wet and (lubricated) dry conditions. The torque values for 1/4 and 5/16 inch size fasteners are listed in lb-in and N-m torque equivalents. The torque values for all other size fasteners are listed lb-ft and N-m torque equivalents. Use lower grade torque values if bolt and nut have different SAE grades. Manufacturer's SAE grade markings may vary.

STANDARD MARKINGS AND TORQUE SPECIFICATIONS

SAE Grade	1 or 2				5				8			
Fastener Standard SAE Grade Markings	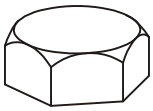				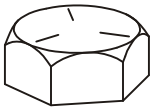				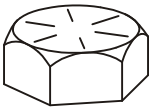			
Fastener Body Size Inch-Thread	Torque				Torque				Torque			
	Wet		Dry		Wet		Dry		Wet		Dry	
	lb-in	N-m	lb-in	N-m	lb-in	N-m	lb-in	N-m	lb-in	N-m	lb-in	N-m
1/4 - 20	49	5.5	65	7.3	75	8.5	100	11.3	107	12.0	142	16.0
1/4 - 28	56	6.5	74	8.3	86	9.7	114	12.8	122	13.8	162	18.3
5/16 - 18	103	11.6	137	15.5	157	17.7	208	23.5	220	24.8	293	33.1
5/16 - 24	113	12.7	150	16.9	173	19.5	230	25.9	244	27.5	325	36.7
Fastener Body Size Inch-Thread	Torque				Torque				Torque			
	Wet		Dry		Wet		Dry		Wet		Dry	
	lb-ft	N-m	lb-ft	N-m	lb-ft	N-m	lb-ft	N-m	lb-ft	N-m	lb-ft	N-m
3/8 - 16	15	20	20	27	23	31	31	42	32	43	43	58
3/8 - 24	17	23	23	31	26	35	35	47	37	50	49	66
7/16 - 14	24	32	32	43	37	50	49	66	52	70	69	93
7/16 - 20	27	36	36	49	42	57	56	76	58	78	77	104
1/2 - 13	39	53	52	70	57	77	76	103	80	108	106	144
1/2 - 20	41	55	55	74	64	87	85	115	90	122	120	163
9/16 - 12	53	72	71	96	82	111	109	148	115	156	153	207
9/16 - 18	59	80	78	106	91	123	121	164	129	175	172	233
5/8 - 11	73	99	97	131	113	155	150	203	160	217	213	289
5/8 - 18	83	112	110	149	128	173	170	230	180	244	239	324
3/4 - 10	129	175	172	233	200	271	266	361	282	382	375	508
3/4 - 16	144	195	192	260	223	302	297	403	315	427	419	568
7/8 - 9	124	168	165	224	323	438	430	583	454	615	604	819
7/8 - 14	138	187	184	249	355	481	472	640	501	679	666	903
1 - 8	188	255	250	339	483	655	642	870	681	923	906	1228
1 - 14	210	285	279	378	541	733	720	976	764	1036	1016	1377
1-1/8 - 7	266	361	354	480	596	808	793	1075	966	1310	1285	1742
1-1/8 - 12	297	403	395	535	668	906	888	1204	1083	1468	1440	1952
1-1/4 - 7	375	508	499	676	841	1140	1119	1517	1363	1848	1813	2458
1-1/4 - 12	415	563	552	748	930	1261	1237	1677	1509	2046	2007	2721
1-3/8 - 6	492	667	654	887	1102	1494	1466	1988	1787	2423	2377	3223
1-3/8 - 12	560	759	745	1010	1255	1701	1670	2264	2034	2758	2705	3667
1-1/2 - 6	653	885	868	1177	1463	1983	1946	2638	2371	3215	3153	4275
1-1/2 - 12	734	995	976	1323	1645	2230	2188	2966	2668	3617	3548	4810

Bolt Torque

BOLT TORQUE REQUIREMENTS TABLE
SAE SERRATED TYPE FLANGE FASTENERS

The torque values listed below are for serrated-type flange fasteners only. The torque values listed are based on wet (lubricated) and dry conditions. The torque values for all other size fasteners are listed in lb-ft and N-m torque equivalents. Use lower grade torque values if bolt and nut have different SAE grades. Manufacturer's SAE grade markings may vary.

STANDARD MARKINGS AND TORQUE SPECIFICATIONS

SAE Grade	1 or 2				5			
Fastener Standard SAE Grade Markings	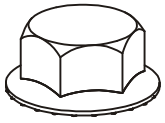				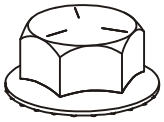			
Fastener Body Size Inch-Thread	Torque				Torque			
	Wet		Dry		Wet		Dry	
	lb-ft	N-m	lb-ft	N-m	lb-ft	N-m	lb-ft	N-m
1/4 - 20	8	10.8	11	14.9	11	14.9	15	20.3
1/4 - 28	9	12.2	12	16.3	12	16.3	16	21.7
5/16 - 18	13	17.6	17	23.0	20	27.1	27	36.6
5/16 - 24	13	17.6	17	23.0	32	43.3	43	58.3
3/8 - 16	23	31	31	42	40	54	53	72
3/8 - 24	25	34	33	45	43	58	57	77
7/16 - 14	38	51	51	69	55	74	73	99
7/16 - 20	40	54	53	72	60	81	80	108
1/2 - 13	60	81	80	108	95	129	127	172
1/2 - 20	65	88	87	118	100	135	133	180
9/16 - 12	78	106	104	141	140	190	187	253
9/16 - 18	85	115	113	153	150	203	200	271
5/8 - 11	125	169	167	226	190	258	253	343
5/8 - 18	135	183	180	244	220	298	293	397
3/4 - 10	225	305	300	407	350	474	467	633
3/4 - 16	250	339	333	451	400	542	533	723
7/8 - 9	350	474	467	633	550	746	733	994
7/8 - 14	375	508	500	678	600	813	800	1085
1 - 8	480	651	640	868	750	1017	1000	1356
1 - 14	500	678	666	903	800	1085	1066	1445

Bolt Torque

BOLT TORQUE REQUIREMENTS TABLE
METRIC TYPE FASTENERS

Do not use these values if a different torque value or tightening procedure is given for a specific application. Torque values listed are for general use only. Check tightness of fasteners periodically. Fasteners should be replaced with the same or higher property class. If higher property class fasteners are used, these should only be tightened to the strength of the original. Make sure fastener's threads are clean and that thread engagement is properly started. This will help prevent them from failing when tightening.

* Lubricated means coated with a lubricant such as engine oil, or fasteners with phosphate and oil coatings. Dry means plain or zinc plated without any lubrication.

Property Class and Head Markings	4.8	8.8	9.8
	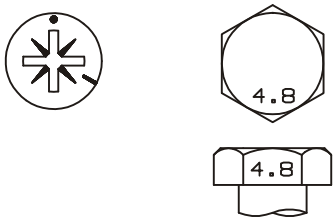	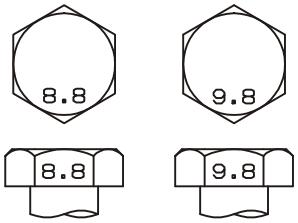	

Property Class and Head Markings	5	10
	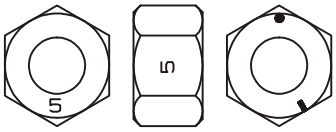	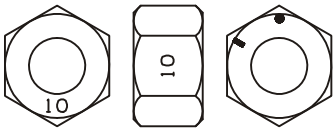

Size	Class 4.8				Class 8.8 or 9.8			
	* Lubricated		* Dry		* Lubricated		* Dry	
	N-m	lb-ft	N-m	lb-ft	N-m	lb-ft	N-m	lb-ft
M6	4.8	3.5	6	4.5	9	6.5	11	8.5
M8	12	8.5	15	11	22	16	28	20
M10	23	17	29	21	43	32	55	40
M12	40	29	50	37	75	55	95	70
M14	63	47	80	60	120	88	150	110
M16	100	73	125	92	190	140	240	175
M18	135	100	175	125	260	195	330	250
M20	190	140	240	180	375	275	475	350
M22	260	190	330	250	510	375	650	475
M24	330	250	425	310	650	475	825	600
M27	490	360	625	450	950	700	1200	875
M30	675	490	850	625	1300	950	1650	1200
M33	900	675	1150	850	1750	1300	2200	1650
M36	1150	850	1450	1075	2250	1650	2850	2100

Bolt Torque

BOLT TORQUE REQUIREMENTS TABLE
METRIC TYPE FASTENERS

Do not use these values if a different torque value or tightening procedure is given for a specific application. Torque values listed are for general use only. Check tightness of fasteners periodically. Fasteners should be replaced with the same or higher property class. If higher property class fasteners are used, these should only be tightened to the strength of the original. Make sure fastener's threads are clean and that thread engagement is properly started. This will help prevent them from failing when tightening.

* Lubricated means coated with a lubricant such as engine oil, or fasteners with phosphate and oil coatings. Dry means plain or zinc plated without any lubrication.

Property Class and Head Markings	10.9	12.9
	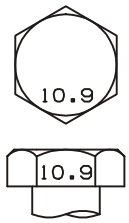	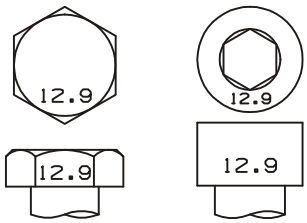
Property Class and Head Markings	**10**	**12**
	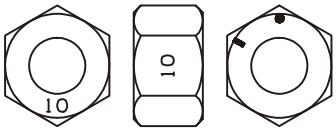	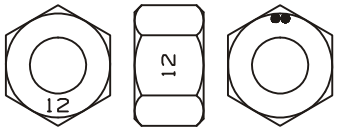

Size	Class 10.9				Class 12.9			
	* Lubricated		* Dry		* Lubricated		* Dry	
	N-m	lb-ft	N-m	lb-ft	N-m	lb-ft	N-m	lb-ft
M6	13	9.5	17	12	15	11.5	19	14.5
M8	32	24	40	30	37	28	47	35
M10	63	47	80	60	75	55	95	70
M12	110	80	140	105	130	95	165	120
M14	175	130	225	165	205	150	260	190
M16	275	200	350	255	320	240	400	300
M18	375	275	475	350	440	325	560	410
M20	530	400	675	500	625	460	800	580
M22	725	540	925	675	850	625	1075	800
M24	925	675	1150	850	1075	800	1350	1000
M27	1350	1000	1700	1250	1600	1150	2000	1500
M30	1850	1350	2300	1700	2150	1600	2700	2000
M33	2500	1850	3150	2350	2900	2150	3700	2750
M36	3200	2350	4050	3000	3750	2750	4750	3500

Hydraulic Hose and Fittings Torque

HYDRAULIC HOSES AND FITTINGS TORQUE REQUIREMENTS TABLE

Straight Thread O-Ring Boss Low Pressure with 37° (SAEJ514)				Straight Thread O-Ring Boss High Pressure with O-Ring Seal (ORS) (J1453)			
Dash Size	Thread Size (inches)	Jam Nut or Straight Fitting Torque		Dash Size	Thread Size (inches)	Jam Nut or Straight Fitting Torque	
		lb-ft	N-m			lb-ft	N-m
-03	3/8-24	8-9	12-13	-03	3/8-24	8-10	11-13
-04	7/16-20	13-15	18-20	-04	7/16-20	14-16	20-22
-05	1/2-20	14-15	19-21	-05	1/2-20	18-20	24-27
-06	9/16-18	23-24	32-33	-06	9/16-18	24-26	33-35
-08	3/4-16	40-43	55-57	-08	3/4-16	50-60	68-78
-10	7/8-14	43-48	59-64	-10	7/8-14	72-80	98-110
-12	1-1/16-12	68-75	93-101	-12	1-1/16-12	125-135	170-183
-14	1-3/16-12	83-90	113-122	-14	1-3/16-12	160-180	215-245
-16	1-5/16-12	112-123	152-166	-16	1-5/16-12	200-220	270-300
-20	1-5/8-12	146-161	198-218	-20	1-5/8-12	210-280	285-380
-24	1-7/8-12	154-170	209-230	-24	1-7/8-12	270-360	370-490
-32	2-1/2-12	218-240	296-325				

O-Ring Seal (ORS)				SAE 37° (JIC)			
Dash Size	Thread Size (inches)	Swivel Nut		Dash Size	Thread Size (inches)	Swivel Nut	
		lb-ft	N-m			lb-ft	N-m
-04	9/16-18	10-12	14-16	-04	7/16-20	11-12	15-16
-06	11/16-16	18-20	24-27	-05	1/2-20	15-16	20-22
-08	13/16-16	32-35	43-47	-06	9/16-18	18-20	24-28
-10	1-14	46-50	62-68	-08	3/4-16	38-42	52-58
-12	1-3/16-12	65-70	88-95	-10	7/8-14	57-62	77-85
-16	1-7/16-12	92-100	125-136	-12	1-1/16-12	79-87	108-119
-20	1-11/16-12	125-140	170-190	-16	1-5/16-12	108-113	148-154
-24	2-12	150-165	204-224	-20	1-5/8-12	127-133	173-182
				-24	1-7/8-12	158-167	216-227
				-32	2-1/2-12	245-258	334-352

Metric			British Standard Pipe Parallel (BSPP)		
Thread Size	Straight Adapter or Locknut Torque		Thread Size	Straight Adapter or Locknut Torque	
mm	lb-ft	N-m	Inches **	lb-ft	N-m
M10 x 1	13-15	18-20	G 1/8-28	13-15	18-20
M12 x 1.5	15-19	20-25	G 1/4-19	19-23	25-30
M14 x 1.5	19-23	25-30	G 3/8-19	33-40	45-55
M16 x 1.5	33-40	45-55	G 1/2-14	55-70	75-95
M18 x 1.5	37-44	50-60	G 3/4-14	103-118	140-160
M20 x 1.5	52-66	70-90	G 1-11	162-184	220-250
M22 x 1.5	55-70	75-95	G 1-1/4-11	170-192	230-260
M26 x 1.5	81-96	110-130	G 1-1/2-11	258-347	350-470
M27 x 2	96-111	130-150			
M33 x 2	162-184	220-250			
M42 x 2	170-192	230-260			
M48 x 2	258-347	350-470			

** "G" denotes parallel threads, other than ISO 6149 (Port connection only)

Unit Conversions

This section provides information on conversion of various units of measurement used in lining and surfacing operations. Throughout this manual, some units and their conversion are mentioned, usually with examples. Here, however, you will find additional information and examples to assist you in normal operation. In addition, metric conversion charts are included; while the current U.S. version of System V does not utilize metric units, you may still find it useful to have this information available.

Degrees and Minutes to Decimal Degrees

In any calculation, it is usually easier to work with Degrees in decimals. We are more familiar with decimals as a portion of a whole, such as with 0.25 representing one-fourth (1/4). It is somewhat less intuitive that fifteen (15) minutes of one degree is also one-fourth of one degree. However, most track charts show curvature in degrees and minutes. The chart below will help in converting minutes of a degree to decimal degrees and vice versa.

To use the chart to convert minutes of a degree to decimal degrees, look the number of minutes up in the Minutes column, and read the equivalent decimal in the Decimal column. For example, 25 minutes is equivalent to 0.42 degrees. The number of whole degrees does not change. For example, 6 degrees 15 minutes would convert to 6.25 degrees.

Another way of arriving at decimal degrees is to divide the number of minutes by sixty (60). For example, to convert 4 degrees 38 minutes, take the minutes portion (38) and divide by 60, giving 0.63 (rounded off). The correct conversion is 4.63 degrees.

MINUTES DEGREE TO DECIMAL DEGREE CONVERSION TABLE
1 MINUTE DEGREE = 0.017 DECIMAL DEGREE

MINUTE	DECIMAL	MINUTE	DECIMAL	MINUTE	DECIMAL	MINUTE	DECIMAL
1	0.02	16	0.27	31	0.52	46	0.77
2	0.03	17	0.28	32	0.53	47	0.79
3	0.05	18	0.30	33	0.55	48	0.80
4	0.07	19	0.32	34	0.57	49	0.82
5	0.08	20	0.33	35	0.58	50	0.83
6	0.10	21	0.35	36	0.60	51	0.85
7	0.12	22	0.37	37	0.62	52	0.87
8	0.13	23	0.38	38	0.63	53	0.88
9	0.15	24	0.40	39	0.65	54	0.90
10	0.17	25	0.42	40	0.67	55	0.92
11	0.18	26	0.43	41	0.68	56	0.93
12	0.20	27	0.45	42	0.70	57	0.95
13	0.22	28	0.47	43	0.72	58	0.97
14	0.23	29	0.48	44	0.73	59	0.98
15	0.25	30	0.50	45	0.75	60	1.00

Unit Conversions

Metric and English Conversions

The U.S. versions of the Compu-Liner system, as well as some versions made for export, use English units for dimensions and distances, while certain other versions use Metric units. With either system, there may be a time when you have to convert from one system to the other. The following conversion tables will then be useful. In each case, values have been rounded to a normal level of accuracy. By definition, there are 25.4 millimeters (mm) per inch, and other conversions of length are derived from this.

In addition, the following relationships hold true:

1 inch = 1.00 inch (decimal) = 25.4 mm (millimeters)
1 mm (millimeter) = 0.40 inch (decimal)
1 m (meter) = 100 cm (centimeters) = 1000 mm (millimeters) = 39.27 inches
1 km (kilometer) = 1000 m (meter) = 0.621 mile
1 mile = 1.61 km (kilometers) = 5280 feet = 1.15 nautical miles
1 kg (kilogram) = 2.2 lb (pounds) = 1000 g (grams)
1 gallon = 3.785 l (liters) = 4 quarts
1 square meter = 10.65 square feet
1 kw (kilowatt) = 0.75 hp (horsepower)
1 tonne (metric ton) = 1000 kg (kilograms) = 2205 lb (pounds) = 1.10 tons
1 ton = 2000 lb (pounds) = 907.18 kg (kilograms)
50 mph (miles per hour) = 80.5 kph (kilometers per hour) = 43.4 knots
100 psi (pounds square inch)= 6.9 bar = 68.9 kPa (kilopascals)
100 hp (horsepower) = 74.6 kW (kilowatts)

Please refer to the conversion tables on the following page.

Fractions to Decimal Inch to Millimeters

A useful conversion is between fractions and decimals and millimeters. This is often done using inches, such as in specifying superelevation. You probably know that 2-1/2 inches of superelevation is the same as 2.50, but you may not know that 3-7/8 inches is the same as 3.87 inches. The following chart shows one column with fractions, one column with decimals and one column with millimeters. To convert, simply look up the value you want to convert in the appropriate column, either in Fraction, Decimal or Millimeters, and read the conversion in the adjacent column. The decimal values given in the table are rounded to two places, or within one-hundredth of an inch. Normally, accuracy to two places is sufficient.

In addition, some fractions are given in two forms; for example 1/4 inch is also listed as 2/8 inch. This is because in most versions of the lining and surfacing system, desired superelevation for tamping and lining is displayed in eighths, so 1/2 inch is also listed as 4/8 inch and 3/4 inch is also listed as 6/8 inch.

Unit Conversions

FRACTIONS TO DECIMAL INCH TO MILLIMETERS CONVERSION TABLE
1 INCH = 1.00 DECIMAL = 25.4 MILLIMETERS

FRACTION	DECIMAL	MILLIMETER	FRACTION	DECIMAL	MILLIMETER
1/64	.02	0.40	33/64	.52	13.10
1/32	.03	0.79	17/32	.53	13.50
3/64	.05	1.19	35/64	.55	13.89
1/16	.06	1.59	9/16	.56	14.29
5/64	.08	1.98	37/64	.58	14.68
3/32	.09	2.38	19/32	.59	15.08
7/64	.11	2.78	39/64	.61	15.48
1/8	.13	3.18	5/8	.63	15.88
9/64	.14	3.57	41/64	.64	16.27
5/32	.16	3.97	21/32	.66	16.67
11/64	.17	4.37	43/64	.67	17.07
3/16	.19	4.76	11/16	.69	17.46
13/64	.20	5.16	45/64	.70	17.86
7/32	.22	5.56	23/32	.72	18.26
15/64	.23	5.95	47/64	.73	18.65
1/4 or 2/8	.25	6.35	3/4 or 6/8	.75	19.05
17/64	.27	6.75	49/64	.77	19.45
9/32	.28	7.14	25/32	.78	19.85
19/64	.30	7.54	51/64	.80	20.24
5/16	.31	7.94	13/16	.81	20.64
21/64	.33	8.33	53/64	.83	21.03
11/32	.34	8.73	27/32	.84	21.43
23/64	.36	9.13	55/64	.86	21.83
3/8	.38	9.52	7/8	.88	22.23
25/64	.39	9.92	57/64	.89	22.62
13/32	.41	10.32	29/32	.91	23.02
27/64	.42	10.72	59/64	.92	23.42
7/16	.44	11.11	15/16	.94	23.81
29/64	.45	11.51	61/64	.95	24.21
15/32	.47	11.91	31/32	.97	24.61
31/64	.48	12.30	63/64	.98	25.00
1/2 or 4/8	.50	12.70	1	1.00	25.40

Unit Conversions

MILLIMETERS TO DECIMAL INCH CONVERSION TABLE
1 MILLIMETER = 0.04 INCH

MILLIMETERS	INCH	MILLIMETERS	INCH	MILLIMETERS	INCH
1	0.04	10	0.39	100	3.94
2	0.08	20	0.79	200	7.87
3	0.12	30	1.18	300	11.81
4	0.16	40	1.57	400	15.75
5	0.20	50	1.97	500	19.69
6	0.24	60	2.36	600	23.62
7	0.28	70	2.76	700	27.56
8	0.31	80	3.15	800	31.50
9	0.35	90	3.54	900	35.43
10	0.39	100	3.94	1000	39.37

Inches to Decimal Feet

Decimal feet, rather than feet and inches, are used in entering machine dimensions into the lining and surfacing system. The chart below will assist in converting any measurements made in inches into decimal feet. For example, should you measure the shadowboard-to-receiver dimension as 13 feet 10 inches, you would convert the 10 inches to 0.83 feet and enter a value of 13.83 feet. Likewise, if you see displayed a distance of 89.33 feet, you would be able to determine that it is the same as 89 feet 4 inches.

INCH TO DECIMAL FEET CONVERSION TABLE
1 INCH = 0.0833 DECIMAL FEET

FRACTION	DECIMAL	INCH	DECIMAL
1/8	0.01	1	0.08
1/4	0.02	2	0.17
3/8	0.03	3	0.25
1/2	0.04	4	0.33
5/8	0.05	5	0.42
3/4	0.06	6	0.50
7/8	0.07	7	0.58
1	0.08	8	0.67
		9	0.75
		10	0.83
		11	0.92
		12	1.00

Unit Conversions

FEET TO METERS CONVERSION TABLE
1 FOOT = 0.3048 METER

FOOT	METER	FEET	METER	FEET	METER	FEET	METER
0.1	0.03	1	0.31	10	3.05	100	30.48
0.2	0.06	2	0.61	20	6.10	200	60.96
0.3	0.09	3	0.91	30	9.14	300	91.44
0.4	0.12	4	1.22	40	12.19	400	121.92
0.5	0.15	5	1.52	50	15.24	500	152.40
0.6	0.18	6	1.83	60	18.29	600	182.88
0.7	0.21	7	2.13	70	21.34	700	213.36
0.8	0.24	8	2.44	80	24.38	800	243.84
0.9	0.27	9	2.74	90	27.43	900	274.32
1.0	0.31	10	3.05	100	30.48	1,000	304.80

METERS TO FEET CONVERSION TABLE
1 METER = 3.2808 FEET

METER	FOOT	METER	FEET	METER	FEET	METER	FEET
0.1	0.33	1	3.28	10	32.8	100	328.1
0.2	0.66	2	6.56	20	65.6	200	656.2
0.3	0.98	3	9.84	30	98.4	300	984.2
0.4	1.31	4	13.12	40	131.2	400	1,312.3
0.5	1.64	5	16.40	50	164.0	500	1,640.4
0.6	1.97	6	19.68	60	196.8	600	1,968.5
0.7	2.29	7	22.97	70	229.7	700	2,296.6
0.8	2.62	8	26.25	80	262.5	800	2,624.7
0.9	2.95	9	29.53	90	295.3	900	2.952.7
1.0	3.28	10	32.80	100	328.1	1,000	3,280.9

Unit Conversions

POUNDS TO KILOGRAM CONVERSION TABLE
1 POUND = 0.4536 KILOGRAM

LB	KG	LB	KG	LB	KG	LB	KG	LB	KG
0.1	0.05	1	0.45	10	4.54	100	45.36	1,000	453.59
0.2	0.09	2	0.91	20	9.07	200	90.72	2,000	907.18
0.3	0.14	3	1.36	30	13.61	300	136.08	3,000	1,360.78
0.4	0.18	4	1.81	40	18.14	400	181.44	4,000	1,814.37
0.5	0.23	5	2.27	50	22.68	500	226.80	5,000	2,267.96
0.6	0.27	6	2.72	60	27.22	600	272.16	6,000	2,721.55
0.7	0.32	7	3.18	70	31.75	700	317.51	7,000	3,175.15
0.8	0.36	8	3.63	80	36.29	800	362.87	8,000	3,628.74
0.9	0.41	9	4.08	90	40.82	900	408.23	9,000	4,082.33
1.0	0.45	10	4.54	100	45.36	1,000	453.59	10,000	4,535.92

POUNDS PER SQUARE INCH TO BAR CONVERSION TABLE
1 PSI = 0.06895 BAR

PSI	BAR	PSI	BAR	PSI	BAR	PSI	BAR
1	0.07	10	0.69	100	6.90	1,000	68.95
2	0.14	20	1.38	200	13.79	2,000	137.90
3	0.21	30	2.07	300	20.68	3,000	206.84
4	0.28	40	2.76	400	27.58	4,000	275.80
5	0.35	50	3.45	500	34.47	5,000	344.70
6	0.41	60	4.14	600	41.36	6,000	413.64
7	0.48	70	4.83	700	48.26	7,000	482.58
8	0.55	80	5.52	800	55.15	8,000	551.52
9	0.62	90	6.21	900	62.05	9,000	620.46
10	0.69	100	6.90	1,000	68.95	10,000	689.48

POUNDS PER SQUARE INCH TO KILOPASCALS CONVERSION TABLE
1 PSI = 6.895 kPa

PSI	kPa	PSI	kPa
1	6.90	10	68.95
2	13.79	20	137.90
3	20.68	30	206.84
4	27.58	40	275.80
5	34.47	50	344.70
6	41.36	60	413.64
7	48.26	70	482.58
8	55.15	80	551.52
9	62.05	90	620.46
10	68.95	100	689.48

Unit Conversions

FAHRENHEIT TO CELSIUS (Centigrade) CONVERSION TABLE
(DEGREES F - 32°) ÷ 1.8 = DEGREES C

deg F	deg C	deg F	deg C	deg F	deg C	deg F	deg C
1	-17.2	51	10.6	101	38.3	151	66.1
2	-16.7	52	11.1	102	38.9	152	66.7
3	-16.1	53	11.7	103	39.4	153	67.2
4	-15.6	54	12.2	104	40.0	154	67.8
5	-15.0	55	12.8	105	40.6	155	68.3
6	-14.4	56	13.3	106	41.1	156	68.9
7	-13.9	57	13.9	107	41.7	157	69.4
8	-13.3	58	14.4	108	42.2	158	70.0
9	-12.8	59	15.0	109	42.8	159	70.6
10	-12.2	60	15.6	110	43.3	160	71.1
11	-11.7	61	16.1	111	43.9	161	71.7
12	-11.1	62	16.7	112	44.4	162	72.2
13	-10.6	63	17.2	113	45.0	163	72.8
14	-10.0	64	17.8	114	45.6	164	73.3
15	-9.4	65	18.3	115	46.1	165	73.9
16	-8.9	66	18.9	116	46.7	166	74.4
17	-8.3	67	19.4	117	47.2	167	75.0
18	-7.8	68	20.0	118	47.8	168	75.6
19	-7.2	69	20.6	119	48.3	169	76.1
20	-6.7	70	21.1	120	48.9	170	76.7
21	-6.1	71	21.7	121	49.4	171	77.2
22	-5.6	72	22.2	122	50.0	172	77.8
23	-5.0	73	22.8	123	50.6	173	78.3
24	-4.4	74	23.3	124	51.1	174	78.9
25	-3.9	75	23.9	125	51.7	175	79.4
26	-3.3	76	24.4	126	52.2	176	80.0
27	-2.8	77	25.0	127	52.8	177	80.6
28	-2.2	78	25.6	128	53.3	178	81.1
29	-1.7	79	26.1	129	53.9	179	81.7
30	-1.1	80	26.7	130	54.4	180	82.2
31	-0.6	81	27.2	131	55.0	181	82.8
32	0.0	82	27.8	132	55.6	182	83.3
33	0.6	83	28.3	133	56.1	183	83.9
34	1.1	84	28.9	134	56.7	184	84.4
35	1.7	85	29.4	135	57.2	185	85.0
36	2.2	86	30.0	136	57.8	186	85.6
37	2.7	87	30.6	137	58.3	187	86.1
38	3.3	88	31.1	138	58.9	188	86.7
39	3.9	89	31.7	139	59.4	189	87.2
40	4.4	90	32.2	140	60.0	190	87.8
41	5.0	91	32.8	141	60.6	191	88.3
42	5.6	92	33.3	142	61.1	192	88.9
43	6.1	93	33.9	143	61.7	193	89.4
44	6.7	94	34.4	144	62.2	194	90.0
45	7.2	95	35.0	145	62.8	195	90.6
46	7.8	96	35.6	146	63.3	196	91.1
47	8.3	97	36.1	147	63.9	197	91.7
48	8.9	98	36.7	148	64.4	198	92.2
49	9.4	99	37.2	149	65.0	199	92.8
50	10.0	100	37.8	150	65.5	200	93.3

Unit Conversions

MILES PER HOUR TO KILOMETERS PER HOUR CONVERSION TABLE
1 MPH = 1.609 KM/H

MPH	KM/H	MPH	KM/H	MPH	KM/H
0.1	0.16	1	1.61	10	16.09
0.2	0.32	2	3.22	20	32.19
.03	0.48	3	4.83	30	48.28
0.4	0.64	4	6.44	40	64.37
0.5	0.80	5	8.05	50	80.47
0.6	0.97	6	9.66	60	96.56
0.7	1.13	7	11.27	70	112.65
0.8	1.29	8	12.87	80	128.75
0.9	1.45	9	14.48	90	144.84
1.0	1.61	10	16.09	100	160.93

U.S. GALLONS TO LITERS CONVERSION TABLE
1 U.S. GALLON = 3.785 LITERS

GAL	LITER	GAL	LITER	GAL	LITER	GAL	LITER
0.1	0.38	1	3.79	10	37.85	100	378.54
0.2	0.76	2	7.57	20	75.71	200	757.08
0.3	1.14	3	11.36	30	113.56	300	1,135.62
0.4	1.51	4	15.14	40	151.42	400	1,514.16
0.5	1.89	5	18.93	50	189.27	500	1,892.71
0.6	2.27	6	22.71	60	227.12	600	2,271.25
0.7	2.65	7	26.50	70	264.98	700	2,649.79
0.8	3.03	8	30.28	80	302.83	800	3,028.33
0.9	3.41	9	34.07	90	340.69	900	3,406.87
1.0	3.79	10	37.85	100	378.54	1,000	3,785.41

Glossary

Actuator: A linear ball screw jack which is used to extend and retract the Shadowboard. It has an attached Potentiometer, which is used to indicate the Shadowboard position.

Alpha: Alphabetic, normally using the letters of the alphabet, A through Z.

Alphanumeric: A character set that contains both letters (A-Z) and digits (0-9). Other characters, such as punctuation marks, may also be allowed.

Alt: The Alt (Alternate) keys, located on either end of the space bar on the keyboard.

Analog: Pertaining to data in the form of continuously variable physical quantities. This is in contrast with Digital.

Analog-to-Digital Converter: A device which translates variable voltage Output (from potentiometers, variable transformers, etc.) to Digital numbers, for use by the computer.

ANSI: (pronounced “An-See”) American National Standards Institute. One of several organizations that develop standards for the electronics and computer industries.

AREA: American Railway Engineering Association.

Arrow Keys: Another name for the Cursor keys Left, Right, Up and Down, which are marked by arrows on the keyboard.

ASCII: (pronounced “Ass-Key”) American Standard Code for Information Interchange. One of the few genuine standards in the microcomputer world. This code assigns Binary (on/off) values to the characters used in transmitting and receiving information.

ASCII character: A 1-byte character from the ASCII character set, including alphabetic and Numeric characters, punctuation symbols, and various graphic characters.

Auto Mode: Another name for the Line Track mode.

Auto Run-In/Out: The automatic ramping of the line when beginning or ending lining, to minimize or eliminate starting and ending Throws.

AUTOEXEC.BAT: A special Batch File that DOS will execute upon starting. It contains any number of DOS commands, which are automatically executed.

Average Fit: A type of Best Fit which only smooths the recorded data points, making to attempt to find a true curve. Useful in bad track such as yards or where Throws must be minimized.

Glossary

B: (Bridge) A Fixed Point representing a Bridge, marked by pressing the letter "B".

Backplane: A main board, without CPU, into which all Boards including the System Board are inserted.

Backspace: Pressing the Backspace key. Moves the text from the Cursor position on to the left, erasing the character to the left. Used to correct mistakes while typing.

Backup: The process of duplicating a disk or file onto a separate disk. Good insurance against loss of the original.

Batch File: A file that contains a series of commands DOS executes when the file is called (run). Batch files have a BAT extension.

Best Fit: The Best Fit which will be used in Lining the track.

Bias: Force or Reference against, as in Bias Rail.

Bias Rail: The Rail used for Reference in all measurements, usually the outside rail of a Curve.

Binary: Refers to the computer numbering system consisting of two numerals, 0 and 1.

BIOS: (Basic Input/Output System). The part of the Operating system that handles the communications between the computer and its Peripherals. These programs are often burned into Read-Only Memory (ROM) chips.

Bit: Binary digit. A bit is represented logically by 0 or 1 and electrically by 0 volts (low condition) and (typically) 5 volts (high condition). Other ways are available to physically represent Binary digits (tones, different voltages, lights, etc.), but the logic is always the same.

Body: When applied to curves, the main portion of the Curve which has approximately equal curvature and Radius.

Boot: To load a program into the Computer. The term comes from "bootstrap", which in turn comes from "pulling a boot on by the bootstrap". In simple terms, it means the computer is loading and starting an Operating system.

Bug: An error or defect in a program.

Build: To specify exact curve Transition point locations and Degree of curvature, for use in Lining, without measuring the track with the tamper ahead of time.

Byte: A collection of Bits that makes up a Character or other designation. Generally a byte is 8 data bits.

Glossary

Calcs: Another word for Calculations.

Calibration: The process of adjusting the values the system uses to measure and record curves. This also applies to calibrating any system, to form a standard for translation into a manner the computer, measuring systems and operator can understand.

Caps Lock: Pressing this key makes any letters typed capitals. It does not change non-Alpha keys to their shifted values; use the Shift key to do this.

Card: A printed Circuit Board that contains electronic components that form the entire circuit. Also called an adapter.

Cathode Ray Tube: A device that contains electrodes surrounded by a glass sphere/cylinder and that will display information by creating a beam of electrons that strike a phosphor coating inside the display unit.

Character: A single letter, number or symbol, which takes one Byte to specify.

Chip: Another name for an IC, or Integrated circuit. Derived from the "chip" of silicon contained within the IC. Chips are either housed in a plastic or ceramic carrier device with pins for making electrical connections.

Circuit: A complete electronic path.

Circuit Board: The collection of Circuits gathered together on a sheet of plastic, usually with all contacts made through a strip of pins. The circuit board is usually made by chemically etching metal-coated plastic.

Clock: The source of a Computer’s timing signals. Every operation of the CPU is synchronized by the clock.

CMOS: (Complementary Metal Oxide Semiconductor) A type of Chip design that requires very little power to operate. In an AT type of system, a batter-powered CMOS memory and clock Chip is used to store and maintain the clock setting and system Configuration information.

Command: An instruction that tells the Computer to start, stop or continue an operation.

COMMAND.COM: An Operating system file, which is loaded last when the Computer is booted. The command interpreter or user Interface and program loader portion of DOS.

Common: The ground or return path for an electrical signal.

Comparator Card: A Computer card which compares two voltages, and based on that comparison, outputs a signal to drive an Actuator or other device.

Glossary

Compound Curve: A curve which has more than one Body.

Computer: Device capable of accepting Data, applying prescribed processes to this data, and displaying the results or information produced.

Config: Configuration, used in describing or specifying information for the Computer. The calculation options, Calibration values and display selections are all saved in configuration files.

CONFIG.SYS: A file which may be created to tell DOS how to configure itself when the machine starts up. CONFIG.SYS can load Device drivers, set the number of DOS buffers, and so on.

Configuration: The form and Setup used for a particular piece of Hardware or Software.

Configuration File: A file kept by the Software to record various aspects of the Software's configuration, such as the printer it uses. CONFIG.SYS is the DOS configuration file. Console. The unit in your system from which you communicate to the Computer, such as the Keyboard.

Continuity: In electronics, an unbroken pathway. Testing for continuity normally means testing to find out whether a wire or other conductor is complete and unbroken (by measuring 0 ohms). A broken wire will show infinite resistance (or infinite ohms).

Controller: The electronics that control a device, such as a hard disk drive or Printer, and intermediate the passage of Data between the device and the Computer.

Controller Card: An adapter holding the control electronics for one or more devices such as floppy disks. Ordinarily, this adapter takes up one of the Computer's slots.

Coprocessor: Additional Computer processing unit designed to handle specific tasks in conjunction with the main or Central Processing Unit.

Copy: To make a copy of a Data or Curve data File. May be accomplished by using CLU.

Counter Card: A Computer Card used to count signals from the Distance Wheel, used in determining the location of the machine.

CPS: (Cycles Per Second) Usually expressed as "Hertz" (Hz). For printers, this also can mean Characters Per Second, which is used to measure the speed of a printer.

CPU: (Central Processing Unit) The Computer's Microprocessor Chip, the brains of the outfit. Typically, this is an IC using VLSI (very large scale integration) technology to pack several different functions into a small area. The most common electronic device in the CPU is the transistor, of which there are usually 30,000 to 1,000,000 or more.

Crash: A malfunction that brings work to a halt. A system crash is usually caused by a Software malfunction, and you ordinarily can restart the system by rebooting the machine.

Glossary

Crosslevel: The difference in height of one rail in relation to the other. Also distance, normally in inches, by which the outer rail in a curve is higher than the inner rail. Also known as Superelevation.

CRT: (Cathode Ray Tube) A term used to describe a television or Monitor screen tube.

CS: The Curve to Spiral point, where the curve ends and the spiral out of the curve begins.

Ctrl: The Ctrl (Control) keys, located at either end of the Alpha section of the Keyboard.

Cubic Spiral: A Transition curve used to smoothly change from Tangent to Curved track, or from different Radius Curved tracks. It varies from a straight track in proportion to the cube of the distance along the track.

Current: The flow of electrons through a conductor of electricity. Electrical current energy is measured in amperes, or amps.

Cursor: The small flashing mark, or highlighted word(s), that appears on the monitor screen to indicate the point at which any Input from the keyboard will be placed. Also using in describing the keys which move the cursor position, including the Arrow Keys, PgUp, Home, etc.

Cursor Keypad: The area of the Keyboard just to the right of the main typing area, which is used to move the Cursor.

Curve Stations: Areas marked along the railroad track at even distances, used in String-Lining or locating the track.

Curve: (1) On Graphs, refers to the recorded Shadowboard values. (2) Areas or railroad track which are curved, normally at a constant Radius or Degree of Curvature.

Data: Groups of facts that are processed into information. Data is a graphic or textual representation of facts, concepts, numbers, letters, symbols, or instructions used for communication or processing.

Data Disk: The disk which stores data. In the case of the Compu-Liner, this is the curve data or information. Normally used in drive B.

DC: Direct current, such as that provided by a Power supply or batteries.

DD: Double Density. In the case of 3-1/2" Floppy Disks, a 720 KB (0.72 MB) disk.

Default: An assumption the Computer makes when no other parameters are specified. The term is used in Software to describe any action the Computer or program takes on its own with embedded values.

Glossary

Degree of Curve: A measure of the curvature of a curve. Defined as the angle in degrees which a 100 foot chord makes to the center of the curve. Approximately equal to 5,730 divided by the Radius of the curve in feet.

Delete: Pressing the Del or Delete key on the Cursor keypad, or Numeric keypad if the NumLock light is Off. Deletes the Character at the Cursor location, and moves characters to the right over by one place.

Density: The amount of data that can be packed into a given area on a floppy disk. Usually used in Reference to High-Density or Double-Density disks and drives.

Device Driver: A memory-resident program, loaded by CONFIG.SYS, that controls an unusual device, such as expanded memory.

Diagnostics: Programs used to check the operation of a Computer system. These programs allow the operator to check the system for any problems and to indicate in what area the problem lies.

Differential: The difference between the Record and Lining Zeros. A result of electrical, mechanical and hydraulic overshoot and Calibration values.

Digital: Consisting of Digits and stored as bytes of Computer data, rather than continuously variable values. The opposite of Analog.

Digital-to-Analog Converter: A device which translates Digital numbers in the Computer to variable voltage signals, often for use with Comparator cards.

DIP: (Dual Inline Package) The plastic or ceramic carrier device that houses a Chip or other electrical device.

DIP Switch: A tiny switch (or group of switches) found on a Circuit board. Named for the form factor of the carrier device in which the switch is housed (DIP).

Directory: An area of a disk that stores the titles given to the files saved on the disk. The directory serves as a “table of contents” for the files saved on the disk. The directory contains data that identifies the name of the file, the size, the attributes (system, hidden, read-only, etc.), the date and time of creation, and a pointer to the location of the file. You may see a directory of the current disk by typing ‘DIR’ at the DOS prompt.

Disk: Normally the same as Diskette.

Disk Operating System: (DOS) A collection of programs stored on the DOS disk. These programs contain routines that allow the system and user to manage information and the Hardware resources of the Computer. A DOS must be loaded into the Computer before you start other programs.

Glossary

Diskcopy: A means of making a backup copy of a disk. Normally, CLU or Main Menu should be used to make copies of disks.

Diskette: A floppy disk. The disk is made of a flexible material that is coated with magnetic substance. The disk spins inside its protective jacket, and the read/write head comes almost in contact with the recording Surface to read or write data.

Distance Wheel: An additional non-powered wheel riding on the rail and used to measure distance traveled.

DOS: (Disk Operating System) A collection of programs stored on the DOS disk. These programs contain routines that allow the system and user to manage information and the Hardware resources of the Computer. A DOS must be loaded into the Computer before you start other programs.

Down: Pressing the Down Arrow Key on the Cursor keypad, or Numeric keypad if the NumLock light is Off.

Drive: A mechanical device that manipulates data storage media, like a Disk drive.

Drop-Down Menu: A sub-menu which drops down from a higher level Menu. Used to simplify the operation by reducing the number of selections available at any given time.

Easement: A Transition curve used to smoothly change from Tangent to Curved track, or from different Radius Curved tracks.

Edit: The process of rearranging or changing Data or information.

EGA: (Enhanced Graphics Adapter) A high resolution color display with 640 by 350 Pixels.

Encoder: A system which translates (encodes) one type of information to another. The Encoder is located on the Distance Wheel and translates revolutions and direction into electronic signals which it sends to the 68030 Card.

End: Pressing the End key on the Cursor keypad, or Numeric keypad if the NumLock light is Off. Usually moves the Cursor to the last of any list of items.

EPROM: (Erasable Programmable Read-Only Memory) A type of Read-Only Memory (ROM) where the data pattern may be erased to allow a new pattern. EPROMs are usually erased by ultraviolet light and recorded by a higher than normal voltage programming signal.

Erase: To delete a data or curve data file. May be accomplished by using CLU.

Error Message: A word or combination of words to indicate to the user that an error occurred while the program was operating.

Glossary

Esc: The Escape key, in the upper left of the Keyboard. Often used to escape out of Menus and other procedures.

Est Time: On the Line Track screen, indicates the estimated time to complete lining the curve, in hours and minutes.

Exit: To exit or quit what you are currently doing. It may apply to a procedure within the program or the program itself, depending on the operation.

Extension: The distance by which the Shadowboard is extended past its normal zero value (used for straight track).

File: A collection of information that is kept somewhere other than in the Random-access memory, usually on disks.

File Name: The name given to the disk file. Must be one to eight characters long and may be followed by a file name extension, which can be one to three characters long. A file name can be made up of any combination of letters and numbers but should be descriptive of the information contained on the file.

FileName: A curve or data file name, corresponding to the DOS rules for naming files. The same as FileName.

Fit: The Best Fit which will be used in Lining the track.

Fixed Disk: Referred to also as a hard disk. A disk that cannot be removed from its controlling Hardware or housing.

Fixed Point: An area along the track which is Fixed, and cannot normally be moved. Examples are switches, crossings and bridges, which are normally located during the Recording process. When Fixed Points are specified, the Best Fit will automatically line into and out of them.

Floppy Disk: Same as Diskette.

Form Feed: A button on the Printer which causes the paper to advance forward one sheet.

Format: To prepare a Disk by Formatting. Also can mean the form which data is stored in.

Formatting: Preparing a Disk so that the Computer can read or write to it. Formatting checks the disk for defects and constructs an organizational system to manage information on the disk.

FPU: (Floating Point Unit) Another name for the Math Coprocessor.

Frame Ground: An electrical ground which is firmly connected to the physical frame of the machine.

Glossary

Function Keys: Special-purpose keys that can be programmed to perform various operations. These keys serve many different functions depending on the program being used.

G: (General or Generic) A Fixed Point representing any other type of fixed point, marked by pressing the letter "G".

Gauge Rail: The low rail on a curve, opposite the Line or Bias Rail.

Graph: Any of the Output of the Recording process shown on screen in graphical form, including the recorded Curve, Best Fit, Superelevation, etc.

Graph Offset: A distance resulting from the use of a Non-Symmetrical measuring system which changes the apparent location of the resulting Graph.

Hard Disk: Also referred to as a Fixed Disk. A disk that cannot be removed from its controlling Hardware or housing.

Hardware: Physical components that make up a Microcomputer, Monitor, Printer, etc.

HD: (High Density) In the case of 3-1/2" Floppy Disks, a 1.44 MB disk.

Highlight: The brighter or different-colored selection, usually in Menus and information tables, which designates the current Cursor position.

Home: Pressing the Home key on the Cursor keypad, or Numeric keypad if the NumLock light is Off. Usually moves the Cursor to the first of any list of items.

IC: (Integrated Circuit) A device which contains many electronic components such as transistors, to accomplish many functions in a small space.

I/O: (Input/Output) A circuit path that allows independent communications between the processor and external devices.

I/O Card: A Computer card used to send and Receiver information between the Computer and its peripherals.

Inclinometer: A miniature level which gives an electrical Output proportional to its angle, or inclination: Used to measure and set Crosslevel or Superelevation.

Input: Data sent to the Computer from the Keyboard, disk drives and other devices.

Input-Output: (I/O) A Card or device used to both receive (Input) information from external sources and send Output) information to external sources.

Glossary

Insert: Pressing the Ins or Insert key on the Cursor keypad, or Numeric keypad if the NumLock light is Off. Sometimes toggles between Over-typing or Inserting text while typing.

Integrated Circuit: (IC) A device which contains many electronic components such as transistors, to accomplish many functions in a small space.

Interface: A communications device that allows one device to communicate with another. The interface matches the Output of one device to the Input of the other device.

Keyboard: The typewriter-like device used to type information and make selections during the program.

Kilobyte: (or KB) A unit of information storage. One kilobyte equals 1,024 bytes.

Left: Pressing the Left arrow key on the Cursor keypad, or Numeric keypad if the NumLock light is Off.

Line: To position the track to a specified position, or line, in order to improve and correct defects.

Line Rail: The high or Bias Rail on a curve, opposite the Gauge Rail.

Linear Actuator: A linear ball screw jack which is used to extend and retract the Shadowboard: It has an attached potentiometer, which is used to indicate the Shadowboard position.

Lining: The process of positioning the track side-to-side to previously calculated values during tamping.

Lining Zero: The value in digits required to continue to line exactly straight track, without drifting left or right.

Load: To retrieve Curve Data or other information from a Disk and place into Computer memory for display and calculation.

LVDT: (Linear Variable Displacement Transducer) A device used to measure linear movement. It Outputs a voltage which is proportional to the linear displacement.

Machine Length: The overall length of the lining and surfacing system, from the Projector to the Receiver, normally in feet.

Main Menu Bar: The main horizontal Menu from which all other menus and selections are made.

Glossary

Manual SB: A means of manually positioning the Shadowboard, extending and retracting, to whatever position is desired.

Mark VI: The MK IV Tamper uses the Jupiter system for control of the machine operations, including control of tamping, surfacing, lining and tie finding.

Math Coprocessor: Also called Floating Point Unit (FPU). A special Chip which does more complex mathematical functions in one step, rather than the many steps normally required. A Computer can really only add and subtract. It just adds and subtracts many times in many ways to do multiplication, division and other functions. The FPU has these functions built-in, and does them up to fifty times faster than would be possible without it.

Megabyte: (or MB) A unit of information storage. One megabyte equals 1,024 Kilobytes, which equals 1,048,576 Bytes.

Memory: Any component in a Computer system that stores information for future use.

Menu: A selection table or listing, from which you can make the desired selection

Menu Software: Utility MENU SOFTWARE. UTILITY Software that makes a Computer easier to use by replacing DOS commands with a series of Menu selections.

Menu Tree: A diagram showing the various Menu selections and their connection with each other.

MHz: (Megahertz) A measurement of millions of cycles per second, often used to measure the clock speed of CPUs.

Microprocessor: A solid state Central Processing Unit that is much like a Computer on a Chip. It is an Integrated Circuit that accepts coded instructions for execution.

Monitor: The LCD or TV-like screen used to view (or monitor) Computer programs.

Motherboard: The main Circuit board in the Computer, which contains the CPU and other circuits, as well as the slots into which Interface Cards are inserted.

NEWCURVE: The name automatically assigned to any curve which is Built or Recorded, before it is Saved. It will change to the saved name, once saved.

Non-Symmetrical: Different in size or shape on either side. A normal tamper lining system, with a large distance between the Projector and the Shadowboard and a much smaller distance between the Shadowboard and the Receiver is an example a Non-Symmetrical measuring system. The opposite of Symmetrical.

Glossary

Numeric: Numbers, in combinations using Digits from 0 through 9.

Numeric Keypad: The area of the Keyboard to the extreme right, which may be used to type numbers (if the NumLock key is lit) or to move using the Cursor keys.

Offset: The measurement of the distance between the Bias Rail and the chord produced by the leading and trailing points of a Three-Point Lining system.

On Line: A light and button on the printer which indicates the readiness state of the printer. When it is On Line, it is ready to Receive information to print.

Operating System: Collection of programs for operating the Computer. Operating systems perform housekeeping tasks such as Input/Output between the Computer and Peripherals and accepting and interpreting information from the Keyboard.

Output: Information or the act of sending the information processed by the Computer to a mass storage device such as a video display, a Printer or Disk drive.

Overwrite: To write Data on top of existing data, erasing the original data.

Parallel Printer Port: A special large connection port, to which the cable from the printer attaches. A parallel cable transmits many bits of information at the same time, as opposed to a Serial cable, which can only transmit one Byte of information at a time.

Passive Backplane: Another name for the Backplane, into which all boards including the System Board are inserted. Passive indicates that it performs no functions itself, but rather acts as a bus to connect and provide power to all the boards.

Peripheral: Any piece of equipment used in Computer systems that is an attachment to the Computer itself. Disk drives, terminals, and Printers are all examples of peripherals.

PgDn: (Page Down) Pressing the PgDn key in the Cursor keypad to the right of the main typing area, or on the Numeric keypad. Usually moves information on screen one screen, or page, at a time.

PgUp: (Page Up) Pressing the PgUp key in the Cursor keypad to the right of the main typing area, or on the Numeric keypad. Usually moves information on screen one screen, or page, at a time.

Pixel: From Picture Element. The smallest dot displayed in any particular graphics resolution.

Port: Plug or socket that allows an external device such as a Printer to be attached to the adapter Card in the Computer.

Glossary

POST: (Power-On Self Test) A series of tests run by the Computer at power on. When power is initially applied, the Computer will automatically scan and test many of its circuits and sound a beep from the internal speaker if this initial test indicates proper system performance.

Potentiometer: A variable resistor which is used to indicate the position of the Shadowboard. Also called a Pot.

Power Supply: Electrical/electronic circuit that supplies all operating voltage and current to the Computer system.

Print Screen: The key used to print a copy of whatever is currently on the screen to the Printer. Note that Print Screen does not work while in the main Compu-Liner program and is disabled.

Printer: The device used to make hardcopy, or printed reports or copies of Computer information.

Processor Speed: The clock rate at which a Microprocessor processes data.

Program: Set of instructions or steps telling the Computer how to handle a problem or task.

Projector: A special light source and lens system which projects a concentrated light beam of a particular frequency, used in Lining and Surfacing.

Proprietary: Anything that is invented by a company and not used by any other company. Proprietary is the opposite of Standard.

PT: (Point of Tangent) The location where the Tangent track meets the curved track. The TS and ST points are also PT points.

Pulses: Intermittent transmissions of electrical voltage or current used to transmit information. Quit. To leave a program or mode (such as Record). The program or mode will have to be restarted after Quitting.

QWERTY: The name given to the standard alphabetic Keyboard layout, derived from the key order starting at the upper left of the keyboard.

Radius: The measurement from any point on a curve to the center of the curve. Normally in the United States we measure curves in Degree of curve, rather than Radius.

Ramping: The smooth increasing and decreasing of Superelevation during spirals.

Random-Access Memory: (RAM) All memory accessible at any instant (randomly) by the Microprocessor.

Glossary

Read-Only Memory: (ROM) A type of memory that has values permanently burned in. These locations are used to hold important programs or data that must be available to the Computer when the power is first turned on.

Read-Only File: A file in which a setting has been made in the attribute Byte of its Directory listing so that DOS will not allow Software to write into or over the file.

Read/Write Head: A tiny electromagnetic device that reads and writes Data on a Disk track.

Record Zero: The value in Digits which the system Outputs when the lining system is running on exactly straight track.

Receiver: A special light sensor which receives the light beam from the Projector, used in lining and surfacing.

Record: To travel the machine over a length of track while recording various information for later use.

Reference: The basis used for measurement. Also used to specify the hand of curve, left or right.

Resolution: A reference to the size of the Pixels used in graphics. In medium-resolution graphics, pixels are large. In high-resolution graphics, pixels are small.

Reverse Video: Letters displayed on screen or printout in reverse colors to the majority of the screen. This is often used to locate the Cursor position.

Right: Pressing the Right arrow key on the Cursor keypad, or Numeric keypad if the NumLock light is Off.

ROM: (Read-Only Memory) A type of memory that has values permanently burned in. These locations are used to hold important programs or data that must be available to the Computer when the power is first turned on.

ROM BIOS: (Read-Only Memory Basic Input/Output System) A BIOS that is encoded in a form of read-only memory for protection. This is often applied to important start-up programs that must be present in a system for it to operate.

Root Directory: The main Directory of any Hard disk or Floppy disk created upon Formatting the disk. If the disk has other Subdirectories, being in the root Directory means not being in any subdirectory.

Glossary

Routine: Set of instructions that are used frequently. May be considered as a subdivision of a program with two or more instructions that are functionally related.

Run-In: To smoothly begin lining with zero throws and Transition to the normal Throws required in Lining and correcting track.

Run-Out: To smoothly Transition from the normal Throws required in Lining and correcting track, to zero throws at the area not tamped.

RVDT: (Rotary Variable Displacement Transducer) A device used to measure angular movement. It outputs a voltage which is proportional to the angular displacement.

S: (Switch) A Fixed point representing a Switch, marked by pressing the letter "S".

Save: To place curve Data or other information on a Disk for permanent storage (information in memory is lost when the Computer is turned off).

SC: The Spiral to Curve point, where the Spiral into a curve ends, and the curve begins.

Select: To choose, usually be moving the Cursor (Highlight) to the desired position and pressing Enter, or by pressing a corresponding Highlighted key and pressing Enter.

Sensitivity: A factor useful in determining the exact operation of the Best Fit routine, especially in finding Compound curves and errors.

Setup: To go through a procedure to set in the manner required, as in Inclinometer Setup.

Shadowboard: The movable thin steel plate used to cut the light beam between the Projector and the Receiver, used in lining and surfacing. Usually controlled by the Actuator motor.

Shell: The generic name of any user Interface Software. COMMAND.COM is the standard shell for DOS. Also used to mean to exit temporarily from a program, while keeping the program and Data in Memory.

Shift: (1) The Shift keys, located at either end of the Alpha section of the Keyboard. Gives the shifted values for characters (i.e. capital ‘A’ for ‘a’, and ‘?’ for ‘/’). (2) A manual correction of the Shadowboard position, commonly used in run-out or to make Shifts in the final track location.

Software: A series of instructions loaded into the Computer that tells the Computer how to accomplish a problem or task.

Solid State Relay: (SSR) Electrical relays which have no moving parts, used in positioning the Shadowboard and other tasks.

Glossary

Source Disk: A Disk that contains information that is to be copied onto another disk.

Spiral: A Transition curve used to smoothly change from Tangent to Curved track, or from different Radius Curved tracks.

Spiral Out: The Spiral exiting a curve into Tangent track.

Spiral In: The Spiral entering a curve from Tangent track.

ST: The Spiral to Tangent point, where the spiral out of the curve ends, and the Tangent track begins.

Storage: Device or medium onto or into which data can be entered, held and retrieved at a later time. Synonymous with Memory.

String: (1) A sequence of Characters or something which is typed. (2) A cord or line used in String-lining.

String-Lining: The method of using a String, usually 62 feet long, to measure and/or line track.

Subdirectory: A Directory listed inside another directory.

Super: An abbreviated form of Superelevation or Crosslevel.

Super Before: The original Superelevation or Crosslevel, before tamping, which is recorded during the Record process.

Super Desired: The required, or desired, Superelevation, to which you want to Surface the track.

Superelevation: The distance, normally in inches, by which the outer rail in a curve is higher than the inner rail. Also known as Crosslevel.

Surface: To lift the track to a specified position for lift and Crosslevel, in order to improve and correct defects.

Symmetrical: The same in size or shape on either side. A 62 foot long String with a center measuring point is an example of a Symmetrical measuring system. The opposite of Non-Symmetrical.

System Board: The Circuit board containing the main Computer CPU. It may be a Motherboard, into which other boards are inserted, or may itself insert into a Passive Backplane, along with the other boards.

Glossary

System Files: The two DOS files IO.SYS and MSDOS.SYS are the system files. A third file, COMMAND.COM, is the Shell. The system files are hidden on the disk.

Tangent: Straight track, named because it should normally be tangent to the curves it contacts.

Target: The disk which will become the copy of the information located on the Source disk.

Three-Point Lining: The system of using a light beam or wire to determine the chordal Offset and curvature of track.

Throws: The absolute movement of the track, relative to a fixed object such as a stake, from before the tamper arrives until after it leaves.

Transition: A curve used to smoothly change from Tangent to Curved track, or between Radius Curved tracks.

Transition Curve: An Easement curve used to smoothly change from Tangent to Curved track, or from different Radius Curved tracks.

Transition Point: In displaying and describing curves, a point or distance where the curvature begins to change (or transitions), such as the Tangent-Spiral or Spiral-Curve points.

TS: The Tangent to Spiral point, where the spiral into a Curve begins and the Tangent ends.

TSR: (Terminate and Stay Resident) A program that remains in memory after it loads. Also called a memory-resident program.

Up: Pressing the Up Arrow key on the Cursor keypad, or Numeric keypad if the NumLock light is Off.

Update: To modify information already contained in a File or program with current information.

Utility: Programs that carry out routine procedures to make Computer use easier.

Wiggle Timer: Allows the workheads to penetrate compacted ballast by alternately squeezing the paddles in and out as the workheads goes down into the ballast. The wiggle timer determines the amount of time before wiggling will begin. The default wiggle time is 1 second. The operator can adjust this time from 0.5 to 1.5 seconds using the increment or decrement buttons as appropriate.

VGA: (Video Graphics Array) A high resolution color display with 640 by 480 Pixels.

VME: A special Computer bus used in industrial computer systems such as that used on the Mark VI.

Glossary

Volume Label: An identifier or name of up to 11 characters that names a Disk.

Work: To Record or Line track.

Worked: On the Line Track screen, indicates the percent of the Curve which has been completed.

Worktime: On the Line Track screen, indicates the time elapsed since Lining was begun in hours and minutes.

X-Crossing. A Fixed point representing a Crossing, marked by pressing the letter ‘X’.

X-lvl Correction: A triangulating calculation done during Lining to reduce or eliminate the effects caused by errors in Crosslevel, particularly at the Projector. Also reduces errors caused by large changes in the desired crosslevel.

Zero Tangents: A modification to the Best Fit which forces the fits which occur near zero to be exactly at zero.

CHAPTER 10
MAINTENANCE

CHAPTER 10 - MAINTENANCE
TABLE OF CONTENTS

10.1 Waste Disposal . . . . . 10 - 3
10.2 Before Performing Maintenance . . . . . 10 - 3
10.3 Recommended Maintenance Schedule . . . . . 10 - 4
10.4 Lubrication . . . . . 10 - 7
10.4.1 Lubrication Procedure . . . . . 10 - 7
10.4.2 Service Chart . . . . . 10 - 10
10.4.3 Service Plaque . . . . . 10 - 11
10.5 Engine / Pump Drive . . . . . 10 - 12
10.5.1 Engine . . . . . 10 - 13
10.5.2 Engine Oil . . . . . 10 - 13
10.5.3 Engine Air Cleaner . . . . . 10 - 13
10.5.4 Engine Coolant / Radiator . . . . . 10 - 14
10.5.5 Engine Fuel Filters . . . . . 10 - 15
10.5.6 Pump Drive . . . . . 10 - 16
10.5.7 Pump Drive Lube . . . . . 10 - 16
10.6 Fuel System . . . . . 10 - 18
10.6.1 Fuel System . . . . . 10 - 18
10.6.2 Fuel Tank . . . . . 10 - 18
10.6.3 Remote Fuel Filter Option . . . . . 10 - 18
10.7 Drive Axles / Transmissions . . . . . 10 - 20
10.7.1 Front Drive Axle . . . . . 10 - 20
10.7.2 Front Drive Axle Lube . . . . . 10 - 20
10.7.3 Front Drive Axle Remote Lube Option . . . . . 10 - 20
10.7.4 Rear Drive Axle . . . . . 10 - 22
10.7.5 Rear Drive Axle Lube . . . . . 10 - 22
10.7.6 Transmissions . . . . . 10 - 23
10.7.7 Transmissions Lube . . . . . 10 - 23
10.8 Workheads . . . . . 10 - 24
10.8.1 Workheads Traverse . . . . . 10 - 24
10.8.2 Workheads Traverse Lube . . . . . 10 - 24
10.8.3 Workheads . . . . . 10 - 26
10.8.4 Workheads Lube . . . . . 10 - 26
10.8.5 Workheads Remote Lube Option . . . . . 10 - 26
10.8.6 Workheads Auto Oilers Option . . . . . 10 - 26
10.8.7 Vibrators . . . . . 10 - 28
10.8.8 Vibrators Lube . . . . . 10 - 28
10.9 Combo Clamps . . . . . 10 - 30
10.9.1 Combo Clamps . . . . . 10 - 30
10.9.2 Combo Clamps Lube . . . . . 10 - 30
10.9.3 Combo Clamps Auto Oilers Option . . . . . 10 - 30
10.10 Auto Oilers Option . . . . . 10 - 32
10.10.1 Auto Oilers Option . . . . . 10 - 32
10.10.2 Workhead Auto Oilers Option . . . . . 10 - 32
10.10.3 Combo Clamp Auto Oilers Option . . . . . 10 - 32
10.10.4 Auto Oilers Adjustment . . . . . 10 - 33

CHAPTER 10 - MAINTENANCE
TABLE OF CONTENTS

10.11 Lining System . . . . . 10 - 34
10.11.1 Shadowboard . . . . . 10 - 34
10.11.2 Shadowboard Lube . . . . . 10 - 34
10.11.3 Liner Flags Lube . . . . . 10 - 34
10.12 Surfacing System . . . . . 10 - 36
10.12.1 Surfacing Receivers . . . . . 10 - 36
10.12.2 Surfacing Receivers Lube . . . . . 10 - 36
10.13 Hydraulic System . . . . . 10 - 39
10.13.1 Hydraulic System . . . . . 10 - 40
10.13.2 Hydraulic System Depressurizing . . . . . 10 - 40
10.13.3 Hydraulic Fluid Specifications . . . . . 10 - 41
10.13.4 Hydraulic Reservoir . . . . . 10 - 42
10.13.5 Hydraulic Reservoir Fluid Level . . . . . 10 - 42
10.13.6 Electric Fill Pump Option . . . . . 10 - 44
10.13.7 Hydraulic Fluid Sample Valve Option . . . . . 10 - 44
10.13.8 Hydraulic Oil Cooler . . . . . 10 - 45
10.13.9 Hydraulic Reservoir Filters . . . . . 10 - 46
10.13.10 Hydraulic Pressure Filters Option . . . . . 10 - 48
10.13.11 Hydraulic Test Valves / Sensor Option . . . . . 10 - 48
10.14 Pneumatic System . . . . . 10 - 50
10.14.1 Air System Depressurizing . . . . . 10 - 50
10.14.2 Air System Draining . . . . . 10 - 50
10.14.3 Air System Filter . . . . . 10 - 51
10.14.4 Air Dryer / Purge Tank . . . . . 10 - 52
10.14.5 Air Compressor . . . . . 10 - 53
10.15 Welding Pre-Cautions . . . . . 10 - 54
10.15.1 Cummins Tier III Engine . . . . . 10 - 54
10.16 Batteries . . . . . 10 - 55
10.16.1 Battery Maintenance . . . . . 10 - 55
10.16.2 Battery Replacement . . . . . 10 - 56
10.16.3 Battery Charging . . . . . 10 - 57
10.16.4 Battery Jumping . . . . . 10 - 57
10.16.5 Battery Cables Connect / Disconnect . . . . . 10 - 58
10.17 Hoses and Fittings . . . . . 10 - 60
10.17.1 Inspection, Maintenance, Replacement and Installation . . . . . 10 - 60
10.17.2 Hose Band . . . . . 10 - 61
10.18 Fluid Drains . . . . . 10 - 62
10.18.1 Fluid Drains . . . . . 10 - 62
10.18.2 Remote Fluid Drains . . . . . 10 - 63
10.19 Cab Air Conditioner / Pressurizer . . . . . 10 - 64
10.19.1 Cab Air Conditioner / Pressurizer Maintenance . . . . . 10 - 64
10.20 Bolt Torque Requirements . . . . . 10 - 66
10.21 Brake Actuators . . . . . 10 - 67
10.22 Cleaning Machine . . . . . 10 - 68

10.1 Waste Disposal

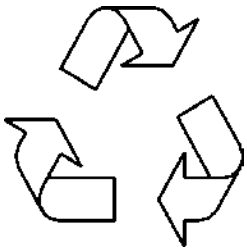

1. Dispose of waste properly. Improper disposal of waste can threaten the environment. The operation and maintenance of Harsco Rail equipment may involve the use and disposal of such items as hydraulic fluid, engine oil, coolant, filters, batteries, etc.

2. Use leak-proof containers when draining fluids. Do not pour waste onto the ground, down a drain, or into any water source. Inquire on the proper way to recycle or dispose of waste according to applicable Federal, State and/or Local regulations.

10.2 Before Performing Maintenance

- **REFER TO ENERGY CONTROL PROCEDURE TO REMOVE ALL ENERGY SOURCES FROM MACHINE BEFORE PERFORMING MAINTENANCE, OR MAKING ADJUSTMENTS OR REPAIRS TO MACHINE.**

- **BE AWARE OF ALL PINCH POINTS AND KEEP ALL PARTS OF BODY AWAY.**

  FAILURE TO HEED THESE WARNINGS COULD RESULT IN SEVERE BODILY INJURY.

1. Make sure the machine is in a safe location for the maintenance being performed.

2. Make sure the maintenance personnel are qualified to perform the maintenance procedures.

3. Make sure the machine's brakes are applied. Chock the machine wheels, if required. Make sure unintended movement of the machine cannot occur.

4. Make sure all components are raised and locked in the travel (stored) position.

5. Refer to Energy Control Procedure to remove all energy sources from machine before performing maintenance, or making adjustments or repairs to the machine. See General Information - Energy Control Procedure.

10.3 Recommended Maintenance Schedule

Note: Change all hydraulic filters after first 100 hours of operation. Thereafter, change filters according to the Recommended Maintenance Schedule.

RECOMMENDED MAINTENANCE SCHEDULE		OPERATING HOURLY INTERVALS					
CHECK, INSPECT OR CHANGE THE FOLLOWING		See Note	10	50	200	500	1000 Other
1	Engine Oil (check level, fill)	(1)	10				
2	Engine Coolant (check level, fill)	(1)	10				
3	Engine Maintenance Schedule	(1)	10				
4	Engine Air Cleaner (squeeze rubber dust unload valve with engine stopped) (check indicator with engine operating) (change elements if red)		10				
5	Air / Hydraulic Hoses (inspect per SAE J1273)		10				
6	Electrical Cables (check for wear, fraying)		10				
7	Bolts and Nuts (check for loose or missing)		10				
8	Machine (check for worn, damaged or missing parts, components, etc.)		10				
9	Air Reservoirs (two) (drain moisture) (main and purge)		10				
10	Brake Shoes (four) (check for wear, missing)		10				
11	Fuel Tank (check fuel level, fill)		10				
12	Hydraulic Reservoir (check fluid level, fill) (maintain level at 1/2 - 3/4 full in sight glass with all components raised and locked in Travel position)		10				
13	Hydraulic System Return Filters (two) (check indicators with engine operating) (change elements if red)		10				
14	Hydraulic System Pressure Filters (seven) (check indicators with engine operating) (change elements if red)		10				
15	Workhead Vibrators (four) (check oil level, fill)		10				

10.3 Recommended Maintenance Schedule

RECOMMENDED MAINTENANCE SCHEDULE		OPERATING HOURLY INTERVALS					
CHECK, INSPECT OR CHANGE THE FOLLOWING		See Note	10	50	200	500	1000 Other
16	Automatic Oilers (workheads and combo clamps) (check all guide rods for wetness) (adjust if necessary)	(2)	10				
17	Fire Extinguisher (check indicator)		10				
18	Lights (must be operational) (strobe, travel and work)		10				
19	Horn (must be operational)		10				
20	Lubricate Locations with 10 Hour Intervals		10				
21	Engine Maintenance Schedule	(1)		50			
22	Batteries (two) (check electrolyte level, fill)			50			
23	Brake Shoes (four) (1/8” max clearance)			50			
24	Workheads Traverse Chain (lubricate)			50			
25	Pump Drive (check lube level, fill)	(3)		50			
26	Axle Drive Transmissions (two) (check lube level, fill)	(3)		50			
27	Lubricate Locations with 50 Hour Intervals			50			
28	Engine Maintenance Schedule	(1)			200		
29	Engine Oil (change oil, filter)	(1)			200		
30	Engine Fuel Filters (two) (change elements)				200		
31	Remote Fuel Filter Option (one) (change element)				200		
32	Engine Air Cleaner (change element)	(4)			200		
33	Batteries (two) (clean clamps and terminals)				200		
34	Air System Filter (change element)				200		
35	Hydraulic System Return Filters (two) (change elements)	(4)			200		
36	Workheads Vibrators (four) (drain, flush, new oil)				200		
37	Lubricate Locations w/ 200 Hour Intervals				200		

10.3 Recommended Maintenance Schedule

RECOMMENDED MAINTENANCE SCHEDULE		OPERATING HOURLY INTERVALS					
CHECK, INSPECT OR CHANGE THE FOLLOWING		See Note	10	50	200	500	1000 Other
38	Engine Maintenance Schedule	(1)				500	
39	Air Dryer (change dessicant cartridge)					500	
40	Hydraulic Fluid (sample and test)					500	
41	Hydraulic System Pressure Filters (seven) (change elements)	(5)	10			500	
42	Pump Drive (drain, flush, new lube)					500	
43	Axle Drive Transmissions (two) (drain, flush, new lubel)					500	
44	Engine Maintenance Schedule	(1)					1000
45	Hydraulic Reservoir (drain, flush, new fluid)						1000
46	Hydraulic Suction Strainers (two) (clean)						1000
47	Hydraulic Reservoir Breather Filter (change)						1000
48	Hydraulic Reservoir Fill Pump Filters (change elements)						1000

Notes:
(1) Refer to Engine Operators Manual for engine maintenance procedures.
(2) Workhead and combo clamps guide rods must be wet but not dripping fluid on ground.
(3) Change after first 50 hours of operation. Thereafter, change accordingly to Maintenance Schedule.
(4) Change elements sooner if indicated to do so by indicator.
(5) Change elements sooner if indicated to do so by indicator or Jupiter Control System.

10.4 Lubrication

WARNING

- **REFER TO ENERGY CONTROL PROCEDURE TO REMOVE ALL ENERGY SOURCES FROM MACHINE BEFORE PERFORMING MAINTENANCE, OR MAKING ADJUSTMENTS OR REPAIRS TO MACHINE.**
- **BE AWARE OF ALL PINCH POINTS AND KEEP ALL PARTS OF BODY AWAY.**

FAILURE TO HEED THESE WARNINGS COULD RESULT IN SEVERE BODILY INJURY.

10.4.1 Lubrication Procedure

1. Refer to Energy Control Procedure to remove all energy sources from machine before performing maintenance, or making adjustments or repairs to the machine. See General Information - Energy Control Procedure.

10 Operating Hours - Daily

2. Check the engine oil level. If low, fill to the proper level. See Maintenance - Engine / Pump Drive and/or the Engine Manual.

3. Check the hydraulic reservoir fluid level. Maintain the level at 1/2 - 3/4 full in the sight glass with all of the machine components raised and locked in the Travel position. If low, fill to the proper level. See Maintenance - Hydraulic Reservoir Fluid Level.

4. Check the workhead vibrators oil level. If low, fill to the proper level. See Maintenance - Workheads.

5. Check the auto oilers operation by inspecting the workhead and combo clamps guide rods for wetness. The guide rods must be wet, but not so wet as to be dripping fluid onto the ground. If necessary, adjust the auto oilers. See Maintenance - Auto Oilers.

6. Lubricate all locations provided with grease fittings that require a 10 operating hour interval period. Wipe off the grease fittings before lubricating to help keep out dust, dirt, contaminants, etc. See Figure 10-1 - Service Chart and Figure 10-2 - Service Plaque for grease fitting locations, recommended lubricant and interval hours.

10.4 Lubrication

10.4.1 Lubrication Procedure

50 Operating Hours - Weekly

7. Clean and lubricate the workhead traverse drive chain. See Maintenance - Workheads.

8. Check the pump drive lubricant level. If low, fill to the proper operating level. See Maintenance - Engine / Pump Drive.

9. Check the front and rear axle drive transmissions lubricant level. If low, fill to the proper operating level. See Maintenance - Drive Axles / Transmissions.

10. Lubricate all locations provided with grease fittings that require a 50 operating hour interval period. Wipe off the grease fittings before lubricating to help keep out dust, dirt, contaminants, etc. See Figure 10-1 - Service Chart and Figure 10-2 - Service Plaque for grease fitting locations, recommended lubricant and interval hours.

200 Operating Hours - Monthly

11. Drain the engine oil and change the engine oil filter. Fill the engine crankcase with new, clean oil to the proper level. See Maintenance - Engine / Pump Drive and/or the Engine Manual.

12. Drain the workhead vibrators oil. Fill the vibrators with new, clean oil to the proper level. See Maintenance - Workheads.

13. Change the hydraulic system return filters. See Maintenance - Hydraulic Reservoir Filters.

14. Lubricate all locations provided with grease fittings that require a 50 operating hour interval period. Wipe off the grease fittings before lubricating to help keep out dust, dirt, contaminants, etc. See Figure 10-1 - Service Chart and Figure 10-2 - Service Plaque for grease fitting locations, recommended lubricant and interval hours.

10.4 Lubrication

10.4.1 Lubrication Procedure

500 Operating Hours - Sem-Annually

16. Test the hydraulic fluid to ensure that the fluid is free of contaminants and that it meets recommended specifications. If the hydraulic fluid turns dark or becomes milky colored, it should be drained as soon as possible, the reservoir and system flushed, and then filled with new, clean fluid. See Maintenance - Hydraulic Fluid Sample Valve Option.

17. Drain the pump drive lubricant and flush. Fill the pump drive with new, clean lubricant to the proper operating level. See Maintenance - Engine / Pump Drive.

18. Drain the front and rear axle drive transmissions lubricant and flush. Fill the transmissions with new, clean lubricant to the proper operating level. See Maintenance - Drive Axles / Transmissions.

19. Change the hydraulic system pressure filters. See Maintenance - Hydraulic Pressure Filters Option.

1000 Operating Hours - Annually

20. Drain the hydraulic reservoir and flush. Fill the reservoir with new, clean fluid to the proper operating level. See Maintenance - Hydraulic Reservoir Fluid Level.

21. Remove and clean the hydraulic reservoir suction strainers. See Maintenance - Hydraulic Reservoir Filters.

22. Change the hydraulic reservoir breather / filter and the fill pump filters. See Maintenance - Hydraulic Reservoir Filters.

10.4 Lubrication

FIGURE 10-1
SERVICE CHART

TYPE LUBE — A1 — FREQUENCY OF USE
2 — NO. OF ZERK FITTINGS

A GREASE, E.P. GRADE 2			B GEAR LUBE, E.P.90	
C GRADE ISO-46			D WHITE LUBE, NON-DRYING	
E MOLYBDENUM DISULPHIDE			F OIL 10W-30/10W-40	
G TYPE THF J20C APPROVED			H SAE 15W-40 OIL, API CH-4/SJ	
1 DAILY	2 WEEKLY	3 MONTHLY	4 SEMI-ANNUALLY	5 ANNUALLY

	COMPONENT	REMARKS
	DAILY / 10 HOURS	
1	ENGINE AIR FILTER	CHECK INDICATOR, IF RED - CHANGE FILTER
	ENGINE COOLANT LEVEL	ADD AS NEEDED (50/50 MIX)
	HYDRAULIC OIL FILTER	CHECK INDICATOR WHILE OPERATING, REPLACE IF NECESSARY
H1	ENGINE OIL LEVEL	CHECK LEVEL / ADD AS NEEDED
F1	VIBRATOR OIL LEVEL	MAINTAIN OIL AT 1/2 TO 3/4 FULL IN SIGHT GLASS WITH VIBRATORS IN VERTICAL POSITION
	W/H & COMBO CLAMP GUIDE RODS	FILL 8 OILERS TWICE PER SHIFT
C1	HYDRAULIC OIL LEVEL	MAINTAIN 3/4 MINIMUM IN SIGHT GLASS
A1	VIBRATOR HOUSING PIVOT SHAFT	1 ZERK PER VIBRATOR
	WORKHEAD PIVOT SHAFT	2 ZERKS PER VIBRATOR
	COMBO CLAMP FRAME	7 ZERKS
	WEEKLY / 50 HOURS	
2	BATTERY	CHECK ELECTROLYTE LEVEL, ADD AS NEEDED
A2	BRAKE PIVOT ARM	2 ZERKS FRONT PIVOT AXLE
	SHADOW BOARD LOCK	2 ZERKS
G2	AXLE DRIVE (FRONT & REAR)	CHECK OIL LEVEL, ADD AS NEEDED (FRONT & REAR)
B2	PUMP DRIVE	CHANGE AFTER FIRST 50 HOURS (SEMI-ANNUALLY THEREAFTER)
D2	LINER S/B GUIDE ARMS	1 ZERK PER GUIDE ARM
	SURFACING RECEIVER GUIDE ARMS	1 ZERK PER GUIDE ARM
	MONTHLY/ 200 HOURS	
H3	ENGINE OIL AND FILTER	CHANGE OIL (23.7 QUARTS) AND FILTER
3	FUEL FILTERS (2)	CHANGE
	ENGINE FAN BEARING	CHECK FOR WOBBLE OR EXCESSIVE END PLAY
	AIR SYSTEM FILTER	CLEAN FILTER
F3	VIBRATORS	CHANGE OIL
A3	REAR AXLE PIVOT BUSHING	2 ZERKS PER SIDE
	FRONT AXLE PIVOT BUSHING	2 ZERKS (FRONT & REAR OF PIVOT FRAME)
	HYDRAULIC CYLINDER	2 ZERKS PER CYLINDER (FRONT & REAR)
E3	WORKHEAD TRAVERSE CHAIN	CLEAN AND LUBE
	SEMI-ANNUALLY	
4	AIR DRYER	CHANGE DESICCANT
B4	PUMP DRIVE	DRAIN WHILE HOT, CLEAN MAGNETIC PLUG, RESERVICE
G4	AXLE DRIVE (FRONT & REAR)	CHANGE OIL & FILTER SAE 80W90 (FRONT & REAR)
	ANNUALLY	
5	HYDRAULIC SUCTION STRAINER	CLEAN STRAINER AND MAGNETIC PLUG
C5	HYDRAULIC TANK	DRAIN AND CLEAN

SEE ENGINE MANUAL FOR COMPLETE LUBRICATION
AND PREVENTIVE MAINTENANCE INFORMATION

10.4 Lubrication

FIGURE 10-2
SERVICE PLAQUE

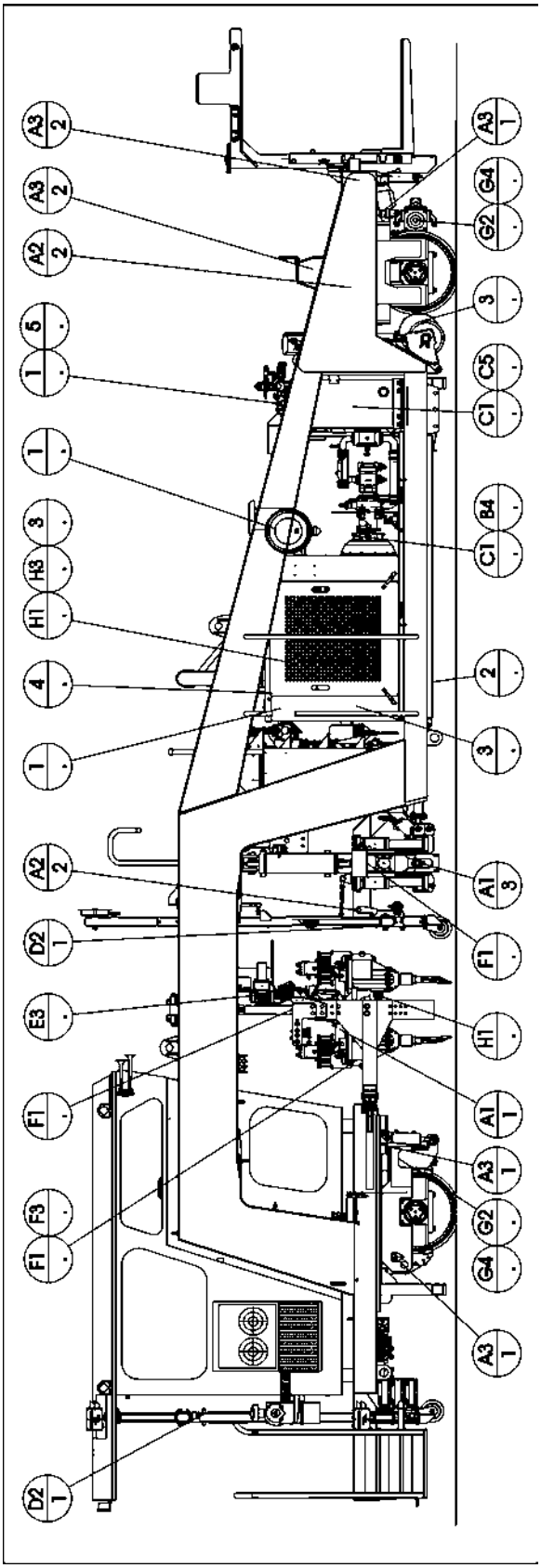

10.5 Engine / Pump Drive

WARNING

- **REFER TO ENERGY CONTROL PROCEDURE TO REMOVE ALL ENERGY SOURCES FROM MACHINE BEFORE PERFORMING MAINTENANCE, OR MAKING ADJUSTMENTS OR REPAIRS TO MACHINE.**

- **BE AWARE OF ALL PINCH POINTS AND KEEP ALL PARTS OF BODY AWAY.**

- **DO NOT TOUCH OR SERVICE ENGINE COMPONENTS, EXHAUST COMPONENTS, RADIATOR, PUMP DRIVE, OIL COOLER, HYDRAULIC PUMPS, MOTORS, VALVES, AIR COMPRESSOR, ETC. WHEN THEY ARE HOT. HOT SURFACES CAN CAUSE SERIOUS BURNS.**

- **WHEN CHECKING THE RADIATOR OF AN ENGINE:**
  - **ALWAYS WEAR APPROPRIATE PERSONAL SAFETY EQUIPMENT.DO NOT REMOVE RADIATOR CAP WHEN ENGINE IS HOT. EXPLOSIVE RELEASE OF FLUIDS FROM PRESSURIZED COOLING SYSTEM CAN CAUSE SERIOUS BURNS. WAIT UNTIL ENGINE COOLS BELOW 120° F (50° C) BEFORE REMOVING RADIATOR CAP.**
  - **COVER RADIATOR FILLER CAP WITH A THICK CLOTH.**
  - **SLOWLY TURN RADIATOR FILLER CAP TO FIRST POSITION TO RELEASE PRESSURE.**
  - **AFTER PRESSURE HAS BEEN RELEASED, REMOVE RADIATOR FILLER CAP.**

- **WHEN CLEANING FINS OF ENGINE RADIATOR USING WATER HOSE OR COMPRESSED AIR:**
  - **ALWAYS WEAR APPROPRIATE PERSONAL SAFETY EQUIPMENT.**
  - **NEVER EXCEED RECOMMENDED AIR OR WATER PRESSURES.**
  - **NEVER LOOK INTO AIR OR WATER JETS OR DIRECT THEM AT ANYONE.**

FAILURE TO HEED THESE WARNINGS COULD RESULT IN SEVERE BODILY INJURY.

10.5 Engine / Pump Drive

10.5.1 **Engine** - See Figures 10-3 and 10-4

1. The engine and air cleaner are located in the center of the machine. The engine and air cleaner consist of the following:

   (1) Engine
   (2) Engine Oil Dip Stick
   (3) Engine Oil Fill Cap
   (4) Engine Oil Filter
   (5) Engine Oil Drain Plug
   (6) Engine Air Cleaner
   (7) Engine Air Cleaner Dust Valve
   (8) Engine Air Cleaner Indicator
   (9) Engine Radiator
   (10) Engine Radiator Cap
   (11) Engine Fuel Filters
   (12) Pump Drive

10.5.2 **Engine Oil** - See Figures 10-3 and 10-4

1. Check the engine oil level daily before starting the engine and every 10 operating hours. Clean around the dip stick (2) and then remove it. The oil level should be up to the full mark on the dip stick (2). If the oil level is low, clean around the oil fill cap (3) and then remove it. Fill with SAE engine oil to the proper operating level. Re-install the dip stick (2) and oil fill cap (3).

   a. See the Engine Manual for the proper oil level and recommended oil grades.

2. Drain the engine oil and change the oil filter (4) monthly or every 200 operating hours. The drain plug (4) is located on the bottom of the engine oil pan. Be sure to catch all oil in a leakproof container and to properly dispose of the drained oil and filter. Install a new oil filter (4) and fill with new clean SAE engine oil to the proper operating level.

   a. See Maintenance - Fluid Drains for the location of the remote engine oil drain, if so equipped.

10.5.3 **Engine Air Cleaner** - See Figure 10-4

1. Squeeze the rubber dust unload valve (7) on the engine air cleaner (6) daily before starting the engine and every 10 operating hours to remove any accumulated dust. This must be done when the engine is not operating or dust will be sucked into the air cleaner.

2. Check the filter restriction indicator (8) on the engine air cleaner (6) daily after starting the engine and every 10 operating hours. If the indicator (6) displays red, the primary air cleaner filter element must be cleaned or both the primary and secondary air filters must be replaced.

3. Replace the engine air cleaner (6) primary and secondary filter elements monthly or every 200 operating hours

10.5 Engine / Pump Drive

10.5.4 Engine Coolant / Radiator - See Figures 10-3 and 10-4

1. Check the engine radiator (9) coolant level daily before starting the engine and every 10 operating hours. The radiator cap(10) is accessible through a trap door on the top of the engine housing. Remove the radiator cap (10). The coolant level should be up to the lower edge of the filler neck. If the coolant level is low, fill with a 50/50 mixture of water and anti-freeze to the proper operating level. Re-install the radiator cap (10).

   a. See the Engine Manual for the proper coolant level and recommended coolants.

2. Clean the radiator (9) fins weekly or every 50 operating hours using a pressurized air hose or pressure washer to remove any accumulated dust, debris, etc. Use care not to damage the fins with excessive pressure or by directing the air or water jet sideways across the fins. Clean the fins in the opposite direction of normal air flow. Do not exceed an air pressure of 120 PSI (8.27 bar).

FIGURE 10-3
ENGINE - LEFT SIDE

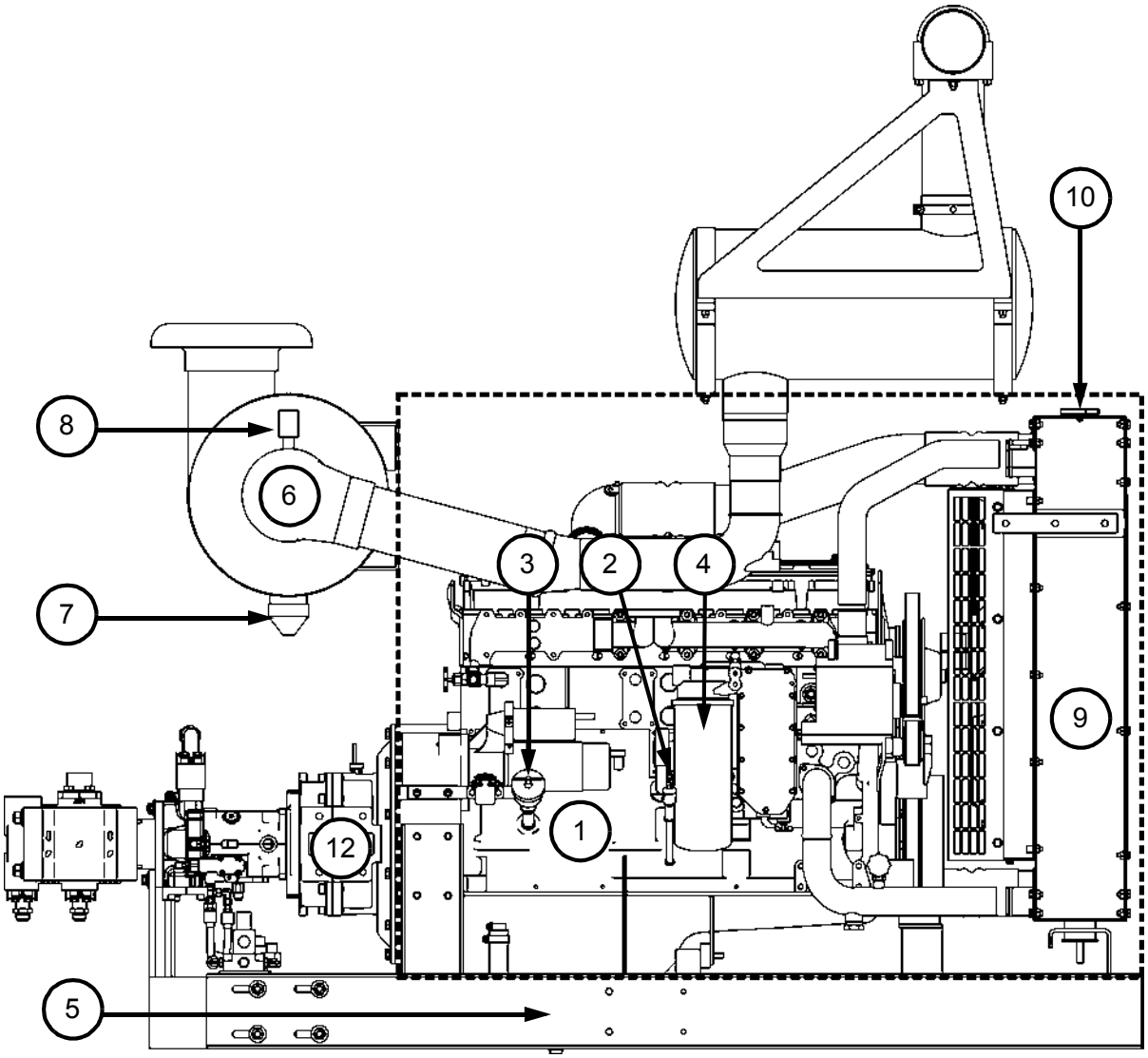

10.5 Engine / Pump Drive

10.5.5 Engine Fuel Filters - See Figure 10-4

1. Drain a small amount of fuel from the engine fuel filters (12) daily or every 10 operating hours to remove any accumulated moisture. Be sure to catch all fuel in a leakproof container and to properly dispose of the drained fuel.

2. Replace the engine fuel filters (12) monthly or every 200 operating hours

FIGURE 10-4
ENGINE - RIGHT SIDE

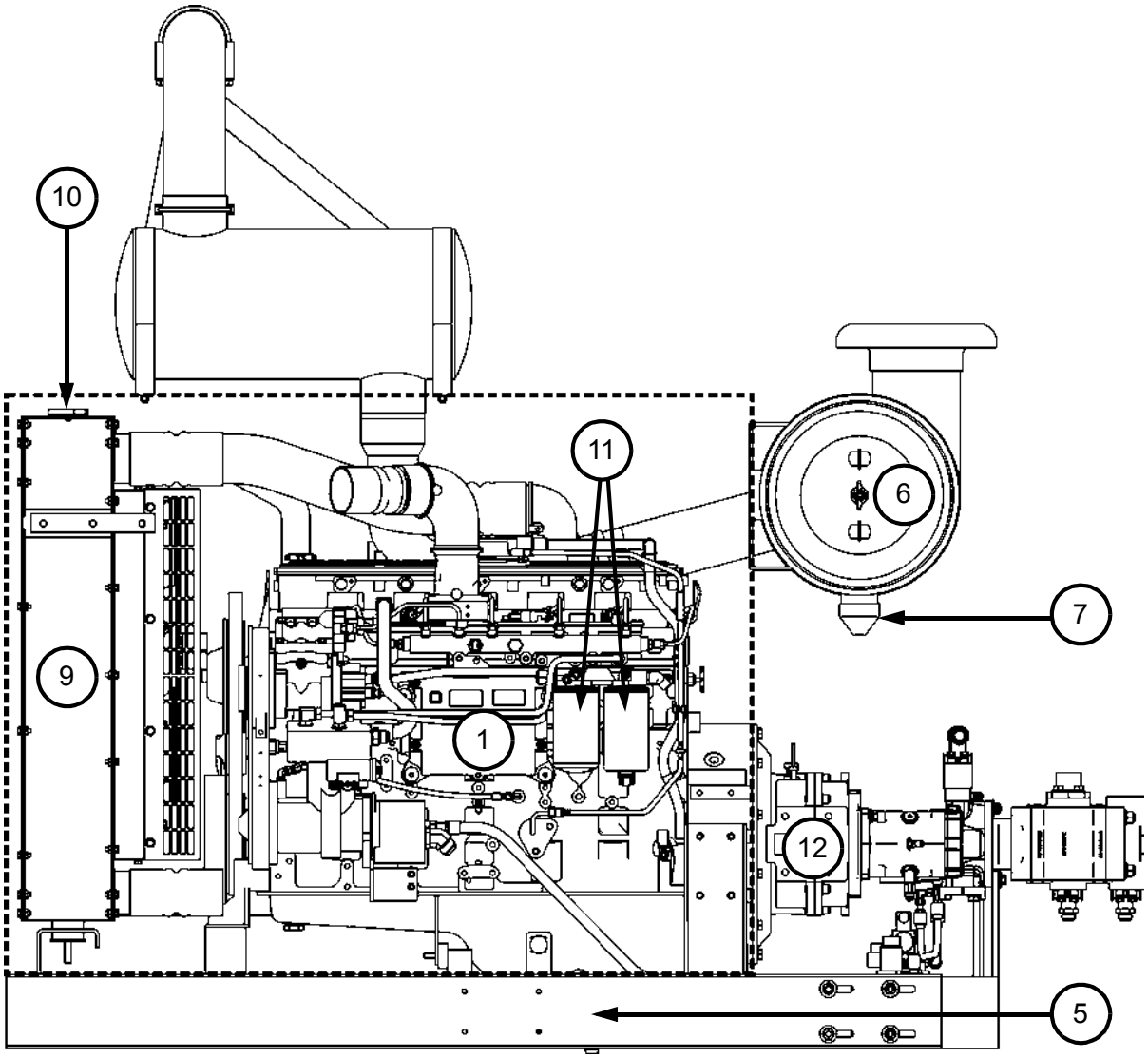

10.5 Engine / Pump Drive

10.5.6 Pump Drive - See Figure 10-5

1. The pump drive is located on the front of the engine. The pump drive consists of the following:

   (1) Pump Drive
   (2) Pump Drive Dip Stick
   (3) Pump Drive Check Plug
   (4) Pump Driver Breather Cap
   (5) Pump Drive Drain Plug

10.5.7 Pump Drive Lube - See Figure 10-5

1. Check the pump drive (1) lubricant level weekly or every 50 operating hours. Clean around the dip stick (2) on the top of the pump drive housing and then remove it. The lubricant level should be up to the full mark on the dip stick (2). Re-install the dip stick (2). If the lubricant level is low, lubricant needs to be added. See Figure 10-1 - Service Chart for lubricant specifications. Clean around the check plug (3) and the breather cap (4) and then remove them. Add lubricant through the breather cap (4) opening until the lubricant level is up to the bottom of the check plug (3) hole. Then re-install the check plug (3).

2. Drain the pump drive (1) lubricant and flush initially after the first 50 operating hours and thereafter semi-annually or every 500 operating hours. The drain plug (5) is located on the bottom of the pump drive housing. Be sure to catch all lubricant in a leakproof container and to properly dispose of the drained lubricant. Fill the pump drive (1) with new, clean lubricant up to the bottom of the check plug (3) hole. Then re-install the check plug (3). See Figure 10-1 - Service Chart for lubricant specifications.

10.5 Engine / Pump Drive

FIGURE 10-5
PUMP DRIVE

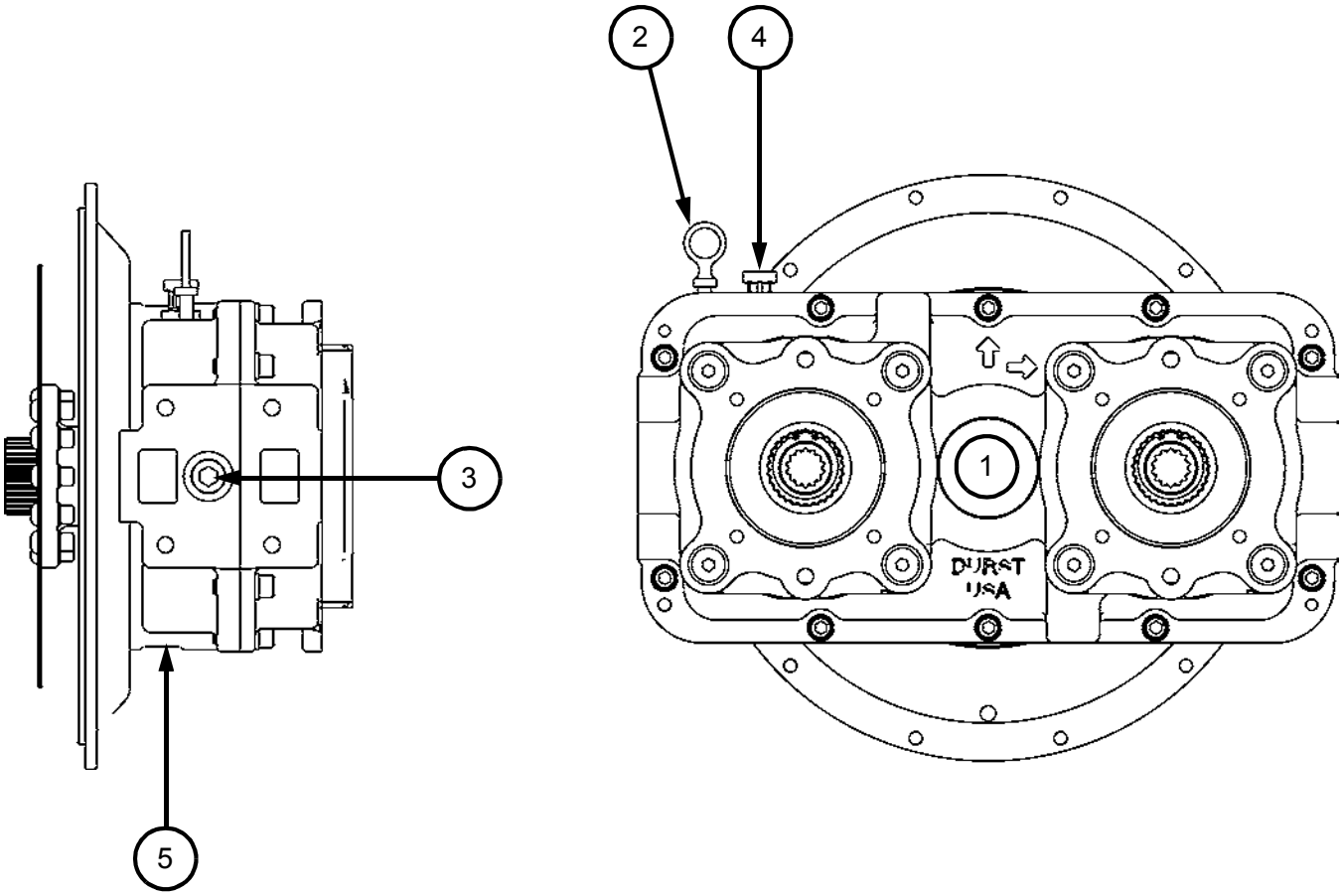

10.6 Fuel System

DANGER

- **STOP ENGINE WHEN FILLING FUEL TANK. DO NOT FILL FUEL TANK OR ADJUST FUEL SYSTEM NEAR AN OPEN FLAME, SPARKS OR WHEN SMOKING. FUEL FUMES ARE FLAMMABLE AND/OR EXPLOSIVE, AND IF IGNITED WILL RESULT IN SEVERE BODILY INJURY OR DEATH.**

WARNING

- **REFER TO ENERGY CONTROL PROCEDURE TO REMOVE ALL ENERGY SOURCES FROM MACHINE BEFORE PERFORMING MAINTENANCE, OR MAKING ADJUSTMENTS OR REPAIRS TO MACHINE.**
- **BE AWARE OF ALL PINCH POINTS AND KEEP ALL PARTS OF BODY AWAY.**

FAILURE TO HEED THESE WARNINGS COULD RESULT IN SEVERE BODILY INJURY.

10.6.1 Fuel System - See Figures 10-6 and 10-7

1. The fuel tank (1) and remote fuel filter option (6) are located behind the engine. The fuel system consists of the following:

(1)	Fuel Tank	(4)	Fuel Tank Drain Plug
(2)	Fuel Tank Gauge	(5)	Fuel Tank Shut Off Valve
(3)	Fuel Tank Fill Cap	(6)	Remote Fuel Filter Option

10.6.2 Fuel Tank - See Figure 10-6

1. Check the fuel tank (1) level daily before starting the engine and every 10 operating hours. Fill the fuel tank with a grade of diesel fuel recommended by the engine manufacturer.

2. If it is necessary to drain the fuel out of the tank (1), the drain plug (4) is located on the bottom of the tank. Make sure the fluid collection container capacity is large enough to hold the fluid being drained. Be sure to catch all fuel in a leakproof container and to properly dispose of the drained fuel.

   a. See Maintenance - Fluid Drains for the location of the remote fuel tank drain valve, if so equipped.

10.6.3 Remote Fuel Filter Option - See Figure 10-7

1. Drain a small amount of fuel from the remote fuel filter (6) daily or every 10 operating hours to remove any accumulated moisture. Be sure to catch all fuel in a leakproof container and to properly dispose of the drained fuel.

2. Replace the remote fuel filter (6) element monthly or every 200 operating hours

10.6 Fuel System

FIGURE 10-6
FUEL TANK

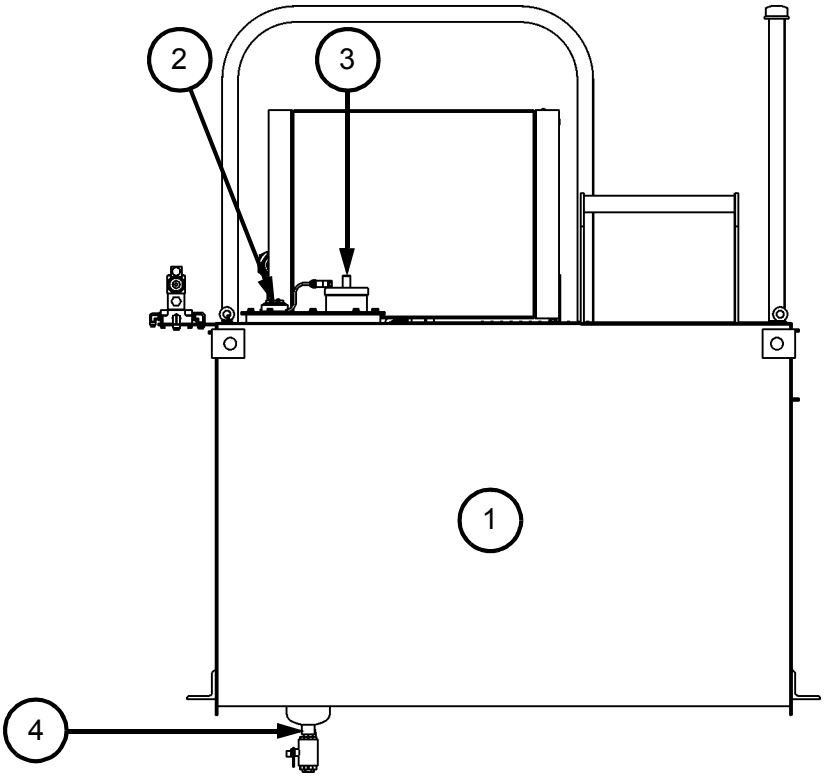

FIGURE 10-7
REMOTE FUEL FILTER OPTION

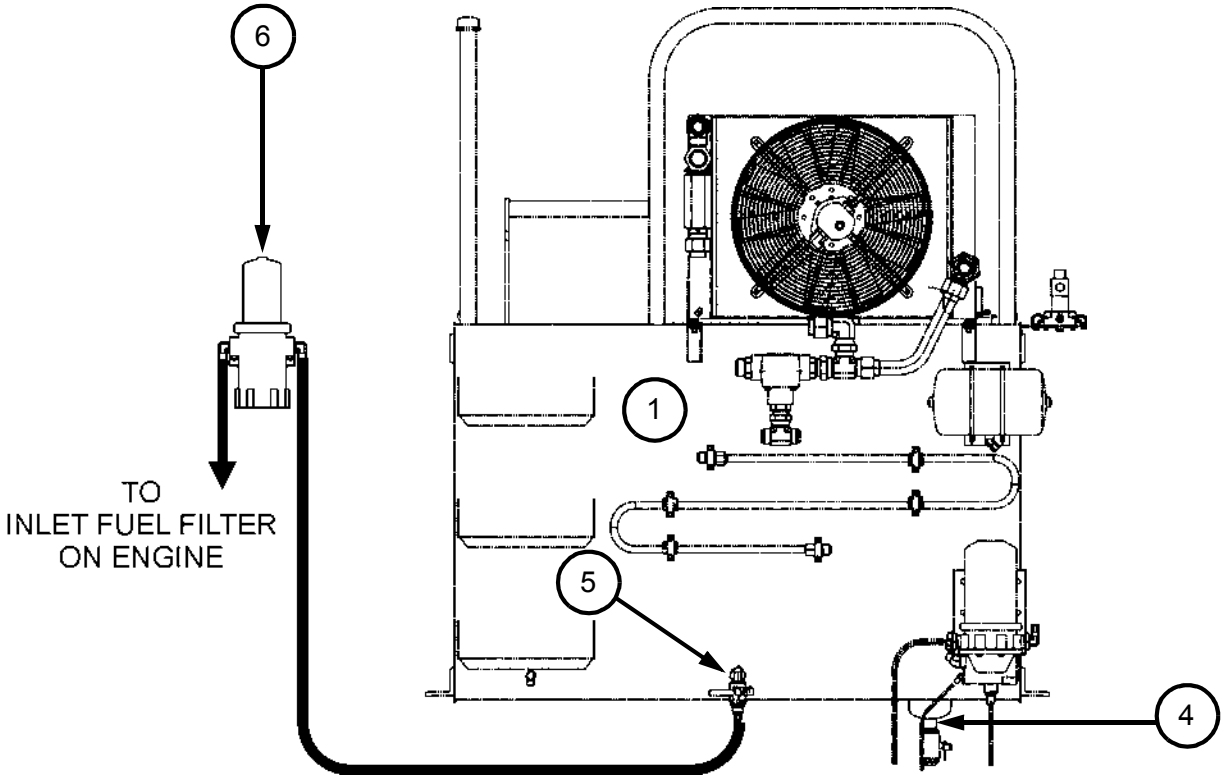

10.7 Drive Axles / Transmissions

WARNING

- **REFER TO ENERGY CONTROL PROCEDURE TO REMOVE ALL ENERGY SOURCES FROM MACHINE BEFORE PERFORMING MAINTENANCE, OR MAKING ADJUSTMENTS OR REPAIRS TO MACHINE.**
- **BE AWARE OF ALL PINCH POINTS AND KEEP ALL PARTS OF BODY AWAY.**
- **DO NOT TOUCH OR SERVICE ENGINE COMPONENTS, EXHAUST COMPONENTS, RADIATOR, PUMP DRIVE, OIL COOLER, HYDRAULIC PUMPS, MOTORS, VALVES, AIR COMPRESSOR, ETC. WHEN THEY ARE HOT. HOT SURFACES CAN CAUSE SERIOUS BURNS.**

FAILURE TO HEED THESE WARNINGS COULD RESULT IN SEVERE BODILY INJURY.

10.7.1 Front Drive Axle - See Figure 10-7

1. The front drive axle is located on the front of the machine. The front drive axle consists of the following:

   (1) Brake Arm Pivot Lube (2 points)
   (2) Frame Pivot Lube (2 points)
   (3) Transmission Pivot (1 point)
   (4) Lockout Cylinders (4 points)
   (5) Remote Lube Option (4 points)
   (6) Transmission

10.7.2 Front Drive Axle Lube - See Figure 10-7

1. Lubricate the brake pivot arms (1) weekly or every 50 operating hours. See Figure 10-1 - Service Chart for lubricant specifications.

2. Lubricate the frame pivots (2), transmission pivot (3) and lockout cylinders (4) monthly or every 200 operating hours. See Figure 10-1 - Service Chart for lubricant specifications.

10.7.3 Front Drive Axle Remote Lube Option - See Figure 10-7

1. The front drive axle may be equipped with the remote lube option (5) located on the left side of the front drive axle frame. The remote lube option provides easier access to the following lube points: See Figure 10-1 - Service Chart for lubricant specifications.

   (1R) Brake Arm Pivot Lube (2 points)
   (2R) Frame Pivot Lube (2 points)

10.7 Drive Axles / Transmissions

FIGURE 10-7
FRONT DRIVE AXLE

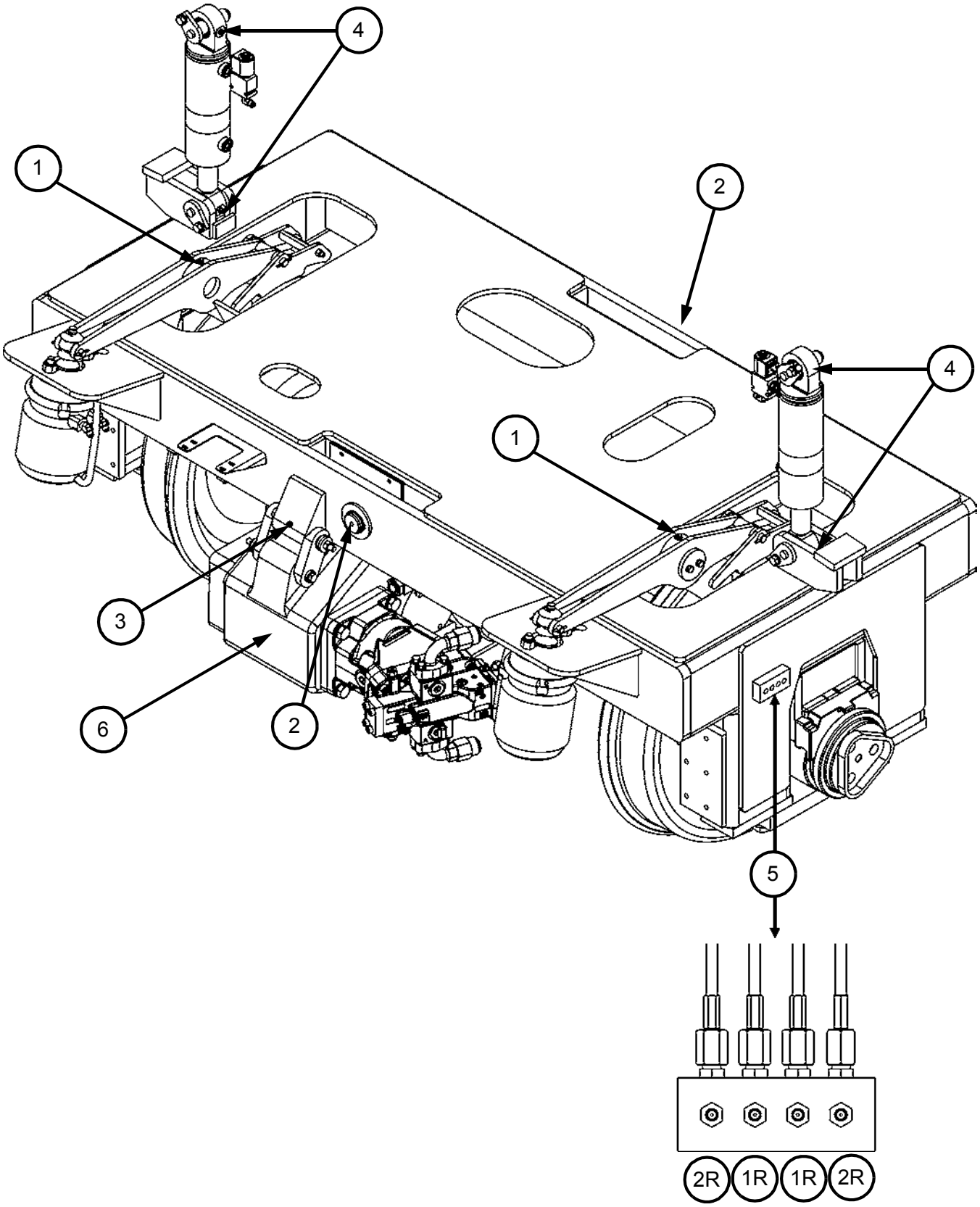

10.7 Drive Axles / Transmissions

10.7.4 Rear Drive Axle - See Figure 10-8

1. The rear drive axle is located on the rear of the machine. The rear drive axle consists of the following:

   (1) Frame Pivot Lube (4 points))
   (2) Transmission Pivot (1 point)
   (3) Lockout Cylinders (4 points)
   (4) Transmission

10.7.5 Rear Drive Axle Lube - See Figure 10-8

1. Lubricate the frame pivots (1), transmission pivot (3) and lockout cylinders (3) monthly or every 200 operating hours. See Figure 10-1 - Service Chart for lubricant specifications.

FIGURE 10-8
REAR DRIVE AXLE

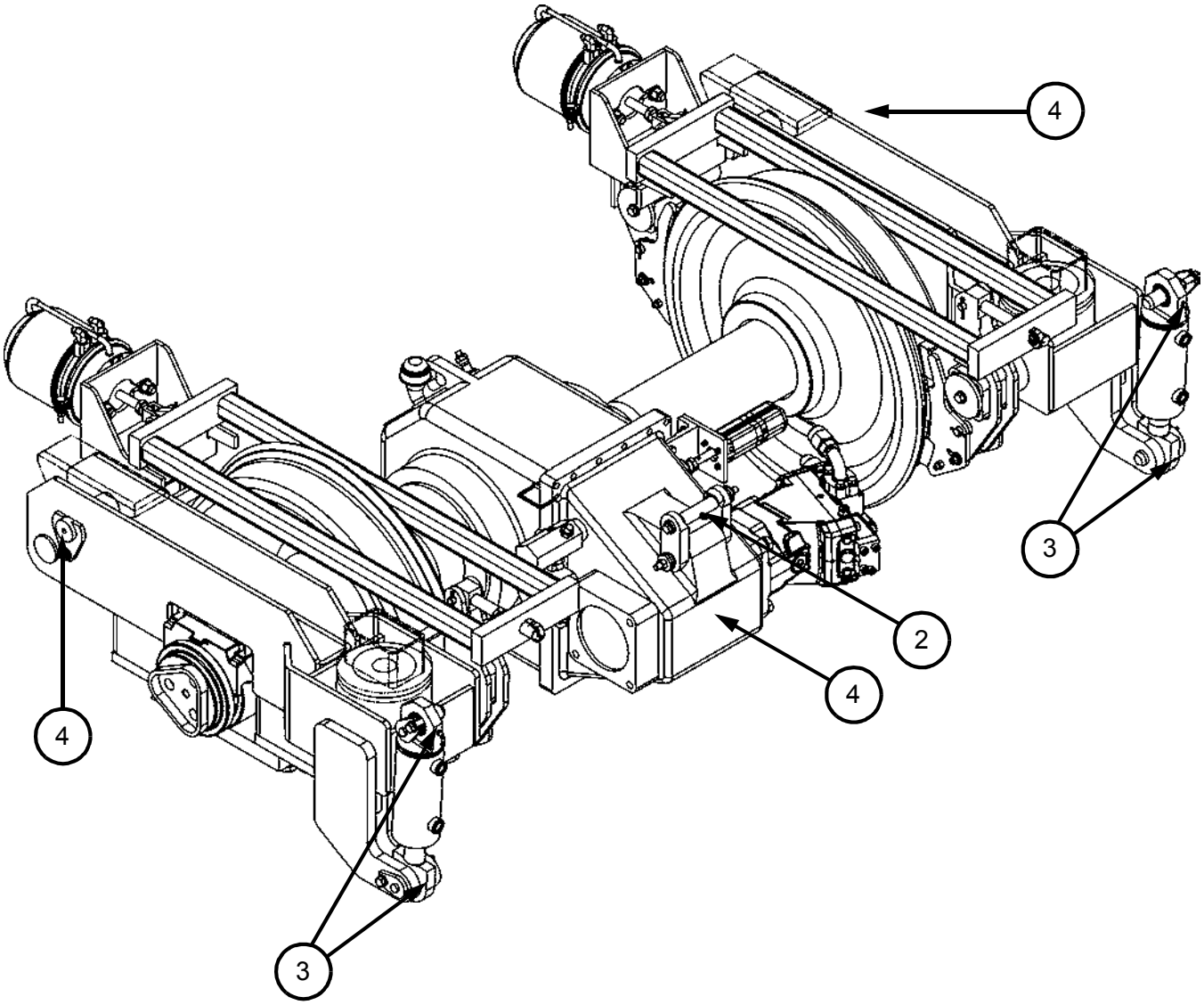

10.7 Drive Axles / Transmissions

10.7.6 Transmissions - See Figure 10-9

1. The transmissions are located on the front and rear drive axles of the machine. The transmissions consist of the following:

   (1) Transmission
   (2) Transmission Check Plug
   (3) Transmission Breather Cap
   (4) Transmission Drain Plug

10.7.7 Transmissions Lube - See Figure 10-9

1. Check the transmissions (1) lubricant level weekly or every 50 operating hours. Clean around the check plug (2) on the side of the transmission housing and then remove it. The lubricant level should be up to the bottom of the check plug (2) hole. If the lubricant level is low, lubricant needs to be added. See Figure 10-1 - Service Chart for lubricant specifications. Clean around the breather cap (3) and then remove it. Add lubricant through the breather cap (3) opening until the lubricant level is up to the bottom of the check plug (2) hole. Then re-install the check plug (2).

2. Drain the transmissions (1) lubricant and flush initially after the first 50 operating hours and thereafter semi-annually or every 500 operating hours. The drain plug (4) is located on the bottom of the transmission housing. Be sure to catch all lubricant in a leakproof container and to properly dispose of the drained lubricant. Fill the transmission (1) with new, clean lubricant up to the bottom of the check plug hole (2). See Figure 10-1 - Service Chart for lubricant specifications.

FIGURE 10-9
TRANSMISSION

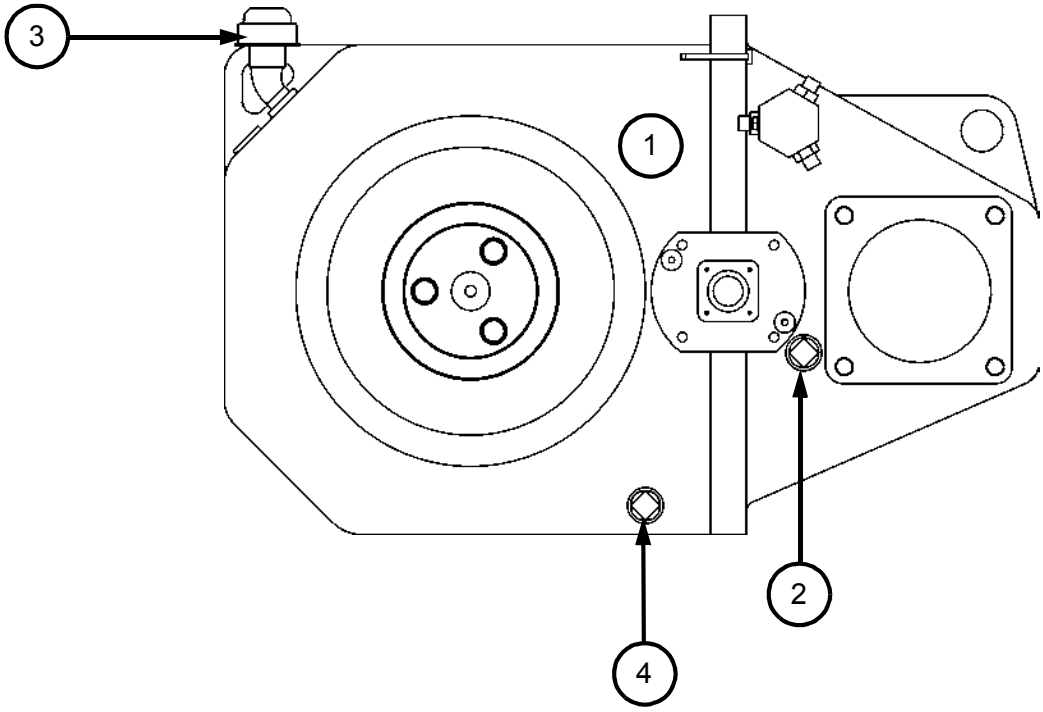

10.8 Workheads

WARNING

- **REFER TO ENERGY CONTROL PROCEDURE TO REMOVE ALL ENERGY SOURCES FROM MACHINE BEFORE PERFORMING MAINTENANCE, OR MAKING ADJUSTMENTS OR REPAIRS TO MACHINE.**
- **BE AWARE OF ALL PINCH POINTS AND KEEP ALL PARTS OF BODY AWAY.**

FAILURE TO HEED THESE WARNINGS COULD RESULT IN SEVERE BODILY INJURY.

10.8.1 Workheads Traverse - See Figure 10-10

1. The workheads traverse mechanism is located ahead of the cab. The workheads traverse mechanism consists of the following:

   (1) Workhead Traverse Mechanism
   (2) Workhead Traverse Motors (1 left and 1 right)
   (3) Workhead Traverse Load Adapters Lube (1 point per each side)
   (4) Workhead Traverse Roller Chain
   (5) Workheads (1 left and 1 right)

10.8.2 Workheads Traverse Lube - See Figure 10-10

1. Lubricate the workheads traverse load adapters (3) monthly or every 200 operating hours. See Figure 10-1 - Service Chart for lubricant specifications.

2. Clean and lubricate the workheads traverse roller chain (1) monthly or every 200 operating hours. See Figure 10-1 - Service Chart for lubricant specifications.

10.8 Workheads

FIGURE 10-10
WORKHEADS TRAVERSE

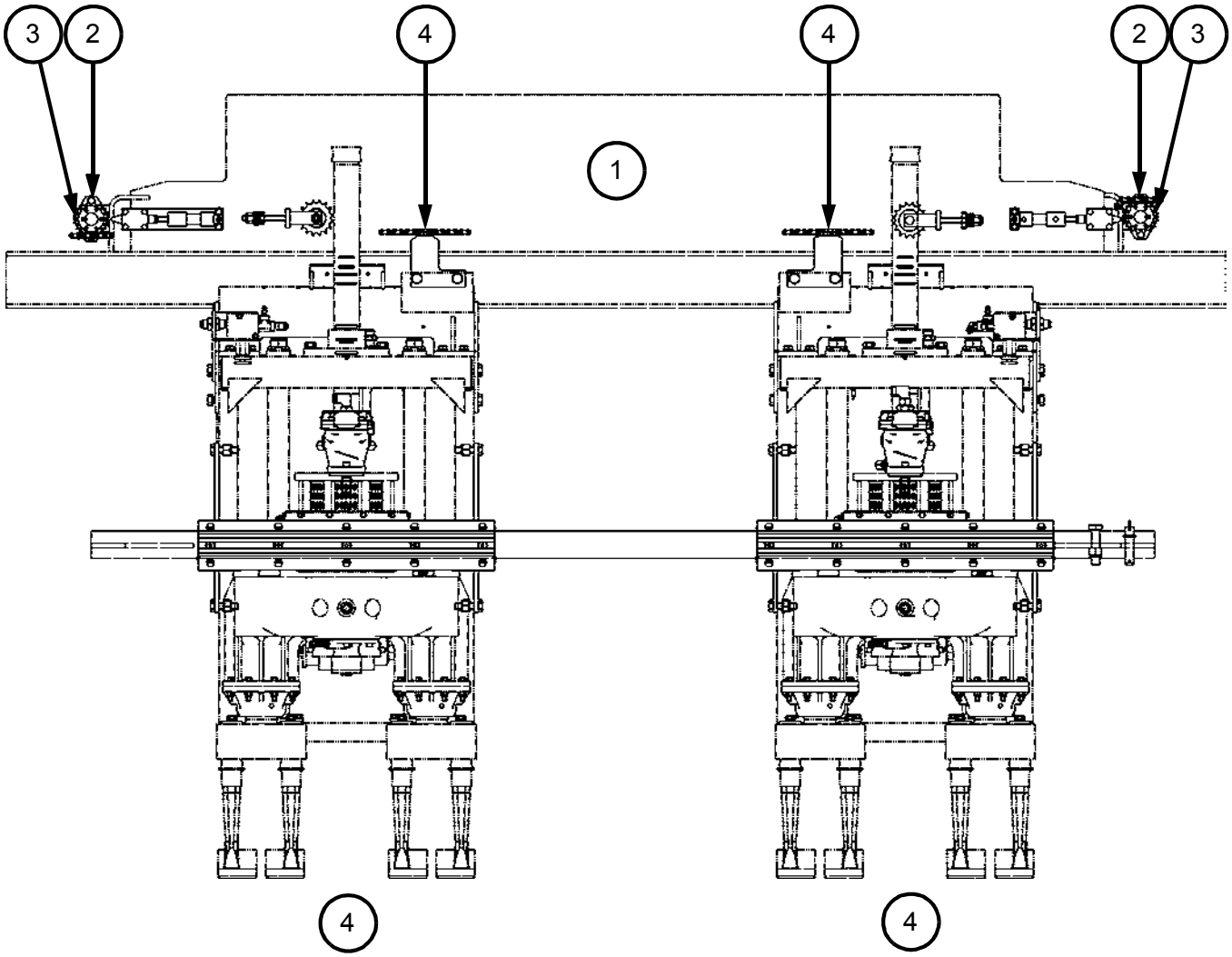

10.8 Workheads

10.8.3 Workheads - See Figure 10-11

1. The workheads are located ahead of the cab. The workheads consist of the following:

   (1) Workheads (1 left and 1 right)
   (2) Workhead Pivot Lube (2 points per each vibrator)
   (3) Vibrators (4 total)
   (4 Vibrator Pivot Lube (1 point per each vibrator)
   (5) Workhead Pivot Remote Lube Option (1 per each vibrator)
   (6) Guide Rod Auto Oilers Option (2 per each workhead))

10.8.4 Workheads Lube - See Figure 10-11

1. Lubricate the left and right workheads pivots (2) and vibrator pivots (4) daily or every 10 operating hours. See Figure 10-1 - Service Chart for lubricant specifications.

10.8.5 Workheads Remote Lube Option - See Figure 10-11

1. The workheads may be equipped with the remote lube option (5) located on the side of each workhead. The remote lube option provides easier access to the following lube points: See Figure 10-1 - Service Chart for lubricant specifications.

   (2R) Workhead Pivot Lube (2 points per each vibrator)

10.8.6 Workheads Auto Oilers Option - See Figure 10-11

1. Check the auto oilers operation by inspecting the workhead guide rods (6) for wetness. The guide rods must be wet, but not so wet as to be dripping fluid onto the ground. If necessary, adjust the auto oilers. See Maintenance - Auto Oilers for information.

10.8 Workheads

FIGURE 10-11
WORKHEADS

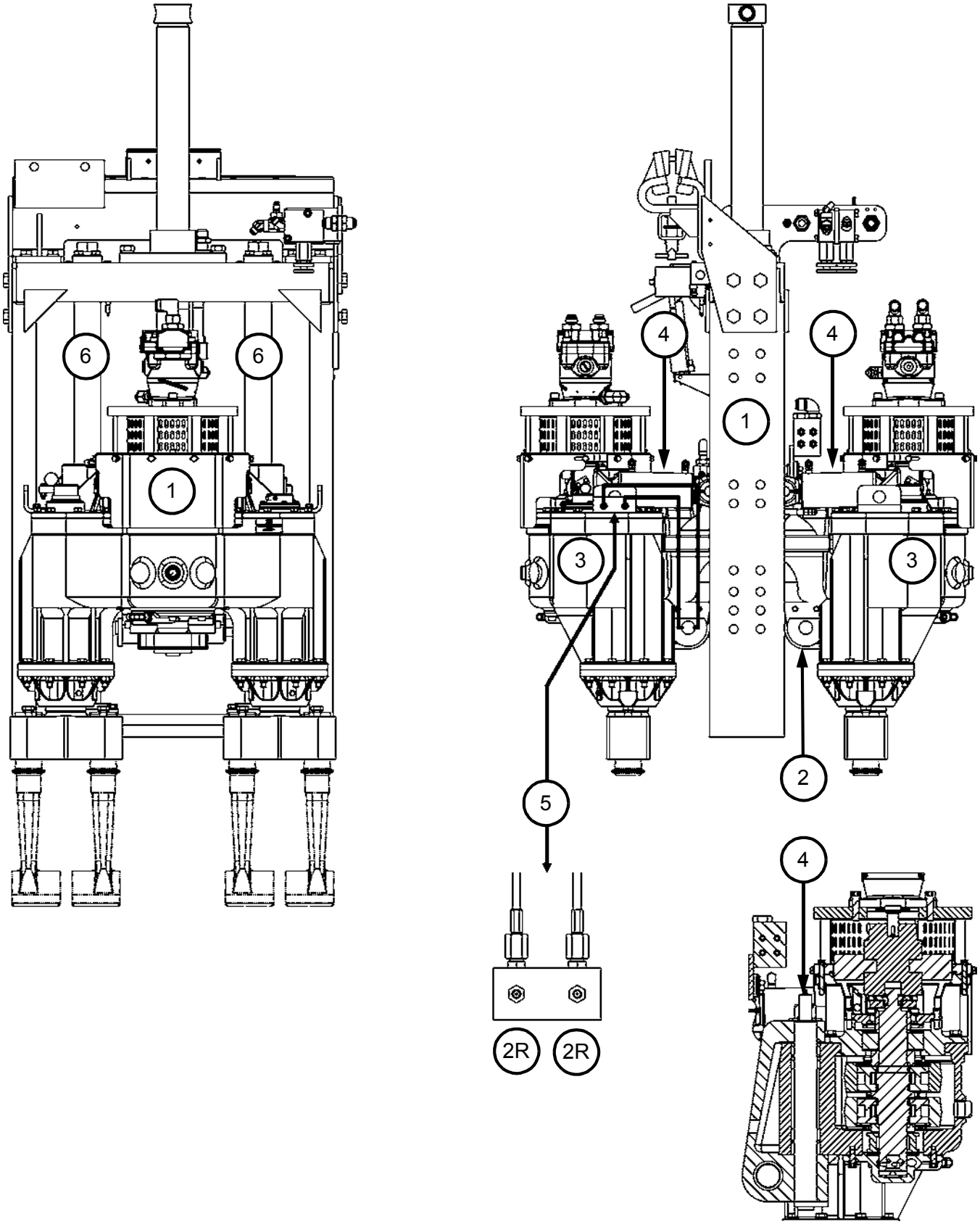

10.8 Workheads

10.8.7 **Vibrators** - See Figure 10-12

1. The vibrators are located on the workheads. The vibrators consist of the following:

   (1) Vibrators (4 total)
   (2) Vibrator Lube Sight Glass
   (3) Vibrator Breather / Fill Cap
   (4) Vibrator Drain Plugs (6 per each vibrator)
   (5) Vibrator Tamping Tools (4 per each vibrator)

10.8.8 **Vibrators Lube** - See Figure 10-12

1. Check the vibrators (1) lubricant level weekly or every 50 operating hours. The lubricant level should be 1/2 to 3/4 full in the sight glass (2) on the side of the vibrator housing.

   a. If the lubricant level is low, lubricant needs to be added. See Figure 10-1 - Service Chart for lubricant specifications. Clean around the breather / fill cap (3) and then remove it. Add lubricant through the breather / fill cap (3) opening until the lubricant level is at 1/2 to 3/4 full in the sight glass (2) on the side of the vibrator housing. Then re-install the breather / fill (3).

2. Drain the vibrators (1) lubricant monthly or every 200 operating hours. The drain plugs (4) are located around the bottom of the vibrator housing. Be sure to catch all lubricant in a leakproof container and to properly dispose of the drained lubricant. Fill the vibrators (1) with new, clean lubricant so the lubricant level is at 1/2 to 3/4 full in the sight glass (2) on the side of the vibrator housing. See Figure 10-1 - Service Chart for lubricant specifications.

10.8 Workheads

FIGURE 10-12
VIBRATORS

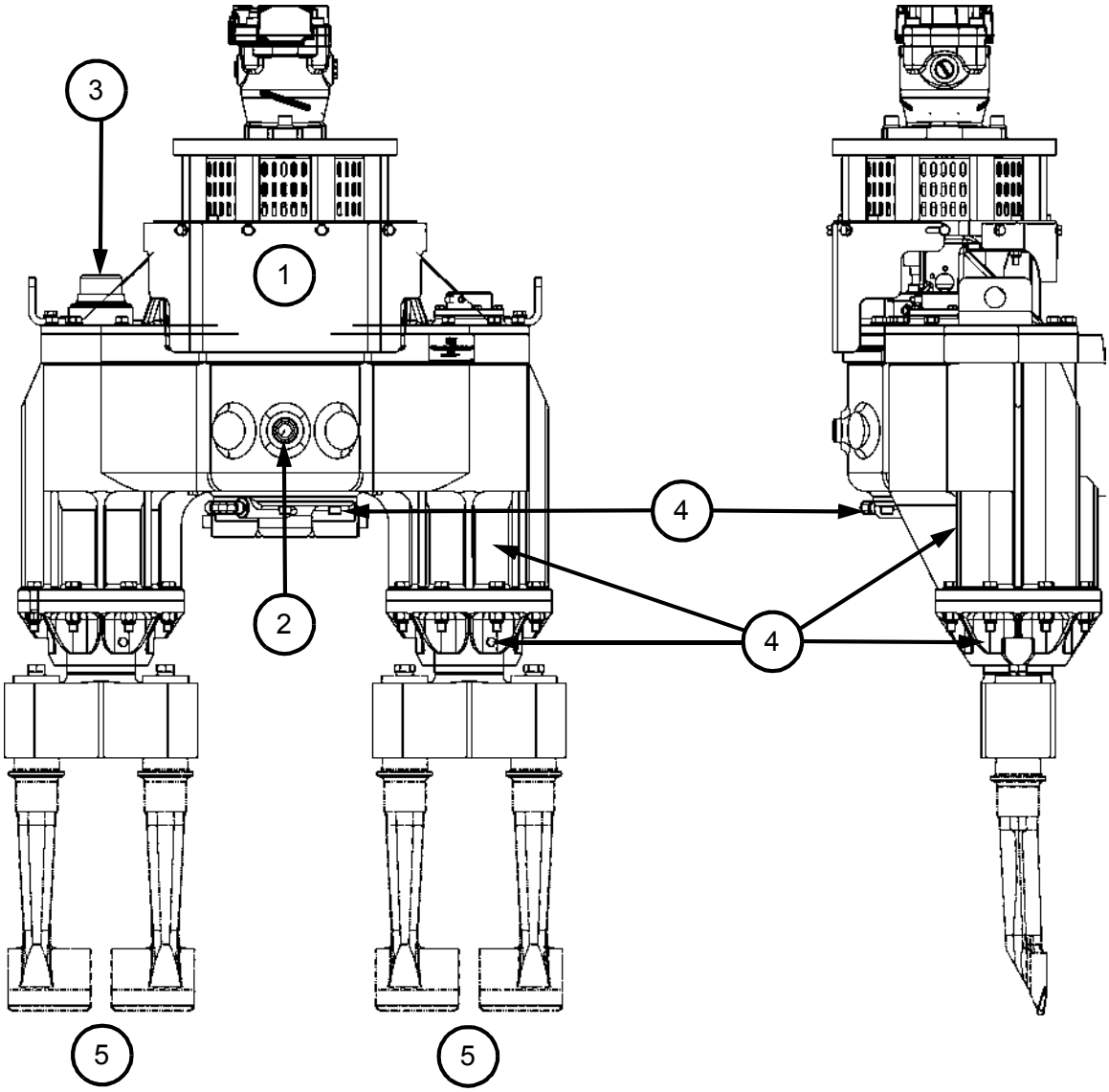

10.9 Combo Clamps

WARNING

- **REFER TO ENERGY CONTROL PROCEDURE TO REMOVE ALL ENERGY SOURCES FROM MACHINE BEFORE PERFORMING MAINTENANCE, OR MAKING ADJUSTMENTS OR REPAIRS TO MACHINE.**
- **BE AWARE OF ALL PINCH POINTS AND KEEP ALL PARTS OF BODY AWAY.**

FAILURE TO HEED THESE WARNINGS COULD RESULT IN SEVERE BODILY INJURY.

10.9.1 Combo Clamps - See Figure 10-13

1. The combo clamps are located ahead of the workheads. The combo clamps consist of the following:

   (1) Combo Clamps (1 per each side)
   (2) Wheel Shafts Lube (2 points per each side)
   (3) Hook Extend Rod Lube (1 point per each side)
   (4) Bias Plate Shaft Lube (1 point only right side)
   (5) Guide Rod Auto Oilers Option (2 per each side)

10.9.2 Combo Clamps Lube - See Figure 10-13

1. Lubricate the left and right combo clamps wheel shafts (2), hook extend rods (3) and bias plate shaft (4) daily or every 10 operating hours. See Figure 10-1 - Service Chart for lubricant specifications.

10.9.3 Combo Clamps Auto Oilers Option - See Figure 10-13

1. Check the auto oilers operation by inspecting the combos clamp guide rods (5) for wetness. The guide rods must be wet, but not so wet as to be dripping fluid onto the ground. If necessary, adjust the auto oilers. See Maintenance - Auto Oilers for information.

10.9 Combo Clamp

FIGURE 10-13
COMBO CLAMPS

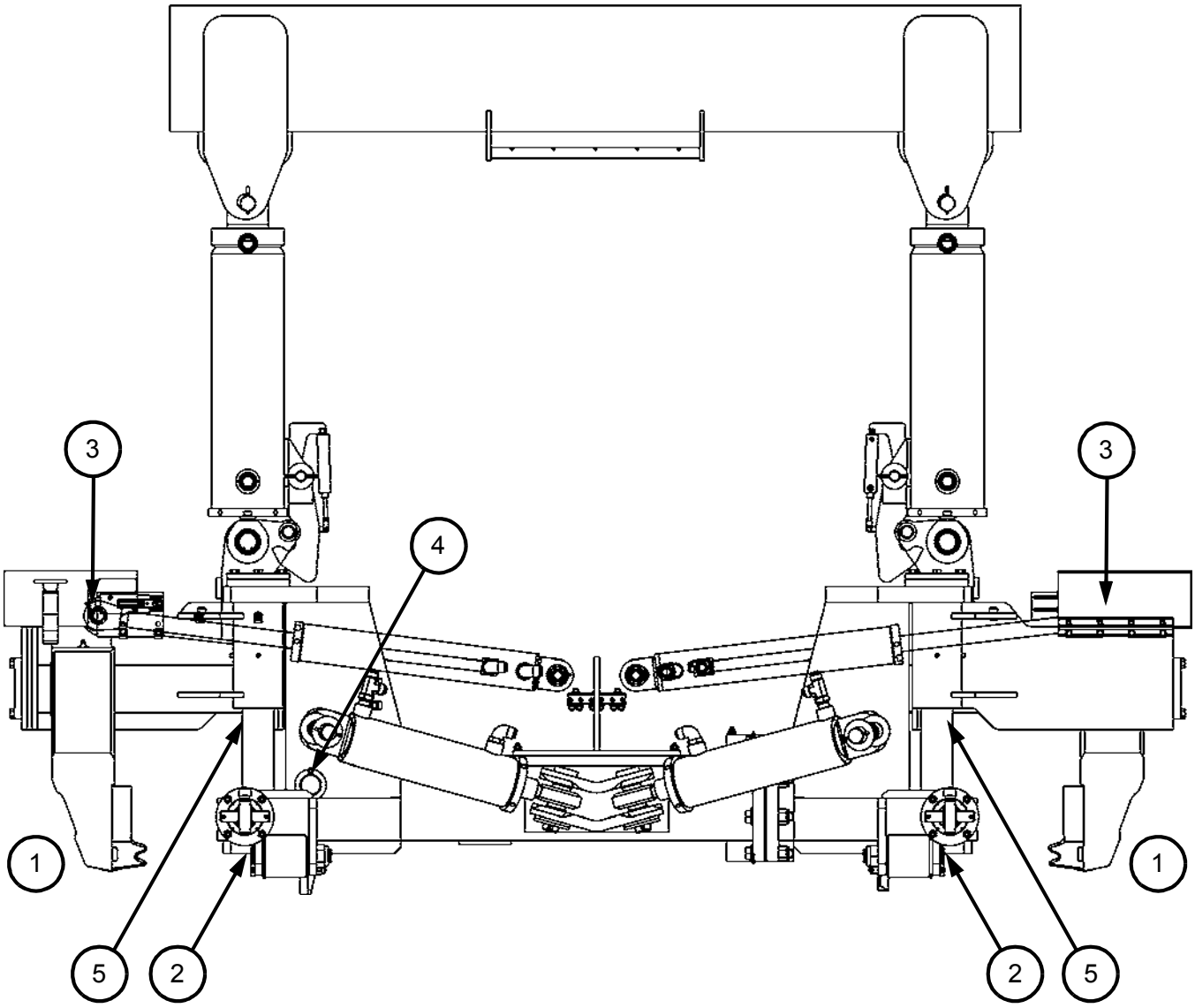

10.10 Auto Oilers Option

WARNING

- **REFER TO ENERGY CONTROL PROCEDURE TO REMOVE ALL ENERGY SOURCES FROM MACHINE BEFORE PERFORMING MAINTENANCE, OR MAKING ADJUSTMENTS OR REPAIRS TO MACHINE.**
- **BE AWARE OF ALL PINCH POINTS AND KEEP ALL PARTS OF BODY AWAY.**

FAILURE TO HEED THESE WARNINGS COULD RESULT IN SEVERE BODILY INJURY.

10.10.1 Auto Oilers Option - See Figure 10-14

1. The auto oilers manifold is located overhead of the workheads. The auto oilers consist of the following:

   (1) Valve - Left Workhead Left Guide Rod
   (2) Valve - Left Workhead Right Guide Rod
   (3) Valve - Left Combo Clamp Front Guide Rod
   (4) Valve - Left Combo Clamp Front Guide Rod
   (5) Valve - Right Workhead Left Guide Rod
   (6) Valve - Right Workhead Right Guide Rod
   (7) Valve - Right Combo Clamp Front Guide Rod
   (8) Valve - Right Combo Clamp Front Guide Rod
   (9) Auto Oiler Manifold

10.10.2 Workheads Auto Oilers Option - See Figure 10-14

1. Check the auto oilers operation by inspecting the workhead guide rods for wetness. The guide rods must be wet, but not so wet as to be dripping fluid onto the ground. If necessary, adjust the auto oilers. See Auto Oilers Adjustment Procedure.

10.10.3 Combo Clamps Auto Oilers Option - See Figure 10-14

1. Check the auto oilers operation by inspecting the combo clamps guide rods for wetness. The guide rods must be wet, but not so wet as to be dripping fluid onto the ground. If necessary, adjust the auto oilers. See Auto Oilers Adjustment Procedure.

10.10 Auto Oilers Option

10.10.4 Auto Oilers Adjustment - See Figure 10-14

1. To adjust the auto oiler valves, loosen the lock nut on the adjusting knob on the top of the valve. Turn the valve clockwise to decrease the flow or counter-clockwise to increase the flow. Limit the adjust to one complete turn of the knob. Then retighten the lock nut on the adjusting knob.

2. Recheck the guide rod that was just adjusted after 1/2 an hour to see if the guide rod flow is set correctly.

FIGURE 10-14
AUTO OILERS

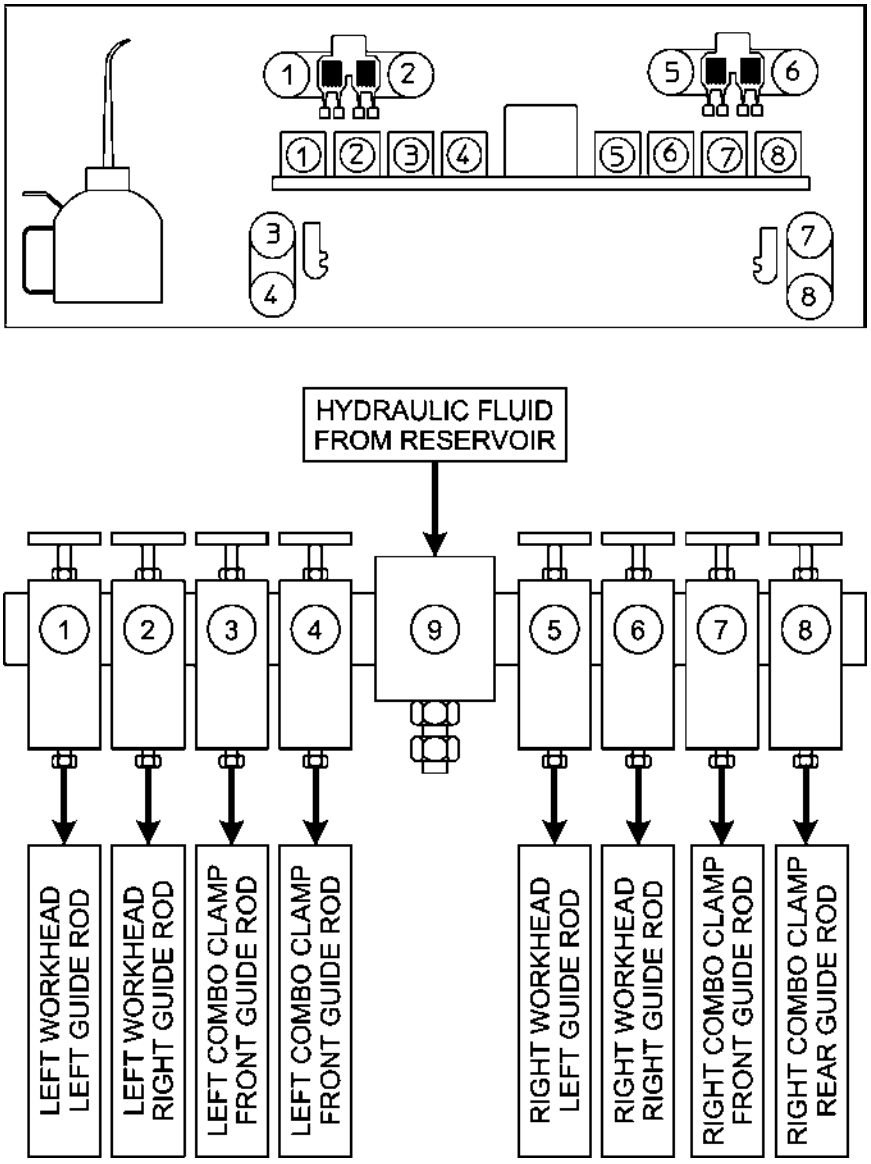

10.11 Lining System

WARNING

- **REFER TO ENERGY CONTROL PROCEDURE TO REMOVE ALL ENERGY SOURCES FROM MACHINE BEFORE PERFORMING MAINTENANCE, OR MAKING ADJUSTMENTS OR REPAIRS TO MACHINE.**
- **BE AWARE OF ALL PINCH POINTS AND KEEP ALL PARTS OF BODY AWAY.**

FAILURE TO HEED THESE WARNINGS COULD RESULT IN SEVERE BODILY INJURY.

10.11.1 Shadowboard - See Figure 10-15

1. The shadowboard is located ahead of the workheads. The shadowboard consists of the following:

   (1) Showdowboard
   (2) Showdowboard Locks Lube (1 point per each side)
   (3) Liner Flags (1 per each side)
   (4) Liner Flag Pivot Lube (1 point per each side)
   (5) Liner Flag Actuators (1 per each side)
   (6) Liner Flag Actuators Lube (1 point per each side)
   (7) Liner Flag Guide Rods Lube (1 point per each side)

10.11.2 Shadowboard Lube - See Figure 10-15

1. Lubricate the shadowboard lock (2) weekly or every 50 operating hours. See Figure 10-1 - Service Chart for lubricant specifications.

10.11.3 Liner Flags Lube - See Figure 10-15

1. Lubricate the left and right liner flag pivots (4), actuators (6) and guide rods (7) weekly or every 50 operating hours. See Figure 10-1 - Service Chart for lubricant specifications.

10.11 Lining System

FIGURE 10-15
SHADOWBOARD AND LINER FLAGS

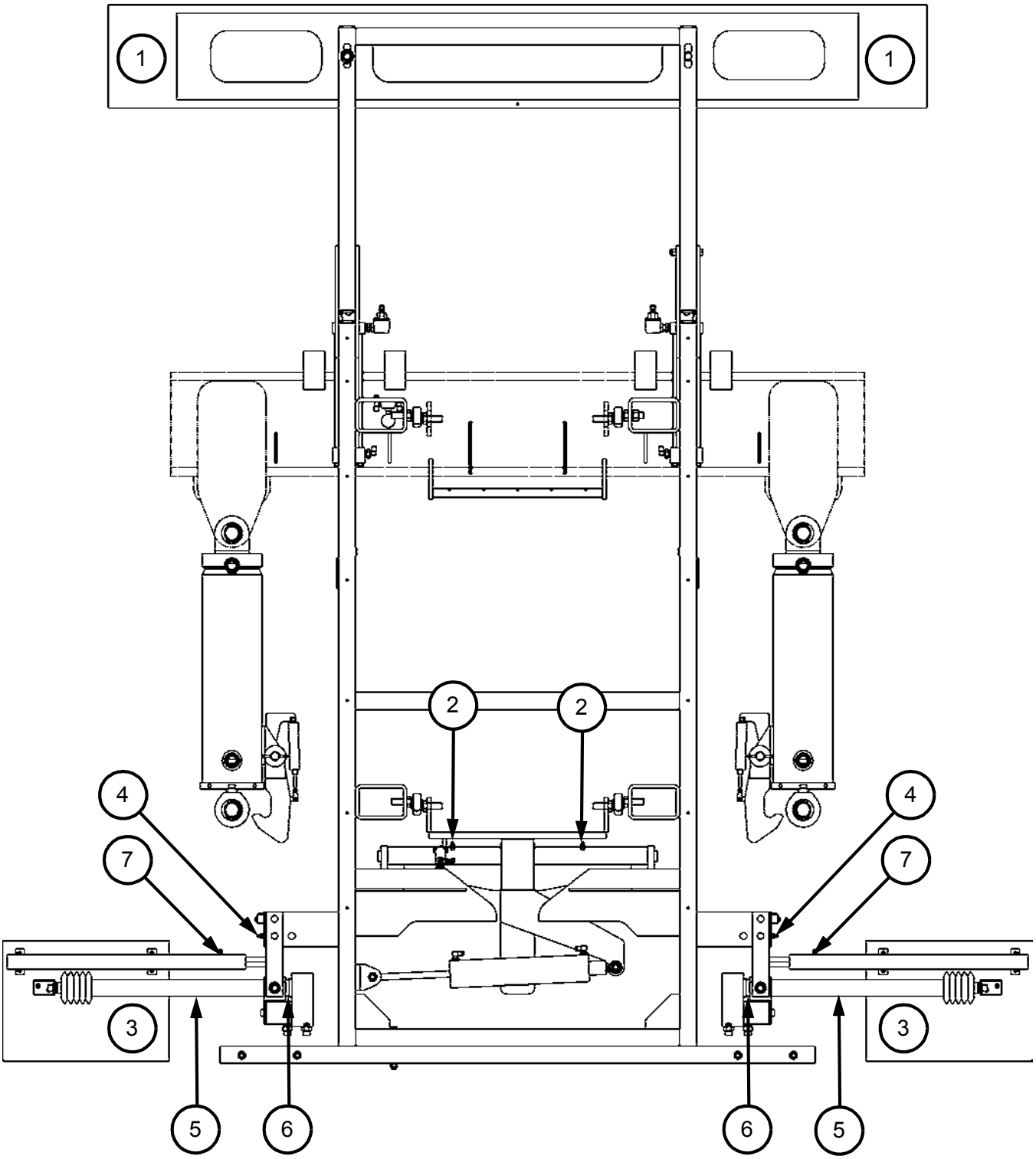

10.12 Surfacing System

WARNING

- **REFER TO ENERGY CONTROL PROCEDURE TO REMOVE ALL ENERGY SOURCES FROM MACHINE BEFORE PERFORMING MAINTENANCE, OR MAKING ADJUSTMENTS OR REPAIRS TO MACHINE.**
- **BE AWARE OF ALL PINCH POINTS AND KEEP ALL PARTS OF BODY AWAY.**

FAILURE TO HEED THESE WARNINGS COULD RESULT IN SEVERE BODILY INJURY.

10.12.1 Surfacing Receivers - See Figure 10-16

1. The surfacing receivers are located on the rear of the machine. The surfacing receivers consists of the following:

   (1) Surfacing Receivers (1 left and 1 right)
   (2) Surfacing Receivers Actuators (1 per each side)
   (3) Surfacing Actuators Lube (1 point per each side)
   (4) Surfacing Receivers Guide Rods Lube (1 point per each side)

10.12.2 Surfacing Receivers Lube - See Figure 10-16

1. Lubricate the left and right surfacing receivers actuators (3) and guide rods (4) weekly or every 50 operating hours. See Figure 10-1 - Service Chart for lubricant specifications.

10.12 Surfacing System

FIGURE 10-16
SURFACING RECEIVER GUIDE RODS

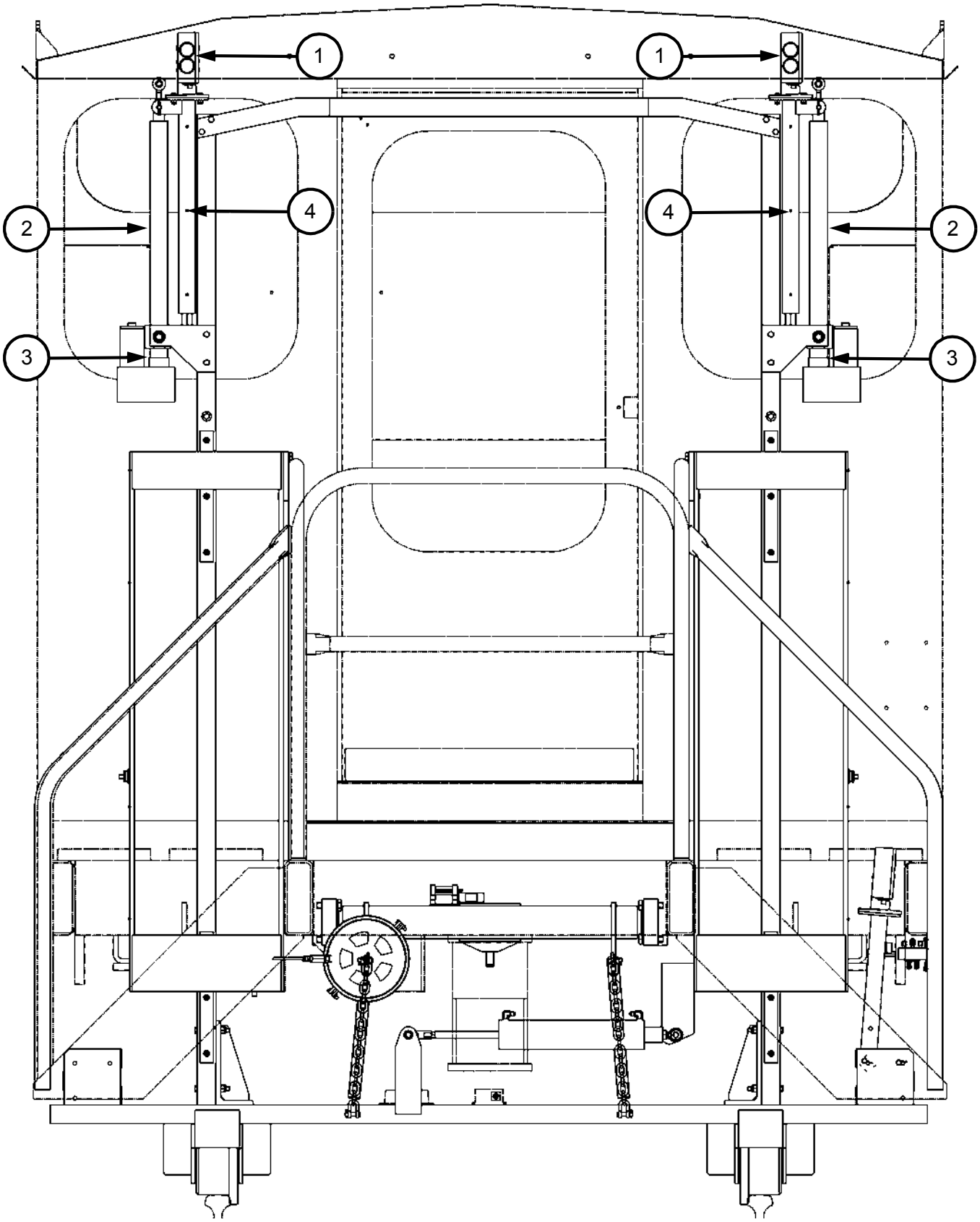

Notes:

10.13 Hydraulic System

WARNING

- **REFER TO ENERGY CONTROL PROCEDURE TO REMOVE ALL ENERGY SOURCES FROM MACHINE BEFORE PERFORMING MAINTENANCE, OR MAKING ADJUSTMENTS OR REPAIRS TO MACHINE.**

- **BE AWARE OF ALL PINCH POINTS AND KEEP ALL PARTS OF BODY AWAY.**

- **DO NOT TOUCH OR SERVICE ENGINE COMPONENTS, EXHAUST COMPONENTS, RADIATOR, PUMP DRIVE, OIL COOLER, HYDRAULIC PUMPS, MOTORS, VALVES, AIR COMPRESSOR, ETC. WHEN THEY ARE HOT. HOT SURFACES CAN CAUSE SERIOUS BURNS.**

- **WHEN REMOVING HYDRAULIC LINES, FITTINGS OR COMPONENTS:**
  - **ALWAYS WEAR APPROPRIATE PERSONAL SAFETY EQUIPMENT.**
  - **DEPRESSURIZE HYDRAULIC SYSTEM. ESCAPING FLUID CAN WHIP HOSES AND EXPEL FITTINGS OR COMPONENTS AT HIGH VELOCITY.**
  - **NEVER REMOVE LINES, FITTINGS OR COMPONENTS WHEN HYDRAULIC FLUID IS HOT. HOT HYDRAULIC FLUID CAN CAUSE SERIOUS BURNS.**
  - **REMOVE LINES, FITTINGS OR COMPONENTS SLOWLY TO RELEASE ANY TRAPPED PRESSURE.**
  - **IF INJURY RESULTS FROM ESCAPING FLUID, SEE A DOCTOR AT ONCE; SERIOUS REACTION OR INFECTION MAY RESULT IF PROPER MEDICAL ATTENTION IS NOT OBTAINED IMMEDIATELY.**

- **WHEN CLEANING OIL COOLER FINS USING WATER HOSE OR COMPRESSED AIR:**
  - **ALWAYS WEAR APPROPRIATE PERSONAL SAFETY EQUIPMENT.**
  - **NEVER EXCEED RECOMMENDED AIR OR WATER PRESSURES.**
  - **NEVER LOOK INTO AIR OR WATER JETS OR DIRECT THEM AT ANYONE.**

FAILURE TO HEED THESE WARNINGS COULD RESULT IN SEVERE BODILY INJURY.

10.13 Hydraulic System

10.13.1 Hydraulic System

1. Care should be taken to keep the hydraulic system and fluid free of dust, water, sealing compounds and other foreign matter.

2. The hydraulic fluid should be tested semi-annually or every 500 operating hours to ensure that the fluid is free of contaminants and that it meets recommended specifications. See Maintenance - Hydraulic Fluid Sample Valve Option.

3. If the hydraulic fluid turns dark or becomes milky colored, the system should be drained, flushed, and filled with clean, new fluid as soon as possible. Dark fluid is an indication that the hydraulic system temperature has been too high. Milky colored fluid is an indication of water mixed with the hydraulic fluid. In either case the lubricating properties of the fluid are significantly reduced. Determine and correct these problems before resuming operation. Continued use will lead to premature failure of hydraulic components.

10.13.2 Hydraulic System Depressurizing

1. The hydraulic system must be depressurized when a hydraulic circuit needs to be broken to repair or replace a hose, component, pump, etc.

2. Refer to Energy Control Procedure to remove machine from energy source when performing maintenance, or making adjustments or repairs to the machine. See General Information - Energy Control Procedure.

3. Move the appropriate control valve handle, switch, etc. back and forth to relieve any hydraulic pressure trapped between the valve and cylinder, motor, etc.

   Note: It is recommended to depressurize the air system also. See Maintenance - Air System Depressurizing.

10.13 Hydraulic System

10.13.3 Hydraulic Fluid Specifications

1. Use Hydrex MV36 (#4001738) hydraulic fluid or hydraulic fluid that meets or exceeds ISO-46 specifications:

Hydrex MV36 Hydraulic Fluid Specifications

Physical Properties	English	Metric
Start Up Temperature	-31° F	-31.6° C
Operating Temperature	0° to 151° F	-18° to 66° C
Viscosity @ 100° F / 40° C	152 SUV	32.3 cSt
Viscosity @ 210° F / 100° C	47 SUV	6.3 cSt
Viscosity Index	148	148
Pour Point	-54° F	-48° C
Flash Point	439° F	-48° C

2. Most major oil companies can supply satisfactory hydraulic fluids. The hydraulic fluid must provide a high level of anti-wear protection. Refer to Figure 10-17 - ISO Viscosity Grade Chart to select the proper ISO viscosity grade of hydraulic fluid.

Note: Never use brake fluid in place of hydraulic fluid.

FIGURE 10-17
ISO VISCOSITY GRADE CHART

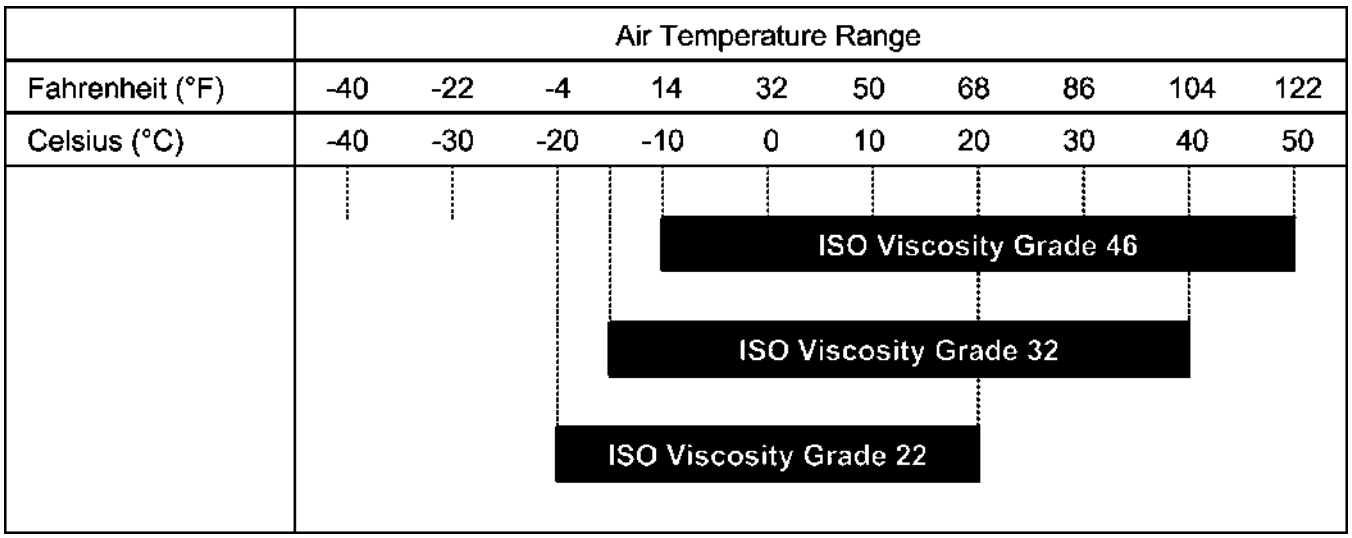

10.13 Hydraulic System

10.13.4 Hydraulic Reservoir - See Figure 10-18

1. The hydraulic reservoir and electric fill pump are located ahead of the engine on the front of the machine. The hydraulic reservoir and electric fill pump consist of the following:

   (1) Hydraulic Reservoir
   (2) Hydraulic Reservoir Fluid Level / Temperature Gauge
   (3) Electric Fill Pump
   (4) Electric Fill Pump Switch
   (5) Electric Fill Pump Fill Coupler
   (6) Electric Fill Pump Fill Filters (2 filters)
   (7) Hydraulic Reservoir Drain Plugs (2 plugs)
   (8) Hydraulic Fluid Sample Valve Option

10.13.5 Hydraulic Reservoir Fluid Level - See Figure 10-18

1. Check the fluid level of the hydraulic reservoir daily or every 10 operating hours. Maintain the level at 1/2 - 3/4 full in the fluid level gauge sight glass (2) with all of the machine components raised and locked in the Travel position.

2. If the hydraulic fluid is low, hydraulic fluid can be added to the hydraulic reservoir using the Electrical Fill Pump and Coupler. See Maintenance - Electric Fill Pump Option.

   Note: Never add hydraulic fluid to the reservoir by any other means than through the electric fill pump. The hydraulic fluid that is being added to the reservoir will be filtered as it passes through the hydraulic fill filters. Do not overfill the reservoir.

3. If it is necessary to drain the fluid out of the reservoir (1), the drain plugs (7) are located on the bottom of the reservoir. Make sure the fluid collection container capacity is large enough to hold the fluid being drained. Be sure to catch all fuel in a leakproof container and to properly dispose of the drained fuel.

   a. See Maintenance - Fluid Drains for the location of the remote hydraulic reservoir drain valve, if so equipped.

10.13 Hydraulic System

FIGURE 10-18
HYDRAULIC RESERVOIR - ELECTRIC FILL PUMP AND SAMPLE VALVE

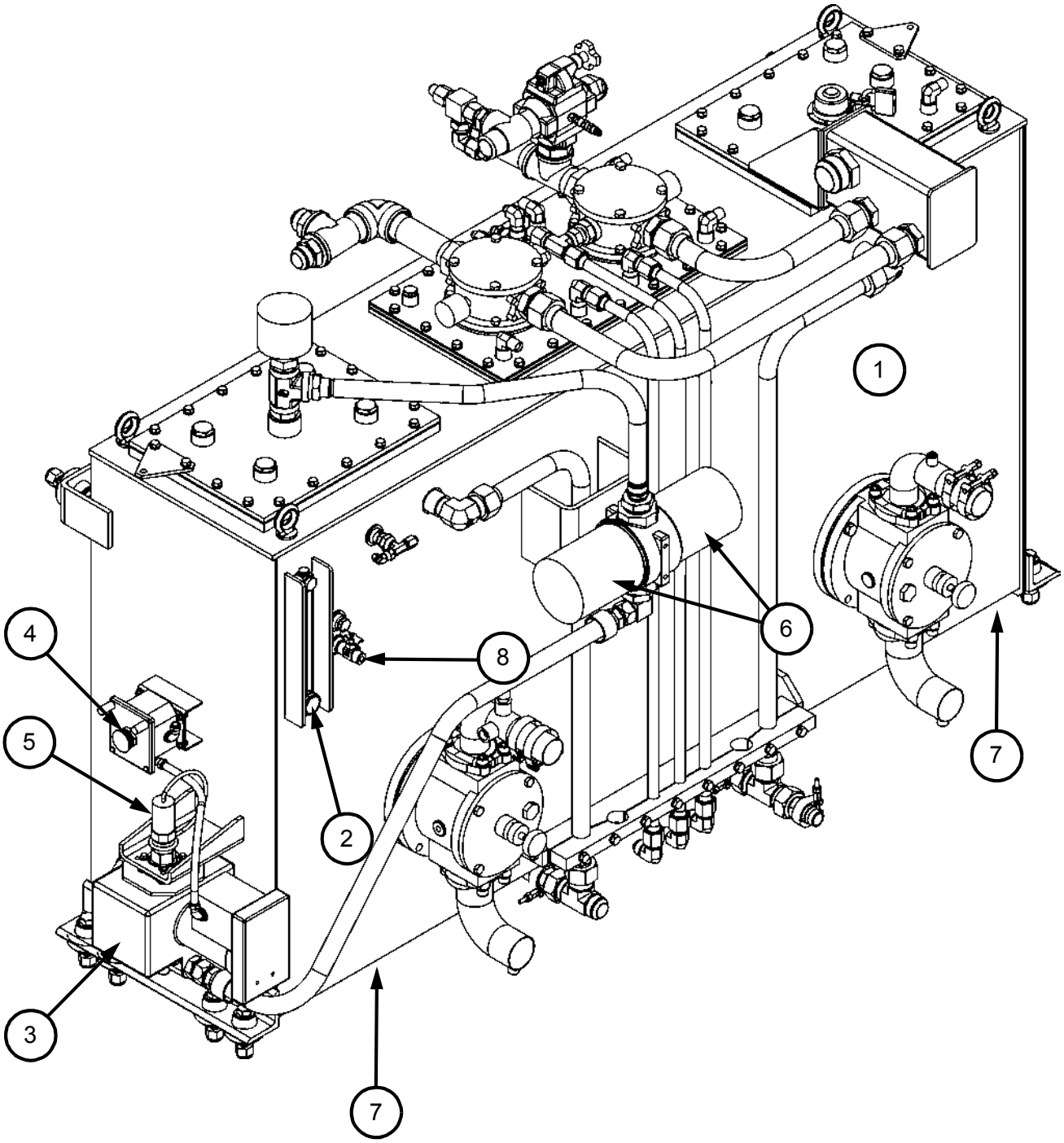

10.13 Hydraulic System

10.13.6 Electric Fill Pump Option - See Figure 10-18

1. Clean the end of the hydraulic fluid supply fill hose thoroughly of all oil, dirt, grease, etc. Connect the end of the hydraulic fluid supply fill hose to the fill pump coupler (5). Be sure to use clean hydraulic fluid that meets or exceeds the specifications listed. See Maintenance - Hydraulic Fluid Specifications.

2. Unlock the fill pump switch (44). Push and hold the switch to fill the reservoir until hydraulic fluid is 1/2 to 3/4 full in the gauge sight glass (3). When the reservoir is filled to the proper operating level, release the switch (4). Lock the fill pump switch (4).

3. Disconnect the end of the hydraulic fluid supply fill hose from the fill pump coupler (5). Be sure to catch all hydraulic fluid from the fill hose in a leak-proof container. Wipe the end of the fill hose off, wind up and store on the hydraulic fluid supply.

10.13.7 Hydraulic Fluid Sample Valve Option - See Figure 10-18

1. The hydraulic fluid sample valve (8) is located on the left rear side of the hydraulic reservoir. The hydraulic fluid should be at operating temperature when obtaining a hydraulic fluid sample.

2. Hold a sample container under the sample valve (8). Open the sample valve (8) to drain approximately 200 milliliters (6 - 7 ounces) of fluid into the sample container. Then close the sample valve (8). Seal the sample container.

3. Send the sample container of hydraulic fluid to a testing lab to have the sample tested for particle count, lubricating properties, water content, etc.

    a. If the results of the hydraulic fluid sample meet ISO specifications, the condition of the hydraulic fluid is acceptable and can continued to be used.
    b. If the results of hydraulic fluid sample do not meet ISO specifications, the condition of the hydraulic fluid is not acceptable and continued use will lead to premature failure of the hydraulic components. The hydraulic system should be drained, flushed, and filled with clean, new fluid as soon as possible.

10.13 Hydraulic System

10.13.8 Hydraulic Oil Cooler - See Figure 10-19

1. The hydraulic oil cooler (1) is located on the front of the fuel tank. Clean the oil cooler (1) fins weekly or every 50 operating hours using a pressurized air hose or pressure washer to remove any accumulated dust, debris, etc. Use care not to damage the fins with excessive pressure or by directing the air or water jet sideways across the fins. Clean the fins in the opposite direction of normal air flow. Do not exceed an air pressure of 120 PSI (8.27 bar).

FIGURE 10-19
HYDRAULIC OIL COOLER

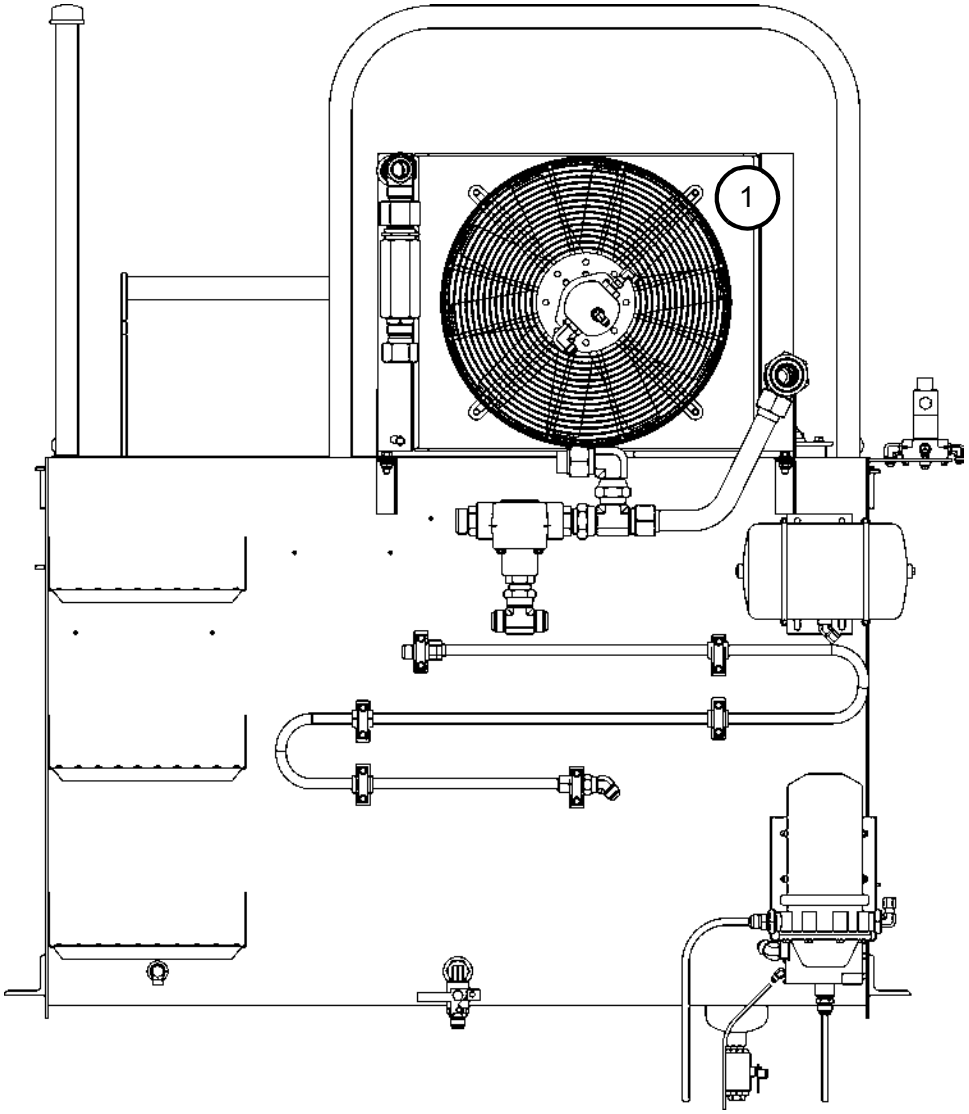

10.13 Hydraulic System

10.13.9 Hydraulic Reservoir Filters - See Figure 10-20

1. The hydraulic reservoir filters are located on the hydraulic reservoir. The hydraulic reservoir filters consist of the following:

   (1) Hydraulic Reservoir Return Filters (2 filters)
   (2) Hydraulic Reservoir Suction Strainers (2 filters)
   (3) Hydraulic Reservoir Breather Filter (1 filter)
   (4) Hydraulic Reservoir Fill Filters Option (2 filters)

2. The hydraulic reservoir return filters (1) are equipped with filter indicators. Change the hydraulic reservoir return filters (1) elements monthly or every 200 operating hours, or sooner if indicated to do so by the filter indicator.

3. Remove and clean the hydraulic reservoir suction strainers (2) annually or every 1,000 operating hours.

4. Change the hydraulic reservoir breather filter (3) annually or every 1,000 operating hours.

5. Change the hydraulic reservoir fill filters (4) elements annually or every 1,000 operating hours.

10.13 Hydraulic System

FIGURE 10-20
HYDRAULIC RESERVOIR FILTERS

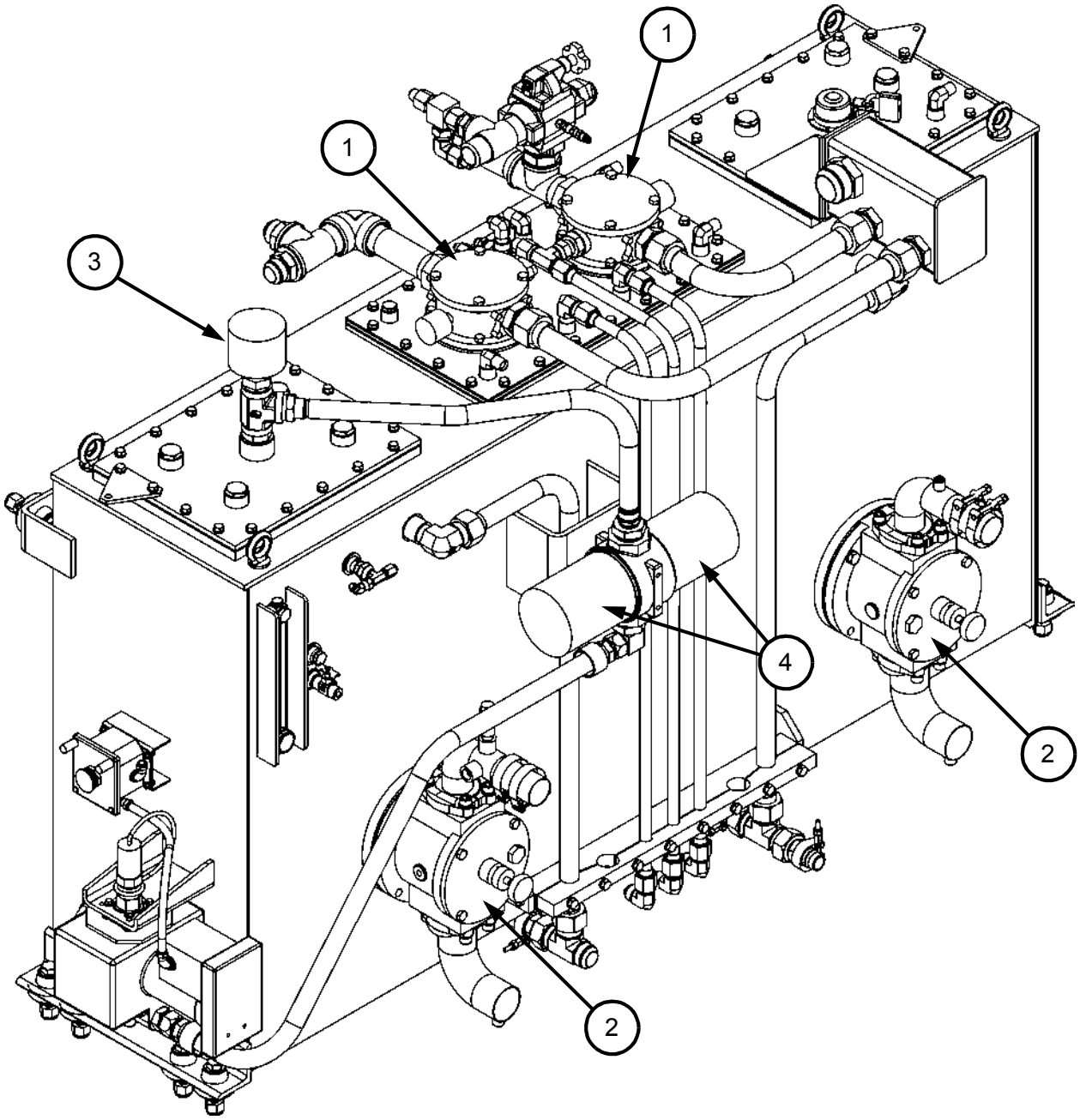

10.13 Hydraulic System

10.13.10 Hydraulic Pressure Filters Option - See Figure 10-21

1. The hydraulic pressure filters are located on a bracket on the rear of the hydraulic reservoir. The hydraulic pressure filters consist of the following:

   (1) P1 Hydraulic Pressure Filter (P1 Pump)
   (2) P2 Hydraulic Pressure Filter (P2 Pump)
   (3) P3 Hydraulic Pressure Filter (P3 Pump)
   (4) P4 Hydraulic Pressure Filter (P4 Pump)
   (5) P5 Hydraulic Pressure Filter (P5 Pump)
   (6) P6 Hydraulic Pressure Filter (P6 Pump)
   (7) P7 Hydraulic Pressure Filter (P7 Pump)

2. All of the hydraulic pressure filters (1 - 7) are equipped with filter indicators that are monitored by the Jupiter Control System.

3. Change all of the hydraulic pressure filters (1 - 7) elements semi-annually or every 500 operating hours, or sooner if indicated to do so by the filter indicator or the Jupiter Control System.

10.13.11 Hydraulic Test Valves / Sensor Option - See Figure 10-21

1. The hydraulic pump test valves and sensor are located on the right side of the hydraulic reservoir. The hydraulic pump test valves and sensor consist of the following:

   (8) P1 Hydraulic Test Valve (P1 Pump)
   (9) P2 Hydraulic Test Valve (P2 Pump)
   (10) P3 Hydraulic Test Valve (P3 Pump)
   (11) P4 Hydraulic Test Valve (P4 Pump)
   (12) P5 Hydraulic Test Valve (P5 Pump)
   (13) P6 Hydraulic Test Valve (P6 Pump)
   (14) Hydraulic Test Sensor (P1 - P6 Pumps)

2. The hydraulic pump test valves (8 - 13) are used to direct the applicable pump flow to the hydraulic test sensor (14) to check the pump pressure, flow, etc.

3. A hydraulic test monitor can be connected to hydraulic test sensor (14) to check the applicable pump pressure, flow, temperature, particle count, etc.

   a. Read and understand all operating instructions in the Operator's Manual provided with the hydraulic test monitor.
   b. Understand the machine's operation and hydraulic systems before connecting the hydraulic test monitor to the hydraulic test station.

10.13 Hydraulic System

FIGURE 10-21
HYDRAULIC PRESSURE FILTERS - PUMP VALVES - TEST SENSOR

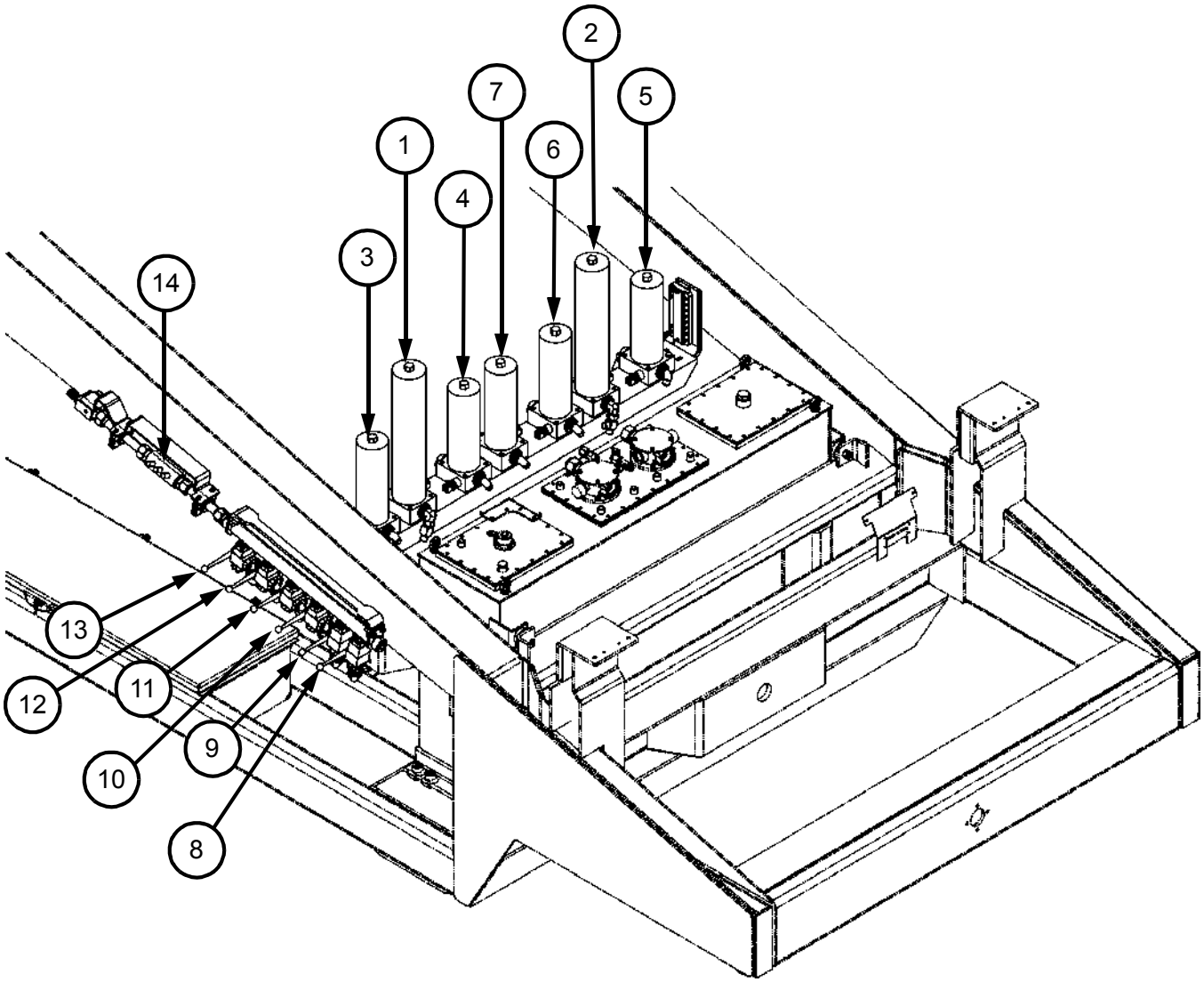

10.14 Pneumatic System

WARNING

- **REFER TO ENERGY CONTROL PROCEDURE TO REMOVE ALL ENERGY SOURCES FROM MACHINE BEFORE PERFORMING MAINTENANCE, OR MAKING ADJUSTMENTS OR REPAIRS TO MACHINE.**

- **BE AWARE OF ALL PINCH POINTS AND KEEP ALL PARTS OF BODY AWAY.**

- **DO NOT TOUCH OR SERVICE ENGINE COMPONENTS, EXHAUST COMPONENTS, RADIATOR, PUMP DRIVE, OIL COOLER, HYDRAULIC PUMPS, MOTORS, VALVES, AIR COMPRESSOR, ETC. WHEN THEY ARE HOT. HOT SURFACES CAN CAUSE SERIOUS BURNS.**

- **WHEN REMOVING AIR LINES, FITTINGS OR COMPONENTS, THE FOLLOWING PROCEDURE MUST BE ADHERED TO:**
  - **ALWAYS WEAR APPROPRIATE PERSONAL SAFETY EQUIPMENT.**
  - **DEPRESSURIZE AIR SYSTEM. ESCAPING AIR CAN WHIP HOSES AND EXPEL FITTINGS OR COMPONENTS AT HIGH VELOCITY.**
  - **REMOVE LINES, FITTINGS OR COMPONENTS SLOWLY TO RELEASE ANY TRAPPED PRESSURE.**
  - **NEVER EXCEED RECOMMENDED AIR PRESSURES.**
  - **NEVER LOOK INTO AIR JETS OR DIRECT THEM AT ANYONE.**

  FAILURE TO HEED THESE WARNINGS COULD RESULT IN SEVERE BODILY INJURY.

10.14.1 Air System Depressurizing - See Figure 10-22

1. The air system must be depressurized when an air circuit needs to be opened to repair or replace a hose, component, compressor, etc.

2. The air system vent / drain cable (1) is located behind the left front wheel of the machine. To depressurize the air system, pull and hold the cable until all pressure has escaped. Then release the cable.

10.14.2 Air System Draining - See Figure 10-22

1. The air system reservoir should be drained daily or once every 10 operating hours.

2. The air system vent / drain cable (1) is located behind the left front wheel of the machine. To drain the reservoir of moisture, pull and hold the cable until all moisture has drained. Then release the cable.

10.14 Pneumatic System

10.14.3 Air System Filter - See Figure 10-22

1. The air system filter is (2) is located behind the left front wheel of the machine. Change the air system filter (2) element monthly or once every 200 operating hours.

FIGURE 10-22
AIR SYSTEM VENT / DRAIN VALVE

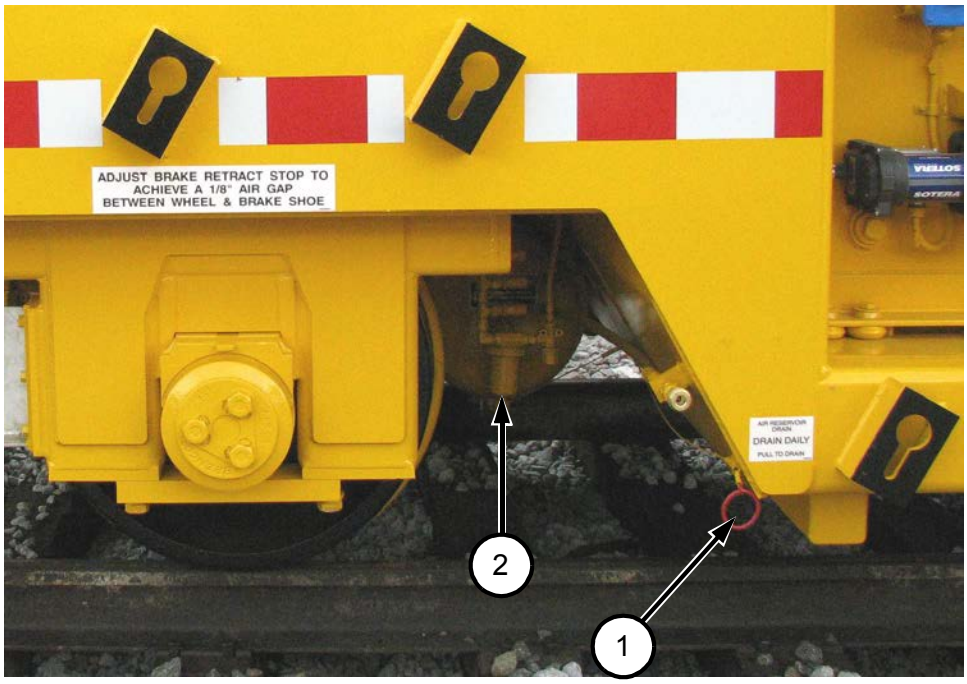

10.14 PneumaticSystem

10.14.4 Air Dryer / Purge Tank - See Figure 10-23

1. The air dryer (1) and purge tank (2) are located on the back side of the fuel tank on the right side of the machine. Change the air dryer desiccant semi-annually or once every 500 operating hours. Follow the instructions packed with the new desiccant to replace the cartridge.

FIGURE 10-23
AIR DRYER AND PURGE TANK

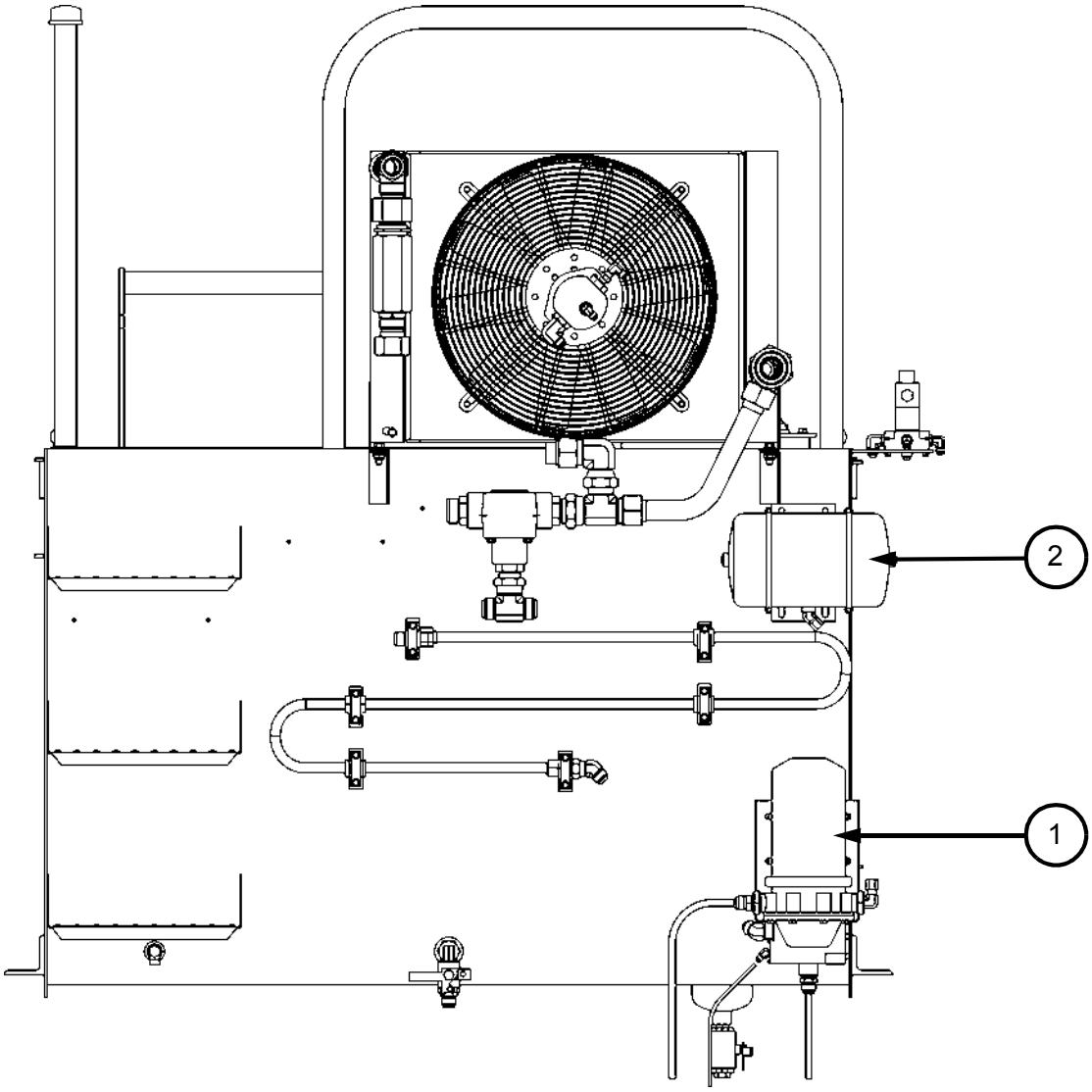

10.14 Pneumatic System

10.14.5 Air Compressor - See Figure 10-24

1. The air compressor (1) is located on the right side of the engine. The air compressor is lubricated by the engine oil and cooled by the engine coolant. The air compressor uses filter air from the engine air cleaner.

FIGURE 10-24
AIR COMPRESSOR

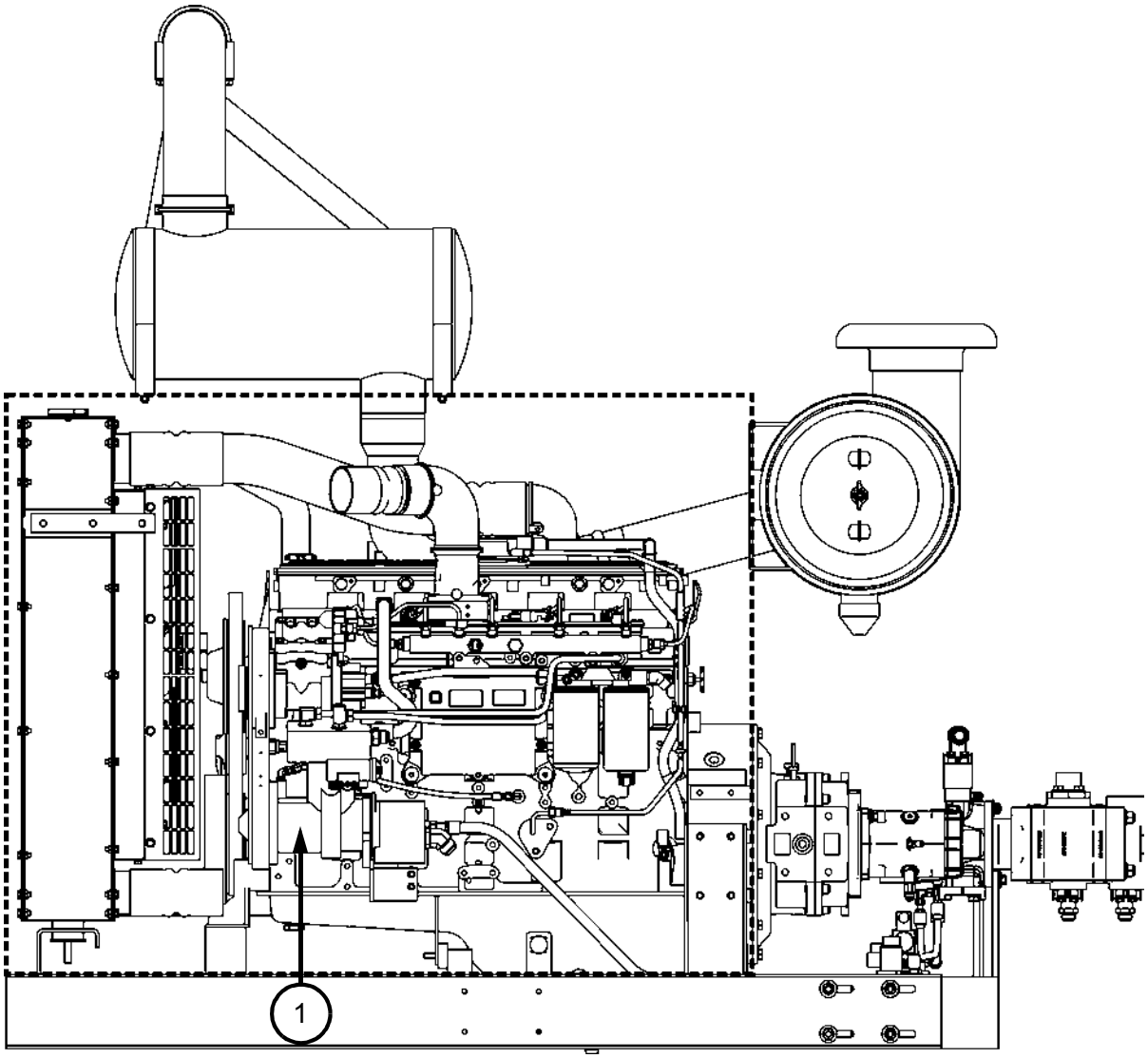

10.15 Welding Pre-Cautions

WARNING

- **REFER TO ENERGY CONTROL PROCEDURE TO REMOVE ALL ENERGY SOURCES FROM MACHINE BEFORE PERFORMING MAINTENANCE, OR MAKING ADJUSTMENTS OR REPAIRS TO MACHINE. FAILURE TO COMPLY COULD RESULT IN SEVERE BODILY INJURY.**

Important: **Always disconnect Electronic Control Unit (ECU) connectors and engine control system to machine ground before welding on engine or machine. High currents or electro-static discharge in electronic components from welding may cause permanent damage.**

10.15.1 Cummins Tier III Engine

1. Refer to Energy Control Procedure to remove all energy sources from machine before performing maintenance, or making adjustments or repairs to the machine. See General Information - Energy Control Procedure.

2. Disconnect the machine negative (-) ground cable from the batteries. See Maintenance - Battery Cables Connect / Disconnect.

3. Disconnect all of the connectors from the ECU (Electronic Control Unit). See the Engine Manual for the location of the ECU and connectors.

4. Connect the welder ground close to the welding point and be sure the ECU or other electronic components are not in the ground path.

10.16 Batteries

DANGER

- **STOP ENGINE BEFORE CHECKING BATTERIES ELECTROLYTE LEVEL. DO NOT CHECK OR FILL BATTERIES ELECTROLYTE LEVEL NEAR AN OPEN FLAME, SPARKS, OR WHEN SMOKING. BATTERY FUMES ARE FLAMMABLE AND/OR EXPLOSIVE, AND IF IGNITED WILL RESULT IN SEVERE BODILY INJURY OR DEATH.**

WARNING

- **REFER TO ENERGY CONTROL PROCEDURE TO REMOVE ALL ENERGY SOURCES FROM MACHINE BEFORE PERFORMING MAINTENANCE, OR MAKING ADJUSTMENTS OR REPAIRS TO MACHINE.**
- **BE AWARE OF ALL PINCH POINTS AND KEEP ALL PARTS OF BODY AWAY.**
- **THE FOLLOWING MUST BE ADHERED TO WHEN WORKING ON OR AROUND BATTERIES:**
  - **ELECTROLYTE SOLUTION MUST NOT COME IN CONTACT WITH SKIN OR EYES. ELECTROLYTE SOLUTION IS AN ACID AND MAY CAUSE BURNS OR BLINDNESS.**
  - **IF CONTACT IS MADE WITH ELECTROLYTE SOLUTION, FLUSH CONTACTED AREA WITH WATER IMMEDIATELY. SEEK MEDICAL ATTENTION IMMEDIATELY IF EYES ARE AFFECTED.**
  - **NEVER WEAR JEWELRY WHEN WORKING AROUND BATTERIES. BATTERIES PRODUCE LEVELS OF ELECTRICAL CURRENT HIGH ENOUGH TO CAUSE SERIOUS BURNS.**

FAILURE TO HEED THESE WARNINGS COULD RESULT IN SEVERE BODILY INJURY.

10.16.1 Battery Maintenance - See Figure 10-25

1. Refer to Energy Control Procedure to remove all energy sources from machine before performing maintenance, or making adjustments or repairs to the machine. See General Information - Energy Control Procedure.

2. The batteries (1) are located inside of the lockable Battery Compartment on the left side of the engine. Two 12 volt batteries (1) are connected in series to provide a 24 volt electrical system.

   a. If the batteries are maintenance free type, the electrolyte level can not be checked.
   b. If the batteries are not maintenance free type, check the electrolyte level weekly or once every 50 operating hours. If the electrolyte level is low, fill each cell to the bottom of the filler neck with distilled water.

3. Clean the battery (1) terminals and cable clamps when required. Coat the battery terminals and cable clamps with grease or other suitable product to reduce corrosion.

10.16 Batteries

10.16.2 Battery Replacement - See Figure 10-25

1. When battery (1) replacement becomes necessary, it is recommended to replace both batteries at the same time.

2. Replacement batteries Harsco Rail #2013244 (two required) should meet or exceed the original battery specifications; amps, cranking power, etc.

FIGURE 10-25
BATTERY COMPARTMENT

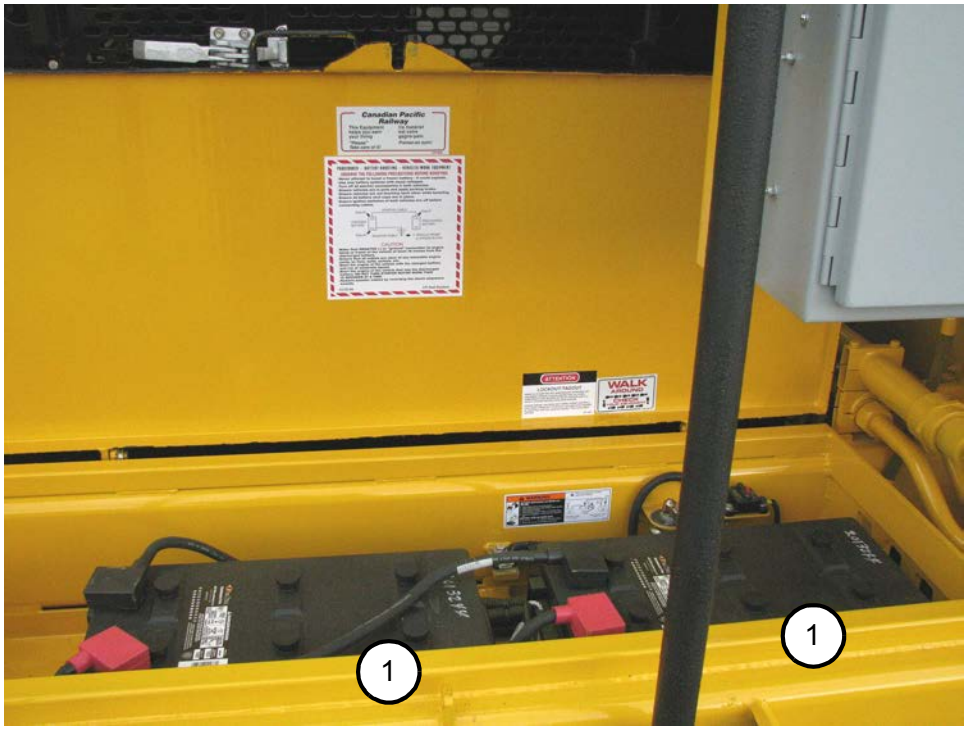

10.16 Batteries

10.16.3 Battery Charging - See Figure 10-26

1. **Important**: A 24 volt battery charger must be used to charge the batteries.

2. Connect the (+) positive cable (usually red) of the battery charger to the (+) positive post (B) on battery #1. Then connect the (-) negative cable (usually black) of the battery charger to a good (-) negative ground on the machine frame. Plug the battery charger into an electrical power source and turn it on. Make sure the battery charger indicates that it is charging.

3. After the batteries are charged, shut the battery charger off and unplug it from the electrical power source. Disconnect the (+) positive cable (usually red) of the battery charger from the (+) positive post (B) on battery #1. Then disconnect the (-) negative cable (usually black) of the battery charger from the (-) negative ground on the machine frame.

10.16.4 Battery Jumping - See Figure 10-26

1. **Important:** A 24 volt power source must be used to jump-start the engine. The master switch must be turned on when jump-starting the engine.

2. Connect one end of the (+) positive jumper cable (usually red) to the (+) positive post (B) on battery #1 and the other end to the (+) positive post of the 24 volt power source. Then connect one end of the (-) negative jumper cable (usually black) to a good (-) negative ground on the machine frame and the other end to a good (-) negative ground on the power source frame.

3. Allow the power source to operate for a few minutes. Then attempt to start the machine's engine in a normal starting procedure.

4. After the engine starts, disconnect one end of the (+) positive jumper cable (usually red) from the (+) positive post (B) on battery #1 and the other end from the (+) positive post of the 24 volt power source. Then disconnect one end of the (-) negative jumper cable (usually black) from the (-) negative ground on the machine frame and the other end from the (-) negative ground on the power source frame.

10.16 Batteries

10.16.5 Battery Cables Connect / Disconnect - See Figure 10-26

1. Refer to Energy Control Procedure to remove all energy sources from machine before performing maintenance, or making adjustments or repairs to the machine. See General Information - Energy Control Procedure.

   Note: Two 12 volt batteries are connected in series to provide a 24 volt electrical system

   Disconnecting Battery Cables

1. Disconnect the (-) negative cable (machine ground) from battery #2 (-) negative post (A).

2. Disconnect the (+) positive cable (master disconnect switch) from battery #1 (+) positive post (B).

3. Disconnect the jumper cable (between batteries) from battery #2 (+) positive post (C) and then from battery #1 (-) negative post (D).

   Connecting Battery Cables

1. Connect the jumper cable (between batteries) to battery #1 (-) negative post (D) and then to battery #2 (+) positive post (C).

2. Connect the (+) positive cable (master disconnect switch) to battery #1 (+) positive post (B).

3. Connect the (-) negative cable (machine ground) to battery #2 (-) negative post (A).

10.16 Batteries

FIGURE 10-26
BATTERY CABLES

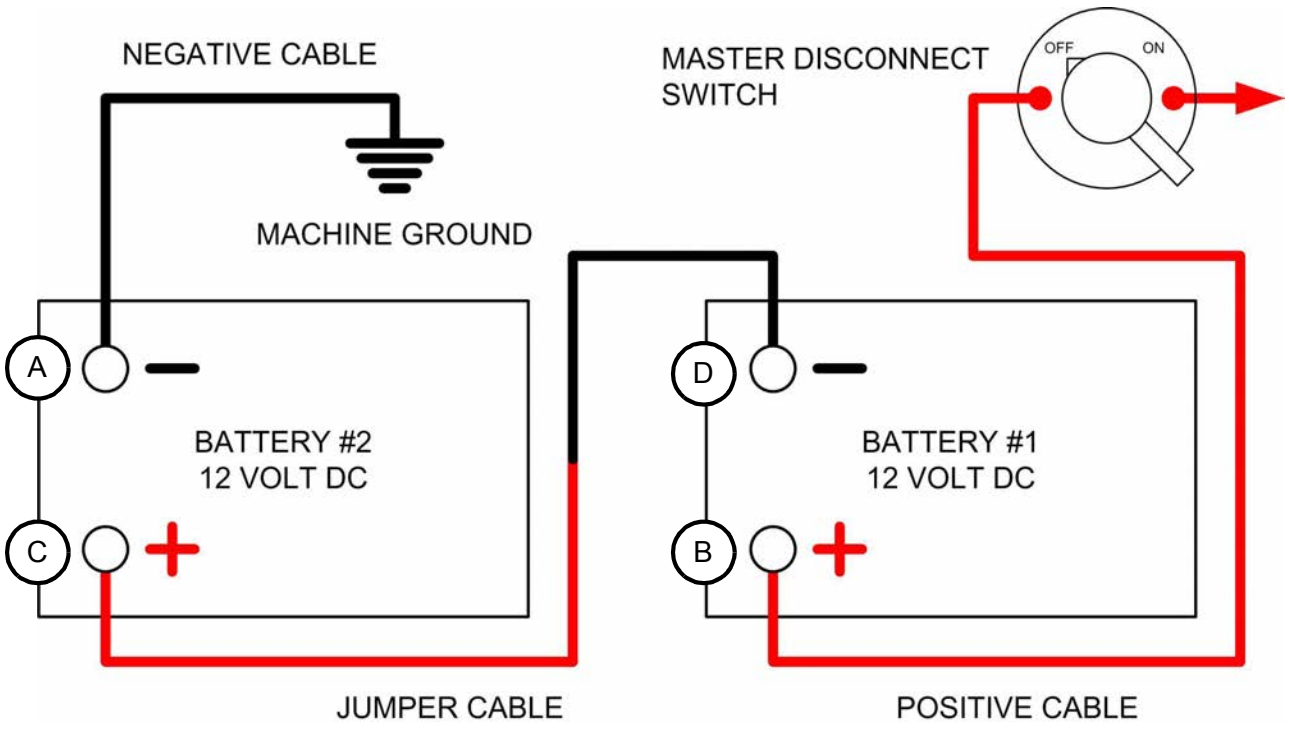

10.17 Hoses and Fittings

WARNING

- **REFER TO ENERGY CONTROL PROCEDURE TO REMOVE ALL ENERGY SOURCES FROM MACHINE BEFORE PERFORMING MAINTENANCE, OR MAKING ADJUSTMENTS OR REPAIRS TO MACHINE.**
- **BE AWARE OF ALL PINCH POINTS AND KEEP ALL PARTS OF BODY AWAY.**
- **ALL HOSES AND FITTINGS ON THIS MACHINE MUST COMPLY WITH SAE J1273 - RECOMMENDED PRACTICES FOR HYDRAULIC HOSE ASSEMBLIES. SEE APPENDIX C - SAE STANDARDS. IF ANY DEFECTS ARE EVIDENT, REPAIR OR REPLACE HOSE AS NECESSARY.**
- **ALL HOSES AND FITTINGS ON THIS MACHINE MUST BE TIGHTENED TO TORQUE SPECIFIED IN HYDRAULIC HOSES AND FITTINGS TORQUE REQUIREMENTS TABLE. SEE APPENDIX A - TORQUE / CONVERSION TABLES.**

  FAILURE TO HEED THESE WARNINGS COULD RESULT IN SEVERE BODILY INJURY.

10.17.1 Inspection, Maintenance, Replacement and Installation

1. Refer to Energy Control Procedure to remove all energy sources from machine before performing maintenance, or making adjustments or repairs to the machine. See General Information - Energy Control Procedure.

2. The inspection, maintenance, replacement and installation of air and hydraulic hose assemblies and fittings on this machine must conform with SAE J1273 - Recommended Practices for Hydraulic Hose Assemblies. See Appendix C - SAE Standards.

3. Inspect all air and hydraulic hoses, fittings and components on the machine daily or every 10 operating hours for damage, wear, leaks, etc. If any of these conditions are evident, repair or replace the component as necessary.

4. When connecting hydraulic hoses and fittings, they must be tightened to the torque specified in the Hydraulic Hoses and Fittings Torque Requirements Table to prevent leaks. See Chapter 9 - Torque / Conversion Tables.

10.17 Hoses and Fittings

10.17.2 Hose Band - See Figure 10-27

1. Most Harsco Rail original and replacement hose assemblies have a hose band displaying the date of manufacture and the Harsco Rail part number. See illustration for explanation of the hose band.

2. The hose assembly illustrated in the example was manufactured in February 2011 and is Harsco Rail #188662.

FIGURE 10-27
HOSE BAND

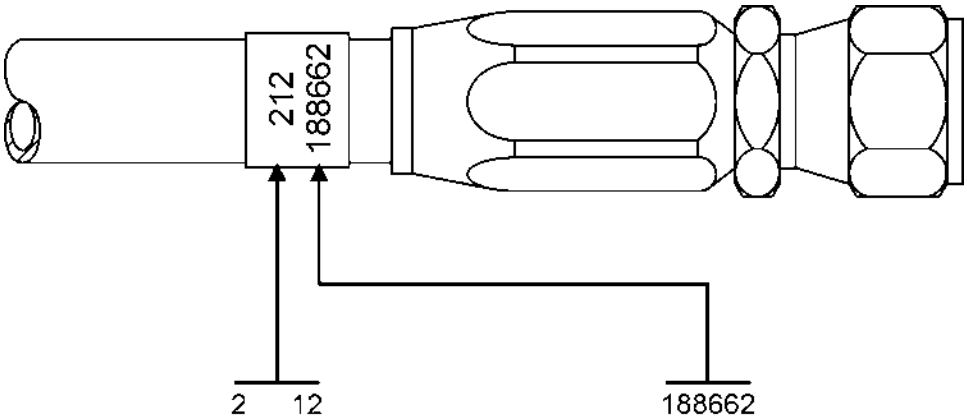

	Month	Year	Harsco Rail
January	= 1	Last Two Digits	Part Number
February	= 2	Of The Year Of	
March	= 3	Manufacture	
April	= 4		
May	= 5		
June	= 6		
July	= 7		
August	= 8		
September	= 9		
October	= O		
November	= N		
December	= D		

10.18 Fluid Drains

WARNING

- **REFER TO ENERGY CONTROL PROCEDURE TO REMOVE ALL ENERGY SOURCES FROM MACHINE BEFORE PERFORMING MAINTENANCE, OR MAKING ADJUSTMENTS OR REPAIRS TO MACHINE.**
- **DO NOT TOUCH OR SERVICE ENGINE COMPONENTS, EXHAUST COMPONENTS, RADIATOR, PUMP DRIVE, OIL COOLER, HYDRAULIC PUMPS, MOTORS, VALVES, AIR COMPRESSOR, ETC. WHEN THEY ARE HOT. HOT SURFACES CAN CAUSE SERIOUS BURNS.**
- **BE AWARE OF ALL PINCH POINTS AND KEEP ALL PARTS OF BODY AWAY.**

FAILURE TO HEED THESE WARNINGS COULD RESULT IN SEVERE BODILY INJURY.

10.18.1 Fluid Drains

1. The fluid systems (engine oil, coolants, lubricants, hydraulic fluids, etc.) have fluid drains (plugs, caps, etc.) located near the component (engine, radiator, reservoir, etc.) on the machine.

2. Use leak proof containers when draining fluids. Before draining any fluids, check the capacity of the sump, reservoir, tank, etc. Make sure that the container the fluid is being drained into has enough capacity to hold the fluid being drained.

3. Place an appropriately sized drain pan, barrel, etc. under the fluid drain plug, cap, etc. Clean around the drain plug, cap, etc. and then remove it. After draining the fluid, clean the fluid drain plug, cap, etc. and re-install.

4. Do not pour waste onto the ground, down a drain, or into any water source. Inquire on the proper way to recycle or dispose of waste according to applicable Federal, State and/or Local regulations.

10.18 Remote Fluid Drains

10.18.2 Remote Fluid Drains Option - See Figure 10-28

1. The remote fluid drains option is located on the right front side of the machine next to the hydraulic reservoir. The remote fluid drains consist of the following:

   (1) Hydraulic Fluid Drain Cap / Shutoff Valve
   (2) Engine Oil Drain Cap / Shutoff Valve
   (3) Fuel Tank Drain Cap / Shutoff Valve

2. Use leak proof containers when draining fluids. Before draining any fluids, check the capacity of the sump, reservoir, tank, etc. Make sure that the container the fluid is being drained into has enough capacity to hold the fluid being drained.

3. Place an appropriately sized drain pan, barrel, etc. under the fluid drain cap. Clean around the drain cap and then remove it. Then open the shutoff valve. After draining the fluid, close the shutoff valve. Clean the fluid drain cap and re-install.

4. Do not pour waste onto the ground, down a drain, or into any water source. Inquire on the proper way to recycle or dispose of waste according to applicable Federal, State and/or Local regulations.

FIGURE 10-27
REMOTE FLUID DRAINS

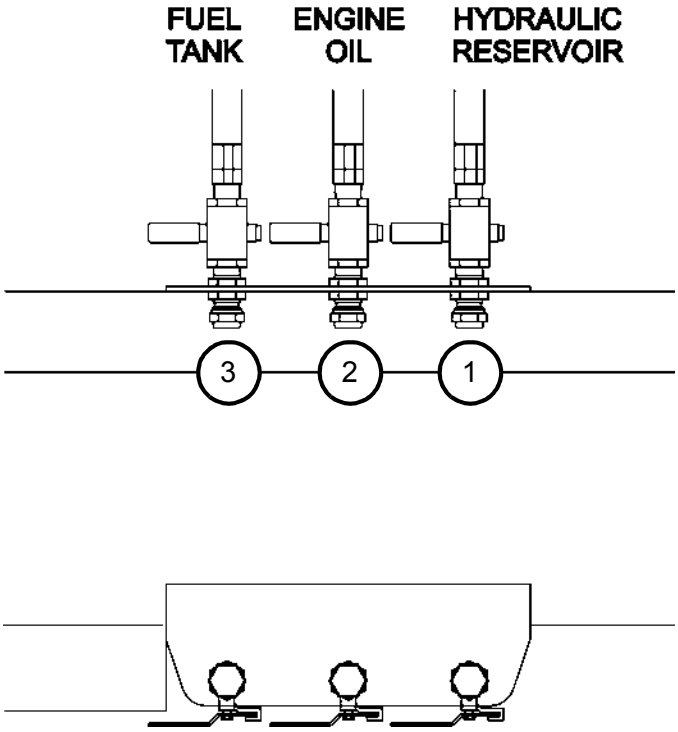

10.19 Cab Air Conditioner / Pressurizer

WARNING

- **REFER TO ENERGY CONTROL PROCEDURE TO REMOVE ALL ENERGY SOURCES FROM MACHINE BEFORE PERFORMING MAINTENANCE, OR MAKING ADJUSTMENTS OR REPAIRS TO MACHINE.**
- **BE AWARE OF ALL PINCH POINTS AND KEEP ALL PARTS OF BODY AWAY.**

FAILURE TO HEED THESE WARNINGS COULD RESULT IN SEVERE BODILY INJURY.

10.19.1 Cab Air Conditioner / Pressurizer Maintenance - See Figures 10-28 and 10-29

1. The cab air conditioner (1) / pressurizer (2) unit is located on the right rear side of the cab. The heater portion of the unit is supplied with hot coolant from the engine that has shutoff valves (3) on the coolant supply lines. The air condition portion of the unit is supplied freon from the air conditioner compressor that is driven by a hydraulic motor (4) mounted on the backside of the air compressor on the left side of the engine.

FIGURE 10-28
CAB AIR CONDITIONER / PRESSURIZER UNIT

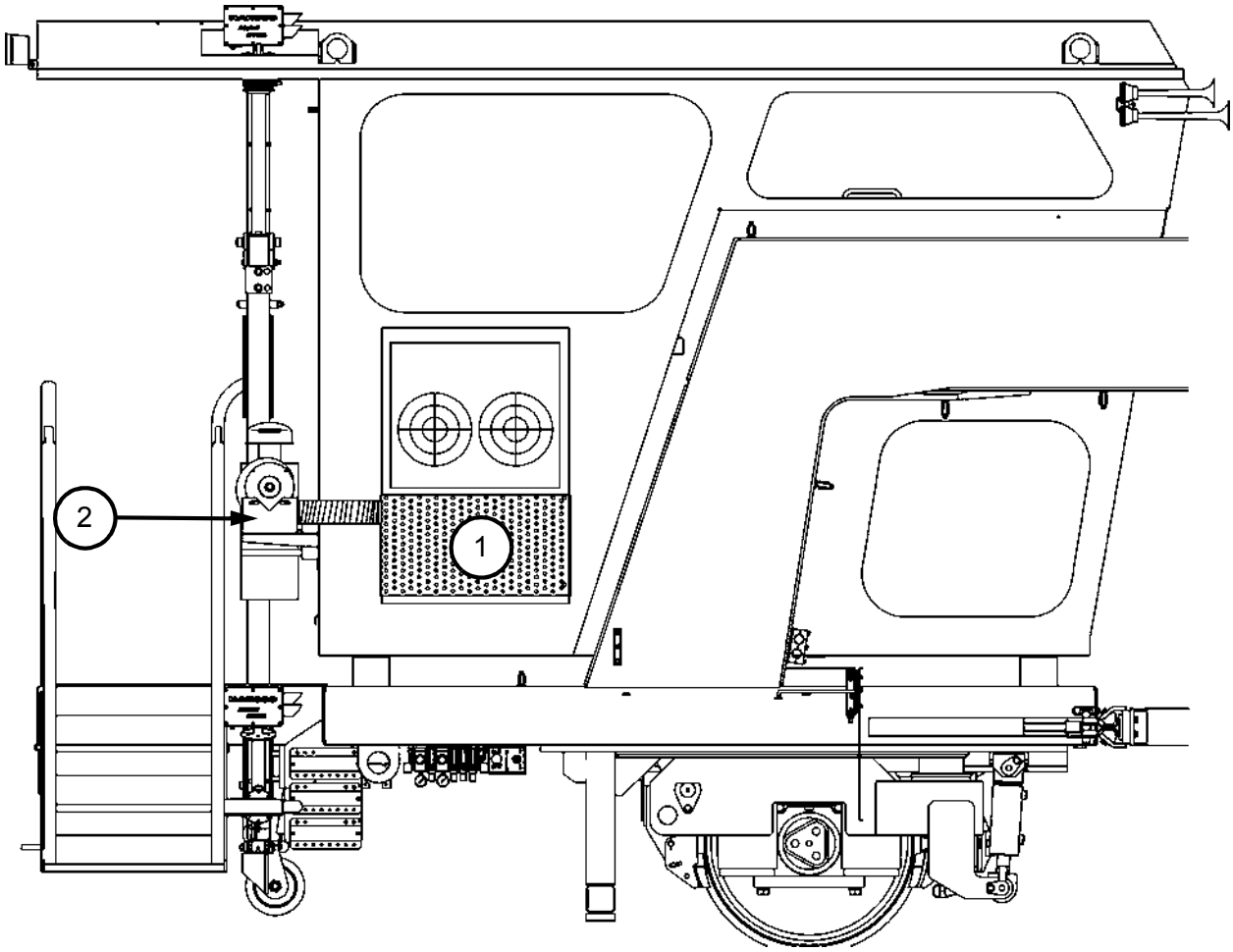

10.19 Cab Air Conditioner / Pressurizer

10.19.1 Cab Air Conditioner / Pressurizer Maintenance - See Figures 10-28 and 10-29

2. **Important:** If the air conditioner unit's (1) freon is to be checked and/or charged, it must be serviced by an authorized service technician.

3. Clean the air conditioner unit's (1) fan filter and evaporator, condenser, heater coils weekly or every 50 operating hours using a pressurized air hose or pressure washer to remove any accumulated dust, debris, etc. Use care not to damage the coil fins with excessive pressure or by directing the air or water jet sideways across the coil fins. Clean the coil fins in the opposite direction of normal air flow.

4. Replace the cab pressurizer unit's (2) air cleaner filter elements monthly or every 200 operating hours.

FIGURE 10-29
HEATER SHUTOFF VALVE / AC HYDRAULIC MOTOR

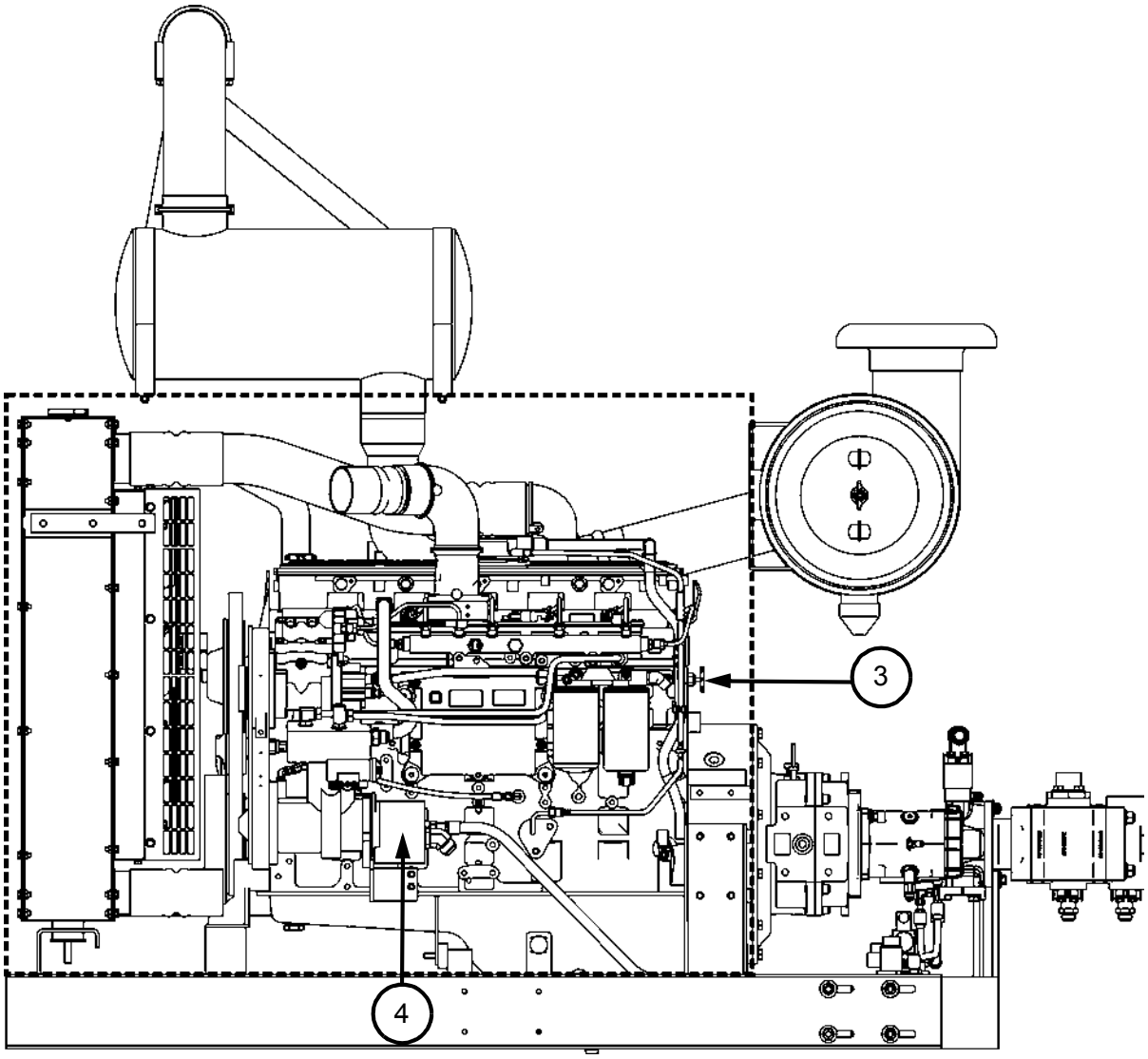

10.20 Bolt Torque Requirements

WARNING

- **REFER TO ENERGY CONTROL PROCEDURE TO REMOVE ALL ENERGY SOURCES FROM MACHINE BEFORE PERFORMING MAINTENANCE, OR MAKING ADJUSTMENTS OR REPAIRS TO MACHINE.**
- **BE AWARE OF ALL PINCH POINTS AND KEEP ALL PARTS OF BODY AWAY.**

FAILURE TO HEED THESE WARNINGS COULD RESULT IN SEVERE BODILY INJURY.

CAUTION

- **CHECK FOR LOOSE AND MISSING BOLTS AND NUTS DAILY. KEEP THEM TIGHTENED TO TORQUE VALUES SPECIFIED IN TABLES. SEE CHAPTER 9 - TORQUE / CONVERSION TABLES. IF BOLT REPLACEMENT BECOMES NECESSARY, REPLACE BOLT WITH EQUAL SAE GRADE NUMBER BOLT.**

FAILURE TO HEED THESE CAUTIONS COULD RESULT IN BODILY INJURY AND/OR PROPERTY DAMAGE.

1. Refer to Energy Control Procedure to remove all energy sources from machine before performing maintenance, or making adjustments or repairs to the machine. See General Information - Energy Control Procedure.

2. Check for loose and missing bolts and nuts daily or every 10 operating hours. Keep them tightened to the torque values specified in the Bolt Torque Tables. See Chapter 9 - Torque / Conversion Tables for the bolt torque requirements table and grade identification markings used by manufacturers.

10.21 Brake Actuators

WARNING

- **REFER TO ENERGY CONTROL PROCEDURE TO REMOVE ALL ENERGY SOURCES FROM MACHINE BEFORE PERFORMING MAINTENANCE, OR MAKING ADJUSTMENTS OR REPAIRS TO MACHINE.**
- **BE AWARE OF ALL PINCH POINTS AND KEEP ALL PARTS OF BODY AWAY.**
- **BRAKE ACTUATOR SPRING CHAMBERS ARE UNDER COMPRESSED SPRING FORCE. DO NOT ATTEMPT TO DISASSEMBLE ACTUATOR.**

FAILURE TO HEED THESE WARNINGS COULD RESULT IN SEVERE BODILY INJURY.

1. Refer to Energy Control Procedure to remove all energy sources from machine before performing maintenance, or making adjustments or repairs to the machine. See General Information - Energy Control Procedure.

2. **Important:** The brake actuator spring chambers are under compressed spring force. Do not attempt to disassemble the brake actuator.

10.22 Cleaning Machine

WARNING

- **REFER TO ENERGY CONTROL PROCEDURE TO REMOVE ALL ENERGY SOURCES FROM MACHINE BEFORE PERFORMING MAINTENANCE, OR MAKING ADJUSTMENTS OR REPAIRS TO MACHINE.**
- **BE AWARE OF ALL PINCH POINTS AND KEEP ALL PARTS OF BODY AWAY.**

FAILURE TO HEED THESE WARNINGS COULD RESULT IN SEVERE BODILY INJURY.

1. Refer to Energy Control Procedure to remove all energy sources from machine before performing maintenance, or making adjustments or repairs to the machine. See General Information - Energy Control Procedure.

2. It is recommended to keep the machine work stations clean and clear of oil, mud, dirt, debris, tools, ice, snow, etc. Keep all cylinders, valves, hoses, etc. clean of oil, mud, dirt, debris, ice, snow, etc. which could ruin the seals and damage the internal parts.

3. When cleaning the machine, seal all electrical boxes, projector and receivers, and components to help prevent shorts in the electrical circuits.

4. Follow all Federal, State and/or Local regulations on cleaning of machines, disposal of waste, etc.

APPENDIX A
JUPITER II DIAGNOSTICS

JUPITER II

DESCRIPTION AND DIAGNOSTICS

© 2010 HARSCO RAIL, HARSCO CORPORATION

ISSUED 8 - 2010

BULLETIN 1606

CAUTION

- **THIS MANUAL CONTAINS VITAL INFORMATION FOR THE SAFE USE AND EFFICIENT OPERATION OF THIS MACHINE. CAREFULLY READ THIS MANUAL BEFORE USING THE MACHINE. FAILURE TO ADHERE TO THE INSTRUCTIONS COULD RESULT IN BODILY INJURY AND/OR PROPERTY DAMAGE.**

HARSCO RAIL is the brand name and trademark of products manufactured by Harsco Rail, Harsco Corporation.

A MANUAL MUST REMAIN WITH THE MACHINE. Additional or replacement manuals may be obtained by calling or writing Harsco Rail, Harsco Corporation.

All information, illustrations and specifications in this manual are based on the latest information available at the time of publication. Harsco Rail, Harsco Corporation reserves the right to make changes at any time without notice.

FACILITY LOCATIONS

Harsco Rail
415 North Main Street
Fairmont, MN
56031-1837
Tel: (507) 235-3361
Fax: (507) 235-7370

Harsco Rail
2401 Edmund Road, Box 20
Cayce-West Columbia, SC
29171-0020
Tel: (803) 822-9160
Fax: (803) 822-7471

Harsco Rail
200 South Jackson Road
Ludington, MI
49431
Tel: (231) 843-3431
Fax: (231) 843-4830

Harsco Rail
Giltway, Giltbrook
Nottingham, NG16 2GQ
England
Tel: 0115 938 7000
Fax: 0115 938 7001

Harsco Rail
4 Strathwyn Street, PO Box 5287
Brendale, Queensland 4500
Australia
Tel: 61 7 205 6500
Fax: 61 7 205 7369

Printed in U.S.A.

TABLE OF CONTENTS

1.1 Introduction 4

2.1 Jupiter Features 5
2.1.1 Comprehensive Diagnostics 5
2.1.2 Simplified Electrical System 5
2.1.3 Improved Reliability 5
2.1.4 Scalable Platform 5

3.1 Jupiter Control System 6
3.1.1 Jupiter Control System Description 6
3.1.2 Jupiter Diagnostics Overview 8
3.1.3 Jupiter Software Information 9
3.1.4 JAM (Jupiter Application Master) 10
3.1.4.1 Memory Card 12
3.1.4.2 Battery Replacement 14
3.1.5 J42 Board 16
3.1.5.1 J42 Board Status LEDs 18
3.1.5.2 Troubleshooting 19
3.1.6 The Jupiter "Daisy-Chain" System 21
3.1.7 Network Cable Identification 24
3.1.8 Network Cable Connections 26
3.1.9 Network Module Status LEDs 28
3.1.10 Analog Input Module 30
3.1.11 Digital Input / Output Module 32
3.1.12 HD Digital Input / Output Module 34
3.1.13 Digital to Analog Output Module 36
3.1.14 Power Distribution Tee 38
3.1.15 Network Terminator 40
3.1.16 Pass Through Splitter 42
3.1.17 Cross Over Splitter 44
3.1.18 Jupiter Breakout Box 46

4.1 Jupiter Diagnostic Panels 50
4.1.1 Accessing Diagnostic Panels 50
4.1.2 Network Diagnostic Button / Panel 52
4.1.3 Network View Diagnostic Button / Panel 54
4.1.4 Thumbnail View Diagnostic Panel 56
4.1.5 Analog Input Module Diagnostic Panel 60
4.1.5.1 Analog Input Module Can 2 Diagnostic Panel 62
4.1.6 Digital Input / Output Module Diagnostic Panel 64
4.1.6.1 Digital Input / Output Module With Scanner Board 68
4.1.7 HD (High Density) Digital Input / Output Module Diagnostic Panel 70
4.1.7.1 HD (High Density) Digital Input / Output Module Diagnostic Test Panel 74
4.1.7.2 HD (High Density) Digital Input / Output Module Diagnostic Fault Panel 76
4.1.7.3 HD (High Density) Digital Input / Output Module Can 2 Diagnostic Panel 78
4.1.8 Digital to Analog Output Module Diagnostic Panel 80
4.1.8.1 Open Loop Mode Only 80

4.1.8.2 Open Loop Mode And / Or Closed Loop Mode 82
4.1.9 I/O Information Panel 86
4.1.10 I/O Graphing Panel 88

NOTES

NOTES

1.1 Introduction

Jupiter II is Harsco Rail's newest generation of our Jupiter Control System developed to meet the demanding computer control requirements of railway maintenance equipment.

Jupiter II enhances the proven performance, ruggedness, reliability, speed, simplicity and diagnostic capability of the Jupiter Control System. The distributed I/O intelligent control system uses the Jupiter Application Master (JAM) to communicate with the Control Area Network (CAN) I/O Modules strategically positioned around the machine to be in close proximity to the devices with which they interact. Industrial network cables connect the CAN I/O modules.

One of the many features of Jupiter II is the comprehensive and powerful diagnostic capabilities to assist when isolating and correcting failures and knowing that every component is under continuous diagnostic scrutiny from the moment the computer is booted up. With these features, it is frequently possible to identify problems before they become disabling.

The "plug and play" capability of Jupiter allows modules to be exchanged between completely different machines with ease. All devices that connect to the Jupiter Control System incorporate connectors to facilitate rapid field replacement. The majority of the cables in the system are identical and vary only in length. Only a few spare cables, equal in length to the longest in actual use, need be carried to make it possible to replace any cable on a machine.

2.1 Jupiter Features

2.1.1 Comprehensive Diagnostics

Jupiter diagnostic capabilities can dramatically reduce electrical troubleshooting time required to restore machine operation. The use of graphical diagnostic screens in conjunction with the diagnostic features of each Jupiter module simplifies the job of the operator or technician. Operators/technicians can rapidly locate and solve most control system problems without the use of a schematic or multi-meter.

- All output channels detect and report short circuits
- Output channels monitor and display load current in Amps
- All digital I/O channels include status LED indicators
- Module status is monitored and reported in the case of failure
- Network communication is monitored and reported in case of failure
- Graphical diagnostics screens available

2.1.2 Simplified Electrical System

The use of Jupiter remote I/O devices helps simplify electrical systems through:

- The reduction of wires and wire terminations
- The use of quick disconnect cables
- Shorter wire runs
- Only 2 primary module types
- Like module types and cables are interchangeable

2.1.3 Improved Reliability

The rugged design of the Jupiter II modules improves the reliability of the electrical control system. Jupiter II modules are built to operate at extreme temperatures of -40° C to +70° C. All modules are IP67 rated (waterproof), CE labeled and fully potted for extreme vibrations. Premolded cables and cord sets eliminate field wiring and reduce the likelihood of open and / or short circuits. Each module provides a layer of electrical (and logical) isolation from the rest of the system thereby containing problems and simplifying repair. The increased capacity of output channels handles a wide range of load conditions.

2.1.4 Scalable Platform

The modular design of the Jupiter Control System makes it possible to install Jupiter on small machines as well as large complex machines. This feature will lead to a common control system on an entire fleet of machines. The use of common control system components that are interchangeable from machine to machine enables inventory reduction, common schematics, reduced service technician training and a common set of features and diagnostic tools between a wide variety of machines.

3.1 Jupiter Control System

3.1.1 Jupiter System Description - See Figure 1

The Jupiter Control System is used to control most operating functions on the machine. The main computer (host) is the Jupiter Application Master (JAM). Each machine has its own JAM box (1) and J42 Board (2), normally located in the cab on the machine. If two machines are coupled and operating together, the JAM boxes on both machines communicate with each other through an Ethernet cable connection. Each JAM is labeled as address #1 and is connected to its own J42 Board which provides the physical connection between the JAM and the Jupiter Network Modules on the machine.

The JAM contains a microprocessor that is responsible for distributing programming information to the other Jupiter modules on the machine. Specific software for the machine is loaded into the JAM at the factory. The software can be updated by connecting a memory device to one of the USB connections or by installing a different internal memory card.

All Jupiter controlled functions are displayed on the touch screen monitor and are controlled by the computer, either manually or automatically.

The Jupiter Network Modules are located at various positions on the machine, in close proximity to the components that they control or monitor. The four types of modules used are briefly described below:

Analog Input Module: The Analog Input Module is used with analog input devices that have a varying feed-back voltage such as: engine sensors, fuel gauges, position sensors, etc.

Digital Input / Output Module: The Digital Input / Output Module is used with digital input devices that when actuated, send a power signal back to the module. Examples of these devices are: limit switches, pressure switches, etc. The Digital Input / Output Module is also used with digital output devices that have two positions (On / Off) such as: valve coils, relays, lights, alarms, etc. or proportional output (PWM) controls.

HD Digital Input / Output Module: The HD (High Density) Digital Input / Output Module is used with digital input devices that when actuated, send a power signal back to the module. Examples of these devices are: limit switches, pressure switches, etc. The HD Digital Input / Output Module is also used with digital output devices that have two positions (On / Off) such as: valve coils, relays, lights, alarms, etc.

The HD Digital Input / Output Module interfaces with machine components much the same as the standard Digital Input / Output Module. One major difference is the HD Digital Input / Output Module offers 32 channels which can be either input or output channels depending on the software programing while the standard Digital Input / Output Module has 16 input channels and 8 output channels. The other major difference is how wires are connected to the module. The standard Digital Input / Output Module has eight 5 pin M12 connectors while the HD Digital Input / Output Module has 32 connectors where wires can be connected directly.

3.1 Jupiter Control System

3.1.1 Jupiter System Description - See Figure 1

Digital to Analog Output Module: The Digital to Analog Output Module is used to drive servo valves and other devices that require a precision voltage or current input for control. These devices may be driven in "open loop" fashion, where the JAM specifies the exact output to drive, or in "closed loop" fashion, where the Digital to Analog Output Module itself is provided with feedback information used to evaluate the amount of error in its output signal relative to an output set point nominated by the JAM. Each plug on the Digital to Analog Output Module may be driven in open or closed loop fashion depending upon the application needs of the machine.

FIGURE 1
JUPITER APPLICATION MASTER (JAM) AND J42 BOARD

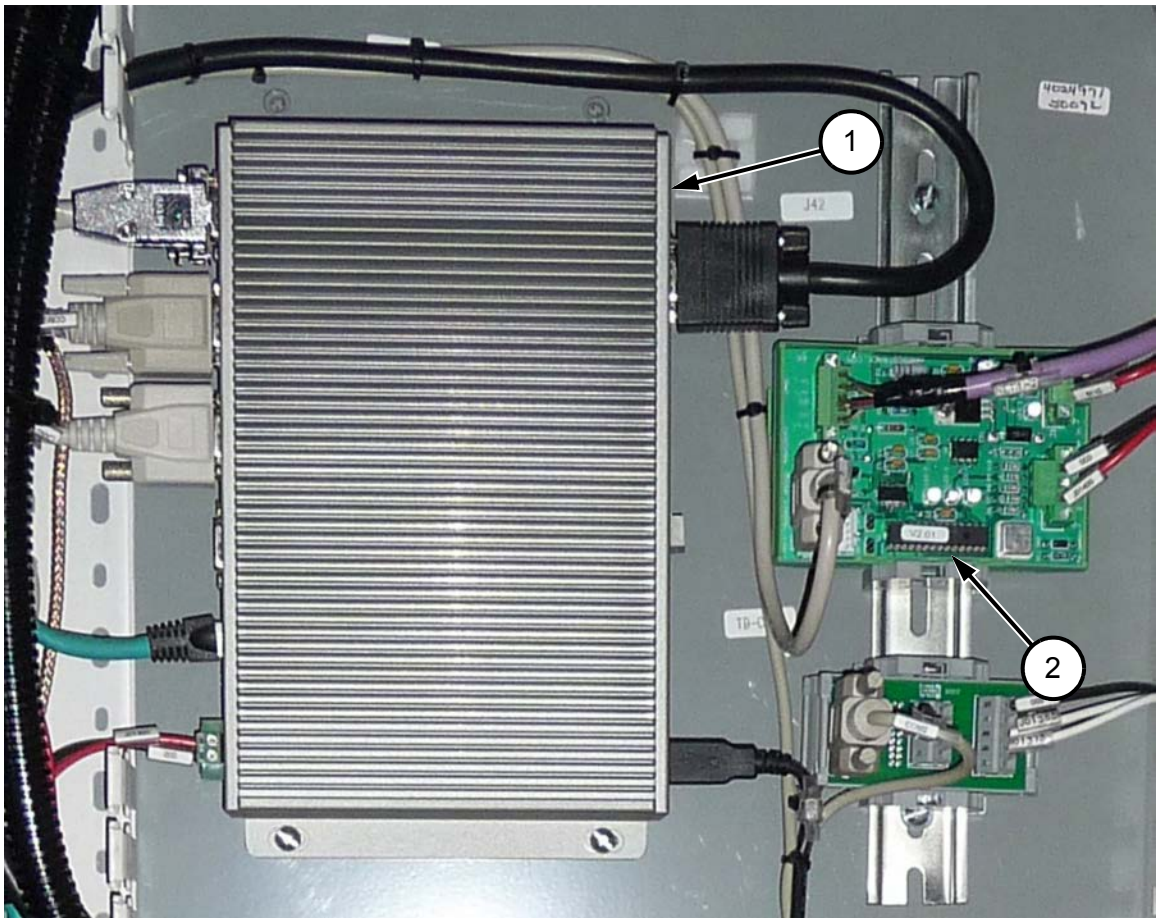

3.1 Jupiter Control System

3.1.2 Jupiter Diagnostics Overview

The diagnostic screens incorporated into the Jupiter can be used to troubleshoot electrical systems and electrical components that are controlled or monitored by Jupiter. In some applications, not all components and systems on the machine can be checked or monitored by Jupiter.

When the computer detects a fault in the Jupiter network on the machine, it will generate an alarm message that appears in the alarm panel on the computer monitor. The type of alarm message will determine the most practical troubleshooting procedure.

If an alarm message would appear such as "Low Fuel", then the first thing to check would be the fuel level in the fuel tank. If the fuel tank is not empty, then the Jupiter diagnostic screens would be used to check for short circuits, voltage problems, etc.

If an alarm message would appear such as "Output Module Open Circuit Detected", then the first thing to check would be the diagnostic screens to determine which module has the open circuit and what is causing the open circuit at that module. In most cases, when a fault occurs that can be checked by the diagnostic screens, the network diagnostic screen will automatically be displayed on the monitor. The operator can then select the detail view of the module on which the fault has occurred and determine where the open circuit is.

3.1 Jupiter Control System

3.1.3 Jupiter Software Information - See Figure 2

The Jupiter Control System software information will be displayed on the Alarm Panel on the Main Screen and is usually the first entry after a successful boot-up. The boot-up time (1), date (2), machine name or number (3), program (4), version (5), revision (6) and machine serial number (7) will be displayed. Always have this information available when contacting Harsco Rail for software assistance.

FIGURE 2
SOFTWARE INFORMATION DISPLAY

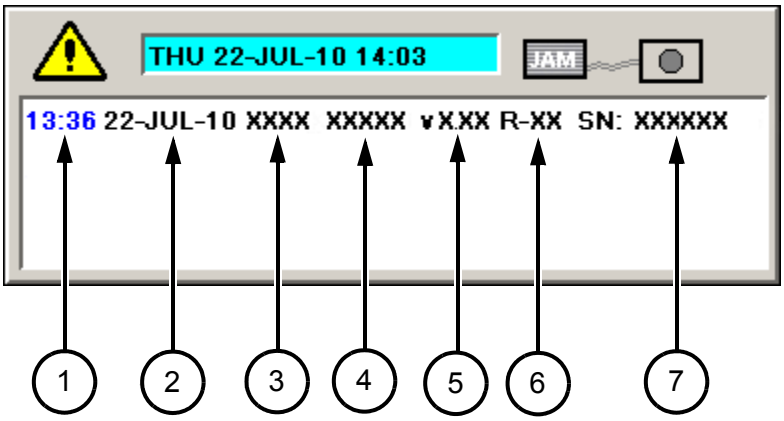

3.1 Jupiter Control System

3.1.4 JAM (Jupiter Application Master) - See Figures 3 and 4

The Jupiter Control System is used to control most operating functions on the machine. The main computer (host) is the Jupiter Application Master (JAM). The JAM box is normally located in the cab on the machine. If two machines are coupled and operating together, the JAM boxes on both machines communicate with each other through an Ether net cable connection. Each JAM is labeled as address #1 and is connected to it s own J42 Board which provides the physical connection between the JAM and the Jupiter Network Modules on the machine.

The JAM consists of the following:

(1) USB: These two connections can be used to connect USB devices to the JAM box.
(2) PC CARD: This PCMCIA memory card slot is NOT USED. An internal compact flash memory card stores the machine application software. See 3.1.4.1 Memory Card for removing or installing the compact flash memory card.
(3) RESET: The Reset Button is located inside a small hole below the PC Card eject button. It requires a tool small enough to be inserted through the hole to reset the JAM box. When the Reset Button is pressed and released, the JAM box will shut down and then reboot.
(4) POWER: This switch controls the power to the JAM box. Press the switch to power down the JAM box. Press the switch again to power up the JAM box.
(5) MIC: Microphone connection (not used).
(6) LINE IN: Audio / Video Input connection (not used).
(7) LINE OUT: Audio / Video output connection (not used).
(8) VGA: Video / Graphics connection for the Touch Screen Monitor.
(9) MS / KB: Mouse / Key Board connection (not used).
(10) COM 1: Serial port connection, dedicated to a Touch Screen Monitor (when used).
(11) COM 2: Serial port connection (machine dependent use).
(12) COM 3: Serial port connection to the Jupiter network J42 Board (when used).
(13) COM 4: Serial port connection (machine dependent use).
(14) Rx1, Rx2, Rx3 and Rx4: LED's for corresponding COM serial port. These will flash green when receiving data.
(15) Tx1, Tx2, Tx3 and Tx4: LED's for corresponding COM serial port. These will flash yellow when transmitting data.
(16) LAN 1: Ethernet connection.
(17) LAN 2: Ethernet connection.
(18) 24V - GND: Power / ground connection to the J42 Board.
(19) IDE: This LED will flash green when the compact flash memory card is transmitting and / or receiving data.
(20) BTRY: THIS LED will illuminate green when the JAM box batteries need to be replaced. See 3.1.4.2 Battery Replacement.
(21) PWR: This LED will illuminate green when 24V power is being supplied from J42 Board.

3.1 Jupiter Control System

3.1.4 JAM (Jupiter Application Master)

FIGURE 3
JAM - FRONT

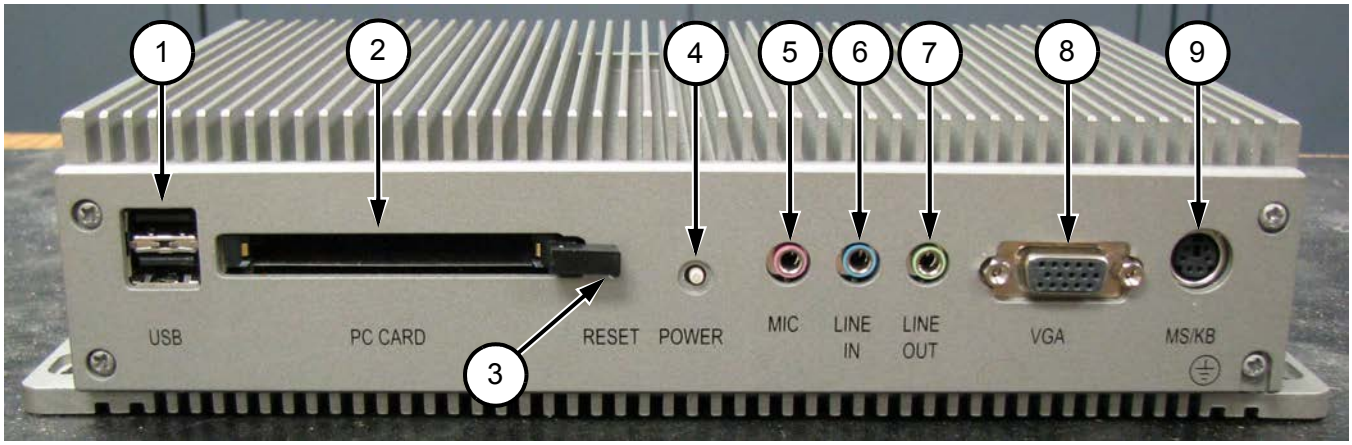

FIGURE 4
JAM - REAR

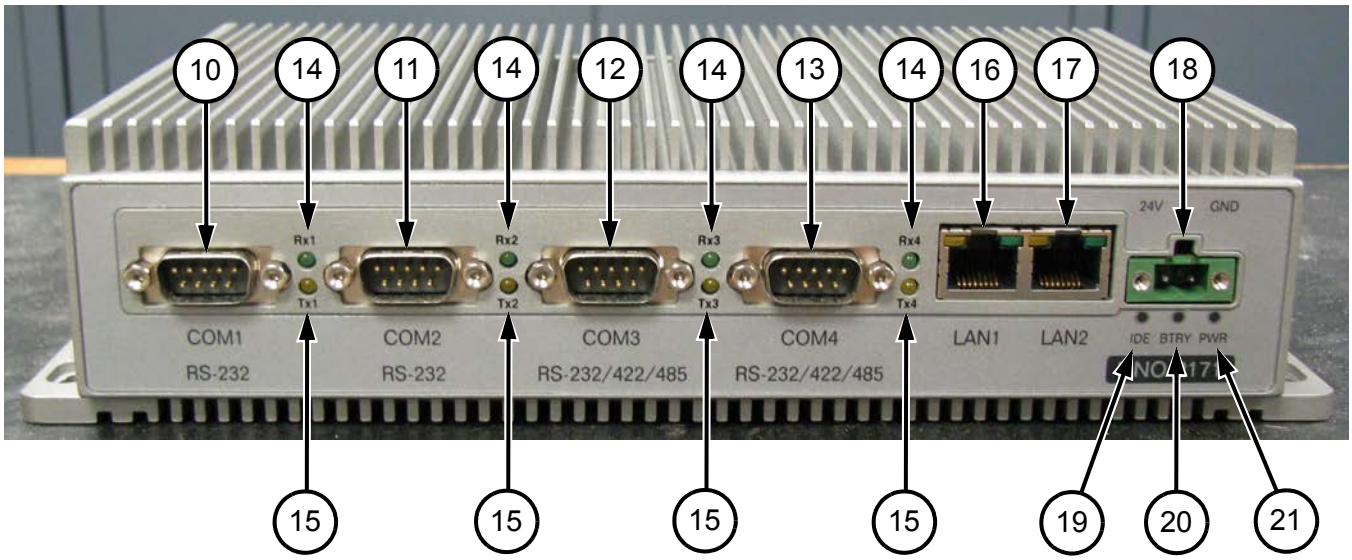

3.1 Jupiter Control System

3.1.4 JAM (Jupiter Application Master)

3.1.4.1 Memory Card - See Figures 5 and 6

The JAM box has an internal Compact Flash Memory Card. The memory card stores the operating system, bios configuration, all application programs and all data files (grinding patterns, etc.) for the machine.

If the JAM box should fail, the memory card can be removed from the failed JAM box and installed in a new JAM box.

1. Removing the memory card:

   a. Important: Make sure the JAM box is powered down. Make sure all electrical power to the JAM box is turned off (circuit breaker open, wires disconnected, etc.).

   b. Remove four screws (1) and cover plate (2) from the JAM box.

   c. Carefully remove the memory card (3) from the lower compact flash card slot. Important: The upper card slot (A) is for a PCMCIA memory card and is not used.

2. Installing the memory card:

   a. Install the memory card with vendor label down or towards the rear of the JAM box.

   b. Align the memory card in the lower card slot and carefully push it in until it is firmly seated.

   c. Replace cover plate (2) on the JAM box and secure with four screws (1).

3. Starting the program on the memory card:

   a. Turn on the electrical power to the JAM box (close circuit breakers, connect wires, etc.).

   b. Press the Power Button on the JAM box to power up the JAM box.

   c. As the system is booting up, the program on the memory card will be started.

      If the existing memory card was installed, the existing program version will be started and all of the data files that were previously stored will be used.

      If a different memory card was installed with a newer program version, the newer program version will be started and all of the data files will reset to the default settings.

      If a memory card is supplied with only the base files and no application software, the JAM will boot up to the Jupiter splash screen and display a circle with a slash through it to indicate that there is no software installed. The machine control software can be reloaded using an install.jam file from a memory stick and all of the data files will be reset to the default settings.

3.1 Jupiter Control System

3.1.4 JAM (Jupiter Application Master)

d. If a newer program version was installed, record the program version and date of installation in a safe place for future reference.

FIGURE 5
JAM - FRONT

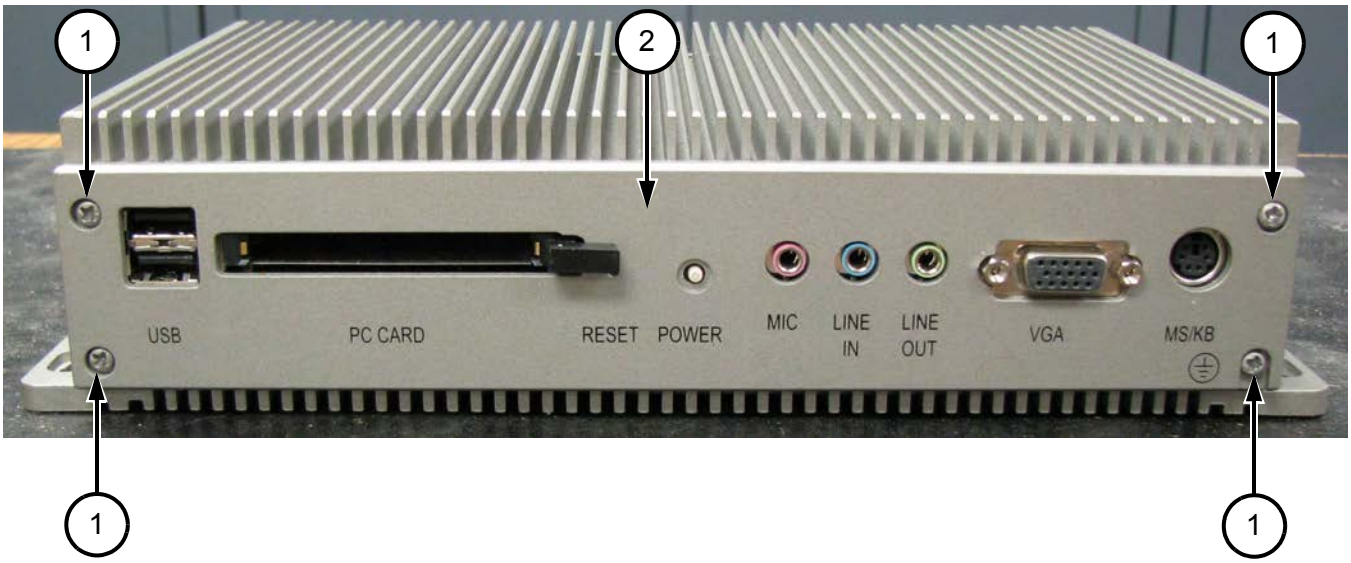

FIGURE 6
JAM - MEMORY CARD

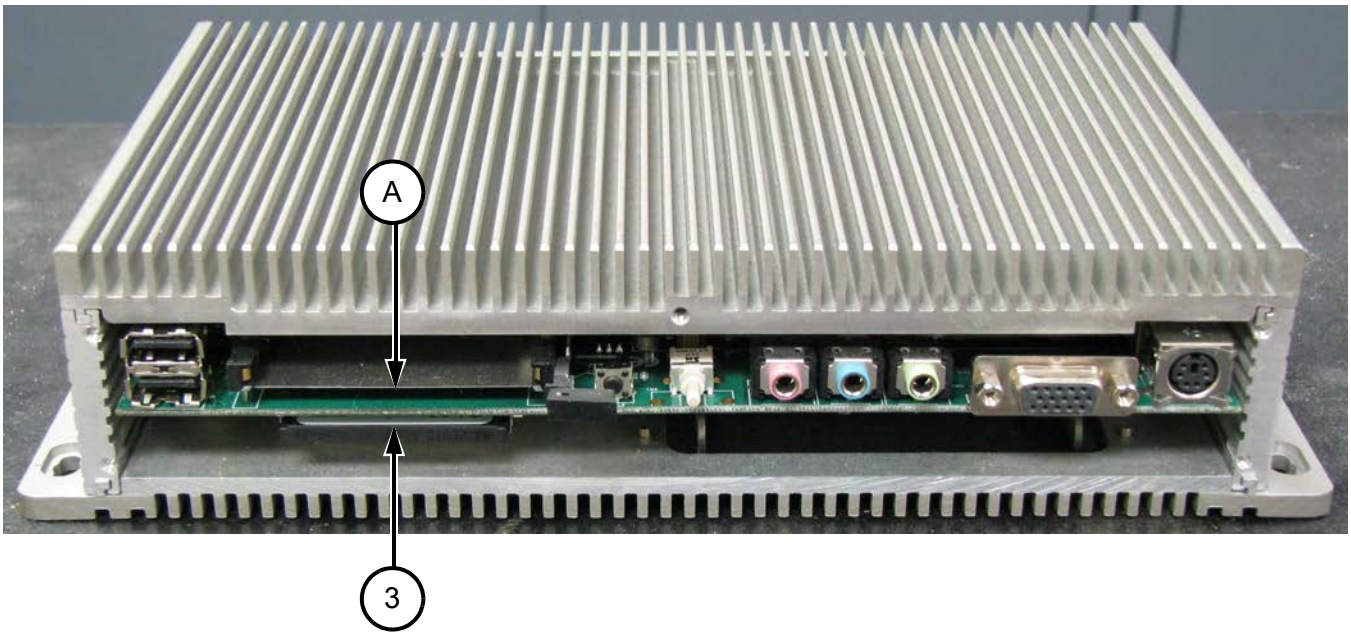

3.1 Jupiter Control System

3.1.4 JAM (Jupiter Application Master)

3.1.4.2 Battery Replacement - See Figure 7

The JAM uses a Clock Battery and an SRAM Battery. Both batteries must be replaced when the BTRY LED illuminates on the JAM box.

Battery Specifications - BH1 Clock and BH2 SRAM:

Lithium Battery: BR2032 (Using a CR2032 battery is not recommended)
Output Voltage: 3 VDC

3.1.4.2.1 Replacing the batteries:

1. Important: It is recommended that batteries be replaced in a static free environment. Use of an Electro Static Discharge (ESD) pad and strap is recommended to help prevent damage to static sensitive devices on the circuit boards inside the JAM box.

2. Important: Make sure the JAM box is powered down. Make sure all electrical power to the JAM box is turned off (circuit breaker open, wires disconnected, etc.).

3. Carefully disassemble the JAM box to gain access to the back-side of the circuit board where the BH1 Clock Battery (1) and BH2 SRAM Battery (2) are located.

4. Carefully remove the existing BH1 Clock Battery (1) and BH2 SRAM Battery (2) from the battery holders on the board. Use care not to damage the battery holders or circuit board.

5. Be sure the new batteries meet the specifications shown above before installing the batteries.

6. Install the new BH1 Clock Battery (1) and BH2 SRAM Battery (2) in the battery holders on the circuit board. Use care not to damage the battery holders or circuit board.

7. Carefully re-assemble the JAM box.

8. Turn on the electrical power to the JAM box (close circuit breakers, connect wires, etc.).

9. Press the Power Button on the JAM box to power up the JAM box.

10. Make sure the BTRY LED is not illuminated on the JAM box.

3.1 Jupiter Control System

3.1.4 JAM (Jupiter Application Master)

FIGURE 7
JAM BATTERIES

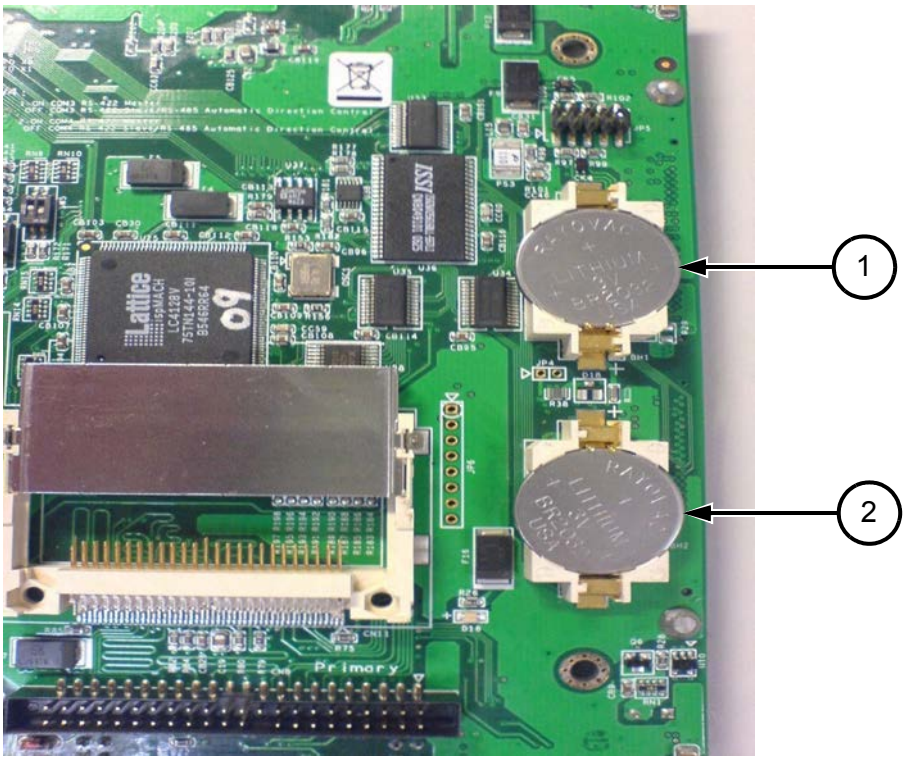

3.1 Jupiter Control System

3.1.5 J42 Board - See Figure 8

The J42 Board is located near t he JAM box. The J42 Board pr ovides the physical connection between the JAM and the Jupiter Network Modules on the machine. The J42 Board improves reliability and diagnostics through the following:

1. The connection to the 24 volt power on pin 2 of the Jupiter Network Cables (up to the first power distribution tee) is through the J42 Board.

2. The J42 Board provides the network connections between the JAM and the first Jupiter Module in the network (module #2).

3. The terminating resistor for the beginning of the network is located on the J42 Board.

4. The J42 Board has a signal oscillator that drives the “Daisy-Chain” signal on the Jupiter Network Cable which allows the first module in the network to establish its address. All "Daisy-Chain" inputs, outputs and connections between modules must be fully functional for each module to successfully establish its location in the network. Network module addressing is secure and network diagnostics are more comprehensive.

Connectors and LED’s on the J42 Board:

(1) J1: 24V Power In connector used for J42 Board.
(2) J2: 24V Power Out connector used for JAM.
(3) J3: Serial port connector used for JAM.
(4) J5: Jupiter connector used for first module (#2) in Jupiter network.
(5) LED 1 - Red: LED is off in normal state. See 3.1.5.1 J42 Board Status LEDs.
(6) LED 2 - Red: LED is off in normal state. See 3.1.5.1 J42 Board Status LEDs.
(7) LED 3 - Yellow: LED is off in normal state. See 3.1.5.1 J42 Board Status LEDs.
(8) LED 4 - Green: LED will flash in normal state. See 3.1.5.1 J42 Board Status LEDs.

3.1 Jupiter Control System

3.1.5 J42 Board

FIGURE 8
J42 BOARD

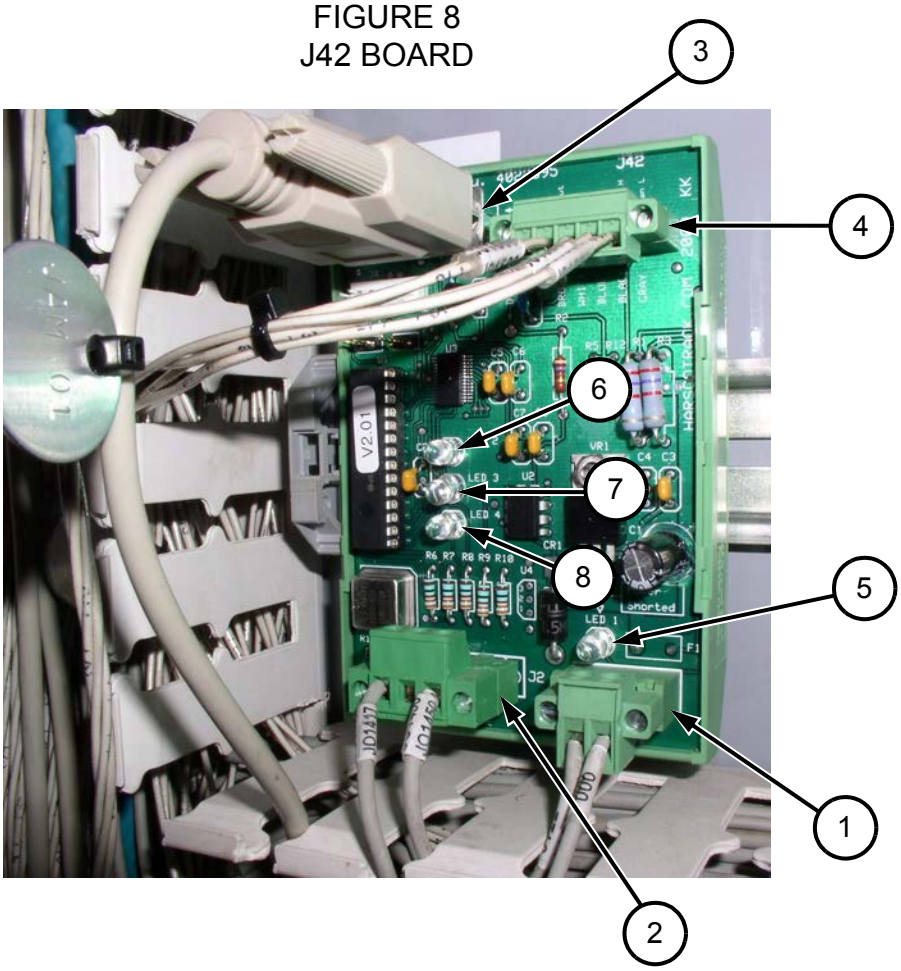

3.1 Jupiter Control System

3.1.5 J42 Board

3.1.5.1 J42 Board Status LEDs - See Figure 9

The LEDs on the J42 Board will illuminate and/or flash to help determine if CAN communication is good, or if there is a problem.

FIGURE 9
J42 BOARD STATUS LEDs

LED 1 Red	LED 2 Red	LED 3 Yellow	LED 4 Green	Flash Style	Status Description
Off	—	—	—	Red Off	Fuse F1 is OK (normal state).
On	—	—	—	Red On	Fuse F1 is open (short). After fuse cools and resets, LED will go out.
—	Flash	Off	Off	Red Flash	Bus warning (ack errors). Communication problem between JAM and Jupiter CAN bus network.
—	On	Off	Off	Red On	Buss off error. No communication between J42 Board and Jupiter CAN network.
—	Off	Flash	Off	Yellow Flash	Communication problem between JAM and J42 Board.
—	Off	On	Off	Yellow On	No communication between JAM and J42 Board.
—	Off	Off	Flash	Green Flash	Heart-beat (normal state). Slow rate when JAM is not transmitting or receiving data. Fast rate when JAM is transmitting or receiving data.
—	Off	On	Flash	Yellow On Green Flash	UART receiver framing or overrun error detected.
—	Off	Flash	Flash	Yellow and Green Flash Together	Checksum error while receiving JAM message.
—	Off	Flash	Flash	Yellow and Green Flash Alternately	Heart-beat time out error.
—	Off	Flash	On	Yellow Flash Green On	Can receive software buffer overflows detected.

3.1 Jupiter Control System

3.1.5 J42 Board

3.1.5.2 Troubleshooting

1. Confirm the following:

   a. LED 1 is not illuminated.

   b. LED 4 is flashing green.

   c. The green "Run" LED on the faceplate of module #2 is flashing and the yellow "Download" LED indicator is not lit or indicating a daisy-chain error.

   d. The JAM is running and communicating with module #2.

   e. If the above 4 items are confirmed, the J42 Board is working.

2. If the JAM fails to start:

   a. Use a meter to check for the presence of 24 volts at J1 connector on the J42 Board. This is the input supply for the J42 Board. Without 24 volts at J1 connector, the system cannot function.

   b. Use a meter to check connector voltages at the JAM end of the cable between the J42 Board and the JAM. If the 5 volts is less than 4.85 volts or more than 5.15 volts, or the 12 volts is missing, check the connections. The cable and/or the J42 Board may need to be replaced.

3. If none of the status LED indicators ("Error", "Run" and "Download") on module #2 are illuminated or flashing:

   a. Use a meter to check for the presence of 24 volts at J1 connector on the J42 Board. This is the input supply for the J42 Board. Without 24 volts at J1 connector, the system cannot function.

   b. Disconnect the J3 connector (purple cable) from the J42 Board. Use a meter to test for the presence of 24 volts between pins 2 and 3. If 24 volts is present, the cable to module #2 and/or module #2, will need to be replaced.

4. After a module download, if the green Run LED and yellow Download LED on any or all of the modules are rapidly flashing in an alternating sequence, then the download may have been interrupted due to field power loss or faulty network connections. The alternating LED sequence observed on modules is illustrated in the timing diagram below. Any module displaying this LED sequence can no longer read inputs or write outputs until the module software is successfully loaded. Check cabling, connectors and the J42 connections and then reboot the JAM. After rebooting, the JAM will detect this fault condition from the modules and attempt to re-download to all modules. The JAM can be rebooted until this condition no longer persists on any module on the network.

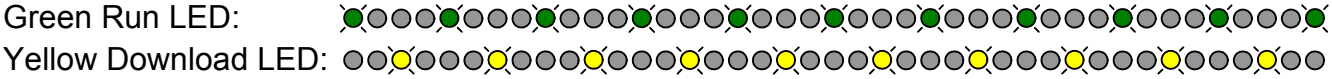

3.1 Jupiter Control System

3.1.5 J42 Board

3.1.5.2 Troubleshooting

5. Although a Jupiter Network is made up of many separate cables, the wires that carry the network messages (pins 1, 4 and 5) are all continuously connected from the beginning of the network (JAM) to the end of the network (the module with the terminator and highest address number). A fault at one location on the network will typically affect all modules on the network. There are network communication errors when:

   a. The "Error" LED on one or more modules turns red from time to time.

   b. The green heartbeat status on the JAM module diagnostic screens turns red or gray erratically.

   c. The alarm message "Dead module detected" occurs (typically for more than one module).

6. For any combinations of the above, use the following procedure:

   a. The engine should be off.

   b. Disconnect J1 connector. The resistance across resistor R5 should be approximately 60 ohms. If this resistance is closer to 120 ohms, the terminator (or terminating resistor inside the terminator) on the CAN OUT connector of the last module on the network may be missing or not connecting properly. Reconnect J1 connector.

   c. Check the network (purple) cable for loose connections or damage. If no problems are found, do the following:

      1. Disconnect the network cable about halfway through the network from the "CAN 1 out" connector of the module chosen to be the temporary "last module". Move the terminating plug from the "CAN 1 out" connector of the last module to the "CAN 1 out" connector of the temporary "last module".
      2. If the modules that remain connected continue to show similar symptoms, divide the network approximately in half again.
      3. If the symptoms are not present, reconnect and disconnect about halfway through that part of the network most recently disconnected.
      4. Always move the terminating plug to the "CAN 1 out" connector of the temporary "last module".
      5. Continue in this way until the problem is narrowed down to a single module.

7. Where a problem is being caused by a bad connection, the action of disconnecting and connecting the network may fix the problem and give inconsistent and confusing results when using this method. Each time a disconnection is made, take advantage of the opportunity to check for internal corrosion and proper engagement.

8, After narrowing down the symptoms to a single module, the problem must lie with the "CAN 1 in" connection on the module, the cable to the upstream (lower CAN numbered) module, the "CAN 1 out" connection on the upstream module or the module itself.

3.1 Jupiter Control System

3.1.6 The Jupiter "Daisy-Chain" System

In order to troubleshoot the Jupiter System, it is important to understand how the "Daisy-Chain" system is used to address each module in the network.

1. The typical Harsco Rail Jupiter control system installation consists of "Intelligent" Input / Output (I/O) modules in a distributed network, and a primary controller known as the Jupiter Application Master (JAM) box. The JAM box is a PC-based user-interface for video, touch-screen, keyboards, printers, etc. Under normal operation, it is also the master controller, handling the code execution for machine control and the communication back and forth with each module in the network. One of the benefits of “intelligent” modules is their ability to execute control code and communicate directly with other modules on the network, that is, to function as a “JAM”. When a module in the network takes over this “master” role this is known as Fallback Mode operation.

2. Should the Jupiter modules in a network fail to observe the JAM box as communicating with them, the lowest numbered module (typically module 2) will automatically take over as the fallback JAM. A subset of control code is often developed for fallback that then provides for basic control requirements to be performed, such as allowing the operator to pick up any deployed components and travel the machine away from the work site. On some machines the fallback operation is functional during the delay while the JAM box completes its boot process, while on others, a time out in the software prevents fallback operation until sufficient time has passed for the JAM box to finish booting. Therefore if the JAM box boot-up doesn’t succeed or the JAM box were to fail while in operation, the machine automatically enters fallback at that time.

3. The standard blink rate of the LEDs is blink On and Off twice a second.

4. It is important when trouble shooting to know if the network is in Normal or Fallback Mode operation. This can be confusing to determine as a bad video signal or a bad JAM box can be confused from the operator's seat. The indication of a good Network without an operating/booted JAM box is the blink rate of the Green Run LED on Module 02 (the start of the network). The standard blink rate of On and Off twice a second will double and blink at a rate of On and Off four times a second on this module and this module only when in Fallback Mode. If any other modules in the Network blink at this rate it suggests a network or hardware problem. Specifically, as an example, if module 8 is blinking at the double rate of On and Off four times a second, would mean that module 8 does not recognize the JAM box or any other module with a lower address, modules 2 through 7, on the network and therefore has determined that it is the JAM.

NORMAL BLINK RATE

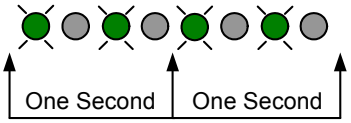

FALLBACK MODE BLINK RATE

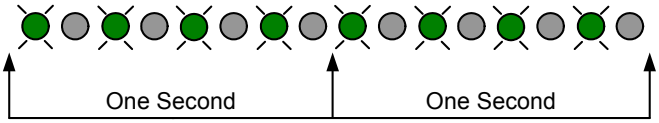

3.1 Jupiter Control System

3.1.6 The Jupiter "Daisy-Chain" System

5. On each module, there are 5 pins in the M12 "CAN 1 in" and "CAN 1 out" connectors for the purple Jupiter network cables. Each pin on the input connector of a module is connected to the same numbered pin on the output connector with the single exception of pin 1 which is the "Daisy-Chain" signal. Pin 1 on the "CAN 1 in" connector is an input to the internal processor and pin 1 on the "CAN 1 out" connector is an output that can be driven by the internal processor. This allows the internal processor of a module to send data to the next module (higher address) in the network.

6. At startup, each module receives its network address from the previous module which it will internally store. It will then add 1 to this address and send it to the next module in the network and so on. In the case of the first module in the network (module 2), there is no module to provide it with its address. The J42 Board performs this function as well as providing proper terminations for all connections at the beginning of the module network.

7. If a module fails to establish its address at startup, it will resort to the address stored (from when the "Daisy-Chain" did succeed on a previous occasion) in the internal memory of the module. A "Daisy-Chain" failure is therefore not critical and the machine can be safely operated, for days if necessary, provided modules are not swapped around in the network (or replaced with a spare or new module). While continued operation is safe in the event of such a failure, correcting the problem should be a priority.

8. When a module on startup fails to receive its address on the "Daisy-Chain" input pin, it will abort any attempt to notify the next module of its address using the "Daisy-Chain" output pin.

5. Here are some important "Daisy-Chain" facts:

   a. While a module is waiting for the "upstream" module to send it the next address, the yellow Download LED remains solid and the green Run LED flashes rapidly. When the address has been received successfully, the yellow Download LED is turned off. If the "daisy-chain" signal is not present while the module is waiting for an address, the yellow Download LED remains solid ON and the green Run LED will be off.

   b. If the "daisy-chain" output signal from the upstream module on the network is not present while the module is waiting for an address, the yellow Download LED remains solid ON and the green Run LED will be off. When the "daisy-chain" process times out, the yellow Download LED will blink ON and OFF instep with the green Run LED to indicate there was a problem with the module's daisy-chain input signal. The module will use its internally stored address and instruct all the downstream modules to use their internally stored addresses as well. The LED sequence displayed a module having a daisy-chain input failure is illustrated in Figure 10, Timing Diagram. Note that only one of the three yellow LED sequences will be displayed depending upon the type of daisy-chain failure. Also note in the diagrams that the yellow LED goes off when the green LED goes off in each case.

3.1 Jupiter Control System

3.1.6 The Jupiter "Daisy-Chain" System

c. If a module successfully receives its address on the "Daisy-Chain" input pin at startup and the received address does not match the internally stored address, the alarm "Address change (new or moved module)" will be reported. Because the new address will replace the internally stored address, this alarm will not be generated on the next startup. This alarm can be expected when modules are swapped around on a network and/or a module is replaced. This alarm does not indicate an error unless no module was moved or added.

d. After a module has established what address it will use, it will then check the type of module (Analog Input, Digital Input / Output, High Density Digital Input / Output, Digital to Analog Output) it is and that it matches the machine. If the module type is wrong for the address, the alarm "Incorrect module type" will be reported.

FIGURE 10
TIMING DIAGRAM

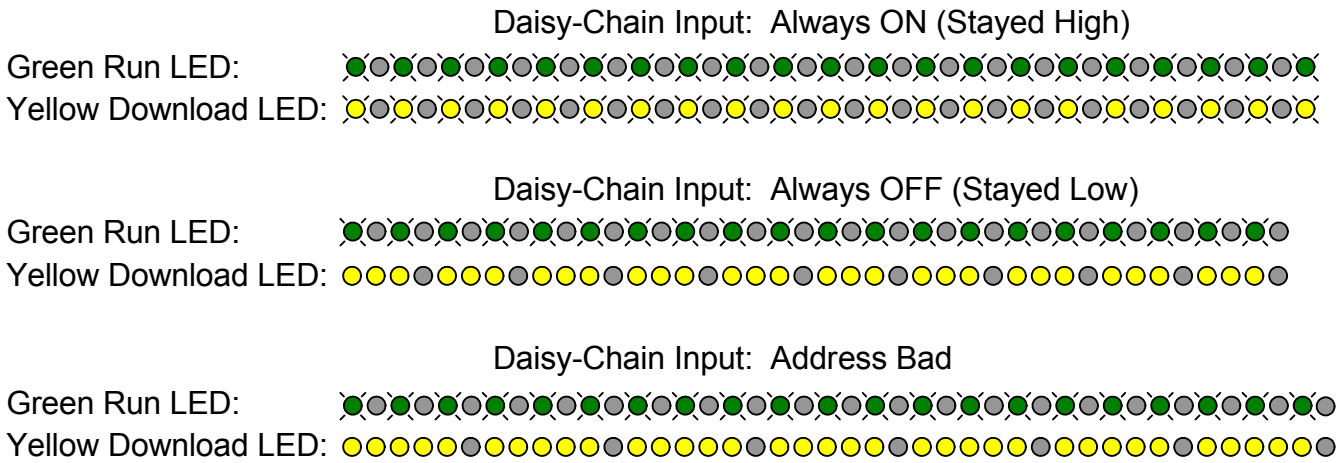

3.1 Jupiter Control System

3.1.7 Network Cable Identification - See Figure 11

The Jupiter network modules and components on the machine are connected by special pre-molded cables that consist of the following:

(1) Jupiter Network Cables: The cables are colored purple, have a M12 female connector on one end and a M12 male connector on the other end. The cables are available in different lengths and have an identification tag on both ends.

(2) Field Power Cables: The cables are colored black, have a M12 female connector on one end and a pigtail (loose wires) on the other end. The cables are available in different lengths and have an identification tag on one end.

(3) Input / Output Cables: The cables are colored black, have a M12 male connector on one end. The other end may have a M12 female connector (A), a pigtail (loose wires) (B), or a DIN connector (C). The cables are available in different lengths and have an identification tag on one or both ends.

(4) DIN Connectors: The connectors are color coded that can be used to determine if the connector has no suppression, a diode, or a transzorb. The connector also has a power status LED that can be used to determine if power is available to the component when required.

(5) Identification Tags: Each cable has an identification tag on one or both ends of the cable that lists the cable part number and cable date of manufacture.

3.1 Jupiter Control System

3.1.7 Network Cable Identification

FIGURE 11
NETWORK CABLE IDENTIFICATION

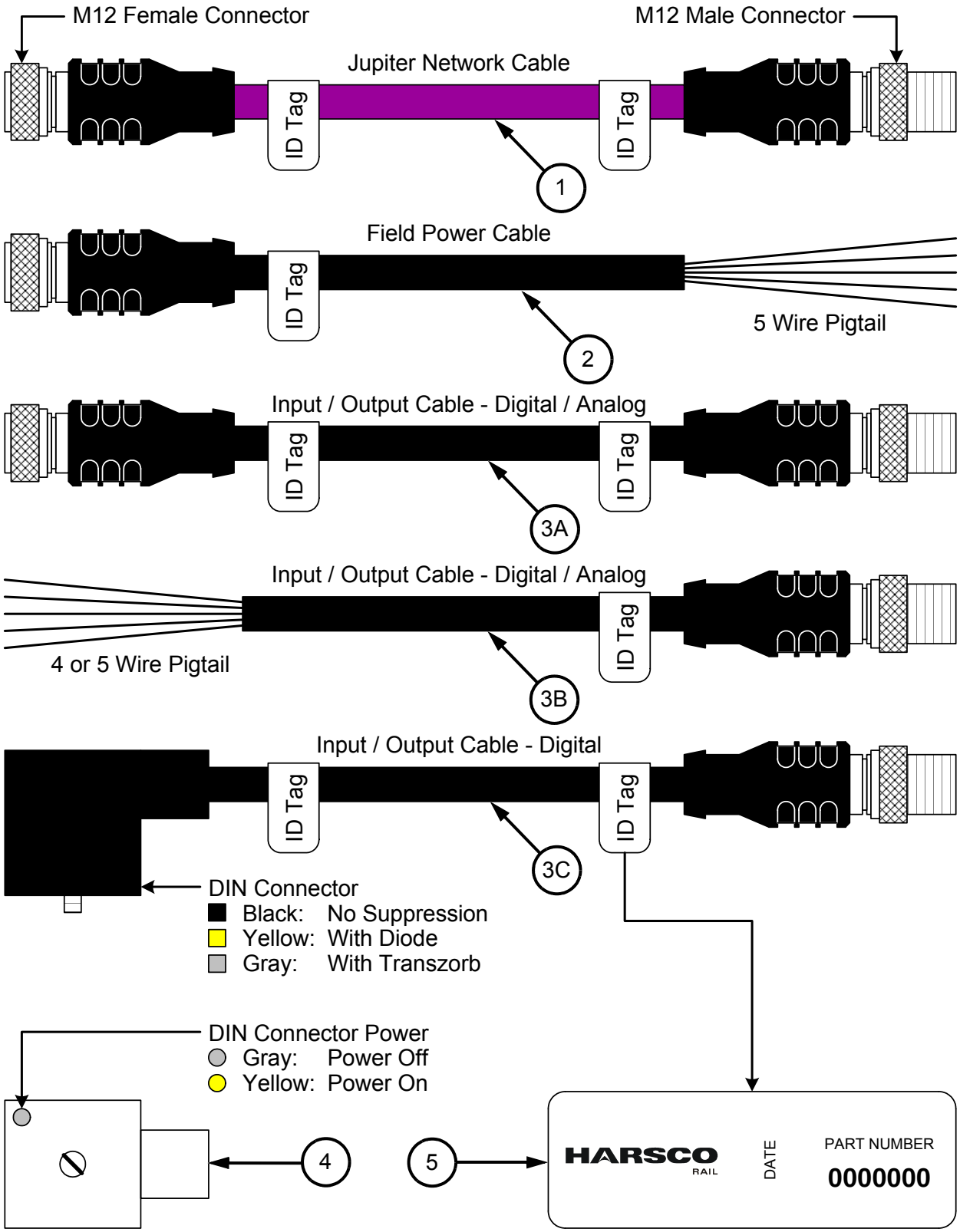

3.1 Jupiter Control System

3.1.8 Network Cable Connections - See Figure 11

1. M12 Connector: To prevent damage to the module or component connector, loosen or tighten the cable end by hand only. DO NOT use pliers.

   a. To disconnect the cable end, loosen the cable end by hand. Pull the cable end straight out of the module connector.

   b. To connect the cable end, align the pins in the cable end with the module connector and push in. A raised bump (or tick mark) is located next to each of the connectors on the modules that can be used for pin alignment when connecting the mating cable to that connector. Turn the cable end to start the threads on the module connector and tighten by hand until it can no longer be turned. Wiggle the cable end slightly, push in and tighten again by hand until it can no longer be turned. Repeat this procedure until the cable end is securely tightened on the module connector.

2. Pigtail (Loose Wires):

   a. To disconnect the cable end, remove the wire cover from the component, if so equipped. Note which cable wires (colors, numbers, etc.) are connected to the component terminals. Disconnect the cable wires from the component terminals.

   b. To connect the cable end, connect the wires to the component terminals using the same wiring as before and/or the Electrical Schematics as reference. Be sure to wrap any unconnected wire ends with electrical tape so they do not short out. Install the wire cover securely on the component, if so equipped.

3. DIN Connector:

   a. To disconnect the cable end, remove the mounting screws from the DIN connector. Remove the DIN connector on the cable end from the mating DIN connector on the component.

   b. To connect the cable end, align the DIN connector on the cable end with the mating DIN connector on the component and install. Tighten the mounting screws in the DIN connector securely.

3.1 Jupiter Control System

NOTES

3.1 Jupiter Control System

3.1.9 Network Module Status LEDs - See Figure 12

All Jupiter Network Modules ha ve three Module S tatus LEDs on the front p anel labeled as follows:

Note: If no LEDs are displayed on a module when 24 volt power is applied, the module should be replaced.

- Error (Red)
- Run (Green)
- Download (Yellow)

1. During normal operation, the red Error and yellow Download LEDs will remain OFF and the green Run LED will flash at the normal rate of approximately 2 times a second.

   a. If the JAM should fail, the first module in the network after the JAM, Module #2, will operate in the fall back mode as the network master and its green Run LED will flash at a faster rate of approximately 4 times a second. The green Run LED on the other modules in the network will flash at their normal rate of approximately 2 times a second.

   b. If a network module should fail with the JAM operating properly, only the failed module will operate in the fall back mode and its green Run LED will flash at a faster rate of approximately 4 times a second.

2. The red Error LED will illuminate if any communication errors occur on the Jupiter Network. If the LED remains on, the module is unable to communicate and any outputs will switch to a safe state. This can be confirmed on the Diagnostic Screens by the absence of a heartbeat indicator for the module. Check to ensure that the purple network cables between the module and any adjacent modules are properly connected and not damaged. If the error persists, it will be necessary to replace the module.

3. The yellow Download LED will illuminate briefly when the Jupiter Control System is booted up. The yellow LED will flash when there is a program run error or when a daisy-chain address error has been detected. When a module is being programmed by the JAM, the yellow LED will flash rapidly. Do not turn off the Jupiter Computer during a programming phase until normal operation resumes. This programming phase lasts for several seconds and is automatically started under the following circumstances:

   a. The Jupiter Control System is being booted up for the first time after one or more modules have been replaced and the internal module programming does not match what is necessary for the machine.
   b. A Harsco Rail Technician has changed the machine software. This will usually result in all modules being re-programmed.

   Note: If the yellow Download LED remains on continuously, the internal programming of the module is faulty. Replace the module.

3.1 Jupiter Control System

3.1.9 Network Module Status LEDs - See Figure 12

4. For a properly functioning module, the Status LEDs will always flash. Failure to do so indicates a problem. In addition to the above mentioned LED descriptions, there are some additional interpretations of LED combinations:

FIGURE 12
NETWORK MODULE STATUS LEDs

Error Red	Run Green	Download Yellow	Flash Style	Status Description
Off	Off	Off	All Off	Cable not connected, cable connection loose, or cable defective. Tighten cable connection, or replace cable.
Off	Flash	Off	Green Flash	Normal Operation, successful daisy-chain on this power up. All upstream modules (lower addresses) can also be expected to be normal.
Off	Flash	Flash	Green and Yellow Flashing, Both Off Together	Daisy-chain input error on this module. Only downstream modules that also have a daisy-chain input error will display this sequence.
Off	Flash	Flash	Green and Yellow LEDs rapidly flashing alternating	Program run error, probably due to interrupted download.
Off	Flash	On	Green Flash Yellow On	This pattern occurs while waiting for the "upstream" module to send the "daisy-chain" signal to the next address.

1. The flash frequency for the above is approximately 2 times per second. For anything else, the above does not apply.
2. During power up, the yellow light will be ON while the module is waiting for the daisy-chain address from the upstream module. The daisy-chain process may take 4-5 seconds depending upon the total number of modules on the machine. The green light will also rapidly flash during this period if the daisy-chain input signal is being received from the upstream module.
3. Intermittent flashing of the Red Error light indicates BUS communication errors which are likely to affect all modules equally. Disconnect the network at various points until the problem is isolated.
4. For daisy-chain errors on power up, the fault lies with the first module to show a daisy chain fault, the daisy-chain output from its immediate upstream module (most likely), or a faulty Jupiter cable between them.

3.1 Jupiter Control System

3.1.10 Analog Input Module - See Figure 13

The Analog Input Module is used with analog input devices that have a varying feed-back voltage such as: engine sensors, fuel gauges, position sensors, etc. A raised bump (or tick mark) is located next to each of the connectors on the module that can be used for pin alignment when connecting the mating cable to that connector.

(1) CAN 1 in: This connector provides the Jupiter Network Program and the 24 Volts DC In for the Jupiter Network Circuit Board. The other end of the cable connected to this connector plugs into the CAN 1 out connector of the previous module in the network or the J42 Board.

(2) CAN 1 out: This connector sends the Jupiter Network Program and the 24 Volts DC Out to the next module in the network. When this module is the last module in the network, a special network module terminator is installed on this connector.

(3) CAN 2: This connector provides an independent network connection for communicating with secondary devices such as an engine electronic control module (ECM) and other CAN based devices.

(4) Field Power: This connector provides 24 Volts DC In for the Field Power Circuit Board and the C1 - C8 Connectors.

(5) C1 - C8: Each connector is capable of handling an analog input device. Each connector provides +10 and +24 Volts DC Outputs to the device and receives varying feed-back voltage from +10 to -10 Volts DC Inputs from the device depending upon the device.

(6) Module Status LEDs: The module has a set of module status LEDs that can be used for troubleshooting. See 3.1.9 Network Module Status LEDs.

(7) Identification Tag: Each module has an identification tag that lists the module part number, serial number, date of manufacture, etc.

3.1 Jupiter Control System

3.1.10 Analog Input Module

FIGURE 13
ANALOG INPUT MODULE

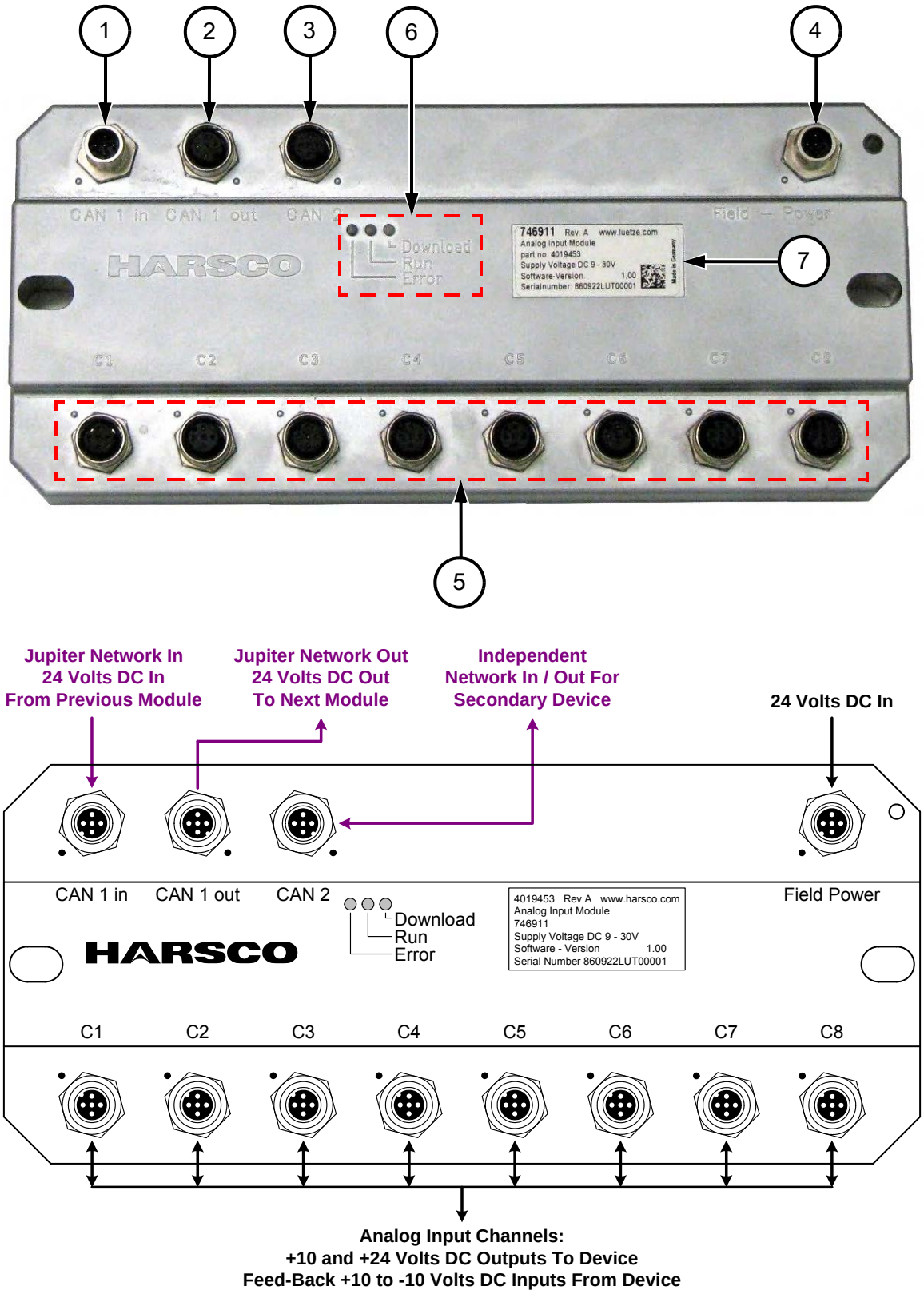

3.1 Jupiter Control System

3.1.11 Digital Input / Output Module - See Figures 14 and 15

The Digital Input / Output Module is used with digital input devices such as limit switches, pressure switches, etc., that when actuated, send the power back to the module. The Digital Input / Output Module is also used with digital output devices that have two positions (On / Off), such as valve coils, relays, lights, alarms, etc. A raised bump (or tick mark) is located next to each of the connectors on the module that can be used for pin alignment when connecting the mating cable to that connector.

(1) CAN 1 in: This connector provides the Jupiter Network Program and the 24 Volts DC In for the Jupiter Network Circuit Board. The other end of the cable connected to this connector plugs into the CAN 1 out connector of the previous module in the network or the J42 Board.

(2) CAN 1 out: This connector sends the Jupiter Network Program and the 24 Volts DC Out to the next module in the network. When this module is the last module in the network a special network module terminator is installed on this connector.

(3) Field Power: These connectors provide 24 Volts DC In for the Field Power Circuit Board and the C1 - C8 Connectors.

(4) C1 - C8 and Channel Status LEDs: Each connector is capable of handling a digital input or output device. Each connector has a set of channel status LEDs that can be used for troubleshooting. See Figure 14.

a. Input: Each connector is capable of receiving 24 Volts DC Inputs from the device.

b. Output: Each connector is capable of providing 24 Volts DC Outputs to the device. All outputs are Pulse Width Modulation (PWM) capable. PWM is a method of modifying digital output signals to simulate an analog voltage to control proportional valves and other proportional signal devices.

(5) Module Status LEDs: The module has a set of module status LEDs that can be used for troubleshooting. See 3.1.9 Network Module Status LEDs.

(6) Identification Tag: Each module has an identification tag that lists the module part number, serial number, date of manufacture, etc.

FIGURE 14
CHANNEL STATUS LEDs

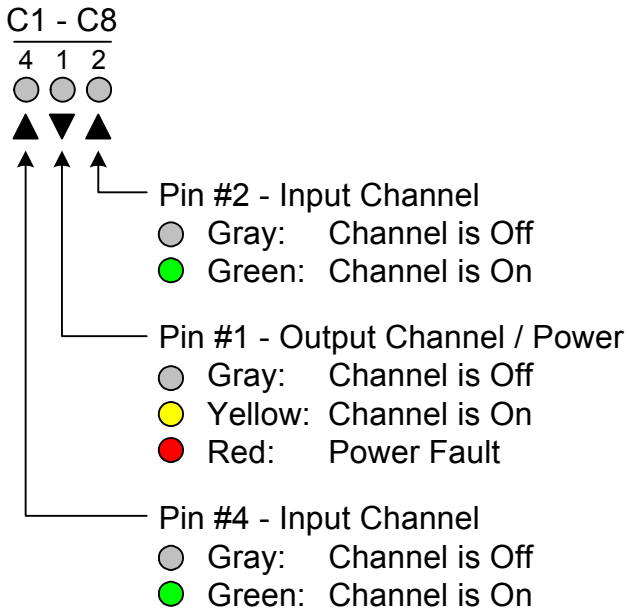

3.1 Jupiter Control System

3.1.11 Digital Input / Output Module

FIGURE 15
DIGITAL INPUT / OUTPUT MODULE

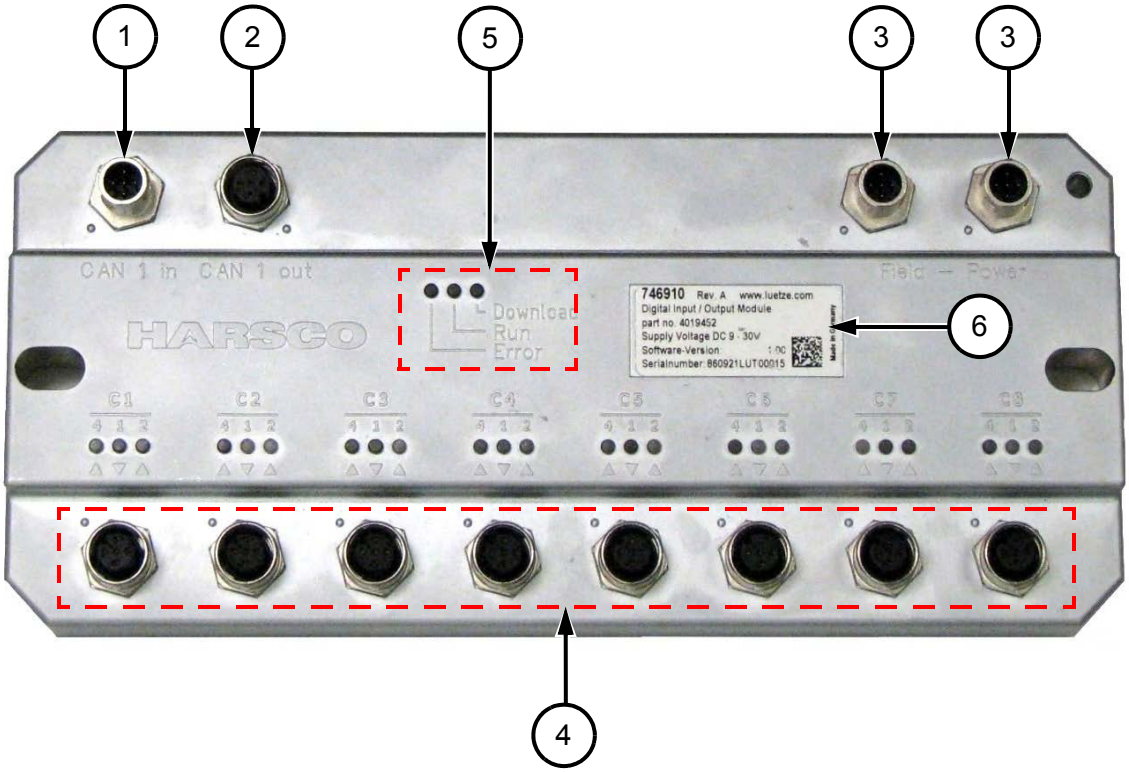

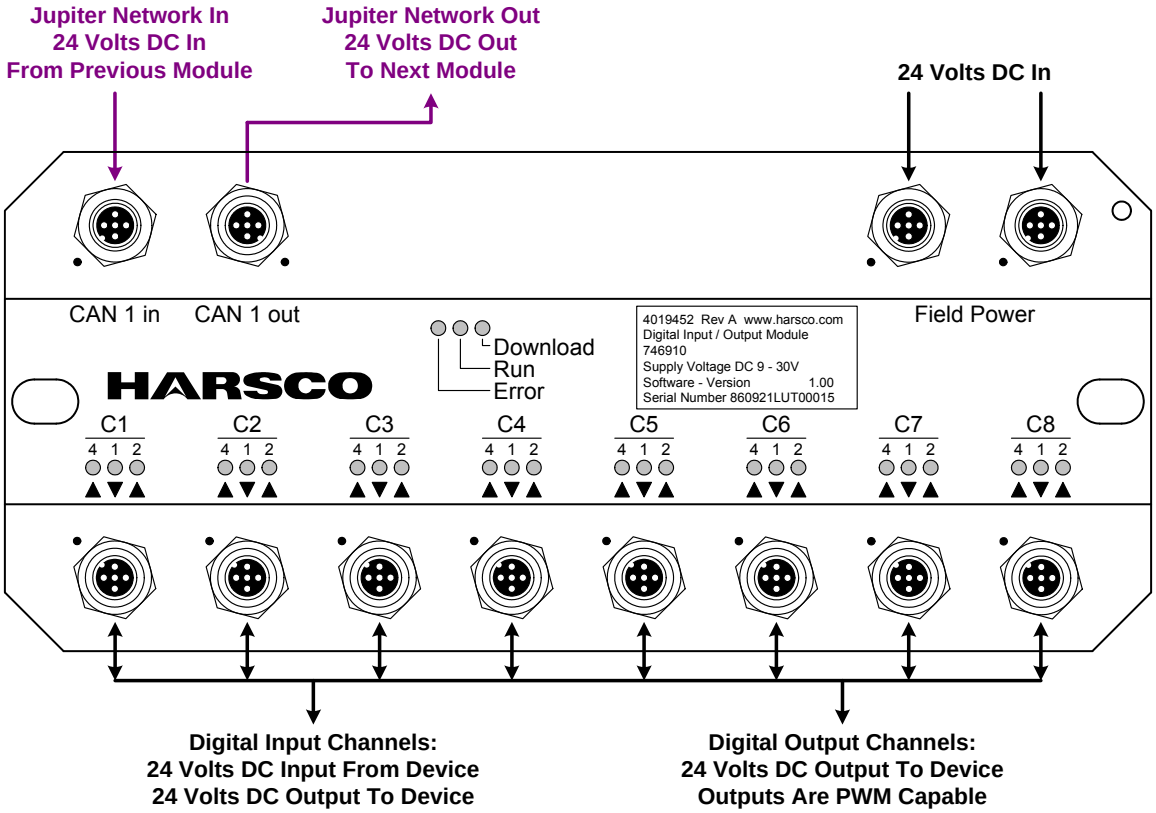

3.1 Jupiter Control System

3.1.12 HD Digital Input / Output Module - See Figures 16 and 17

The HD (High Density) Digital Input / Output Module is used with digital input devices that when actuated, send a power signal back to the module. Examples of these devices are: limit switches, pressure switches, etc. The HD Digital Input / Output Module is also used with digital output devices that have two positions (On / Off) such as: valve coils, relays, lights, alarms, etc.

(1) CAN 1 in: This connector provides the Jupiter Network Program In and the 24 Volts DC In for the Jupiter Network Circuit Board. The other end of the cable connected to this connector plugs into the CAN 1 out connector of the previous module in the network or the J42 Board.

(2) CAN 1 out: This connector sends the Jupiter Network Program Out and the 24 Volts DC Out to the next module in the network. When this module is the last module in the network, a special network module terminator is installed on this connector.

(3) CAN 2: This connector provides an independent network connection for communicating with secondary devices such as; engine electronic control units (ECU) and other CAN based devices.

(4) Field Power: These connectors provide 24 Volts DC In for the Field Power Circuit Board and the C1 - C4 Connectors.

(5) C1 - C4 and Channel Status LEDs: Each connector is capable of handling up to eight digital input or output devices. Each connector has a set of eight channel status LEDs that can be used for troubleshooting. See Figure 16.
   a. Input: Each connector is capable of receiving 24 Volts DC Inputs from the device.
   b. Output: Each connector is capable of providing 24 Volts DC Outputs to the device.

(6) Module Status LEDs: The module has a set of module status LEDs that can be used for troubleshooting. See 3.1.9 Network Module Status LEDs.

(7) Identification Tag: Each module has an identification tag that lists the module part number, serial number, date of manufacture, etc.

FIGURE 16
CHANNEL STATUS LEDs

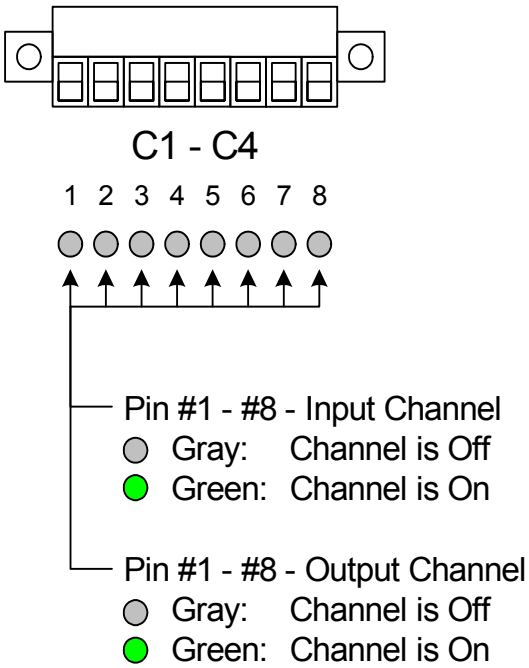

3.1 Jupiter Control System

3.1.12 HD Digital Input / Output Module

FIGURE 17
HD DIGITAL INPUT / OUTPUT MODULE

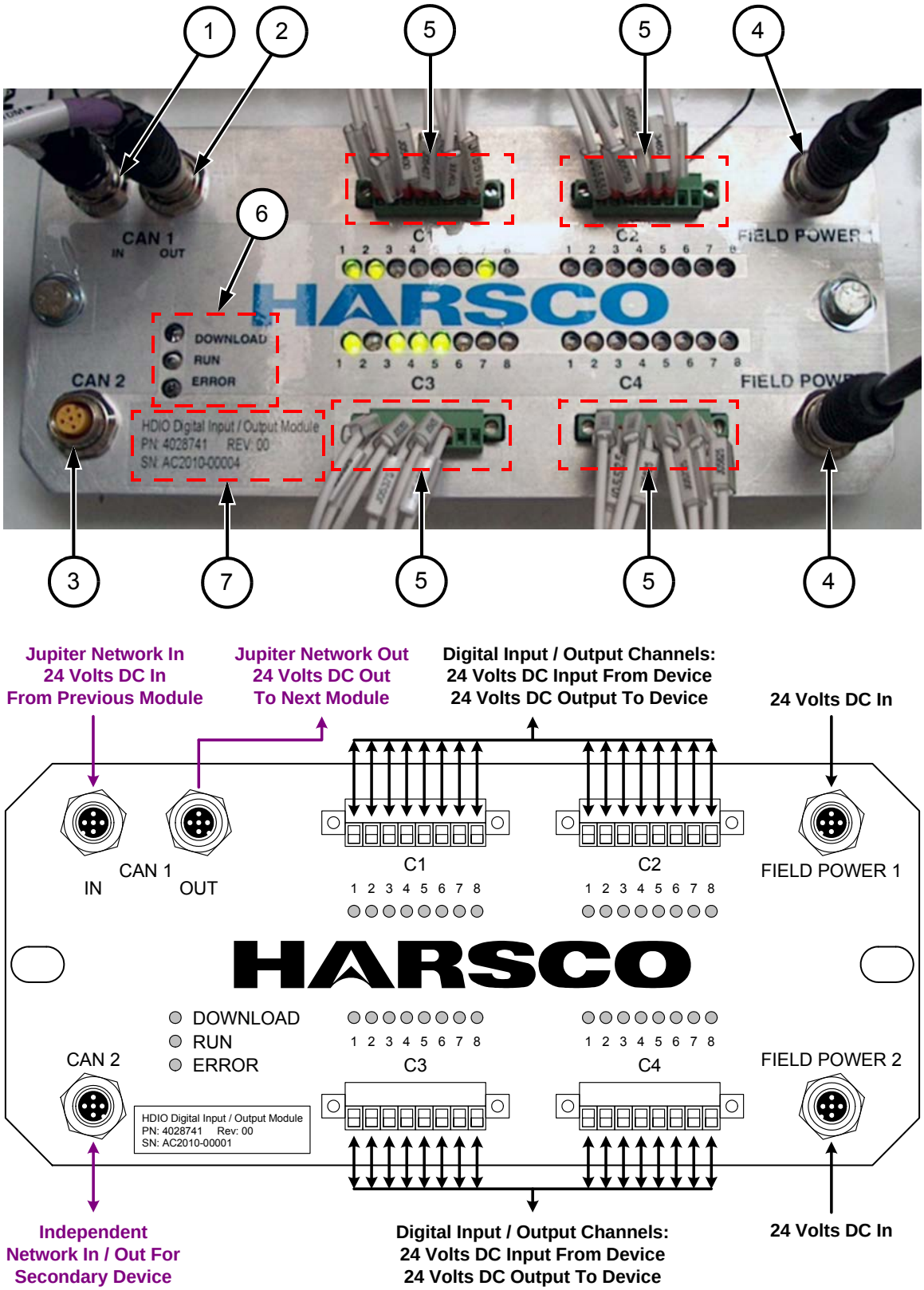

3.1 Jupiter Control System

3.1.13 Digital to Analog Output Module - See Figure 18

The Digital to Analog Output Module is used to drive servo valves and other devices that require a precision voltage or current input for control. These devices may be driven in "open loop" fashion, where the JAM specifies the exact output to drive, or in "closed loop" fashion, where the Digital to Analog Output Module itself is provided with feedback information used to evaluate the amount of error in its output signal relative to an output set point nominated by the JAM. Each plug on the Digital to Analog Output Module may be driven in open or closed loop fashion depending upon the application needs of the machine.

(1) CAN 1 in: This connector provides the Jupiter Network Program In and the 24 Volts DC In for the Jupiter Network Circuit Board. The other end of the cable connected to this connector plugs into the CAN 1 out connector of the previous module in the network or the J42 Board.

(2) CAN 1 out: This connector sends the Jupiter Network Program Out and the 24 Volts DC Out to the next module in the network. When this module is the last module in the network, a special network module terminator is installed on this connector.

(3) CAN 2: This connector provides a connection for an Analog Input Module. The Analog Input Module provides feedback information on this link that the Digital to Analog Output Module continuously uses to determine how to directly change its output signal.

(4) FIELD - POWER: This connector provides 24 Volts DC In for the Field Power Circuit Board and the C1 - C4 Connectors.

(5) C1 - C4 Connectors: Each connector is capable of providing + / - 10 Volts DC Outputs to the device.

(6) Module Status LEDs: The module has a set of module status LEDs that can be used for troubleshooting. See 3.1.9 Network Module Status LEDs.

(7) Identification Tag: Each module has an identification tag that lists the module part number, serial number, date of manufacture, etc.

3.1 Jupiter Control System

3.1.13 Digital to Analog Module

FIGURE 18
DIGITAL TO ANALOG OUTPUT MODULE

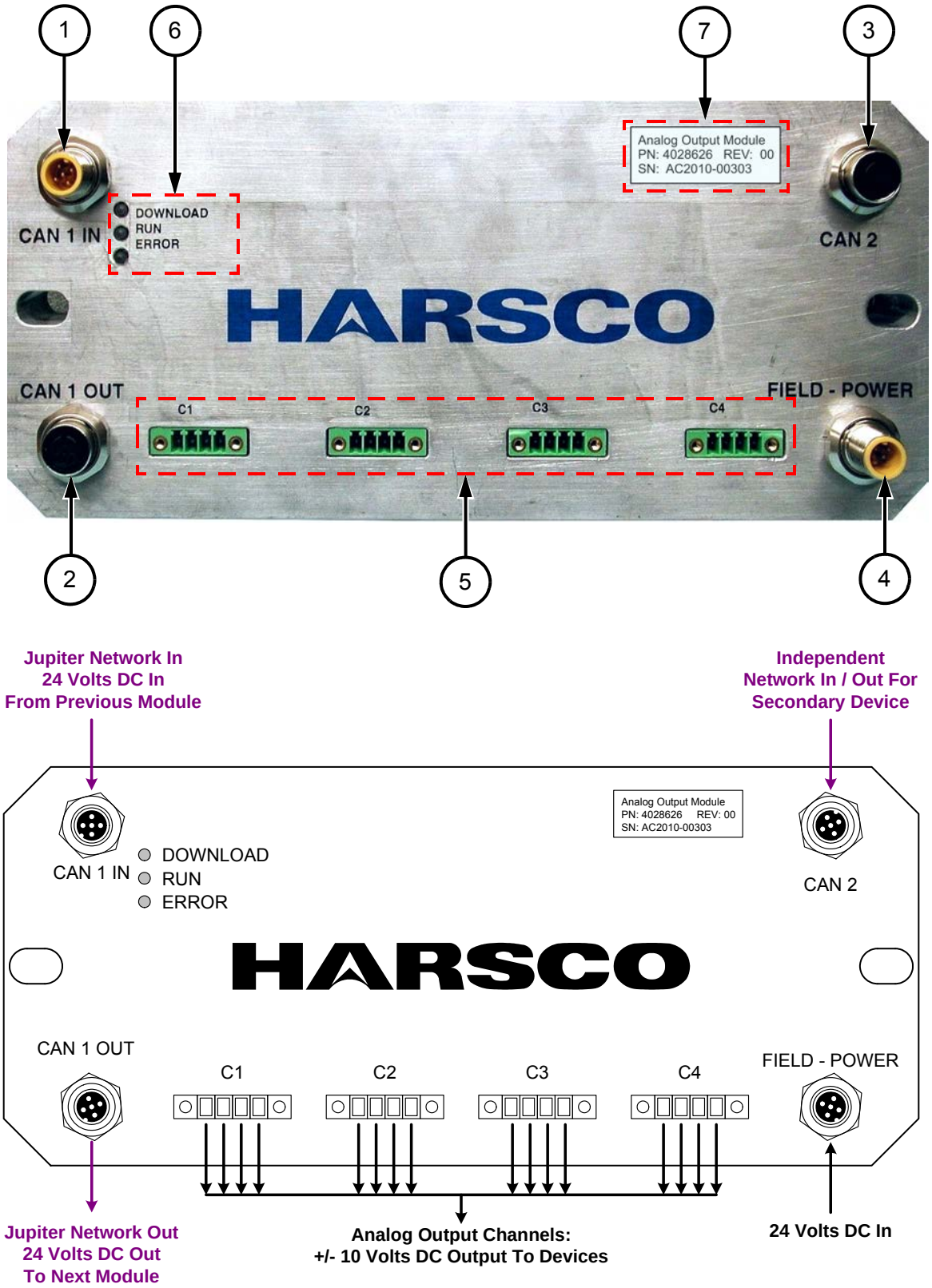

3.1 Jupiter Control System

3.1.14 Power Distribution Tee - See Figures 19 and 20

The Power Distribution Tees are used to help prevent voltage drops in the Jupiter Network. The Power Distribution Tee connections are as follows:

(1) X1 CAN in: The cable from the CAN 1 out connector on the previous module in the network is connected to the X1 CAN in (1). The existing 24 Volt DC In power supply is terminated inside the tee while the Jupiter Network In program is passed through to the X2 CAN / Power out connector (2).

(2) X2 CAN / Power out: The cable from the X2 CAN / Power out (2) is connected to the CAN 1 in connector on the next module in the network. This cable continues the Jupiter Network Out program with a renewed 24 Volt DC power supply.

(3) X3 Field Power in: The cable connected to X3 Field Power (3) provides a renewed 24 Volt DC for the X2 CAN / Power out connector.

3.1 Jupiter Control System

3.1.14 Power Distribution Tee

FIGURE 19
POWER DISTRIBUTION TEE

FIGURE 20
POWER DISTRIBUTION TEE DETAIL

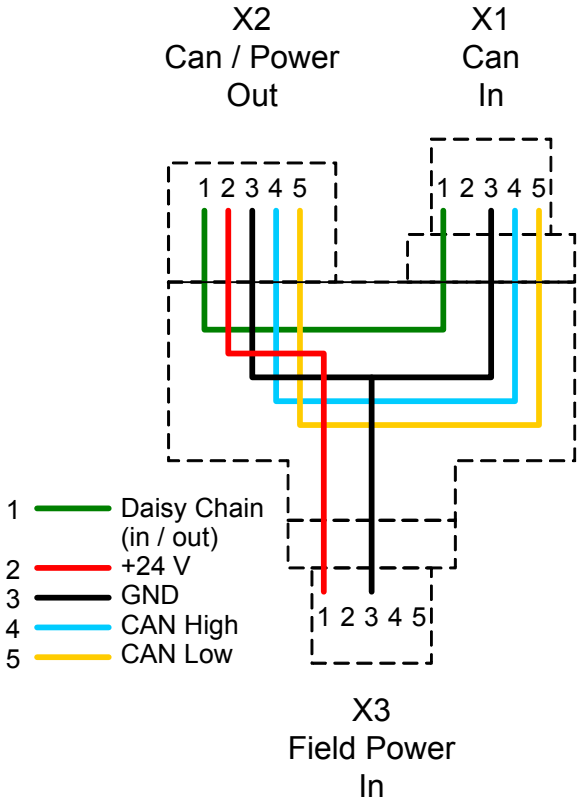

3.1 Jupiter Control System

3.1.15 Network Terminator - See Figures 21 and 22

The Network Terminator (1) must be installed on the CAN 1 out connector on the last module in the Jupiter Network. If the terminator is not present, Network communication will be compromised or may fail altogether.

FIGURE 21
NETWORK TERMINATOR

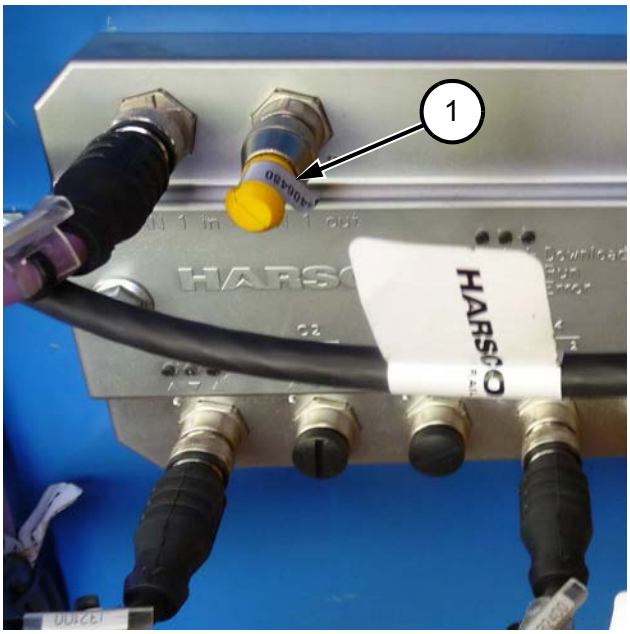

3.1 Jupiter Control System

3.1.15 Network Terminator

FIGURE 22
NETWORK TERMINATOR

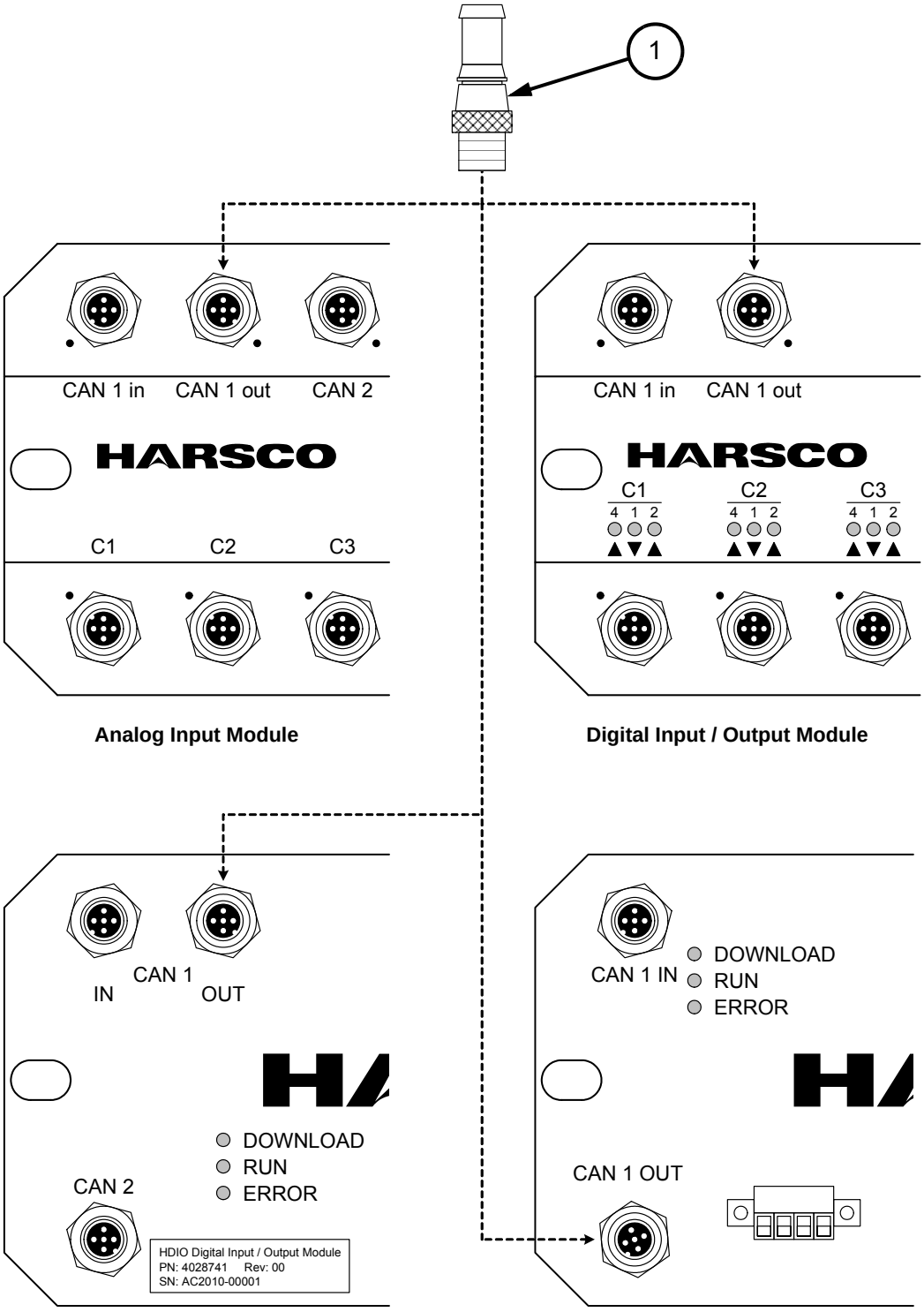

3.1 Jupiter Control System

3.1.16 Pass Through Splitter - See Figures 23 and 24

The Pass Through Splitter is only used with digital input channels. A single cable from a digital input channel of a network module is connected to (A). The cables from two separate devices such as proximity switches, pressure switches, etc. are connected to (1 and 2).

The two input channels #2 and #4 in the single cable (A) are routed to the separate cables (1 & 2) as follows:

Cable (A) input channel #2 is routed to both cable (1) and cable (2) input channel #2.
Cable (A) input channel #4 is routed to both cable (1) and cable (2) input channel #4.

(A) Cable "A" connection from any digital input channel of a network module.
(1) Cable #1 connection to 1st input device.
(2) Cable #2 connection to 2nd input device.

3.1 Jupiter Control System

3.1.16 Pass Through Splitter

FIGURE 23
PASS THROUGH SPLITTER

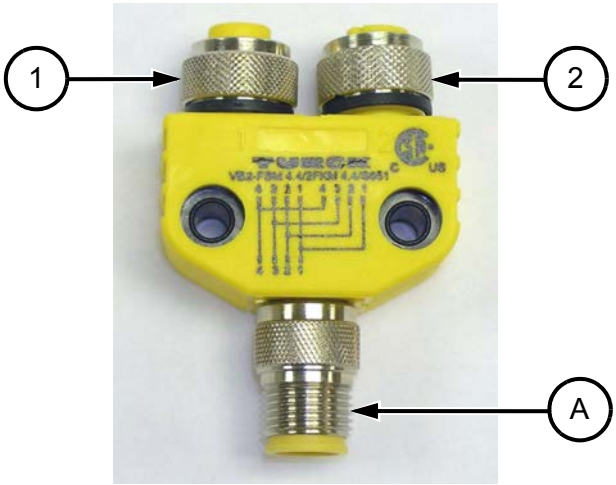

FIGURE 24
SPLITTER SCHEMATIC

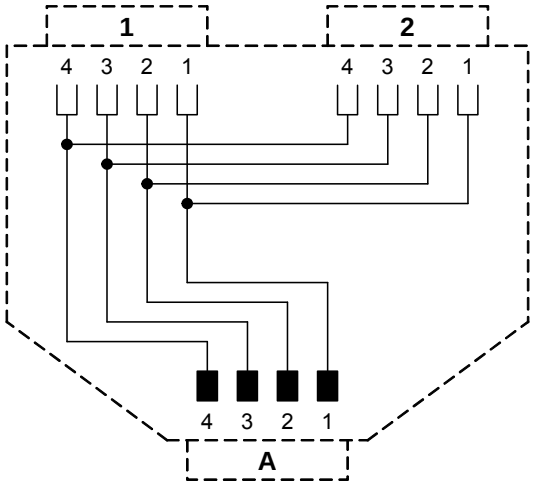

3.1 Jupiter Control System

3.1.17 **Cross Over Splitter** - See Figures 25 and 26

Harsco Rail currently uses three different types of Cross Over Splitters. The splitter shown in Figure 5-25 is Harsco Rail part number 414260. The splitter shown in Figure 5-26 is Harsco Rail part number 3416296. The third splitter, not shown, is Harsco Rail part number 2011783. Cross Over Splitters #3416296 and #2011783 have cables molded to the splitter. The molded cable (A) is 1 meter (39 inches) long. Molded cables (1 and 2) are 0.3 meter (12 inches) long. Splitter #3416296 has LEDs while Splitter #2011783 does not have the LEDs. The Harsco Rail Cross Over Splitters #3416296 and #2011783 are used to help reduce the number of wire connections. All three splitters function the same.

FIGURE 25
CROSS OVER SPLITTER #414260

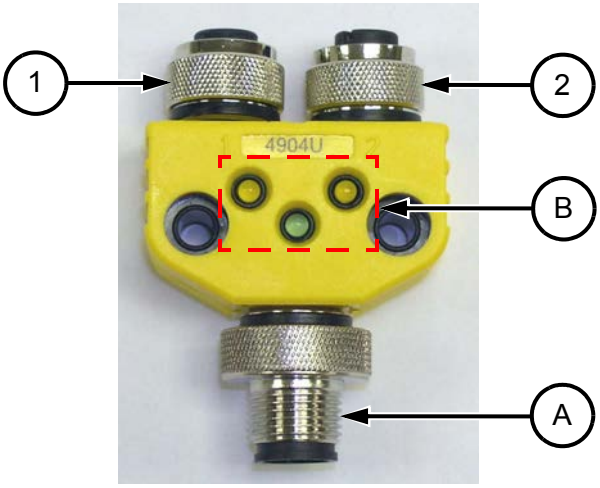

FIGURE 26
CROSS OVER SPLITTER #3416296

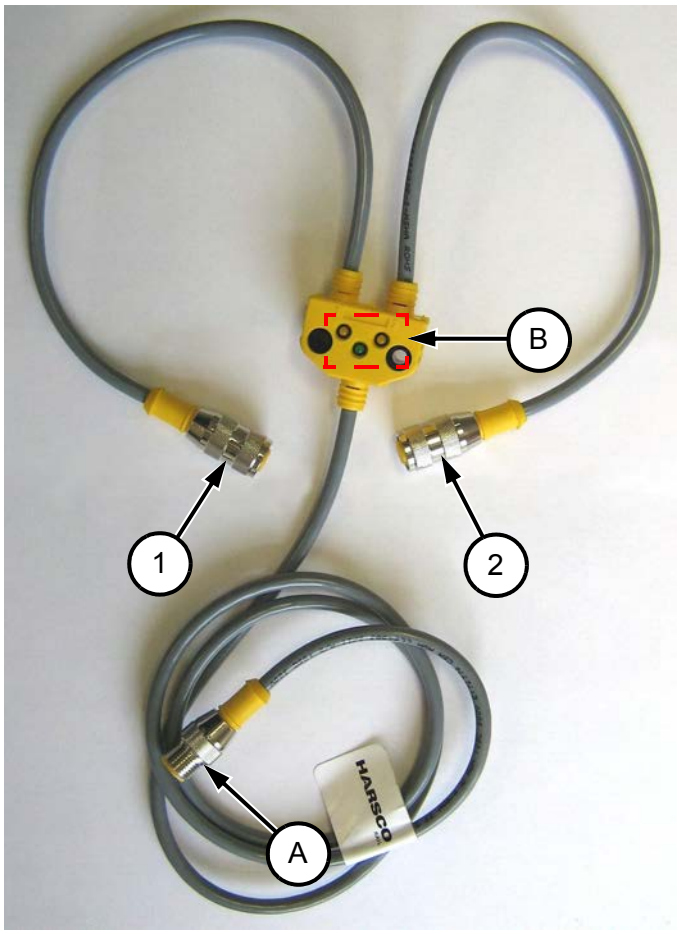

3.1 Jupiter Control System

3.1.17 Cross Over Splitter - See Figures 25, 26, 27 and 28

The Cross Over Splitter is only used with digital input channels. A single cable from a digital input channel of a network module is connected to (A). The cables from two separate devices such as proximity switches, pressure switches, etc. are connected to (1 and 2).

The two input channels #2 and #4 in the single cable (A) are routed to the separate cables (1 and 2) as follows:

Cable (A) input channel #4 is routed only to cable (1) input channel #4.
Cable (A) input channel #2 is routed only to cable (2) input channel #4.

(A) Cable "A" connection from any digital input channel of a network module.
(B) Cable "A" Status LEDs: See Figure 28.
(1) Cable #1 connection to 1st input device.
(2) Cable #2 connection to 2nd input device.

FIGURE 27
SPLITTER SCHEMATIC

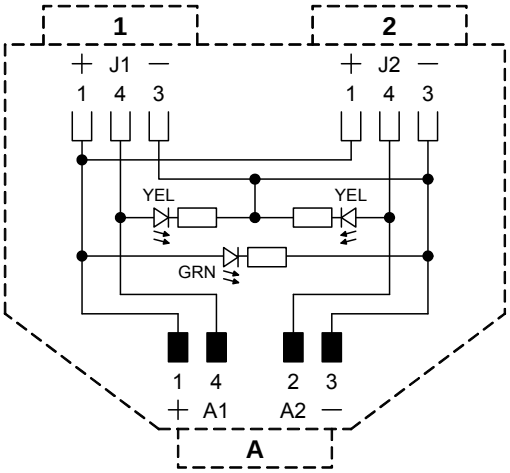

FIGURE 28
CABLE A STATUS LEDs

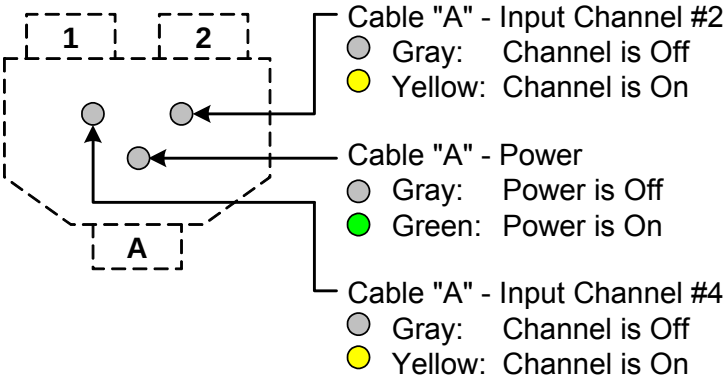

3.1 Jupiter Control System

3.1.18 Jupiter Breakout Box - See Figures 29 and 30

Note: The Jupiter Breakout Box shown below and on the following pages is for the previous version of Jupiter. The Jupiter Breakout Box for Jupiter II will be similar in appearance and function.

1. The Jupiter Breakout Box (1) (#4000552) can be used as a diagnostic tool for troubleshooting inputs and outputs to and from the Jupiter network modules, cables from the modules to the devices and the devices. The Jupiter Breakout Box has both male (2) and female (3) 5 pin connector cables.

2. The Jupiter Breakout Box can be configured as follows:

   a. Connect the Jupiter Breakout Box male connector (2) to the module and the Jupiter Breakout Box female connector (3) directly to the device.

   b. Connect the Jupiter Breakout Box male connector (2) to the module and the Jupiter Breakout Box female connector (3) to the existing cable (4).

   c. Connect the Jupiter Breakout Box male connector (2) to the existing cable (4) and the Jupiter Breakout Box female connector (3) to the device.

FIGURE 29
JUPITER BREAKOUT BOX

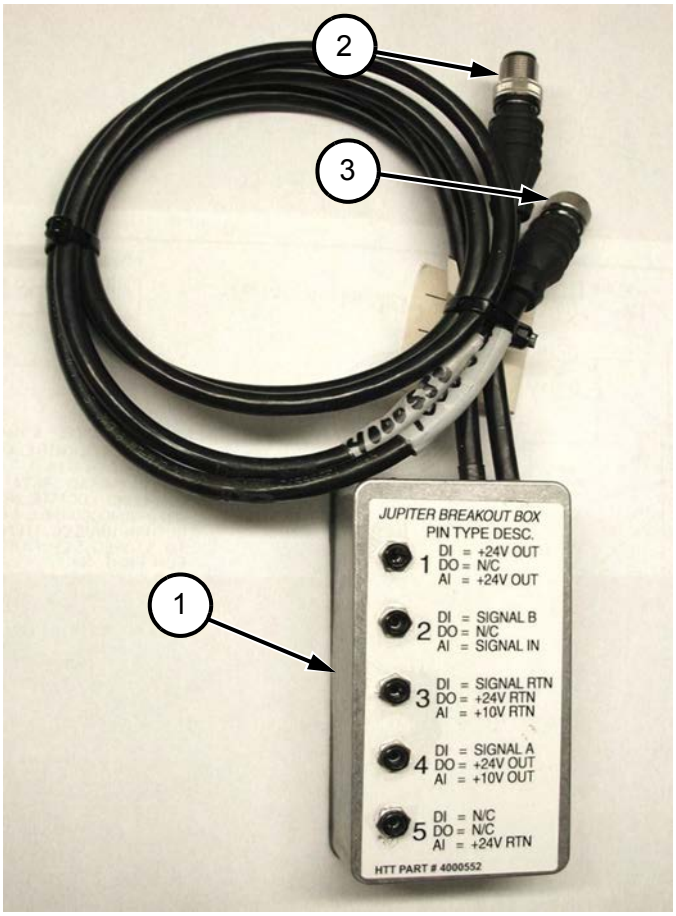

3.1 Jupiter Control System

3.1.18 Jupiter Breakout Box

FIGURE 30
JUPITER BREAKOUT BOX CONNECTIONS

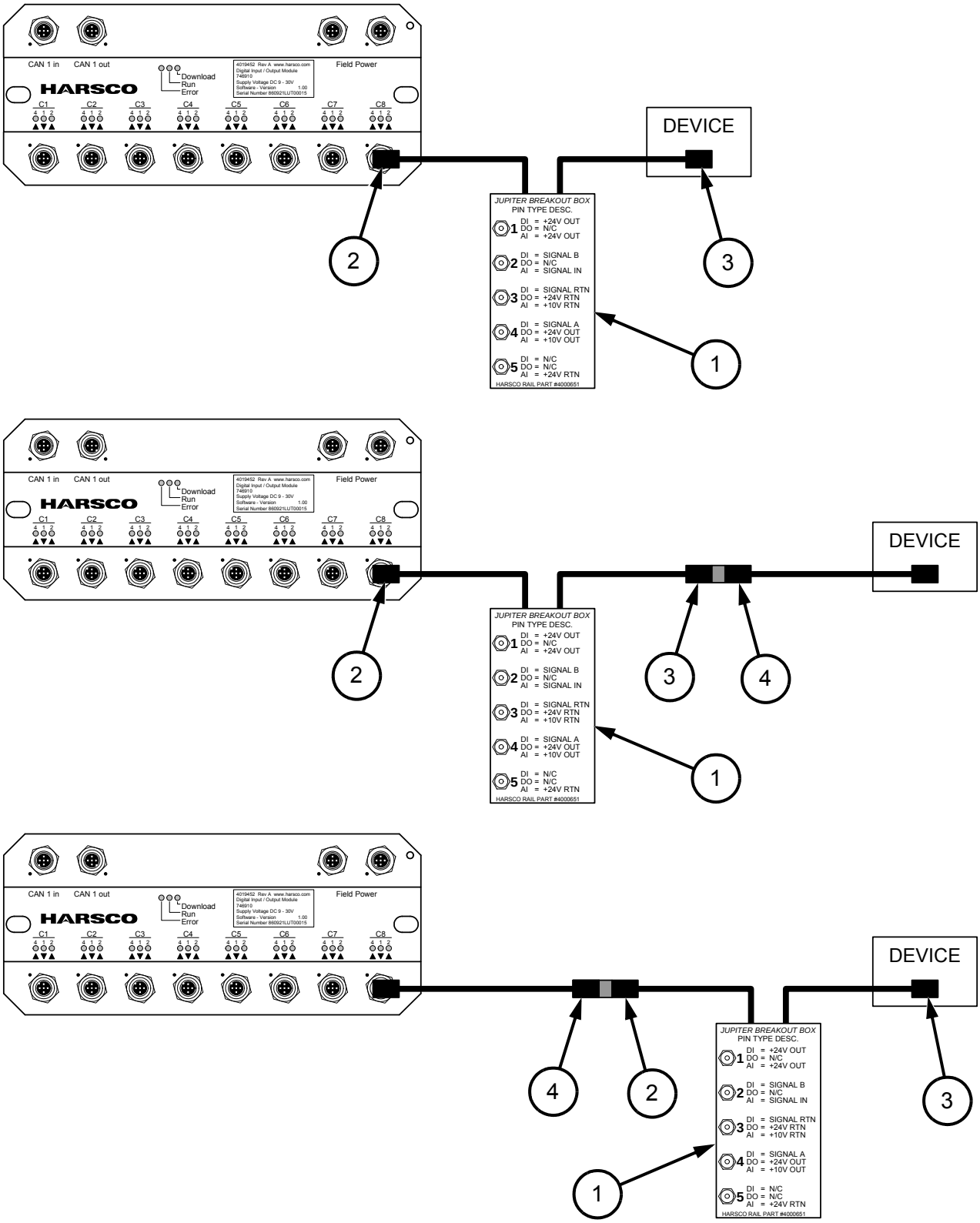

3.1 Jupiter Control System

3.1.18 Jupiter Breakout Box - See Figures 31 and 32

3. Five voltage meter sockets are located on the left side of the Jupiter Breakout Box. Each socket, 1 through 5, can be used tocheck the voltage or signal at their respective pin / wire number of the module, cable or device.

4. With the Jupiter Breakout Box connected in a circuit between a Digital Input / Output Module and an active device, the voltage meter should indicate the following:

   Pin / wire # 1 - +24 volts out
   Pin / wire # 2 - Signal B in
   Pin / wire # 3 - +24 volts to ground (RTN)
   Pin / wire # 4 - Signal A in
   Pin / wire # 5 - No voltage or signal

5. With the Jupiter Breakout Box connected in a circuit between an Analog Input Module and an active device, the voltage meter should indicate the following:

   Pin / wire # 1 - +24 volts out
   Pin / wire # 2 - Signal in
   Pin / wire # 3 - +24 volts to ground (RTN)
   Pin / wire # 4 - +10 volts out
   Pin / wire # 5 - +10 volts to ground (RTN)

6. The Jupiter Breakout Box can also be connected in a circuit between the CAN 2 connector on a module and an active device, the voltage meter should indicate the following:

   Pin / wire # 1 - +24 volts to ground (RTN)
   Pin / wire # 2 - +24 volts out
   Pin / wire # 3 - CAN 2 ground
   Pin / wire # 4 - CAN 2 High
   Pin / wire # 5 - CAN 2 Low

3.1 Jupiter Control System

3.1.18 Jupiter Breakout Box

FIGURE 31
CONNECTOR PIN / WIRE NUMBER DETAIL

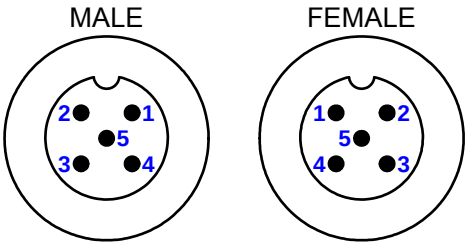

FIGURE 32
JUPITER BREAKOUT BOX

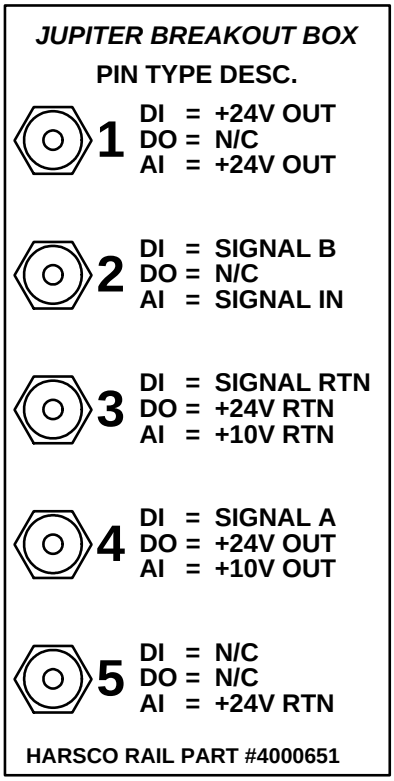

4.1 Jupiter Diagnostic Panels

4.1.1 Accessing Diagnostic Panels - See Figure 33

One of the new features of Jupi ter II is the use of the "F" keys on a keyboard. If a "F" key symbol is shown on the button on the monitor display and a key board is connected to the Jupiter computer, either the button can be pressed on the screen or the "F" key can be used to activate the button function.

The method of accessing the Jupiter Diagnos tic Panels will vary depending on the Jupiter application.

On Some applications, such as on a two car rail grinding consis t, the Miscellaneous Tool Bar Button on the main screen is pressed to display the Diagnostics Panel.

Press the Network Diagnostic Button (1) to display the Network Diagnostic Panel. The Network View, Thumbnail View and Detailed Module Diagnostic Panels are accessible from the Network Diagnostic Panel.

FIGURE 33
TYPICAL RAIL GRINDER DIAGNOSTIC PANEL

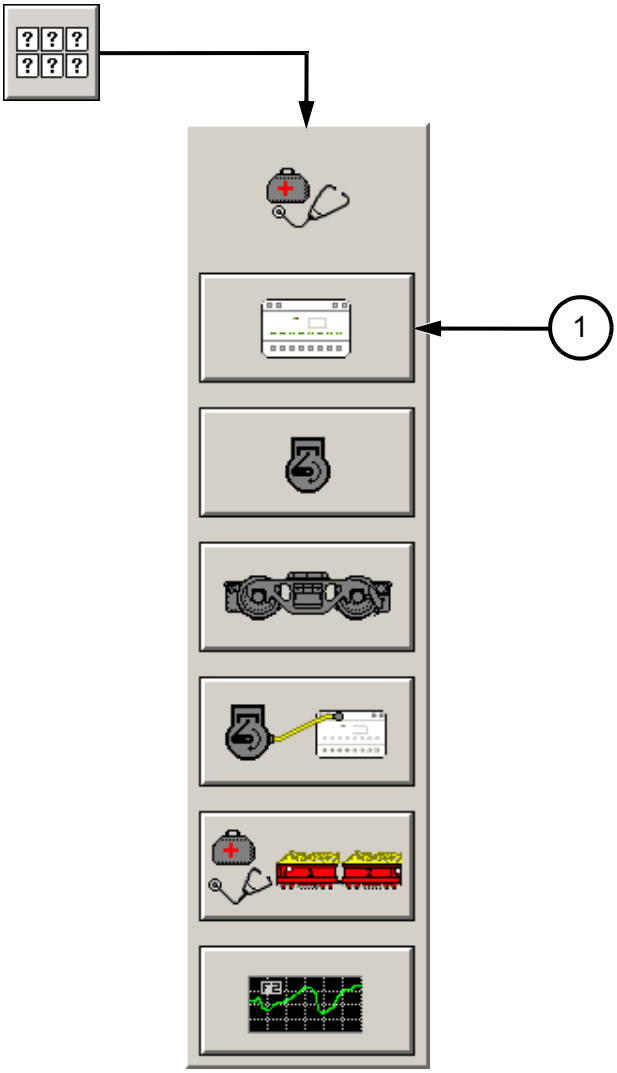

4.1 Jupiter Diagnostic Panels

4.1.1 Accessing Diagnostic Panels - See Figure 34

On other applications, such as the Mark IV T amper, pressing the Diagnostics Button on the Main Screen will display the Diagnostics Panel.

Press the Jupiter Diagnostic Button (1) to display the Network V iew, Thumbnail V iew and Detailed Module Diagnostic Panels.

FIGURE 34
TYPICAL MARK IV DIAGNOSTIC PANEL

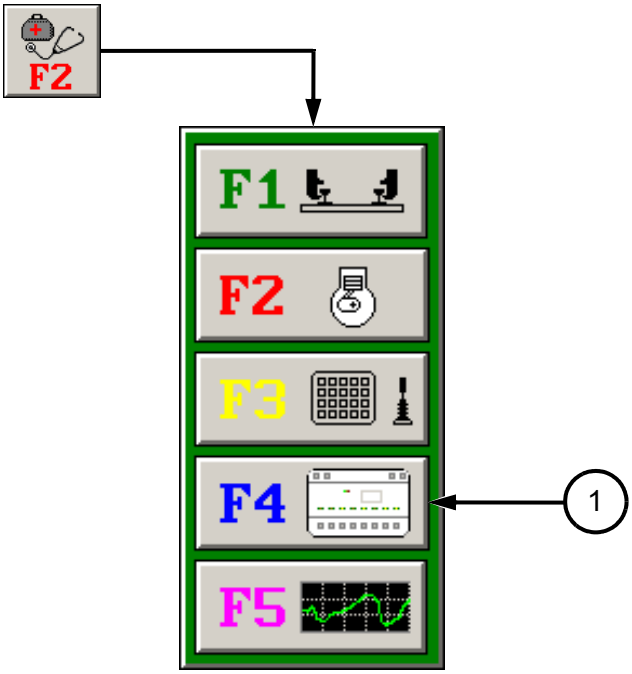

4.1 Jupiter Diagnostic Panels

4.1.2 Network Diagnostic Button / Panel - See Figure 35

On Jupiter applications that have two or more cars and JAM's that make up the total machine consist, such as a two car rail grinder, pressing the Network Diagnostic Button will display the status of the communication network on all cars in the consist. In this example, the left side of the panel displays the communication network of Car #1. The right side of the panel displays the communication network of Car #2. The panel displays the following:

(1) Car Select Network Button: Press the button for Car #1 or Car #2 to display its Network View, Thumbnail View and Detailed Module Diagnostic Panels.

(2) JAM / Ethernet Network: Each JAM has a diagnostic LED that displays the status of communication between the JAM on each car.

- Green - JAM is communicating with the other JAM.
- Gray - JAM is not communicating with the other JAM.

(3) Module Network: Each module has a diagnostic LED that displays the status of communication between the module and the JAM in each car.

- Green - Module is communicating with the JAM and there are no network errors.
- Red - Module is communicating with the JAM and there are one or more errors.
- Gray - Module is not communicating with the JAM.

(4) Engine ECM Network: The engine icon displays the status of communication between the engine ECM and the host module in each car.

- Green - Engine ECM is communicating with the host module.
- Gray - Engine ECM is not communicating with the host module.

4.1 Jupiter Diagnostic Panels

4.1.2 Network Diagnostic Button / Panel

FIGURE 35
NETWORK DIAGNOSTIC PANEL

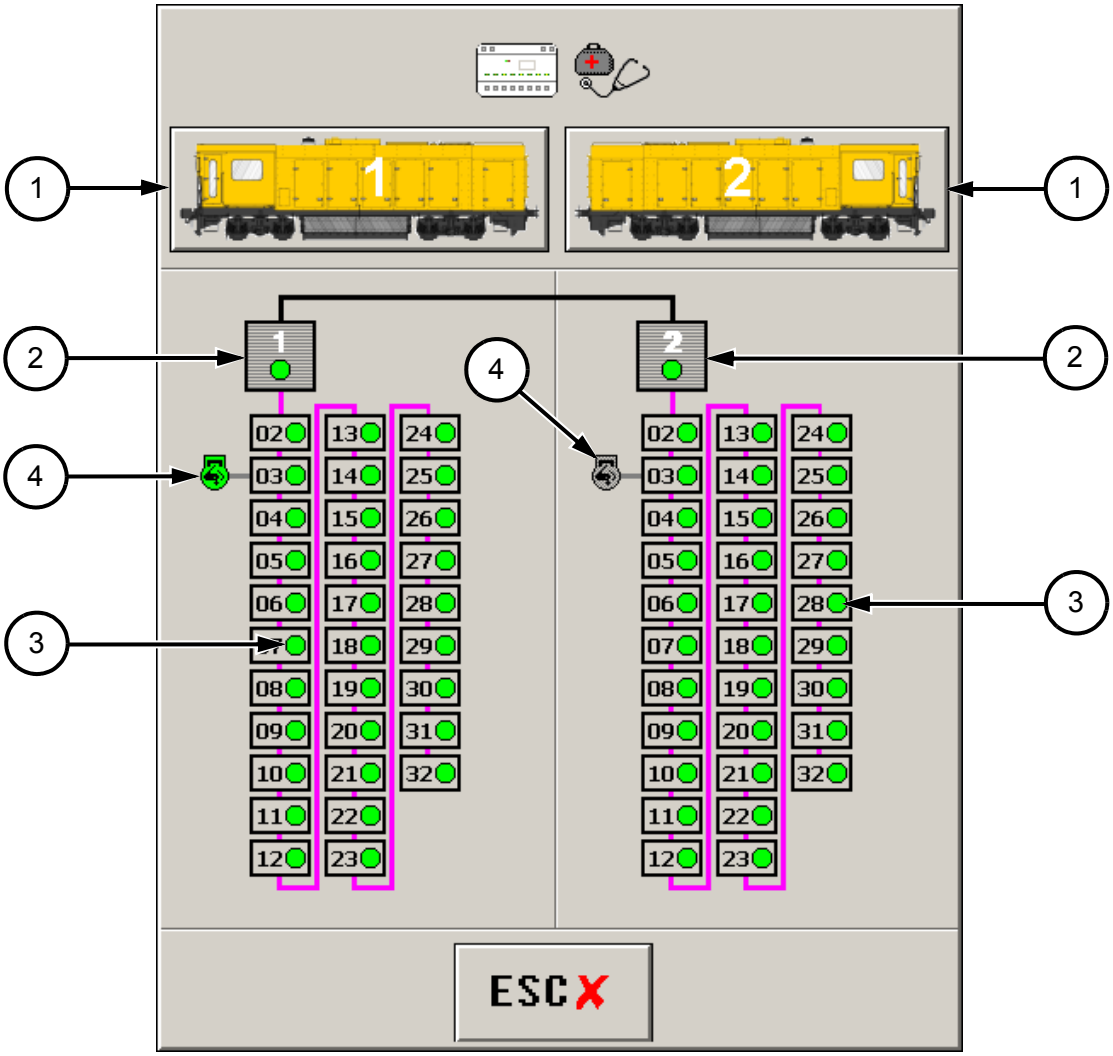

4.1 Jupiter Diagnostic Panels

The Jupiter II Diagnostic Panels from the Mark IV Tamper will be used in this manual to describe the panels. The Jupiter II panels on other machines will be similar in function but may not be displayed the same as these examples.

4.1.3 Network View Diagnostic Button / Panel - See Figure 36

Press the Jupiter Diagnostic Button on the Diagnostic Panel to display the Network View Diagnostic Panel. This panel displays the network from the top view of the machine. The front of the machine is towards the right side of the panel. The panel displays the following:

(1) Zoom Button: Press the Zoom Button or F8 key to switch between the Network View, Thumbnail View or Detailed Module Diagnostic Panels. This button displays the selected Network Module # (highlighted cyan) and the status of its Diagnostic LED.

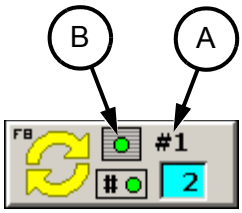

If there is more than one JAM in the network, the JAM and network that is currently being displayed will be shown in the upper portion of the button. The Car / Machine # (A) and the status of its JAM Diagnostic LED (B) will be displayed.

(2) Minus (-) Button: Press the Minus (-) Button to select the previous module in the network.

(3) Plus (+) Button: Press the Plus (+) Button to select the next module in the network.

(4) Jupiter Application Master: Typically, the JAM is located in a junction box or console in the cab on the machine. The JAM contains the operating software and is labeled as address #1. Detailed information cannot be displayed for the JAM.

(5) Power Distribution Tee: The tee is used to help prevent voltage drops in the network by connecting a new power source.

(6) Network Modules: Each module is numbered and has a Diagnostic LED that displays its communication status with the JAM. The module's approximate location on the machine is also shown on the Network View Diagnostic Panel. The currently selected module will be highlighted cyan. Pressing any module on the Network View Diagnostic Panel will display the Detailed Module Diagnostic Panel for that module. The status of the Diagnostic LED is as follows:

- Green - Module is communicating with the JAM and there are no network errors.
- Red - Module is communicating with the JAM and there are one or more errors.
- Gray - Module is not communicating with the JAM.

(7) I/O Information Button: Press the button or F1 key to display an I/O Information Panel on the currently selected module (highlighted cyan) listing the connectors and input / output descriptions. See I/O Information Panel.

4.1 Jupiter Diagnostic Panels

4.1.3 Network View Diagnostic Button / Panel - See Figure 36

(8) I/O Graphing Button: Press the button or F2 key to display an I/O Graphing Panel on the currently selected module (highlighted cyan) to monitor the properties of up to four different channels. See I/O Graphing Panel.

(9) Core Temperature Box: The box displays the core temperature of the selected module.

(10) Module Information Box: The box displays the activation date and the total hours of operation for the displayed module.

(11) Escape Button: Press the Escape Button to remove this panel from the screen.

FIGURE 36
NETWORK VIEW DIAGNOSTIC PANEL

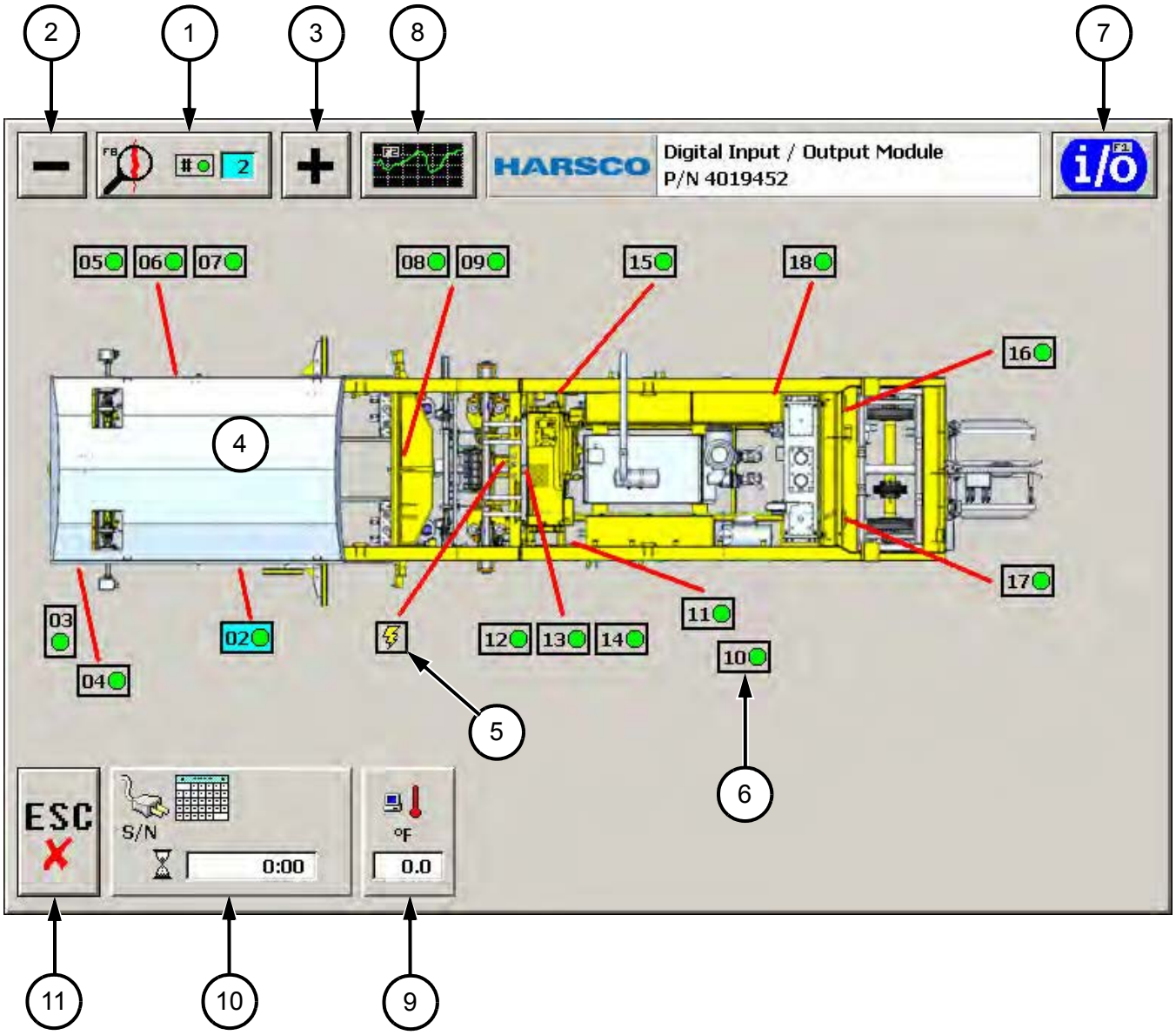

4.1 Jupiter Diagnostic Panels

4.1.4 Thumbnail View Diagnostic Panel - See Figure 37

Press the Zoom Button (1) or F8 on the computer keyboard to switch between the Network View, Thumbnail View or Detailed Module Diagnostic Panels. The Thumbnail View Diagnostic Panel displays a quick view of all of the modules in the network. The panel displays the following:

(1) Zoom Button: Press the Zoom Button or F8 on the computer keyboard to switch between the Network View, Thumbnail View or Detailed Module Diagnostic Panels. This button displays the selected Network Module # (highlighted cyan) and the status of its Diagnostic LED.

(2) Minus (-) Button: Press the Minus (-) Button to select the previous module in the network.

(3) Plus (+) Button: Press the Plus (+) Button to select the next module in the network.

(4) Network Modules: Each module is numbered and has a Diagnostic LED that displays its communication status with the JAM. The currently selected module will be highlighted cyan. Pressing any module on the Network View Diagnostic Panel will display the Detailed Module Diagnostic Panel for that module. The status of the Diagnostic LED is as follows:

- Green - Module is communicating with the JAM and there are no network errors.
- Red - Module is communicating with the JAM and there are one or more errors.
- Gray - Module is not communicating with the JAM.

a. Analog Input Module: This thumbnail displays small voltage sliders. The sliders indicate the current voltage of the channels on the module which match the voltage sliders on the corresponding Detailed Module Diagnostic Panel.

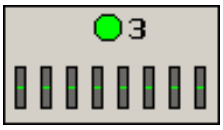

b. Digital I/O Module: This thumbnail displays small channel LEDs. The LEDs indicate the status of the channels on the module which match the channel LED indicators on the corresponding Detailed Module Diagnostic Panel.

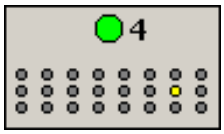

c. Digital I/O Module with Scanner Board: This thumbnail displays a column of 3 miniature LEDs for each of the configured direct outputs. The tiny LED in the center of the column illuminates yellow when the output is ON and dark gray when the output is OFF. The center LED is shown RED when the output channel has an I/O fault. The upper and lower LEDs do not illuminate. The columns display the current inputs for each of the scanned input plugs. Inputs that are on are displayed Green. Off channels are dark gray.

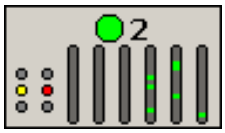

4.1 Jupiter Diagnostic Panels

4.1.4 Thumbnail View Diagnostic Panel - See Figure 37

d. HD (High Density) Digital I/O Module: This thumbnail displays small channel LEDs. The LEDs indicate the status of the channels on the module which match the channel LED indicators on the corresponding Detailed Module Diagnostic Panel.

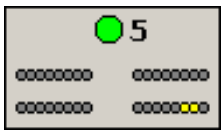

e. Digital to Analog Output Module: The small sliders on this thumbnail display a miniature view of the +/-10 volt output presently being driven on each connector.

FIGURE 37
THUMBNAIL VIEW DIAGNOSTIC PANEL

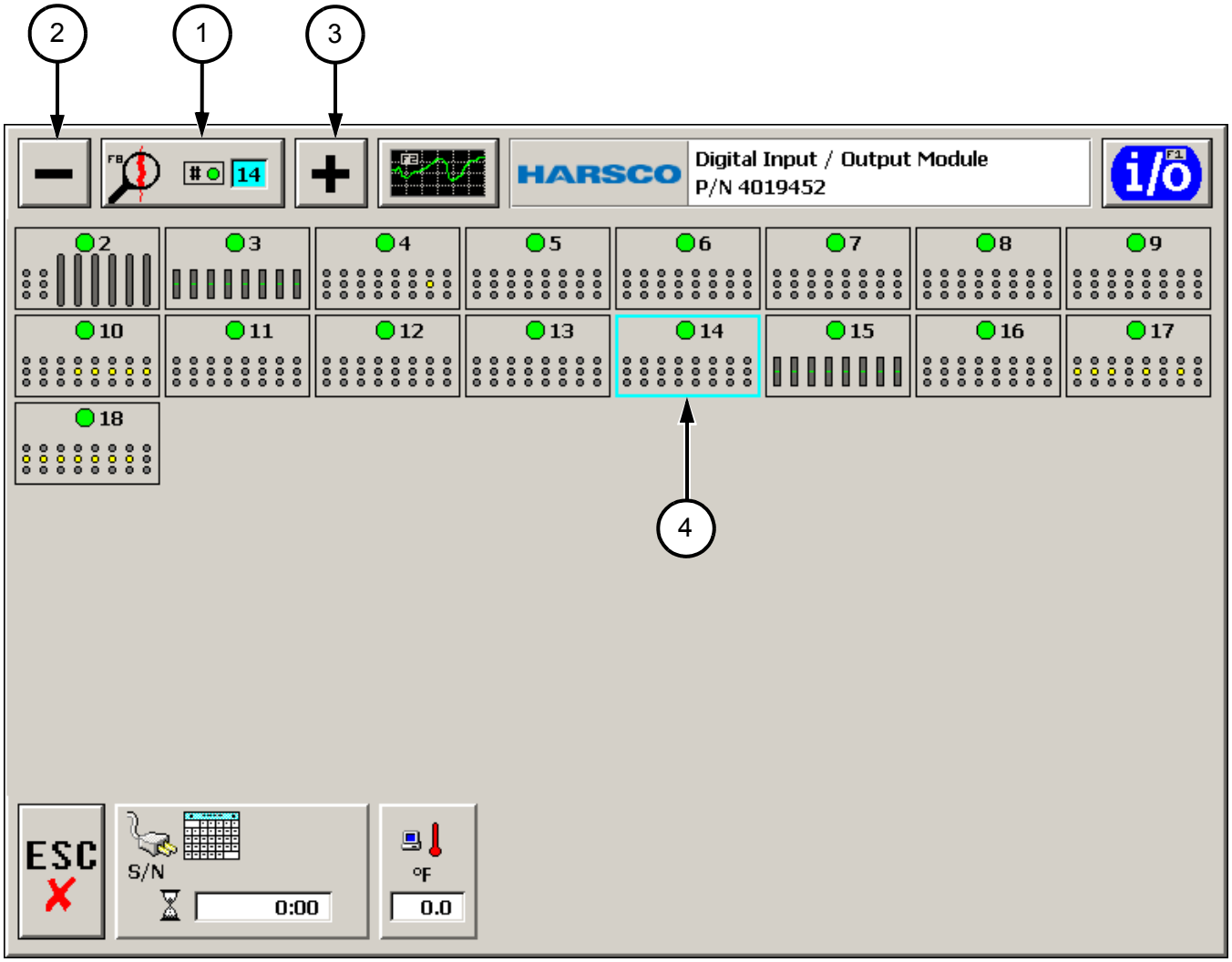

4.1 Jupiter Diagnostic Panels

4.1.4 Thumbnail View Diagnostic Panel - See Figure 38

(5) I/O Information Button: Press the button or F1 key to display an I/O Information Panel for the currently selected module (highlighted cyan) listing the connectors and input / output descriptions. See I/O Information Panel.

(6) I/O Graphing Button: Press the button or F2 key to display an I/O Graphing Panel for the currently selected module (highlighted cyan) to monitor the properties of up to four different channels. See I/O Graphing Panel.

(7) Core Temperature Box: The box displays the core temperature of the selected module.

(8 Module Information Box: The box displays the module's manufacturing test date, the module serial number and the total hours of operation for the displayed module

(9) Escape Button: Press the Escape Button to remove this panel from the screen.

4.1 Jupiter Diagnostic Panels

4.1.4 Thumbnail View Diagnostic Panel

FIGURE 38
THUMBNAIL VIEW DIAGNOSTIC PANEL

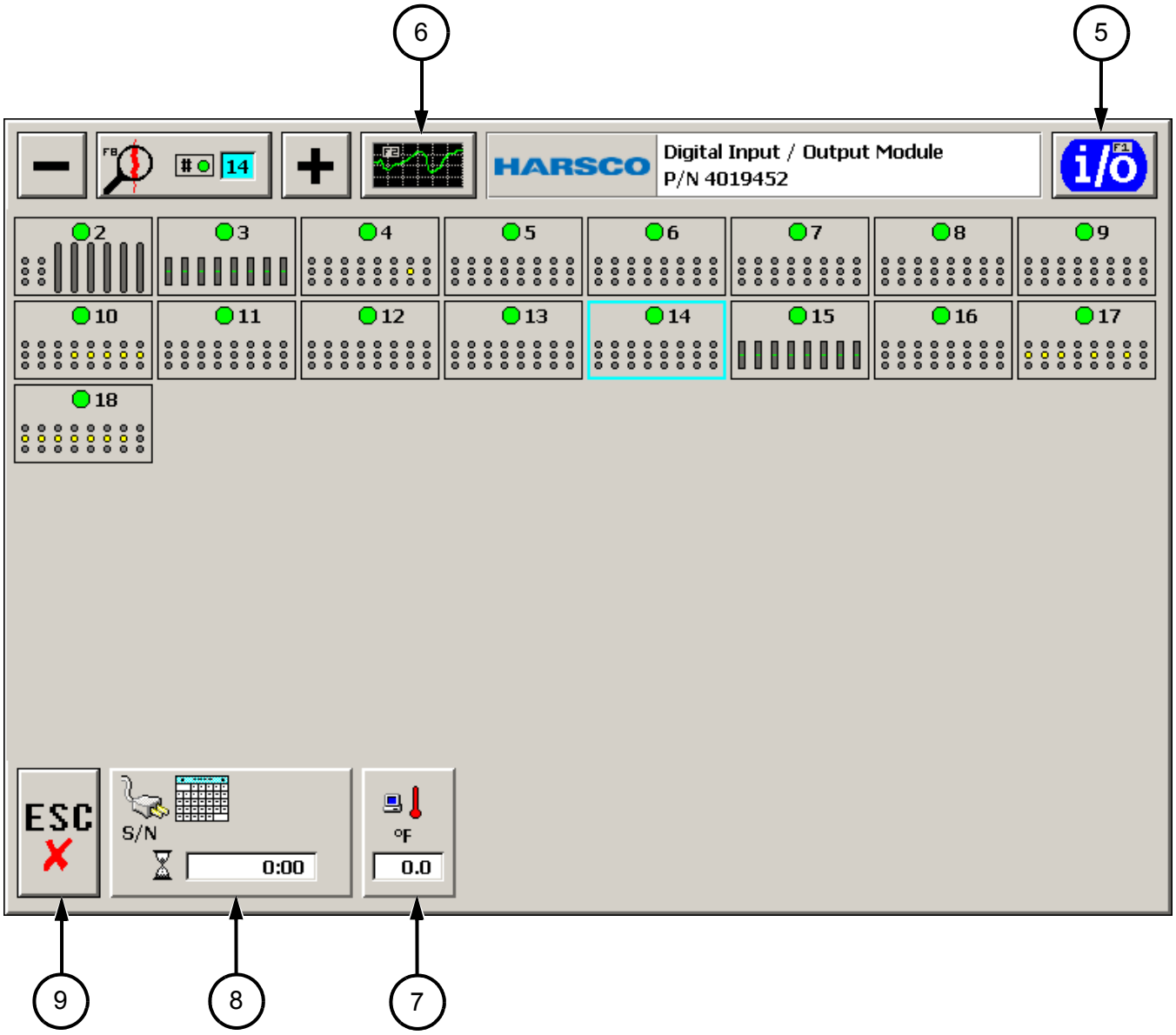

4.1 Jupiter Diagnostic Panels

4.1.5 Analog Input Module Diagnostic Panel - See Figure 39

Press the Zoom Button or F8 key to switch between the Network View, Thumbnail View or Detailed Module Diagnostic Panels. The Analog Module Diagnostic Panel displays diagnostic information for an analog input module. If the currently selected module is not communicating with the JAM, information boxes and sliders will not be visible. The panel displays the following:

(1) Zoom Button: Press the Zoom Button or F8 key to switch between the Network View, Thumbnail View or Detailed Module Diagnostic Panels. This button displays the selected Network Module # (highlighted cyan) and the status of its Diagnostic LED.

(2) Minus (-) Button: Press the Minus (-) Button to select the previous module in the network.

(3) Plus (+) Button: Press the Plus (+) Button to select the next module in the network.

(4) Information Table: The table displays from left to right; the connector number and the graphical digital signal value in volts.

(5) Connectors and Pin Identification (C1 - C8): A description of the connector pin layout is located above the connectors.

(6) I/O Information Button: Press the button or F1 key to display an I/O Information Panel for the currently selected module (highlighted cyan) listing the connectors and input / output descriptions. See I/O Information Panel.

(7) I/O Graphing Button: Press the button or F2 key to display an I/O Graphing Panel for the currently selected module (highlighted cyan) to monitor the properties of up to four different channels. See I/O Graphing Panel.

(8) 10 Volt Power Box: The box displays the status of the 10 volt power with the actual voltage displayed in the information box. A gray box indicates the voltage is within acceptable limits. A flashing yellow box indicates the voltage is not within acceptable limits.

(9) 24 Volt Power Box: The box displays the status of the 24 volt power with the actual voltage displayed in the information box. A gray box indicates the voltage is within acceptable limits. A flashing yellow box indicates the voltage is not within acceptable limits.

(10) Core Temperature Box: The box displays the core temperature of the displayed module.

(11) Module Information Box: The box displays the activation date and the total hours of operation for the displayed module

(12) Escape Button: Press the Escape Button to remove this panel from the screen.

4.1 Jupiter Diagnostic Panels

4.1.5 Analog Input Module Diagnostic Panel

FIGURE 39
ANALOG INPUT MODULE DIAGNOSTIC PANEL

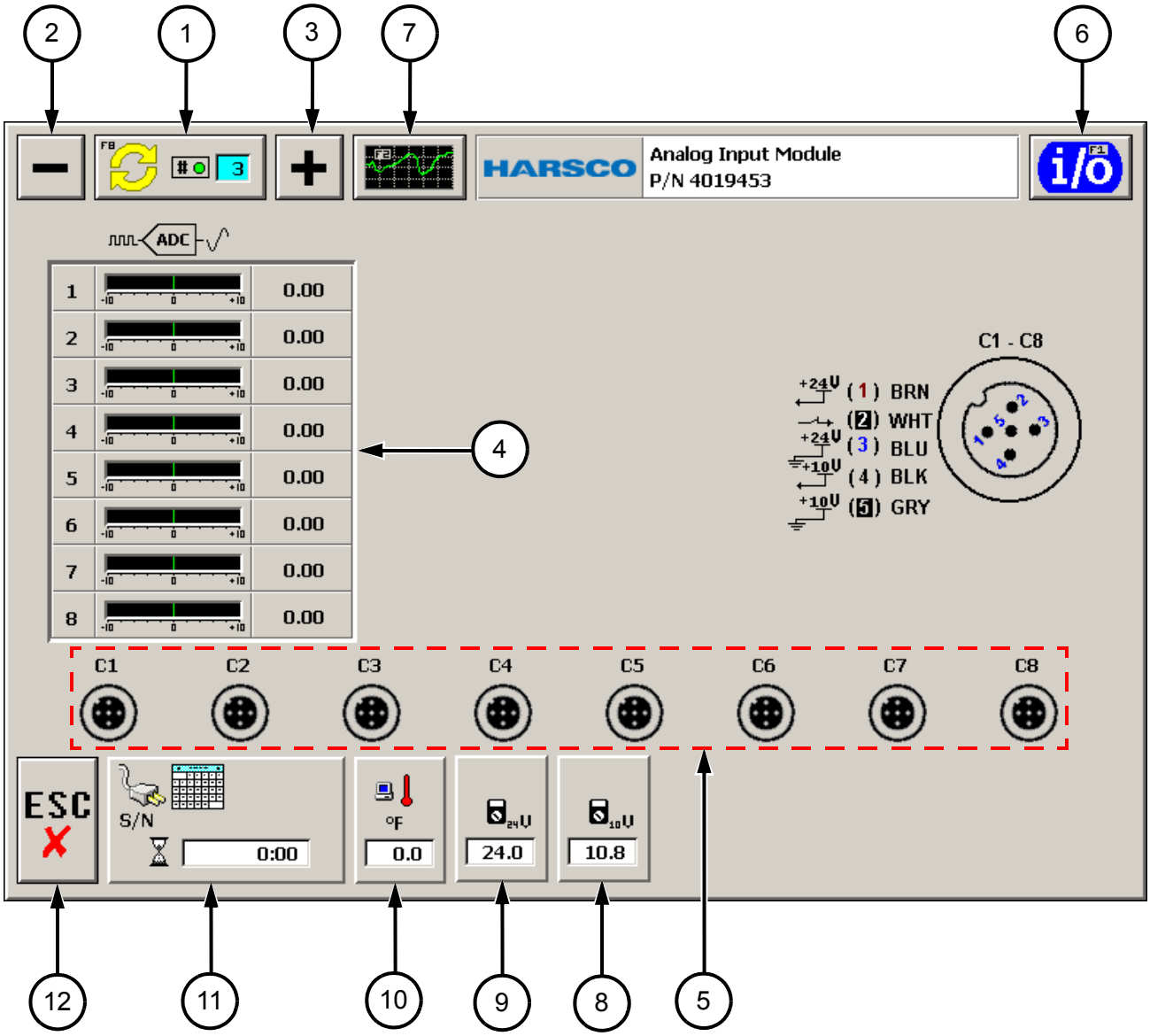

4.1 Jupiter Diagnostic Panels

4.1.5.1 Analog Input Module Can 2 Diagnostic Panel - See Figure 40

The Analog Input Module can communicate with other analog input devices, such as an engine ECM, through its Can 2 connector. When connected, the Can 2 Diagnostic Panel is displayed in the upper right corner of the panel.

(13) Can 2 Diagnostic Panel: The diagnostic LED indicators show the communication status of the Can 2 link between the host module and the other device. The status of the LEDs are as follows:

(A) ERR LED Indicator:
- Gray - Normal operating state exists.
- Red - Bus error condition exists. Module cannot communicate with any target devices. This is often caused by a short circuit between the CAN H and CAN L wires somewhere in the network cabling or plugs. The TXD and RXD LEDs may also show solid red when a bus error condition exists. The WRN LED may blink during bus error conditions, indicating unsuccessful attempts to restart communication.

(B) WRN LED Indicator:
- Gray - Normal operating state exists.
- Red - Bus warning condition exists. Bus warnings often indicate broken or disconnected cables or incorrect wiring of the CAN H and CAN L signals. This condition may also occur briefly when there are intermittent communication errors detected between the module and one or more target devices. Incorrect target device address settings, bad hardware, or cable problems may be the cause.

(C) TXD LED Indicator:
- Green - Module has successfully transmitted at least one message to a target device.
- Red - Module transmissions were previously OK but presently faulty. A fault may occur when either the ERR or WRN LEDs are red or when a device on the Can 2 network cannot be contacted.
- Gray - Module has not yet transmitted a message.

(D) RXD LED Indicator:
- Green - Module is receiving messages from connected devices.
- Red - Module was receiving messages OK but presently faulty. A fault condition may arise when either the ERR or WRN LEDs are red or when the driver software on the module is receiving incorrect messages from devices on the Can 2 network.
- Gray - Module has not received a message yet.

4.1 Jupiter Diagnostic Panels

4.1.5.1 Analog Input Module Can 2 Diagnostic Panel - See Figure 40

(E) ONL LED Indicator:
- Green - Module has established its online presence on the Can 2 network.
- Red - Module was previously online and is reconnecting.
- Gray - Module has not yet gone online.

The pins in the Can 2 plug are assigned as follows:
Pin 1 - field power common.
Pin 2 - 24V field power.
Pin 3 - CAN ground.
Pin 4 - CAN H signal.
Pin 5 - CAN L signal.

FIGURE 40
ANALOG INPUT MODULE CAN 2 DIAGNOSTIC PANEL

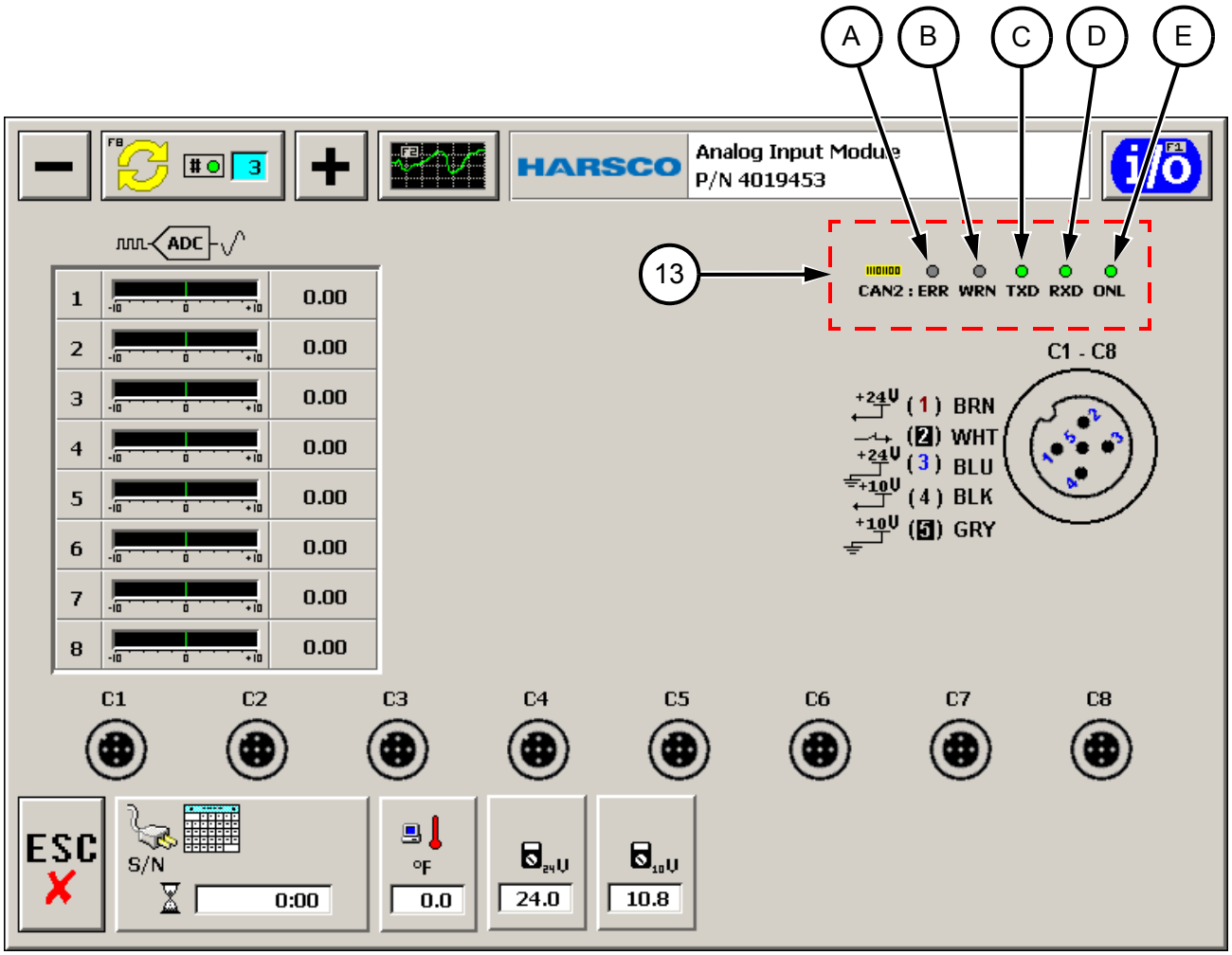

4.1 Jupiter Diagnostic Panels

4.1.6 Digital Input / Output Module Diagnostic Panel - See Figure 41

Press the Zoom Button or F8 key to switch between the Network View, Thumbnail View or Detailed Module Diagnostic Panels. The Digital Input / Output Module Diagnostic Panel displays diagnostic information for a digital input / output module. If the currently selected module is not communicating with the JAM, information boxes and status LEDS will not be visible. The panel displays the following:

(1) Zoom Button: Press the Zoom Button or F8 key to switch between the Network View, Thumbnail View or Detailed Module Diagnostic Panels. This button displays the selected Network Module # (highlighted cyan) and the status of its Diagnostic LED.

(2) Minus (-) Button: Press the Minus (-) Button to select the previous module in the network.

(3) Plus (+) Button: Press the Plus (+) Button to select the next module in the network.

(4) Information Table (C1 - C8): The table displays from left to right, the connector number, channel number, PWM duty cycle, load in amperes, ground short circuit counts, open circuit counts, and 24V short circuit counts. A channel that has a short or open circuit will highlight yellow in the column box. When the short or open circuit has been corrected, it will highlight white. The computer must be re-booted to clear the short and/or open circuit counts from the table. The status of the short and open circuit column boxes are follows:

Gray - No Short Circuit On Connector.
Yellow - Short Circuit On Connector.
White - Short Circuit On Connector Has Been Corrected.

When a short circuit occurs, the module will immediately turn off the output channel for 2 seconds to protect the wiring and allow it to cool. After this 2 second period expires, the output will be reactivated if the JAM is still commanding the output ON. If the short circuit still exists, this cycle will repeat. In this case, the error counts will appear to clear and count up once every two seconds.

Open circuits are detected whenever an output is activated ON but not when the output is OFF. Some outputs on the machine may not draw sufficient current to accurately detect an open circuit (such as relays). Consult your machine handbook for information on specific channels that do not report open circuits.

A digital output module will latch and report the open circuit error status when it occurs. As long as the JAM is commanding the output ON, this open circuit status may clear and reactivate, and the error counter will increment in the diagnostic table. This condition indicates an intermittent open.

However, if the open circuit status was latched and the JAM turned OFF the output before continuity was restored, the open will continue to be reported on the diagnostic panel. The output must be turned ON again for the open status to be detected again and cleared when continuity is restored.

4.1 Jupiter Diagnostic Panels

4.1.6 Digital Input / Output Module Diagnostic Panel - See Figure 41

The “24 volt” short status is detected whenever the JAM is commanding the output OFF. This diagnostic means an outside source is powering the output when it should not be powered. Similar to an open circuit fault, a 24 volt short fault is latched and may clear while the output is OFF, and will persist while the output is ON until it is turned OFF again by the JAM.

The manual diagnostics can be used to manually test a channel having an open or 24 volt short in an attempt to clear a fault from the panel.

FIGURE 41
DIGITAL INPUT / OUTPUT MODULE DIAGNOSTIC PANEL

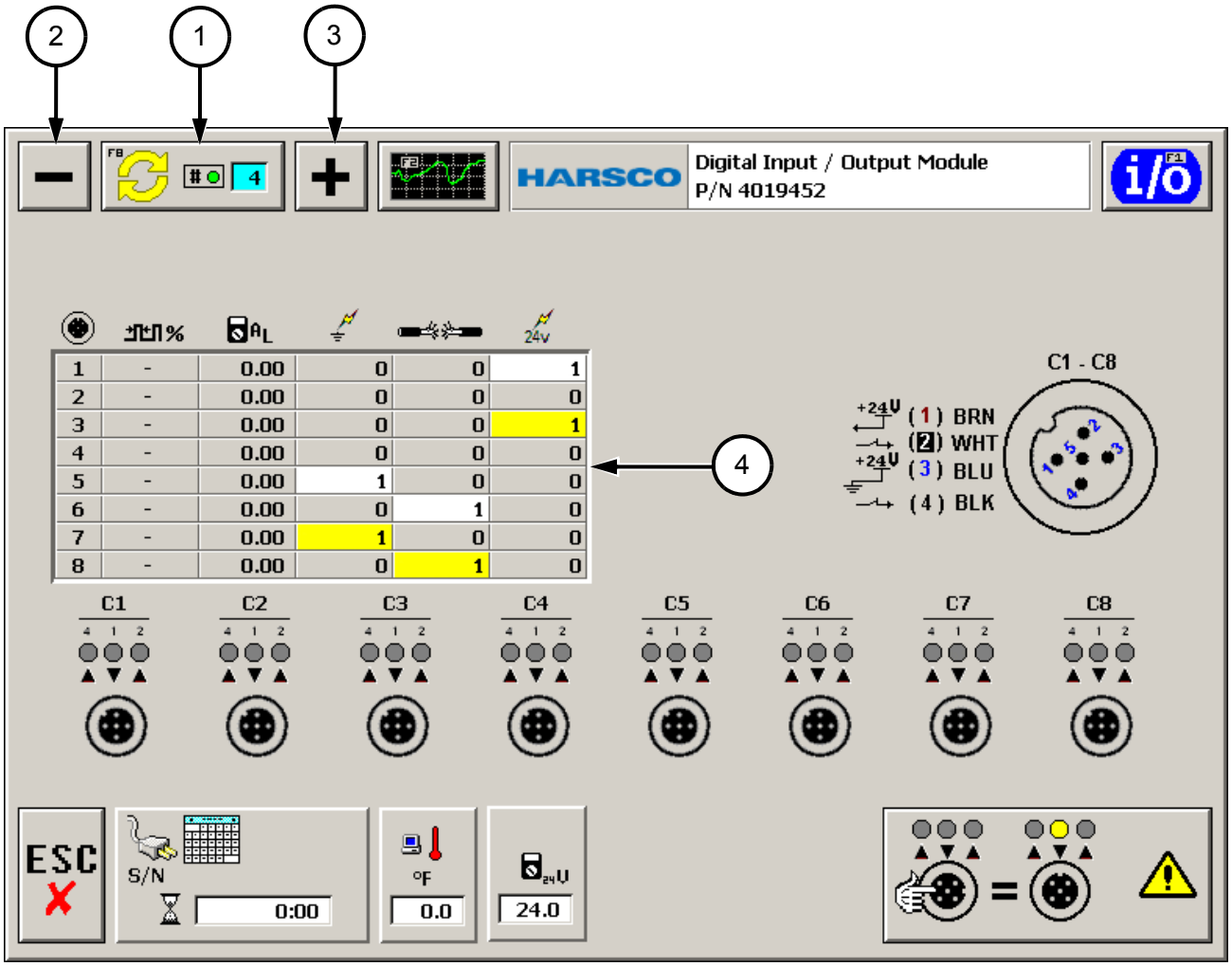

4.1 Jupiter Diagnostic Panels

4.1.6 Digital Input / Output Module Diagnostic Panel - See Figure 42

(5) Connectors, Pins and Channel LEDs (C1 - C8): A description of the connector pin layout is located above the connectors. Each connector can be used as a digital input or output channel indicated by the direction of the Channel Arrows below the Channel LEDs. The Channel LEDs display the communication status of the connector's channels. The status of the Channel Arrows and Channel LEDs are as follows:

Input Channel LED Indicator and Arrow - Pin #2 or #4:
- ▲ Gray - Channel Is Off.
- Green - Channel Is On.

Output Channel LED Indicator and Arrow - Pin #1:
- ▼ Gray - Channel Is Off.
- Yellow - Channel Is On.
- Red - Power Fault.

(6) I/O Information Button: Press the button or F1 key to display an I/O Information Panel on the currently selected module (highlighted cyan) listing the connectors and input / output descriptions. See I/O Information Panel.

(7) I/O Graphing Button: Press the button or F2 key to display an I/O Graphing Panel on the currently selected module (highlighted cyan) to monitor the properties of up to four different channels. See I/O Graphing Panel.

(8) Diagnostic Button: Press the button to enable the Diagnostic Test Mode. The button will appear pressed in. Touch the desired Connector Icon, C1 - C8, (such as C8) to toggle the present state of the output channel (pin #1) to its opposite state. Thus, if the output is commanded by the JAM to be ON, pressing the connector icon will turn the output OFF, and vice versa.

When completed, press button (8) again to disable the Diagnostic Test Mode. The button will appear popped out.

CAUTION

- **THE MACHINE IS "LIVE" AND COMPONENTS MAY ACTIVATE WHEN IN THE DIAGNOSTIC TEST MODE. ENSURE ALL PERSONNEL ARE CLEAR OF POTENTIAL DANGEROUS AREAS AND THAT ALL APPROPRIATE SAFETY MEASURES ARE TAKEN PRIOR TO USING THE DIAGNOSTIC TEST MODE. FAILURE TO COMPLY COULD RESULT IN BODILY INJURY AND/OR PROPERTY DAMAGE.**

(9) 24 Volt Power Box: The box displays the status of the 24 volt power with the actual voltage displayed in the information box. A gray box indicates the voltage is within acceptable limits. A flashing yellow box indicates the voltage is not within acceptable limits.

4.1 Jupiter Diagnostic Panels

4.1.6 Digital Input / Output Module Diagnostic Panel - See Figure 42

(10) Core Temperature Box: The box displays the core temperature of the displayed module.

(11) Module Information Box: The box displays the activation date and the total hours of operation for the displayed module

(12) Escape Button: Press the Escape Button to remove this panel from the screen.

FIGURE 42
DIGITAL INPUT / OUTPUT MODULE DIAGNOSTIC PANEL

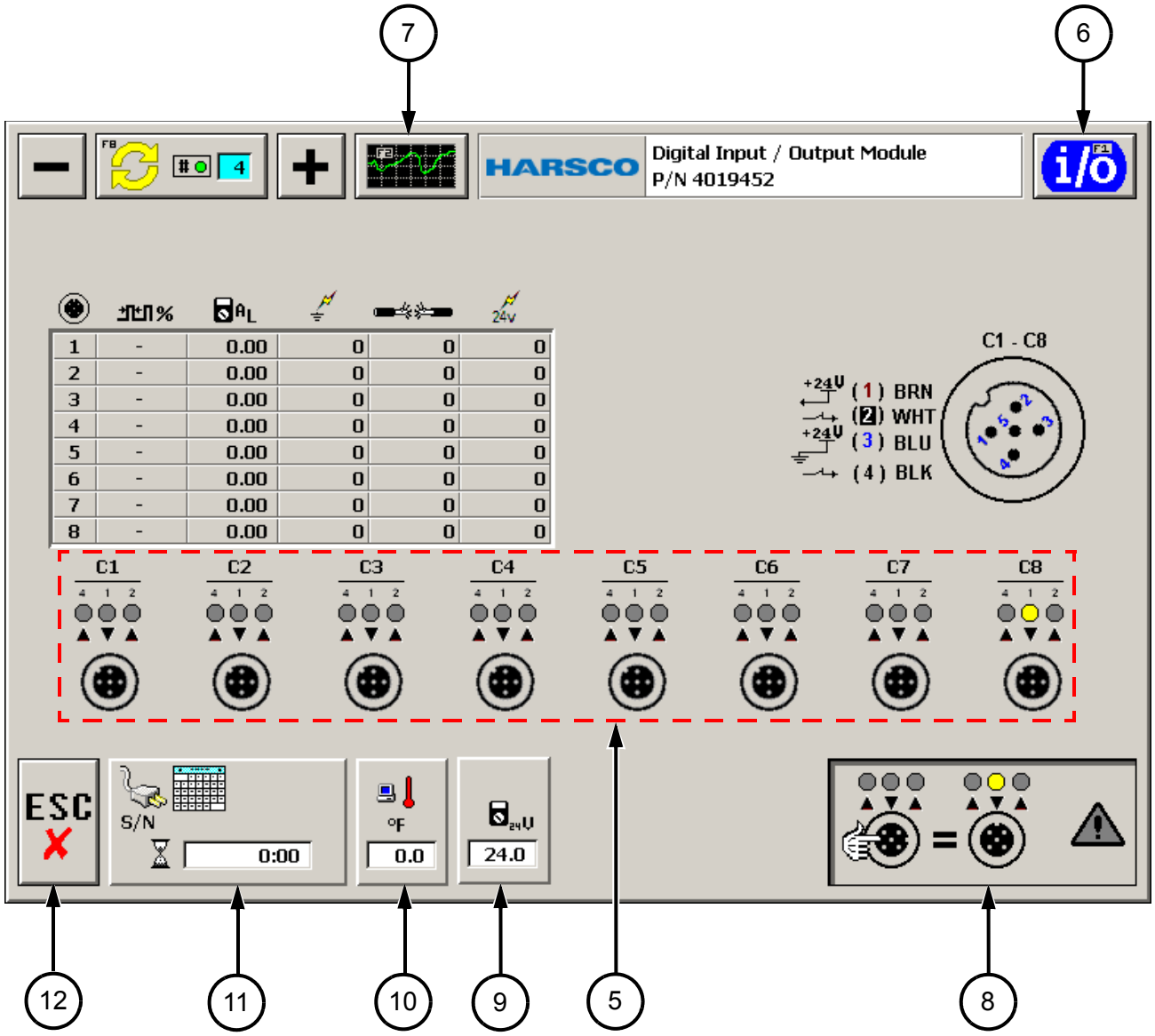

4.1 Jupiter Diagnostic Panels

4.1.6.1 Digital Input / Output Module With Scanner Board - See Figure 43

1. On some Jupiter applications, a Digital Input / Output Module may have a “Scanner Board" attached. The board consumes all 8 of the Digital I/O output plugs and functions as a multiplex device that expands the digital input capability of this module from 16 inputs up to 128, 24 volt inputs. The inputs are deemed as “scanned” because the output on each plug is strobed temporarily to activate the corresponding input connector, at which time a snapshot of any active inputs is stored for that plug.

2. This board is primarily used to collect a large number of inputs from devices such as toggle switches, buttons, and joysticks from an operator’s control console. Devices may be wired to any one of the eight “IC” plugs (1) depending upon the machine design. When an input signal is on, the LED (2) to the right of the input’s pin number is illuminated Green.

3. A machine may support special devices which may be connected via a ribbon cable to plugs (3) shown at the top and far right of this panel. Each input from one of these special devices shares an internal physical connection with a pin on an IC plug, so its diagnostic status is displayed on this pin even though it appears there is no wire connection to the actual pin on the IC plug.

4. On some machines, an IC plug may have an output driven by pin 18 (4) on the IC plug. On the illustrated panel, IC1 and IC2 are configured to drive a direct output instead of scanning inputs from pins 1 through 16. The output is ON when the pin 18 LED is Yellow and OFF when the pin 18 LED is Gray. If an error is detected on the output, then the pin 18 LED will be illuminated Red.

5. To see details of any output errors, press the change view button (5). This button toggles the diagnostic view between the standard Digital Input / Output Module diagnostic display and the scanner board display. Pressing the F3 key will also activate this button. All other buttons on this panel function as they normally would on the standard Digital Input / Output Module Diagnostic Panel.

4.1 Jupiter Diagnostic Panels

4.1.6.1 Digital Input / Output Module With Scanner Board

FIGURE 43
DIGITAL INPUT / OUTPUT MODULE WITH SCANNER BOARD

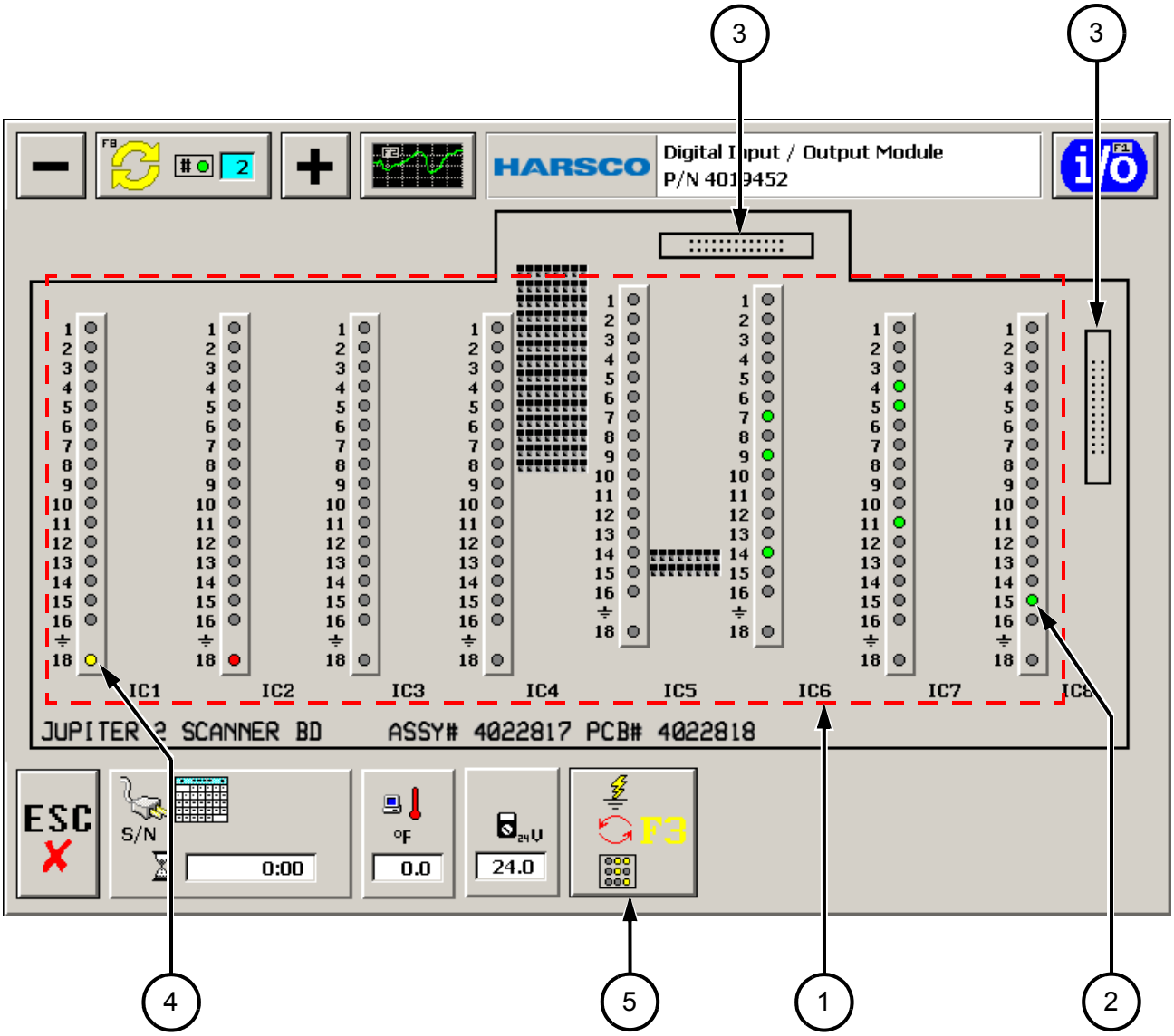

4.1 Jupiter Diagnostic Panels

4.1.7 HD (High Density) Digital Input / Output Module Diagnostic Panel - See Figure 44

Press the Zoom Button or F8 key to switch between the Network View, Thumbnail View or Detailed Module Diagnostic Panels. The HD (High Density) Digital Input / Output Module Diagnostic Panel displays diagnostic information for a high density digital input / output module. If the currently selected module is not communicating with the JAM, information boxes and status LEDS will not be visible. The panel displays the following:

(1) Zoom Button: Press the Zoom Button or F8 key to switch between the Network View, Thumbnail View or Detailed Module Diagnostic Panels. This button displays the selected Network Module # (highlighted cyan) and the status of its Diagnostic LED.

(2) Minus (-) Button: Press the Minus (-) Button to select the previous module in the network.

(3) Plus (+) Button: Press the Plus (+) Button to select the next module in the network.

(4) Connectors, Pins and Channel LEDs (C1 - C4): Each connector has eight channels that can be used as a digital input or output channel indicated by the direction of the Channel Arrows below the Channel LEDs. The Channel LEDs display the communication status of the connector's channels. The status of the Channel Arrows and Channel LEDs are as follows:

● Input Channel LED Indicator and Arrow:
▲ ● Gray - Channel Is Off.
● Green - Channel Is On.

● Output Channel LED Indicator and Arrow:
▼ ● Gray - Channel Is Off.
● Yellow - Channel Is On.
● Red - Power Fault.

(5) I/O Information Button: Press the button or F1 key to display an I/O Information Panel on the currently selected module (highlighted cyan) listing the connectors and input / output descriptions. See I/O Information Panel.

(6) I/O Graphing Button: Press the button or F2 key to display an I/O Graphing Panel on the currently selected module (highlighted cyan) to monitor the properties of up to four different channels. See I/O Graphing Panel.

4.1 Jupiter Diagnostic Panels

4.1.7 HD (High Density) Digital Input / Output Module Diagnostic Panel

FIGURE 44
HD DIGITAL INPUT / OUTPUT MODULE DIAGNOSTIC PANEL

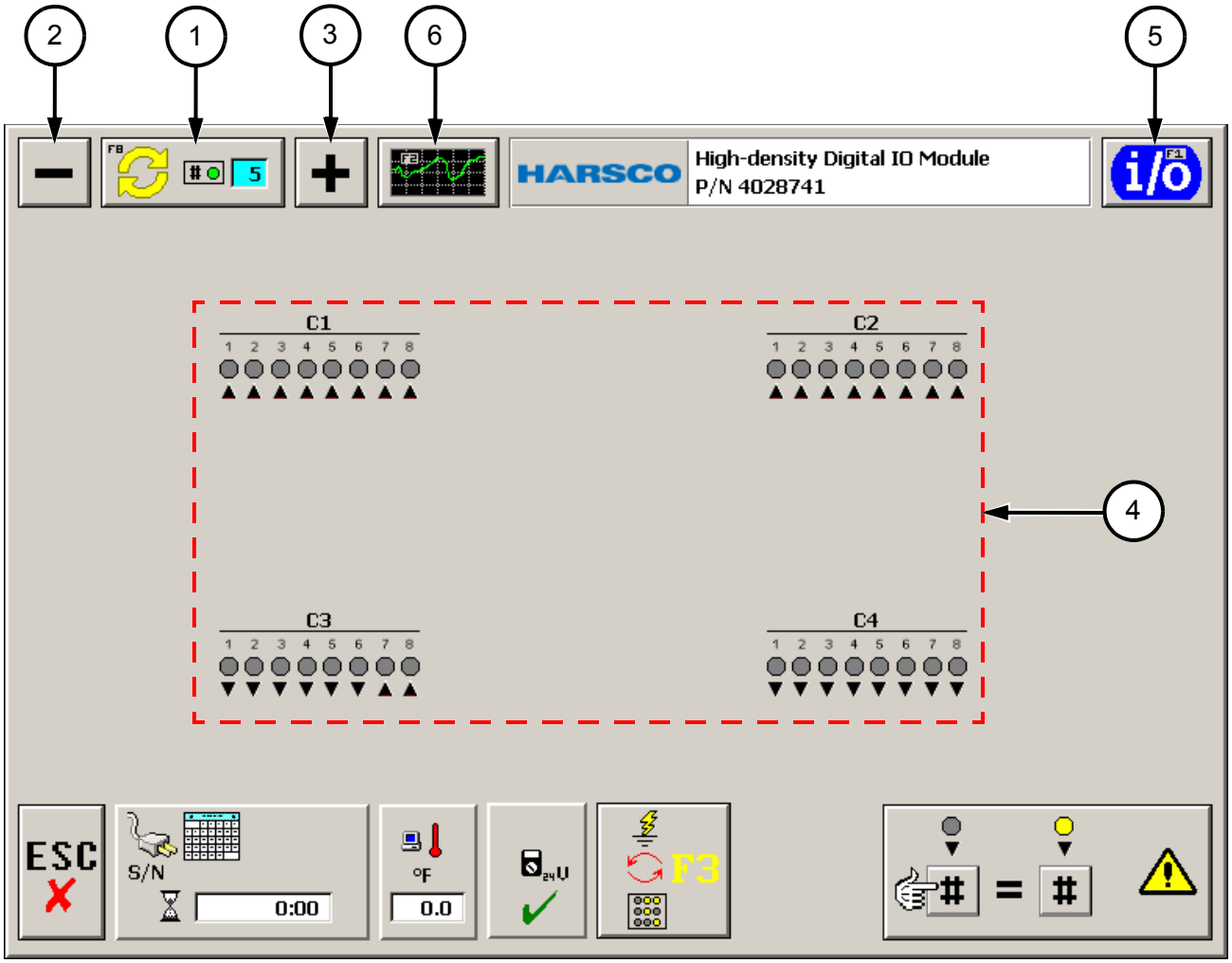

4.1 Jupiter Diagnostic Panels

4.1.7 HD (High Density) Digital Input / Output Module Diagnostic Panel - See Figure 45

(7) Diagnostic Test Button: Press the button to switch between the Module Diagnostic Panel and the Module Diagnostic Test Panel. See 4.1.7.1 HD (High Density) Digital Input / Output Module Diagnostic Test Panel.

(8) Diagnostic Fault Button: Press the button to switch between the Module Diagnostic Panel and the Module Diagnostic Fault Panel. See 4.1.7.2 HD (High Density) Digital Input / Output Module Diagnostic Fault Panel.

(9) 24 Volt Power Box: The box displays the status of the 24 volt power. A gray box with a green " ✓ " symbol indicates the voltage is within acceptable limits. A flashing yellow box with a red " ✗ " symbol indicates the voltage is not within acceptable limits.

(10) Core Temperature Box: The box displays the core temperature of the displayed module.

(11) Module Information Box: The box displays the activation date and the total hours of operation for the displayed module

(12) Escape Button: Press the button to remove this panel from the screen.

4.1 Jupiter Diagnostic Panels

4.1.7 HD (High Density) Digital Input / Output Module Diagnostic Panel

FIGURE 45
HD DIGITAL INPUT / OUTPUT MODULE DIAGNOSTIC PANEL

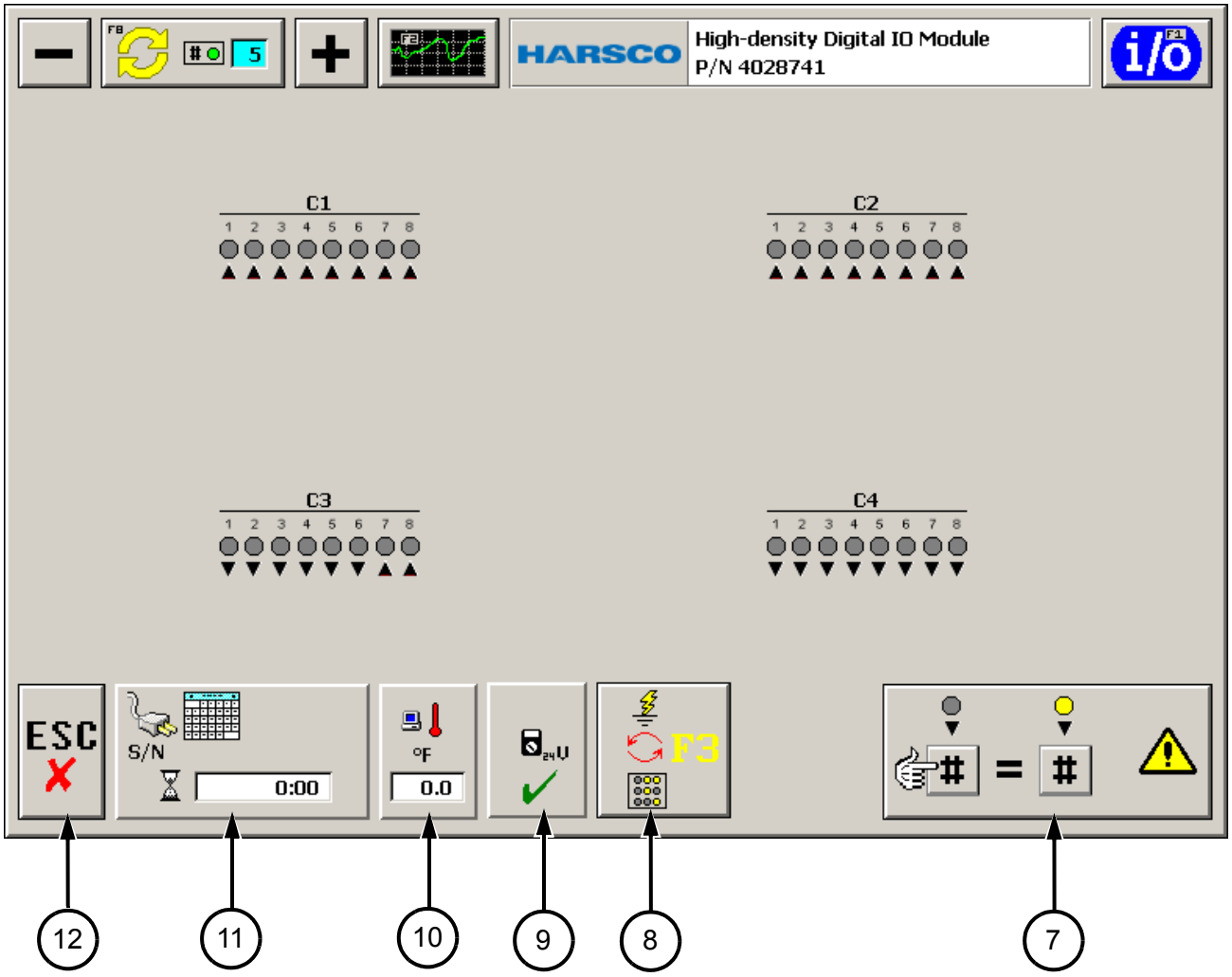

4.1 Jupiter Diagnostic Panels

4.1.7.1 HD (High Density) Digital Input / Output Module Diagnostic Test Panel - See Figure 46

Press the Diagnostic Test Button (7) on the HD (High Density) Digital Input / Output Module Diagnostic Panel to display the Module Diagnostic Test Panel and enable the Diagnostic Test Mode. The button will appear as pressed in. Press the Diagnostic Test Button again to disable the Diagnostic Test Mode and return to the HD (High Density) Digital Input / Output Module Diagnostic Panel. The button will appear as popped out. The panel displays the following:

CAUTION

- **THE MACHINE IS "LIVE" AND COMPONENTS MAY ACTIVATE WHEN IN THE DIAGNOSTIC TEST MODE. ENSURE ALL PERSONNEL ARE CLEAR OF POTENTIAL DANGEROUS AREAS AND THAT ALL APPROPRIATE SAFETY MEASURES ARE TAKEN PRIOR TO USING THE DIAGNOSTIC TEST MODE. FAILURE TO COMPLY COULD RESULT IN BODILY INJURY AND/OR PROPERTY DAMAGE.**

(4) Connectors, Pins and Channel LEDs (C1 - C4): Each connector has eight channels that can be used as a digital input or output channel indicated by the direction of the Channel Arrows below the Channel LEDs. The Channel LEDs display the communication status of the connector's channels. The status of the Channel Arrows and Channel LEDs are as follows:

Input Channel LED Indicator and Arrow:
▲ Gray - Channel Is Off.
Green - Channel Is On.

Output Channel LED Indicator an Arrow:
▼ Gray - Channel Is Off.
Yellow - Channel Is On.
Red - Power Fault.

(13) Channel Test Buttons (1 - 8): Each channel has a Diagnostic Test Button that will energize its output channel. If a channel is not used and/or if it is an input channel, the button (such as C1 - 4) will be a dark gray to indicate that it is not functional. If a channel is an output channel, the button (such as C4 - 5) will be a light gray to indicate that it is functional. To energize an output function, press and hold the button (such as C4 - 8). The button (such as C4 - 8) will appear as pressed in and its output channel LED will highlight yellow. When completed, release the button. The button will appear as popped out again.

4.1 Jupiter Diagnostic Panels

4.1.7.1 HD (High Density) Digital Input / Output Module Diagnostic Test Panel

FIGURE 46
HD DIGITAL INPUT / OUTPUT MODULE DIAGNOSTIC TEST PANEL

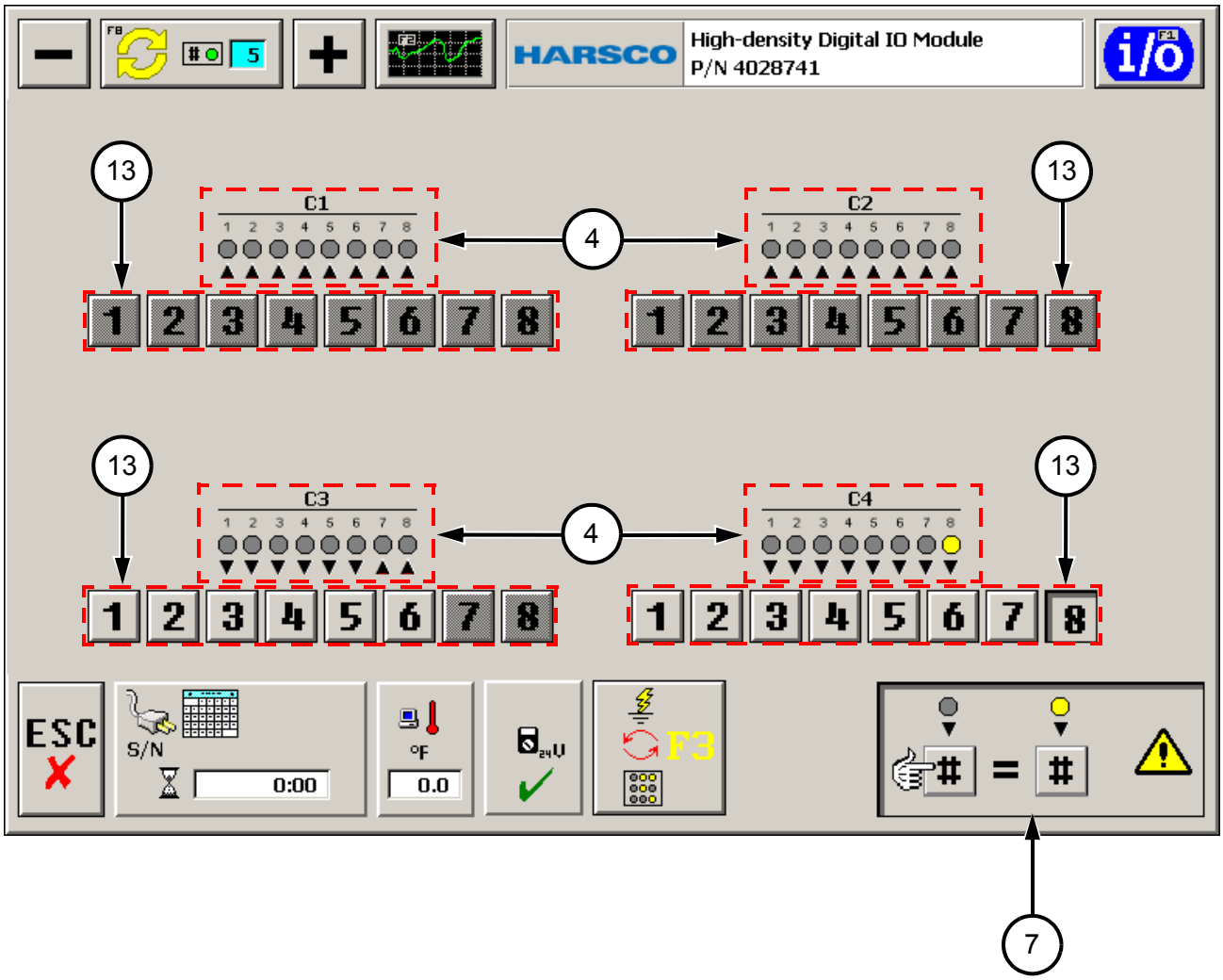

4.1 Jupiter Diagnostic Panels

4.1.7.2 HD (High Density) Digital Input / Output Module Fault Panel - See Figure 47

Press the Diagnostic Fault Button (8) on the HD (High Density) Digital Input / Output Module Diagnostic Panel to display the Module Diagnostic Fault Panel. Press the Diagnostic Fault Button again to return to the Module Diagnostic Panel. The panel displays the following:

(14) Fault Tables (C1 - C4): Each table displays from left to right, the connector number, channel number, ground short circuit counts, open circuit counts, and 24V short circuit counts. A channel that has a short or open circuit will highlight yellow in the column box. When the short or open circuit has been corrected, it will highlight white. The computer must be re-booted to clear the short and/or open circuit counts from the table. If a channel is not used, the table information for that channel will be blank with no information displayed. The status of the short and open circuit column boxes are follows:

- Gray - No Short Circuit On Connector.
- Yellow - Short Circuit On Connector.
- White - Short Circuit On Connector Has Been Corrected.

When a short circuit occurs, the module will immediately turn off the output channel for 2 seconds to protect the wiring and allow it to cool. After this 2 second period expires, the output will be reactivated if the JAM is still commanding the output ON. If the short circuit still exists, this cycle will repeat. In this case, the error counts will appear to clear and count up once every two seconds.

Open circuits are detected whenever an output is activated ON but not when the output is OFF. Some outputs on the machine may not draw sufficient current to accurately detect an open circuit (such as relays). Consult your machine handbook for information on specific channels that do not report open circuits.

A digital output module will latch and report the open circuit error status when it occurs. As long as the JAM is commanding the output ON, this open circuit status may clear and reactivate, and the error counter will increment in the diagnostic table. This condition indicates an intermittent open.

However, if the open circuit status was latched and the JAM turned OFF the output before continuity was restored, the open will continue to be reported on the diagnostic panel. The output must be turned ON again for the open status to be detected again and cleared when continuity is restored.

The “24 volt” short status is detected whenever the JAM is commanding the output OFF. This diagnostic means an outside source is powering the output when it should not be powered. Similar to an open circuit fault, a 24 volt short fault is latched and may clear while the output is OFF, and will persist while the output is ON until it is turned OFF again by the JAM.

The manual diagnostics can be used to manually test a channel having an open or 24 volt short in an attempt to clear a fault from the panel.

4.1 Jupiter Diagnostic Panels

4.1.7.2 HD (High Density) Digital Input / Output Module Fault Panel

FIGURE 47
HD DIGITAL INPUT / OUTPUT MODULE DIAGNOSTIC FAULT PANEL

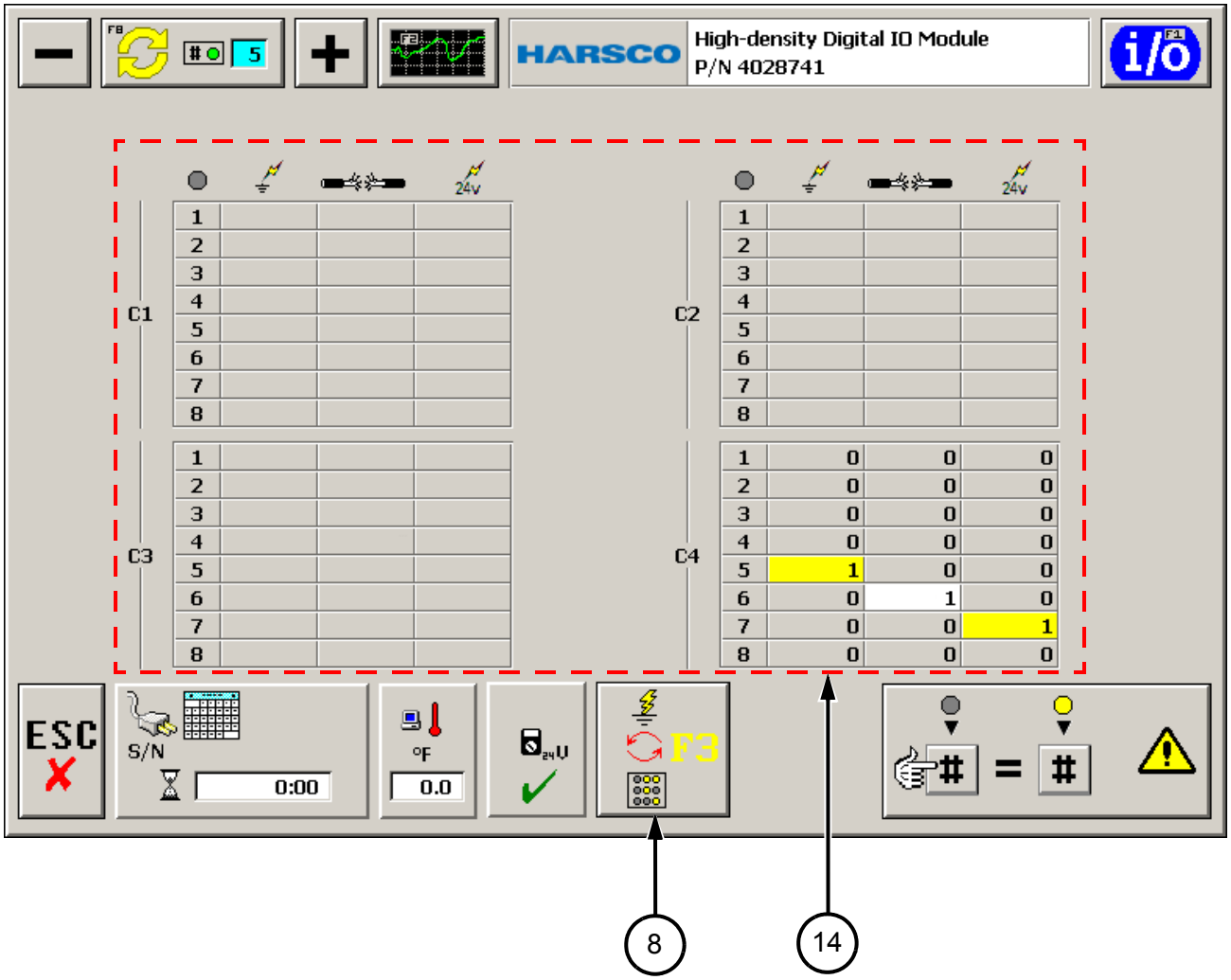

4.1 Jupiter Diagnostic Panels

4.1.7.3 HD (High Density) Digital Input / Output Module Can 2 Diagnostic Panel - See Figure 48

The the HD (High Density) Digital Input / Output Module can communicate with other digital input / output devices, such as an engine ECM through its Can 2 connector. When connected, the Can 2 Diagnostic Panel is displayed in the upper right corner of the panel.

(15) Can 2 Diagnostic Panel: The diagnostic LED indicators show the communication status of the Can 2 link between the host module and the secondary device. The status of the LEDs are as follows:

(A) ERR LED Indicator:
- Gray - Normal operating state exists.
- Red - Bus error condition exists. Module cannot communicate with any target devices. This is often caused by a short circuit between the CAN H and CAN L wires somewhere in the network cabling or plugs. The TXD and RXD LEDs may also show solid red when a bus error condition exists. The WRN LED may blink during bus error conditions, indicating unsuccessful attempts to restart communication.

(B) WRN LED Indicator:
- Gray - Normal operating state exists.
- Red - Bus warning condition exists. Bus warnings often indicate broken or disconnected cables or incorrect wiring of the CAN H and CAN L signals. This condition may also occur briefly when there are intermittent communication errors detected between the module and one or more target devices. Incorrect target device address settings, bad hardware, or cable problems may be the cause.

(C) TXD LED Indicator:
- Green - Module has successfully transmitted at least one message to a target device.
- Red - Module transmissions were previously OK but presently faulty. A fault may occur when either the ERR or WRN LEDs are red or when a device on the Can 2 network cannot be contacted.
- Gray - Module has not yet transmitted a message.

(D) RXD LED Indicator:
- Green - Module is receiving messages from connected devices.
- Red - Module was receiving messages OK but presently faulty. A fault condition may arise when either the ERR or WRN LEDs are red or when the driver software on the module is receiving incorrect messages from devices on the Can 2 network.
- Gray - Module has not received a message yet.

4.1 Jupiter Diagnostic Panels

4.1.7.3 HD (High Density) Digital Input / Output Module Can 2 Diagnostic Panel - See Figure 48

(E) ONL LED Indicator:
- Green - Module has established its online presence on the Can 2 network.
- Red - Module was previously online and is reconnecting.
- Gray - Module has not yet gone online.

The pins in the Can 2 plug are assigned as follows:
Pin 1 - field power common.
Pin 2 - 24V field power.
Pin 3 - CAN ground.
Pin 4 - CAN H signal.
Pin 5 - CAN L signal.

FIGURE 48
HD DIGITAL INPUT / OUTPUT MODULE CAN 2 DIAGNOSTIC PANEL

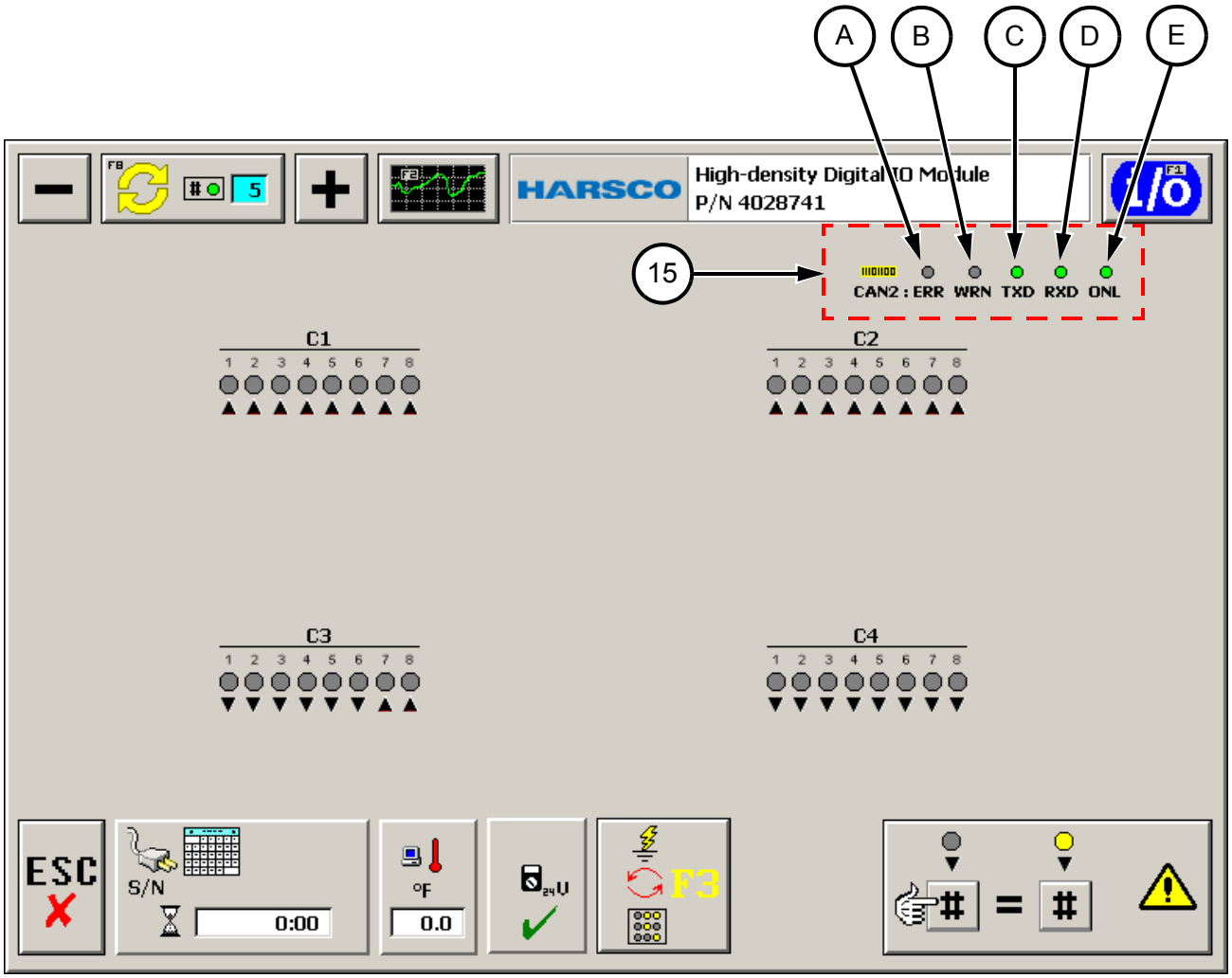

4.1 Jupiter Diagnostic Panels

4.1.8 Digital to Analog Output Module Diagnostic Panel - See Figure 49

Some machines may be equipped with a Digital to Analog Output Module. The Digital to Analog Output Module is used to drive servo valves and other devices that require a precision voltage or current input for control. These devices may be driven in "open loop" fashion, where the JAM specifies the exact output to drive, or in "closed loop" fashion, where the Digital to Analog Output Module itself is provided with feedback information used to evaluate the amount of error in its output signal relative to an output set point nominated by the JAM. Each plug on the D2A module may be driven in open or closed loop fashion depending upon the application needs of the machine.

The Digital to Analog Output Module is designed to drive four independent output channels between -10 and +10 volts and -100 mA and +100 mA simultaneously on independent connector pins. Typically, the voltage output pin or current output pin is connected to the device being driven, but not both at the same time. In all cases, the current output is directly proportional to the output voltage (e.g. 100 mA = 10 v and -100 mA = -10 v).

4.1.8.1 Open Loop Mode Only

(1) Zoom Button: Press the Zoom Button or F8 key to switch between the Network View, Thumbnail View or Detailed Module Diagnostic Panels. This button displays the selected Network Module # (highlighted cyan) and the status of its Diagnostic LED.

(2) Minus (-) Button: Press the Minus (-) Button to select the previous module in the network.

(3) Plus (+) Button: Press the Plus (+) Button to select the next module in the network.

(4) Connectors and Pin Identification (C1 - C4): A description of the connector pin layout is located above the connectors, along the right side of the panel. Each analog output plug supports the voltage output on pin 3 and its ground connection on pin 4. The 100 mA current output connection is on pin 1 and its return connection is on pin 2. A voltmeter can be used to measure the voltage between pin 3 and pin 4 to determine the amount of current driven to a load connected on pin 1 (e.g. 5 volts measured = 50 mA output on pin 1).

(5) C1 - C4 Table: The Digital to Analog Output Module Diagnostic Panel displayed in Figure 49 illustrates a machine configuration where all four output channels are driven in open loop fashion by the JAM and there is no analog input module connected on CAN2 for feedback. The sliders on the right are disabled when there is no feedback module connected on the CAN2 connector.

In this configuration, the active sliders on the left indicate the actual voltage driven on each plug (C1 - C4), which is directly proportional to the milliamps driven on each plug. In open loop mode, the JAM is specifying the desired output voltage, even if the milliamps output pin is actually driving the load. A left slider is disabled if the corresponding plug is not used on the machine.

(6) I/O Information Button: Press the button or F1 key to display an I/O Information Panel on the currently selected module (highlighted cyan) listing the connectors and input / output descriptions. See I/O Information Panel.

4.1 Jupiter Diagnostic Panels

4.1.8 Digital to Analog Output Module Diagnostic Panel - See Figure 49

4.1.8.1 Open Loop Mode Only

(7) I/O Graphing Button: Press the button or F2 key to display an I/O Graphing Panel on the currently selected module (highlighted cyan) to monitor the properties of up to four different channels. See I/O Graphing Panel.

(8) 24 Volt Power Box: The box displays the status of the 24 volt power. A gray box with a green " ✓ " symbol indicates the voltage is within acceptable limits. A flashing yellow box with a red " ✗ " symbol indicates the voltage is not within acceptable limits.

(9) Core Temperature Box: The box displays the core temperature of the displayed module.

(10) Module Information Box: The box displays the activation date and the total hours of operation for the displayed module

(11) Escape Button: Press the button to remove this panel from the screen.

FIGURE 49
DIGITAL TO ANALOG OUTPUT MODULE DIAGNOSTIC PANEL

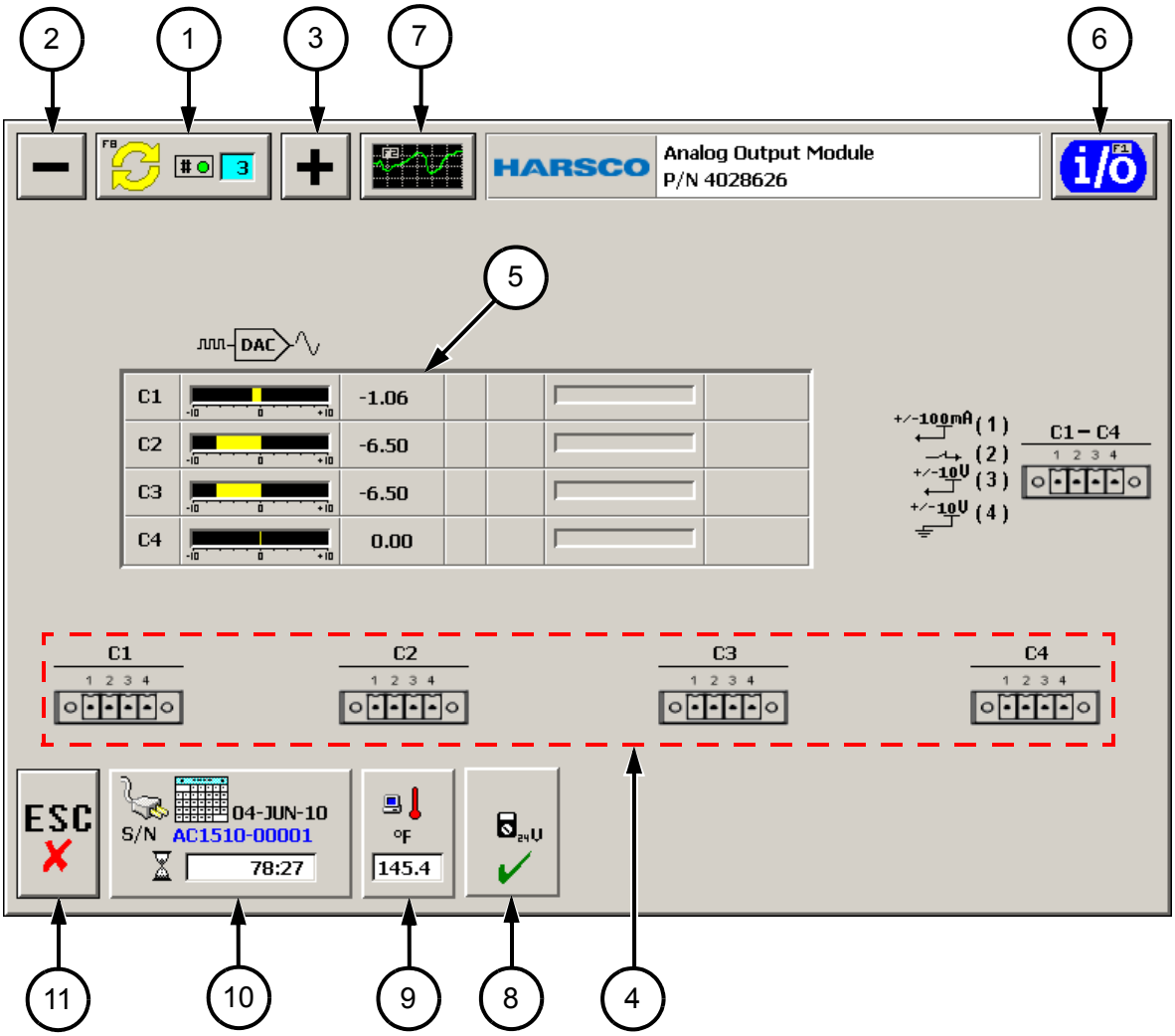

4.1 Jupiter Diagnostic Panels

4.1.8 Digital to Analog Output Module Diagnostic Panel - See Figure 50

4.1.8.2 Open Loop Mode And / Or Closed Loop Mode

1. An analog input module can be connected to the Digital to Analog Output Module via a direct link over the CAN 2 connector. The analog input module provides feedback information on this link that the Digital to Analog Output Module continuously uses to determine how to directly change its output signal.

2. Figure 50 illustrates a machine configuration where an analog input module is connected on CAN2 to provide feedback for channels running in closed loop mode. In this case, C1 and C3 are presently driving a load in open loop mode and C2 and C4 are driving a load in closed loop mode. Depending on the machine software design, the JAM may optionally switch a channel into and out of closed loop mode at any time during the operation of the machine. Typically closed loop mode is entered when a machine work cycle is initiated.

3. On the C1 - C4 Sliders Table (5), the Digital to Analog output driven is displayed on the left and its corresponding Analog to Digital feedback channel status is displayed in the adjacent fields on the right. The arrow drawn in the center of each row is illuminated green when a Digital to Analog channel is using its corresponding Analog to Digital feedback channel in closed loop mode. A red " ✘ " symbol will be displayed over the arrow in the table for any channel that the JAM is commanding to use closed loop mode but one or all of the following conditions exist:

   a. The 24 volt field power to the module has been interrupted.
   b. The Digital to Analog module is not communicating at all with the JAM.
   c. The JAM is remote and not communicating with the local JAM over the Ethernet.
   d. There are CAN2 errors on the communication link between the Digital to Analog module and the Analog to Digital feedback module.
   e. The 24 volt field power to the Analog to Digital feedback module has been interrupted.
   f. The Digital to Analog module has detected errors in control parameters sent by the JAM.

4. The pointer (12) above each feedback channel slider indicates the JAM's desired set point relative to the feedback channel. The pointer is highlighted green when the channel is operating in closed loop mode.

5. The module icon (13) above the table indicates the module number of the analog input module providing the feedback via the CAN2 connection. Pressing this icon or the F3 key will display the module and its diagnostic status.

6. The Analog to Digital channel number used for feedback is displayed to the left of each feedback slider. This channel number may be changed by the JAM during machine operation. In some instances, a channel number "S1" through "S8" will indicate a value displayed that is a summation of values computed by the module, perhaps using several of the channel values provided by the Analog to Digital feedback module.

4.1 Jupiter Diagnostic Panels

4.1.8 Digital to Analog Output Module Diagnostic Panel - See Figure 50

4.1.8.2 Open Loop Mode And / Or Closed Loop Mode

7. In the diagnostic screen example below, the Digital to Analog channel C2 has a set point of around -7 volts and is getting feedback from Analog to Digital channel C1, which is presently reading -0.24 volts. In the example, Digital to Analog channel C2 has not yet driven its output so that the feedback has reached the set point, while Digital to Analog channel C4 has already driven its output so that the desired set point is maintained.

8. The closed loop control software inside the Digital to Analog module evaluates the difference in the set point and the actual feedback values to determine the error in its output signal and continuously adjusts the Digital to Analog output so that the set point and the feedback values are identical. The Digital to Analog output values required are determined by the mechanical system in which the load is operating.

FIGURE 50
DIGITAL TO ANALOG OUTPUT MODULE DIAGNOSTIC PANEL

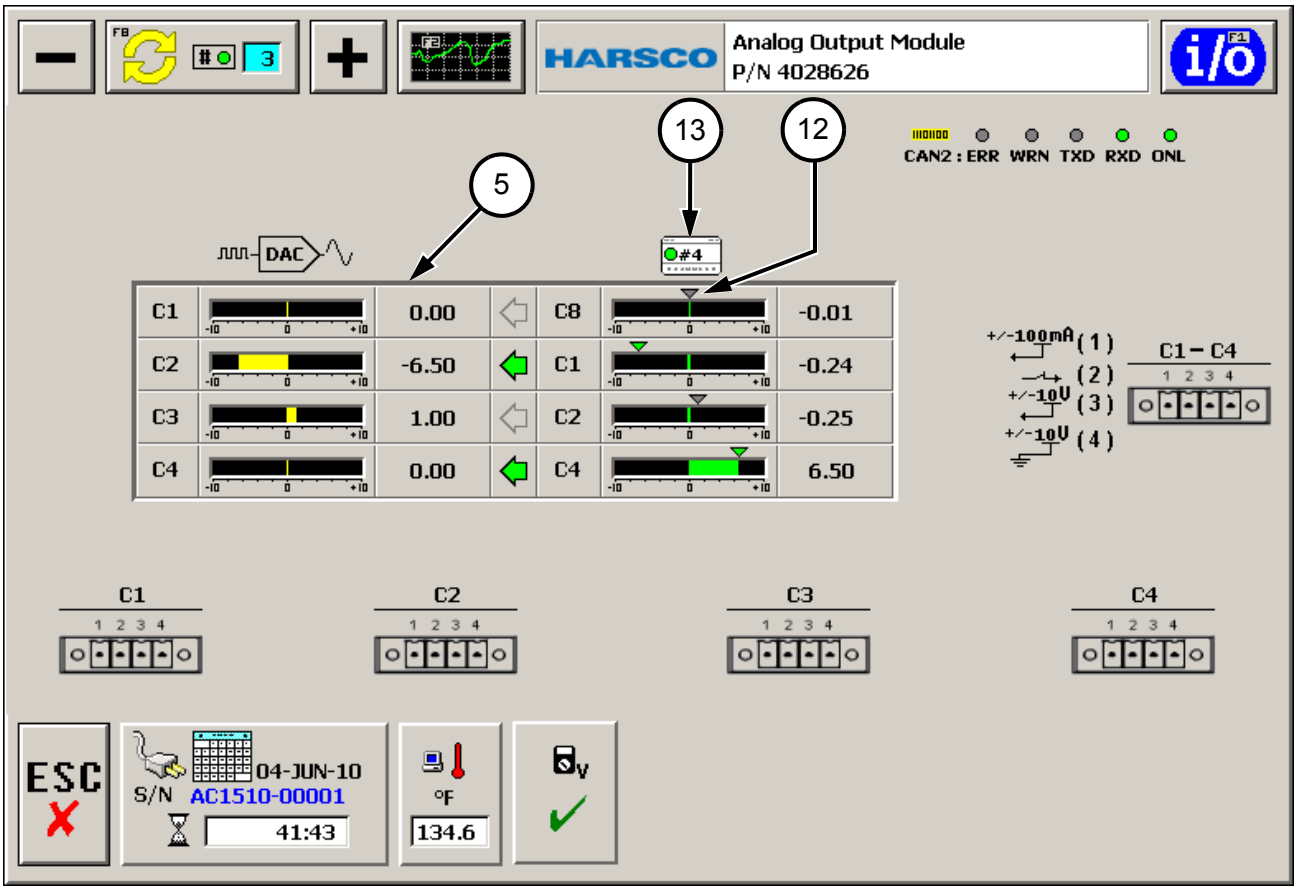

4.1 Jupiter Diagnostic Panels

4.1.8 Digital to Analog Output Module Diagnostic Panel - See Figure 51

4.1.8.2 Open Loop Mode And / Or Closed Loop Mode

Any module using its CAN2 port to connect to another device will display a CAN2 status indicator in the upper right of its diagnostic panel. Thus, this indicator is displayed when an Analog to Digital module is configured on a machine to feedback to a Digital to Analog module, and the CAN2 diagnostic indicator is shown at the top right of both modules' diagnostics panel. The Digital to Analog module only receives data on CAN2, so only its RXD indicator is green when it is receiving feedback OK. The Analog to Digital feedback module only transmits channel data, so only its TXD indicator is green when it is transmitting feedback properly.

(14) Can 2 Diagnostic Panel: The diagnostic LED indicators show the communication status of the Can 2 link between the host module and the secondary device. The status of the LEDs are as follows:

(A) ERR LED Indicator:
- Gray - Normal operating state exists.
- Red - Bus error condition exists. Module cannot communicate with any target devices. This is often caused by a short circuit between the CAN H and CAN L wires somewhere in the network cabling or plugs. The TXD and RXD LEDs may also show solid red when a bus error condition exists. The WRN LED may blink during bus error conditions, indicating unsuccessful attempts to restart communication.

(B) WRN LED Indicator:
- Gray - Normal operating state exists.
- Red - Bus warning condition exists. Bus warnings often indicate broken or disconnected cables or incorrect wiring of the CAN H and CAN L signals. This condition may also occur briefly when there are intermittent communication errors detected between the module and one or more target devices. Incorrect target device address settings, bad hardware, or cable problems may be the cause.

(C) TXD LED Indicator:
- Green - Module has successfully transmitted at least one message to a target device.
- Red - Module transmissions were previously OK but presently faulty. A fault may occur when either the ERR or WRN LEDs are red or when a device on the Can 2 network cannot be contacted.
- Gray - Module has not yet transmitted a message.

(D) RXD LED Indicator:
- Green - Module is receiving messages from connected devices.
- Red - Module was receiving messages OK but presently faulty. A fault condition may arise when either the ERR or WRN LEDs are red or when the driver software on the module is receiving incorrect messages from devices on the Can 2 network.
- Gray - Module has not received a message yet.

4.1 Jupiter Diagnostic Panels

4.1.8 Digital to Analog Output Module Diagnostic Panel - See Figure 51

4.1.8.2 Open Loop Mode And / Or Closed Loop Mode

(E) ONL LED Indicator:
- Green - Module has established its online presence on the Can 2 network.
- Red - Module was previously online and is reconnecting.
- Gray - Module has not yet gone online.

The pins in the Can 2 plug are assigned as follows:
Pin 1 - field power common.
Pin 2 - 24V field power.
Pin 3 - CAN ground.
Pin 4 - CAN H signal.
Pin 5 - CAN L signal.

FIGURE 51
DIGITAL TO ANALOG OUTPUT MODULE DIAGNOSTIC PANEL

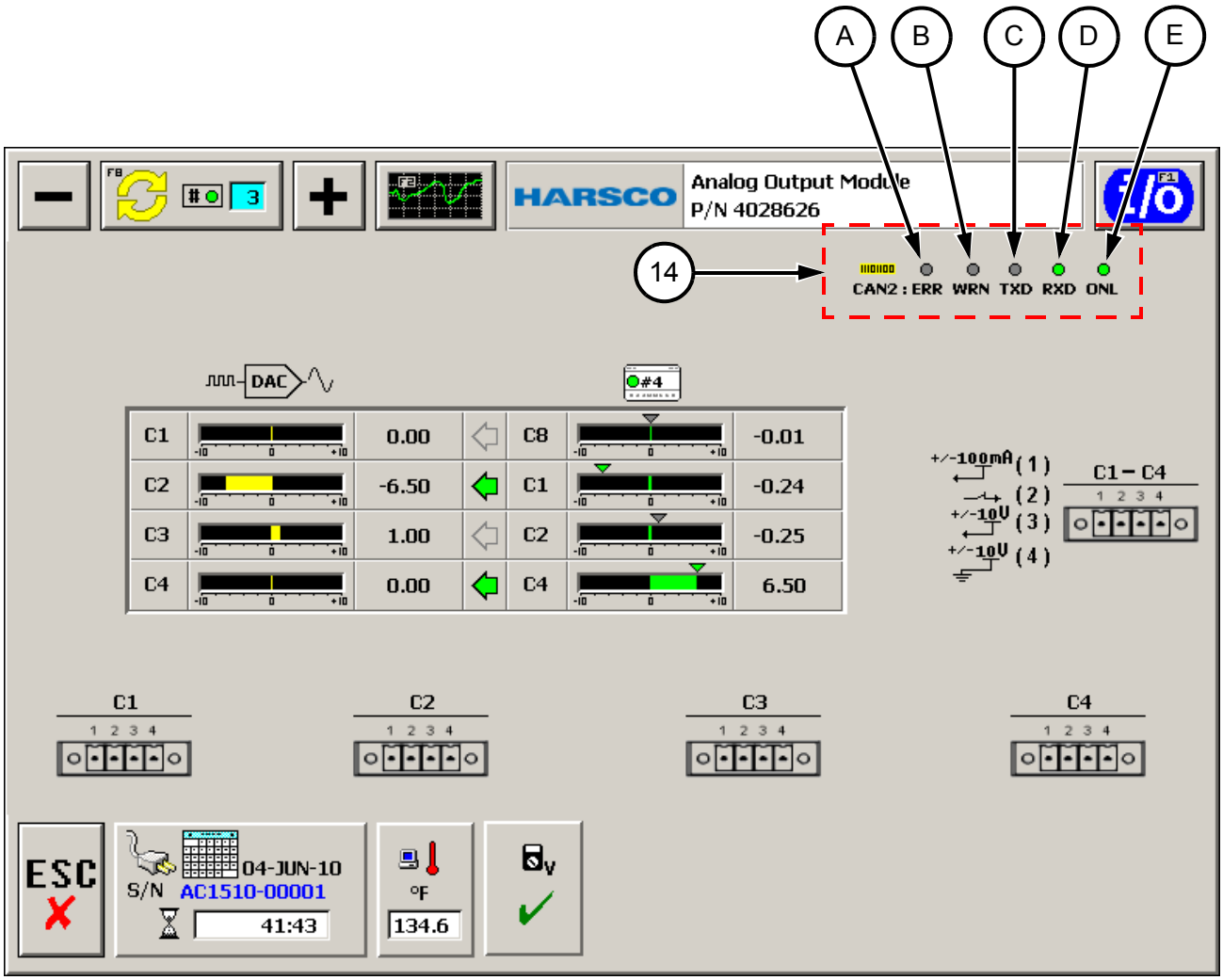

4.1 Jupiter Diagnostic Panels

4.1.9 I/O Information Panel - See Figure 52

Pressing the Input / Output (I/O) Information Button (1) on any of the Jupiter Diagnostic Panels will bring up the Input / Output (I/O) Information Panel. The Input / Output (I/O) Panel displays the following:

(2) The Car Number (if applicable), CAN Number and type of Module.

(3) The connector numbers and a description of the corresponding component that is associated with each connector.

(4) Use the Page Up or Page Down Buttons (4) to view I/O additional information for this module and other modules in the network.

(5) Press the Globe Button or F5 key to change the displayed language.

(6) Press the Escape Button to remove this panel from the screen.

4.1 Jupiter Diagnostic Panels

4.1.9 I/O Information Panel

FIGURE 52
I/O INFORMATION PANEL

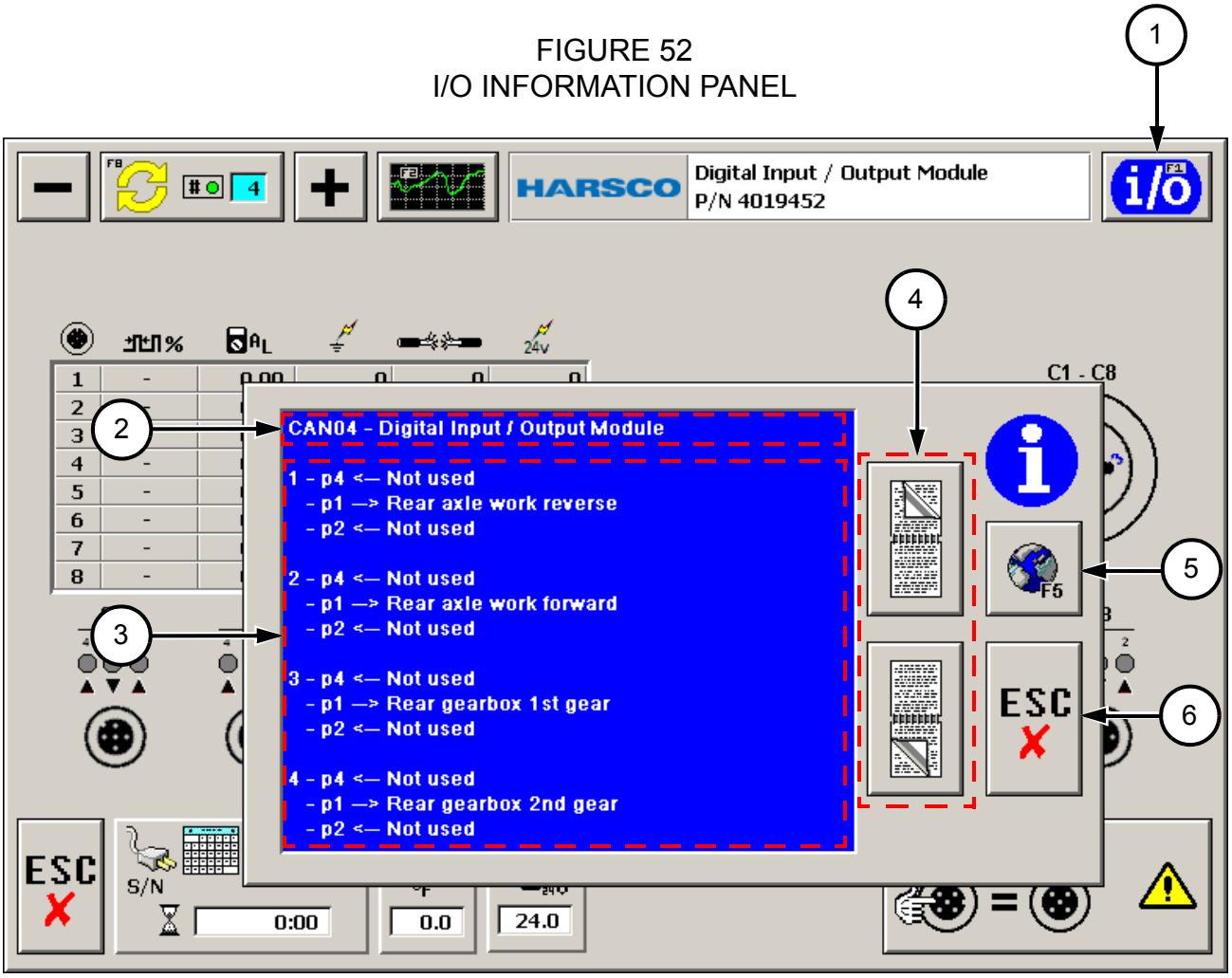

4.1 Jupiter Diagnostic Panels

4.1.10 I/O Graphing Panel - See Figure 53

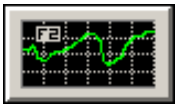

Press the I/O Graphing Button on any of the Jupiter Diagnostics Panels or the F2 key to display the I/O Graphing Panel on the screen. This panel may also be accessed from the Jupiter diagnostic drop-down panel. This panel is used to monitor the properties of up to four different channels on the network. The panel displays the following:

(1) Channel Button: The first line on the upper section of the Channel Button displays the Car Number (if applicable), CAN number, Connector number and Pin number. The second line on the upper section of the button displays the type of input / output that is being monitored.

The lower section of each Channel Button displays the circuit description and the actual value of the channel that is being monitored.

(2) I/O Graphs: The I/O Graphs display the actual value of the selected channel over a period of time by the use of a green line on the graph.

To monitor a different channel, touch any of the four Channel Buttons (1) to display the Channel Selection Panel.

Note: Only the four channels that are selected to be monitored record their data. When a new channel is selected to be monitored, the new channel data is displayed, starting at the time the new channel was selected. The previous channel data that was being recorded is replaced with the new channel data.

To adjust the amplitude setting or time line displayed on the I/O Graphs (2), touch on any of the four I/O Graphs (2) to display the I/O Graph Adjust Panel.

(3) The pointers (3) along the right side of the graphs indicate the present value of the selected channel.

(4) Some Jupiter applications may include an Information Button for this panel. Press the Information Button (4) for the description of this panel.

(5) Press on the Escape Button (5) to remove this panel from the screen.

4.1 Jupiter Diagnostic Panels

4.1.10 I/O Graphing Panel

FIGURE 53
JUPITER INPUT / OUTPUT GRAPHING PANEL

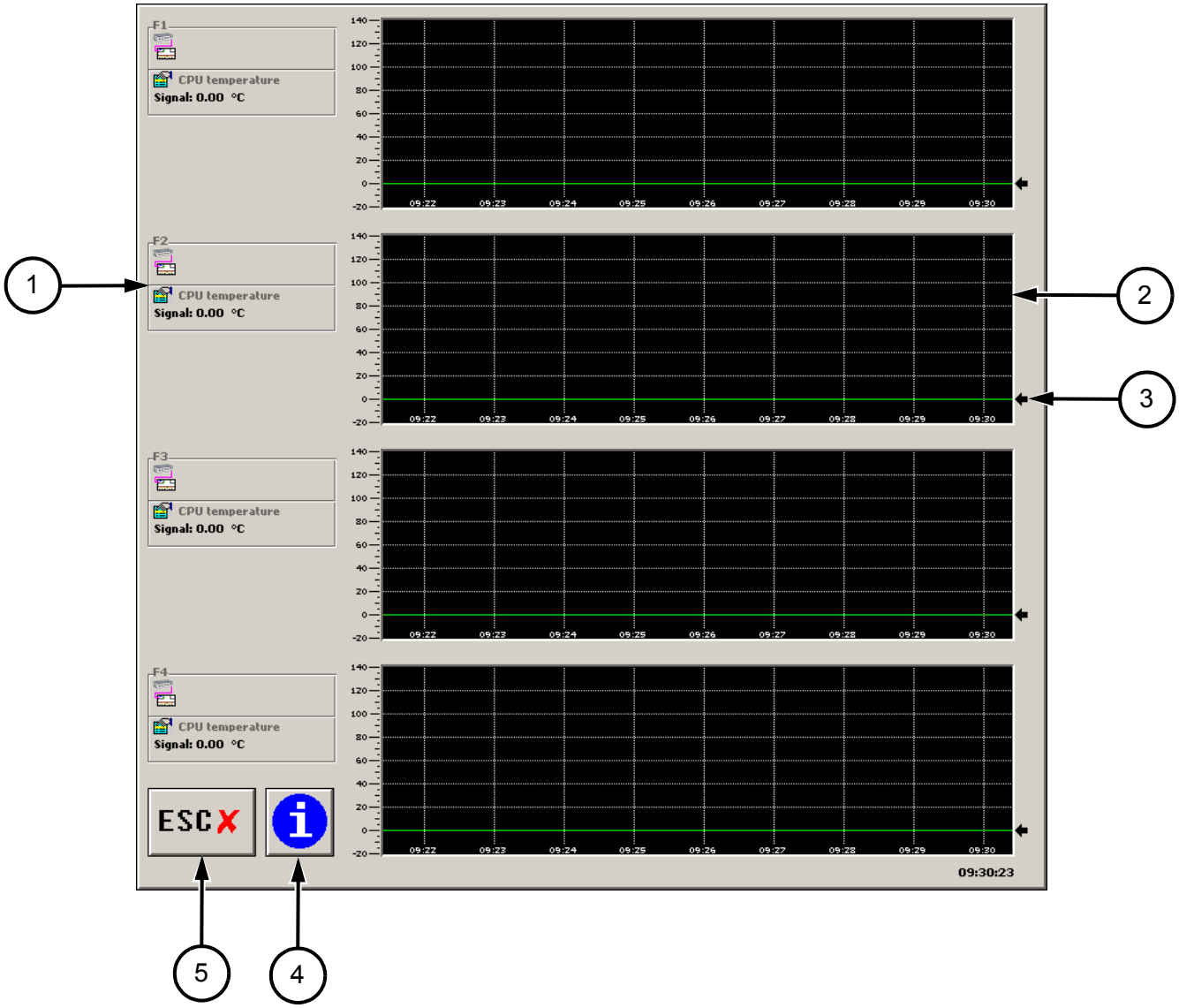

4.1 Jupiter Diagnostic Panels

4.1.10 I/O Graphing Panel - See Figure 54

Touch anywhere on any of the four I/O Graphs to display the I/O Graph Adjust Panel. This panel is used to change and adjust the display of the graph. If a touchscreen or mouse are not being used, a PC keyboard or keypad buttons can be used to access the Graph Adjust Panels as well. Press and hold the function key (F1 to F4) for the desired channel's properties and then press the "zoom" key (F8 on the PC keyboard). You can also press and hold the zoom/F8 key first and then press the desired function key. This panel functions as follows:

Note: The I/O Graph Adjust Panel will automatically close after a few seconds if an action is not taken on the panel.

1. Use the Shift Zero Down (1) or Up (2) Buttons to move the 0 line displayed on the I/O Graph up or down. With a PC keyboard or keypads, the Page Down button shifts the 0 line down and the Page Up button shifts the 0 line up.

2. Use the Amplitude Decrease (3) or Increase (4) Buttons to adjust the amplitude setting displayed on the I/O Graph. With a PC keyboard or keypad, the Left Arrow (cursor) key decreases the amplitude, and the Right Arrow (cursor) key increases the amplitude.

3. Use the Time Decrease (5) or Increase (6) Buttons to adjust the time line displayed on the I/O Graph. The time line is adjustable from approximately 4 minutes to 3 hours. With a PC keyboard or keypad, the Minus "-" key increases the time period displayed and the Plus "+" key decreases the time period displayed.

4. The Property Selection Table (7) displays the available connector properties associated with this specific channel and connector type. The connector properties that is currently selected and being monitored is highlighted yellow.

5. Touch the Property Selection Table (7) in the vicinity of the desired connector property that is to be monitored. Then use the Line Up or Down Buttons (8) to select and highlight yellow the desired connector property that is to be monitored. With a PC keyboard or keypads, the Up and Down arrow (cursor) keys are used to select the desired property from the table.

6. Press the Accept Button (10) or the Enter key to save any changes and remove this panel from the screen.

4.1 Jupiter Diagnostic Panels

4.1.10 I/O Graphing Panel

FIGURE 5-54
JUPITER INPUT / OUTPUT GRAPH ADJUST PANEL

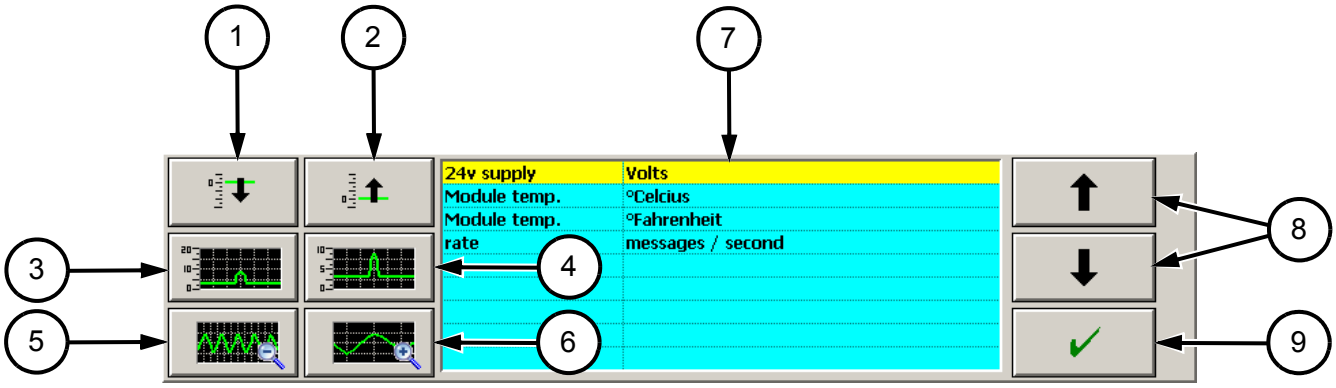

4.1 Jupiter Diagnostic Panels

4.1.10 I/O Graphing Panel - See Figure 55

Touch any of the four Channel Buttons on the I/O Graphing Panel or the corresponding F1, F2, F3 or F4 keys to display the Channel Selection Panel. The Channel Selection Panel is used to select a different Channel (JAM Box, CAN Module, Connector and Pin) to monitor on the network. This panel functions as follows:

(1) The Channel Selection Table displays the JAM Box Name (if applicable), CAN Number, Connector Number, Pin Number, Circuit Function and Connected Device Description. The channel that is selected and being monitored is highlighted yellow.

(2) Use the Page Up or Down Buttons (2) to page the Selection Table up or down until the desired Channel is displayed.

(3) Touch the monitor screen near of the desired Channel to monitor. Then use the Line Up or Down Buttons (3) to select the channel. The selected channel will be highlighted yellow.

(4) Press the Accept Button (4) to save any changes and close the panel.

(5) Press the Escape Button (5) to discard any changes and close the panel.

If a different Channel was selected, the newly selected Channel will be displayed and monitored on the I/O Graph on the I/O Graphing Panel.

4.1 Jupiter Diagnostic Panels

4.1.10 I/O Graphing Panel

FIGURE 5-55
CHANNEL SELECTION PANEL

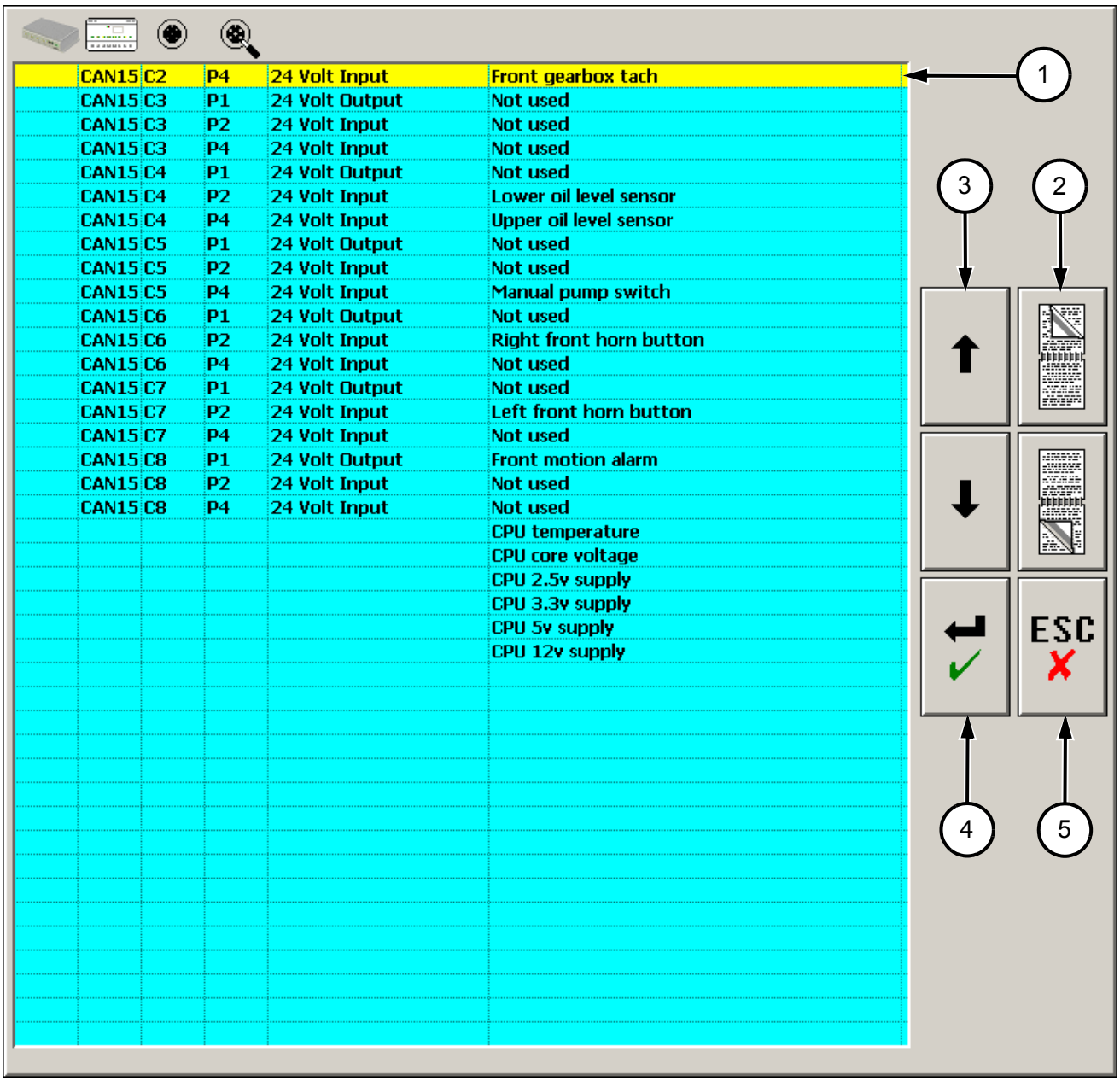

NOTES

Limited Warranty

Harsco Rail warrants products of its manufacture to be free of defects in material and workmanship, under normal use and service for a period of six (6) months from date of delivery to the original user. The obligation of Harsco Rail under this warranty is limited to repairing or replacing at its factories, or other location designated by it, any part or parts thereof which are returned within 30 days of the date when failure occurs or defect is noted, with transportation charges prepaid, and which upon examination appears to the satisfaction of Harsco Rail to have been defective. Such free repair or replacement does not include transportation charges, or the cost of installing the new part or any other expense incident thereto. Harsco Rail will not be liable for other loss, damage, or expense directly or indirectly arising from the use of its product, nor will Harsco Rail be liable for special, incidental, or consequential damages.

Ordinary wear and tear, and damage from abuse, misuse, neglect or alteration are not covered by this warranty. Harsco Rail assumes no liability for expense incurred or repairs made outside its factories except by written consent. This warranty is null and void if instructions and operating procedures are not followed.

Equipment and parts not manufactured by Harsco Rail, but which are furnished in connection with Harsco Rail products, are covered directly by the warranty of the manufacturer supplying them. However, Harsco Rail will assist in obtaining adjustment on such equipment or parts when necessary.

THIS WARRANTY IS IN LIEU OF ALL OTHER WARRANTIES EXPRESSED OR IMPLIED INCLUDING ANY IMPLIED WARRANTIES OF MERCHANTABILITY OR FITNESS FOR A PARTICULAR PURPOSE, WHICH ARE HEREBY DISCLAIMED AND OF ANY OTHER OBLIGATION OR LIABILITY OF HARSCO RAIL. THE REMEDY SET FORTH ABOVE IS BUYER'S EXCLUSIVE REMEDY FOR A BREACH OF THE WARRANTY. UNDER NO CIRCUMSTANCES WILL HARSCO RAIL BE RESPONSIBLE FOR INCIDENTAL, CONSEQUENTIAL, SPECIAL OR OTHER INDIRECT DAMAGES.

Indemnity

Buyer agrees to indemnify and hold Harsco Rail harmless for all loss, cost including but not limited to legal and other cost of proceedings, and damages suffered by Buyer or claimed by third parties by or related to Buyer's use of Harsco Rail's products.

Product Improvement Liability Disclaimer

Harsco Rail reserves the right to make any changes in or improvements to its products without incurring any liability or obligation whatsoever and without being required to make any corresponding changes or improvements to products previously manufactured or sold.

Hazardous Material Disclaimer

The parts/assemblies that are used in this Product are classified as "articles" according to 29 CFR 1910.1200 (C). They are formed to a specific shape or design during manufacture, have end use function dependent upon their shape or design, and do not release any hazardous chemical under normal conditions of use. Accordingly, we are not required to supply Material Safety Data Sheets (MSDS) or to label shipping containers for "articles". However, lubricants, liquids, gaseous chemicals and solids used in operation or maintenance of the product may require that user's take occupational protective measures. MSDS sheets for such materials will be supplied to your Purchasing Manager/ Safety Director to be used in your employee safety training education and environmental health training.

HARSCO RAIL

© 2010 HARSCO RAIL, HARSCO CORPORATION

BULLETIN 1606 ISSUED 8 - 2010

APPENDIX B
SERVICE BULLETINS

TABLE OF CONTENTS
APPENDIX B

SERVICE BULLETINS

SB 06-005 – Pusher Bar Lock Pin Procedure

SB 09-011 – Service / Parking Brake Application

HTT

Harsco Track Technologies

Harsco

www.harscotrack.com

SERVICE BULLETIN
MAINTENANCE OF WAY EQUIPMENT

DATE: 5-9-2006 **BULLETIN NO:** 06-005

TITLE: PUSHER BAR LOCK PIN PROCEDURE

RATING:

- [ ] **DIRECTIVE** (Action Is Required)
- [ ] **ALERT** (Potential Problem)
- [ ] **INFORMATION** (Action Is Optional)
- [x] **PRODUCT IMPROVEMENT** (Enhance Product)

PRODUCT SERIES / MODEL: MARK IV Tampers

SERIAL NO: All Models

SUMMARY: Recently there have been some questions concerning the proper sequence for using the lock pins that secure the folding pusher bars in the projector buggy lift frame. The purpose of this Service Bulletin is to clarify the Pusher Bar Lock Pin Procedure.

OPERATIONAL IMPACT: The Pusher Bar Lock Pin Procedure in this Service Bulletin provides a detailed method for the correct insertion and retraction of the folding pusher bar lock pins.

ACTION: Follow the Pusher Bar Lock Pin Procedure in this Service Bulletin when deploying and storing the folding pusher bars and projector buggy. In addition, HTT is now offering the following two kits to upgrade older MARK IV's:

1. Air Operated Lock Pin Kit - HTT part #4011577. This kit adds the remote air operated lock pins and air valves to the existing projector buggy lift frame.
2. Pusher Bar Handle Kit - HTT part #4011487. This kit provides bolt-on pusher bar grip handles to assist in deploying and storing the pusher bars.

CONTACT: If you have any questions or if we can be of any service, please contact the Service Department at the Columbia, SC. facility, 803-822-9160.

SAFETY INFORMATION

WARNING

FOLLOW ALL SAFETY INSTRUCTIONS PER THE MARK IV OPERATION AND MAINTENANCE MANUAL BEFORE DEPLOYING PUSHER BARS. FAILURE TO COMPLY COULD RESULT IN SEVERE BODILY INJURY.

PUSHER BAR LOCK PIN PROCEDURE

The Pusher Bar Lock Pin Procedure in this Service Bulletin refers to the remote air operated lock pin design. The pins are retracted or inserted by pulling or pushing respectively on the corresponding air valve knob. The procedure for the manual lock pin design is the same except that the pins must be inserted and retracted by hand.

The correct lock pin configuration (with the folding pusher bars and projector buggy stored for track travel) is as follows: pins 1, 4 & 5 inserted, pins 2 & 3 retracted, and the cable operated spring loaded buggy lock engaged (see Figure 1).

DEPLOYING PUSHER BARS

1. Retract lock pin 5. Slowly push the projector buggy away from the machine to unfold the recorder buggy (short buggy) until it is fully extended (see Figure 2).

2. Retract lock pin 4. Slowly begin to unfold pusher bar 1. Once it has moved slightly away from pusher bar 2, insert lock pin 3 to secure pusher bar 2. Continue to unfold pusher bar 1 until it is fully extended (see Figure 3).

3. Retract lock pin 3. Slowly unfold pusher bar 2 until it is fully extended.

4. Before unfolding pusher bar 3, verify that the cable operated spring loaded buggy lock is properly engaged (see Figure 4). Retract lock pin 1 and slowly begin to unfold pusher bar 3. As it moves forward slightly, pull the cable ring to release the spring loaded buggy lock. Continue to unfold pusher bar 3 until it is fully extended.

FIGURE 1
LOCK PIN CONFIGURATION WITH FOLDING PUSHER BARS
AND PROJECTOR BUGGY STORED FOR TRACK TRAVEL

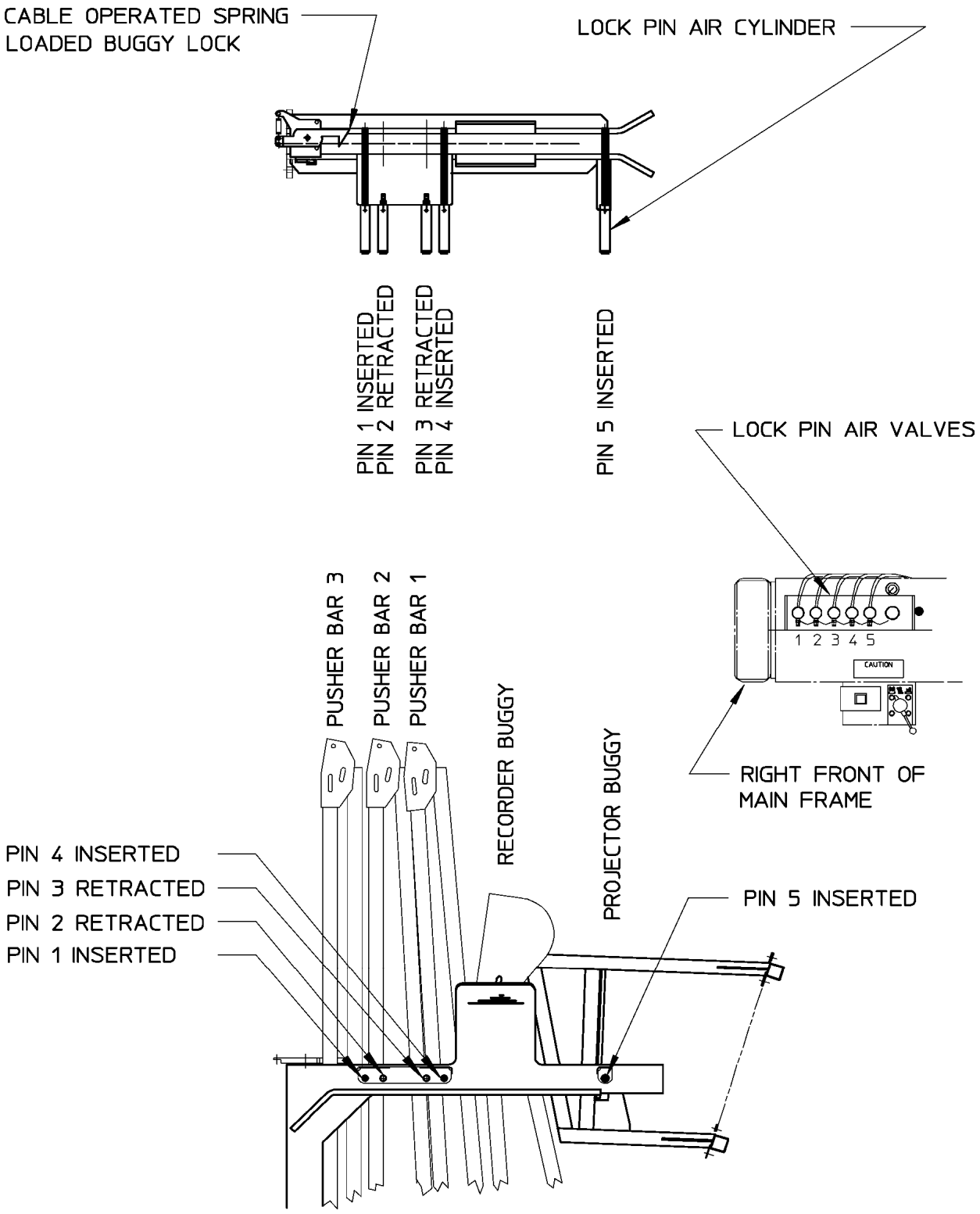

FIGURE 2
LOCK PIN CONFIGURATION WITH PROJECTOR BUGGY
AND RECORDER BUGGY DEPLOYED

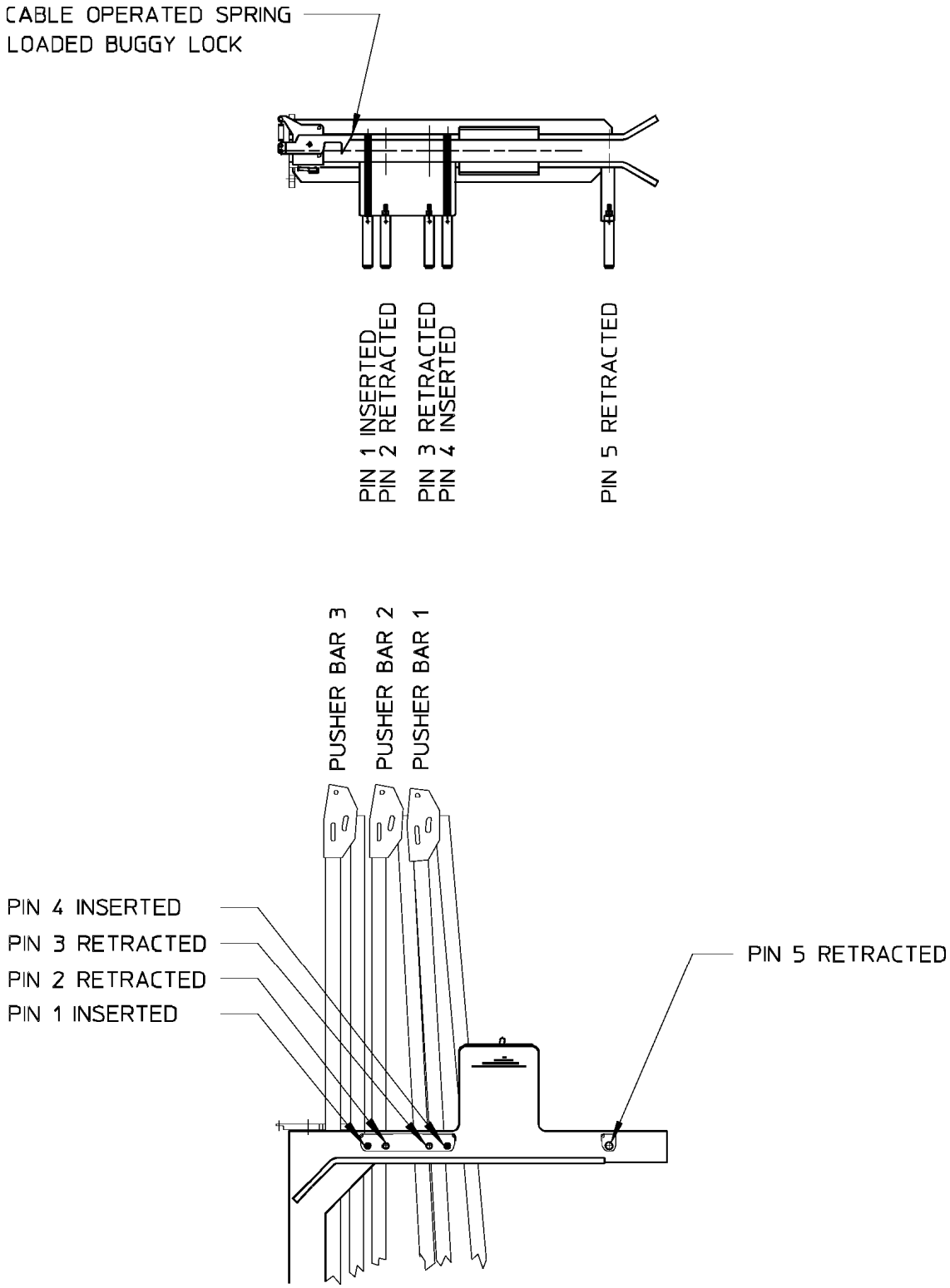

FIGURE 3
LOCK PIN CONFIGURATION WITH PROJECTOR BUGGY,
RECORDER BUGGY AND PUSHER BAR 1 DEPLOYED

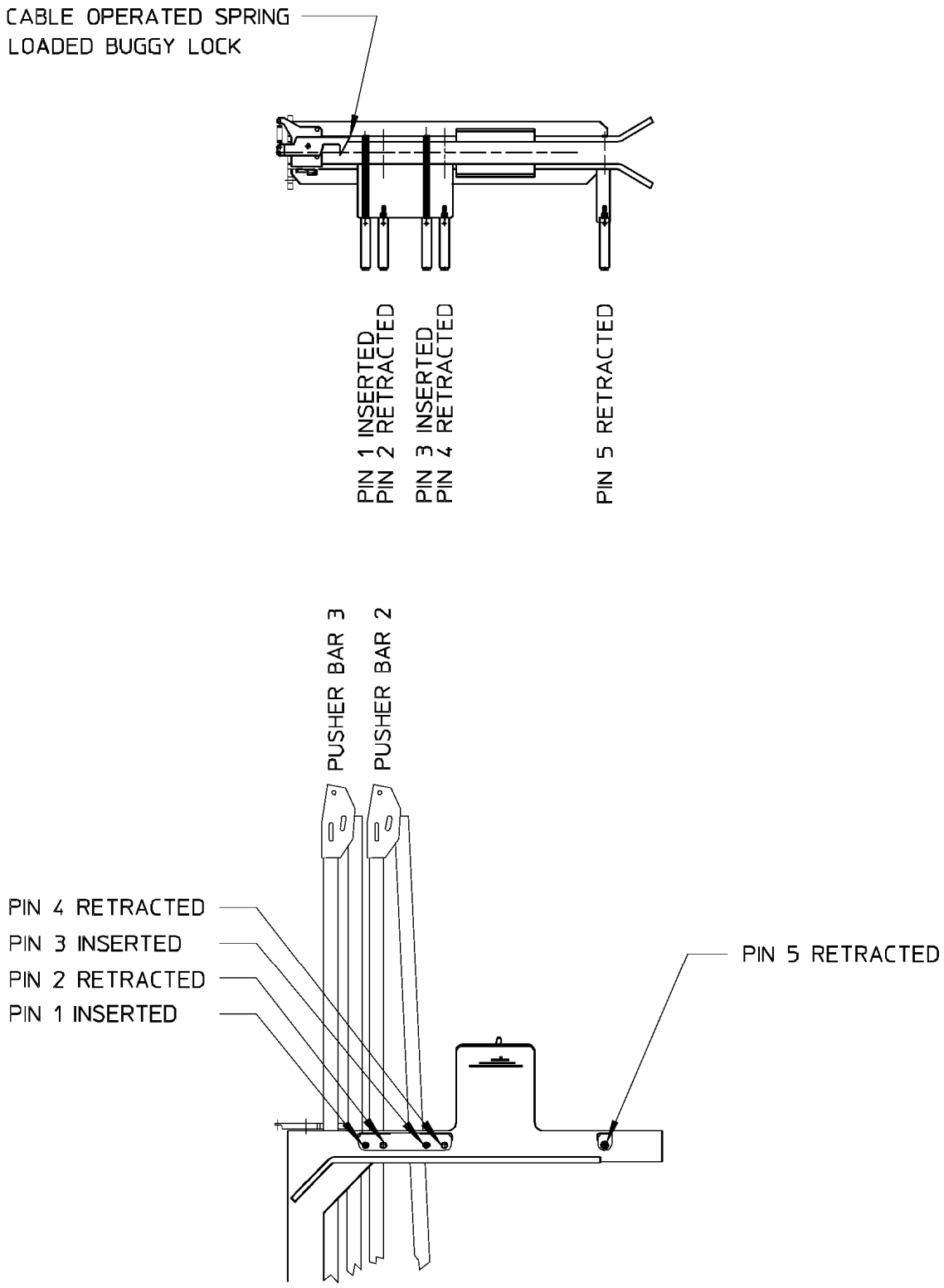

FIGURE 4
LOCK PIN CONFIGURATION WITH PROJECTOR BUGGY,
RECORDER BUGGY AND PUSHER BARS 1 & 2 DEPLOYED

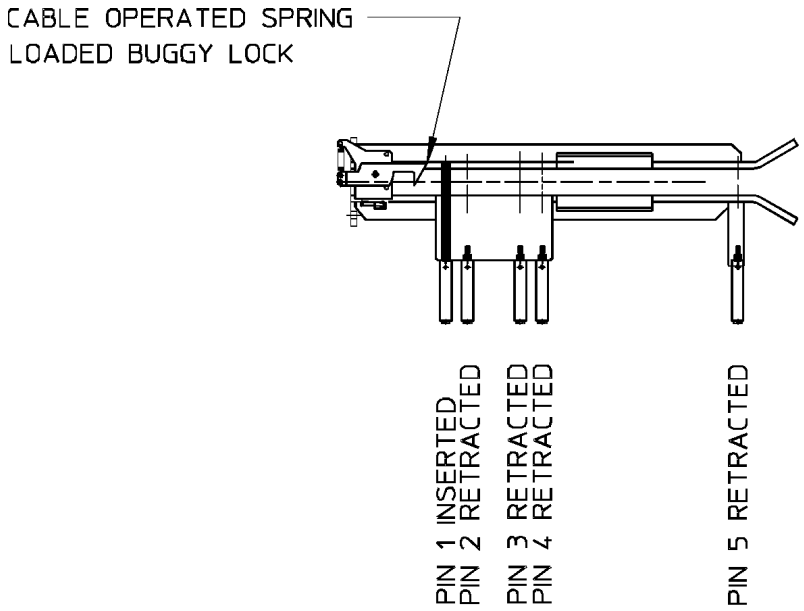

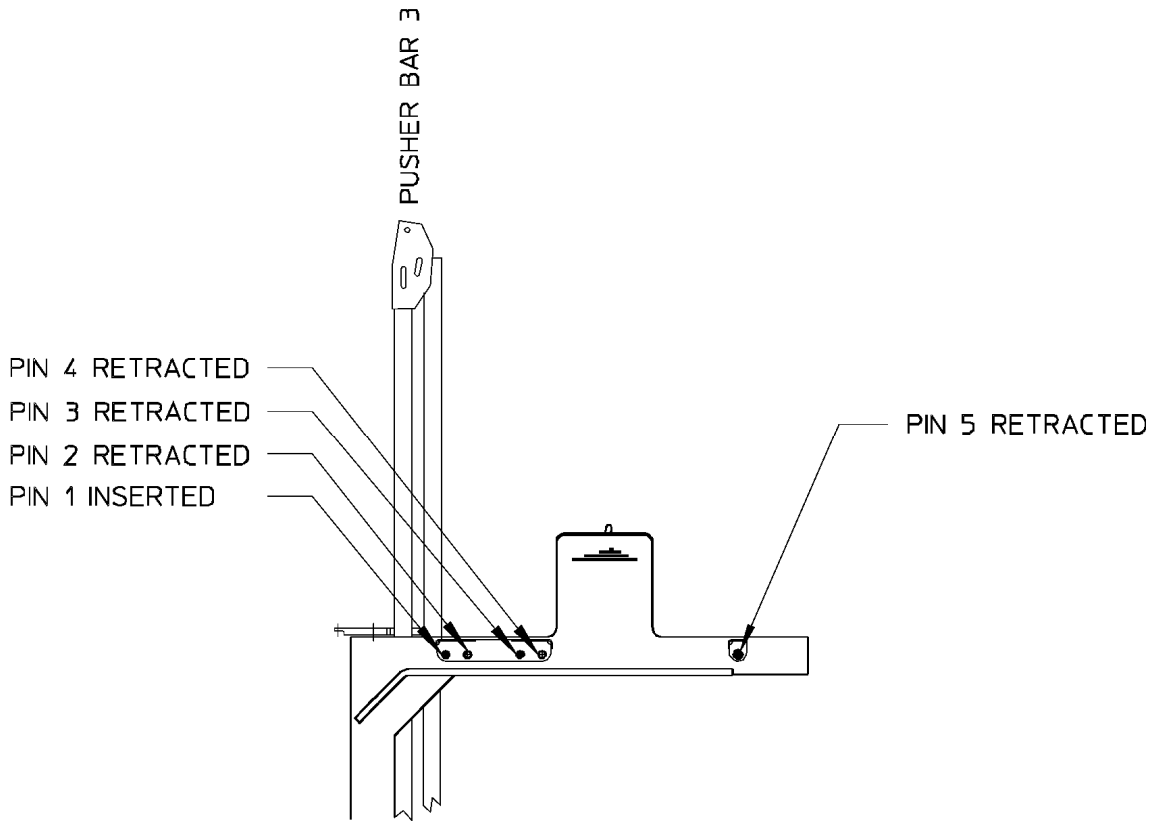

STORING PUSHER BARS

1. Slowly fold up pusher bar 3 into the buggy lift frame until it engages the spring loaded buggy lock. Then be sure to insert lock pin 1 before proceeding (see Figure 4).

2. Slowly fold up pusher bar 2 into the buggy lift frame. Insert lock pin 3 temporarily to secure pusher bar 2 (see Figure 3).

3. Slowly fold up pusher bar 1 into the buggy lift frame. As it reaches the lift frame, retract lock pin 3. Continue to fold up pusher bar 1 into the buggy lift frame until it can be secured by inserting lock pin 4 (see Figure 2).

4. Slowly fold up the recorder buggy into the buggy lift frame. Store the projector buggy on the buggy lift frame and insert lock pin 5 to secure it (see Figure 1).

© 2006 HARSCO TRACK TECHNOLOGIES, HARSCO CORPORATION

415 North Main Street
Fairmont, MN
56031-1837
Tel: (507) 235-3361
Fax: (507) 235-7370

2401 Edmund Road, Box 20
Cayce-West Columbia, SC
29171-0020
Tel: (803) 822-9160
Fax: (803) 822-7471

200 South Jackson Road
Ludington, MI
49431
Tel: (231) 843-3431
Fax: (231) 843-1644

Printed In U.S.A.

HARSCO RAIL

www.harscorail.com

SERVICE BULLETIN
MAINTENANCE OF WAY EQUIPMENT

DATE: 7-29-2009 **BULLETIN NO:**09-011

TITLE: Service/Parking Brake Application

RATING:

- [ ] **DIRECTIVE** (Action Is Required)
- [x] **ALERT** (Potential Problem)
- [ ] **INFORMATION** (Action Is Optional)
- [ ] **PRODUCT IMPROVEMENT** (Enhance Product)

PRODUCT SERIES / MODEL: Tampers: MK III, C-Series, MK IV and MK VI
Track Stabilizer: TS-30

SERIAL NO: All Models

SUMMARY: This bulletin is a follow up to the instructions found in the operation and maintenance manuals for Tamper models MK III, C-Series, MK IV, MK VI and Track Stabilizer model TS-30 concerning application of the SERVICE and PARKING/SPRING APPLIED BRAKES. It is extremely important that the correct procedure be followed to APPLY and RELEASE the Parking and Service Brakes. Refer to Figure 1 - Figure 6 on the following pages.

OPERATIONAL IMPACT: To ALERT operators and maintainers to the importance of following the instructions as stated in the manual for APPLYING and RELEASING the brakes. This alert is to prevent unintentional movement of the machine that may cause damage to the machine and injury to personnel.

ACTION: Always START and END ALL machine related operations (i.e.,Starting, Travel, Work, Adjustments, Maintenance and Repairs) with the SERVICE BRAKE FULLY RELEASED and PARKING/SPRING BRAKE APPLIED.

CONTACT: If you have any questions or if we can be of any service, please contact the Service Department at the Harsco Rail Columbia, SC. facility. 2401 Edmund Rd Cayce West Columbia, SC 29171-0020 Tel: (803) 822-7546

For MK III and C-Series Models

Parking/Spring Brake Control Knob
- Push to APPLY
- Pull to RELEASE

Figure 1

Service Brake Control Lever

Release

Apply

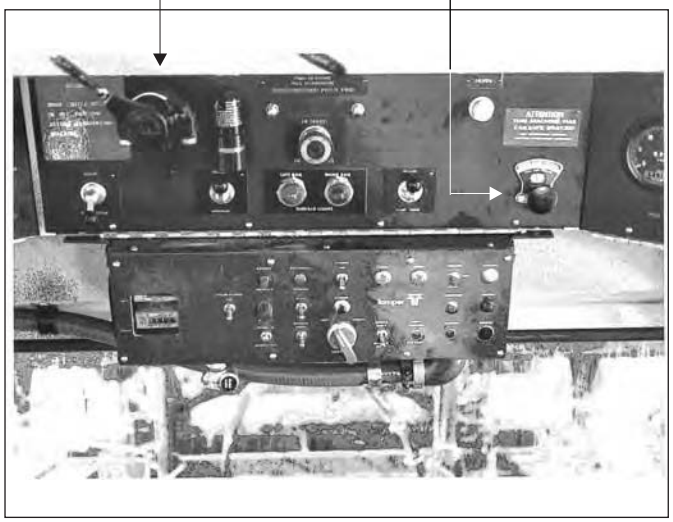

Figure 2: MK III Models Parking and Service Brake Controls Location.

Service Brake Control Lever

Release

Apply

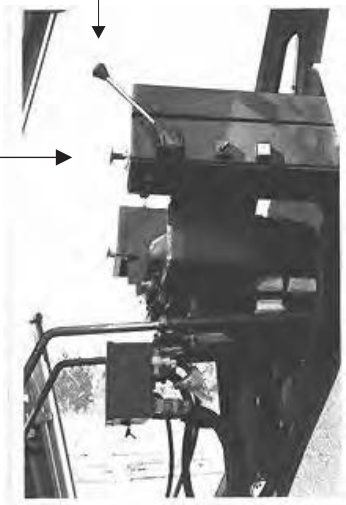

Figure 3: C-Series Models Parking and Service Brake Controls Location.

Procedure:

- Move the Service Brake Lever to the FULL Release position. Refer to Figures 2, 3, 4 and 5.

- Push the Parking/Spring Brake Knob to APPLY the Parking/Spring Brake. Refer to Figures 1-6.

NOTE: As an additional safety precaution, chock the wheels, especially on grades or inclines.

For MK IV, MK VI and TS-30 Models

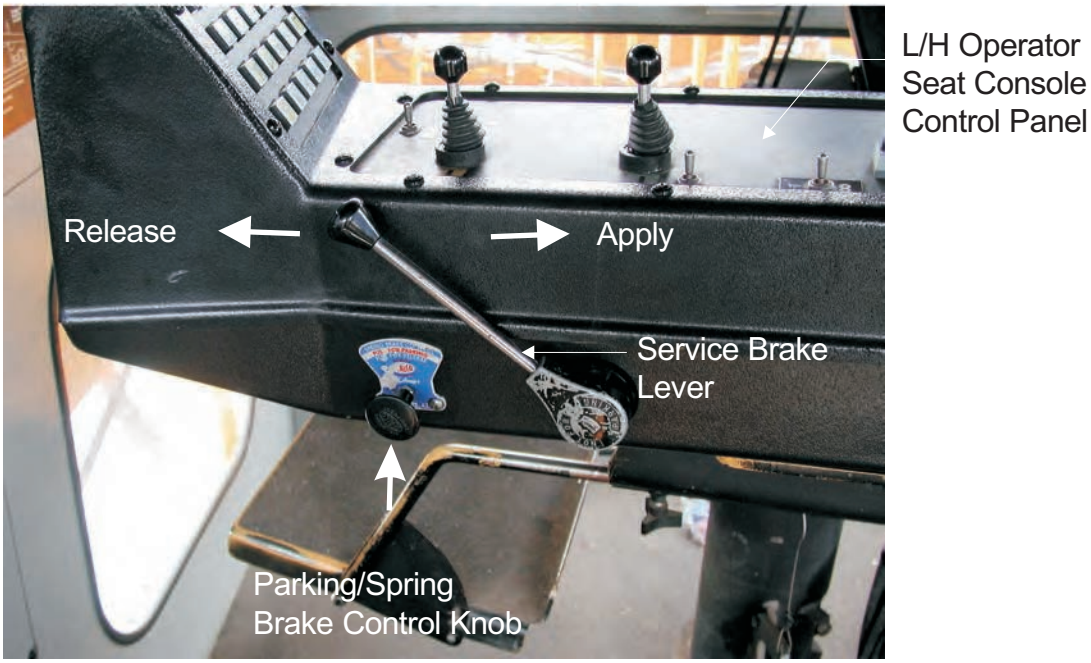

Figure 4: MK IV and MK VI Models (up to 2005) Parking and Service Brakes Controls Location.

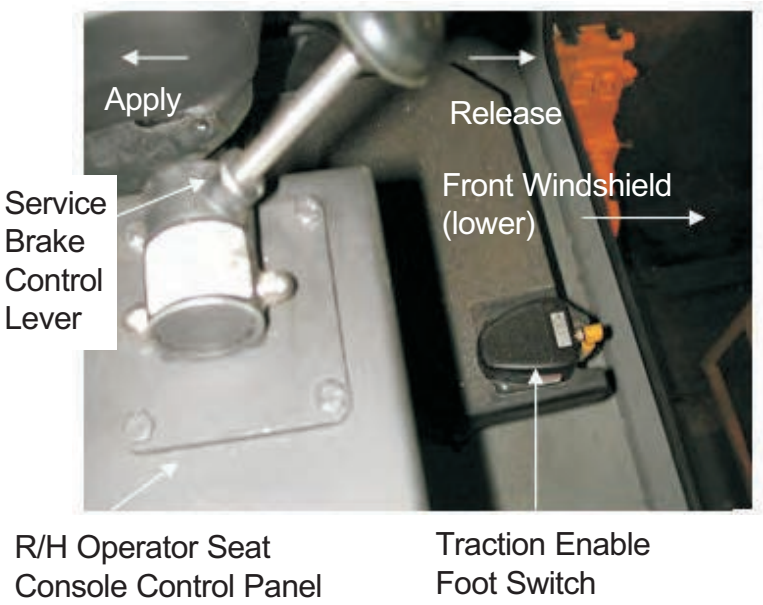

Figure 4A:TS-30 Models (up to 2005) Service Brake Control Location

Figure 5: MK IV, MK VI and TS-30 Models (2005 to the present) Parking and Service Brakes Controls Location.

NOTE: The Parking/ Spring Brake Control has been relocated to the position behind the right operator seat console. (as shown above and in Figure 6). In addition, the Service Brake Control is now spring loaded. This feature allows the control lever to automatically return to the Release position when released form the Apply position.

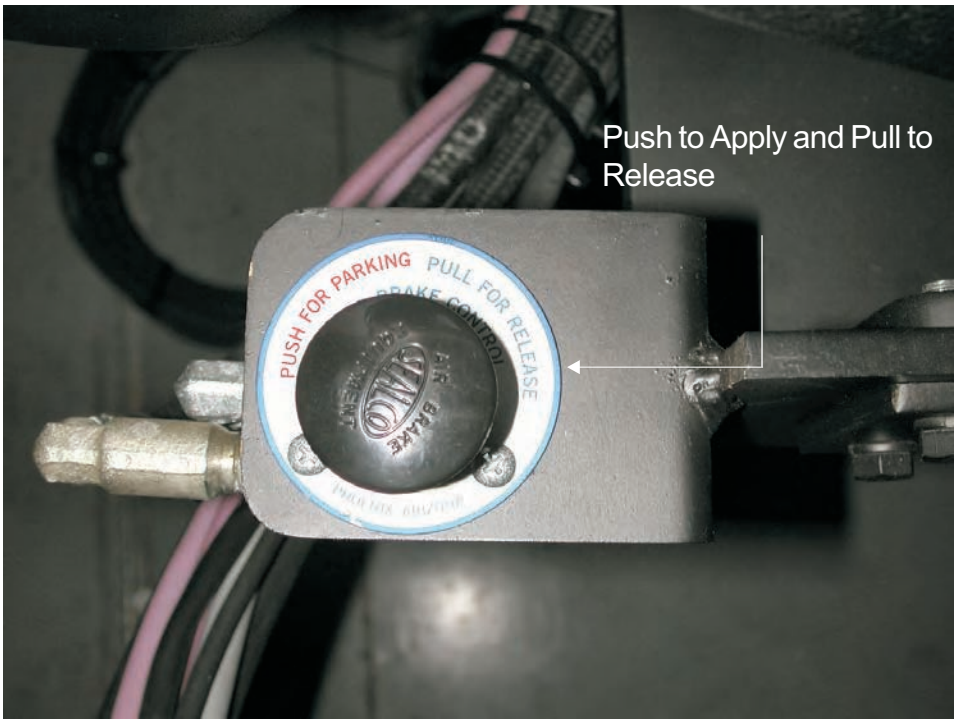

Figure 6: Parking/Spring Brake Control (2005 models to the present)

NOTE: It is very important that the instructions for properly applying the Parking/Spring Brake be followed as stated in the operation manuals.

© 2009 HARSCO RAIL HARSCO CORPORATION

415 North Main Street
Fairmont, MN
56031-1837
Tel: (507) 235-3361
Fax: (507) 235-7370

2401 Edmund Road, Box 20
Cayce-West Columbia, SC
29171-0020
Tel: (803) 822-9160
Fax: (803) 822-7471

200 South Jackson Road
Ludington, MI
49431
Tel: (231) 843-3431
Fax: (231) 843-1644

Printed In U.S.A.

APPENDIX C
SAE STANDARDS

APPENDIX C - SAE STANDARDS
TABLE OF CONTENTS

* SAE J1273 - AUG 2004 . . . . . .C - 2
Recommended Practices for Hydraulic Hose Assemblies

* Reprinted with permission SAE J1273 AUG 2004 - © 2004 SAE International

DISCLAIMER

Harsco Rail Recommends That All Hose, Hose Assemblies And/or Fittings Replaced By The Customer Should Be Equal To Or Exceed The Current Specifications Of The Original Equipment Supplied By Harsco Rail. Harsco Rail Will Not Be Liable For Any Claims Of Personal Injury Resulting From The Use Of Hose, Hose Assemblies And/or Fittings That Do Not Meet Current Original Equipment Specifications. The Customer Is Advised To Comply With SAE J1273 August 2004, Recommended Practices For Hydraulic Hose Assemblies.

SAE International™

SURFACE VEHICLE RECOMMENDED PRACTICE

SAE J1273 REV. AUG2004

Issued 1979-09
Revised 2004-08

Superseding J1273 DEC2002

Recommended Practices for Hydraulic Hose Assemblies

Foreword—This SAE Recommended Practice is intended as a guide to consider when selecting, routing, fabricating, installing, replacing, maintaining, and storing hose for fluid-power systems. It is subject to change to keep pace with experience and technical advances. For those new to hose use in fluid-power systems, this guide outlines practices to note during each phase of system design and use. Experienced designers and users skilled in achieving proper results, as well as the less experienced, can use this outline as a list of considerations to keep in mind.

Fluid power systems are complex and require extensive knowledge of both the system requirements and the various types of hose. Therefore, all-inclusive, detailed, step-by-step instructions are not practical and are beyond the scope of this document. Less experienced designers and users who need more information can consult specialists such as hose suppliers and manufacturers. This guide can improve the communication process.

Safety Considerations—These recommended practices involve safety considerations; note these carefully during all phases of design and use of hose systems. Improper selection, fabrication, installation, or maintenance of hose and hose assemblies for fluid-power systems may result in serious personal injury or property damage. These recommended practices can reduce the likelihood of component or system failure, thereby reducing the risk of injury or damage.

TABLE OF CONTENTS

1. Scope 2
2. References 2
3. Explanation of Terms 2
4. Safety Considerations 2
5. Hose Selection and Routing 3
6. Hose-Assembly Fabrication 10
7. Hose Installation and Replacement 11
8. Maintenance Inspection 13

SAE Technical Standards Board Rules provide that: "This report is published by SAE to advance the state of technical and engineering sciences. The use of this report is entirely voluntary, and its applicability and suitability for any particular use, including any patent infringement arising therefrom, is the sole responsibility of the user."

SAE reviews each technical report at least every five years at which time it may be reaffirmed, revised, or cancelled. SAE invites your written comments and suggestions.

Copyright © 2004 SAE International
All rights reserved. No part of this publication may be reproduced, stored in a retrieval system or transmitted, in any form or by any means, electronic, mechanical, photocopying, recording, or otherwise, without the prior written permission of SAE.

TO PLACE A DOCUMENT ORDER: Tel: 877-606-7323 (inside USA and Canada)
Tel: 724-776-4970 (outside USA)
Fax: 724-776-0790
Email: custsvc@sae.org
SAE WEB ADDRESS: http://www.sae.org

SAE J1273 Revised AUG2004

9. Hose Storage 13

10. Notes 14

1. ***Scope***—SAE J1273 provides guidelines for selection, routing, fabrication, installation, replacement, maintenance, and storage of hose and hose assemblies for fluid-power systems. Many of these SAE Recommended Practices also may be suitable for other hoses and systems.

2. ***References***

2.1 **Applicable Publications**—The following publications form a part of this specification to the extent specified herein. Unless otherwise specified, the latest issue of SAE publications shall apply.

2.1.1 SAE PUBLICATIONS—Available from SAE, 400 Commonwealth Drive, Warrendale, PA 15096-0001.

SAE J343—Test and Procedures for SAE 100 R Series Hydraulic Hose and Hose Assemblies
SAE J514—Hydraulic Tube Fittings
SAE J517—Hydraulic Hose
SAE J1927—Cumulative Damage Analysis for Hydraulic Hose Assemblies

2.1.2 ISO PUBLICATION—Available from ANSI, 25 West 43rd Street, New York, NY 10036-8002.

ISO 3457—Earth moving machinery—Guards and shields—Definitions and specifications

3. ***Definitions***—These explanations serve only to clarify this document and are not intended to stand alone. They are presented sequentially, with the former helping to explain the latter.

3.1 Fluid Power—Energy transmitted and controlled using pressurized hydraulic fluids or compressed air.

3.2 Hose—Flexible conductor. In this document, the term hose also may refer to a hose assembly with related accessories used in fluid power applications.

3.3 Hose Fitting or Fitting—Connector which can be attached to the end of a hose.

3.4 Hose Assembly—Hose with hose fittings attached.

3.5 Hose Failure—Occurrence in which a hose stops meeting system requirements.

3.6 Hose Service Life—Length of time a hose meets system requirements without needing replacement.

4. ***Safety Considerations***—Listed in 4.1 to 4.7 are some potential conditions and situations that may lead to personal injury and/or property damage. This list is not necessarily all inclusive. Consider reasonable and feasible means, including those described in this section, to reduce the risk of injuries or property damage.

Training, including the information in this document, for operators, maintenance personnel, and other individuals working with hoses under pressure is encouraged.

4.1 **Fluid Injections**—Fine streams of escaping pressurized fluid can penetrate skin and enter a human body. These fluid injections may cause severe tissue damage and loss of limb.

Consider various means to reduce the risk of fluid injections, particularly in areas normally occupied by operators. Consider careful routing, adjacent components, warnings, guards, shields, and training programs.

SAE J1273 Revised AUG2004

Relieve pressure before disconnecting hydraulic or other lines. Tighten all connections before applying pressure.

Avoid contact with escaping fluids. Treat all leaks as though pressurized and hot enough to burn skin. Never use any part of your body to check a hose for leaks.

If a fluid-injection accident occurs, see a doctor immediately. **DO NOT DELAY OR TREAT AS A SIMPLE CUT!** Any fluid injected into the skin must be surgically removed *within a few hours* or gangrene may result. Doctors unfamiliar with this type of injury should consult a knowledgeable medical source.

4.2 **Whipping Hose**—If a pressurized hose assembly blows apart, the fittings can be thrown off at high speed, and the loose hose can flail or whip with great force. This is particularly true in compressible-fluid systems.

When this risk exists, consider guards and restraints to protect against injury.

4.3 **Burns from Conveyed Fluids**—Fluid-power media may reach temperatures that can burn human skin. If there is risk of burns from escaping fluid, consider guards and shields to prevent injury, particularly in areas normally occupied by operators.

4.4 **Fire and Explosions from Conveyed Fluids**—Most fluid-power media, including fire-resistant hydraulic fluids, will burn under certain conditions. Fluids which escape from pressurized systems may form a mist or fine spray which can flash or explode upon contact with an ignition source.

Consider selecting, guarding, and routing hose to minimize the risk of combustion (see Section 5 and ISO 3457).

4.5 **Fire and Explosions from Static-Electric Discharge**—Fluid passing through hose can generate static electricity, resulting in static-electric discharge. This may create sparks that can ignite system fluids or gases in the surrounding atmosphere.

When this potential exists, select hose specifically designed to carry the static-electric charge to ground.

4.6 **Electrical Shock**—Electrocution could occur if hose conducts electricity through a person. Most hoses are conductive. Many contain metal or have metal fittings. Even nonconductive hoses can be conduits for electricity if they carry conductive fluids.

Be aware of routing or using hose near electrical sources. When this cannot be avoided, select appropriate hose. Nonconductive hoses should be considered. SAE J517—100R7 and 100R8 hoses, with orange covers marked "Nonconductive" are available for applications requiring nonconductive hose.

4.7 **Mechanisms Controlled by Fluid Power**—Mechanisms controlled by fluids in hoses can become hazardous when a hose fails. For example, when a hose bursts, objects supported by fluid pressure may fall, or vehicles or machines may lose their brakes or steering.

If mechanisms are controlled by fluid power, consider safe modes of failure that minimize risks of injury or damage.

5. ***Hose Selection and Routing***—A wide variety of interacting factors influence hose service life and the ability of each fluid-power system to operate satisfactorily, and the combined effects of these factors on service life are often unpredictable. Therefore, these documents should not be construed as design standards. For applications outside the specifications in SAE J517, SAE J514, or other relevant design standards, performance of hose assemblies should be determined by appropriate testing.

SAE J1273 Revised AUG2004

Carefully analyze each system. Then design routings and select hose and related components to meet the system-performance and hose-service-life requirements, and to minimize the risks of personal injury and/or property damage. Consider the following factors:

5.1 **System Pressures**—Excessive pressure can accelerate hose assembly failure. Analyze the steady-state pressures, and the frequency and amplitude of pressure surges, such as pulses and spikes. These are rapid and transient rises in pressure which may not be indicated on many common pressure gages and can be identified best on high-frequency-response electronic measuring instruments.

For maximum hose service life, hose selection should be based on a system pressure, including surges, that is less than the hose maximum working pressure. Hose may be used above its maximum working pressure where reduced life expectancy is acceptable. SAE J1927 provides one method to help predict wire-reinforced hose service life for a given hydraulic application, where the surge pressure peaks vary, and/or the highest pressure peaks occur infrequently.

5.2 **Suction**—For suction applications, such as inlet flow to pumps, select hose to withstand both the negative and positive pressures the system imposes on the hose.

5.3 **External Pressure**—In certain applications, such as in autoclaves or under water, the external environmental pressures may exceed the fluid pressure inside the hose. In these applications, consider the external pressures, and if necessary, consult the manufacturers.

5.4 **Temperature**—Exceeding hose temperature ratings may significantly reduce hose life. Select hose so the fluid and ambient temperatures, both static and transient, fall within the hose ratings. The effects of external heat sources should not raise the temperature of the hose above its maximum operating temperature. Select hose, heat shields, sleeving, and other methods for these requirements, and route or shield hose to avoid hose damage from external heat sources.

5.5 **Permeation**—Permeation, or effusion, is seepage of fluid through the hose. Certain materials in hose construction are more permeable than others. Consider the effects of permeation when selecting hose, especially with gaseous fluids. Consult the hose and fluid manufacturers for permeability information.

5.6 **Hose-Material Compatibility**—Variables that can affect compatibility of system fluids with hose materials include, but are not limited to:

a. Fluid pressure
b. Temperature
c. Concentration
d. Duration of exposure

Because of permeation (see 5.5), consider compatibility of system fluids with the hose, tube, cover, reinforcement, and fittings. Consult the fluid and hose manufacturers for compatibility information.

NOTE—Many fluid/elastomer compatibility tables in manufacturers' catalogs show ratings based on fluids at 21 °C, room temperature. These ratings may change at other temperatures. Carefully read the notes on the compatibility tables, and if in doubt, consult the manufacturer.

SAE J1273 Revised AUG2004

5.7 Environment—Environmental conditions can cause hose and fitting degradation. Conditions to evaluate include, but are not limited to:

a. Ultraviolet light
b. Salt water
c. Air pollutants
d. Temperature (see 5.4)
e. Ozone
f. Chemicals
g. Electricity
h. Abrasion

If necessary, consult the manufacturers for more information.

5.8 Static-Electric Discharge—Fluid passing through hose can generate static electricity resulting in static-electric discharge. This may create sparks that can puncture hose. If this potential exists, select hose with sufficient conductivity to carry the static-electric charge to ground.

5.9 Sizing—The power transmitted by pressurized fluid varies with pressure and rate of flow. Select hose with adequate size to minimize pressure loss, and to avoid hose damage from heat generation or excessive velocity. Conduct calculations, or consult the manufacturers for sizing at flow velocities.

5.10 Unintended Uses—Hose assemblies are designed for the internal forces of conducted fluids. Do not pull hose or use it for purposes that may apply external forces for which the hose or fittings were not designed.

5.11 Specifications and Standards—When selecting hose and fittings for specific applications, refer to applicable government, industry, and manufacturer's specifications and standards.

5.12 Unusual Applications—Applications not addressed by the manufacturer or by industry standards may require special testing prior to selecting hose.

5.13 Hose Cleanliness—The cleanliness requirements of system components, other than hose, will determine the cleanliness requirements of the application. Consult the component manufacturers' cleanliness information for all components in the system. Hose assemblies vary in cleanliness levels; therefore, specify hose assemblies with adequate cleanliness for the system.

5.14 Hose Fittings—Selection of the proper hose fittings for the hose and application is essential for proper operation and safe use of hose and related assembly equipment. Hose fittings are qualified with the hose. Therefore, select only hose fittings compatible with the hose for the applications.

Improper selection of hose fittings or related assembly equipment for the application can result in injury or damage from leaks, or from hose assemblies blowing apart (see 4.2, 6.2, 6.3, and 6.4).

5.15 Vibration—Vibration can reduce hose service life. If required, conduct tests to evaluate the frequency and amplitude of system vibration. Clamps or other means may be used to reduce the effects of vibration. Consider the vibration requirements when selecting hose and predicting service life.

5.16 Hose Cover Protection—Protect the hose cover from abrasion, erosion, snagging, and cutting. Special abrasion-resistant hoses and hose guards are available for additional protection. Route hose to reduce abrasion from hose rubbing other hose or objects that may abrade it. (See Figure 1)

SAE J1273 Revised AUG2004

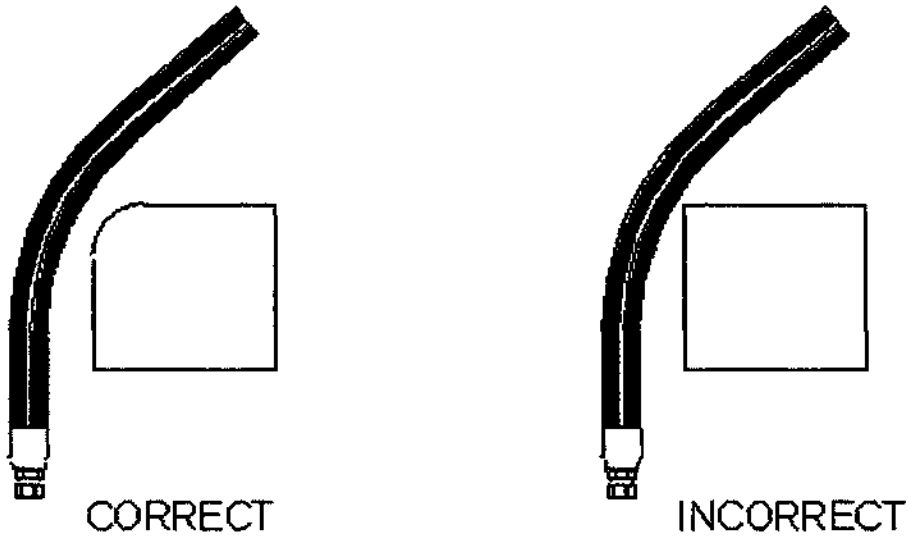

FIGURE 1—PREVENTION OF EXTERNAL DAMAGE

5.17 External Physical Abuse—Route hose to avoid:

a. Tensile loads
b. Side loads
c. Flattening
d. Thread damage
e. Kinking
f. Damage to sealing surfaces
g. Abrasion
h. Twisting

5.18 Swivel-Type Adapters—Swivel-type fittings or adapters do not transfer torque to hose while being tightened. Use these as needed to prevent twisting during installation.

5.19 Live Swivels—If two components in the system are rotating in relation to each other, live swivels may be necessary. These connectors reduce the torque transmitted to the hose.

5.20 Slings and Clamps—Use slings and clamps to support heavy or long hose and to keep it away from moving parts. Use clamps that prevent hose movement that will cause abrasion.

5.21 Minimum Bend Radius—The minimum bend radius is defined in SAE J343 and is specified in other SAE standards and hose manufacturer's product literature. Routing at less than minimum bend radius may reduce hose life. Sharp bending at the hose/fitting juncture may result in leaking, hose rupturing, or the hose assembly blowing apart (see 4.2 and Figures 2A and 2B).

SAE J1273 Revised AUG2004

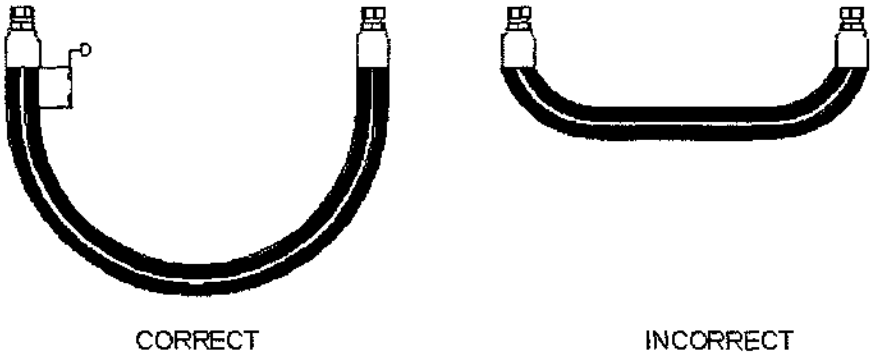

FIGURE 2A—MINIMUM BEND RADIUS

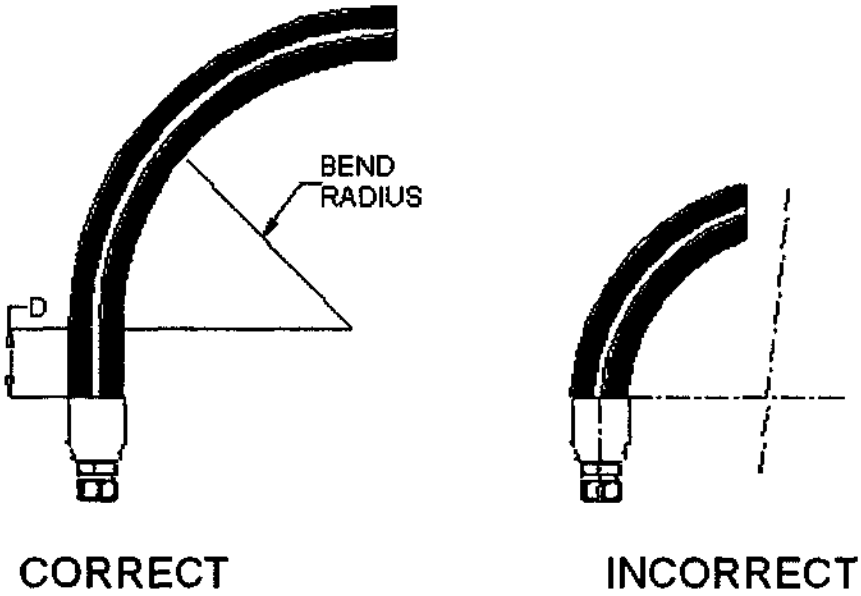

FIGURE 2B—MINIMUM BEND RADIUS

SAE J1273 Revised AUG2004

5.22 Elbows and Adapters—In special cases, use elbows or adapters to relieve hose strain (see Figure 3).

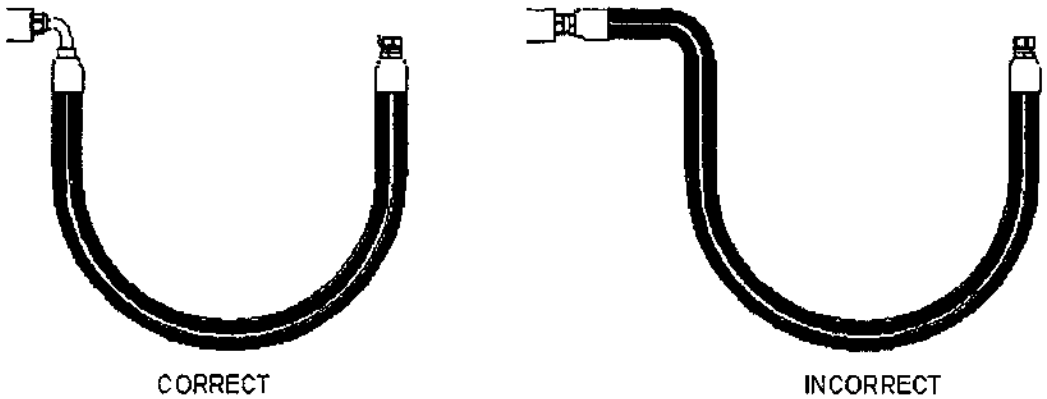

FIGURE 3—ELBOWS AND ADAPTERS

5.23 Lengths—Unnecessarily long hose can increase pressure drop and affect system performance. When pressurized, hose that is too short may pull loose from its fittings, or stress the fitting connections, causing premature metallic or seal failures. When establishing hose length, refer to Figures 4, 5, and 6; and use the following practices:

5.23.1 MOTION ABSORPTION—Provide adequate hose length to distribute movement and prevent bends smaller than the minimum bend radius.

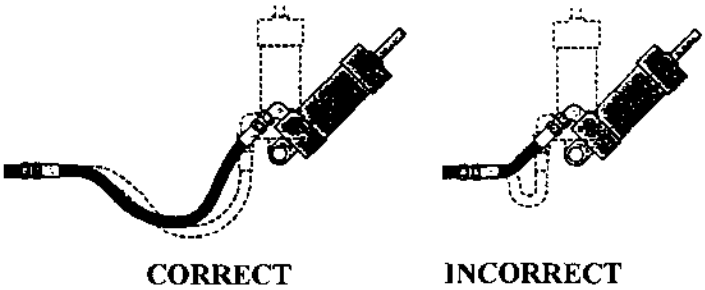

FIGURE 4—MOTION ABSORPTION

5.23.2 HOSE AND MACHINE TOLERANCES—Design hose to allow for changes in length due to machine motion and tolerances.

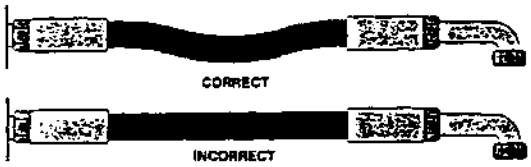

FIGURE 5—HOSE AND MACHINE TOLERANCES

SAE J1273 Revised AUG2004

5.23.3 HOSE LENGTH CHANGE DUE TO PRESSURE—Design hose to accommodate length changes from changing pressures. Do not cross or clamp together high- and low-pressure hoses. The difference in length changes could wear the hose covers.

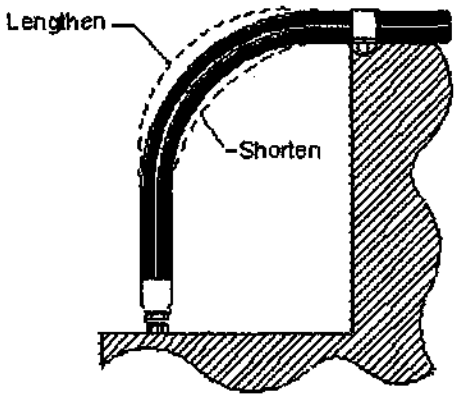

FIGURE 6—HOSE LENGTH CHANGE DUE TO PRESSURE

5.24 Hose Movement and Bending—Hose allows relative motion between system components. Analyze this motion when designing hose systems. The number of cycles per day may significantly affect hose life. Also avoid multiple planes of motion and twisting motion. Consider the motion of the hose when selecting hose and predicting service life. In applications that require hose to move or bend, refer to Figures 7A, 7B, and 8; and use these practices:

5.24.1 BEND IN ONLY ONE PLANE TO AVOID TWISTING

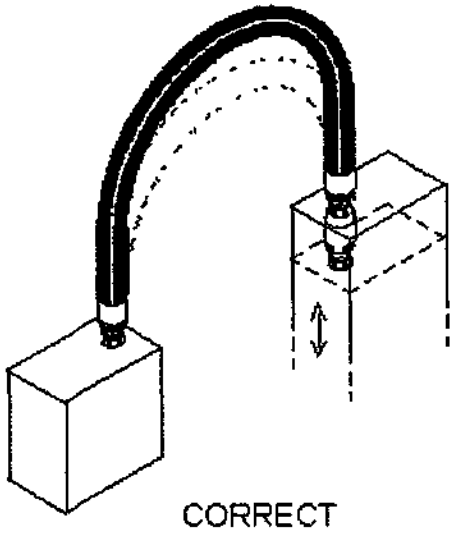

FIGURE 7A—BEND IN ONLY ONE PLANE TO AVOID TWISTING

SAE J1273 Revised AUG2004

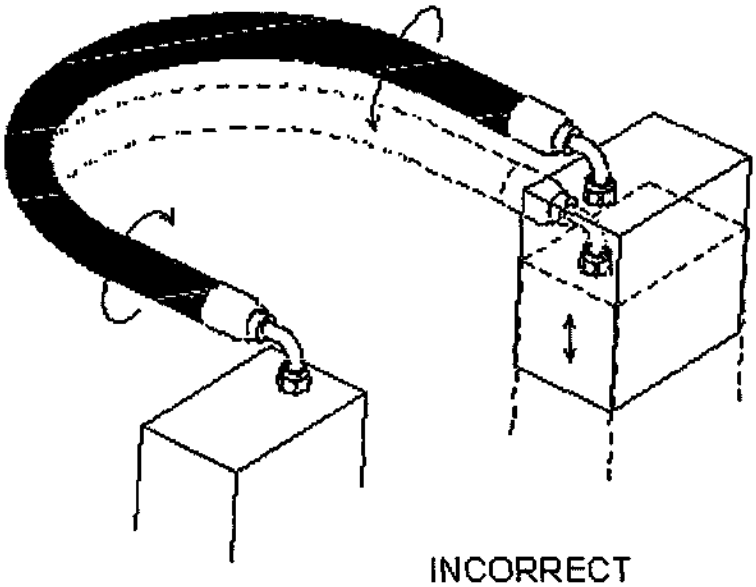

FIGURE 7B—BEND IN ONLY ONE PLANE TO AVOID TWISTING

5.24.2 PREVENT HOSE BENDING IN MORE THAN ONE PLANE—If hose follows a compound bend, couple it into separate segments, or clamp it into segments that flex in only one plane.

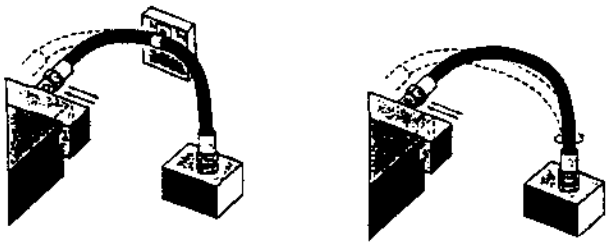

FIGURE 8—PREVENT HOSE BENDING IN MORE THAN ONE PLANE

6. ***Hose-Assembly Fabrication***—Persons fabricating hose assemblies should be trained in the proper use of equipment and materials. The manufacturers' instructions and the practices listed as follows must be followed. Properly assembled fittings are vital to the integrity of a hose assembly. Improperly assembled fittings can separate from the hose and may cause serious injury or property damage from whipping hose, or from fire or explosion of vapor expelled from the hose.

SAE J1273 Revised AUG2004

6.1 Component Inspection—Prior to assembly, examine components for:

a. Style or type
b. Cleanliness
c. Loose covers
d. Nicks
e. Size
f. Inside obstructions
g. Visible defects
h. Damage
i. Length
j. Blisters
k. Burrs

6.2 Hose Fittings—Hose fitting components from one manufacturer are not usually compatible with fitting components supplied by another manufacturer. For example, do not use a hose fitting nipple from one manufacturer with a hose socket from another manufacturer.

It is the responsibility of the fabricator to consult the manufacturer's written instructions or the manufacturer directly for information on proper fitting components.

6.3 Hose and Fitting Compatibility—Care must be taken to determine proper compatibility between the hose and fitting. Base selection on the manufacturers' recommendations substantiated by testing to industry standards such as SAE J517. Hose from one manufacturer is not usually compatible with fittings from another. Do not intermix hose and fittings from two manufacturers without approval from both manufacturers.

6.4 Hose Assembly Equipment—Assembly equipment from one manufacturer is usually not interchangeable with that from another manufacturer. Hoses and fittings from one manufacturer should not generally be assembled with the equipment of another manufacturer.

6.5 Safety Equipment—During fabrication, use proper safety equipment, including eye protection, breathing apparatus, and adequate ventilation.

6.6 Reuse of Hose and Fittings—When fabricating hose assemblies, do **not** reuse:

a. Field-attachable fittings that have blown or pulled off hose
b. Any part of hose fittings that were permanently crimped or swaged to hose
c. Hose that has been in service after system checkout (see 7.7)

6.7 Cleanliness of Hose Assemblies—Hose assemblies may be contaminated during fabrication. Clean hoses to specified cleanliness levels (see 5.13).

7. *Hose Installation and Replacement*—Use the following practices when installing hose assemblies in new systems or replacing hose assemblies in existing systems:

7.1 Pre-Installation Inspection—Before installing hose assemblies, examine:

a. Hose length and routing for compliance with original design
b. Assemblies for correct style, size, length, and visible nonconformities
c. Fitting sealing surfaces for burrs, nicks, or other damage

NOTE—When replacing hose assemblies in existing systems, verify that the replacement is of equal quality to the original assembly.

SAE J1273 Revised AUG2004

7.2 **Handling During Installation**—Handle hose with care during installation. Kinking hose, or bending at less than minimum bend radius may reduce hose life. Avoid sharp bending at the hose/fitting juncture (see 5.21).

7.3 **Twist Angle and Orientation**—Pressure applied to a twisted hose may shorten the life of the hose or loosen the connections. To avoid twisting, use the hose lay line or marking as a reference (see Figure 9).

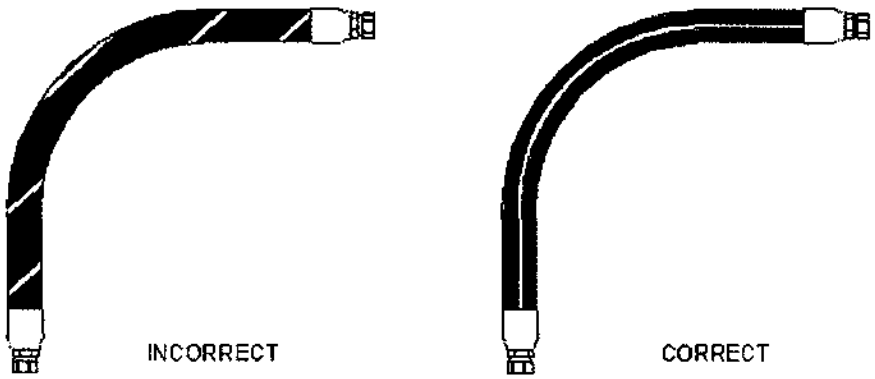

FIGURE 9—TWIST ANGLE AND ORIENTATION

7.4 **Securement and Protection**—Install necessary restraints and protective devices. Determine that such devices do not create additional stress or wear points.

7.5 **Routing**—Review proper routing practices provided in Section 5 and make appropriate corrections to obtain optimum performance.

7.6 **Assembly Torque**—The connection end of a hose fitting is normally threaded to obtain a tight pressure seal when attached to a port, an adapter, or another fitting. Sometimes bolts or screws provide the threaded connection. Each size and type of connection requires different torque values, and these may vary due to type of material or exterior coating.

Follow appropriate torquing instructions to obtain a proper pressure seal without over-torquing. A properly calibrated torque wrench should be used to tighten each connection, except when the manufacturer specifies tightening a specified number of hex flat turns beyond finger tight to obtain a seal.

7.7 **System Checkouts**—In hydraulic or other liquid systems, eliminate all air entrapment after completing the installation. Follow manufacturers' instructions to test the system for possible malfunctions and leaks.

7.7.1 To avoid injury during system checkouts:

a. Do not touch any part of the system when checking for leaks (see 4.1).
b. Stay out of potentially hazardous areas while testing hose systems (see Section 4).
c. Relieve system pressure before tightening connections.

SAE J1273 Revised AUG2004

8. ***Maintenance Inspection***—A hose and fitting maintenance program may reduce equipment downtime, maintain peak operating performance, and reduce the risk of personal injury and/or property damage. The user should design and implement a maintenance program that suits the specific application and each specific hose in that application.

8.1 **Inspection Frequency**—Evaluate factors such as the nature and severity of the application, past history, and manufacturers' information to establish the frequency of visual inspections and functional tests.

8.2 **Visual Inspection (Hose and Fittings)**—Visually inspect hose and fittings for:

a. Leaks at hose fitting or in hose
b. Damaged, cut, or abraded cover
c. Exposed reinforcement
d. Kinked, crushed, flattened, or twisted hose
e. Hard, stiff, heat cracked, or charred hose
f. Blistered, soft, degraded, or loose cover
g. Cracked, damaged, or badly corroded fittings
h. Fitting slippage on hose
i. Other signs of significant deterioration

If any of these conditions exist, evaluate the hose assemblies for correction or replacement.

8.3 **Visual Inspection (All Other Components)**—When visually inspecting hose and fittings, inspect for related items including:

a. Leaking ports
b. Damaged or missing hose clamps, guards, or shields
c. Excessive dirt and debris around hose
d. System fluid: level, type, contamination, condition, and air entrainment

If any of these are found, address them appropriately.

8.4 **Functional Test**—Functional tests determine if systems with hose are leak free and operating properly. Carry out functional tests per information from equipment manufacturers.

9. ***Hose Storage***—Age control and the manner of storage can affect hose life. Use the following practices when storing hose.

9.1 **Age Control**—Maintain a system of age control to determine that hose is used before its shelf life has expired. Shelf life is the period of time when it is reasonable to expect the hose to retain full capabilities for rendering the intended service.

Store hose in a manner that facilitates age control and first-in, first-out usage based on manufacturing date on hose or hose assembly. Per SAE J517:

a. Shelf life of rubber hose in bulk form, or in hose assemblies passing visual inspection and proof test, is forty quarters (ten years) from the date of manufacture.
b. Shelf life of thermoplastic and polytetrafluoroethylene hose is considered to be unlimited.

SAE J1273 Revised AUG2004

9.2 Storage—Store hose and hose assemblies in a cool, dark, dry area with the ends capped. When storing hose, take care to avoid damage that could reduce hose life, and follow the manufacturers' information for storage and shelf life. Examples of factors that can adversely affect hose products in storage are:

a. Temperature
b. Ozone
c. Oils
d. Corrosive liquids and fumes
e. Rodents
f. Humidity
g. Ultraviolet light
h. Solvents
i. Insects
j. Radioactive materials

If there are questions regarding the quality or usability of hose or hose assemblies, evaluate appropriately:

a. Flex the hose to the minimum bend radius and compare it with new hose. After flexing, examine the cover and tube for cracks. If any appear, no matter how small, reject the hose.
b. If the hose is wire reinforced, and the hose is unusually stiff, or a cracking sound is heard during flexing, check for rust by cutting away a section of the cover from a sample. Rust would be another reason for rejection.
c. If doubt still persists, contact hose assembler to conduct proof-pressure tests or any other tests needed to verify hose quality.

10. Notes

10.1 Marginal Indicia—The (R) is for the convenience of the user in locating areas where technical revisions have been made to the previous issue of the report. If the symbol is next to the report title, it indicates a complete revision of the report.

PREPARED BY THE SAE FLUID CONDUCTORS AND CONNECTORS TECHNICAL COMMITTEE SC3—TRAINING AND EDUCATION SUBCOMMITTEE

SAE J1273 Revised AUG2004

Rationale—To correct verbiage in Section 9.1.

Relationship of SAE Standard to ISO Standard—Not applicable.

Application—SAE J1273 provides guidelines for selection, routing, fabrication, installation, replacement, maintenance, and storage of hose and hose assemblies for fluid-power systems. Many of these SAE Recommended Practices also may be suitable for other hoses and systems.

Reference Section

SAE J343—Test and Procedures for SAE 100 R Series Hydraulic Hose and Hose Assemblies

SAE J514—Hydraulic Tube Fittings

SAE J517—Hydraulic Hose

SAE J1927—Cumulative Damage Analysis for Hydraulic Hose Assemblies

ISO 3457—Earth moving machinery—Guards and shields—Definitions and specifications

Developed by the SAE Fluid Conductors and Connectors Technical Committee SC3—Training and Education Subcommittee

Sponsored by the SAE Fluid Conductor and Connectors Technical Committee

LIMITED WARRANTY

Harsco Rail warrants products of its manufacture to be free of defects in material and workmanship, under normal use and service for a period of six (6) months from date of delivery to the original user. The obligation of Harsco Rail under this warranty is limited to repairing or replacing at its factories, or other location designated by it, any part or parts thereof which are returned within 30 days of the date when failure occurs or defect is noted, with transportation charges prepaid, and which upon examination appears to the satisfaction of Harsco Rail to have been defective. Such free repair or replacement does not include transportation charges, or the cost of installing the new part or any other expense incident thereto. Harsco Rail will not be liable for other loss, damage, or expense directly or indirectly arising from the use of its product, nor will Harsco Rail be liable for special, incidental, or consequential damages.

Ordinary wear and tear, and damage from abuse, misuse, neglect or alteration are not covered by this warranty. Harsco Rail assumes no liability for expense incurred or repairs made outside its factories except by written consent. This warranty is null and void if instructions and operating procedures are not followed.

Equipment and parts not manufactured by Harsco Rail, but which are furnished in connection with Harsco Rail products, are covered directly by the warranty of the manufacturer supplying them. However, Harsco Rail will assist in obtaining adjustment on such equipment or parts when necessary.

THIS WARRANTY IS IN LIEU OF ALL OTHER WARRANTIES EXPRESSED OR IMPLIED INCLUDING ANY IMPLIED WARRANTIES OF MERCHANTABILITY OR FITNESS FOR A PARTICULAR PURPOSE, WHICH ARE HEREBY DISCLAIMED AND OF ANY OTHER OBLIGATION OR LIABILITY OF HARSCO RAIL. THE REMEDY SET FORTH ABOVE IS BUYER'S EXCLUSIVE REMEDY FOR A BREACH OF THE WARRANTY. UNDER NO CIRCUMSTANCES WILL HARSCO RAIL BE RESPONSIBLE FOR INCIDENTAL, CONSEQUENTIAL, SPECIAL OR OTHER INDIRECT DAMAGES.

INDEMNITY

Buyer agrees to indemnify and hold Harsco Rail harmless for all loss, cost including but not limited to legal and other cost of proceedings, and damages suffered by Buyer or claimed by third parties by or related to Buyer's use of Harsco Rail's products.

PRODUCT IMPROVEMENT LIABILITY DISCLAIMER

Harsco Rail reserves the right to make any changes in or improvements to its products without incurring any liability or obligation whatsoever and without being required to make any corresponding changes or improvements to products previously manufactured or sold.

HAZARDOUS MATERIAL DISCLAIMER

The parts/assemblies that are used in this Product are classified as "articles" according to 29 CFR 1910.1200 (C). They are formed to a specific shape or design during manufacture, have end use function dependent upon their shape or design, and do not release any hazardous chemical under normal conditions of use. Accordingly, we are not required to supply Material Safety Data Sheets (MSDS) or to label shipping containers for "articles". However, lubricants, liquids, gaseous chemicals and solids used in operation or maintenance of the product may require that user's take occupational protective measures. MSDS sheets for such materials will be supplied to your Purchasing Manager/ Safety Director to be used in your employee safety training education and environmental health training.

HARSCO RAIL
HARSCO CORPORATION
2401 Edmund Road, Box 20
Cayce-West Columbia, SC 29171-0020 U.S.A.

BULLETIN 5007763 Printed In U.S.A. ISSUED 6 - 2011
REVISION B REVISED 2 - 2012
© 2012 HARSCO CORPORATION, ALL RIGHTS RESERVED