HARSCO RAIL

www.harscorail.com

MARK IV HD J2
PRODUCTION / SWITCH TAMPER

FCM RAIL - BALFOUR BEATTY RAIL - CANDO CONTRACTING
OWS RAIL - ATLAS RAIL - RELAM RAIL
WITH CUMMINS TIER III ENGINE - HYDRAULIC DRIVE - JUPITER II

PARTS MANUAL

MARK IV HD J2 TAMPER		MARK IV HD J2 TAMPER	
SERIAL NO.	**CUSTOMER / NO.**	**SERIAL NO.**	**CUSTOMER / NO.**
7113451	FCM / BBRI	7113502	CANDO / 26974
7113462	FCM	7113512	OWS
7113472	FCM	7113562	ATLAS
7113482	FCM / BBRI	7113572	RELAM / A&B
7113492	FCM / BBRI	7113582	RELAM / PNR
7113612	FCM / FEC	7113592	RELAM / A&B
		7113602	RELAM / OWS

JUPITER On Board

ISSUED 6 - 2011
REVISED 7 - 2012

BULLETIN 5007767
REVISION C

© 2012 HARSCO CORPORATION, ALL RIGHTS RESERVED

- **THIS MANUAL CONTAINS VITAL INFORMATION FOR THE SAFE USE AND EFFICIENT OPERATION OF THIS MACHINE. CAREFULLY READ THIS MANUAL BEFORE USING THE MACHINE. FAILURE TO ADHERE TO THE INSTRUCTIONS COULD RESULT IN BODILY INJURY AND/OR PROPERTY DAMAGE.**

HARSCO RAIL is the brand name and trademark of products manufactured by Harsco Rail, Harsco Corporation.

When this manual is received, record the machine serial numbers, engine serial numbers and all other information from the serial number tags in the spaces provided for future reference, in case the serial number tags ever become unreadable.

A MANUAL MUST REMAIN WITH THE MACHINE. Additional or replacement manuals may be obtained by calling or writing Harsco Rail, Harsco Corporation.

All information, illustrations and specifications in this manual are based on the latest information available at the time of publication. Harsco Rail, Harsco Corporation reserves the right to make changes at any time without notice.

FACILITY LOCATIONS

Harsco Rail
415 North Main Street
Fairmont, MN
56031-1837
Tel: (507) 235-3361
Fax: (507) 235-7370

Harsco Rail
2401 Edmund Road, Box 20
Cayce-West Columbia, SC
29171-0020
Tel: (803) 822-9160
Fax: (803) 822-7471

Harsco Rail
200 South Jackson Road
Ludington, MI
49431
Tel: (231) 843-3431
Fax: (231) 843-1644

Harsco Rail
Giltway, Giltbrook
Nottingham, NG16 2GQ
England
Tel: 0115 938 7000
Fax: 0115 938 7001

Harsco Rail
4 Strathwyn Street, PO Box 5287
Brendale, Queensland 4500
Australia
Tel: 61 7 205 6500
Fax: 61 7 205 7369

Printed in U.S.A.

TABLE OF CONTENTS

General Arrangement 9
Instructions For Ordering Parts 10
Serial Numbers 11
Limited Warranty 12
Indemnity 12
Product Improvement Liability Disclaimer 12
Hazardous Material Disclaimer 12

CAB COMPONENTS

Cab Installation 4014795
Cab Assembly 5006705
Jump Seat Installation H6338XAA
Seat Assembly 5008334
Seat Stand C8651WAA
Foot Switch - Cycle / Travel C5363WAK
Cab Padding and Floor Mats H5975WAA
Cab Glass Installation - Clear 5006864
Cab Glass Installation - Bronze Tinted. 4018004
Cab Window Blinds Installation 5009038
Hydraulic A/C and Pressurizer Installation. D3184WAD
Repair Parts List - Hydraulic A/C and Pressurizer. G1688P
Printer Installation with Vandal Cover 4017998
Radio Converter Kit D9702XAA
Satellite Radio 5008179
Strobe Light Kit 4014768
Vandalism Screens D1530VAD
West Coast Mirrors C9433YAA

TABLE OF CONTENTS

ENGINE COMPONENTS

Engine Installation 5010117
Engine Skid Assembly 5004772
Fuel Tank Installation 5010149
Fuel Tank Assembly 5010152
Valve Assembly - Oil Cooler Fan Control G0686XAD
Fuel Filter Installation 4021237
Remote Fluid Drains G2454WAA

DRIVE TRAIN COMPONENTS

Front Axle Installation 5006913
Front Axle Assembly 5004726
Drive Axle Sub-Assembly - Front and Rear 2019160
Drive Axle Assembly - Front and Rear 2019159
Cylinder Assembly - Front Pivot Lockout 340311-1
Rear Axle Installation 5006979
Drive and Brake Assembly 5004769
Drive Axle Sub-Assembly - Front and Rear 2019160
Drive Axle Assembly - Front and Rear 2019159
Brake Arm Weld 330871-1
Brake Arm Assembly 330872-1
Cylinder Assembly - Rear Suspension Lockout 330840-1
Bumper Installation D2781WAA
Insulation Bypass Installation - Front and Rear 4031757
Remote Grease Fitting Installation - Front Only 4031112

TABLE OF CONTENTS

TAMPING COMPONENTS

Workhead and Traverse Assembly 4029012
Traverse Idler A4887XAA
Vibrator and Workhead Assembly - Right 5007870
Vibrator and Workhead Assembly - Left 5007871
Pivot Pin Assembly. 5007907
Slide Assembly - Rear G0851YAA
Slide Assembly - Front G0852YAA
Vibrator Assembly C0607VAA
Vibrator Housing Assembly. 0-2200082-0-01
Vibrator Fork Link Assembly X688056
String Pot 0-3137013-0-14
Swivel Bracket Assembly Y684448-01
Stop Pad Assembly G0850YAA
Cylinder Assembly - Workhead Lift B5761XAA
Cylinder Assembly - Workhead Squeeze X68297
Cylinder Assembly - Workhead Squeeze Concrete Option X768362A
Auto Oiler Kit - Replaces B4750XAD. 5020484
Tamping Tools Kit - BTI Tool P753281H
Tamping Tools Kit - Tough Tool P753281Y
Tie Finder Kit 5008147
Tie Finder Kit 4018071
Auto Tie Finder Box Assembly 4016560
Antenna Assembly 4012592
Tie Marker Kit. 5008098
Workhead Grease Kit. 4014782
Workhead Safety Support Installation 4015058

TABLE OF CONTENTS

JACKING COMPONENTS

Combo Clamp Installation - Insulated A7609WAJ
Cylinder Assembly - Jack with Lock B5715XAE
Cylinder Assembly - Jack without Lock. B5715XAD
Cylinder Assembly - Slew. B7036WAC
Combo Clamp Frame Assembly - Insulated G8585VAD
Roller Assembly 0-2305761-0-01
Roller Assembly A1681YAA
Biasing Pad Assembly A7660YAA
Cylinder Assembly - Bias B5705XAB
Cylinder Assembly - Liner. B5705XAF
Cylinder Assembly - Hook B5708XAA

LINING COMPONENTS

Shadowboard Assembly and Installation 4021904
Base and Wheels Assembly. 4021700
Wheel Assembly - Right A0219WAA
Wheel Assembly - Left A0219WAB
Gimbel Assembly 0-2303638-0-03
Liner Flag Arm Assembly - Right A0978WAE
Liner Flag Arm Assembly - Left A0978WAF
Linear Actuator Assembly C0046XAC
Electric Actuator Repair Parts B8409X02
Cylinder Assembly - Bias 0-2303635-0-06
Light Shields Installation A7762WAC
Encoder Wheel Installation G9426WAG
Carriage and Wheel Assembly. G9427WAG
Cylinder Assembly - Encoder A1901YAA
Dual Reference Addition - with Laser Alignment H6410WAD
Dual Reference Addition - with Standard Liner H6410WAE
Projector Assembly. 0-2100861-0-09
Projector Assembly Schematic 0-1203294-0-01
Projector Set-Up A3406Y01
Wiring Diagram A6118X01
Double Barrel Receiver 4007012
Projector Air Bias Kit. C9396WAA
Laser Liner Kit A1810VAK
Laser Rail Alignment System 0-2407897-0-06
Bias Wheel Assembly. 0-2302071-0-04
Line-Lite Wire Installation. G2300XAB

TABLE OF CONTENTS

SURFACING COMPONENTS

Receiver Buggy Installation 4009810
Base and Wheels Assembly. 4021700
Wheel Assembly - Right A0219WAA
Wheel Assembly - Left A0219WAB
Double Barrel Receiver Assembly 4007012
Linear Actuator Assembly. D4713XAB
Linear Actuator Assembly C0046XAC
Electric Actuator Repair Parts B8409X02
Buggy Lift System H5953VAA
Cylinder Assembly - Buggy Lift. G7733YAA
Valve Assembly - Buggy Lift C7417XAA
Buggy and Spacer Bar Assembly G7897WAK
Projector Buggy Assembly G0109VAS
Wheel Assembly - Insulated 0-2201452-0-01
Projector Assembly 0-2100861-0-09
Projector Assembly Schematic 0-1203294-0-01
Projector Set-Up A3406Y01
Wiring Diagram A6118X01
Projector Assembly 0-2100861-0-10
Distribution J Box 5009441
Projector Support Channel Assembly 0-2100917-0-15
Bias Wheel Assembly 0-2302071-0-04
Pusher Buggy Assembly A6762WAA
Pusher Buggy Assembly A6762WAB
Wheel Assembly - Insulated 0-2201452-0-01
Pusher Bar Assembly A6830WAA
Recorder Buggy A8687WAB
Wheel Assembly - Insulated 0-2201452-0-01

TABLE OF CONTENTS

PNEUMATIC COMPONENTS

Pneumatic Schematic 5004651
Pneumatic Components. 5004648
Valve Assembly - Front Shifter C7781XAA
Valve Assembly - Index Brake C7786XAA
Valve Assembly - Shadowboard. C7788XAA
Air Auto Blow Down Kit C9416YAA
Air De-Icer Installation 4021224
Air Pressure Test Unit B5370XAD
Air Tool Supply Kit D2708XAA
Brake Pressure Transducer Kit 5007803
Brake System Release G1522XAA
Emergency Towing Kit 4021084
Line-Lite Air Components G2451WAA
Air Dryer and Purge Tank Repair Parts . . . . . _____
Air Filters Repair Parts. . . . . _____

TABLE OF CONTENTS

HYDRAULIC COMPONENTS

Hydraulic Schematic 5004442
Hydraulic Interconnect 5004704
Valve Assembly - Jack Regen C9087VAA
Valve Assembly - Traction Front and Rear C9095WAH
Valve Assembly - Workhead C9101VAA
Valve Assembly - Workhead Traverse C9102WAA
Valve Assembly - Liner & Clamp C9104VAB
Valve Assembly - Bias & Clamp C9112VAC
Valve Assembly - Vibrator Relief - Left 4011662
Valve Assembly - Vibrator Relief - Right 4011663
Valve Assembly - Decel 4011685
Valve Assembly - Squeeze Relief 4011686
Valve Kit - L&H 5004628
Valve Kit - FTI 5004762
Fitting Kit 5004764
Hose Kit 4016555
Hose Kit 5009363
Hydraulic Tank Installation 5004588
Hydraulic Tank Assembly 5004450
DC Emergency Pump Kit C8563WAB
Fluid Sampling Kit D6054YAA
High Pressure Filter Kit C9365WAH
HP Filter Hose Kit H2353W04
Hydraulic Tank Gauges Cover D3817WAA
Remote Filtration System H6403WAA
Remote Fluid Drains G2454WAA
SST Top Fill Tube / Case G2045XAA
Top-Up Pump System - Electric 5007828
Valve Cover Kit D4481WAB
Hydraulic Pumps / Motors Repair Parts . . . . . _____
Hydraulic Filters Repair Parts . . . . . _____
Hydraulic Cylinders Repair Parts . . . . . _____
Hydraulic Valves Repair Parts . . . . . _____

TABLE OF CONTENTS

ELECTRICAL COMPONENTS

Electrical Schematic. 5007950
Interconnect Wiring 5007958
PDB Assembly (Power Distribution Box) 5007952
Manual Pump Box Assembly H6204YAA
Cab Wiring 5007957
MCB Assembly (Main Control Box) 5007951
ECP Assembly (Engine Control Panel) 5007953
Armrest Assembly - Left 5007954
Keypad Assembly - Left 5009076
Armrest Assembly - Right. 5007955
Keypad Assembly - Right H1826WAB
Jupiter System Installation 5007956
Cabinet Light Kit. 5007874
Perimeter Lights Kit 5010288
Light Junction Box 4020601
Laser Battery Charger D1139WAD

MISCELLANEOUS

Logo Installation. H1270WAG
Logo Installation. 5010237
Fluid Fill Guide. 5008518
Removable Vise Installation. H4851WAA
Miscellaneous Components Parts List. . . . . _____

GENERAL ARRANGEMENT

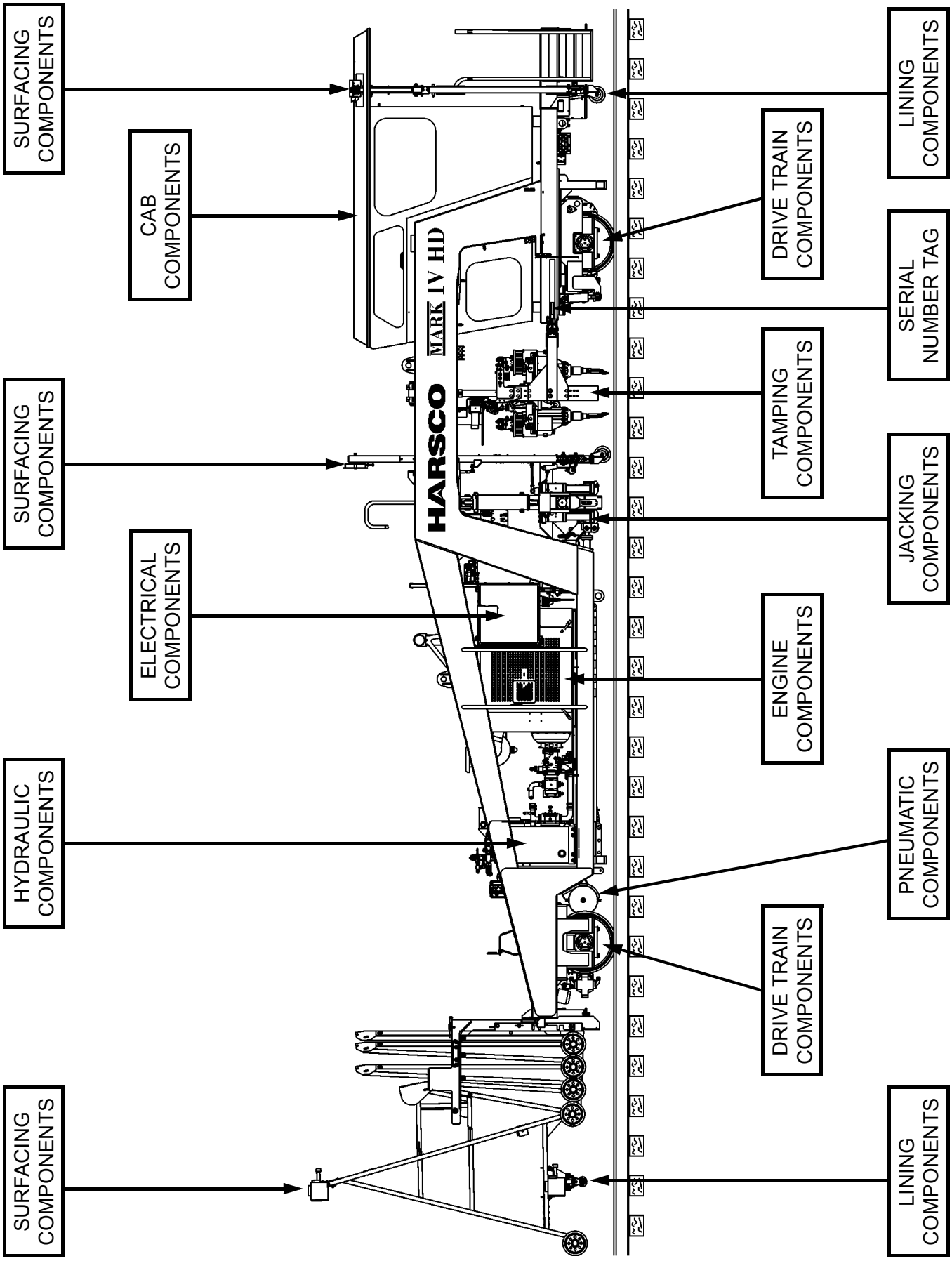

INSTRUCTIONS FOR ORDERING PARTS

Front / rear and left / right are determined from the operator's seat in the cab. The lining / surfacing buggy is located on the front of the machine and the cab / operator's seat is located on the rear of the machine. The jacking / tamping components are located on both the left and right sides of the machine.

Assemblies: When assemblies can be used, always order them to save work of fitting separate parts.

For convenience in ordering, parts are listed by item number, part number, description, and quantity in each assembly or group. If in doubt as to any part wanted, send a full description, sketch, or send the old part with the order.

To insure prompt and correct shipment of parts on orders, always give:

1. Quantity of each part wanted.
2. Part number of each part as shown in this book. Include any prefix and suffix letters.
3. Description of each part as shown in this book.
4. Factory serial numbers from the serial number tag on the machine.
5. Purchase order number (if required).
6. Preferred method of shipment.

All parts are shipped F.O.B. factory, transportation charges to be paid by customer. Terms to be determined by the Credit Department.

SERIAL NUMBERS

Serial Number - Machine

Record the serial number and all other information from the serial number tag on the machine in the spaces provided in Figure 1. Always provide the serial number when calling or writing the factory about the machine. The serial number tag is located on the left side of the machine frame above the left rear drive wheel on the cab.

Spaces marked "Model No." - "Serial No." and "Chassis No." will always have numbers and/or letters shown.

FIGURE 1
MACHINE SERIAL NUMBER TAG

Serial Number - Engine

Record the serial number of the engine in the spaces provided below. The engine serial number tag is located on the engine. See the Engine Manual for the location of the serial number tag.

Engine Manufacturer: "_____"

Engine Model Number: "_____"

Engine Serial Number: "_____"

LIMITED WARRANTY

Harsco Rail warrants products of its manufacture to be free of defects in material and workmanship, under normal use and service for a period of six (6) months from date of delivery to the original user. The obligation of Harsco Rail under this warranty is limited to repairing or replacing at its factories, or other location designated by it, any part or parts thereof which are returned within 30 days of the date when failure occurs or defect is noted, with transportation charges prepaid, and which upon examination appears to the satisfaction of Harsco Rail to have been defective. Such free repair or replacement does not include transportation charges, or the cost of installing the new part or any other expense incident thereto. Harsco Rail will not be liable for other loss, damage, or expense directly or indirectly arising from the use of its product, nor will Harsco Rail be liable for special, incidental, or consequential damages.

Ordinary wear and tear, and damage from abuse, misuse, neglect or alteration are not covered by this warranty. Harsco Rail assumes no liability for expense incurred or repairs made outside its factories except by written consent. This warranty is null and void if instructions and operating procedures are not followed.

Equipment and parts not manufactured by Harsco Rail, but which are furnished in connection with Harsco Rail products, are covered directly by the warranty of the manufacturer supplying them. However, Harsco Rail will assist in obtaining adjustment on such equipment or parts when necessary.

THIS WARRANTY IS IN LIEU OF ALL OTHER WARRANTIES EXPRESSED OR IMPLIED INCLUDING ANY IMPLIED WARRANTIES OF MERCHANTABILITY OR FITNESS FOR A PARTICULAR PURPOSE, WHICH ARE HEREBY DISCLAIMED AND OF ANY OTHER OBLIGATION OR LIABILITY OF HARSCO RAIL. THE REMEDY SET FORTH ABOVE IS BUYER'S EXCLUSIVE REMEDY FOR A BREACH OF THE WARRANTY. UNDER NO CIRCUMSTANCES WILL HARSCO RAIL BE RESPONSIBLE FOR INCIDENTAL, CONSEQUENTIAL, SPECIAL OR OTHER INDIRECT DAMAGES.

INDEMNITY

Buyer agrees to indemnify and hold Harsco Rail harmless for all loss, cost including but not limited to legal and other cost of proceedings, and damages suffered by Buyer or claimed by third parties by or related to Buyer's use of Harsco Rail's products.

PRODUCT IMPROVEMENT LIABILITY DISCLAIMER

Harsco Rail reserves the right to make any changes in or improvements to its products without incurring any liability or obligation whatsoever and without being required to make any corresponding changes or improvements to products previously manufactured or sold.

HAZARDOUS MATERIAL DISCLAIMER

The parts/assemblies that are used in this Product are classified as "articles" according to 29 CFR 1910.1200 (C). They are formed to a specific shape or design during manufacture, have end use function dependent upon their shape or design, and do not release any hazardous chemical under normal conditions of use. Accordingly, we are not required to supply Material Safety Data Sheets (MSDS) or to label shipping containers for "articles". However, lubricants, liquids, gaseous chemicals and solids used in operation or maintenance of the product may require that user's take occupational protective measures. MSDS sheets for such materials will be supplied to your Purchasing Manager/ Safety Director to be used in your employee safety training education and environmental health training.

CAB COMPONENTS

Item Number	Document Number	Title	Quantity
1	A0036224	3/4-10 X 3 1/2 HHCS	4
2	0-3643005-0-01_7	SHOCK MOUNT	4
3	TY780009-052	WASHER, .81 I.D. X 3.5 O.D.	4
4	L40931	LOCKNUT, 3/4-10, HEAVY THIN	4

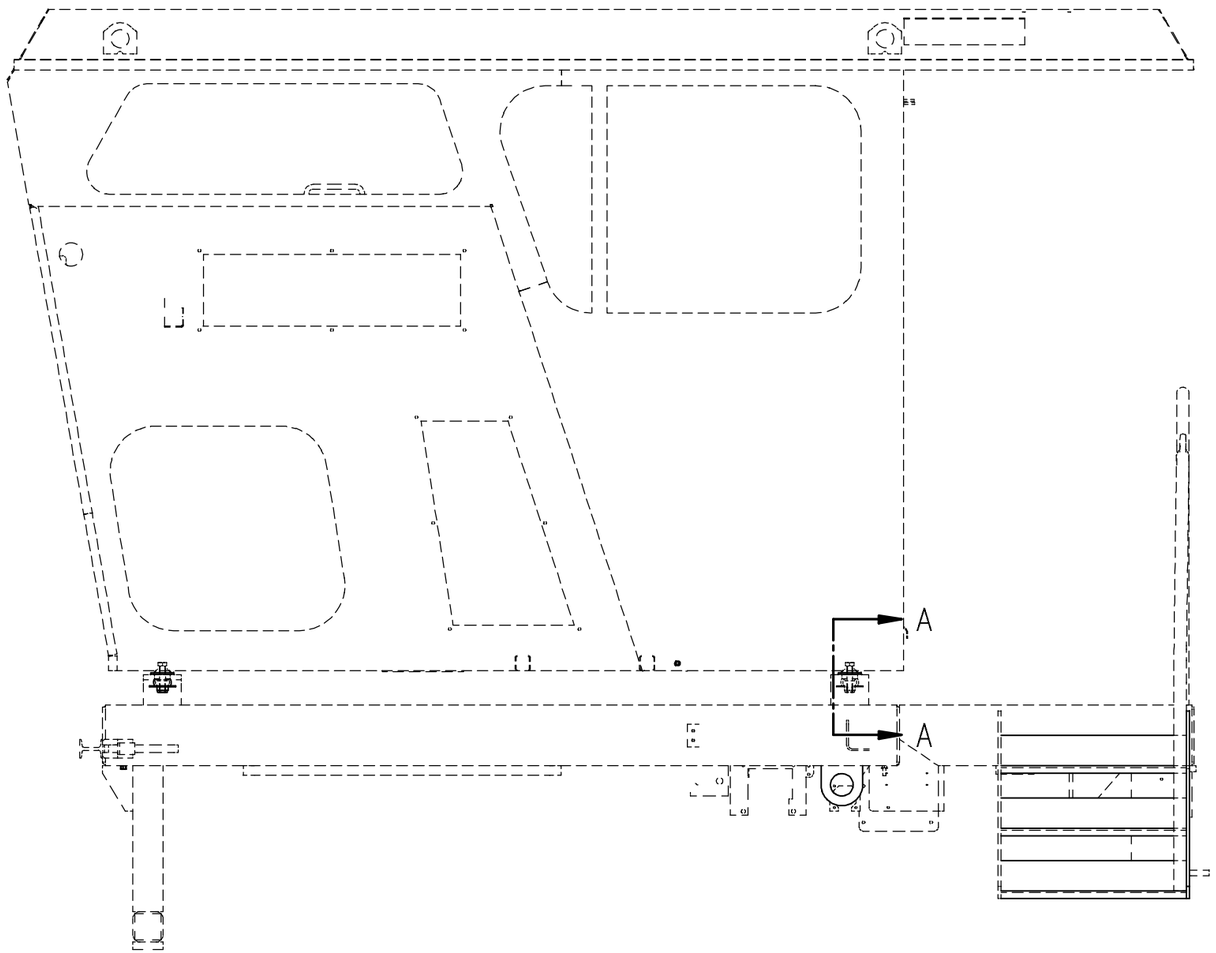

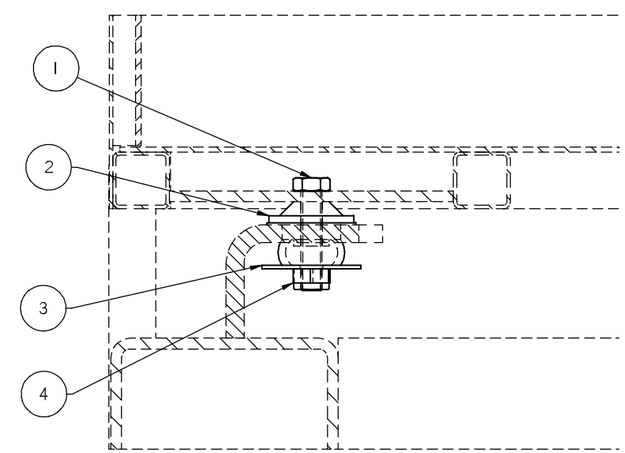

SECTION A-A

SOLID EDGE DRAWING

CONFIDENTIAL
© COPYRIGHT 2001 HARSCO TRACK TECHNOLOGIES. THIS DRAWING OR DOCUMENT IS THE PROPERTY OF HARSCO TRACK TECHNOLOGIES AND EMBODIES CONFIDENTIAL INFORMATION, TRADE SECRET INFORMATION, AND/OR KNOW-HOW THAT IS THE PROPERTY OF HARSCO TRACK TECHNOLOGIES. BY ACCEPTING THIS DRAWING OR DOCUMENT, THE RECIPIENT AGREES (1) NOT TO PROVIDE, OR OTHERWISE MAKE AVAILABLE, THE DRAWING OR DOCUMENT, OR ANY INFORMATION OR KNOW-HOW EMBODIED THEREIN, TO ANY THIRD PARTY AND (2) NOT TO REPRODUCE OR USE THE DRAWING OR DOCUMENT TO MANUFACTURE ANY APPARATUS OR DEVICE, WITHOUT THE PRIOR WRITTEN AUTHORIZATION OF HARSCO TRACK TECHNOLOGIES.

IMPLIED TOLERANCES
ALL DIMENSIONS ARE IN INCHES - TOLERANCE UNLESS OTHERWISE SPECIFIED

NOMINAL SIZE RANGE OVER	TO	INCH PLUS OR MINUS 2 PLACE DECIMAL	3 PLACE DECIMAL	NOMINAL SIZE RANGE OVER	TO	METRIC PLUS OR MINUS 1 PLACE DECIMAL	2 PLACE DECIMAL
0	6	.03	.005	0	150	.8	.13
6	24	.04	.008	150	600	1.0	.20
24	-	.06	.010	-	600	1.5	.25

UNLESS OTHERWISE SPECIFIED ALL MACHINED SURFACES WILL HAVE
A SURFACE FINISH OF 125 MICRONCHES
ANGULAR TOLERANCE OF +-.20°
CONCENTRICITY WITHIN .010

THIRD ANGLE PROJECTION

UNLESS OTHERWISE SPECIFIED ALL WELDS SHOULD ADHERE TO THE LATEST HTT WELDING SPECIFICATION 101

CHANGE	R/L	REVISION	DATE
101283	A	RELEASE	8-30-07
105645	B	ITEM 1 WAS A0036223	5-21-10

Description: CAB INSTALLATION
Drawing Number: ---------- ---------- ----------
Machine Type: CAB INSTALLATION
Model: 4014795.asm
Weight: 0.0 lbm
Scale: 1:10
Drawn: hwiggins 8-30-07
Dwg Chkd: JBR
Dwg Appvd: JBR
Chkd: JBR
Mat'l: ------ ------

HTT
Harsco Track Technologies
Harsco
Columbia, SC

Part Number: 4014795
Size: D
Sheet: 1 of 1

Plotted by hwiggins on 9/9/2010 4014795.dft

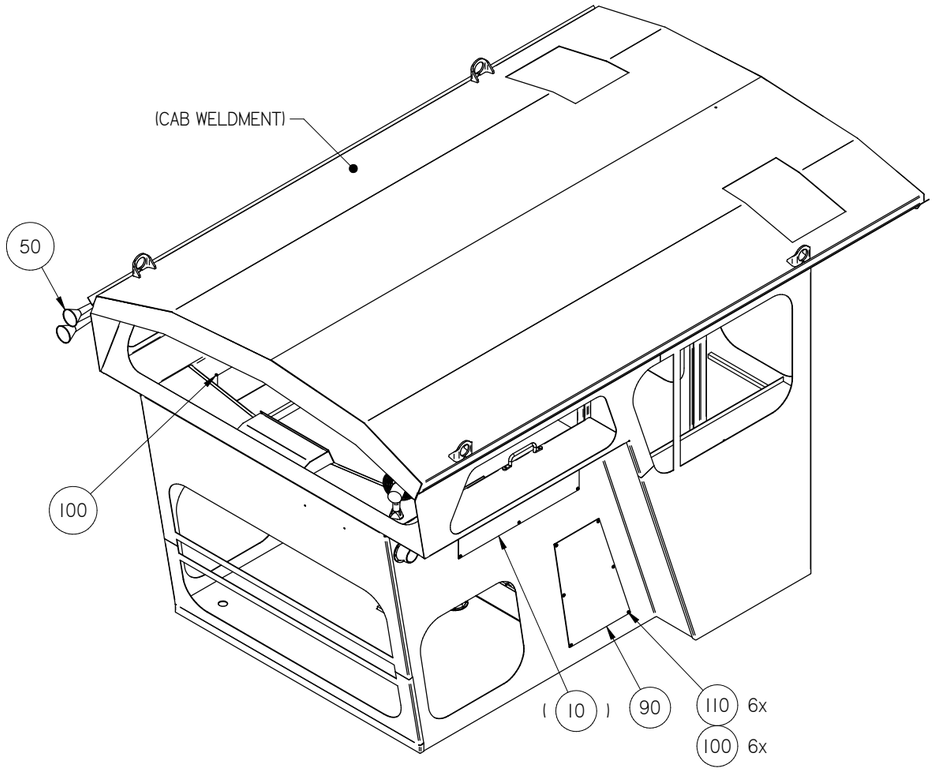

ITEM	PART NO	QTY	DESCRIPTION
210	F010502	8	DC-RD HD MS #10-24X1/2 ZP
220	F009591	4	RD HD MS #10-24X3/4 ZP
230	A0055039	4	10-24 HEX NUT CAD PL USE
240	0-1405820-0-01	5	TRIM MOLDING (FT)
250	H6320Y01	2	NON LOCKING LATCH LEVER
260	4011036	1	KEYBOARD STAND
270	A1563Y11	1	THREADED INSERTS
280	H6240X01	1	MCB DOOR KEEPER
290	B5532Y08	3	10-24 X 1/2"SCREW/WASHER
300	F018029K	3	#10-24 ELASTIC STOP NUT
310	F002887	1	DC-HHD CAP SCR3/8-16X3/4GR5
320	0-3018011-0-01	1	PADDLE HANDLE LOCK
330	H6338XAA	1	JUMP SEAT INSTALLATION

ITEM	PART NO	QTY	DESCRIPTION
10	4011876	2	COVER, ACCESS
20	5006704	1	DOOR LATCH/LOCKSET
30	L422086	1	DRAWER HANDLE
40	H5890Y01	2	ACCESS COVER PLATE
50	Z780309Z	1	AIR HORN
60	A0036005	3	1/4-20 X1 HHCAPSCREW USE
70	F004606	3	DC-1/4-20 ELASTIC STOP NUT
80	D2290Y01	2	CABLE BOOT
90	4011877	1	COVER, LOWER ACCESS
100	A1563Y07	18	INSERT THREADED
110	B5532Y11	18	SCREW W/WASHER
120	0-3044006-0-03	29	TRIM SEAL
130	F007413	8	LOCK WASHER #6
140	F009718	8	DC-RD HD MS #6-32X1/2 ZP
150	G6468Y01	2	T HANDLE LATCH
160	0-3202000-0-19	2	HOSE CLAMP
170	F013588	2	DC-1/4-20 ELAS STP NUT
180	H1958X03	1	MCB DOOR
190	D2291Y01	2	BOOT RING
200	F025837	8	LOCK WASHER

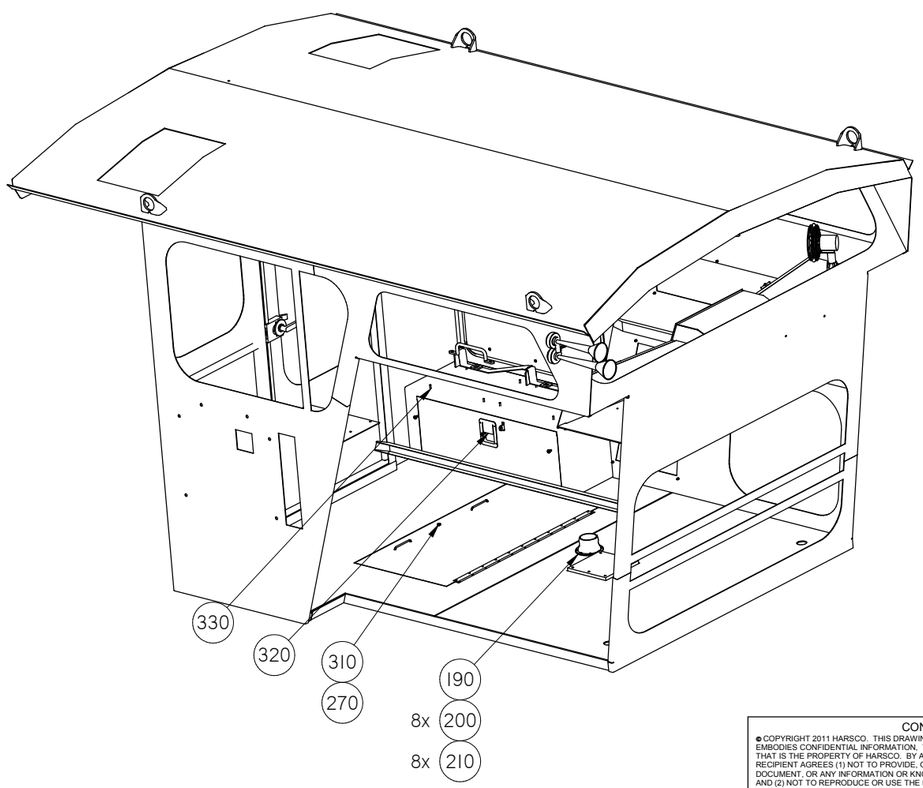

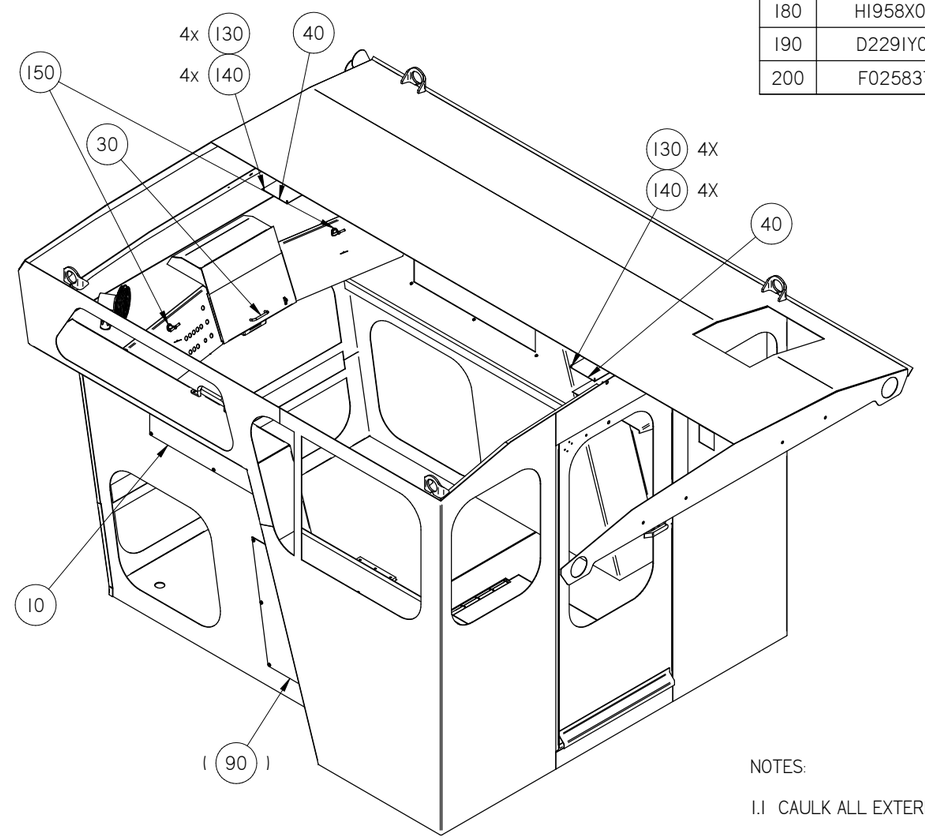

NOTES:

1.1 CAULK ALL EXTERIOR SEAMS WITH PAINTABLE CAULK (G8120Y01).

Inch
[mm]

CONFIDENTIAL
© COPYRIGHT 2011 HARSCO. THIS DRAWING OR DOCUMENT IS THE PROPERTY OF HARSCO AND EMBODIES CONFIDENTIAL INFORMATION, TRADE SECRET INFORMATION, AND/OR KNOW-HOW THAT IS THE PROPERTY OF HARSCO. BY ACCEPTING THIS DRAWING OR DOCUMENT, THE RECIPIENT AGREES (1) NOT TO PROVIDE, OR OTHERWISE MAKE AVAILABLE, THE DRAWING OR DOCUMENT, OR ANY INFORMATION OR KNOW-HOW EMBODIED THEREIN, TO ANY THIRD PARTY AND (2) NOT TO REPRODUCE OR USE THE DRAWING OR DOCUMENT TO MANUFACTURE ANY APPARATUS OR DEVICE, WITHOUT THE PRIOR WRITTEN AUTHORIZATION OF HARSCO.

NOMINAL SIZE RANGE		INCH PLUS OR MINUS	
OVER	TO	2 PLACE DECIMAL	3 PLACE DECIMAL
0	6	.03	.005
6	24	.04	.008
24	-	.06	.010

NOMINAL SIZE RANGE		METRIC PLUS OR MINUS	
OVER	TO	1 PLACE DECIMAL	2 PLACE DECIMAL
0	150	.8	.13
150	600	1.0	.20
600	-	1.5	.25

UNLESS OTHERWISE SPECIFIED ALL MACHINED SURFACES WILL HAVE;
A SURFACE FINISH OF 125 MICROINCHES
ANGULAR TOLERANCE OF +/- 50'
CONCENTRICITY WITHIN .010

THIRD ANGLE PROJECTION

UNLESS OTHERWISE SPECIFIED, ALL WELDS SHOULD ADHERE TO THE MOST CURRENT A.W.S WELDING STANDARDS

CHANGE	R/L	REVISION	DR	DATE
EC500725	A	NEW RELEASE	SRK	03-10-11
EC501638	B	ADDED ITEMS 320 & 330	HW	08-26-11
EC502851	C	ADDED VIEWS G-G, H & I FOR CLARITY, CORRECTED A-A	CJW	02-08-12

Description: CAB ASSEMBLY

HARSCO RAIL

Material: -; -
Machine Type: MARK IV
Size: D
Weight: 2492.6 lbm
Drawn: skumar
Date Drawn: 2/3/2012
Part Number: 5006705
Sheet: 1 of 3

SOLID EDGE DRAWING
DO NOT SCALE

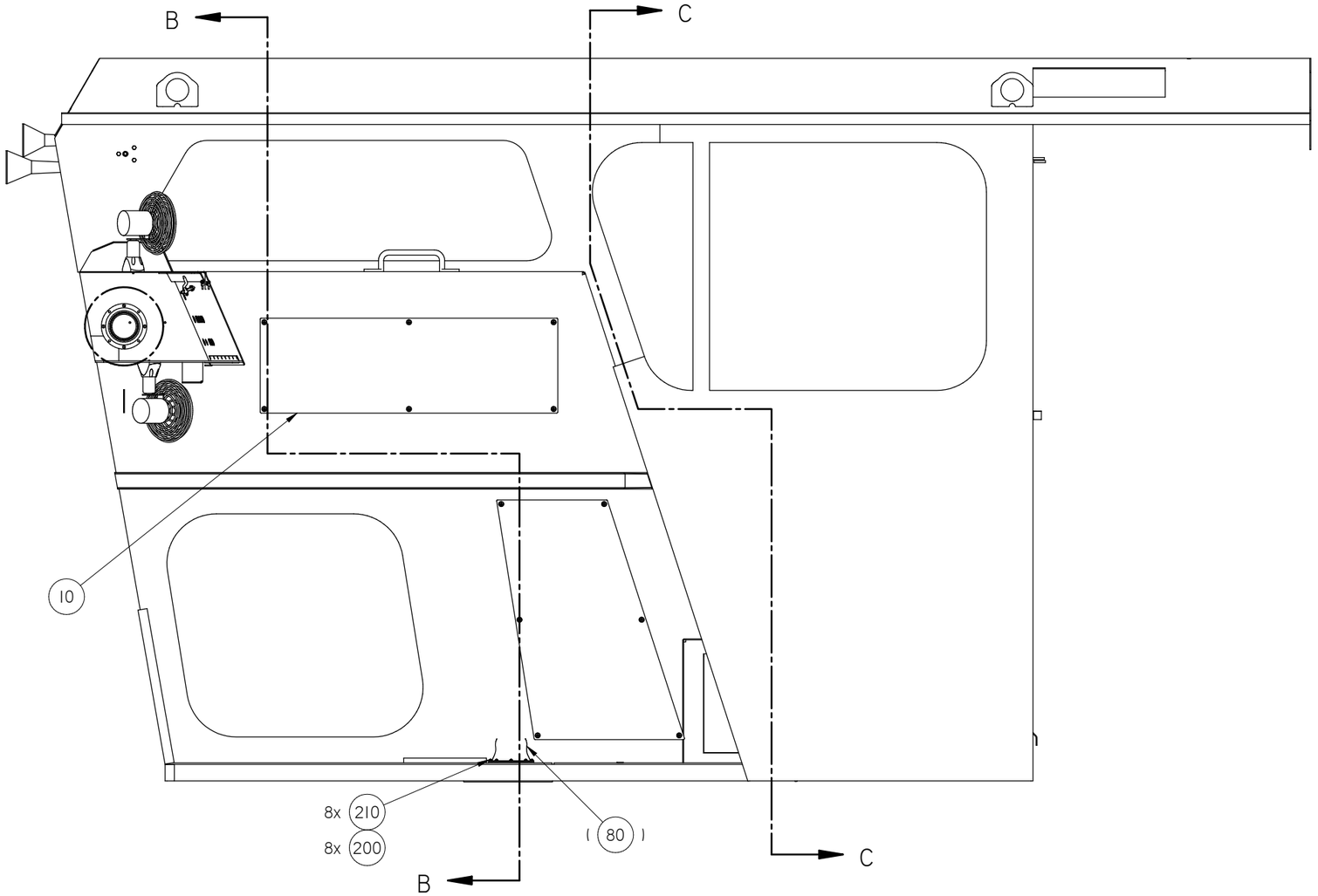

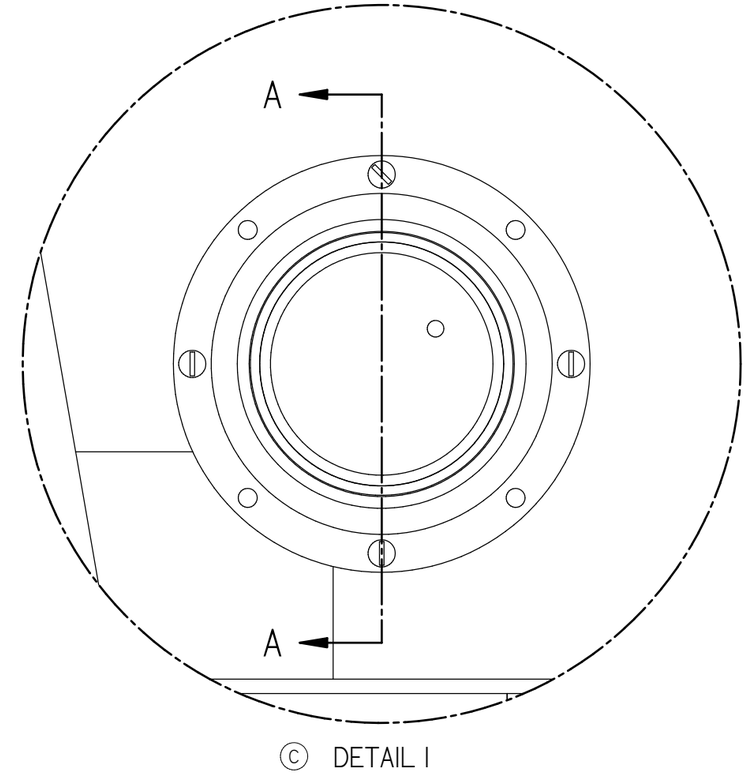

(C) DETAIL I

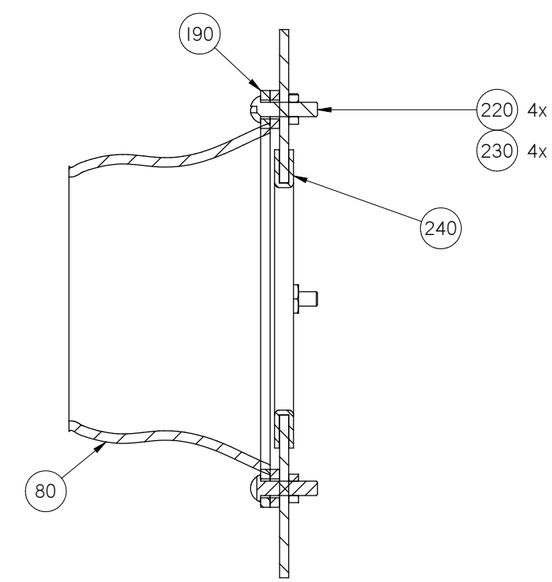

(C) SECTION A-A

Inch
[mm]

CONFIDENTIAL
© COPYRIGHT 2011 HARSCO. THIS DRAWING OR DOCUMENT IS THE PROPERTY OF HARSCO AND EMBODIES CONFIDENTIAL INFORMATION, TRADE SECRET INFORMATION, AND/OR KNOW-HOW THAT IS THE PROPERTY OF HARSCO. BY ACCEPTING THIS DRAWING OR DOCUMENT, THE RECIPIENT AGREES (1) NOT TO PROVIDE, OR OTHERWISE MAKE AVAILABLE, THE DRAWING OR DOCUMENT, OR ANY INFORMATION OR KNOW-HOW EMBODIED THEREIN, TO ANY THIRD PARTY AND (2) NOT TO REPRODUCE OR USE THE DRAWING OR DOCUMENT TO MANUFACTURE ANY APPARATUS OR DEVICE, WITHOUT THE PRIOR WRITTEN AUTHORIZATION OF HARSCO.

NOMINAL SIZE RANGE		INCH PLUS OR MINUS	
OVER	TO	2 PLACE DECIMAL	3 PLACE DECIMAL
0	6	.03	.005
6	24	.04	.008
24	-	.06	.010

NOMINAL SIZE RANGE		METRIC PLUS OR MINUS	
OVER	TO	1 PLACE DECIMAL	2 PLACE DECIMAL
0	150	.8	.13
150	600	1.0	.20
600	-	1.5	.25

UNLESS OTHERWISE SPECIFIED ALL MACHINED SURFACES WILL HAVE:
A SURFACE FINISH OF 125 MICROINCHES
ANGULAR TOLERANCE OF ± .50°
CONCENTRICITY WITHIN .010

THIRD ANGLE PROJECTION

UNLESS OTHERWISE SPECIFIED, ALL WELDS SHOULD ADHERE TO THE MOST CURRENT A.W.S WELDING STANDARDS

CHANGE	R/L	REVISION	DR	DATE
EC500725	A	NEW RELEASE	SRK	03-10-11
EC501638	B	ADDED ITEMS 320 & 330	HW	08-26-11
EC502851	C	ADDED VIEWS G-G, H & I FOR CLARITY, CORRECTED A-A	CJW	02-08-12

Description: CAB ASSEMBLY

HARSCO RAIL

Material: -; -

Machine Type: MARK IV

Size: D

Weight: 2492.6 lbm

Drawn: skumar

Date Drawn: 2/3/2012

Part Number: 5006705

Sheet: 2 of 3

SOLID EDGE DRAWING

DO NOT SCALE

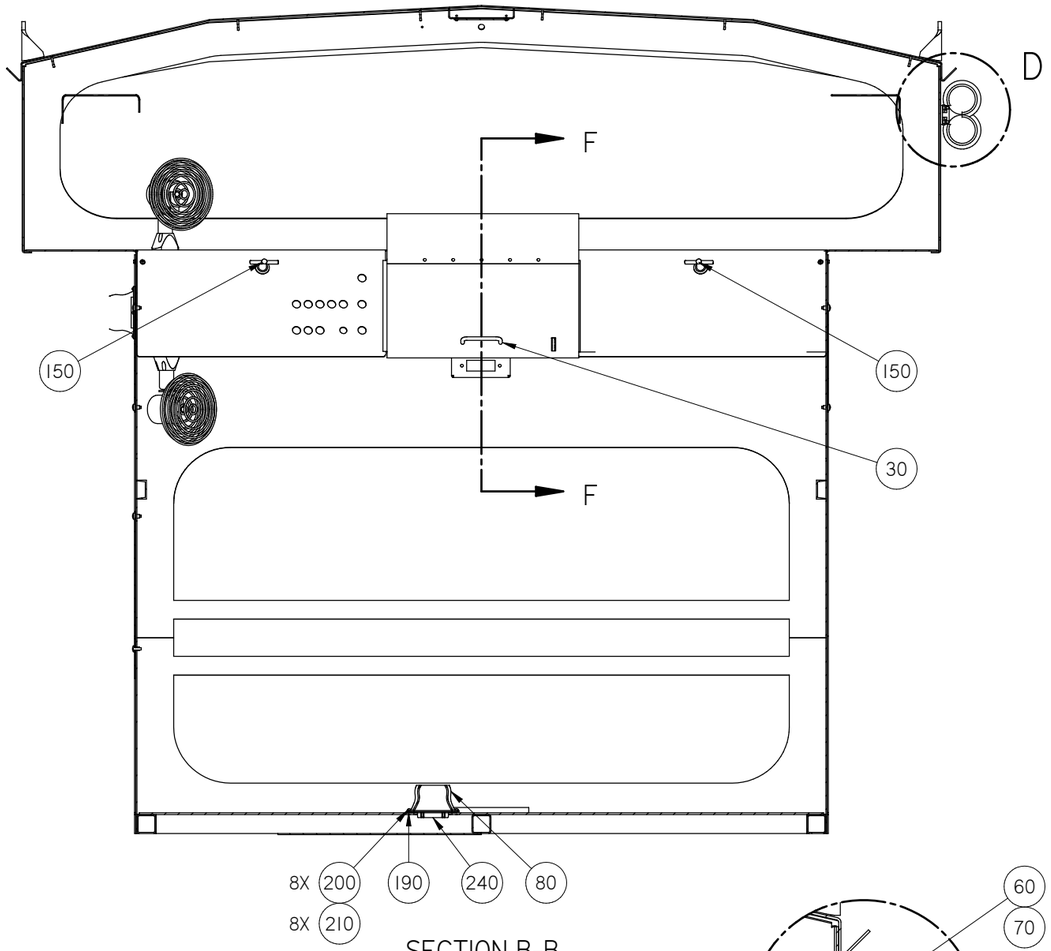

SECTION B-B

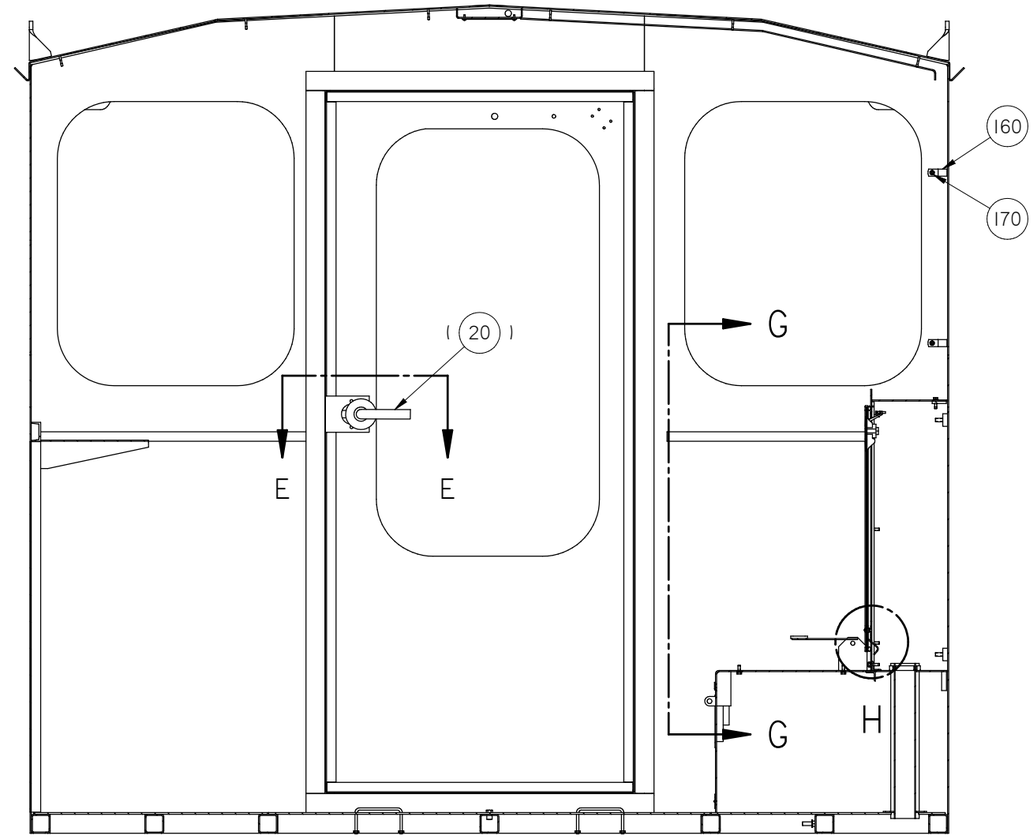

SECTION C-C

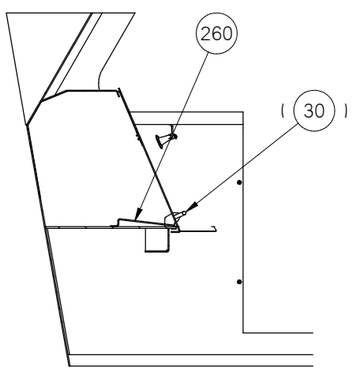

SECTION F-F

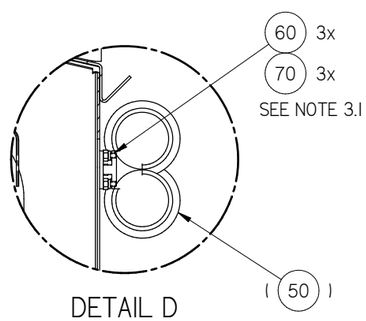

DETAIL D

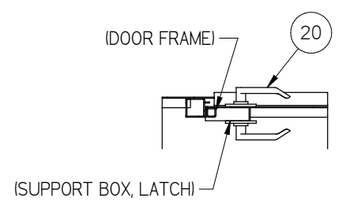

SECTION E-E

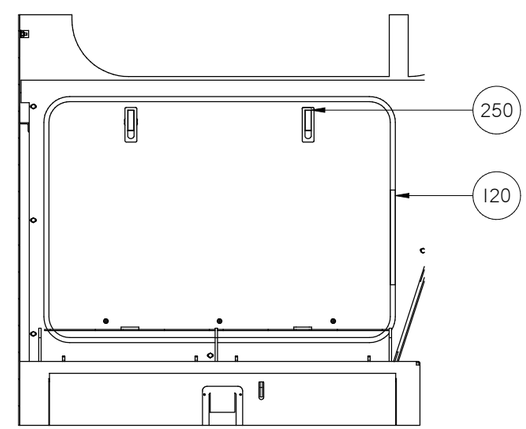

© SECTION G-G

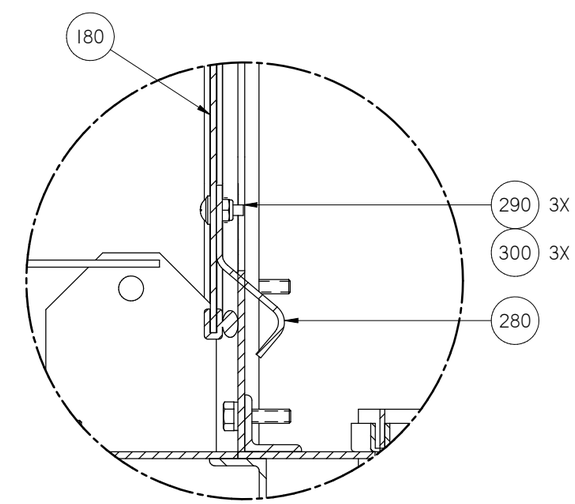

© DETAIL H

Inch
[mm]

NOTES:

3.I. ASSEMBLE THE ITEM AIR HORN HOLES TO THE RIGHT TOP CAB SIDE OF THE CAB WELDMENT

CONFIDENTIAL
© COPYRIGHT 2011 HARSCO. THIS DRAWING OR DOCUMENT IS THE PROPERTY OF HARSCO AND EMBODIES CONFIDENTIAL INFORMATION, TRADE SECRET INFORMATION, AND/OR KNOW-HOW THAT IS THE PROPERTY OF HARSCO. BY ACCEPTING THIS DRAWING OR DOCUMENT, THE RECIPIENT AGREES (1) NOT TO PROVIDE, OR OTHERWISE MAKE AVAILABLE, THE DRAWING OR DOCUMENT, OR ANY INFORMATION OR KNOW-HOW EMBODIED THEREIN, TO ANY THIRD PARTY AND (2) NOT TO REPRODUCE OR USE THE DRAWING OR DOCUMENT TO MANUFACTURE ANY APPARATUS OR DEVICE, WITHOUT THE PRIOR WRITTEN AUTHORIZATION OF HARSCO.

NOMINAL SIZE RANGE		INCH PLUS OR MINUS	
OVER	TO	2 PLACE DECIMAL	3 PLACE DECIMAL
0	6	.03	.005
6	24	.04	.008
24	-	.06	.010

NOMINAL SIZE RANGE		METRIC PLUS OR MINUS	
OVER	TO	1 PLACE DECIMAL	2 PLACE DECIMAL
0	150	.8	.13
150	600	1.0	.20
600	-	1.5	.25

UNLESS OTHERWISE SPECIFIED ALL MACHINED SURFACES WILL HAVE:
A SURFACE FINISH OF 125 MICROINCHES
ANGULAR TOLERANCE OF ± .50°
CONCENTRICITY WITHIN .010

THIRD ANGLE PROJECTION

UNLESS OTHERWISE SPECIFIED, ALL WELDS SHOULD ADHERE TO THE MOST CURRENT A.W.S WELDING STANDARDS

CHANGE	R/L	REVISION	DR	DATE
EC500725	A	NEW RELEASE	SRK	03-10-11
EC501638	B	ADDED ITEMS 320 & 330	HW	08-26-11
EC502851	C	ADDED VIEWS G-G, H & I FOR CLARITY, CORRECTED A-A	CJW	02-08-12

Description: CAB ASSEMBLY

HARSCO RAIL

Material: -; -
Machine Type: MARK IV
Size: D
Weight: 2492.6 lbm
Drawn: skumar
Date Drawn: 2/3/2012
Part Number: 5006705
Sheet: 3 of 3

SOLID EDGE DRAWING
DO NOT SCALE

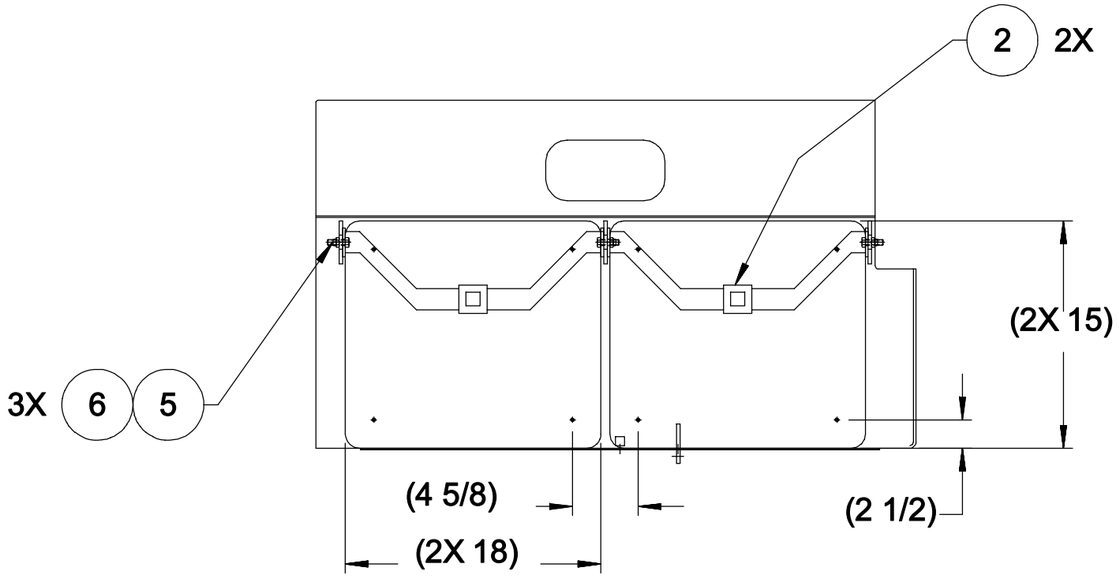

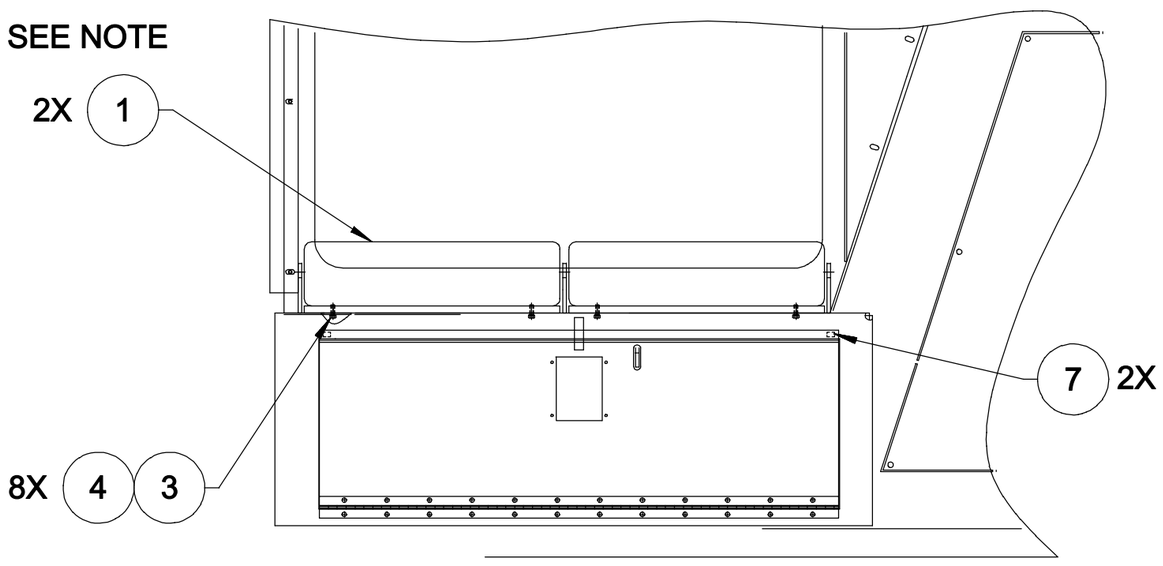

INSIDE CAB LH WALL

BOTTOM OF SEAT CUSHION

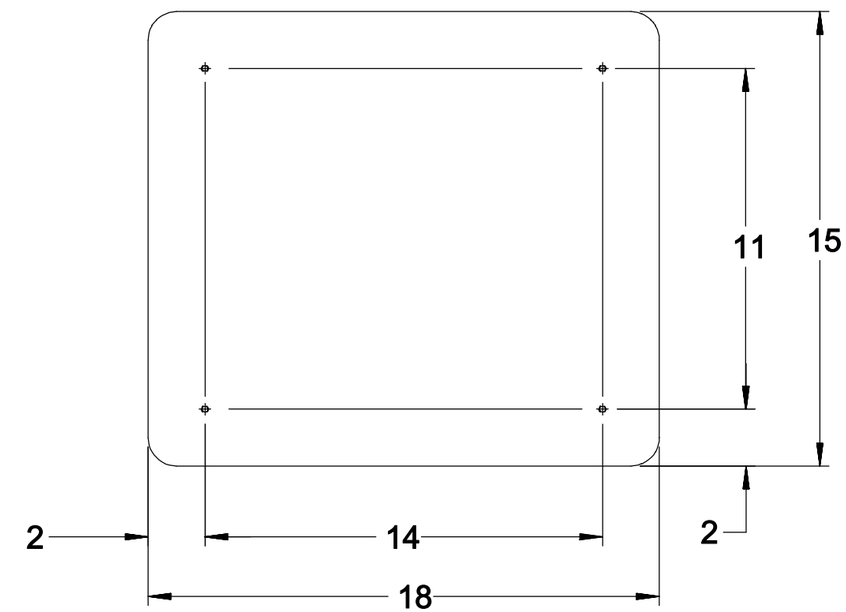

NOTE:

USE SEAT AS A GUIDE TO DRILL 8 Ø.281 HOLES IN TOP OF TOOL BOX.

ITEM	PART NUMBER	DESCRIPTION	QTY
1	0-1304868-0-02	SEAT CUSHION	2
2	0-3502045-0-01	SEAT BELT	2
3	A0036003	1/4-20 X 3/4 HH CAPSCREW USE	8
4	A0061008	1/4 MED LOK WSHR	8
5	A0036065	3/8-16 X 1 1/4 CAPSCREW	3
6	F015922	DC-3/8-16 ELASTIC STOP NUT *	1
7	0-3044005-0-04	GASKET	2

CONFIDENTIAL
© COPYRIGHT 2001 HARSCO TRACK TECHNOLOGIES. THIS DRAWING OR DOCUMENT IS THE PROPERTY OF HARSCO TRACK TECHNOLOGIES AND EMBODIES CONFIDENTIAL INFORMATION, TRADE SECRET INFORMATION, AND/OR KNOW-HOW THAT IS THE PROPERTY OF HARSCO TRACK TECHNOLOGIES. BY ACCEPTING THIS DRAWING OR DOCUMENT, THE RECIPIENT AGREES (1) NOT TO PROVIDE, OR OTHERWISE MAKE AVAILABLE, THE DRAWING OR DOCUMENT, OR ANY INFORMATION OR KNOW-HOW EMBODIED THEREIN, TO ANY THIRD PARTY AND (2) NOT TO REPRODUCE OR USE THE DRAWING OR DOCUMENT TO MANUFACTURE ANY APPARATUS OR DEVICE, WITHOUT THE PRIOR WRITTEN AUTHORIZATION OF HARSCO TRACK TECHNOLOGIES.

SOLID EDGE DRAWING

IMPLIED TOLERANCES
ALL DIMENSIONS ARE IN INCHES - TOLERANCE UNLESS OTHERWISE SPECIFIED

NORMAL SIZE RANGE OVER	TO	HIGH PLUS OR MINUS 2 PLACE DECIMAL	3 PLACE DECIMAL	NORMAL SIZE RANGE OVER	TO	METRIC PLUS OR MINUS 1 PLACE DECIMAL	2 PLACE DECIMAL
0	6	.03	.005	0	150	.8	.13
6	24	.04	.008	150	600	1.0	.20
24	-	.05	.010	-	600	1.5	.25

UNLESS OTHERWISE SPECIFIED ALL MACHINED SURFACES WILL HAVE:
A SURFACE FINISH OF 125 MICROINCHES
ANGULAR TOLERANCE OF +.50°
CONCENTRICITY WITHIN .010

THIRD ANGLE PROJECTION

UNLESS OTHERWISE SPECIFIED ALL WELDS SHOULD ADHERE TO THE LATEST HTT WELDING SPECIFICATION 101

CHANGE	R/L	REVISION			DATE
12498	-	NEW RELEASE			02-11-03
101600	A	ADDED ITEM 7			5-20-08
ECN-105115	B	DIM 15 WAS 16 (2X), DIM11 WAS 12	AO	HW	27 JAN 10

Description: JUMP SEAT INSTALLATION
Drawing Number: ——————— JUMP SEAT INSTALLATION
Machine Type: Drawn: lloconnor Date Drawn: 5-20-08
Model: H6338XAA.dft
Weight: ——————— Scale: 1:8 APVD Dwg: HW APVD Chkng: JBR
Mat'l

HTT
Harsco Track Technologies
Harsco
Columbia, SC

Part Number: H6338XAA Size: D Sheet: 1 of 1

Plotted by hwiggins on 9/9/2010 H6338XAA.dft

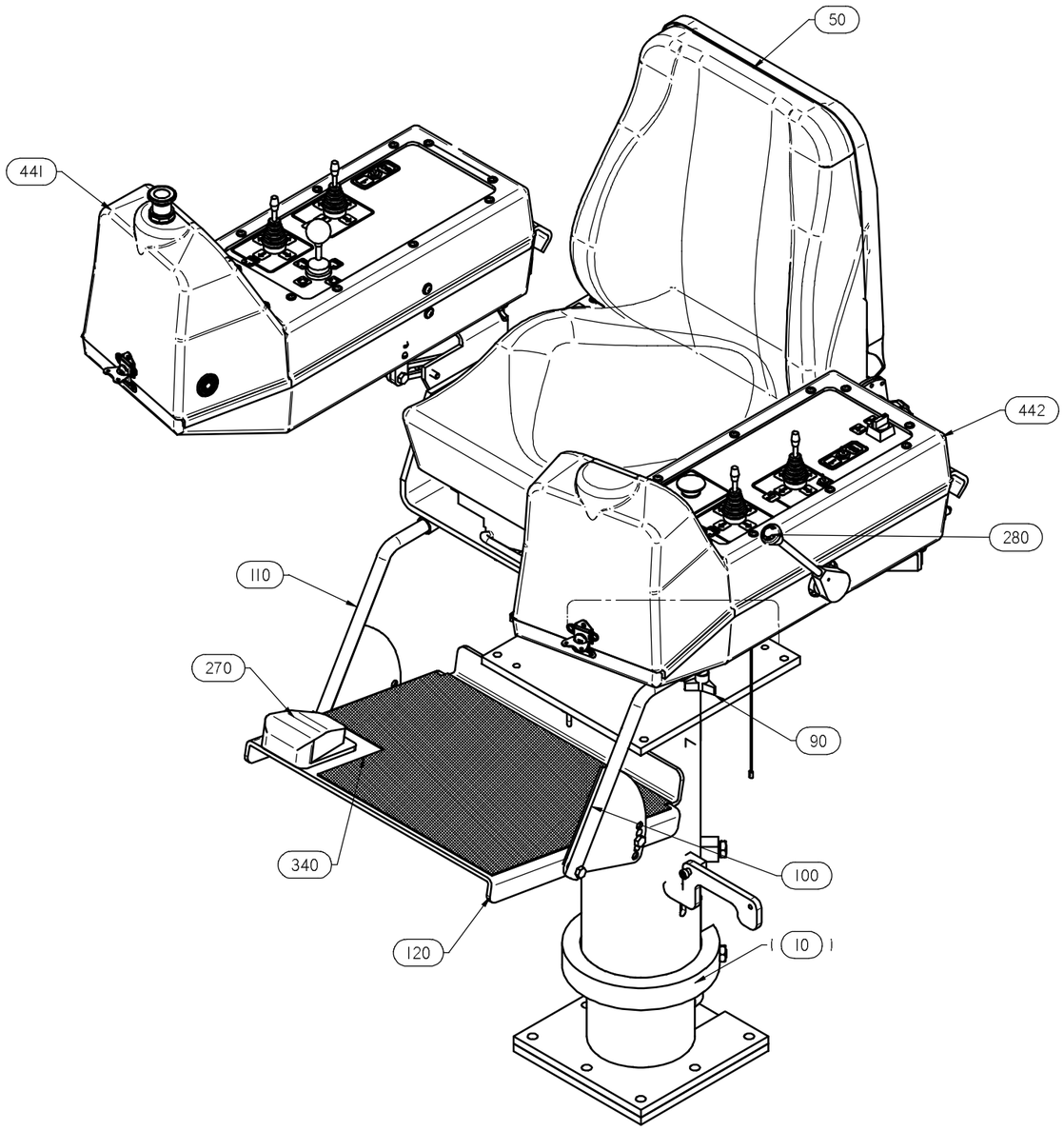

Item Number	Document Number	Title	Quantity
10	C8651WAA	SEAT STAND	1
20	C8693WAA	CRADLE WLDT	1
30	H6169W01	L/H CONSOLE BRKT	1
40	H6169W02	CONSOLE, R/H BRKT	1
50	A4427Y02	SEAT	1
60	F019025	CAB CONTROL VALVE	1
90	A3697Y01	KNOB, THREE ARM	1
100	D5453YAA	L/H SLIDE BAR WLDT	1
110	D5453YAB	R/H SLIDE BAR WLDT	1
120	D5277X01	FOOT REST	1
130	A0036067	3/8-16 X 1 3/4 HH CAPSCREW	6
140	A0061010	3/8 MED LOK WSHR USE F001025	6
150	A0055012	3/8-16 HEX NUTS	4
160	A0036065	3/8-16 X 1 1/4 HH CAPSCREW	12
170	L40387	NUT ELASTIC STOP	6
180*	L423094	HOSE, 1/4 LP	15
190	B1637Y02	ARM REST LOCK, RIGHT	2
200	Z752500-009	SHOULDER BOLT, 3/8 X 3/4	2
210	D3264X01	TAPPED PLATE	2
220	A0050078	1/4-20 X 3/4 RD HD MS	8
230*	F004606	DC-1/4-20 ELASTIC STOP NUT	8
240	A1103Y01	CABLE	4
250	Z686508	CENTER JACK RING	1
260	A4577T02	SWAGE SLEEVE	2
270	C5363WAK	FOOTSWITCH, M12 CONN	1
280	4008071	VALVE, BRAKE, SPRING RETURN	1
290	F002887	DC-HHD CAP SCR3/8-16X3/4GR5	2
300	0-3413003-0-15	AIR VALVE	1
310	F009591	RD HD MS #10-24 X .750	2
320	F018029K	#10-24 ELASTIC STOP NUT	2
330	F020452	DC-STR 4X4 BH	4
340	D5491Y01	ANTISKID MAT	1
350	F015085	ELB 90 4X4FS	4
360	F011937	DC-ELB90 4X4NPT	5
370	F012318	DC STR 4X4NPT	3

Item Number	Document Number	Title	Quantity
380*	5006486	DC-MALE ELB90 4X2NPT *	1
390	L423261	HOSE END, -4 JIC SW	5
400	F021905	TEE 4FSX4X4	1
410	0-3304057-0-13	TEE FLARE / TUBE	1
420	A0036037	5/16-18 x 1 3/4" HHCS GR5	4
430	F018615	SAE FLAT WASHER .3125	4
440	F014476	HEX ELASTIC STOP NUT .3125-18	4
441*	5007955	RIGHT ARMREST ASSEMBLY	1
442*	5007954	LEFT ARMREST ASSEMBLY	1

SOLID EDGE DRAWING

CONFIDENTIAL

© COPYRIGHT 2001 HARSCO TRACK TECHNOLOGIES. THIS DRAWING OR DOCUMENT IS THE PROPERTY OF HARSCO TRACK TECHNOLOGIES AND EMBODIES CONFIDENTIAL INFORMATION, TRADE SECRET INFORMATION, AND/OR KNOW-HOW THAT IS THE PROPERTY OF HARSCO TRACK TECHNOLOGIES. BY ACCEPTING THIS DRAWING OR DOCUMENT, THE RECIPIENT AGREES (1) NOT TO PROVIDE, OR OTHERWISE MAKE AVAILABLE, THE DRAWING OR DOCUMENT, OR ANY INFORMATION OR KNOW-HOW EMBODIED THEREIN, TO ANY THIRD PARTY AND (2) NOT TO REPRODUCE OR USE THE DRAWING OR DOCUMENT TO MANUFACTURE ANY APPARATUS OR DEVICE, WITHOUT THE PRIOR WRITTEN AUTHORIZATION OF HARSCO TRACK TECHNOLOGIES.

IMPLIED TOLERANCES

ALL DIMENSIONS ARE IN INCHES - TOLERANCE UNLESS OTHERWISE SPECIFIED

NOMINAL SIZE RANGE		INCH PLUS OR MINUS		NOMINAL SIZE RANGE		METRIC PLUS OR MINUS	
OVER	TO	2 PLACE DECIMAL	3 PLACE DECIMAL	OVER	TO	1 PLACE DECIMAL	2 PLACE DECIMAL
0	6	.03	.005	0	150	.5	.127
6	24	.04	.008	150	600	1.0	.203
24	-	.06	.010	-	600	1.5	.254

UNLESS OTHERWISE SPECIFIED ALL MACHINED SURFACES WILL HAVE A SURFACE FINISH OF 125 MICROINCHES ANGULAR TOLERANCE OF ±.50° CONCENTRICITY WITHIN .010

THIRD ANGLE PROJECTION

UNLESS OTHERWISE SPECIFIED ALL WELDS SHOULD ADHERE TO THE LATEST HTT WELDING SPECIFICATION 101

CHANGE	R/L	REVISION	DATE
EC501125	A	NEW RELEASE	05-12-11

Description: SEAT ASSEMBLY

Drawing Number: ----------

Model: 5008334.asm

Weight: ----------

Scale: 1:4

Mat'l: - -

Machine Type: MARK IV

Drawn: hwiggins — Date Drawn: 05-12-11

APVD Dwg: HW — APVD Chkng: JBR

HTT
Harsco Track Technologies
Harsco
Columbia, SC

Part Number: 5008334 — Size: D — Sheet: 1 of 3

Plotted by hwiggins on 5/31/2011 5008334.dft

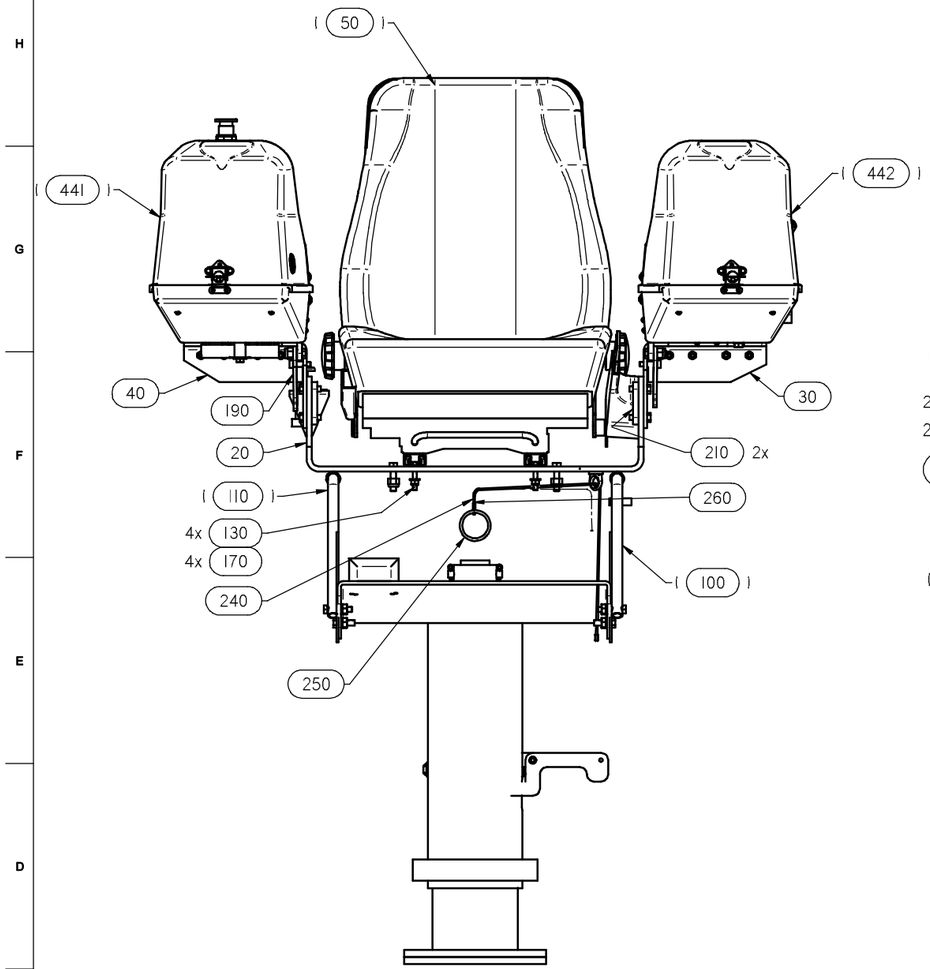

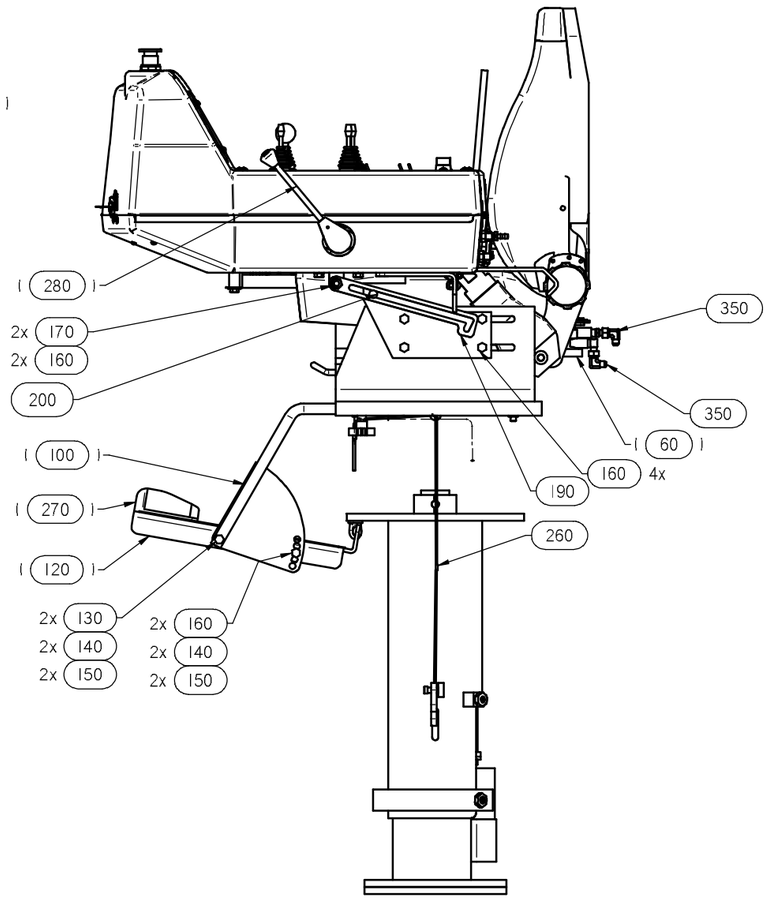

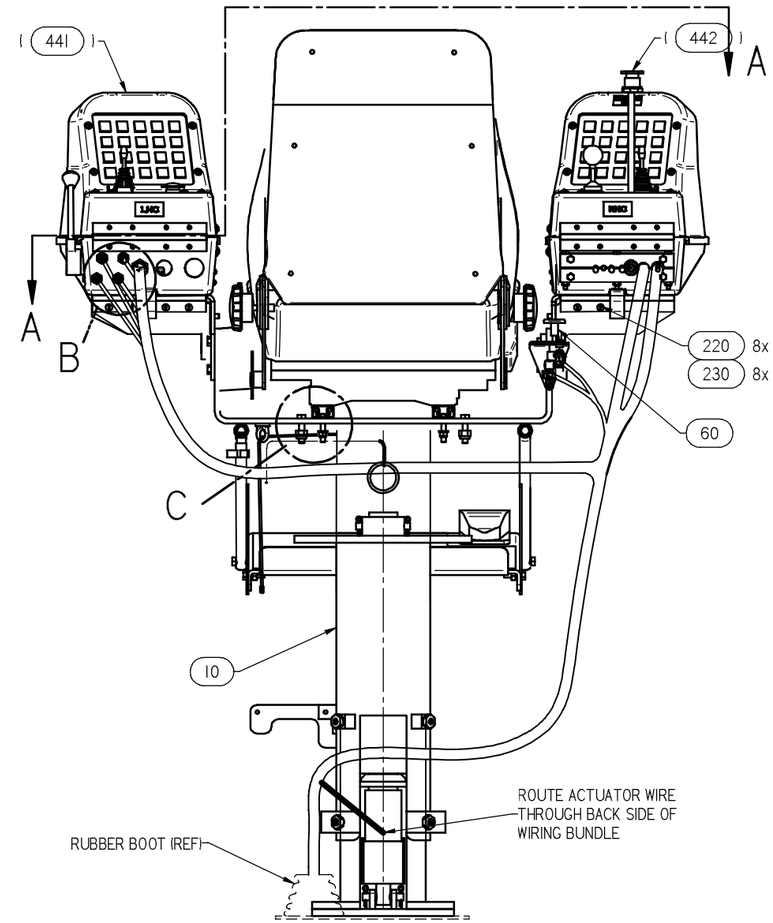

NOTE:

2-A SHOWN WITH ACTUATOR FULLY EXTENDED (12" STROKE)

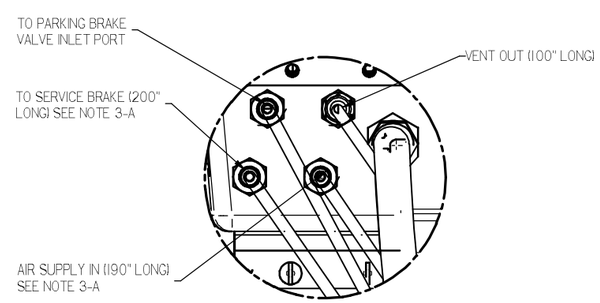

DETAIL B

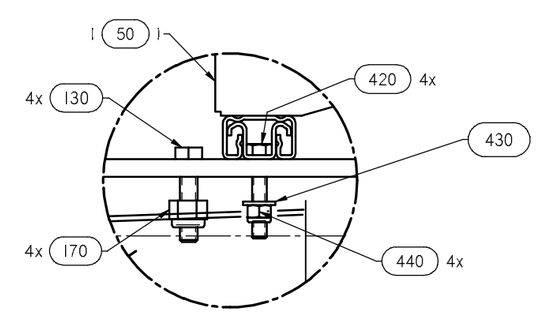

DETAIL C

SOLID EDGE DRAWING

CONFIDENTIAL
© COPYRIGHT 2001 HARSCO TRACK TECHNOLOGIES. THIS DRAWING OR DOCUMENT IS THE PROPERTY OF HARSCO TRACK TECHNOLOGIES AND EMBODIES CONFIDENTIAL INFORMATION, TRADE SECRET INFORMATION, AND/OR KNOW-HOW THAT IS THE PROPERTY OF HARSCO TRACK TECHNOLOGIES. BY ACCEPTING THIS DRAWING OR DOCUMENT, THE RECIPIENT AGREES (1) NOT TO PROVIDE, OR OTHERWISE MAKE AVAILABLE, THE DRAWING OR DOCUMENT, OR ANY INFORMATION OR KNOW-HOW EMBODIED THEREIN, TO ANY THIRD PARTY AND (2) NOT TO REPRODUCE OR USE THE DRAWING OR DOCUMENT TO MANUFACTURE ANY APPARATUS OR DEVICE, WITHOUT THE PRIOR WRITTEN AUTHORIZATION OF HARSCO TRACK TECHNOLOGIES.

IMPLIED TOLERANCES
ALL DIMENSIONS ARE IN INCHES - TOLERANCE UNLESS OTHERWISE SPECIFIED

NOMINAL SIZE RANGE OVER	TO	INCH PLUS OR MINUS 2 PLACE DECIMAL	3 PLACE DECIMAL	NOMINAL SIZE RANGE OVER	TO	METRIC PLUS OR MINUS 1 PLACE DECIMAL	2 PLACE DECIMAL
0	6	.03	.005	0	150	.8	.127
6	24	.04	.008	150	600	1.0	.203
24	-	.06	.010	-	600	1.5	.254

UNLESS OTHERWISE SPECIFIED ALL MACHINED SURFACES WILL HAVE A SURFACE FINISH OF 125 MICROINCHES ANGULAR TOLERANCE OF +- 30° CONCENTRICITY WITHIN .010

THIRD ANGLE PROJECTION

UNLESS OTHERWISE SPECIFIED ALL WELDS SHOULD ADHERE TO THE LATEST HTT WELDING SPECIFICATION 101

CHANGE	R/L	REVISION	DATE
EC501125	A	NEW RELEASE	05-12-11

Description: SEAT ASSEMBLY
Drawing Number: ——————————
Machine Type: MARK IV
Model: 5008334.asm
Drawn: hwiggins
Date Drawn: 05-12-11
Weight: ——————
Scale: 1:4
APVD Dwg: HW
APVD Chkg: JBR
Mat'l: - -

HTT
Harsco Track Technologies
Harsco
Columbia, SC

Part Number: 5008334
Size: D
Sheet: 2 of 3

Plotted by hwiggins on 5/31/2011 5008334.dft

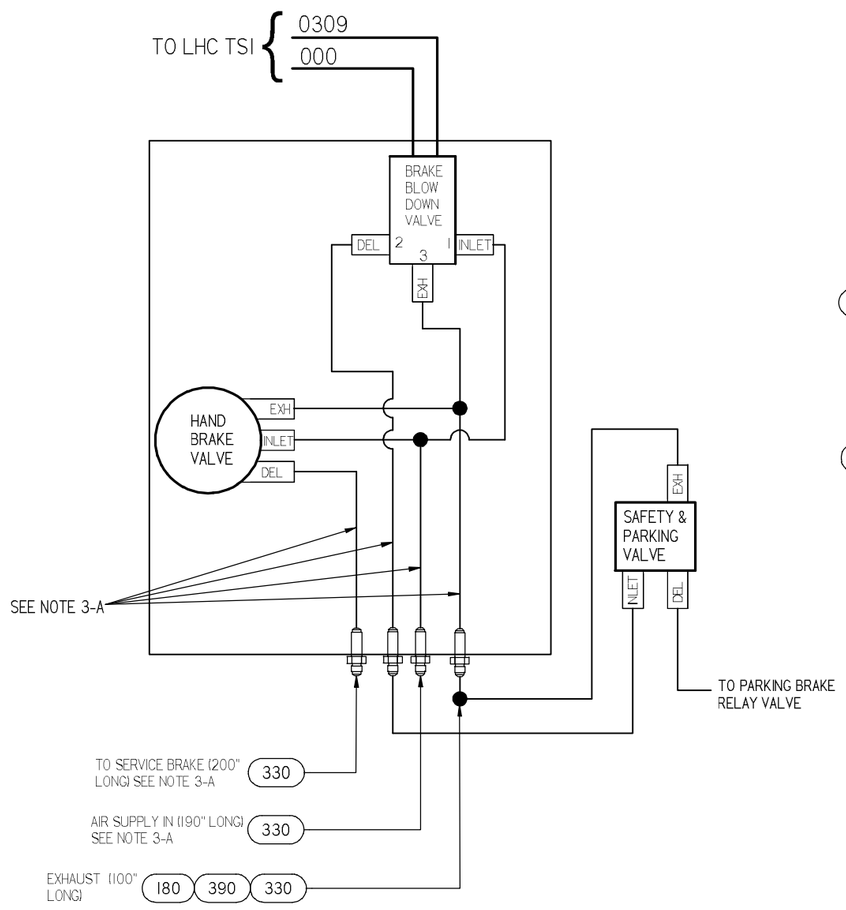

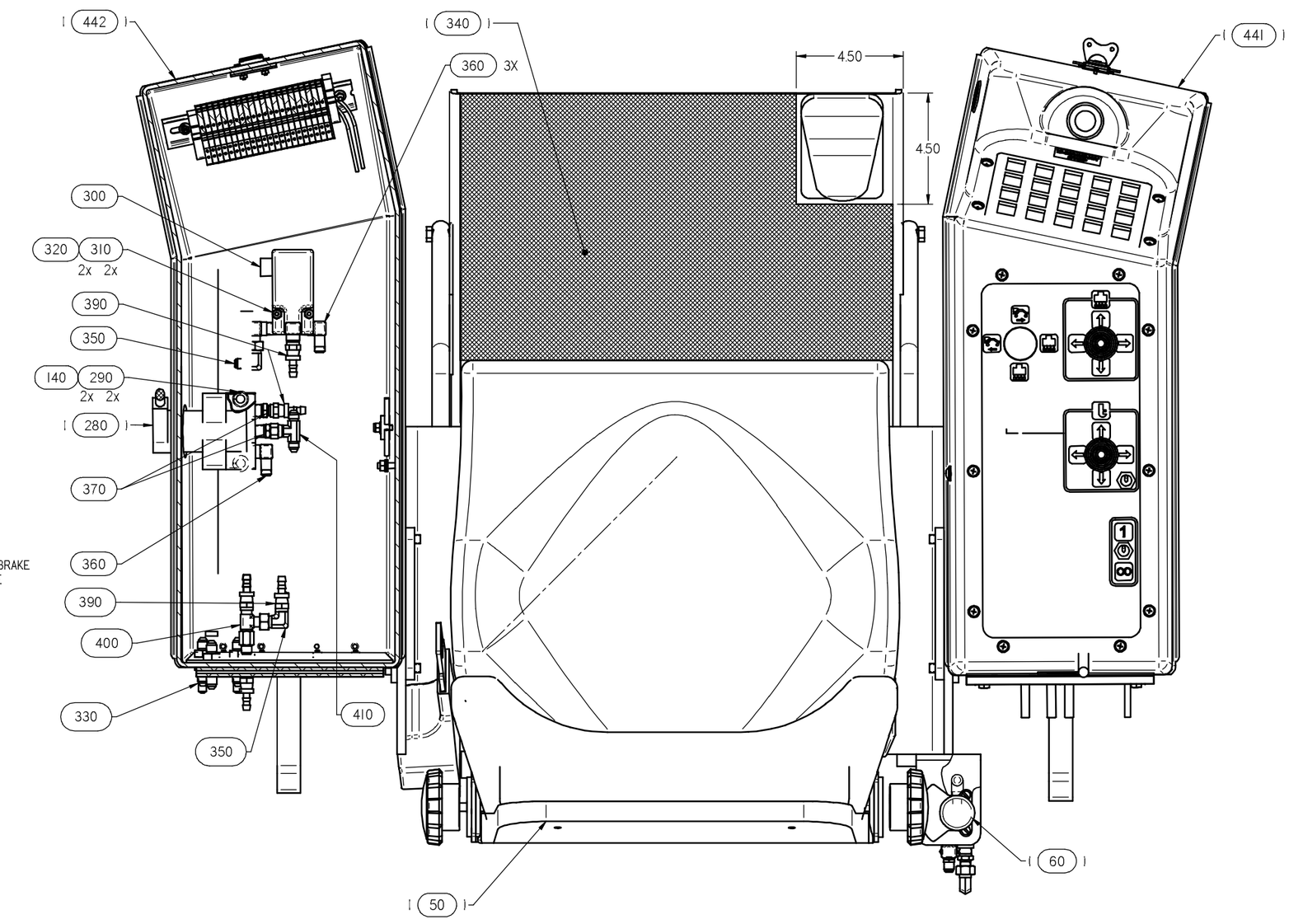

SECTION A-A

NOTE:

3-A AIR BRAKE HOSE AND HOSE ENDS ARE CALLED UP ON THE MARK IV HOSE KIT AS HOSE ASSEMBLIES MADE TO LENGTH AND ARE SHOWN HERE FOR REFERENCE ONLY.

SOLID EDGE DRAWING

CONFIDENTIAL

© COPYRIGHT 2001 HARSCO TRACK TECHNOLOGIES. THIS DRAWING OR DOCUMENT IS THE PROPERTY OF HARSCO TRACK TECHNOLOGIES AND EMBODIES CONFIDENTIAL INFORMATION, TRADE SECRET INFORMATION, AND/OR KNOW-HOW THAT IS THE PROPERTY OF HARSCO TRACK TECHNOLOGIES. BY ACCEPTING THIS DRAWING OR DOCUMENT, THE RECIPIENT AGREES (1) NOT TO PROVIDE, OR OTHERWISE MAKE AVAILABLE, THE DRAWING OR DOCUMENT, OR ANY INFORMATION OR KNOW-HOW EMBODIED THEREIN, TO ANY THIRD PARTY AND (2) NOT TO REPRODUCE OR USE THE DRAWING OR DOCUMENT TO MANUFACTURE ANY APPARATUS OR DEVICE, WITHOUT THE PRIOR WRITTEN AUTHORIZATION OF HARSCO TRACK TECHNOLOGIES.

IMPLIED TOLERANCES

ALL DIMENSIONS ARE IN INCHES - TOLERANCE UNLESS OTHERWISE SPECIFIED

NOMINAL SIZE RANGE OVER	TO	INCH 2 PLACE DECIMAL	INCH 3 PLACE DECIMAL	NOMINAL SIZE RANGE OVER	TO	METRIC 1 PLACE DECIMAL	METRIC 2 PLACE DECIMAL
0	6	.03	.005	0	150	.8	.127
6	24	.04	.008	150	600	1.0	.203
24	-	.06	.010	-	600	1.5	.254

PLUS OR MINUS

UNLESS OTHERWISE SPECIFIED ALL MACHINED SURFACES WILL HAVE: A SURFACE FINISH OF 125 MICROINCHES ANGULAR TOLERANCE OF +.25° CONCENTRICITY WITHIN .016

THIRD ANGLE PROJECTION

UNLESS OTHERWISE SPECIFIED ALL WELDS SHOULD ADHERE TO THE LATEST HTT WELDING SPECIFICATION 101

CHANGE	R/L	REVISION	DATE
EC501125	A	NEW RELEASE	05-12-11

Description: SEAT ASSEMBLY

Drawing Number: ——————

Model: 5008334.asm

Weight: ——————

Scale: 1:4

Mat'l: - -

Machine Type: MARK IV

Drawn: hwiggins — Date Drawn: 05-12-11

APVD Dwg: HW — APVD Chkg: JBR

HTT
Harsco Track Technologies
Harsco
Columbia, SC

Part Number: 5008334 — Size: D — Sheet: 3 of 3

Plotted by hwiggins on 5/31/2011 5008334.dft

ENG.DWG.NO.
C8651WAA

REVISIONS							
NO	ER	DESCRIPTION	ZONE	DR	CK	APP	MF
1	5860 .182	NEW RELEASE					
2	6447 .6	ADDED ITEMS 11 & 12		CJW	JA	AO	
3	8086	IT 11 WAS A0039004, ADDED IT 13 17 JAN 97		AO			

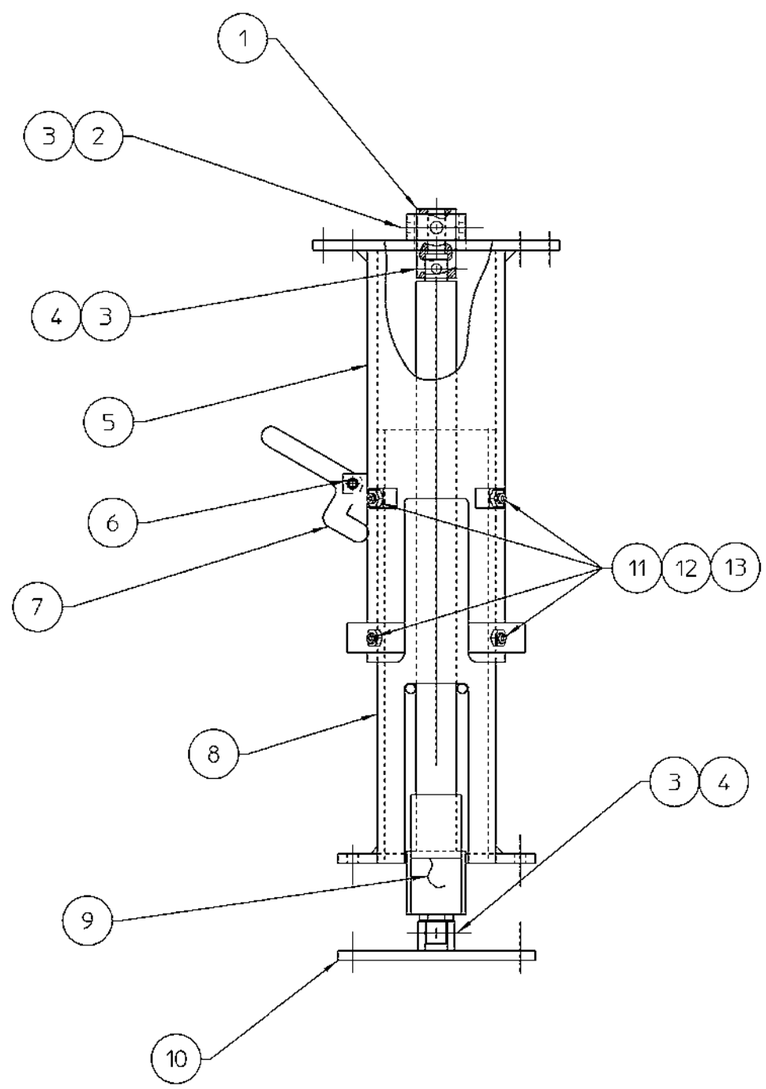

PLOT SCALE .25

FIG NO.	ITEM NO.	PART NUMBER	DESCRIPTION AND MATERIAL SIZE (REF.ONLY)	QTY
	13	G1904Y01	BRONZE INSERT	4
	12	A0056008	1/2-13 HEX JAM NUT	4
	11	A0062038	1/2-13x1 SOC HD SET SCR	4
	10	C8630XAA	BASE PLATE WELDT	1
	9	C8681X01	LINEAR ACTUATOR	1
	8	C8635XAA	INNER TUBE WELDT	1
	7	C8643Y01	LOCK HANDLE	1
	6	A0064055	SHOLDER BOLT 3/8 x 3/8 NYLOK	1
	5	C8633XAA	OUTER TUBE WELDT	1
	4	A0973T75	PIN 1/2 x 2 7/8	2
	3	A0068022	COTTER KEY 3/16 x 1	6
	2	Y691328-182	PIN 1/2 x 3 13/16	1
	1	C8631Y01	ADAPTOR	1

IMPLIED TOLERANCES
ALL DIMENSIONS ARE IN INCHES-TOLERANCE UNLESS OTHERWISE SPECIFIED

NOMINAL SIZE RANGE		PLUS OR MINUS			NOMINAL SIZE RANGE		PLUS OR MINUS		
OVER	TO	FRACTION	2 PLACE DECIMAL	3 PLACE DECIMAL	OVER	TO	FRACTION	2 PLACE DECIMAL	3 PLACE DECIMAL
-	1	1/64	.01	.003	6	24	3/64	.03	.008
1	6	1/32	.02	.005	24	-	1/16	.05	.010

ANGULAR DIMENSIONS PLUS OR MINUS 1 DEGREE

√ ALL MACHINED SURFACES TO HAVE A SURFACE FINISH OF 125 MICROINCHES UNLESS OTHERWISE SPECIFIED.

WELDING SPECIFICATION

UNLESS OTHERWISE SPECIFIED ALL WELDS SHOULD ADHERE TO FAIRMONT TAMPER WELDING SPECIFICATION NO. 101

WEIGHT lbs.

3rd ANGLE PROJECTION

DO NOT SCALE

SHEET 1 CONT. ON –

DESCRIPTION 24
SEAT STAND

DRAWN A.OUZTS	DATE 19 AUG 92	MACHINE TYPE MARK IV	
CHECKED OGV	DATE 9-23-92	Fairmont Tamper	2401 Edmund Road-Box 20 Cayce-West Columbia, South Carolina 29171-0026 (803) 822-9160
APP-ENG RJM	DATE 9-1-92		
APP-MFG	DATE		
LAST ECR. 8006. 1	CHECKED dvan DATE 5-Feb-97	ENG.DWG.NO. C8651WAA	

THIS DOCUMENT CONTAINS PROPRIETARY INFORMATION AND SUCH INFORMATION MAY NOT BE DISCLOSED TO OTHERS FOR ANY PURPOSE OR USED FOR MANUFACTURING PURPOSES WITHOUT THE WRITTEN PERMISSION OF FAIRMONT TAMPER.

FOOT SWITCH

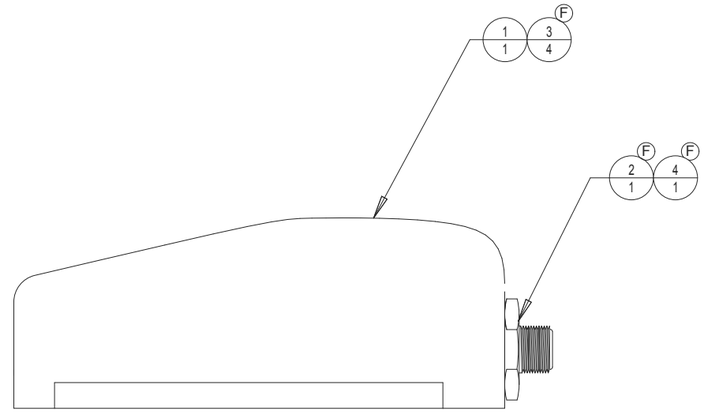

NOTE 2

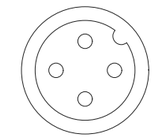

VIEW OF CONNECTOR

SWITCH WIRING

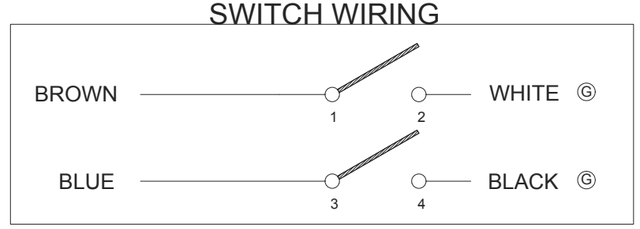

NOTES:

1) REMOVE CONNECTOR FROM FOOT SWITCH AND DISCARD, BEFORE INSTALLING ITEM 2.

2) MAKE SURE TO INSTALL CONNECTOR SO THAT NOTCH IN CONNECTOR IS AT 2 O'CLOCK POSITION AS SHOWN ABOVE

3) USE BLUE LOCTITE, P/N 0-3040000-0-06, ON ITEM 2 WHEN INSTALLING IN FOOT SWITCH.

PRODUCT STRUCTURE

	ITEM	QTY	PART #	PART DESCRIPTION	
	1	1	0-3115000-0-02	SWITCH, FOOT	: FOOT PEDAL, DPDT
F	2	1	203437	CONNECTOR, MALE	: 4-PIN RECEPTACLE W/18 IN LEADS, MALE M12
F	3	4	F018815	TERMINAL, SPADE	: .187" FEMALE SPADE, 22-18 AWG, INSULATED
F	4	1	F019878	LOCK NUT	: 1/2" NUT

CONFIDENTIAL

©COPYRIGHT 2010 HARSCO. THIS DRAWING OR DOCUMENT IS THE PROPERTY OF HARSCO AND EMBODIES CONFIDENTIAL INFORMATION, TRADE SECRET INFORMATION, AND/OR KNOW-HOW THAT IS THE PROPERTY OF HARSCO. BY ACCEPTING THIS DRAWING OR DOCUMENT, THE RECIPIENT AGREES (1) NOT TO PROVIDE, OR OTHERWISE MAKE AVAILABLE, THE DRAWING OR DOCUMENT, OR ANY INFORMATION OR KNOW-HOW EMBODIED THEREIN, TO ANY THIRD PARTY AND (2) NOT TO REPRODUCE OR USE THE DRAWING OR DOCUMENT TO MANUFACTURE ANY APPARATUS OR DEVICE, WITHOUT THE PRIOR WRITTEN AUTHORIZATION OF HARSCO.

CHANGE #		DATE
12346.97	A	10/01
12346.118	B	02/02
12346.242	C	05/04
12498.63	D	07/05
12490.31	E	09/08
105640	F	05/10
EC502553	G	12-14-11

DRAWING TITLE/DESCRIPTION: FOOTSWITCH, M12 CONN M12 Momentary Footswitch

MACHINE TYPE-MODEL: MARK IV

E3 PROJECT FILE NAME: C5363WAK

SHEET NUMBER: 1

NUMBER OF JUPITER SHEETS: 0

TOTAL NUMBER OF SHEETS: 1

DRAWN BY: DWJ

REL. DATE: 10/01

SIZE: D

SCALE:

HARSCO RAIL

E3 DRAWING

C5363WAK

ENG.DWG.NO.
H5975WAA

REVISIONS							
NO	ER	DESCRIPTION	ZONE	DR	CK	APP	MF
1	12509	RELEASED					

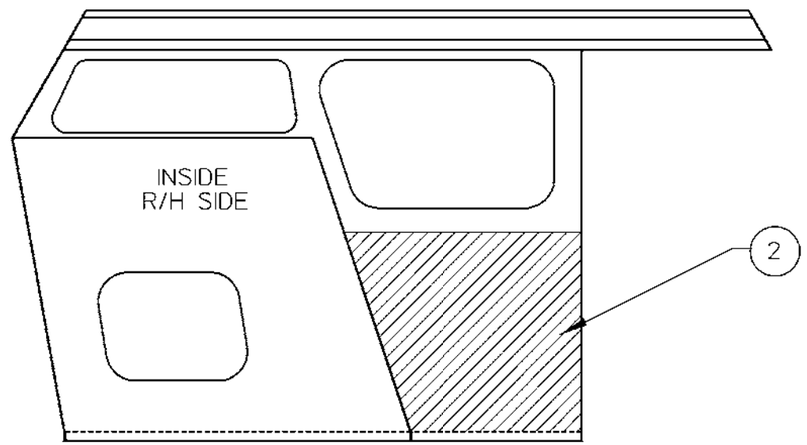

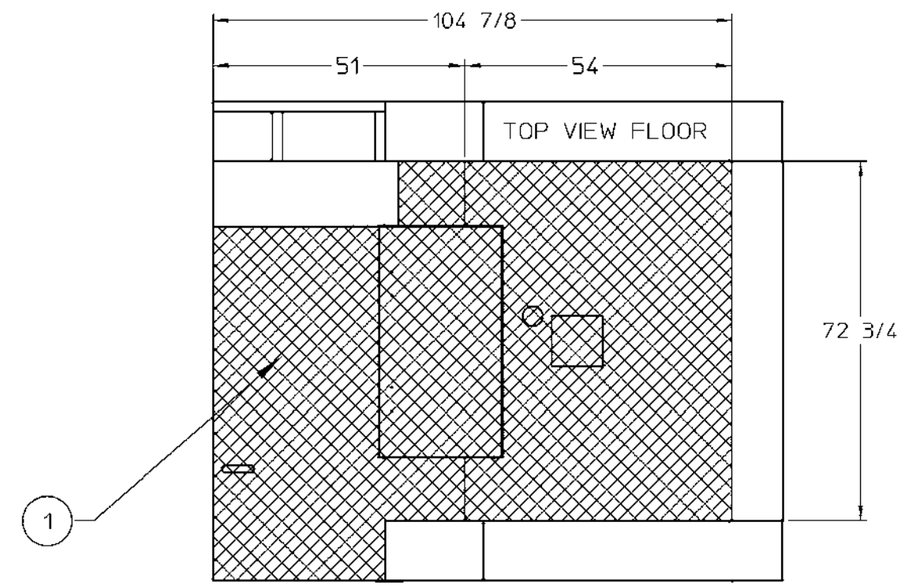

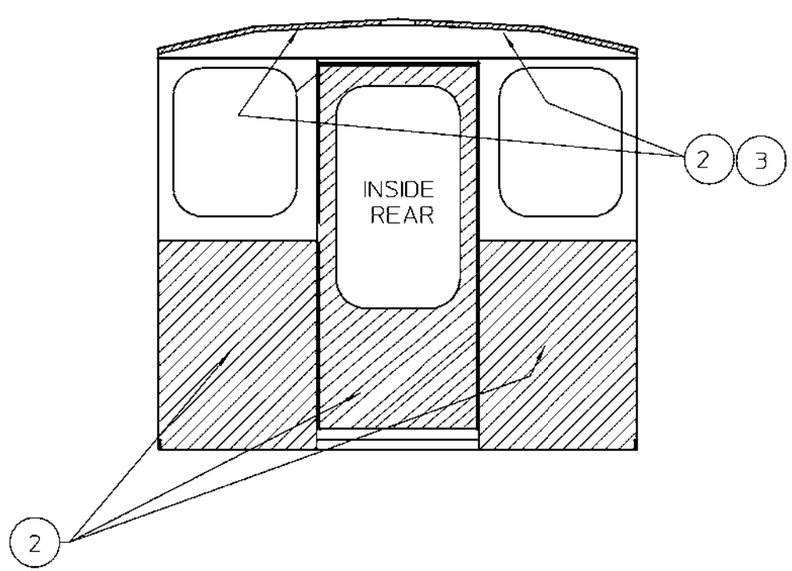

PLOT SCALE -16

FIG NO.	ITEM NO.	PART NUMBER	DESCRIPTION AND MATERIAL SIZE (REF.ONLY)	QTY
	3	0-3010002-0-00	ALUM CAP	36
	2	A7433Y02	CAB PADDING (1"x54x120)	4
	1	A2407Y02	FLOOR MAT (54"x150" lg.) (63.75 sq. ft.)	12.5

IMPLIED TOLERANCES
ALL DIMENSIONS ARE IN INCHES-TOLERANCE UNLESS OTHERWISE SPECIFIED

NOMINAL SIZE RANGE		PLUS OR MINUS			NOMINAL SIZE RANGE		PLUS OR MINUS		
OVER	TO	FRACTION	2 PLACE DECIMAL	3 PLACE DECIMAL	OVER	TO	FRACTION	2 PLACE DECIMAL	3 PLACE DECIMAL
-	1	1/64	.01	.003	6	24	3/64	.03	.008
1	6	1/32	.02	.005	24	-	1/16	.05	.010

ANGULAR DIMENSIONS PLUS OR MINUS 1 DEGREE

√ ALL MACHINED SURFACES TO HAVE A SURFACE FINISH OF 125 MICROINCHES UNLESS OTHERWISE SPECIFIED.

WELDING SPECIFICATION

UNLESS OTHERWISE SPECIFIED ALL WELDS SHOULD ADHERE TO FAIRMONT TAMPER WELDING SPECIFICATION NO. 101

WEIGHT lbs.

3rd ANGLE PROJECTION

DO NOT SCALE

SHEET 1 CONT. – DH –

DESCRIPTION 124
CAB PADDING & FLOOR MAT

DRAWN A.DUZTS	DATE 06 JUN 02	MACHINE TYPE MK IV	
CHECKED HW	DATE	Fairmont Tamper™ 2401 Edmund Road-Box 20 Cayce-West Columbia, South Carolina 29171-0020 (803) 622-9460	
APP-ENG JBR	DATE		
APP-MFG	DATE		
LAST BCP. 12509 .28	CHECKED hwi DATE 17-Jun-02	ENG.DWG.NO. H5975WAA	

THIS DOCUMENT CONTAINS PROPRIETARY INFORMATION AND SUCH INFORMATION MAY NOT BE DISCLOSED TO OTHERS FOR ANY PURPOSE OR USED FOR MANUFACTURING PURPOSES WITHOUT THE WRITTEN PERMISSION OF FAIRMONT TAMPER.

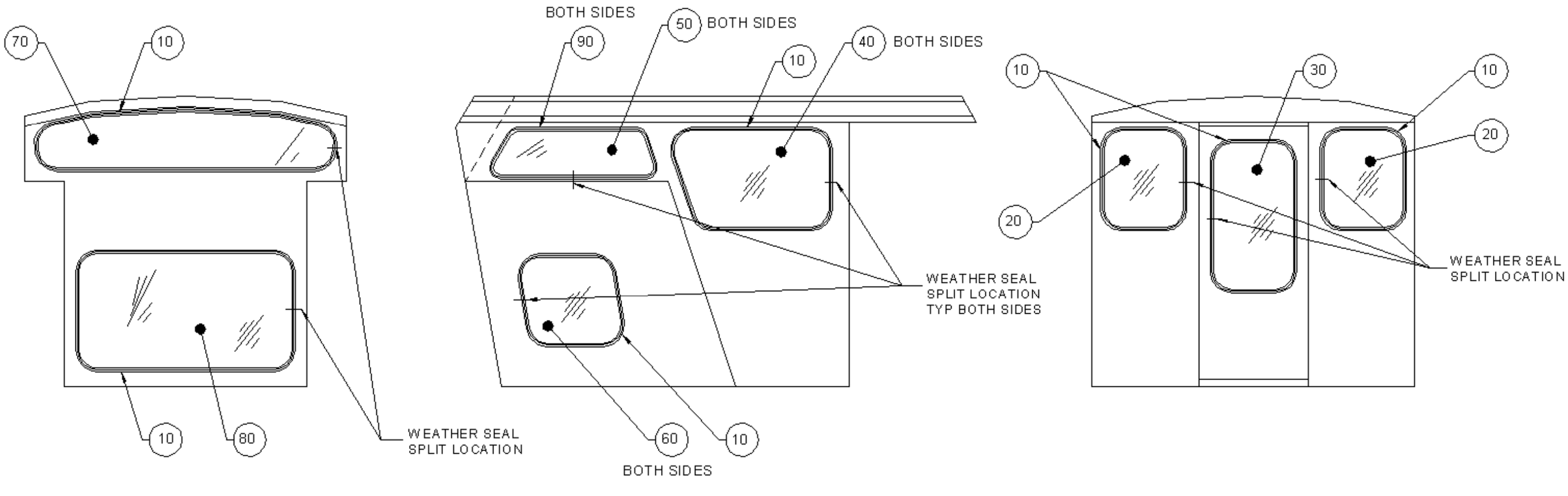

NOTES:

1.1 APPLY SEALANT (D3601Y02) BETWEEN THE WEATHER SEAL & OUTSIDE CAB WALL AND THE WEATHERSEAL & GLAZING.

ITEM	PART NO.	DESCRIPTION	QTY	GLASS TYPE
10	0-3044002-0-01	WEATHER SEAL (FT)	100	N/A
20	A0222T83	GLASS	2	CLEAR MAR RESISITANT ACRYLIC
30	5007430	GLASS	1	CLEAR LAMINATED SAFETY GLASS
40	C0449X01	GLASS	2	CLEAR MAR RESISITANT ACRYLIC
50	4011920	SIDE WINDOW FRONT	2	CLEAR MAR RESISITANT ACRYLIC
60	C0447Y09	LOWER SIDE WINDOW	2	CLEAR MAR RESISITANT ACRYLIC
70	C8939W03	TOP FRONT WINDOW	1	CLEAR LAMINATED SAFETY GLASS
80	C5869T12	GLASS	1	CLEAR MAR RESISITANT ACRYLIC
90	L424230	RUBBER WEATHER SEAL (FT)	22	N/A

Inch
[mm]

CONFIDENTIAL
© COPYRIGHT 2011 HARSCO. THIS DRAWING OR DOCUMENT IS THE PROPERTY OF HARSCO AND EMBODIES CONFIDENTIAL INFORMATION, TRADE SECRET INFORMATION, AND/OR KNOW-HOW THAT IS THE PROPERTY OF HARSCO. BY ACCEPTING THIS DRAWING OR DOCUMENT, THE RECIPIENT AGREES (1) NOT TO PROVIDE, OR OTHERWISE MAKE AVAILABLE, THE DRAWING OR DOCUMENT, OR ANY INFORMATION OR KNOW-HOW EMBODIED THEREIN, TO ANY THIRD PARTY AND (2) NOT TO REPRODUCE OR USE THE DRAWING OR DOCUMENT TO MANUFACTURE ANY APPARATUS OR DEVICE, WITHOUT THE PRIOR WRITTEN AUTHORIZATION OF HARSCO.

NOMINAL SIZE RANGE		INCH PLUS OR MINUS	
OVER	TO	2 PLACE DECIMAL	3 PLACE DECIMAL
0	6	.03	.005
6	24	.04	.008
24	-	.06	.010

NOMINAL SIZE RANGE		METRIC PLUS OR MINUS	
OVER	TO	1 PLACE DECIMAL	2 PLACE DECIMAL
0	150	.8	.13
150	600	1.0	.20
600	-	1.5	.25

UNLESS OTHERWISE SPECIFIED ALL MACHINED SURFACES WILL HAVE;
A SURFACE FINISH OF 125 MICROINCHES
ANGULAR TOLERANCE OF ± .50°
CONCENTRICITY WITHIN .010

THIRD ANGLE PROJECTION

UNLESS OTHERWISE SPECIFIED, ALL WELDS SHOULD ADHERE TO THE MOST CURRENT A.W.S WELDING STANDARDS

CHANGE	R/L	REVISION	DR	DATE
EC500922	A	NEW RELEASE	SRK	03-25-11

Description: CAB GLASS INSTALLATION

HARSCO RAIL

Material: ___
Weight: ___
Machine Type: MARK IV
Drawn: skumar
Date Drawn: 4/15/2011
Part Number: 5006864
Size: D
Sheet: 1 of 1

SOLID EDGE DRAWING
DO NOT SCALE

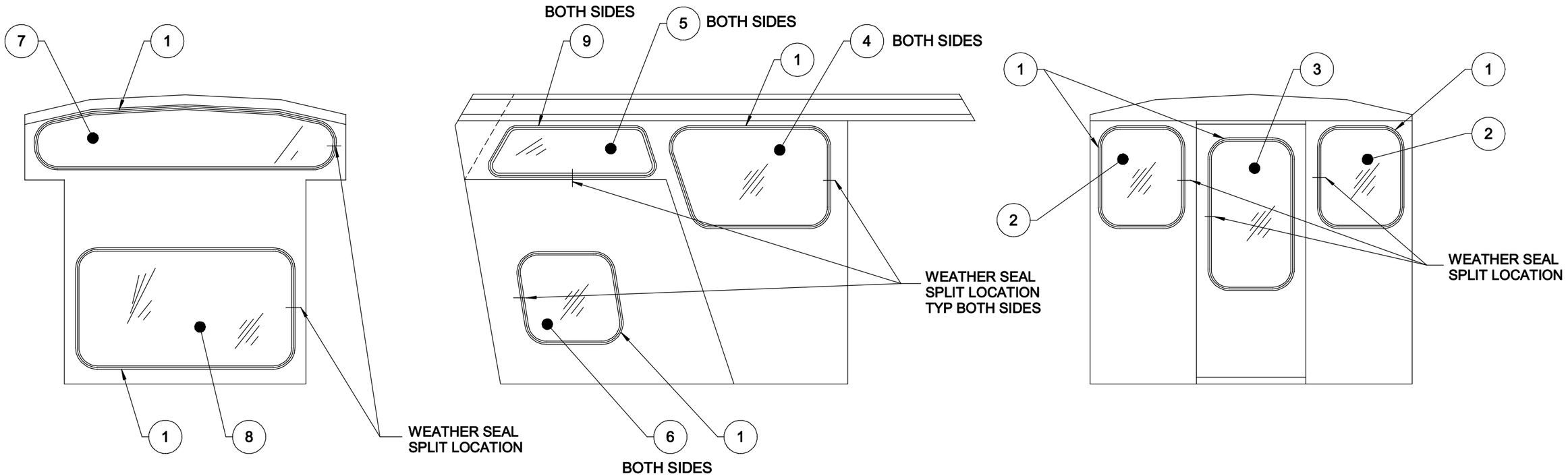

NOTES:
1. APPLY SEALANT (D3601Y02) BETWEEN THE WEATHERSEAL & OUTSIDE CAB WALL AND THE WEATHERSEAL & GLAZING.

ITEM NO.	PART NUMBER	DESCRIPTION	QTY	REMARKS
1	0-3044002-0-01	WEATHER SEAL	100	
2	C5869T33	GLASS	2	BRONZE TINTED LAMINATED SAFETY GLASS
3	C5869T34	GLASS	1	BRONZE TINTED LAMINATED SAFETY GLASS
4	C0449X04	GLASS	2	BRONZE TINTED LAMINATED SAFETY GLASS
5	4018005	SIDE WINDOW FRONT	2	BRONZE TINTED LAMINATED SAFETY GLASS
6	C0447Y12	LOWER SIDE WINDOW	2	BRONZE TINTED LAMINATED SAFETY GLASS
7	C8939W03	TOP FRONT WINDOW	1	CLEAR LAMINATED SAFETY GLASS
8	C5869T35	GLASS	1	CLEAR LAMINATED SAFETY GLASS
9	L424230	RUBBER WEATHER SEAL	22	

CONFIDENTIAL
© COPYRIGHT 2001 HARSCO TRACK TECHNOLOGIES. THIS DRAWING OR DOCUMENT IS THE PROPERTY OF HARSCO TRACK TECHNOLOGIES AND EMBODIES CONFIDENTIAL INFORMATION, TRADE SECRET INFORMATION, AND/OR KNOW-HOW THAT IS THE PROPERTY OF HARSCO TRACK TECHNOLOGIES. BY ACCEPTING THIS DRAWING OR DOCUMENT, THE RECIPIENT AGREES (1) NOT TO PROVIDE, OR OTHERWISE MAKE AVAILABLE, THE DRAWING OR DOCUMENT, OR ANY INFORMATION OR KNOW-HOW EMBODIED THEREIN, TO ANY THIRD PARTY AND (2) NOT TO REPRODUCE OR USE THE DRAWING OR DOCUMENT TO MANUFACTURE ANY APPARATUS OR DEVICE, WITHOUT THE PRIOR WRITTEN AUTHORIZATION OF HARSCO TRACK TECHNOLOGIES.

SOLID EDGE DRAWING

IMPLIED TOLERANCES
ALL DIMENSIONS ARE IN INCHES - TOLERANCE UNLESS OTHERWISE SPECIFIED

NOMINAL SIZE RANGE OVER	TO	INCH PLUS OR MINUS 2 PLACE DECIMAL	INCH PLUS OR MINUS 3 PLACE DECIMAL	NOMINAL SIZE RANGE OVER	TO	METRIC PLUS OR MINUS 1 PLACE DECIMAL	METRIC PLUS OR MINUS 2 PLACE DECIMAL
0	6	.03	.005	0	150	.8	.13
6	24	.04	.008	150	600	1.0	.20
24	-	.06	.010	-	600	1.5	.25

UNLESS OTHERWISE SPECIFIED ALL MACHINED SURFACES WILL HAVE A SURFACE FINISH OF 125 MICROINCHES ANGULAR TOLERANCE OF +-.20° CONCENTRICITY WITHIN .010

THIRD ANGLE PROJECTION

UNLESS OTHERWISE SPECIFIED ALL WELDS SHOULD ADHERE TO THE LATEST HTT WELDING SPECIFICATION 101

CHANGE	R/L	REVISION	DATE
101961	A	RELEASE	8/5/08

Description: --
Drawing Number: ---------- CAB GLASS INSTALLATION
Machine Type: ----------
Model: NONE
Drawn: mflanning
Date Drawn: 8/5/08
Weight:
Scale:
APVD Dwg: JBR
APVD Ctlbg: BCB
Mat'l:

HTT
Harsco Track Technologies
Harsco
Columbia, SC

Part Number: 4018004
Size: D
Sheet: 1 of 1

Plotted by smadmin on 9/9/2010 4018004.dft

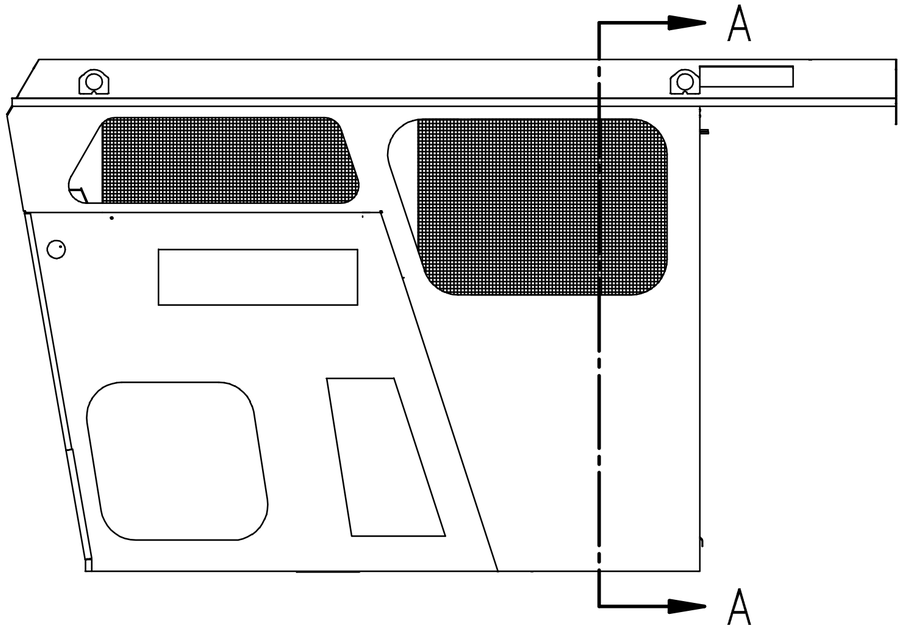

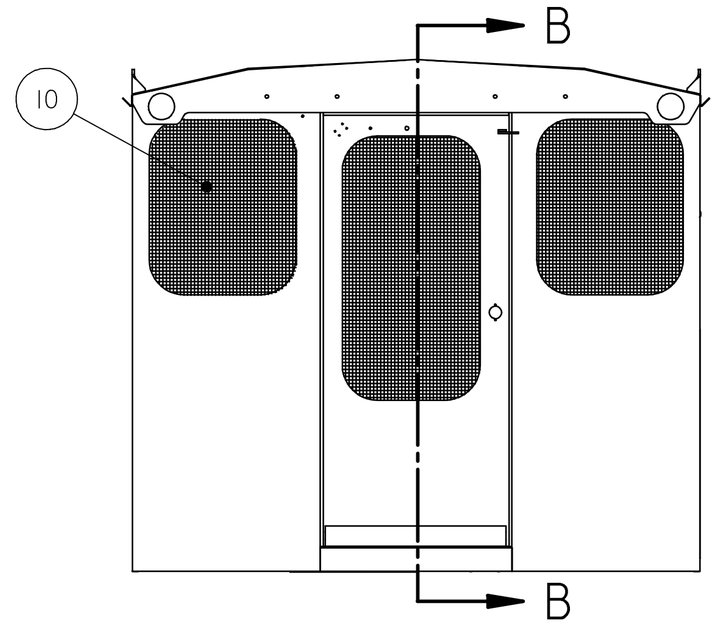

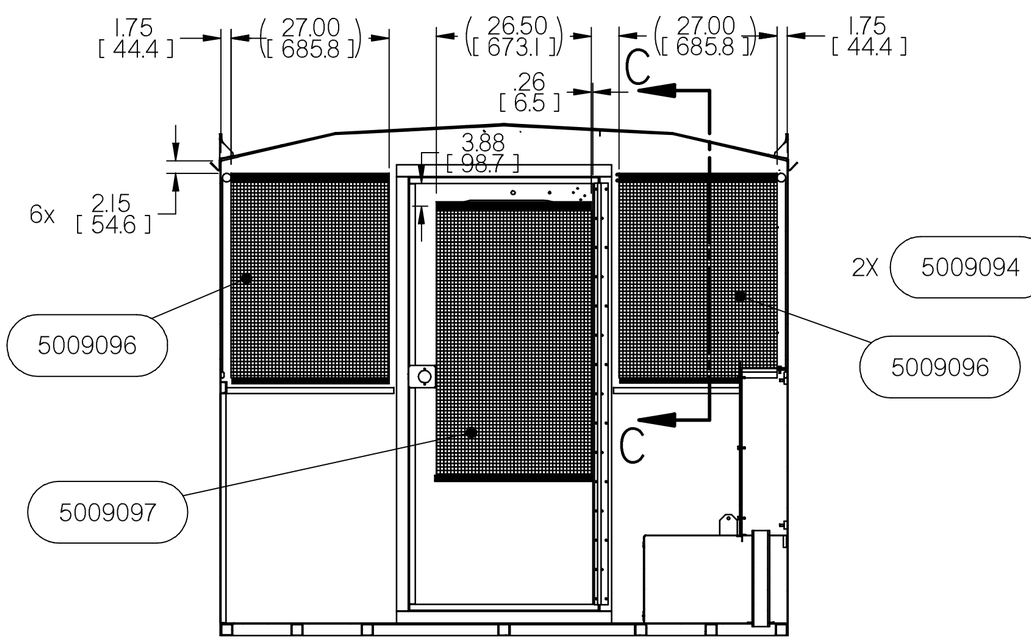

SECTION A-A

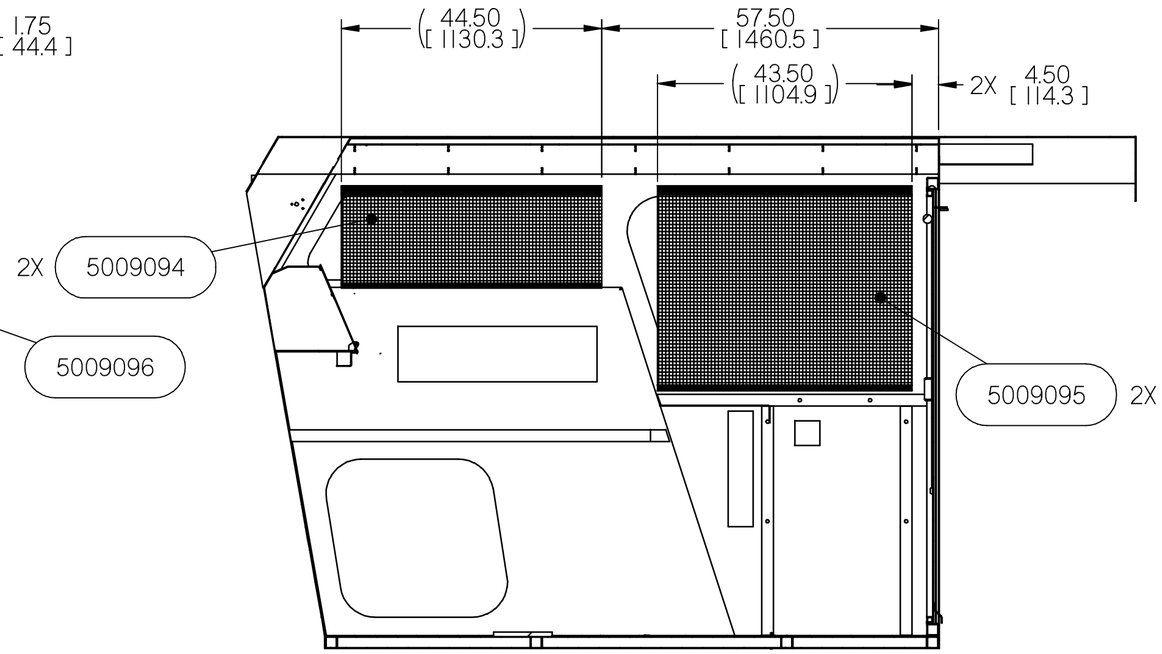

SECTION B-B

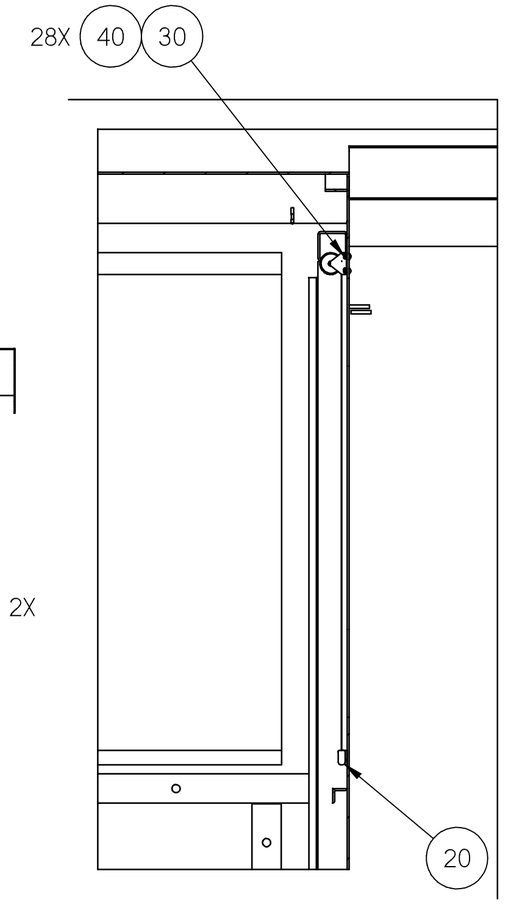

SECTION C-C

Item Number	Document Number	Title	Quantity
10*	5009100	SOLAR BLINDS, KIT	1
20	413457	VELCRO (IN)	24
30	F009723	RD HD MS #10-24 X .375	28
40	F018029K	#10-24 ELASTIC STOP NUT	28

Inch
[mm]

CONFIDENTIAL

© COPYRIGHT 2011 HARSCO. THIS DRAWING OR DOCUMENT IS THE PROPERTY OF HARSCO AND EMBODIES CONFIDENTIAL INFORMATION, TRADE SECRET INFORMATION, AND/OR KNOW-HOW THAT IS THE PROPERTY OF HARSCO. BY ACCEPTING THIS DRAWING OR DOCUMENT, THE RECIPIENT AGREES (1) NOT TO PROVIDE, OR OTHERWISE MAKE AVAILABLE, THE DRAWING OR DOCUMENT, OR ANY INFORMATION OR KNOW-HOW EMBODIED THEREIN, TO ANY THIRD PARTY AND (2) NOT TO REPRODUCE OR USE THE DRAWING OR DOCUMENT TO MANUFACTURE ANY APPARATUS OR DEVICE, WITHOUT THE PRIOR WRITTEN AUTHORIZATION OF HARSCO.

NOMINAL SIZE RANGE		INCH PLUS OR MINUS	
OVER	TO	2 PLACE DECIMAL	3 PLACE DECIMAL
0	6	.03	.005
6	24	.04	.008
24	-	.06	.010

NOMINAL SIZE RANGE		METRIC PLUS OR MINUS	
OVER	TO	1 PLACE DECIMAL	2 PLACE DECIMAL
0	150	.8	.13
150	600	1.0	.20
600	-	1.5	.25

UNLESS OTHERWISE SPECIFIED ALL MACHINED SURFACES WILL HAVE;
A SURFACE FINISH OF 125 MICROINCHES
ANGULAR TOLERANCE OF ± .50°
CONCENTRICITY WITHIN .010

THIRD ANGLE PROJECTION

UNLESS OTHERWISE SPECIFIED, ALL WELDS SHOULD ADHERE TO THE MOST CURRENT A.W.S WELDING STANDARDS

CHANGE	R/L	REVISION	DR	DATE
EC501352	A	RELEASE	HW	06-17-11

Description: WINDOW BLINDS, INSTALLATION

HARSCO RAIL

Material: ----------

Machine Type: MARK IV

Size: C

Weight: 0.0 lbm

Drawn: hwiggins

Date Drawn: 6/16/2011

Part Number: 5009038

Sheet: 1 of 1

SOLID EDGE DRAWING

DO NOT SCALE

ENG.DWG.NO.
D3184WAD

REVISIONS							
NO	ER	DESCRIPTION	ZONE	DR	CK	APP	MF
1	8007 S	RELEASED					
2		NO CHANGE					
3	10298.3	DELETED IT-4. REVISED NOTES 3 & 7. DELETED DIPS IN CAB REWORK. DELETED NOTE 2. 11/4/97		JBR	DGV	AML	
6	106214	DEL ITEMS 39-44.		PJG	HW	JBR	
7	11712.1	REF TO NOTES CONTINUED ON SHT 3.		EP	DGV	MSL	
8	11710.3	DELETED NOTE 3, NOTE 12, DELETED CAB REWORK VIEW 03/12/99		TCW	HW	JBR	
10		NO CHANGE					

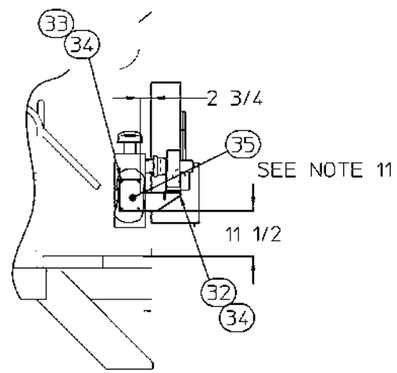

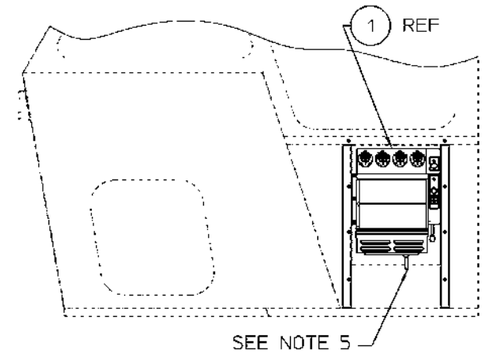

INSIDE VIEW OF CAB

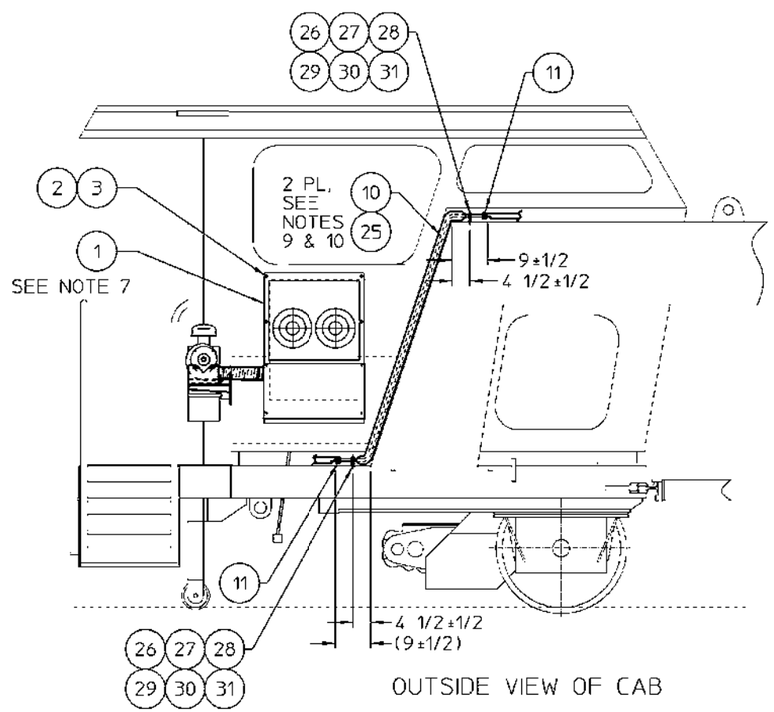

OUTSIDE VIEW OF CAB

A/C INSTALLATION

NOTES:
1) DO NOT USE TEMPLATE INCLUDED WITH A/C UNIT.
4) CUT FLOOR MAT AS NEEDED TO FIT AROUND CHANNEL.
5) CUT FLOOR PLATE AND MAT AS NEEDED TO ROUTE HOSES AND WIRING.
6) INSTALL WALL INSULATION AFTER A/C UNIT IS IN PLACE. FIT INSULATION AROUND UNIT FOR BEST POSSIBLE APPEARANCE.
7) PAINT EVAPORATOR SIDE OF A/C MOUNTING PLATE BEFORE INSTALLATION WITH FLAT BLACK.
8) FORM TUBES AS SHOWN FOR BEST FIT.
9) USE INSULATION (IT-10) ON SUPPLY HOSE AND TUBE. ALSO USE INSULATION ON RETURN TUBE FOR STABILITY.
10) USE BRKT (IT 36) AS TEMPLATE TO DRILL FOUR Ø 11/32 MTG HOLES IN BACK CAB WALL. SEAL AROUND MTG HOLES WHEN INSTALLING BRACKET.
11) USE HARD LINE WHERE PRACTICAL.
13) CENTER PLUG(IT36) ON TWO HOLE PLATE(IT6) AND WELD. SCREW PLUG AND PLATE WELDT INTO RELIEF VALVE(IT5) AS SHOWN AND MOUNT TO ENGINE SKID.

CONTINUED ON SHEET 3.

PLOT SCALE = -20

FIG NO.	ITEM NO.	PART NUMBER	DESCRIPTION AND MATERIAL SIZE (REF.ONLY)	QTY

IMPLIED TOLERANCES
ALL DIMENSIONS ARE IN INCHES-TOLERANCE UNLESS OTHERWISE SPECIFIED

NOMINAL SIZE RANGE		PLUS OR MINUS			NOMINAL SIZE RANGE		PLUS OR MINUS		
OVER	TO	FRACTION	2 PLACE DECIMAL	3 PLACE DECIMAL	OVER	TO	FRACTION	2 PLACE DECIMAL	3 PLACE DECIMAL
-	1	1/64	.01	.003	6	24	3/64	.03	.008
1	6	1/32	.02	.005	24	-	1/16	.05	.010

ANGULAR DIMENSIONS PLUS OR MINUS 1 DEGREE
ALL MACHINED SURFACES TO HAVE A SURFACE FINISH OF 125 MICROINCHES UNLESS OTHERWISE SPECIFIED.

WELDING SPECIFICATION
UNLESS OTHERWISE SPECIFIED ALL WELDS SHOULD ADHERE TO FAIRMONT TAMPER WELDING SPECIFICATION NO. 101

WEIGHT lbs.
3rd ANGLE PROJECTION
DO NOT SCALE
SHEET 1 OF 2

DESCRIPTION (24)
HYD A/C & PRESS INSTL

DRAWN A.DUZTS	DATE 7 MAR 96	MACHINE TYPE MARK IV	CLARK TRANS.
CHECKED DGV	DATE 3-8-96		
APP-ENG A.LINDSEY	DATE MAR 7/96		
APP-MFG	DATE		
LAST ECR 11711 .22	CHECKED DWI		
	DATE 30-Aug-99		

Fairmont Tamper
2601 Edmund Road-Box 20
Cayce-West Columbia,
South Carolina 29171-0020
(803) 822-9160

ENG.DWG.NO.
D3184WAD

THIS DOCUMENT CONTAINS PROPRIETARY INFORMATION AND SUCH INFORMATION MAY NOT BE DISCLOSED TO OTHERS FOR ANY PURPOSE OR USED FOR MANUFACTURING PURPOSES WITHOUT THE WRITTEN PERMISSION OF FAIRMONT TAMPER.

ENG.DWG.NO.
D3184WAD

REVISIONS							
NO	ER	DESCRIPTION	ZONE	DR	CK	APP	MF
1	8907 5	RELEASED					
2		NO CHANGE					
3	10298.3	ADDED ITS-49, 77, 78. DELETED ITS-62 THRU 65. DIM 9 WAS 10. 11/4/97		JBR	DGV	AML	
7		NO CHANGE					
8	11710.3	DELETED ITS. 46, 47, 48, & 49 03/12/99		TCW	HW	JBR	
9	11711.12	PICTORIAL UPDATE. DELETED ITS- 6-8, 36, 45, 51-61, 71-73, 77, 78. 6/16/99		JBR	DGV	AML	
10		NO CHANGE					

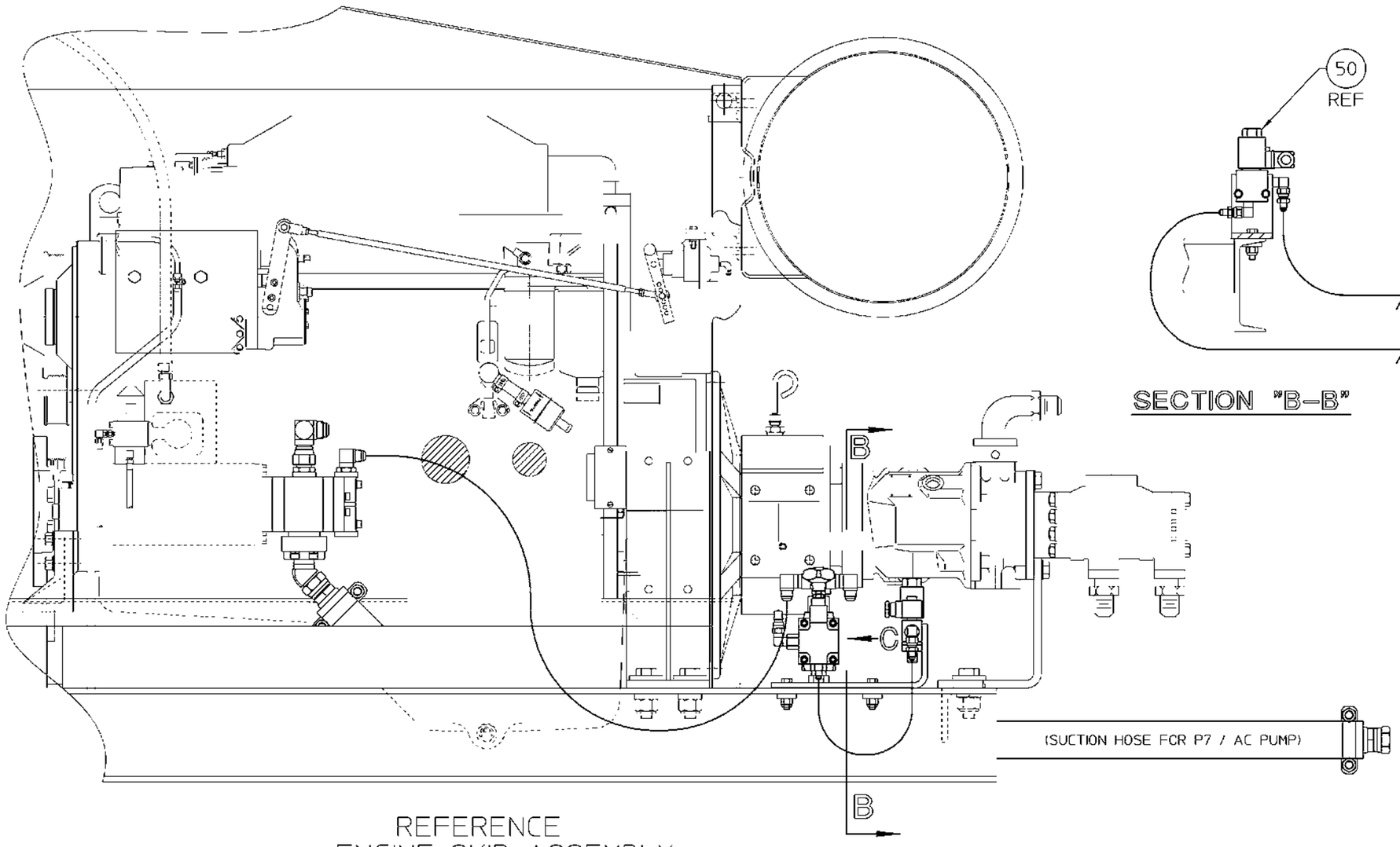

REFERENCE
ENGINE SKID ASSEMBLY
RIGHT SIDE

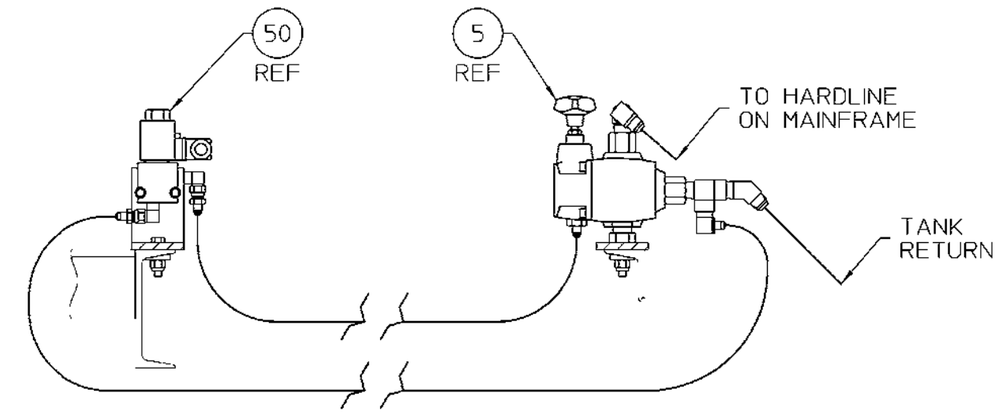

SECTION "B-B"

VIEW C

PLOT SCALE = -4

FIG NO.	ITEM NO.	PART NUMBER	DESCRIPTION AND MATERIAL SIZE (REF.ONLY)	QTY

IMPLIED TOLERANCES
ALL DIMENSIONS ARE IN INCHES-TOLERANCE UNLESS OTHERWISE SPECIFIED

NOMINAL SIZE RANGE		PLUS OR MINUS			NOMINAL SIZE RANGE		PLUS OR MINUS		
OVER	TO	FRACTION	2 PLACE DECIMAL	3 PLACE DECIMAL	OVER	TO	FRACTION	2 PLACE DECIMAL	3 PLACE DECIMAL
-	1	1/64	.01	.003	6	24	3/64	.03	.008
1	6	1/32	.02	.005	24	-	1/16	.05	.010

ANGULAR DIMENSIONS PLUS OR MINUS 1 DEGREE
√ ALL MACHINED SURFACES TO HAVE A SURFACE FINISH OF 125 MICROINCHES UNLESS OTHERWISE SPECIFIED.

WELDING SPECIFICATION

UNLESS OTHERWISE SPECIFIED ALL WELDS SHOULD ADHERE TO FAIRMONT TAMPER WELDING SPECIFICATION NO. 101

WEIGHT lbs.

3rd ANGLE PROJECTION

DO NOT SCALE

SHEET 2 CONT. ON 3

DESCRIPTION (24)
HYD A/C & PRESS INSTL

DRAWN A.DUZTS	DATE 7 MAR 96	MACHINE TYPE MARK IV
CHECKED DGV	DATE 3-8-96	
APP-ENG A.LINDSEY	DATE MAR 7/96	
APP-MFG	DATE	
LAST ECR. 11711 .22	CHECKED DW	ENG.DWG.NO. D3184WAD
	DATE 30-Aug-99	

Fairmont Tamper
2601 Edmund Road-Box 20
Cayce-West Columbia,
South Carolina 29171-0020
(803) 822-9150

THIS DOCUMENT CONTAINS PROPRIETARY INFORMATION AND SUCH INFORMATION MAY NOT BE DISCLOSED TO OTHERS FOR ANY PURPOSE OR USED FOR MANUFACTURING PURPOSES WITHOUT THE WRITTEN PERMISSION OF FAIRMONT TAMPER.

ENG.DWG.NO.
D3184WAD

REVISIONS							
NO	ER	DESCRIPTION	ZONE	DR	CK	APP	MF
1	8007 .5	RELEASED					
2	8379 .1	UPDATED ELECTRICAL DIAG. ADDED ITS 74-76 9 AUG 96	F1 F3	AO	DGV	AML	
3		NO CHANGE					
4	10611 .1	UPDATED PWR DIST. BOX DWG TO SHOW DIN RAIL MTD. CKT BRKRS.	B2	MMS	HW	W.G.	
5	10680 .4	REMOVED BUBBLES 19 & 21; CHANGED NUMBERS ON TERMINAL STRIP	D1 C2	JFB	HW	W.G.	
7	11712.1	ADDED DETAIL "A" AND NOTE 14.		EP	DGV	MSL	
8	11710.3	DELETED ITS. 46, 75, 13, 14, 15, 16, 12, 17. ADDED NOTE 15 03/12/99	B4, C3 C4, E3 F3	TCW	HW	JBR	
9	11711.12	REVISED WIRING DIAGRAM, ADDED IT-79, & NOTE 16. 6/16/99		JBR	DGV	AML	
10	11711	DELETED IT-74 08/17/99		TCW	HW	AML	

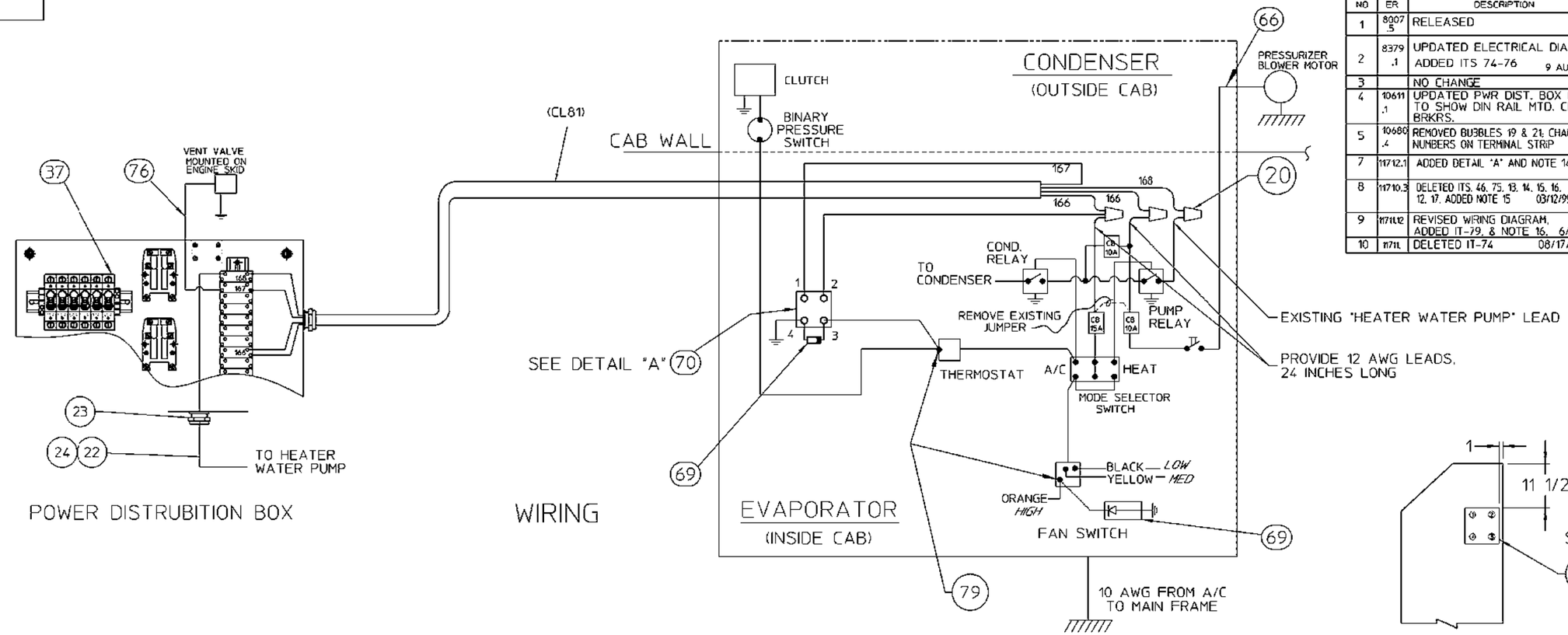

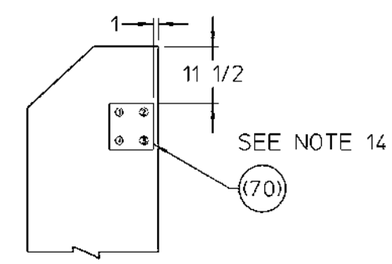

DETAIL-A

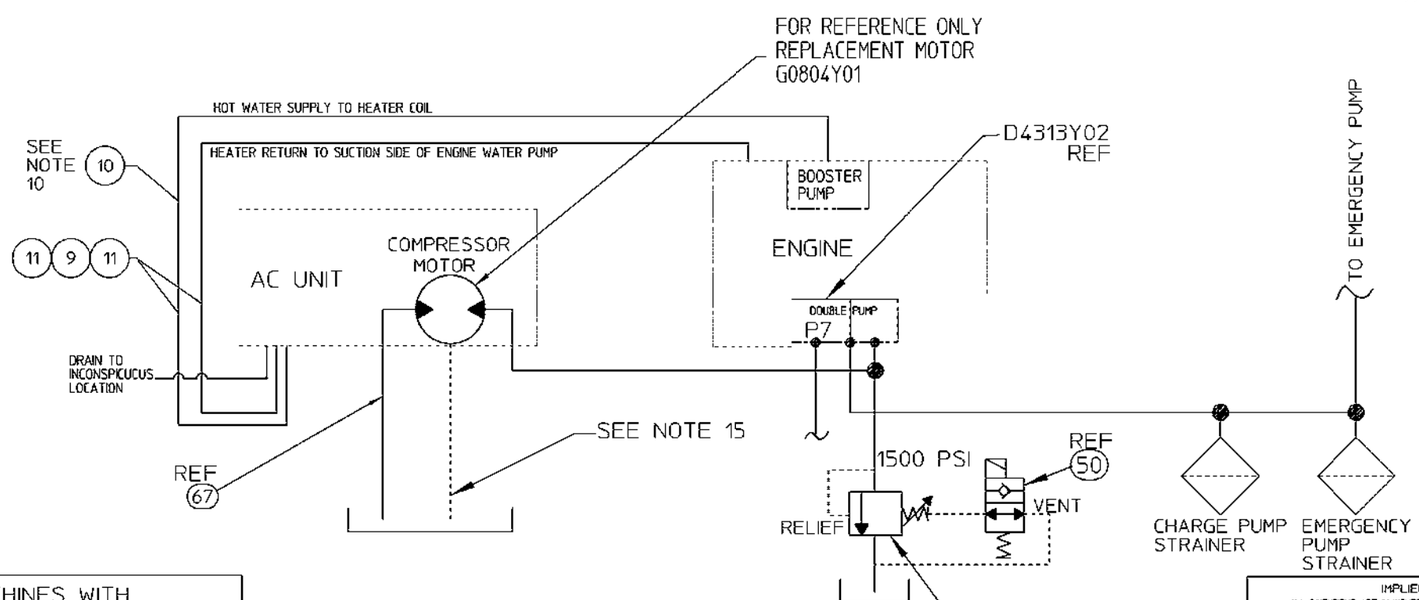

FOR MACHINES WITH
CLARK POWER SHIFT TRANS.

HYDRAULIC/HEATER PIPING

PLOT SCALE -16

NOTES: CONTINUED FROM SHEET 1.

14) REMOVE ACCESS PANEL ON RIGHT HAND SIDE OF EVAPORATOR AND INSTALL RELAY ON CHASIS AS SHOWN. MAKE ALL CONNECTIONS WITH 12AWG WIRE.

15) CONNECT TO REAR TRANSMISSION LUBE MOTOR CASE DRAIN

16) ALL WIRING TO BE DONE IN CAB AREA EXCEPT CONNECTION WITH CL-81 AND WIRING OF VENT VALVE, HEATER WATER PUMP, AND FRAME GROUND.

FIG NO.	ITEM NO.	PART NUMBER	DESCRIPTION AND MATERIAL SIZE (REF.ONLY)	QTY

IMPLIED TOLERANCES
ALL DIMENSIONS ARE IN INCHES-TOLERANCE UNLESS OTHERWISE SPECIFIED

NOMINAL SIZE RANGE OVER	TO	PLUS OR MINUS FRACTION	2 PLACE DECIMAL	3 PLACE DECIMAL	NOMINAL SIZE RANGE OVER	TO	PLUS OR MINUS FRACTION	2 PLACE DECIMAL	3 PLACE DECIMAL
-	1	1/64	.01	.003	6	24	3/64	.03	.008
1	6	1/32	.02	.005	24	-	1/16	.05	.010

ANGULAR DIMENSIONS PLUS OR MINUS 1 DEGREE
ALL MACHINED SURFACES TO HAVE A SURFACE FINISH OF 125 MICROINCHES UNLESS OTHERWISE SPECIFIED.

WELDING SPECIFICATION
UNLESS OTHERWISE SPECIFIED ALL WELDS SHOULD ADHERE TO FAIRMONT TAMPER WELDING SPECIFICATION NO. 101

WEIGHT LBS.
3rd ANGLE PROJECTION
DO NOT SCALE
SHEET 3 CONT. — ON —

DESCRIPTION 124
HYD A/C & PRESS INSTL

DRAWN	DATE	MACHINE TYPE
A.OLZTS	7 MAR 96	MARK IV — CLARK TRANS
CHECKED DGV	DATE 3-8-96	
APP-ENG A.LINDSEY	DATE MAR 7/96	
APP-MFG	DATE	
LAST ECR. 11711 .22	CHECKED hwj DATE 30-Aug-99	

Fairmont Tamper
2401 Edmund Road-Box 20
Cayce-West Columbia, South Carolina 29171-0020
(803) 822-9160

ENG.DWG.NO. D3184WAD

THIS DOCUMENT CONTAINS PROPRIETARY INFORMATION AND SUCH INFORMATION MAY NOT BE DISCLOSED TO OTHERS FOR ANY PURPOSE OR USED FOR MANUFACTURING PURPOSES WITHOUT THE WRITTEN PERMISSION OF FAIRMONT TAMPER.

PARTS LIST

ITEM NO	PART NUMBER	DESCRIPTION	QUANTITY
1	D6456X01	HYD A/C W/PRESSURIZER	1
2	A0036068	3/8-16 X 2 HHCS	8
3	L40387	3/8-16 ESNA NUT	8
~~4~~	~~A4273T12~~	~~CHANNEL, BAR SIZE~~	~~2~~
5	0-3334011-0-03	RELIEF VALVE	REF
~~6~~	~~D4906T14~~	~~TWO HOLE PLATE~~	~~1~~
~~7~~	~~A0037016~~	~~3/8-16 X 1-1/4 CP HHCS~~	~~2~~
~~8~~	~~L41863~~	~~3/8 CAST BEVEL WASHER~~	~~2~~
9	L424832	5/8 HEATER HOSE	90
10	A8962Y03	HOSE INSULATION	54
11	0-3012000-0-02	HOSE CLAMP	8
~~12~~	~~0-3305012-0-03~~	~~Ø 1 1/4 SUCTION HOSE~~	~~REF~~
~~13~~	~~A6058Y02~~	~~SPL FLG BARB BTG 45°~~	~~1~~
~~14~~	~~0-3304142-0-04~~	~~SPLIT FLANGE KIT~~	~~1~~
~~15~~	~~0-3304171-0-24~~	~~TWO BOLT HOSE CLAMP~~	~~4~~
~~16~~	~~G0636Y01~~	~~JIC SUCTION HOSE END~~	~~3~~
~~17~~	~~L411008~~	~~1/2 HP HOSE~~	~~REF~~
~~18~~	~~L411359~~	~~1/2 HP HOSE END~~	~~4~~
~~19~~	~~L411083~~	~~#12/4 SO CABLE~~	~~40~~
20	D0090Y04	WIRE NUT 82	3
~~21~~	~~L40971~~	~~3/4 IN ST STRAIN RELIEF~~	~~1~~
22	A9297Y04	14 AWG COPPER WIRE	20
23	L40818	1/2 IN ST STR REL .4-.5	1
24	B1623Y01	1/4 CORRUGATED CONDUIT	20
25	C8444T86	TUBE11/160Dx.56Dx6.6FT	2
26	0-3305025-0-02	HYD LINE CLAMPS	2
27	0-3305026-0-06	SPLIT BUSHING,5/8 TUBE	4
28	0-3305026-0-12	STACKING NUT	6
29	0-3305022-0-20	WELD ADAPTER	6
30	A0036030	5/16-18 X 1/2 HHCS	12
31	A0061009	5/16 MED LOCK WASHER	6
32	A0036034	5/16-18 X 1 HHCS	4
33	A0036035	5/16-18 X 1 1/4 HHCS	4

ASSEMBLY IDENTIFIER

MK IV W/CLARK TRANS

ASSEMBLY DESCRIPTION

REVISIONS

NO	ER	DESCRIPTION	DR	CK	APP	MF
1	8007.5	RELEASED				
2	8379.1	IT 12 QTY WAS 15, IT 13 WAS 0-3304145-0-04, IT 15 WAS L425247 & QTY WAS 2, IT 16 WAS L411367 & QTY WAS 1, IT 17 QTY WAS 60, DELETED IT 18, IT 19 WAS 0-3212004-0-12, IT 21 WAS L424107. 9 AUG 96	AO	DGV	AML	
3	10298.3	DELETED ITS-4, 12, & 17. 11/5/97	JBR	DGV	AML	
4		NO CHANGE				
5	10680.4	DELETED ITS-19, 21	JFB	HW	W.G.	
7		NO CHANGE	JFB			
8	11710.3	DELETED ITS. 13. 14. 15. 16 03/12/99	TCW	HW	JBR	
9	11711.12	IT-3 QTY WAS 10. IT-5 QTY WAS 1. DELETED ITS-6-8. 6/16/99	JBR	DGV	AML	
10		NO CHANGE				

SHEET 1 CONT ON 2

LAST ECR. 11711.22 CHECKED hwl DATE 30-Aug-99

DWG NO D3184WAD

Fairmont Tamper™
2401 Edmund Road-Box 20
Cayce-West Columbia,
South Carolina 29171-0020
(803) 822-9160

DWG NO D3184WAD

SHEET 1 CONT ON 2

DESCRIPTION (24) HYD A/C & PRESS INSTL

DRAWN A.OUZTS DATE 7 MAR 96

CHECKED DGV DATE 3-8-96

APP A.LINDSEY DATE 7 MAR 96

APP DATE

PARTS LIST

ASSEMBLY IDENTIFIER

ITEM NO	PART NUMBER	DESCRIPTION	QUANTITY
34	L41582	5/16-18 ESNA NUT	8
35	D7154YAA	BLOWER MTG BRKT	1
~~36~~	~~L420111~~	~~3/4 MNPT PLUG~~	~~1~~
37	C9678Y06	40 AMP DIN RAIL CB	1
~~38~~	~~C6925Y06~~	~~CB NAMEPLATE~~	~~1~~
~~39~~	~~D7139Y01~~	~~CUTOUT COVER~~	~~1~~
~~40~~	~~A0074001~~	~~1/4 X 3/4 TEKS~~	~~13~~
~~41~~	~~A0036063~~	~~3/8-16 X 1 HHCS~~	~~5~~
~~42~~	~~0-3011001-0-01~~	~~3/8-16 ESNA NUT~~	~~5~~
~~43~~	~~A0059003~~	~~3/8 FLAT WASHER~~	~~5~~
~~44~~	~~A0061008~~	~~1/4 MEDIUM LOCK WASHER~~	~~15~~
~~45~~	~~D7148Y01~~	~~VALVE MTG PLATE~~	~~1~~
~~46~~	~~0-3335012-0-01~~	~~FLOW REGULATOR~~	~~1~~
~~47~~	~~A0036069~~	~~3/8-16 X 2 1/4 HHCS~~	~~2~~
~~48~~	~~A0061010~~	~~3/8 MEDIUM LOCK WASHER~~	~~2~~
~~49~~	~~L420004~~	~~1/2 MP - JIC 90°~~	~~3~~
50	A0729Y06	VALVE, 2 WAY, SOL.OP.	REF
~~51~~	~~A0036009~~	~~1/4 20 X 2 HHCS~~	~~2~~
~~52~~	~~A0059001~~	~~1/4 MEDIUM FLAT WASHER~~	~~4~~
~~53~~	~~L40361~~	~~FITTING 1/2 FP 3/4 MP~~	~~2~~
~~54~~	~~L421708~~	~~FTG 3/8 ORB-1/4 JIC ST.~~	~~1~~
~~55~~	~~0-3230020-0-01~~	~~DIN CONN HYD VALVE~~	~~1~~
~~56~~	~~A4406Y04~~	~~TRANSZORB BLOCK (HYD)~~	~~1~~
~~57~~	~~0-3304017-0-02~~	~~FTG 3/8 ORB-1/4JIC 90°~~	~~1~~
~~58~~	~~L420100~~	~~1/2 MP-FP-FP TEE~~	~~1~~
~~59~~	~~L40056~~	~~TEE 1/2 MP FP FP~~	~~1~~
~~60~~	~~0-3304018-0-02~~	~~FTG 3/8ORB 3/8JIC LG.90°~~	~~1~~
~~61~~	~~0-3304132-0-01~~	~~FTG 3/8 JIC SW 1/4 JIC~~	~~1~~
~~62~~	~~L423104~~	~~HOSE MEDIUM PRESSURE 1/4~~	~~3~~
~~63~~	~~L411366~~	~~HOSE END, 4JIC SW~~	~~2~~
~~64~~	~~L411006~~	~~HP HOSE 1/4 (FT)~~	~~2~~
~~65~~	~~L420000~~	~~1/4 HP HOSE END~~	~~2~~
66	L411085	CABLE 14/2 TYPE SO	6

REVISIONS

NO	ER	DESCRIPTION	DR	CK	APP	MF
1	8007.5	RELEASED				
2	8379.1	IT 66 QTY WAS 50 9 AUG 96	AO	DGV	AML	
3	10298.3	IT-49 QTY WAS 2. IT-53 WAS L420005. IT-58 WAS 0-3304057-0-03. IT-59 WAS 0-3304132-0-02. DELETED ITS-62 THRU 65. 11/5/97	JBR	DGV	AML	
4	10611.1	DELETED IT.38 & IT.37 WAS 0-3105021-0-09.	MMS	HW	W.G.	
6	10621.4	DELETED ITEMS 39-44.	PJG	HW	JBR	
7		NO CHANGE				
8	11710.3	DELETED ITS. 46, 47, 48, 03/12/99	TCW	HW	JBR	
9	11711.12	DELETED ITS-36, 45,49, 51-61 IT-50 QTY WAS 1 6/16/99	JBR	DGV	AML	
10		NO CHANGE				

MK IV W/CLARK TRANS

ASSEMBLY DESCRIPTION

ER

DR

CK

APP

MF

Fairmont Tamper™
2401 Edmund Road-Box 20
Cayce-West Columbia,
South Carolina 29171-0020
(803) 822-9160

DWG NO D3184WAD

SHEET 2

CONT ON 3

DESCRIPTION (24) HYD A/C & PRESS INSTL

DRAWN A.OUZTS

DATE 7 MAR 96

CHECKED DGV

DATE 3-8-96

APP A.LINDSEY

DATE MAR 7/96

APP

DATE

SHEET 2 CONT ON 3

LAST ECR. 11711.22

CHECKED hwl

DATE 30-Aug-99

DWG NO D3184WAD

PARTS LIST

ITEM NO	PART NUMBER	DESCRIPTION	QUANTITY
~~67~~	~~L423105~~	~~1/2 MP HOSE~~	~~REF~~
~~68~~	~~L411361~~	~~1/2 JIC SW HOSE END~~	~~2~~
~~71~~	~~L420087~~	~~1/4 NPT X 90°~~	~~1~~
~~72~~	~~L41228~~	~~1/4 MALE QUICK DISC.~~	~~1~~
~~73~~	~~0-3304009-0-17~~	~~1/4 ORB X 1/4 NPTF FTG~~	~~1~~
~~74~~	~~0-3304015-0-13~~	~~FTG 1 1/4 JIC TEE~~	~~2~~
~~75~~	~~L420270~~	~~O RING BOSS/37° FLARE-90°~~	~~1~~
76	L411089	CABLE 16/2 TYPE SO	25
~~77~~	~~L411376~~	~~FTG. 1/2MP JIC ST~~	~~2~~
~~78~~	~~L423157~~	~~1/2 MP/1/4 JIC 90° ADAP.~~	~~1~~
79	0-3255012-0-01	PIGGYBACK TERMINAL	2

ASSEMBLY IDENTIFIER

MK IV W/CLARK TRANS

ASSEMBLY DESCRIPTION

ER

DR

CK

APP

MF

REVISIONS

NO	ER	DESCRIPTION	DR	CK	APP	MF
1	8007.5	RELEASED				
2	8379.1	ITS 67 QTY WAS 50 9 AUG 96 DEL IT 68 ADDED ITS 74-76	AO	DGV	AML	
3	10298.3	DELETED IT-67. ADDED ITS-77 & 78. 11/9/97	JBR	DGV	AML	
7		NO CHANGE				
8	11710.3	DELETED IT. 75 03/12/99	TCW	HW	JBR	
9	11711.12	DELETED ITS-71, 72, 73, 77, 78. ADDED IT-79. 6/16/99	JBR	DGV	AML	
10	11711.	DELETED IT. 74 08/17/99	TCW	HW	AML	

SHEET 3 CONT ON -

LAST ECR. 11711.22

CHECKED hwl DATE 30-Aug-99

DWG NO D3184WAD

Fairmont Tamper™
2401 Edmund Road-Box 20
Cayce-West Columbia,
South Carolina 29171-0020
(803) 822-9160

DWG NO D3184WAD

SHEET 3

CONT ON -

DESCRIPTION (24) HYD A/C & PRESS INSTL

DRAWN A.OUZTS

DATE 7 MAR 96

CHECKED DGV

DATE 3-8-96

APP A.LINDSEY

DATE MAR 7/96

APP

DATE

PARTS LIST

ITEM NO	PART NUMBER	DESCRIPTION		HYD. ORIG METAL FAN	HYD. PANCAKE FAN	ENG. MT. COMPRESSOR	HYD. DIRECT DRIVE	ROOF MOUNT A/C PARTS D6167X01							
				ASSEMBLY IDENTIFIER											
				QUANTITY											
1	G1688P01	FAN MOTOR	VISIONAIRE 106-8002	✓	N/A	N/A	N/A	✓			CONDENCER				
2	G1688P02	FAN BLADE	VISIONAIRE 106-8004	✓	N/A	N/A	N/A	✓			CONDENCER				
3	G1688P03	CONDENSOR COIL	VISIONAIRE 109-2647	✓	✓	✓	✓	N/A			CONDENCER				
4	G1688P04	FAN GUARD	VISIONAIRE 106-8000	✓	N/A	N/A	N/A	N/A			CONDENCER				
5	G1688P05	AXLE, FAN MOTOR	VISIONAIRE 106-8012	✓	N/A	N/A	N/A	N/A			CONDENCER				
6	G1688P06	FAN MOTOR (PANCAKE)	VISIONAIRE 106-8012	N/A	✓	✓	✓	✓			CONDENCER				
7	G1688P07	COMPRESSOR 24V	VISIONAIRE 203-4506	✓	✓	N/A	✓	N/A			CONDENCER				
8	G1688P08	DRIER	VISIONAIRE 107-8412	✓	✓	✓	✓	N/A			CONDENCER				
9	G1688P09	EVAPORATOR C/B 10 AMP	VISIONAIRE 104-1043	✓	✓	✓	✓	N/A			CONDENCER				
10	G1688P10	RELAY	VISIONAIRE 104-1704	✓	✓	✓	✓	N/A			CONDENCER				
11	G1688P11	CONDENSOR C/B 15 AMP	VISIONAIRE 104-1042	✓	✓	✓	✓	N/A			CONDENCER				
12	G1688P12	BINARY PRESS SWITCH	VISIONAIRE 104-R7100	✓	✓	✓	✓	N/A			CONDENCER				
13	G1688P13	DRIER, HORIZ W/SCHRADER PORT	VISIONAIRE 203-8413	N/A	N/A	✓	N/A	N/A			CONDENCER				
14	0-3525008-0-01	CLUTCH, 24V, 6"	VISIONAIRE 203-141150	N/A	N/A	✓	N/A	✓			CONDENCER				
15	Z753102-002	COMPRESSOR, YORK	VISIONAIRE 203-8220-E	N/A	N/A	✓	N/A	✓			CONDENCER				
16	G1688P16	BLOWER MOTOR 24V	VISIONAIRE 106-9204R	✓	✓	✓	✓	N/A			PRESSURIZER				
17	G1688P17	HUMP HOSE REDUCER (3 TO 4)	VISIONAIRE 105-0353	✓	✓	N/A	✓	N/A			PRESSURIZER				
18	G1688P18	Ø 3"DEFROSTER HOSE (specify length of 48 inches)	VISIONAIRE 105-5530-1	✓	✓	✓	✓	N/A			PRESSURIZER				
19	G1688P19	FILTER ELEMENT	VISIONAIRE 200-8020	✓	✓	N/A	✓	N/A			PRESSURIZER				
20	G1688P20	ON/OFF TOGGLE SW	VISIONAIRE 104-1010	✓	✓	✓	✓	✓			PRESSURIZER				
21	G1688P21	FILTER ELEMENT, HORIZ	VISIONAIRE 200-8023	N/A	N/A	✓	N/A	N/A			PRESSURIZER				
22	G1688P22	COUPLING HALF, MOTOR	VISIONAIRE 204-1202	N/A	N/A	N/A	✓	N/A			CONDENCER				
23	G1688P23	COUPLING HALF, COMP.	VISIONAIRE 204-1203	N/A	N/A	N/A	✓	N/A			CONDENCER				
24	G1688P24	COUPLING, RUBBER ELEM.	VISIONAIRE 204-1204	N/A	N/A	N/A	✓	N/A			CONDENCER				
25	G1688P25	RELAY 24V	VISIONAIRE 104-1704	✓	✓	✓	✓	✓			WATER HEATER				
26	G1688P26	DRIER - NEW STYLE	VISIONAIRE 107-8022	N/A	N/A	N/A	N/A	✓							
27	G1688P27	TRIM - 46.75"	VISIONAIRE 102-1046	N/A	N/A	N/A	N/A	✓							
28	G1688P28	COVER ASSEMBLY PAINTED	VISIONAIRE 100-1003	N/A	N/A	N/A	N/A	✓							
29	G1688P29	THUMB SCREW	VISIONAIRE 201-0014	N/A	N/A	N/A	N/A	✓							
30	G1688P30	GROMMET .5"	VISIONAIRE 102-1014	N/A	N/A	N/A	N/A	✓							
31	G1688P31	INSULATION - BASE .75"	VISIONAIRE 102-2736.75	N/A	N/A	N/A	N/A	✓							
32	G1688P32	CONSOLE MOUNT PLATE	VISIONAIRE 100-1010	N/A	N/A	N/A	N/A	✓							
33	G1688P33	REAR MOUNT CHANNEL	VISIONAIRE 100-1011	N/A	N/A	N/A	N/A	✓							

REVISIONS

NO	ER	DESCRIPTION	DR	CK	APP	MF
1	8748.1	RELEASED				
2	10621 .1	ADDED COLUMN FOR ENGINE MOUNTED COMPRESSOR MODEL. ADDED ITS-13, 14, 15, & 21. 3/4/98	JBR	DGV	AML	
3	10289 .112	ADDED ITEMS 22-24 AND "HYD. DIRECT DRIVE" COLUMN; IT-18 V/A NO. WAS 105-5530-12 & ADDED LENGTH NOTE)	AML	HW	AML	
4	11538.1	ITEM 14 WAS G1688P14 AND ITEM 15 WAS G1688P15. ADDED ITEMS 25-33, "ROOF MOUNT A/C PARTS D6167X01" COLUMN AND PAGES 2 AND 3. 11-4-98	SAF	DGV	HAWK	
5		NO CHANGE				

ASSEMBLY DESCRIPTION									
ER									
DR									
CK									
APP									
MF									

SHEET 1 | CONT ON – | LAST ECR. 12463 .6 | CHECKED hwi | DATE 28-Mar-02

SHEET 1 | CONT ON – | DESCRIPTION (24) WALL MOUNT A/C PARTS | DRAWN A.OUZTS | DATE 14 APR 97 | CHECKED DGV | DATE 4/18/98 | APP A.Lindsey | DATE 4/15/98 | APP | DATE

Fairmont Tamper™
2401 Edmund Road-Box 20
Cayce-West Columbia,
South Carolina 29171-0020
(803) 822-9160

PARTS LIST

ITEM NO	PART NUMBER	DESCRIPTION		ASSEMBLY IDENTIFIER / QUANTITY										
34	G1688P34	CONSOLE SCREWS	VISIONAIRE 201-1514	N/A	N/A	N/A	N/A	✓						
35	G1688P35	PLASTIC CONSOLE	VISIONAIRE 103-1001	N/A	N/A	N/A	N/A	✓						
36	G1688P36	LOUVER	VISIONAIRE 103-2001	N/A	N/A	N/A	N/A	✓						
37	G1688P37	NAMEPLATE	VISIONAIRE 205-2002	N/A	N/A	N/A	N/A	✓						
38	G1688P38	TOGGLE SWITCH - MODE	VISIONAIRE 104-1011	N/A	N/A	N/A	N/A	✓						
39	G1688P39	TOGGLE SWITCH - FAN SPEED	VISIONAIRE 104-1021	N/A	N/A	N/A	N/A	✓						
40	G1688P40	FILTER BRACKET - ANGLE	VISIONAIRE 100-1012	N/A	N/A	N/A	N/A	✓						
41	G1688P41	FILTER BRACKET - CHANNEL	VISIONAIRE 100-1013	N/A	N/A	N/A	N/A	✓						
42	G1688P42	FILTER SNAP CLIPS	VISIONAIRE 201-3008	N/A	N/A	N/A	N/A	✓						
43	G1688P43	FILTER - RETURN AIR	VISIONAIRE 200-0617	N/A	N/A	N/A	N/A	✓						
44	G1688P44	SNAP BUSHING	VISIONAIRE 103-0114	N/A	N/A	N/A	N/A	✓						
45	G1688P45	GROMMET 5/8"	VISIONAIRE 102-1038	N/A	N/A	N/A	N/A	✓						
46	G1688P46	HOSE-LIQUID COND\DRIER	VISIONAIRE 105-2906	N/A	N/A	N/A	N/A	✓						
47	G1688P47	HOSE-LIQUID DRIER\EXP.VAL	VISIONAIRE 105-0406	N/A	N/A	N/A	N/A	✓						
48	G1688P48	HIGH PRESSURE SWITCH	VISIONAIRE 104-1030	N/A	N/A	N/A	N/A	✓						
49	G1688P49	CIRCUIT BREAKER 20 AMP 24V	VISIONAIRE 104-1041	N/A	N/A	N/A	N/A	✓						
50	G1688P50	DRIER MOUNT	VISIONAIRE 100-1006	N/A	N/A	N/A	N/A	✓						
51	G1688P51	DRAIN TUBE ASSEMBLY-RT	VISIONAIRE 105-3538R	N/A	N/A	N/A	N/A	✓						
52	G1688P52	DRAIN HOSE - 32'	VISIONAIRE 105-3038	N/A	N/A	N/A	N/A	✓						
53	G1688P53	BASE WELDMENT ASSEMBLY	VISIONAIRE 100-1001	N/A	N/A	N/A	N/A	✓						
54	G1688P54	DRAIN TUBE ASSEMBLY-LT	VISIONAIRE 105-3538L	N/A	N/A	N/A	N/A	✓						
55	G1688P55	FILTER - FRESH AIR	VISIONAIRE 200-0714	N/A	N/A	N/A	N/A	✓						
56	G1688P56	EVAPORATOR COIL SCREEN	VISIONAIRE 200-1315	N/A	N/A	N/A	N/A	✓						
57	G1688P57	SIDE FILTER COVER PRESSURIZ	VISIONAIRE 100-3010	N/A	N/A	N/A	N/A	✓						
58	G1688P58	EVAPORATOR COIL	VISIONAIRE 109-1340	N/A	N/A	N/A	N/A	✓						
59	G1688P59	EXPANSION VALVE	VISIONAIRE 108-0134	N/A	N/A	N/A	N/A	✓						
60	G1688P60	CLAMP	VISIONAIRE 201-2058	N/A	N/A	N/A	N/A	✓						
61	G1688P61	EVAPORATOR BOX - TOP	VISIONAIRE 100-1005	N/A	N/A	N/A	N/A	✓						
62	G1688P62	LOW PRESSURE SWITCH	VISIONAIRE 104-1031	N/A	N/A	N/A	N/A	✓						
63	G1688P63	DRIP PAN	VISIONAIRE 103-0109	N/A	N/A	N/A	N/A	✓						
64	G1688P64	CONDENSER COIL	VISIONAIRE 109-0647	N/A	N/A	N/A	N/A	✓						
65	G1688P65	SOFT SPONGE - 6 3/4"	VISIONAIRE 102-2001	N/A	N/A	N/A	N/A	✓						
66	G1688P66	CONDENSER BRACKET	VISIONAIRE 100-1007	N/A	N/A	N/A	N/A	✓						
				HYD. ORIG METAL FAN	HYD. PANCAKE FAN	ENG. MT. COMPRESSOR	HYD. DIRECT DRIVE	ROOF MOUNT A/C PARTS D61617X01						

REVISIONS

NO	ER	DESCRIPTION	DR	CK	APP	MF
4	11538.1	RELEASED	SAF			
5	12463	NO CHANGE				

ASSEMBLY DESCRIPTION

ER										
DR										
CK										
APP										
MF										

SHEET 2 / CONT ON 3 / LAST ECR. 12463 .6 / CHECKED hwi / DATE 28-Mar-02

SHEET 2 / CONT ON 3 / DESCRIPTION (24) WALL MOUNT A/C PARTS / DRAWN SAF / DATE 11/4/98 / CHECKED DGV / DATE 11/5/98 / APP K. HAWKINS / DATE 11/5/98 / APP / DATE

Fairmont Tamper™
2401 Edmund Road-Box 20
Cayce-West Columbia,
South Carolina 29171-0020
(803) 822-9160

PARTS LIST

ITEM NO	PART NUMBER	DESCRIPTION		HYD. ORIG METAL FAN	HYD. PANCAKE FAN	ENG. MT. COMPRESSOR	HYD. DIRECT DRIVE	ROOF MOUNT A/C PARTS D6167X01						
				ASSEMBLY IDENTIFIER										
				QUANTITY										
67	G1688P67	BLOWER ASSEMBLY 24V	VISIONAIRE 106-3024	N/A	N/A	N/A	N/A	✓						
68	G1688P68	AIR SEAL - RT	VISIONAIRE 100-1107	N/A	N/A	N/A	N/A	✓						
69	G1688P69	AIR SEAL - LT	VISIONAIRE 100-1207	N/A	N/A	N/A	N/A	✓						
70	G1688P70	HOLE LINER - HEATER FTG	VISIONAIRE 102-3000	N/A	N/A	N/A	N/A	✓						
71	G1688P71	HEATER CORE	VISIONAIRE 109-1400	N/A	N/A	N/A	N/A	✓						
72	G1688P72	HEATER CORE BRACKET - LT	VISIONAIRE 100-1400L	N/A	N/A	N/A	N/A	✓						
73	G1688P73	HEATER CORE BRACKET - RT	VISIONAIRE 100-1400R	N/A	N/A	N/A	N/A	✓						
74	G1688P74	HEATER CORE FITTING	VISIONAIRE 201-7650R	N/A	N/A	N/A	N/A	✓						
75	G1688P75	SILICONE HOSE 11"	VISIONAIRE 105-1158	N/A	N/A	N/A	N/A	✓						
76	G1688P76	SILICONE HEATER HOSE CLAMPS	VISIONAIRE 201-0010	N/A	N/A	N/A	N/A	✓						
77	G1688P77	HEATER NIPPLES 5/8" X 5/8"	VISIONAIRE 201-1908	N/A	N/A	N/A	N/A	✓						
78	G1688P78	PRESSURIZER RING	VISIONAIRE 100-4812R	N/A	N/A	N/A	N/A	✓						
79	G1688P79	THERMOSTAT - FIXED	VISIONAIRE 104-1002	N/A	N/A	N/A	N/A	✓						
80	G1688P80	CONDENSER FOAM SEAL	VISIONAIRE 102-1034-90	N/A	N/A	N/A	N/A	✓						
81	G1688P81	9PC. EVAP. CASE INSUL.	VISIONAIRE 102-9000	N/A	N/A	N/A	N/A	✓						
82	G1688P82	THERMOSTAT TUBE	VISIONAIRE 105-1002	N/A	N/A	N/A	N/A	✓						
83	G1688P83	WIRE LOOM CLAMP	VISIONAIRE 201-1000	N/A	N/A	N/A	N/A	✓						
84	G1688P84	SQUARE FOAM	VISIONAIRE 102-1.251-5	N/A	N/A	N/A	N/A	✓						
85	G1688P85	WIRE HARNESS - COND. FAN 24V	VISIONAIRE 202-1002	N/A	N/A	N/A	N/A	✓						
86	G1688P86	WIRE HARNESS - MAIN	VISIONAIRE 202-1005	N/A	N/A	N/A	N/A	✓						
87	G1688P87	WIRE HARNESS - FAN	VISIONAIRE 202-1006	N/A	N/A	N/A	N/A	✓						
88	G1688P88	WIRE HARNESS - SWITCHES	VISIONAIRE 202-1007	N/A	N/A	N/A	N/A	✓						
89	G1688P89	WIRE HARNESS - JUMPER	VISIONAIRE 202-1008	N/A	N/A	N/A	N/A	✓						
90	G1688P90	BELT, HYD MTR TO COMPRES	VISIONAIRE 102-17370	N/A	N/A	N/A	N/A	✓		2 REQD.				
91														
92														
93														
94														
95														
96														

REVISIONS

NO	ER	DESCRIPTION	DR	CK	APP	MF
4	11538.1	RELEASED	SAF			
5	12463	ADDED ITEM 90	HAWK			

ASSEMBLY DESCRIPTION

ER									
DR									
CK									
APP									
MF									

Fairmont Tamper™
2401 Edmund Road-Box 20
Cayce-West Columbia,
South Carolina 29171-0020
(803) 822-9160

SHEET 3 | CONT ON - | LAST ECR. 12463 .6 | CHECKED hwi | DATE 28-Mar-02

SHEET 3 | CONT ON - | DESCRIPTION (24) WALL MOUNT A/C PARTS | DRAWN SAF | DATE 11/4/98 | CHECKED DGV | DATE 11/5/98 | APP K. HAWKINS | DATE 11/5/98 | APP | DATE

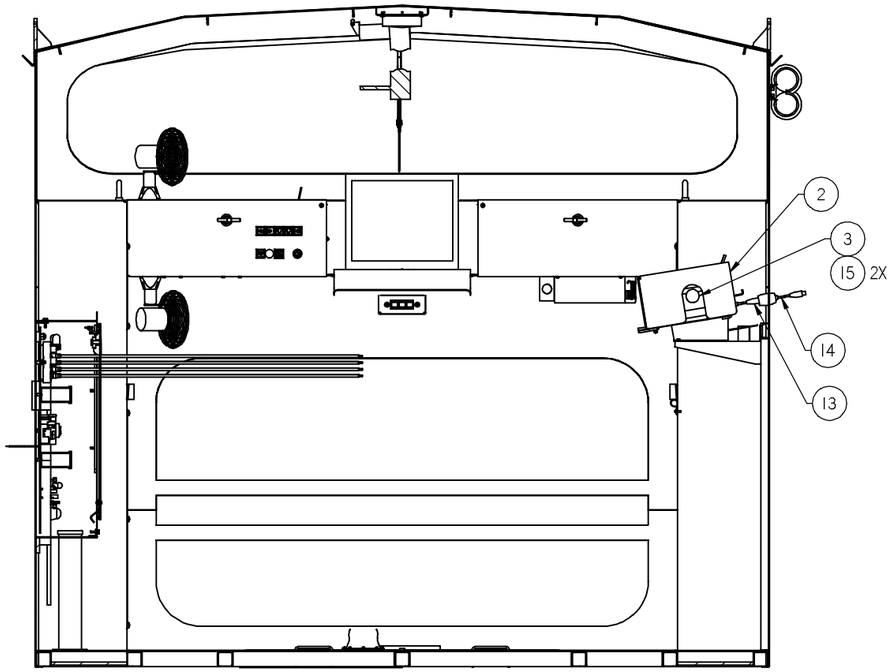

SECTION A-A

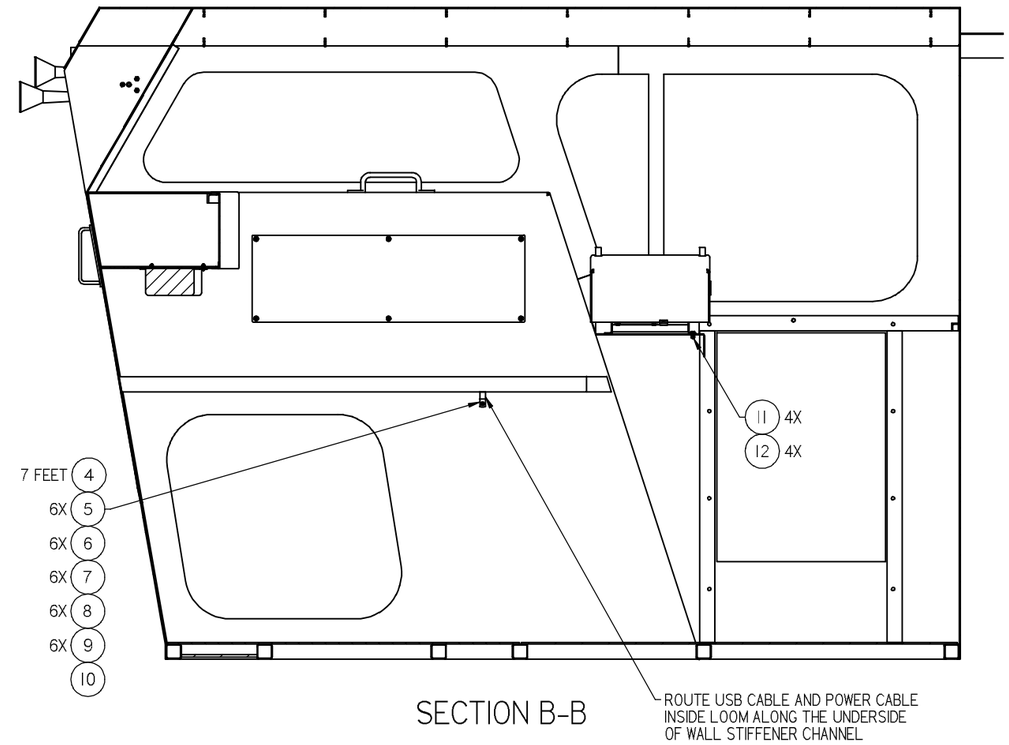

SECTION B-B

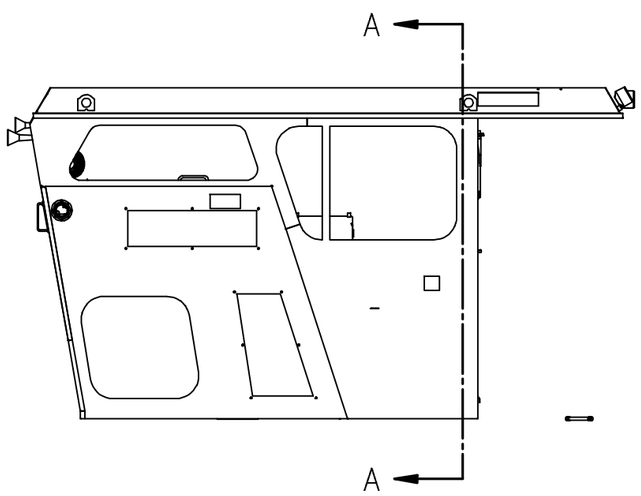

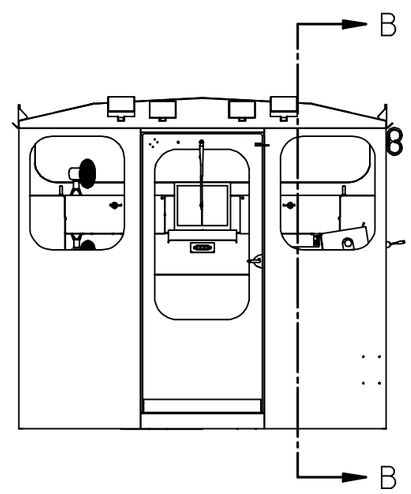

NOTES:
1. USE PRINTER USB CABLE AND EXTENSION CABLE TO CONNECT PRINTER TO ANY USB PORT ON JAM BOX.

2. USE POWER EXTENSION CORD TO CONNECT PRINTER POWER TO TO RECEPTACLE ON POWER INVERTER.

Item Number	Part Number	Description	Quantity
2	4017528	PRINTER STAND W/ COVER	1
3	351118-1	PRINTER	1
4*	B1623Y04	3/4 CORG. CONDUIT (FT)	7
5	0-3202000-0-19	HOSE CLAMP	6
6	A1563Y05	#10-32 THREADED INSERT	6
7	F001050	WROUGHT WASHER - .188	6
8*	F025837	LOCK WASHER #10	6
9	F010824	RD HD MS #10-32 X .50	6
10*	H5964Y01	ELECT EXT CORD	1
11	F002355	HHCS .250-20X.75	4
12	F004606	HEX ELASTIC STOP NUT .250-20	4
13	4010267	USB A MALE TO USB B MALE, 6 FT	1
14	4010266	USB ACTIVE EXT CABLE, 16 FT	1
15	A8962Y01	HOSE INSULATION	2

CONFIDENTIAL

© COPYRIGHT 2001 HARSCO TRACK TECHNOLOGIES. THIS DRAWING OR DOCUMENT IS THE PROPERTY OF HARSCO TRACK TECHNOLOGIES AND EMBODIES CONFIDENTIAL INFORMATION, TRADE SECRET INFORMATION, AND/OR KNOW-HOW THAT IS THE PROPERTY OF HARSCO TRACK TECHNOLOGIES. BY ACCEPTING THIS DRAWING OR DOCUMENT, THE RECIPIENT AGREES (1) NOT TO PROVIDE, OR OTHERWISE MAKE AVAILABLE, THE DRAWING OR DOCUMENT, OR ANY INFORMATION OR KNOW-HOW EMBODIED THEREIN, TO ANY THIRD PARTY AND (2) NOT TO REPRODUCE OR USE THE DRAWING OR DOCUMENT TO MANUFACTURE ANY APPARATUS OR DEVICE, WITHOUT THE PRIOR WRITTEN AUTHORIZATION OF HARSCO TRACK TECHNOLOGIES.

SOLID EDGE DRAWING

IMPLIED TOLERANCES

ALL DIMENSIONS ARE IN INCHES - TOLERANCE UNLESS OTHERWISE SPECIFIED

NOMINAL SIZE RANGE OVER	TO	HIGH PLUS OR MINUS 2 PLACE DECIMAL	3 PLACE DECIMAL	NOMINAL SIZE RANGE OVER	TO	METRIC PLUS OR MINUS 1 PLACE DECIMAL	2 PLACE DECIMAL
0	6	.03	.005	0	150	.8	.13
6	24	.04	.008	150	600	1.0	.20
24	-	.06	.010	-	600	1.5	.25

UNLESS OTHERWISE SPECIFIED ALL MACHINED SURFACES WILL HAVE A SURFACE FINISH OF 125 MICRONCHES ANGULAR TOLERANCE OF ±.50° CONCENTRICITY WITHIN .010

THIRD ANGLE PROJECTION

UNLESS OTHERWISE SPECIFIED ALL WELDS SHOULD ADHERE TO THE LATEST HTT WELDING SPECIFICATION 101

CHANGE	R/L	REVISION	DATE
101961	A	RELEASE	8/5/08
102350	B	ADDED IT-15	2/20/09

Description: PRINTER INSTALLATION

Drawing Number: PRINTER INSTALLATION

Machine Type

Model: 4017998.asm

Weight: Scale: 1:4

Mat'l

Drawn: jrowell Date Drawn: 8/5/08

APVD Dwg: JBR APVD Ctlng: BCB

HTT
Harsco Track Technologies
Harsco
Columbia, SC

Part Number: 4017998 Size: D Sheet: 1 of 1

Plotted by hwiggins on 9/9/2010 4017998.dft

ENG.DWG.NO.
D9702XAA

REVISIONS							
NO	ER	DESCRIPTION	ZONE	DR	CK	APP	MF
1	8143.1	NEW RELEASE		W.G.	JA	GJ	
2	11665.1	REDISIGNED TO MKIV 98.		EP	HW	MSL	
3	12429.	IT 1 WAS ATTACHED TO BOTTOM OF RIGHT CONTROL PANEL. IT 4 WAS A0055009.		BV	HJW	JBR	

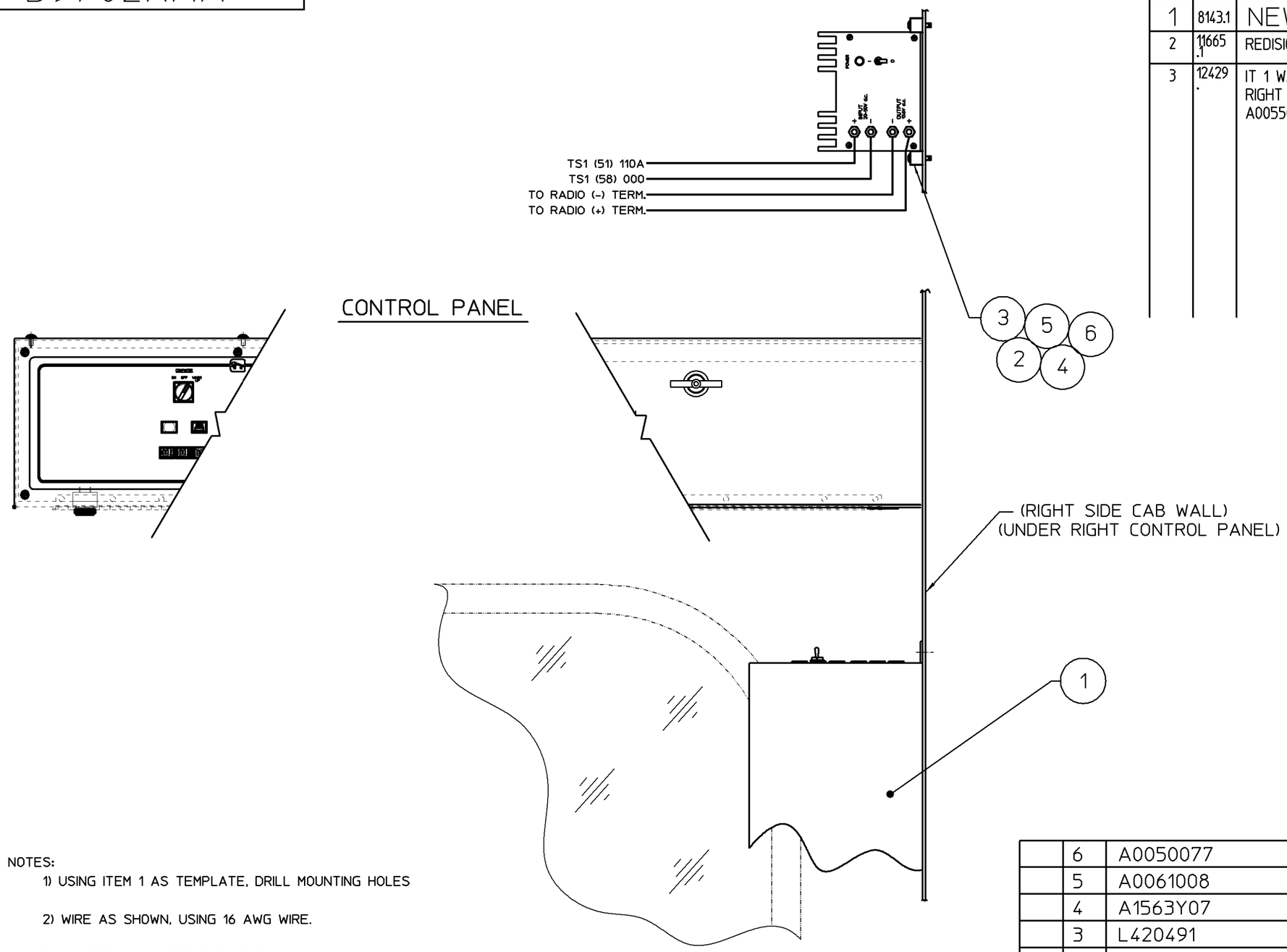

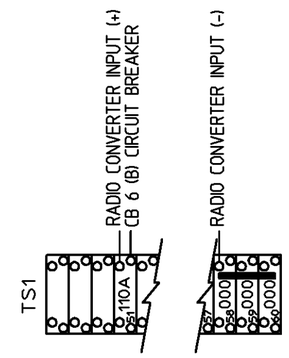

INNER LH PANEL

NOTES:

1) USING ITEM 1 AS TEMPLATE, DRILL MOUNTING HOLES

2) WIRE AS SHOWN, USING 16 AWG WIRE.

3) NUMBER ALL WIRES EACH END.

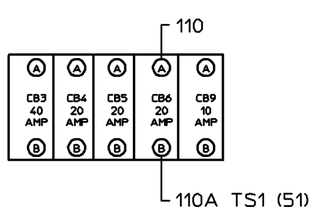

INNER BACK LH PANEL

PLOT -3
TEXT @2

FIG NO.	ITEM NO.	PART NUMBER	DESCRIPTION AND MATERIAL SIZE (REF.ONLY)	QTY
	6	A0050077	1/4 - 20 X 5/8 MSCR	4
	5	A0061008	1/4 MEDIUM LK. WASHER	4
	4	A1563Y07	1/4-20 THREADED INSERT	4
	3	L420491	TIE WRAPS 3-1/2 in.	5
	2	L420494	TIE WRAPS 6 in.	5
	1	B1507Y03	24 TO 12VDC CONV 35 AMP	1

IMPLIED TOLERANCES
ALL DIMENSIONS ARE IN INCHES-TOLERANCE UNLESS OTHERWISE SPECIFIED

NOMINAL SIZE RANGE		PLUS OR MINUS			NOMINAL SIZE RANGE		PLUS OR MINUS		
OVER	TO	FRACTION	2 PLACE DECIMAL	3 PLACE DECIMAL	OVER	TO	FRACTION	2 PLACE DECIMAL	3 PLACE DECIMAL
-	1	1/64	.01	.003	6	24	3/64	.03	.008
1	6	1/32	.02	.005	24	-	1/16	.05	.010

ANGULAR DIMENSIONS PLUS OR MINUS 1 DEGREE

√ ALL MACHINED SURFACES TO HAVE A SURFACE FINISH OF 125 MICROINCHES UNLESS OTHERWISE SPECIFED.

WELDING SPECIFICATION

UNLESS OTHERWISE SPECIFIED ALL WELDS SHOULD ADHERE TO FAIRMONT TAMPER WELDING SPECIFICATION NO. 101

WEIGHT lbs.

3rd ANGLE PROJECTION

DO NOT SCALE

SHEET 1 CONT. ON –

DESCRIPTION (24
RADIO CONVERTER KIT

DRAWN W. GRIER	DATE 05/23/96	MACHINE TYPE MARK IV	
CHECKED JA	DATE 7/24/96		
APP-ENG GJ	DATE 7/24/96		
APP-MFG	DATE		
LAST ECR. 12429 .46	CHECKED hwj	ENG.DWG.NO. D9702XAA	
	DATE 18-Dec-01		

Fairmont Tamper™
2401 Edmund Road-Box 20
Cayce-West Columbia,
South Carolina 29171-0020
(803) 822-9160

THIS DOCUMENT CONTAINS PROPRIETARY INFORMATION AND SUCH INFORMATION MAY NOT BE DISCLOSED TO OTHERS FOR ANY PURPOSE OR USED FOR MANUFACTURING PURPOSES WITHOUT THE WRITTEN PERMISSION OF FAIRMONT TAMPER.

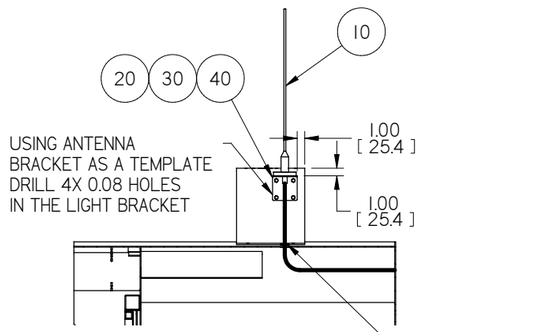

SECTION A-A

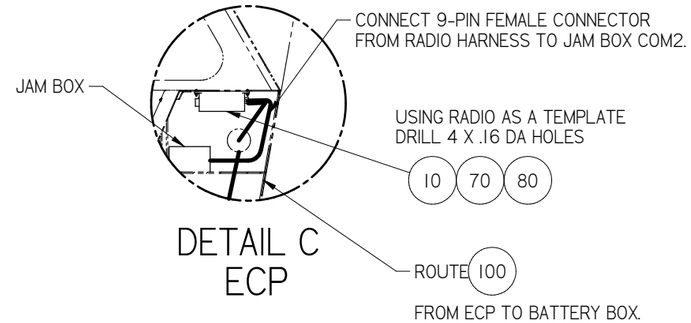

DETAIL C
ECP

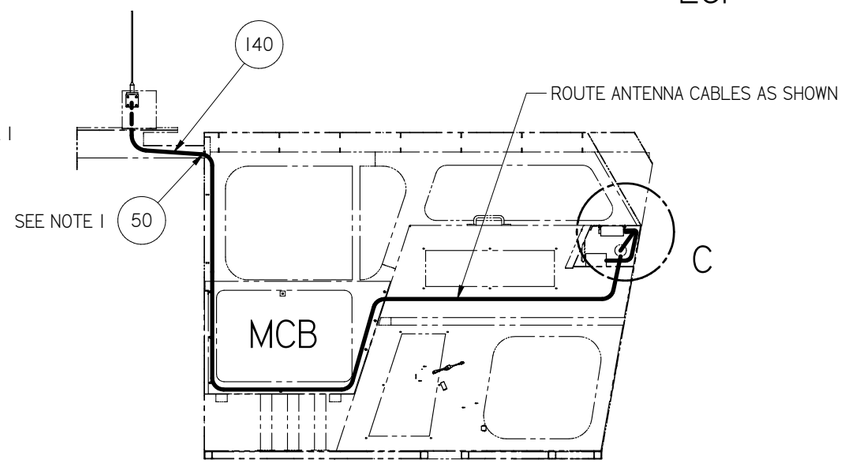

SECTION B-B

NOTE:
1. DRILL 2X 0.87 DIA HOLES APPROX. AS SHOWN IN ROOF AND REAR OF CAB. RUN BOTH ANTENNA CABLES THROUGH CABLE TROUGHS ON LEFT AND REAR OF CAB WITH EXISTING CABLES.

ITEM	PART NO	QTY	DESCRIPTION
10	H6237Y01	1	TRAK PAK SATELLITE RADIO
20	4010258	1	BRACKET, ANTENNA MOUNT
30	153140-420	4	1/4-20 NYLON INS NUT
40	250010-4	4	.25-20 X .88 LG HHC SCREW
50	L41938	2	GROMMET, RUBBER
60	F012914	4	DC-RD HD MS #6-32X3/4 ZP
70	F018886	4	STOP NUT
80	0-3105013-0-03	1	CIRCUIT BREAKER
90	H5285Y02	1	DECAL SATELLITE RADIO
100	F012388	50	TWO COND. CABLE
110	A9297Y03	8	16 GA. WIRE
120	F004320K	2	DC-RING TRM
130	L40818	1	WATER TIGHT CONNECTOR
140	B1623Y01	6	1/4CORG.CONDUIT
150	B0973Y01	6	WIRE MOUNT
160	L420491	6	TIE MINIATURE
170	0-3250001-0-76	1	RING TERMINAL 18-14
180	2007807	1	12 CONTACT GREY CONNECTOR PLUG
190	2004564	1	PLASTIC LOCKING WEDGE
200	350367-E20	5	SOCKET CONTACT
210	350367-G20	1	SEALING PLUG
220	A9297Y01	2	20 GA. WIRE (FT)
230	151655-10	1	HEAT SHRINK TUBE
240	2014920	1	SPLITTER, JUPITER M12 W/PIGTAILS
250	4022330	1	CABLE, M12 M/F NETWORK 7M

BEFORE INSTALLING READ THE
SATILLITE RADIO INSTALLATION GUIDES.

150 160 USE AS NEEDED

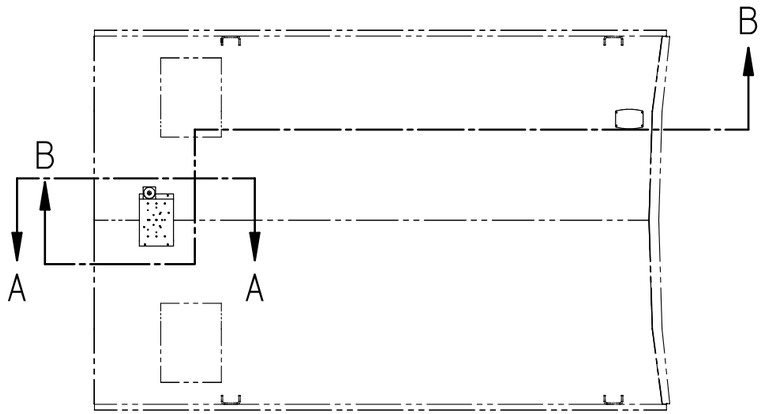

CAB - TOP VIEW

FRONT OF MACHINE

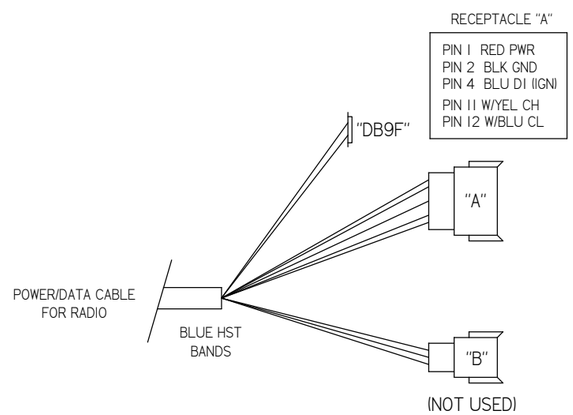

180
190
200 USE ITEM 220 TO MAKE CONNECTIONS FROM POWER WIRES TO CONNECTOR SOCKETS.
210 CONNECT PIN 1 TO PIN 4 AT SPLICE. SOLDER AND HEAT SHRINK SPLICE CONNECTIONS.
220

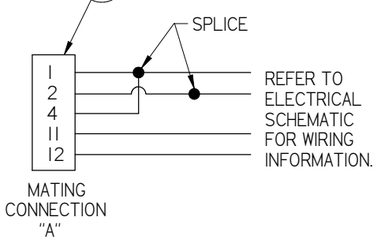

CONNECT TO BATTERY SIDE OF SWITCH

110 120 170

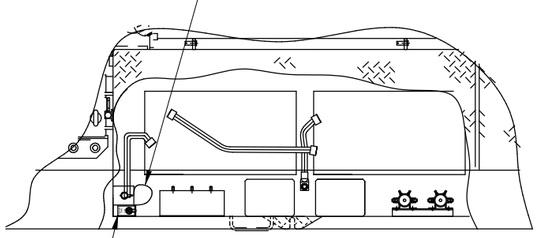

BATTERY BOX

80 90

Inch
[mm]

CONFIDENTIAL
© COPYRIGHT 2011 HARSCO. THIS DRAWING OR DOCUMENT IS THE PROPERTY OF HARSCO AND EMBODIES CONFIDENTIAL INFORMATION, TRADE SECRET INFORMATION, AND/OR KNOW-HOW THAT IS THE PROPERTY OF HARSCO. BY ACCEPTING THIS DRAWING OR DOCUMENT, THE RECIPIENT AGREES (1) NOT TO PROVIDE, OR OTHERWISE MAKE AVAILABLE, THE DRAWING OR DOCUMENT, OR ANY INFORMATION OR KNOW-HOW EMBODIED THEREIN, TO ANY THIRD PARTY AND (2) NOT TO REPRODUCE OR USE THE DRAWING OR DOCUMENT TO MANUFACTURE ANY APPARATUS OR DEVICE, WITHOUT THE PRIOR WRITTEN AUTHORIZATION OF HARSCO.

NOMINAL SIZE RANGE		INCH PLUS OR MINUS	
OVER	TO	2 PLACE DECIMAL	3 PLACE DECIMAL
0	6	.03	.005
6	24	.04	.008
24	-	.06	.010

NOMINAL SIZE RANGE		METRIC PLUS OR MINUS	
OVER	TO	1 PLACE DECIMAL	2 PLACE DECIMAL
0	150	.8	.13
150	600	1.0	.20
600	-	1.5	.25

UNLESS OTHERWISE SPECIFIED ALL MACHINED SURFACES WILL HAVE:
A SURFACE FINISH OF 125 MICRONCHES
ANGULAR TOLERANCE OF ± .50°
CONCENTRICITY WITHIN: .010

THIRD ANGLE PROJECTION

UNLESS OTHERWISE SPECIFIED, ALL WELDS SHOULD ADHERE TO THE MOST CURRENT A.W.S WELDING STANDARDS

CHANGE	R/L	REVISION	DR	DATE
EC501068	A	NEW RELEASE	BJE	5-12-11
EC502615	B	ADDED ITEMS 240 & 250	CJW	1-5-11

Description: SATELLITE RADIO OPTION

HARSCO RAIL

Material: ;

Machine Type: MARK IV CP

Size: D

Weight: 0.0 lbm

Drawn: bedel

Date Drawn: 1/4/2012

Part Number: 5008179

Sheet: 1 of 1

SOLID EDGE DRAWING

DO NOT SCALE

STROBE LIGHT

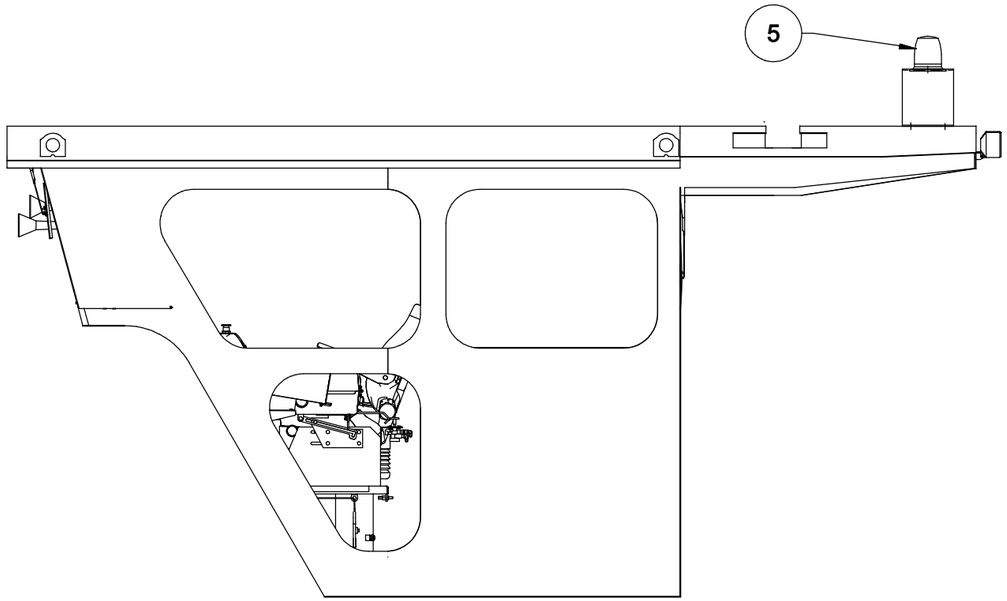

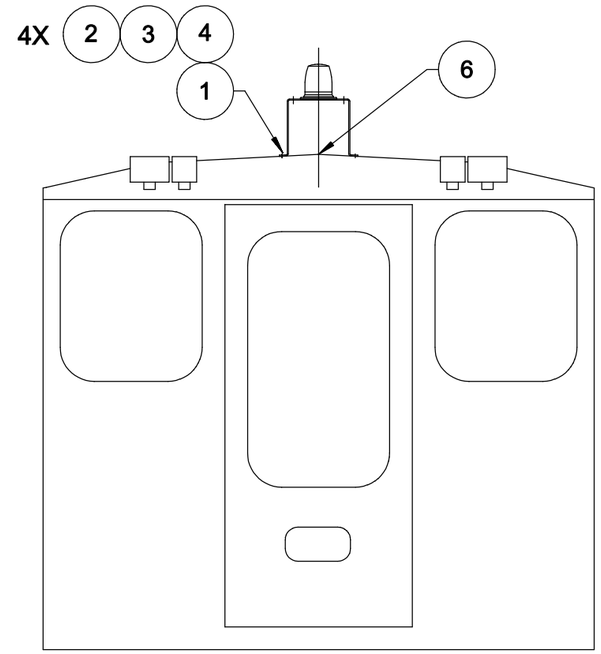

NOTES:

1) PLACE RUBBER GROMMET INCLUDED WITH STROBE LIGHT KIT IN CENTER HOLE OF STROBE BRACKET, ITEM 1. NEXT, DRILL HOLES IN STROBE BRACKET AND ATTACH STROBE LIGHT, IT-5, ON TOP OF STROBE BRACKET USING HARDWARE INCLUDED WITH THE STROBE LIGHT KIT.

2) USE PAINTABLE CAULK, G8120Y01, AS NEEDED TO SEAL ALL HOLES IN ROOF.

3) WIRE PER ELECTRICAL SCHEMATIC.

4) ASSEMBLY TO USE STROBE AS A TEMPLATE AND DRILL HOLES IN THE MOUNTING BRACKET TO MOUNT IF NECESSARY.

ITEM	PART NUMBER	DESCRIPTION	QTY
1	H2782X01	UNIVERSAL BEACON MTG BKT	1
2	A1563Y07	INSERT THREADED	4
3	F009825	DC-HEX HC SCR 1/4-20X1 GR5	4
4	A0061008	1/4 MED LOK WSHR	4
5	0-3104009-0-23	STROBE LIGHT	1
6	Z763595-001	RUBBER GROMMET	1

CONFIDENTIAL

© COPYRIGHT 2001 HARSCO TRACK TECHNOLOGIES. THIS DRAWING OR DOCUMENT IS THE PROPERTY OF HARSCO TRACK TECHNOLOGIES AND EMBODIES CONFIDENTIAL INFORMATION, TRADE SECRET INFORMATION, AND/OR KNOW-HOW THAT IS THE PROPERTY OF HARSCO TRACK TECHNOLOGIES. BY ACCEPTING THIS DRAWING OR DOCUMENT, THE RECIPIENT AGREES (1) NOT TO PROVIDE, OR OTHERWISE MAKE AVAILABLE, THE DRAWING OR DOCUMENT, OR ANY INFORMATION OR KNOW-HOW EMBODIED THEREIN, TO ANY THIRD PARTY AND (2) NOT TO REPRODUCE OR USE THE DRAWING OR DOCUMENT TO MANUFACTURE ANY APPARATUS OR DEVICE, WITHOUT THE PRIOR WRITTEN AUTHORIZATION OF HARSCO TRACK TECHNOLOGIES.

SOLID EDGE DRAWING

IMPLIED TOLERANCES

ALL DIMENSIONS ARE IN INCHES - TOLERANCE UNLESS OTHERWISE SPECIFIED

NOMINAL SIZE RANGE		INCH PLUS OR MINUS		NOMINAL SIZE RANGE		METRIC PLUS OR MINUS	
OVER	TO	2 PLACE DECIMAL	3 PLACE DECIMAL	OVER	TO	1 PLACE DECIMAL	2 PLACE DECIMAL
0	6	.03	.005	0	150	.8	.13
6	24	.04	.008	150	600	1.0	.20
24	-	.06	.010	-	600	1.5	.25

UNLESS OTHERWISE SPECIFIED ALL MACHINED SURFACES WILL HAVE:

A SURFACE FINISH OF 125 MICROINCHES
ANGULAR TOLERANCE OF ± .50°
CONCENTRICITY WITHIN .010

THIRD ANGLE PROJECTION

UNLESS OTHERWISE SPECIFIED ALL WELDS SHOULD ADHERE TO THE LATEST HTT WELDING SPECIFICATION 101

CHANGE	R/L	REVISION	DATE
101272	A	RELEASE	8-24-07

Description: AMBER STROBE LIGHT KIT

Drawing Number: ———

Machine Type: NS MARK VI

Model: 4014695.dft

Drawn: mfleming — Date Drawn: 8-23-07

Weight: ———

Scale: 1:4 — APVD Dwg: JBR — APVD Chkg: JBR

Mat'l: ———

HTT
Harsco Track Technologies
Harsco
Columbia, SC

Part Number: 4014768 — Size: D — Sheet: 1 OF 1

Plotted by colcadadm on 9/9/2010 4014768.dft

NOTES

1. ASSEMBLE ITEMS 17, 18 & 19 ONTO 8 WINDOW SCREENS ASSYS.
2. POSITION WINDOW SCREEN CENTERED OVER WINDOW AND TACK WELD IT-19, STANDOFF, TO CAB WALL.
3. REMOVE SCREEN AND HARDWARE AND COMPLETE WELD OF IT-19 TO CAB WALL.
4. POSITION ITEMS 23, 24 & 25 SO THAT LOWER FRONT SECURITY SCREEN, IT-2, HANGS LEVEL AND DOES NOT EXTEND BELOW BOTTOM OF MAINFRAME TUBE.
5. ITEMS 22, 23, 24, 25 & 26(QTY 4) WELDED TO MAINFRAME.
6. ALL OTHER PARTS ARE FOR CAB WLDT.
7. SCREENS TO BE PAINTED BLACK.
8. RAISE FRONT LOWER WINDOW GUTTER 3 1/2".
9. MOVE REAR DOOR PADLOCK EYES OVER 1/2".

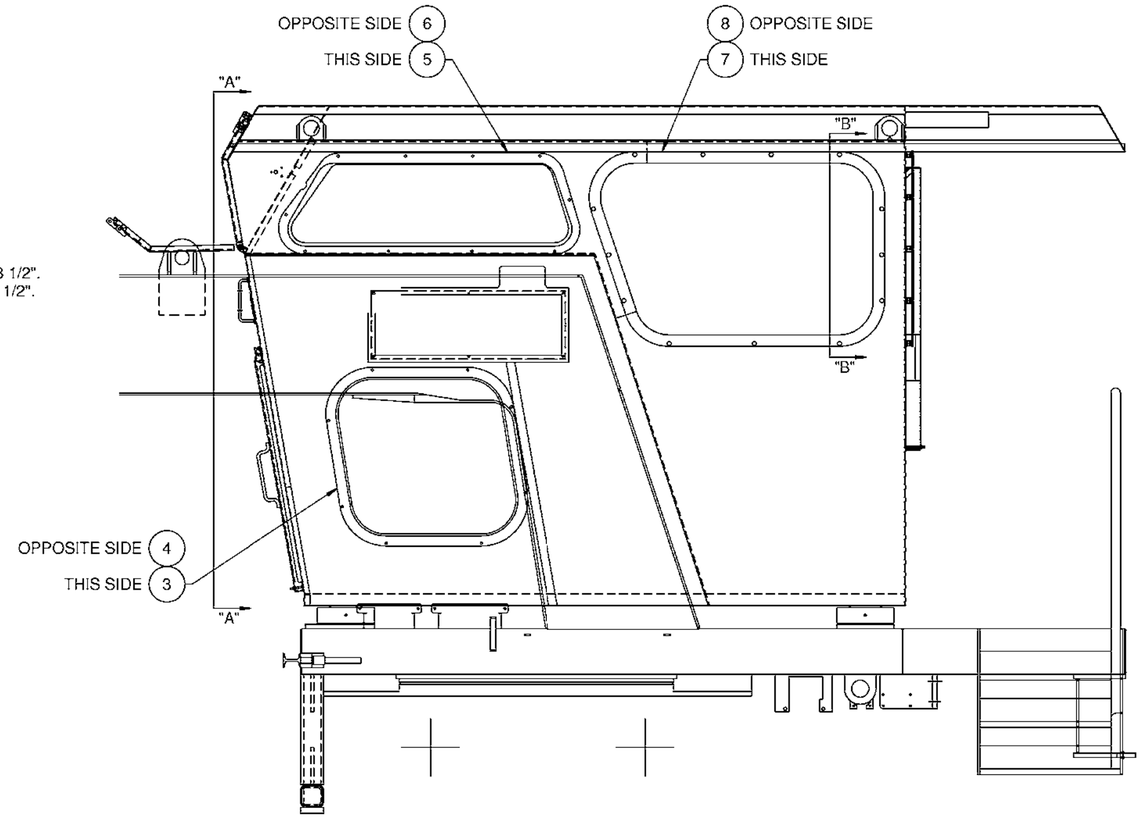

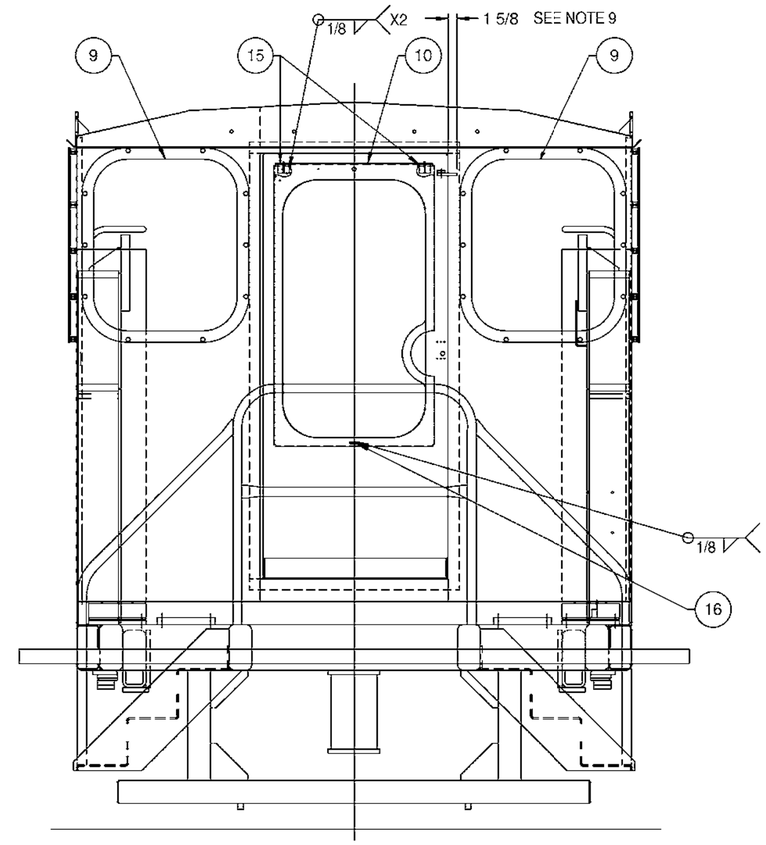

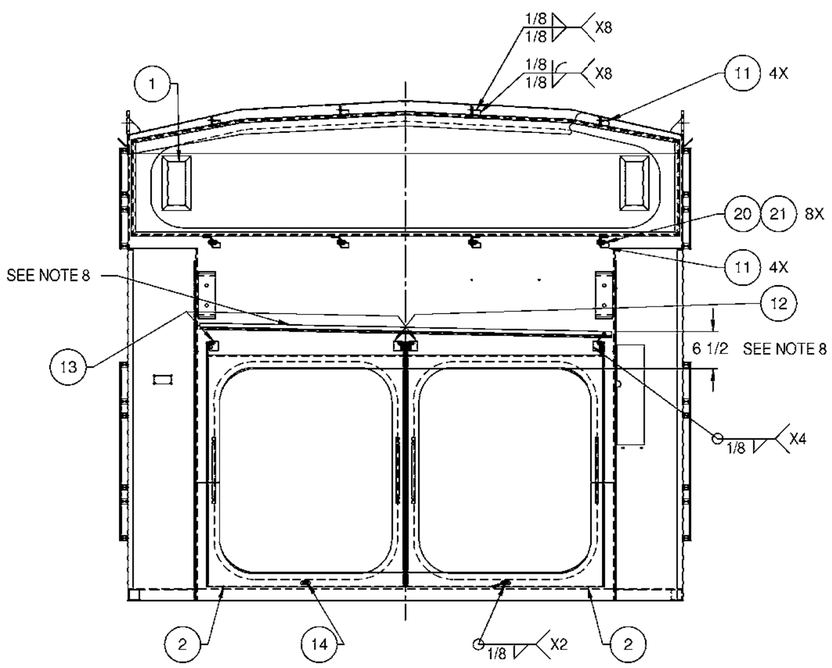

VIEW "A-A"

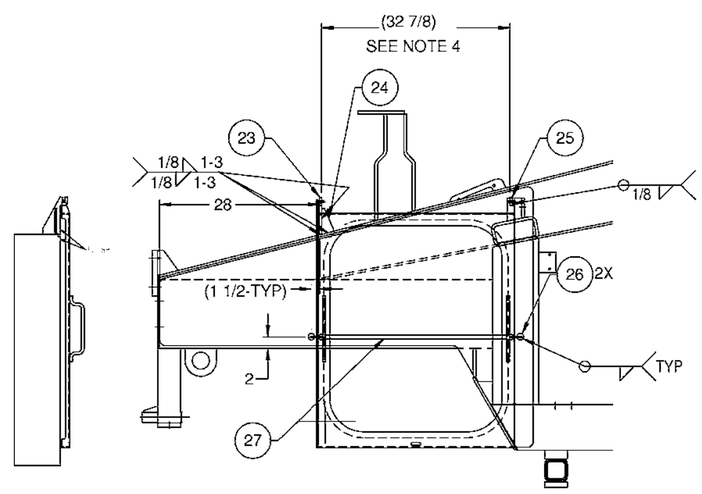

IT-2 STORAGE VIEW

TYP 2 SIDES

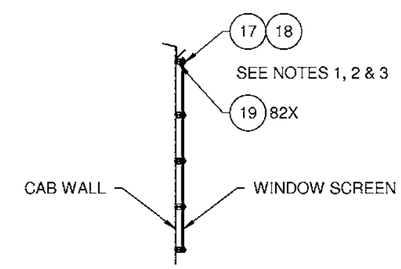

VIEW "B-B"

TYP 8 WINDOWS

SOLID EDGE DRAWING

DOOR SCREEN STORAGE

MARK IV

DOOR SCREEN STORAGE.asm

HTT Harsco Track Technologies

DI530VAD

E

1 of 2

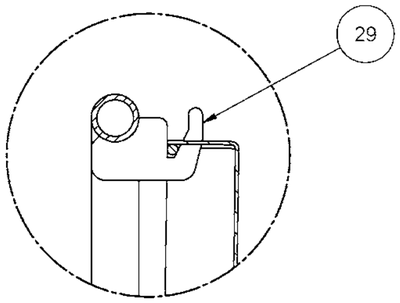

DETAIL B

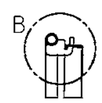

SECTION A-A

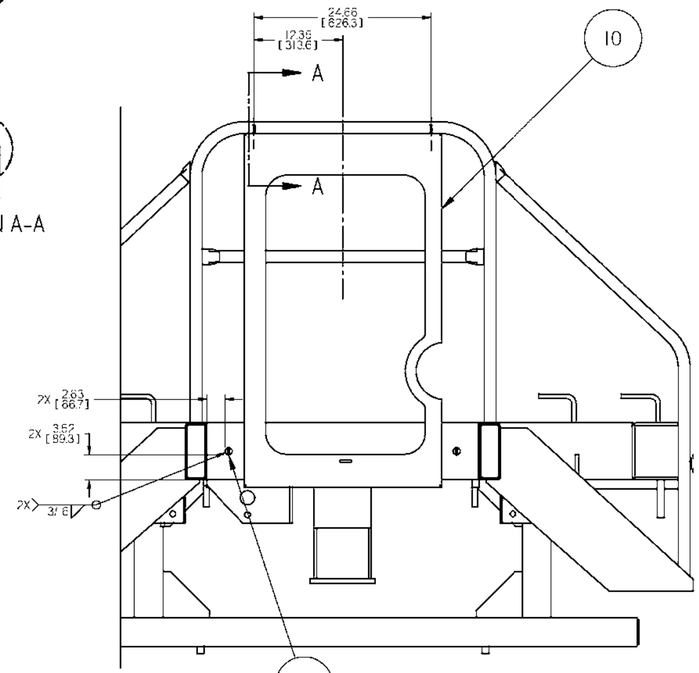

28 NOT SHOWN

ITEM	PART NUMBER	DESCRIPTION	QTY
1	D7515WAB	FRONT SCREEN WLDT	1
2	D1452XAA	LOWER FRONT COVER ASSY	2
3	D7473XAE	LOWER L/H SIDE SCREEN	1
4	D7473XAF	LOWER R/H SIDE SCREEN	1
5	D7473XAA	TOP FR L/H SIDE SCREEN	1
6	D7473XAB	TOP FR R/H SIDE SCREEN	1
7	D1450XAA	UPPER SIDE WINDOW L/H	1
8	D1450XAB	UPPER SIDE WINDOW R/H	1
9	D1443XAA	REAR WINDOW ASSY	2
10	D1462WAA	REAR DOOR SCREEN ASSY	1
11	D7530Y05	TOP LUG	8
12	D1433YAA	HOOK R/H	2
13	D1433YAB	HOOK L/H	2
14	A1189T36	EYE	2
15	D1437YAA	DOOR HOOK	2
16	C6100T42	EYE	1
17	A0073001	3/8-16X3/4 BTNHD CAPSCR	82
18	A0061034	3/8 INT.TOOTH LOCKWASHER	82
19	D1432Y01	STAND OFF	82
20	A0036065	3/8-16 X 1 1/4 CAPSCREW	8
21	0-3011001-0-01	LOCKNUT, 3/8-16 HEX LIGHT THIN	8
23	H6084X01	STORAGE HOOK	2
24	C6702T63	GUSSET 1/4 THICK	2
25	H6084X02	STORAGE HOOK	2
26	0-3010036-0-01	PAD EYE	6
27	B1338Y04	TARP FASTENER	2
28	L424590	RUBBER TARP FASTENER	1
29	4015406	BRACKET, SCREEN HANGER	2

SOLID EDGE DRAWING

DOOR SCREEN STORAGE

MARK IV

D1530VAD

E 2 of 2

HTT Harsco Track Technologies

CONFIDENTIAL

© COPYRIGHT 2001 HARSCO TRACK TECHNOLOGIES. THIS DRAWING OR DOCUMENT IS THE PROPERTY OF HARSCO TRACK TECHNOLOGIES AND EMBODIES CONFIDENTIAL INFORMATION, TRADE SECRET INFORMATION, AND/OR KNOW-HOW THAT IS THE PROPERTY OF HARSCO TRACK TECHNOLOGIES. BY ACCEPTING THIS DRAWING OR DOCUMENT, THE RECIPIENT AGREES (1) NOT TO PROVIDE, OR OTHERWISE MAKE AVAILABLE, THE DRAWING OR DOCUMENT, OR ANY INFORMATION OR KNOW-HOW EMBODIED THEREIN, TO ANY THIRD PARTY AND (2) NOT TO REPRODUCE OR USE THE DRAWING OR DOCUMENT TO MANUFACTURE ANY APPARATUS OR DEVICE, WITHOUT THE PRIOR WRITTEN AUTHORIZATION OF HARSCO TRACK TECHNOLOGIES.

SOLID EDGE DRAWING

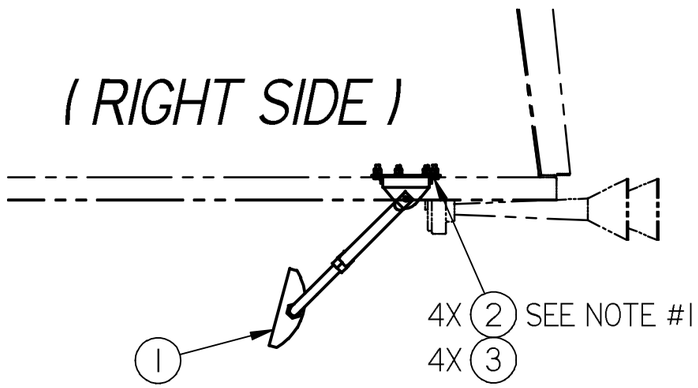

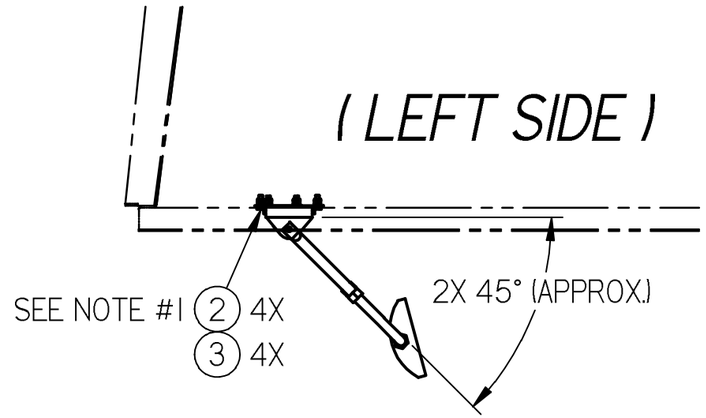

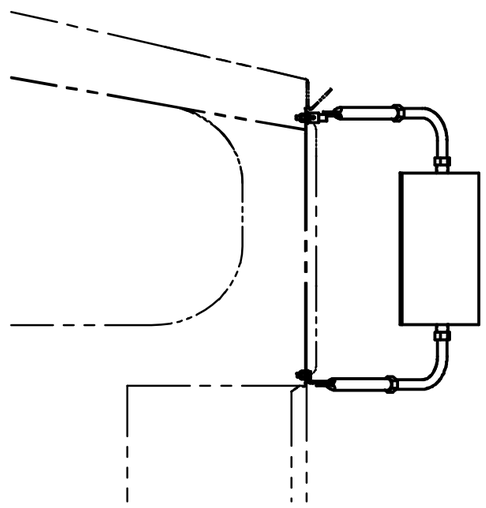

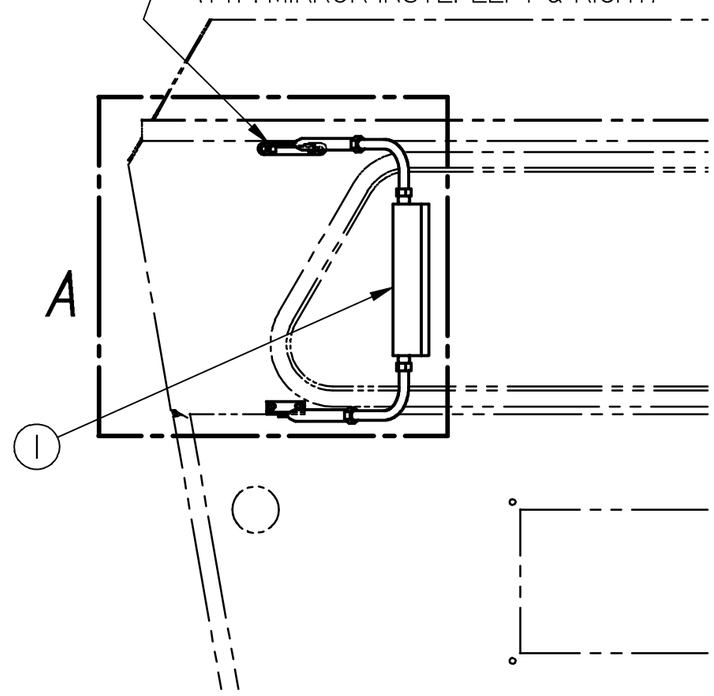

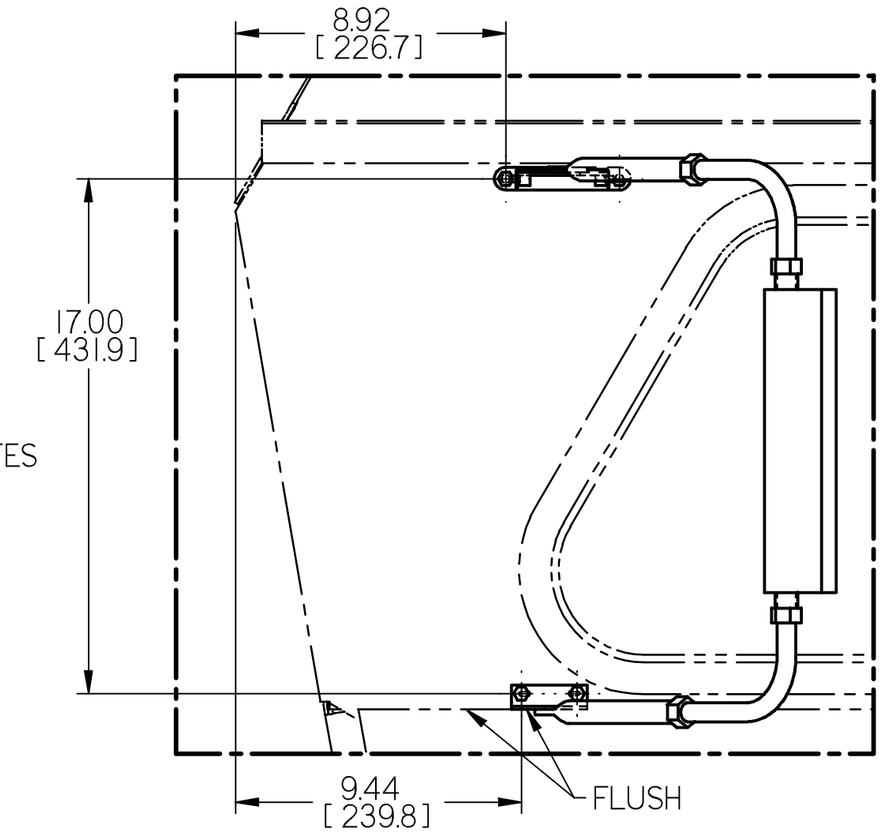

DETAIL A
(BOTH SIDES)

NOTE:

1. USE SEALANT (L410880) TO SEAL AROUND MOUNTING SCREWS.

Item No.	Part Number	Description	Quantity
1	L421306	MIRROR KIT	2
2	A0036003	1/4-20 X 3/4 HHCS	8
3	L41173	LOCKNUT, 1/4-20, LIGHT	8

IMPLIED TOLERANCES

ALL DIMENSIONS ARE IN INCHES - TOLERANCE UNLESS OTHERWISE SPECIFIED

NOMINAL SIZE RANGE OVER	TO	INCH PLUS OR MINUS 2 PLACE DECIMAL	3 PLACE DECIMAL	NOMINAL SIZE RANGE OVER	TO	METRIC PLUS OR MINUS 1 PLACE DECIMAL	2 PLACE DECIMAL
0	6	.03	.005	0	150	.8	.13
6	24	.04	.008	150	600	1.0	.20
24	-	.06	.010	-	600	1.5	.25

UNLESS OTHERWISE SPECIFIED ALL MACHINED SURFACES WILL HAVE;
A SURFACE FINISH OF 125 MICROINCHES
ANGULAR TOLERANCE OF ±.50°
CONCENTRICITY WITHIN .010

THIRD ANGLE PROJECTION

UNLESS OTHERWISE SPECIFIED ALL WELDS SHOULD ADHERE TO THE LATEST HTT WELDING SPECIFICATION 101

CHANGE	R/L	REVISION	DATE
100872	E	RELOCATED WINDOWS	11-20-06

Description: WEST COAST MIRROR KIT

Drawing Number: ----------

Machine Type: WEST COAST MIRROR KIT

Model: C9433YAA.asm

Drawn: C.J.Wolf

Date Drawn: 11-20-06

Weight: 0.000 lbm

Scale: 1:10

APVD Desg: JBR

APVD ChEng: JBR

Mat'l: - -

HTT
Harsco Track Technologies
Harsco
Columbia, SC

Part Number: C9433YAA

Size: B

Sheet: 1 of 1

Plotted by smadmin on 9/9/2010 C9433YAA.dft

ENGINE COMPONENTS

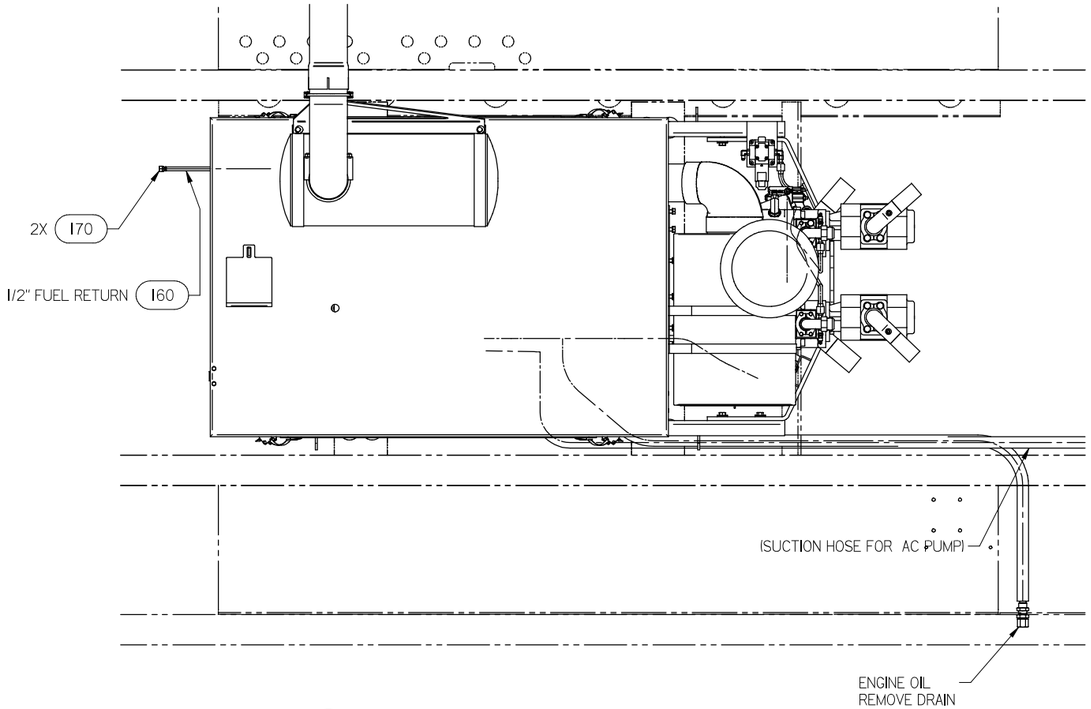

ITEM	PART NO	QTY	DESCRIPTION
10	5004772	1	ENGINE SKID ASSEMBLY
30	Z768731-001	8	UPPER SHOCK MOUNT
40	Z768730-001	8	LOWER SHOCK MOUNT
50	A0059007	8	5/8 MED PL WSHR
60	F017188	8	HEX ELASTIC STOP NUT 5/8-11
70	0-3019002-0-06	8	5/8 HARDENED FL WASHER
80	F002480	8	HEX HD CAP SCR 5/8-11X4 GR5 ZP
100	F017138	1	M8-CAP 12F *
140	0-3612011-0-36	1	STACK PIPE 5 DIA X 36
150	F040408	1	DC-STR 12X12 BH
160	L423117	10	3/8 LP HOSE
170	L422765	2	JIC SWIVEL

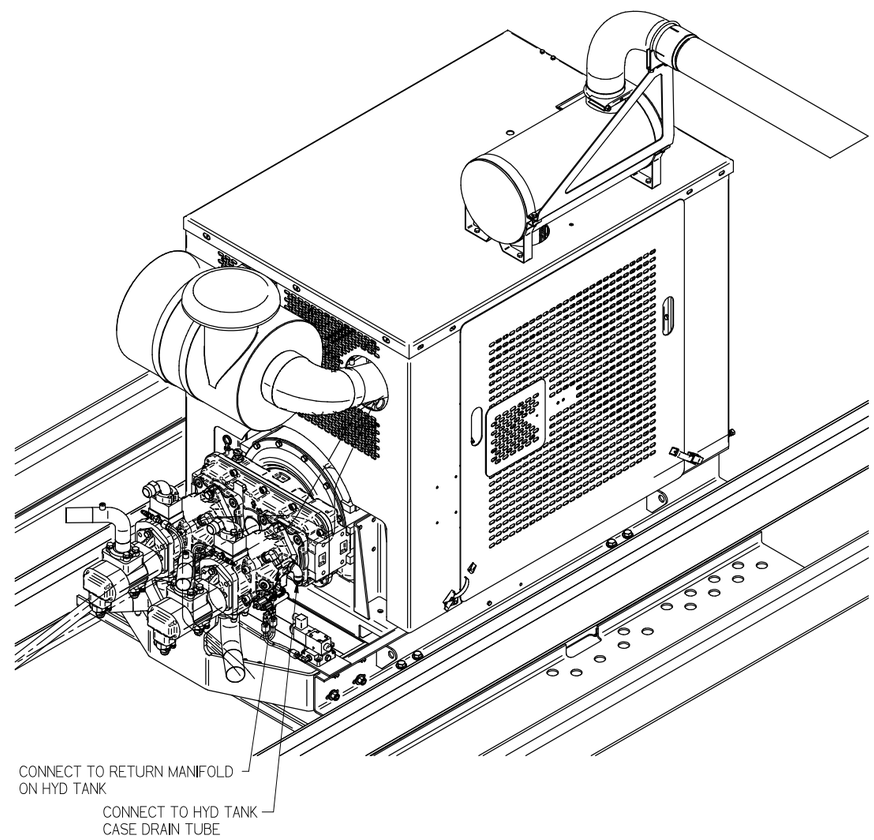

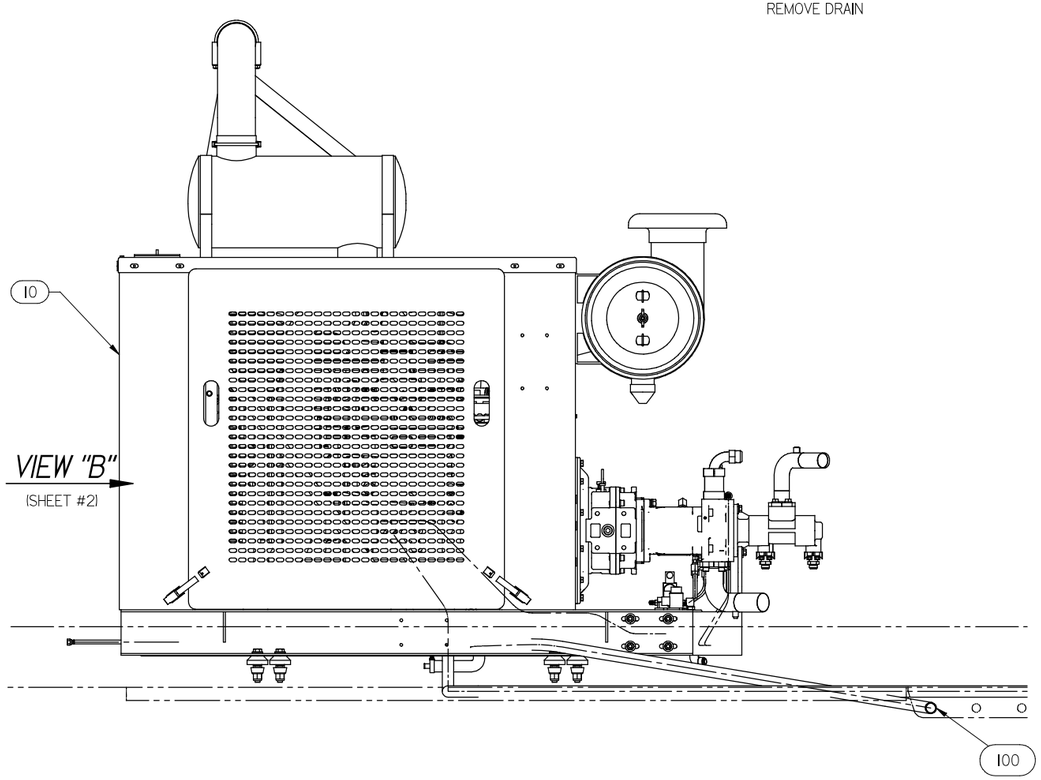

MARK IV
CUMMINS TIER III QSC ELECTRONIC POWER UNIT
HYDRAULIC PUMP FOR MACBONE/ VISIONAIRE AIR
CONDITIONER II TOOTH DRIVE ON AIR COMPRESSOR
REXROTH AND HALDEX PUMPS

Inch
[mm]

CONFIDENTIAL
© COPYRIGHT 2011 HARSCO. THIS DRAWING OR DOCUMENT IS THE PROPERTY OF HARSCO AND EMBODIES CONFIDENTIAL INFORMATION, TRADE SECRET INFORMATION, AND/OR KNOW-HOW THAT IS THE PROPERTY OF HARSCO. BY ACCEPTING THIS DRAWING OR DOCUMENT, THE RECIPIENT AGREES (1) NOT TO PROVIDE, OR OTHERWISE MAKE AVAILABLE, THE DRAWING OR DOCUMENT, OR ANY INFORMATION OR KNOW-HOW EMBODIED THEREIN, TO ANY THIRD PARTY AND (2) NOT TO REPRODUCE OR USE THE DRAWING OR DOCUMENT TO MANUFACTURE ANY APPARATUS OR DEVICE, WITHOUT THE PRIOR WRITTEN AUTHORIZATION OF HARSCO.

NOMINAL SIZE RANGE OVER	TO	INCH PLUS OR MINUS 2 PLACE DECIMAL	3 PLACE DECIMAL
0	6	.03	.005
6	24	.04	.008
24	-	.06	.010

NOMINAL SIZE RANGE OVER	TO	METRIC PLUS OR MINUS 1 PLACE DECIMAL	2 PLACE DECIMAL
0	150	.8	.13
150	600	1.0	.20
600	-	1.5	.25

UNLESS OTHERWISE SPECIFIED ALL MACHINED SURFACES WILL HAVE;
A SURFACE FINISH OF 125 MICRONCHES
ANGULAR TOLERANCE OF ±.5/
CONCENTRICITY WITHIN .010
THIRD ANGLE PROJECTION
UNLESS OTHERWISE SPECIFIED, ALL WELDS SHOULD ADHERE TO THE MOST CURRENT A.W.S WELDING STANDARDS

CHANGE	R/L	REVISION	DR	DATE
EC501643	A	NEW RELEASE	JRD	07-29-11

Description: ENGINE INSTL.
HARSCO RAIL
Material
Machine Type: MARK IV
Size: D
Weight
Drawn: badler
Date Drawn: 8/17/2011
Part Number: 5010117
Sheet: 1 of 2
SOLID EDGE DRAWING
DO NOT SCALE

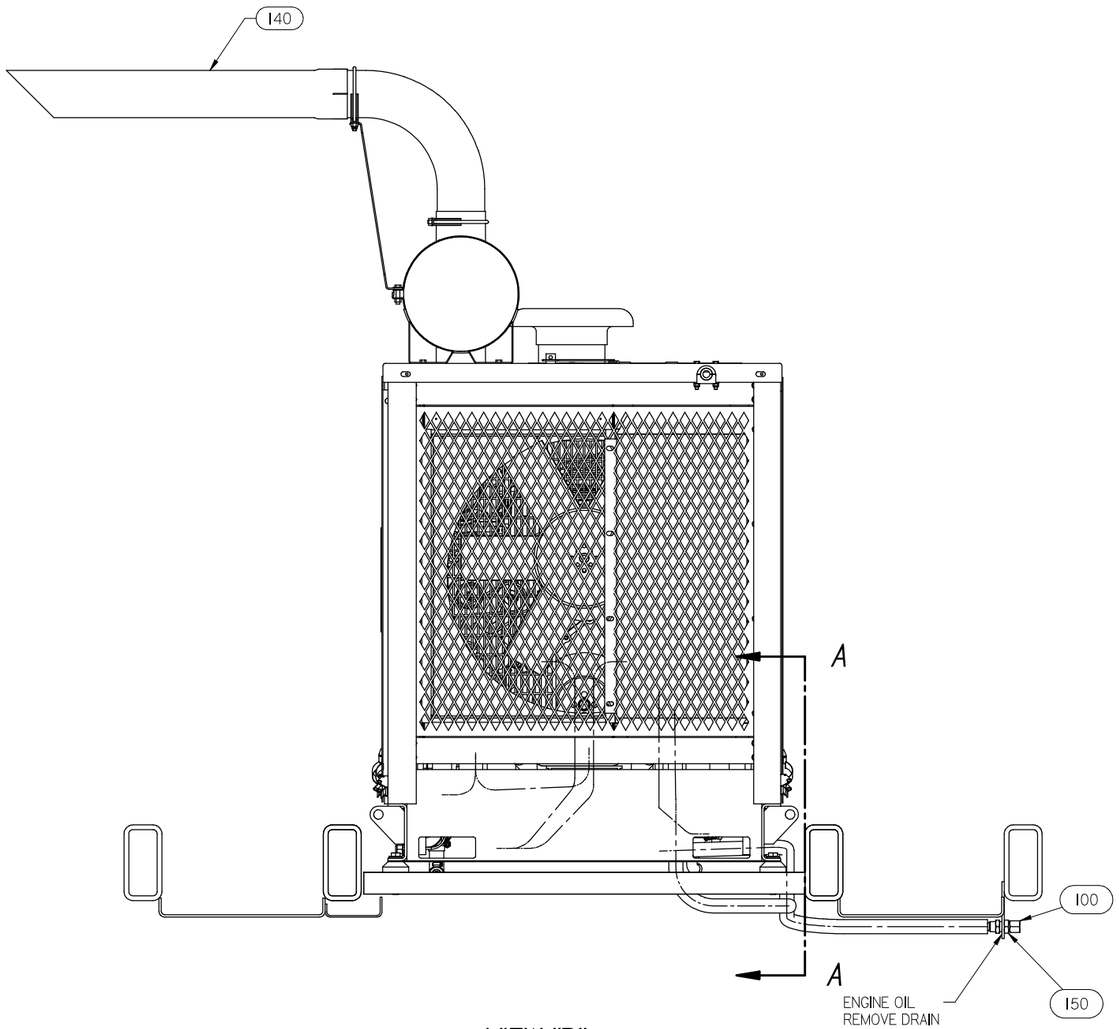

VIEW "B"

(SHEET #1)

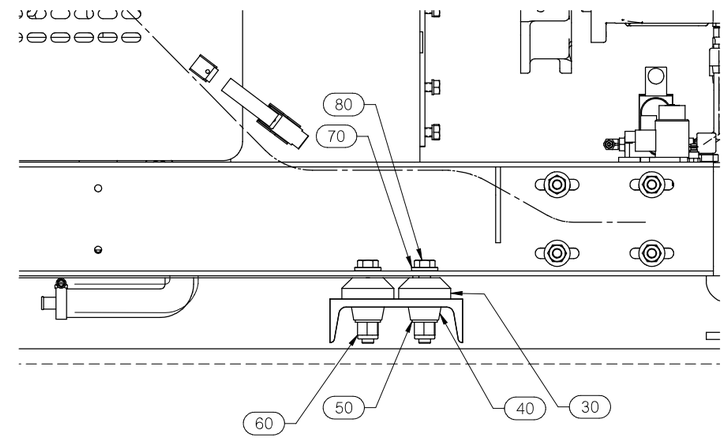

SECTION A-A

Inch
[mm]

CONFIDENTIAL

© COPYRIGHT 2011 HARSCO. THIS DRAWING OR DOCUMENT IS THE PROPERTY OF HARSCO AND EMBODIES CONFIDENTIAL INFORMATION, TRADE SECRET INFORMATION, AND/OR KNOW-HOW THAT IS THE PROPERTY OF HARSCO. BY ACCEPTING THIS DRAWING OR DOCUMENT, THE RECIPIENT AGREES (1) NOT TO PROVIDE, OR OTHERWISE MAKE AVAILABLE, THE DRAWING OR DOCUMENT, OR ANY INFORMATION OR KNOW-HOW EMBODIED THEREIN, TO ANY THIRD PARTY AND (2) NOT TO REPRODUCE OR USE THE DRAWING OR DOCUMENT TO MANUFACTURE ANY APPARATUS OR DEVICE, WITHOUT THE PRIOR WRITTEN AUTHORIZATION OF HARSCO.

NOMINAL SIZE RANGE		INCH PLUS OR MINUS	
OVER	TO	2 PLACE DECIMAL	3 PLACE DECIMAL
0	6	.03	.005
6	24	.04	.008
24	-	.06	.010

NOMINAL SIZE RANGE		METRIC PLUS OR MINUS	
OVER	TO	1 PLACE DECIMAL	2 PLACE DECIMAL
0	150	.8	.13
150	600	1.0	.20
600	-	1.5	.25

UNLESS OTHERWISE SPECIFIED ALL MACHINED SURFACES WILL HAVE;
A SURFACE FINISH OF 125 MICROINCHES
ANGULAR TOLERANCE OF ±.02°
CONCENTRICITY WITHIN .010

THIRD ANGLE PROJECTION

UNLESS OTHERWISE SPECIFIED, ALL WELDS SHOULD ADHERE TO THE MOST CURRENT AWS WELDING STANDARDS

DOCUMENT CHANGE	R/D	DOCUMENT CHANGE	REVISION	DR	DATE
EC501643	A	NEW RELEASE		JRD	07-29-11

Description: ENGINE INSTL.

HARSCO RAIL

Material

Machine Type: MARK IV

Weight

Drawn: badler

Date Drawn: 8/17/2011

Part Number: 5010117

Size: D

Sheet 2 of 2

SOLID EDGE DRAWING

DO NOT SCALE

ITEM	PART NO	QTY	DESCRIPTION
1570	F001539	2	DC-HEX HD CAP SCR 1/2-13X1 1/4
1580	F001025	8	LOCK WASHER, 3/8 SAE MED PL

ITEM	PART NO	QTY	DESCRIPTION
760	F012888	2	5/16-18 X 2 3/4 HHCS U/F012888
770	0-3305022-0-06	1	SPLIT BUSHING
780	C6917Y08	1	ADAPTER METRIC JIC
810	L40672	1	PLUG SQ. HEAD
820	F013468	1	DC-ELB90 8NPTX8FPT
850	A4404T03	2	HOSE. 3/4" HEATER (FT)
860	B9932Y10	1	GEAR PUMP,SINGLE
880	F024596	2	GAGE PORT ADAPTER
890	F014738	2	O-RING
900	3400678	2	CHECK VALVE
910	0-3304145-0-03	2	90 DEG SAE 37/SPLIT FLAN
930	F015567	1	DC-ELB45 16X16SAE
940	0-3361006-0-03	1	SUB PLATE
950	4029520	1	VALVE, PROP. PRESS. RELIEF
960	0-1302631-0-01	1	SUB PLATE MTG BRACKET
970	4008374	2	TRANSDUCER, HYDRAULIC PRESS
980	0-3305022-0-07	2	SPLIT BUSHING
990	0-3305021-0-02	2	HYDRAULIC LINE CLAMP 2" SERIES 2 HOLE
1000	F024720	2	STACKING NUT
1010	0-3305022-0-20	2	WELD ADAPTER
1020	F009546	2	5/16 LOCK WASHER
1030	F001489	2	DC-HEX HD CAP SCR 5/16-18X3/4
1040	F002965	8	DC-SAE WASHER 1/2 ZP
1050	F001103	4	DC-SAE RGLR LOCK WASHER 5/8 ZP
1060	700566225	4	HEX HD CS 5/8-11X2 1/4 GR8 ZP
1070	F001075	8	DC-SAE RGLR LOCK WASHER 1/2 ZP
1080	F005606	8	HEX HD CS 3/8-16 X 4 1/4 GR 5
1090	F017897	2	TEE 4X4X4SAE
1100	F024731	3	DC-STR 4FSX4NPT
1110	F011937	2	DC-ELB90 4X4NPT
1130	F017898	1	DC-TEE 4X4SAEX4
1140	F015085	1	DC-ELB90 4X4FS
1150	F015292	2	DC-PLG 6SAE HH
1220	C1140Y04	1	SOLENOID RELIEF VALVES
1230	4017975	1	MOUNT, RELIEF VALVE
1240	F013515	1	DC-STR 8X10SAE
1250	F016887	3	ELBOW 90 DEGREE **
1260	F040294	2	DC-ELB90 8X12SAE
1280	F014734	1	-4 ORB/JIC
1290	0-3304115-0-05	2	SAE "O" RING-37/FLARE 45
1310	187901	2	RESTRICTOR
1320	0-3610004-0-20	2	MOLDED RAD. HOSE
1330	F009825	2	DC-HEX HC SCR 1/4-20X1 GR5
1340	D4709X01	2	FLANGE RING REWORK
1440	F020664	6	SPLIT FLANGE KIT
1520	175541	1	HOSE ASSEMBLY
1530	174891	2	HOSE ASSEMBLY
1540	174882	1	HOSE ASSEMBLY
1550	195398	1	HOSE ASSEMBLY
1560	L423927	2	O-RING

ITEM	PART NO	QTY	DESCRIPTION
10	4012415	1	CUMMINS POWER UNIT
20	5004130	1	PUMP DRIVE, 2 PAD
30	A2391YAC	2	90 HOSE STEM 2 1/2X2 SF
50	D1735Y01	2	SHUTOFF VALVE
60	0-3012000-0-02	2	HOSE CLAMP (5/8 HOSE)
70	B9432Y01	1	BOOSTER PUMP
80	0-3012000-0-17	4	HOSE CLAMP (1" HOSE)
90	A2391YAE	2	90 HOSE STEM 2 X 2 SF
100	4009522	1	PUMP SUPPORT BRACKET
110	5005833	2	PUMP, VAR. VOL PISTON
130	L423613	1	GOVERNOR
140	F013193	2	ADAPTER 1/8 MP-1/4 JIC
160	3400863	2	HEX SKT HD CS M08 X 1.25 X 75
170	149615	2	LOCKWASHER 8MM
190	0-3120002-0-01	1	STARTER RELAY (JRE)
210	F013588	4	DC-1/4-20 ELAS STP NUT
220	A9977Y05	2	HOSE CONN 1" TO 5/8"
230	F001099	2	HHCS 5/16-18X1" GR5 PLATED
240	F001362	2	WROUGHT WASHER - .312
250	L40388	2	LOCKNUT, 5/16-18, HEAVY, THIN
260	F010679	1	DC-STR 12NPTX8FPT
320	L41228	3	PLUG, QUICK COUPLING
330	A0713Y11	2	DOUBLE GEAR PUMP (EX AVAIL)
340	A0069041	4	M12 DIN 125A PL WASHER
350	150791	16	LOCK WASHER 12MM
360	TY766547-009	14	M12 X 1.75 X 40MM HHCS GR 8.8
370	143862	2	SPLIT FLANGE KIT
410	F010989	2	PLG 4NPT SKT
440	F014736	1	DC-STR 4X4SAE
450	0-3304143-0-05	4	SPLIT FLANGE
490	F001106	2	DC-WROUGHT WASHER 1/4 ZP. *
500	F022262	2	ELB90 -6 X -4 SAE
540	F015687	1	DC-TEE 4X2NPTX4
560	0-3612003-0-75	1	EXHAUST ELBOW 90 DEG
570	4010242	1	BRACKET, EXHAUST PIPE
580	0-1406503-0-01	2	MUFFLER CLAMP
590	A0036063	1	3/8-16 X 1 HEX HEAD CAPSCREW
600	A0059003	3	3/8 REG PL WSHR
610	F015922	1	DC-3/8-16 ELASTIC STOP NUT
620	F001267	32	DC-WROUGHT WASHER 1/2 ZP
630	F014487	8	DC-1/2-13 ELASTIC STOP NUT
640	F001442	8	DC-HEX HD CAP SCR 1/2-13X2 GR5
660	172164	1	POWER CONTACTOR
670	F003067	2	DC-HEX HD CAP SCR 1/4-20X5/8 G
680	F013210	1	DC-STR 12X8NPT
690	F011455	8	DC-3/8 LW *
700	F013211	8	3/8-16 X 3/4 SKT HS CS
710	408623	2	HEX HD CS M12X1.75X30 CL10.9 Z
740	0-3305021-0-01	2	HYD LINE CLAMP 2" SERIES
750	F014476	2	5/16 ELASTIC STOP NUT

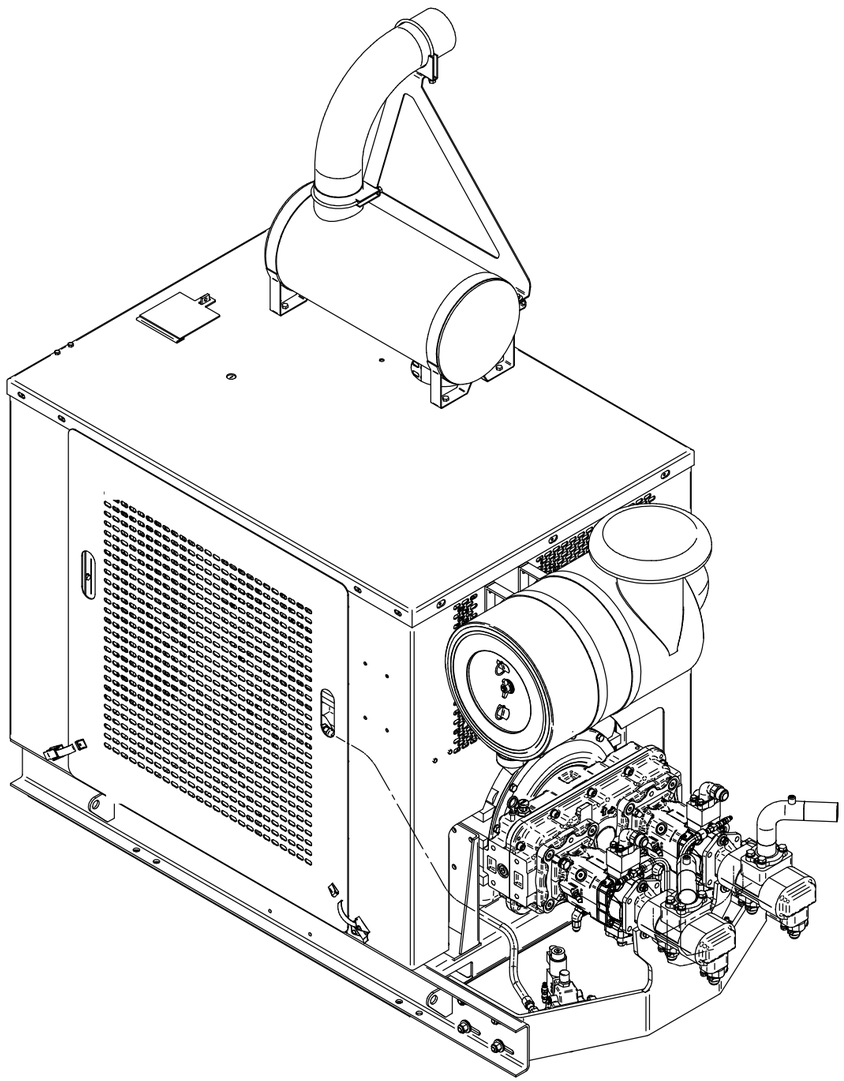

FILL PUMP DRIVE TO THE PROPER OIL LEVEL, ACCORDING TO DIPSTICK, WITH SAE 80W90 MULTI GEAR LUBE (APPROX. 8 PINTS) - (2470-132 IS STAMPED ON THE END OF DIPSTICK)

NOTE:

1-1 PUMP DRIVE, PUMPS, BRACKETS, AND UNPLATED HARDWARE TO BE PAINTED TO MATCH ENGINE ENCLOSURE.

RADIATOR FILLER COVER TO BE PAINTED GRAY

MARK IV
CUMMINS TIER III QSC ELECTRONIC CONTROL POWER UNIT
HYDRAULIC PUMP FOR MACBONE/VISIONAIRE AIR CONDITIONER

Inch
[mm]

CONFIDENTIAL
© COPYRIGHT 2011 HARSCO. THIS DRAWING OR DOCUMENT IS THE PROPERTY OF HARSCO AND EMBODIES CONFIDENTIAL INFORMATION, TRADE SECRET INFORMATION, AND/OR KNOW-HOW THAT IS THE PROPERTY OF HARSCO. BY ACCEPTING THIS DRAWING OR DOCUMENT, THE RECIPIENT AGREES (1) NOT TO PROVIDE, OR OTHERWISE MAKE AVAILABLE, THE DRAWING OR DOCUMENT, OR ANY INFORMATION OR KNOW-HOW EMBODIED THEREIN, TO ANY THIRD PARTY AND (2) NOT TO REPRODUCE OR USE THE DRAWING OR DOCUMENT TO MANUFACTURE ANY APPARATUS OR DEVICE, WITHOUT THE PRIOR WRITTEN AUTHORIZATION OF HARSCO.

NOMINAL SIZE RANGE		INCH PLUS OR MINUS	
OVER	TO	2 PLACE DECIMAL	3 PLACE DECIMAL
0	6	.03	.005
6	24	.04	.008
24	-	.06	.010

NOMINAL SIZE RANGE		METRIC PLUS OR MINUS	
OVER	TO	1 PLACE DECIMAL	2 PLACE DECIMAL
0	150	.8	.13
150	600	1.0	.20
600	-	1.5	.25

UNLESS OTHERWISE SPECIFIED ALL MACHINED SURFACES WILL HAVE;
A SURFACE FINISH OF 125 MICROINCHES
ANGULAR TOLERANCE OF ± .50°
CONCENTRICITY WITHIN .010

THIRD ANGLE PROJECTION

UNLESS OTHERWISE SPECIFIED, ALL WELDS SHOULD ADHERE TO THE MOST CURRENT A.W.S WELDING STANDARDS

CHANGE	R/L	REVISION	DR	DATE
EC500410	A	RELEASE.	BPA	01-25-11
EC501608	B	SEE EC	JRD	07-26-11
EC502288	C	IT #110 WAS PART #5001854, NOW PART #5005833.	RSC	11-08-11

Description: ENGINE SKID ASSEMBLY

HARSCO RAIL

Material: –
Machine Type: MARK IV
Size: D
Weight: 6656.773 lbm
Drawn: badler
Date Drawn: 04-16-09
Part Number: 5004772
Sheet: 1 of 4

SOLID EDGE DRAWING
DO NOT SCALE

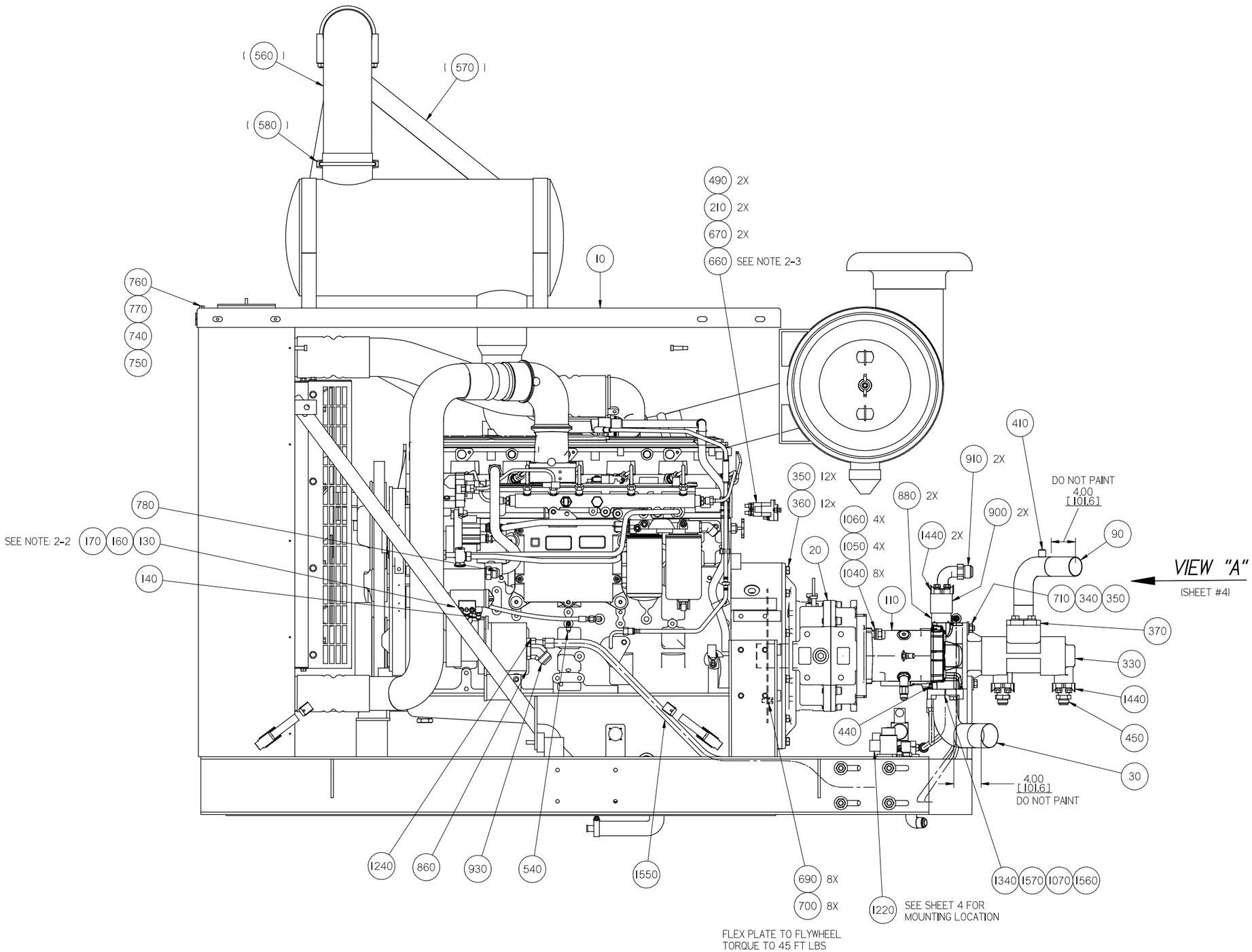

NOTES

2-1 CAP ALL OPEN HOSES AND FITTINGS.

2-2 USE EXISTING GASKET TO MOUNT GOVERNOR DIRECTLY TO COMPRESSOR

2-3 USE ITEM 10, POWER CONTACTOR, AS A TEMPLATE TO DRILL (2) 9/32 DIA. HOLES IN REAR PANEL. LOCATE APPROXIMATELY AS SHOWN.

2-4 APPLY ANTI-SEIZE TO PUMP DRIVE SPLINES BEFORE MOUNTING TO ENGINE, AND TO PUMP SPLINES BEFORE MOUNTING TO PUMP DRIVE

FILL PUMP DRIVE TO THE PROPER OIL LEVEL. ACCORDING TO DIPSTICK, WITH SAE 80W90 MULTI GEAR LUBE (APPROX. 8 PINTS) - (2470-132 IS STAMPED ON THE END OF DIPSTICK)

Inch
[mm]

CONFIDENTIAL
© COPYRIGHT 2011 HARSCO. THIS DRAWING OR DOCUMENT IS THE PROPERTY OF HARSCO AND EMBODIES CONFIDENTIAL INFORMATION, TRADE SECRET INFORMATION, AND/OR KNOW-HOW THAT IS THE PROPERTY OF HARSCO. BY ACCEPTING THIS DRAWING OR DOCUMENT, THE RECIPIENT AGREES (1) NOT TO PROVIDE, OR OTHERWISE MAKE AVAILABLE, THE DRAWING OR DOCUMENT, OR ANY INFORMATION OR KNOW-HOW EMBODIED THEREIN, TO ANY THIRD PARTY AND (2) NOT TO REPRODUCE OR USE THE DRAWING OR DOCUMENT TO MANUFACTURE ANY APPARATUS OR DEVICE, WITHOUT THE PRIOR WRITTEN AUTHORIZATION OF HARSCO.

NOMINAL SIZE RANGE		INCH PLUS OR MINUS	
OVER	TO	2 PLACE DECIMAL	3 PLACE DECIMAL
0	6	.03	.005
6	24	.04	.008
24	-	.06	.010

NOMINAL SIZE RANGE		METRIC PLUS OR MINUS	
OVER	TO	1 PLACE DECIMAL	2 PLACE DECIMAL
0	150	.8	.13
150	600	1.0	.20
600	-	1.5	.25

UNLESS OTHERWISE SPECIFIED ALL MACHINED SURFACES WILL HAVE:
A SURFACE FINISH OF 125 MICROINCHES
ANGULAR TOLERANCE OF ±.5°
CONCENTRICITY WITHIN .010

THIRD ANGLE PROJECTION

UNLESS OTHERWISE SPECIFIED, ALL WELDS SHOULD ADHERE TO THE MOST CURRENT A.W.S WELDING STANDARDS

CHANGE	R/L	REVISION	DR	DATE
EC500410	A	RELEASE.	BPA	01-25-11
EC501608	B	SEE EC	JRD	07-26-11
EC502288	C	IT #110 WAS PART #5001854, NOW PART #5005833.	RSC	11-08-11

Description: ENGINE SKID ASSEMBLY

HARSCO RAIL

Material: –
Machine Type: MARK IV
Size: D
Weight: 6656.773 lbm
Drawn: badler
Date Drawn: 04-16-09
Part Number: 5004772
Sheet: 2 of 4

SOLID EDGE DRAWING
DO NOT SCALE

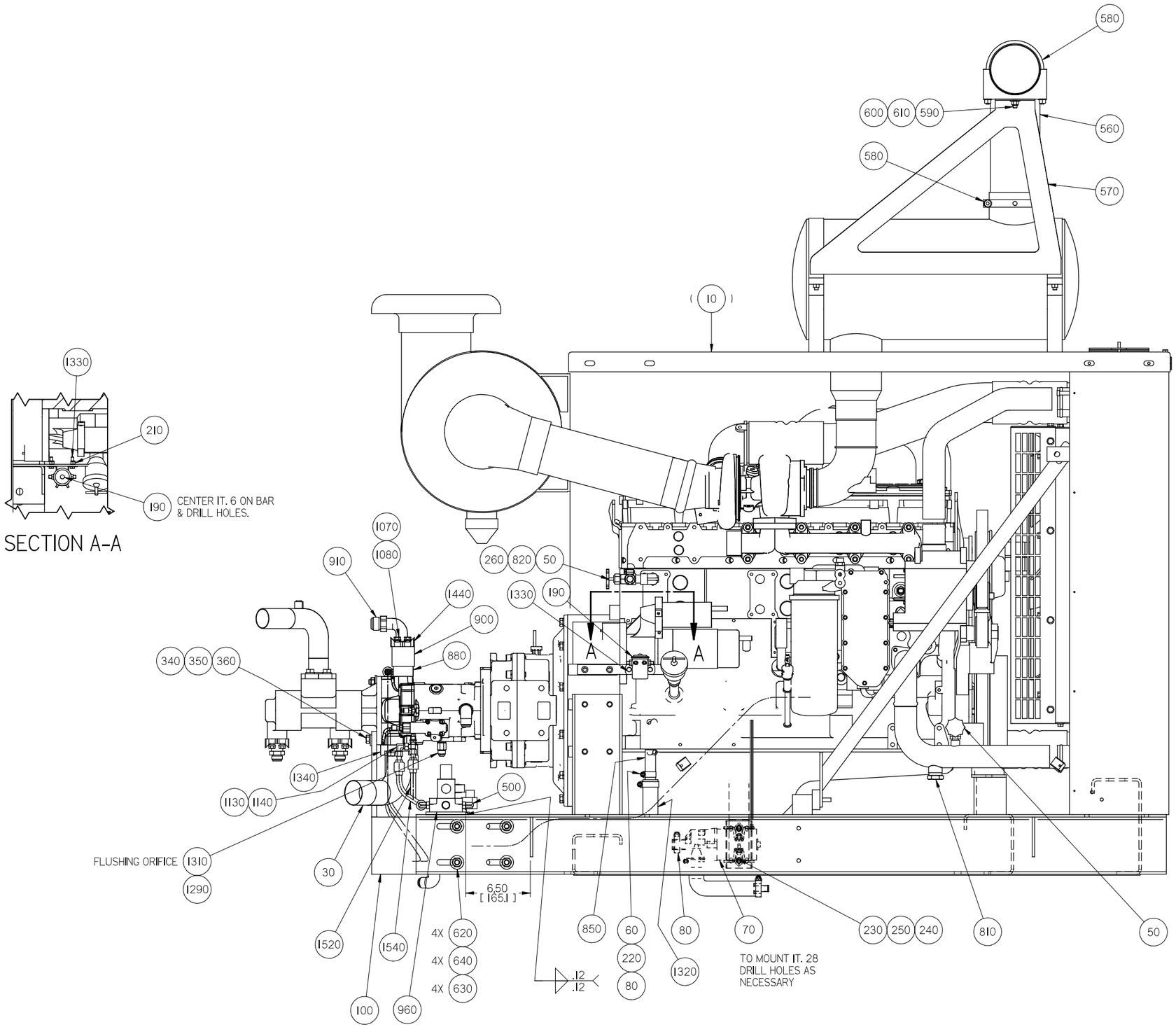

FILL PUMP DRIVE TO THE PROPER OIL LEVEL. ACCORDING TO DIPSTICK, WITH SAE 80W90 MULTI GEAR LUBE (APPROX. 8 PINTS) - (2470-132 IS STAMPED ON THE END OF DIPSTICK)

Inch
[mm]

CONFIDENTIAL

© COPYRIGHT 2011 HARSCO. THIS DRAWING OR DOCUMENT IS THE PROPERTY OF HARSCO AND EMBODIES CONFIDENTIAL INFORMATION, TRADE SECRET INFORMATION, AND/OR KNOW-HOW THAT IS THE PROPERTY OF HARSCO. BY ACCEPTING THIS DRAWING OR DOCUMENT, THE RECIPIENT AGREES (1) NOT TO PROVIDE, OR OTHERWISE MAKE AVAILABLE, THE DRAWING OR DOCUMENT, OR ANY INFORMATION OR KNOW-HOW EMBODIED THEREIN, TO ANY THIRD PARTY AND (2) NOT TO REPRODUCE OR USE THE DRAWING OR DOCUMENT TO MANUFACTURE ANY APPARATUS OR DEVICE, WITHOUT THE PRIOR WRITTEN AUTHORIZATION OF HARSCO.

NOMINAL SIZE RANGE OVER	TO	INCH PLUS OR MINUS 2 PLACE DECIMAL	3 PLACE DECIMAL
0	6	.03	.005
6	24	.04	.008
24	-	.06	.010

NOMINAL SIZE RANGE OVER	TO	METRIC PLUS OR MINUS 1 PLACE DECIMAL	2 PLACE DECIMAL
0	150	.8	.13
150	600	1.0	.20
600	-	1.5	.25

UNLESS OTHERWISE SPECIFIED ALL MACHINED SURFACES WILL HAVE A SURFACE FINISH OF 125 MICROINCHES ANGULAR TOLERANCE OF ±.50° CONCENTRICITY WITHIN .010

THIRD ANGLE PROJECTION

UNLESS OTHERWISE SPECIFIED, ALL WELDS SHOULD ADHERE TO THE MOST CURRENT A.W.S WELDING STANDARDS

CHANGE	R/L	REVISION	DR	DATE
EC500410	A	RELEASE.	BPA	01-25-11
EC501608	B	SEE EC	JRD	07-26-11
EC502288	C	IT #110 WAS PART #5001854, NOW PART #5005833.	RSC	11-08-11

Description: ENGINE SKID ASSEMBLY

HARSCO RAIL

Material: –

Machine Type: MARK IV

Size: D

Weight: 6656.773 lbm

Drawn: badier

Date Drawn: 04-16-09

Part Number: 5004772

Sheet: 3 of 4

SOLID EDGE DRAWING

DO NOT SCALE

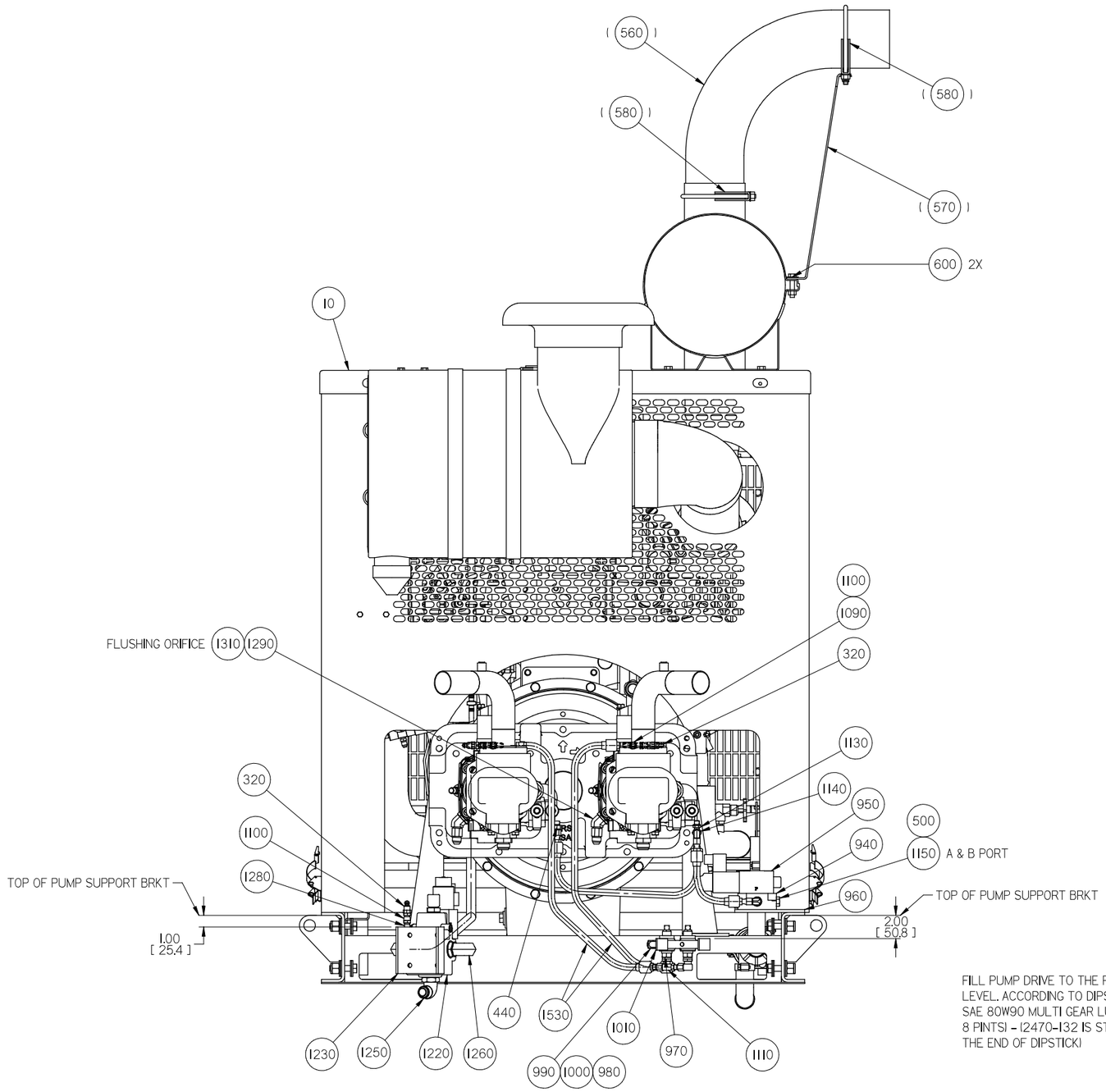

PUMP SUPPORT BRACKET HIDDEN TO SHOW RELIEF AND TRANSDUCER MTG

VIEW "A"

(SHEET #2)

FILL PUMP DRIVE TO THE PROPER OIL LEVEL. ACCORDING TO DIPSTICK, WITH SAE 80W90 MULTI GEAR LUBE (APPROX. 8 PINTS) - (2470-132 IS STAMPED ON THE END OF DIPSTICK)

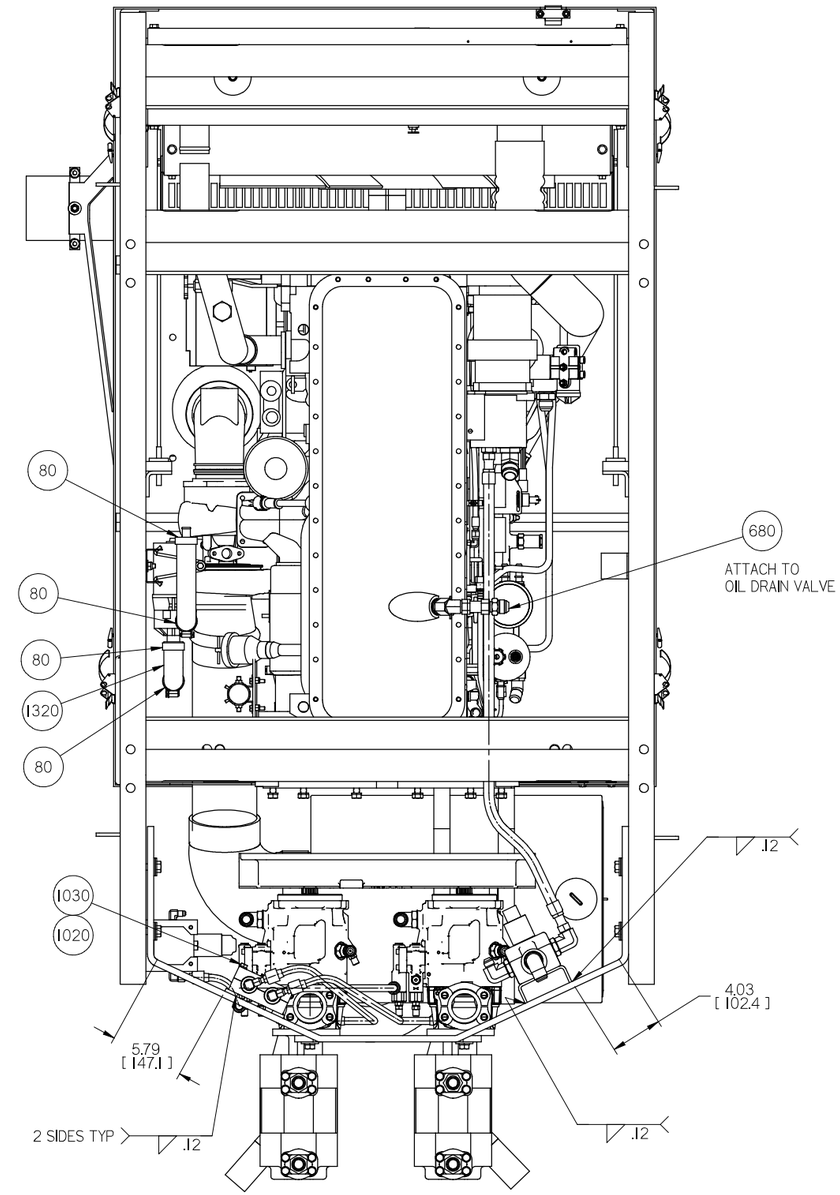

Inch
[mm]

CONFIDENTIAL

© COPYRIGHT 2011 HARSCO. THIS DRAWING OR DOCUMENT IS THE PROPERTY OF HARSCO AND EMBODIES CONFIDENTIAL INFORMATION, TRADE SECRET INFORMATION, AND/OR KNOW-HOW THAT IS THE PROPERTY OF HARSCO. BY ACCEPTING THIS DRAWING OR DOCUMENT, THE RECIPIENT AGREES (1) NOT TO PROVIDE, OR OTHERWISE MAKE AVAILABLE, THE DRAWING OR DOCUMENT, OR ANY INFORMATION OR KNOW-HOW EMBODIED THEREIN, TO ANY THIRD PARTY AND (2) NOT TO REPRODUCE OR USE THE DRAWING OR DOCUMENT TO MANUFACTURE ANY APPARATUS OR DEVICE, WITHOUT THE PRIOR WRITTEN AUTHORIZATION OF HARSCO.

NOMINAL SIZE RANGE		INCH PLUS OR MINUS		NOMINAL SIZE RANGE		METRIC PLUS OR MINUS	
OVER	TO	2 PLACE DECIMAL	3 PLACE DECIMAL	OVER	TO	1 PLACE DECIMAL	2 PLACE DECIMAL
0	6	.03	.005	0	150	.8	.13
6	24	.04	.008	150	600	1.0	.20
24	-	.06	.010	600	-	1.5	.25

UNLESS OTHERWISE SPECIFIED ALL MACHINED SURFACES WILL HAVE;
A SURFACE FINISH OF 125 MICROINCHES
ANGULAR TOLERANCE OF ±.50°
CONCENTRICITY WITHIN .010

THIRD ANGLE PROJECTION

UNLESS OTHERWISE SPECIFIED, ALL WELDS SHOULD ADHERE TO THE MOST CURRENT A.W.S WELDING STANDARDS

CHANGE	R/L	REVISION	DR	DATE
EC500410	A	RELEASE.	BPA	01-25-11
EC501608	B	SEE EC	JRD	07-26-11
EC502288	C	IT #110 WAS PART #5001854, NOW PART #5005833.	RSC	11-08-11

Description: ENGINE SKID ASSEMBLY

HARSCO RAIL

Material: –

Machine Type: MARK IV

Size: D

Weight: 6656.773 lbm

Drawn: badler

Date Drawn: 04-16-09

Part Number: 5004772

Sheet: 4 of 4

SOLID EDGE DRAWING

DO NOT SCALE

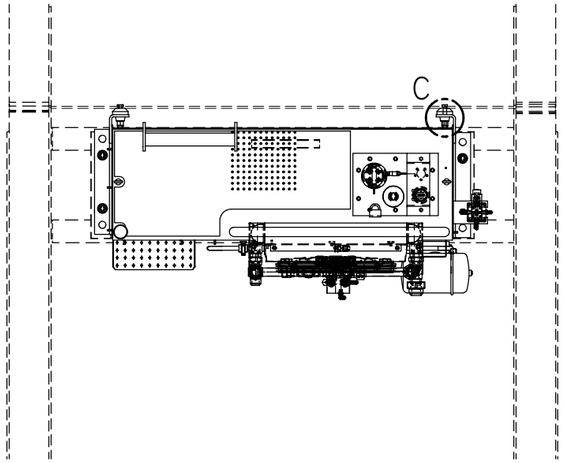

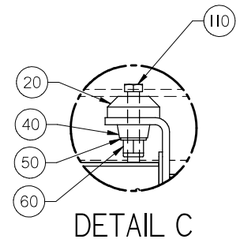

DETAIL C

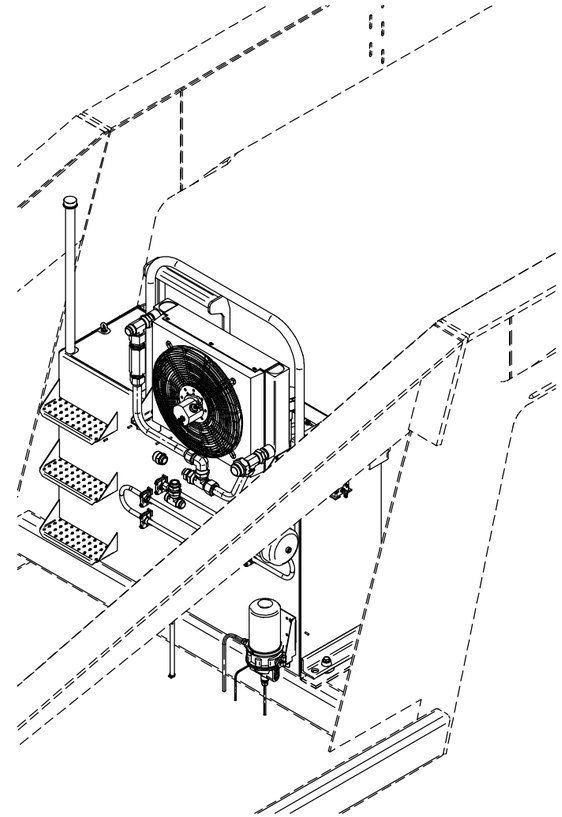

ITEM	PART NO	QTY	DESCRIPTION
20	Z768731-001	6	UPPER SHOCK MOUNT
30	5010152	1	FUEL TANK WLDT & ASSY
40	Z768730-001	6	LOWER SHOCK MOUNT
50	A0059007	6	5/8 MED PL WSHR
60	L40006	6	SEPTA-CMC
80	L425144	1	PADLOCK
90	L422853	1	JIC SWIVEL
100	0-3012000-0-01	1	HOSE CLAMP 1/4" - 3/8"
110	F004253	2	HEX HD CAP SCR 5/8-11X3 3/4 GR
120	F002480	4	HEX HD CAP SCR 5/8-11X4 GR5 ZP
130	L422852	10	1/2 LP HOSE USE F012620

FUEL SUPPLY LINE TO IN-LINE FILTER
ON ENGINE BEFORE LIFT PUMP

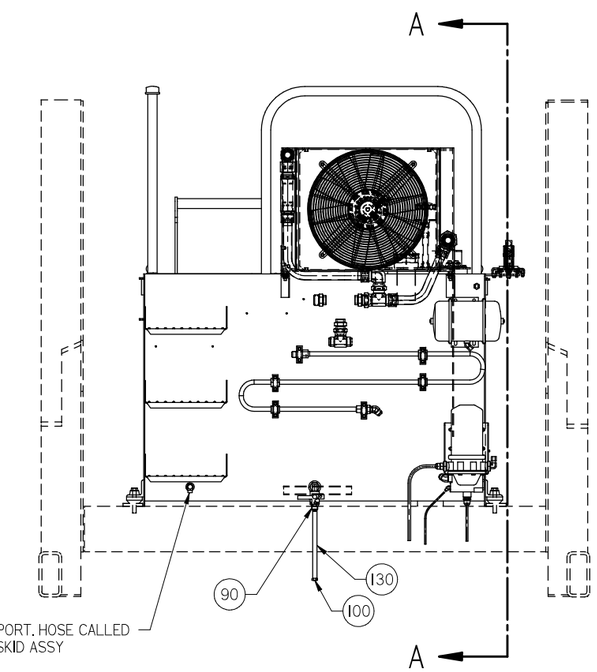

FUEL RETURN PORT. HOSE CALLED
UP ON ENGINE SKID ASSY

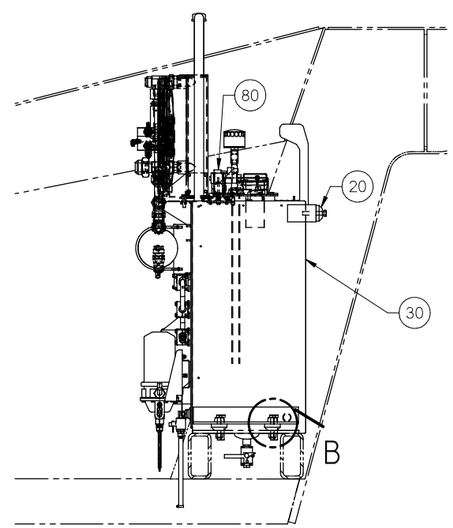

SECTION A-A

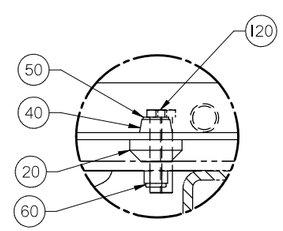

DETAIL B

Inch
[mm]

CONFIDENTIAL
© COPYRIGHT 2011 HARSCO. THIS DRAWING OR DOCUMENT IS THE PROPERTY OF HARSCO AND EMBODIES CONFIDENTIAL INFORMATION, TRADE SECRET INFORMATION, AND/OR KNOW-HOW THAT IS THE PROPERTY OF HARSCO. BY ACCEPTING THIS DRAWING OR DOCUMENT, THE RECIPIENT AGREES (1) NOT TO PROVIDE, OR OTHERWISE MAKE AVAILABLE, THE DRAWING OR DOCUMENT, OR ANY INFORMATION OR KNOW-HOW EMBODIED THEREIN, TO ANY THIRD PARTY AND (2) NOT TO REPRODUCE OR USE THE DRAWING OR DOCUMENT TO MANUFACTURE ANY APPARATUS OR DEVICE, WITHOUT THE PRIOR WRITTEN AUTHORIZATION OF HARSCO.

NOMINAL SIZE RANGE		INCH PLUS OR MINUS		NOMINAL SIZE RANGE		METRIC PLUS OR MINUS	
OVER	TO	2 PLACE DECIMAL	3 PLACE DECIMAL	OVER	TO	1 PLACE DECIMAL	2 PLACE DECIMAL
0	6	.03	.005	0	150	.8	.13
6	24	.04	.008	150	600	1.0	.20
24	-	.06	.010	600	-	1.5	.25

UNLESS OTHERWISE SPECIFIED ALL MACHINED SURFACES WILL HAVE:
A SURFACE FINISH OF 125 MICROINCHES
ANGULAR TOLERANCE OF ±.50°
CONCENTRICITY WITHIN .010

THIRD ANGLE PROJECTION

UNLESS OTHERWISE SPECIFIED, ALL WELDS SHOULD ADHERE TO THE MOST CURRENT A.W.S WELDING STANDARDS

CHANGE	R/L	REVISION	DR	DATE
EC501643	A	NEW RELEASE	JRD	08-02-11

Description: FUEL TANK INSTALLATION

HARSCO RAIL

Material:

Machine Type: MARK IV FUEL TANK

Size: D

Weight:

Drawn: PJG

Date Drawn: 7/29/2011

Part Number: 5010149

Sheet: 1 of 1

SOLID EDGE DRAWING

DO NOT SCALE

ITEM	PART NO	QTY	DESCRIPTION
690	0-3304120-0-11	4	JIC TUBE NUT
700	0-3304121-0-12	4	TUBE SLEEVE
710	0-3304132-0-16	1	1 1/2 X 2 JIC TUBE REDUCER
720	L423021	1	ADAPTOR USE F020162
730	0-3304057-0-06	1	JIC TEE SW. BRANCH
740	L411384	1	PIPE, JIC/MALE USE F011928
750	L425375	1	1 1/2 CHECK VALVE
760	0-3307009-0-04	1	MECHANICAL LEVEL GAUGE
770	0-3304148-0-05	1	SWIVEL JIC/90/JIC FITTIN USE
780	F014778	1	ELB45 12 X 12FS
790*	F013327	1	DC-ELB90 6X6SAE
800	F009099	12	SAE WASHER 7/16
810	F003912	4	HEX HD CAP SCR 7/16-14X1 1/4 G
850	F004832	1	3/4 X 6 NIPPLE
860	252291-1	1	AIR BREATHER FILTER
870	824	1	NYCTA

ITEM	PART NO	QTY	DESCRIPTION
350	A0784Y01	1	STANDOFF
360	A0788Y01	1	COVER GASKET
370	D2711Y05	1	FILLER STRAINER
380	D3752X04	1	FUEL GAUGE COVER
390	D5561Y01	1	SUMP
400	L410594	1	HALF COUPLING, 3/4 NPT
410	L411376	2	FITTNG1/2 MALE PIPE/JC STR USE
420	L420111	1	PLUG, HEX. PIPE
430	L425680	1	FITTING USE F010585
440	L411700	4	NUT, ESNA
450	L420136	1	PIP 45DEG JIC MALE USE F018562
460	L420003	1	PIPE JIC/MALE 90DEG USEF012055
470	D5547Y01	3	STEP
480	C9875Y04	1	LADDER RUNG
490	D2466X01	1	TANK TOP TREAD PLATE
500	4000227	2	STEP SUPPORT
510	0-3304002-0-06	1	BLACK PIPE CAP
520	C3013T44	1	PIPE BLACK
530	D5548X01	1	GUARD RAIL
540	D6789X02	1	PURGE TANK BRACKET
550	D6727Y01	2	FUEL TANK BRKT
560	D6771X01	1	MTG BRKT
570	C0256W01	1	LOWER WRAPPER
580	C0280X01	2	BAFFLE
590	L420110	2	PLUG, HEX. PIPE
600	L411731	1	90 DEG. MP/MP
610	L40306	1	NIPPLE MP/MP USE F011234
620	A0041020	5	10-24 X 1 SOCHD C SCR USE
630	A0036312	2	3/8-16X1 3/8 H/H CAPSCR
640	L411737	1	90 DEG. STREET ELBOW
650	0-3305022-0-16	2	ADAPTER
660	A1556Y21	1	TEMPERATURE SWITCH
670	0-1302631-0-01	1	SUB PLATE MTG BRACKET
680	0-3304028-0-29	4	FITTING

ITEM	PART NO	QTY	DESCRIPTION
10	C9785X15	1	AIR DRYER & PURGE TANK
20	C0255W01	1	UPPER WRAPPER
30	0-3304148-0-13	1	FITTING SW JIC/90 /JIC USE
40	4001055	2	OIL COOLER BRKT
50	4001051	1	OIL COOLER
60	L411531	1	ADAPT, -4JIC/MP 45DEG USE
70	L411383	1	ADAPT, -8MP/-12JIC USE F013210
80	0-1406352-0-01	2	END SUPT BRKT (US TRUSS)
(B) 90*	0-3010036-0-03	2	PAD EYE
100	L424257	1	HEAVY TANK FLANGE
110	L423823	1	1/2' WELDING FLANGE
(B) 120	A0071062	4	1/4-20 X 3/4 WELD STUD USE
130	G4384YAA	6	CLAMP ASSEMBLY
140	H5133WAK	1	M12 FUEL GAGE COND, MKVI
150	A0061006	5	LW #10
160	A0061010	10	3/8 MED LOK WSHR USE F001025
170	A0036064	8	3/8-16 X 1 1/8 HH CAPSCREW
180	0-3330011-0-05	1	BALL VLV PAD LOCKING U/F019835
190	0-3330011-0-07	1	VALVE, BALL .50-14NPT LOCKABLE
200	0-3305022-0-06	4	SPLIT BUSHING
210	G4392XAA	1	COPPER TUBING ASSEMBLY
220	C0271X01	2	FUEL TANK END PLATE
230	4001118	1	AKG 3-WAY THERMOSTATIC VALVE
240	0-3304057-0-17	3	1 1/2FJIC-MJIC-MJIC TSWR USE
250	0-3304028-0-33	1	O-RING BOSS USE F014733
260	L425952	1	O-RING BOSS FITTNG USE F040294
270	407979	1	ADAPTER
280	0-3305020-0-02	5	HYD TBG 1-1/2 OD X .095W
290	G0686XAD	1	FAN MOTOR VALVE ASSY
300	A0041030	4	10-24X1 1/2 S/H CS USE F014871
310	L411127	4	ESNA NUT 10-24 USE F018029K
320	5008142	1	FUEL TANK COVER, WLDT
330	D2710Y02	1	FILLER CAP
340	0-3351008-0-01	1	STRAINER

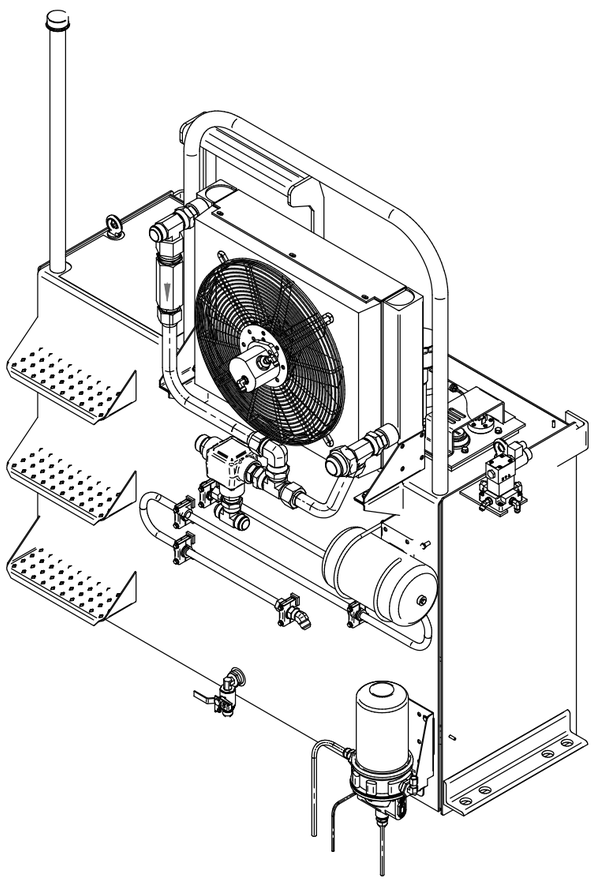

TANK CAPACITY (NO AIR)
192 GAL
1,412 LBS (#2 DIESEL)

Inch
[mm]

CONFIDENTIAL
© COPYRIGHT 2011 HARSCO. THIS DRAWING OR DOCUMENT IS THE PROPERTY OF HARSCO AND EMBODIES CONFIDENTIAL INFORMATION, TRADE SECRET INFORMATION, AND/OR KNOW-HOW THAT IS THE PROPERTY OF HARSCO. BY ACCEPTING THIS DRAWING OR DOCUMENT, THE RECIPIENT AGREES (1) NOT TO PROVIDE, OR OTHERWISE MAKE AVAILABLE, THE DRAWING OR DOCUMENT, OR ANY INFORMATION OR KNOW-HOW EMBODIED THEREIN, TO ANY THIRD PARTY AND (2) NOT TO REPRODUCE OR USE THE DRAWING OR DOCUMENT TO MANUFACTURE ANY APPARATUS OR DEVICE, WITHOUT THE PRIOR WRITTEN AUTHORIZATION OF HARSCO.

NOMINAL SIZE RANGE		INCH PLUS OR MINUS	
OVER	TO	2 PLACE DECIMAL	3 PLACE DECIMAL
0	6	.03	.005
6	24	.04	.008
24	-	.06	.010

NOMINAL SIZE RANGE		METRIC PLUS OR MINUS	
OVER	TO	1 PLACE DECIMAL	2 PLACE DECIMAL
0	150	.8	.13
150	600	1.0	.20
600	-	1.5	.25

UNLESS OTHERWISE SPECIFIED ALL MACHINED SURFACES WILL HAVE;
A SURFACE FINISH OF 125 MICROINCHES
ANGULAR TOLERANCE OF ± 30'
CONCENTRICITY WITHIN .010

THIRD ANGLE PROJECTION

UNLESS OTHERWISE SPECIFIED, ALL WELDS SHOULD ADHERE TO THE MOST CURRENT A.W.S WELDING STANDARDS

CHANGE	R/L	REVISION	DR	DATE
EC501643	A	NEW RELEASE	JRD	08-01-11
EC503469	B	ITEM 90 WAS 0-3010036-0-02; ITEM 120 QTY WAS 14; .38 DIM WAS .56; ADDED 2X FLUSH TO ITEM 40 & WELD SPEC TO ITEM 470.	HW	04-11-12

Description: FUEL TANK WLDT & ASSY

HARSCO RAIL

Material:

Machine Type: MARK IV

Size: D

Weight: 726.242 lbm

Drawn: PJG

Date Drawn: 4/10/2012

Part Number: 5010152

Sheet: 1 of 4

SOLID EDGE DRAWING

DO NOT SCALE

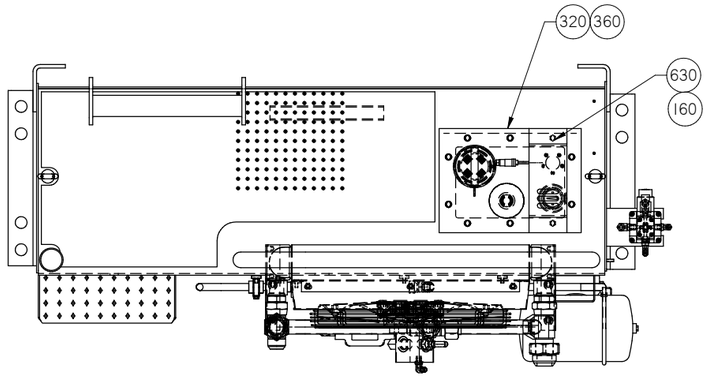

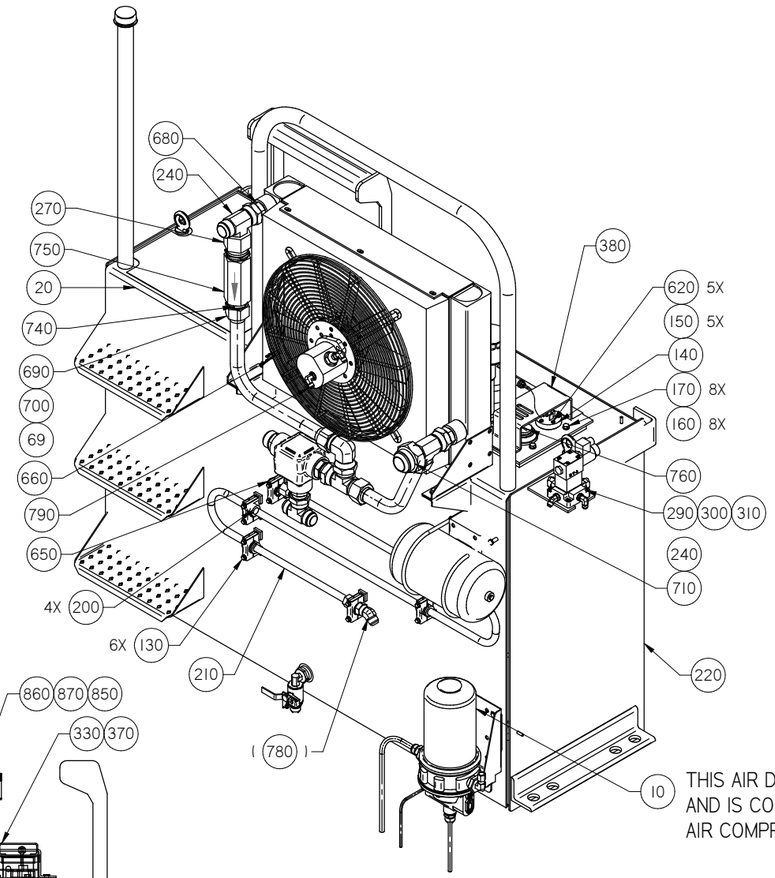

THIS AIR DRYER IS A "STANDARD" NON E-TYPE AND IS COMPATIBLE WITH ALL WABCO (CUMMINS) AIR COMPRESSORS

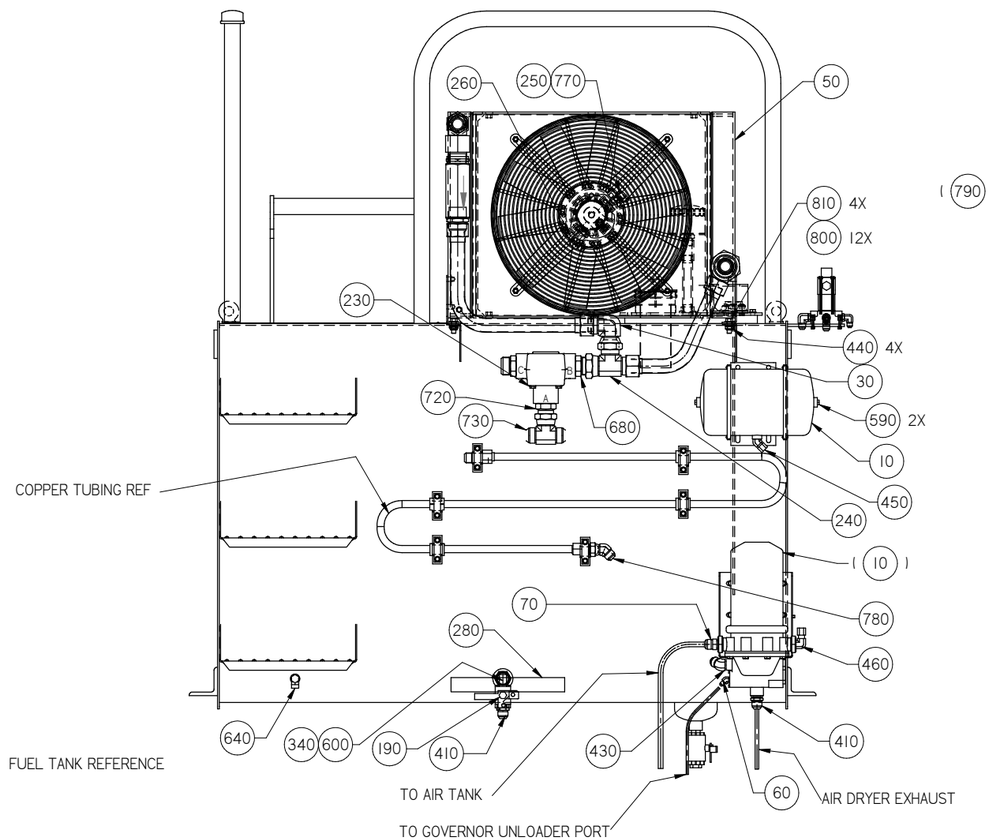

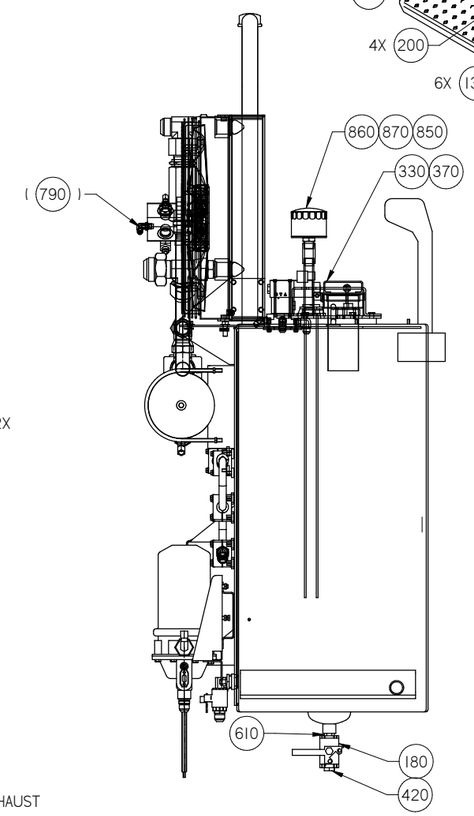

NOTE:
DO NOT PAINT COPPER TUBING

Inch
[mm]

CONFIDENTIAL
© COPYRIGHT 2011 HARSCO. THIS DRAWING OR DOCUMENT IS THE PROPERTY OF HARSCO AND EMBODIES CONFIDENTIAL INFORMATION, TRADE SECRET INFORMATION, AND/OR KNOW-HOW THAT IS THE PROPERTY OF HARSCO. BY ACCEPTING THIS DRAWING OR DOCUMENT, THE RECIPIENT AGREES (1) NOT TO PROVIDE, OR OTHERWISE MAKE AVAILABLE, THE DRAWING OR DOCUMENT, OR ANY INFORMATION OR KNOW-HOW EMBODIED THEREIN, TO ANY THIRD PARTY AND (2) NOT TO REPRODUCE OR USE THE DRAWING OR DOCUMENT TO MANUFACTURE ANY APPARATUS OR DEVICE, WITHOUT THE PRIOR WRITTEN AUTHORIZATION OF HARSCO.

NOMINAL SIZE RANGE		INCH PLUS OR MINUS	
OVER	TO	2 PLACE DECIMAL	3 PLACE DECIMAL
0	6	.03	.005
6	24	.04	.008
24	-	.06	.010

NOMINAL SIZE RANGE		METRIC PLUS OR MINUS	
OVER	TO	1 PLACE DECIMAL	2 PLACE DECIMAL
0	150	.8	.13
150	600	1.0	.20
600	-	1.5	.25

UNLESS OTHERWISE SPECIFIED ALL MACHINED SURFACES WILL HAVE:
A SURFACE FINISH OF 125 MICROINCHES
ANGULAR TOLERANCE OF ± .50°
CONCENTRICITY WITHIN .010

THIRD ANGLE PROJECTION

UNLESS OTHERWISE SPECIFIED, ALL WELDS SHOULD ADHERE TO THE MOST CURRENT A.W.S WELDING STANDARDS

CHANGE	R/L	REVISION	DR	DATE
EC501643	A	NEW RELEASE	JRD	08-01-11
EC503469	B	ITEM 90 WAS 0-3010036-0-02; ITEM 120 QTY WAS 14; .38 DIM WAS .56; ADDED 2X FLUSH TO ITEM 40 & WELD SPEC TO ITEM 470.	HW	04-11-12

Description: FUEL TANK WLDT & ASSY

HARSCO RAIL

Material:
Weight: 726.242 lbm
Machine Type: MARK IV
Drawn: PJG
Date Drawn: 4/10/2012
Part Number: 5010152
Size: D
Sheet: 4 of 4

SOLID EDGE DRAWING
DO NOT SCALE

3PA

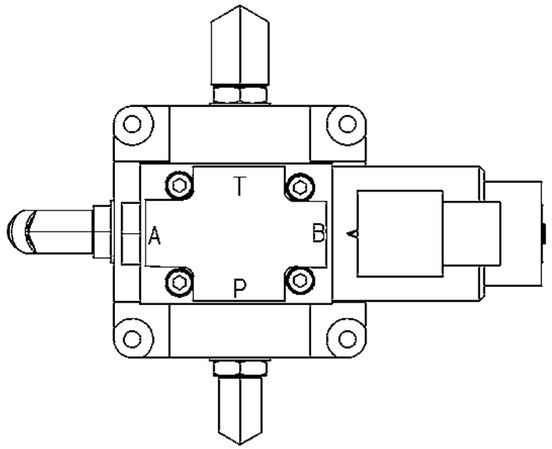

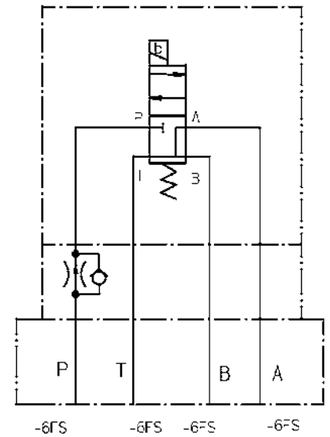

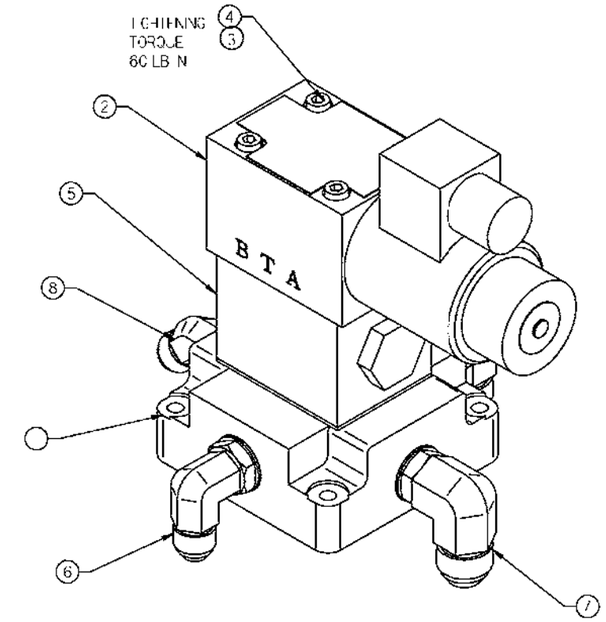

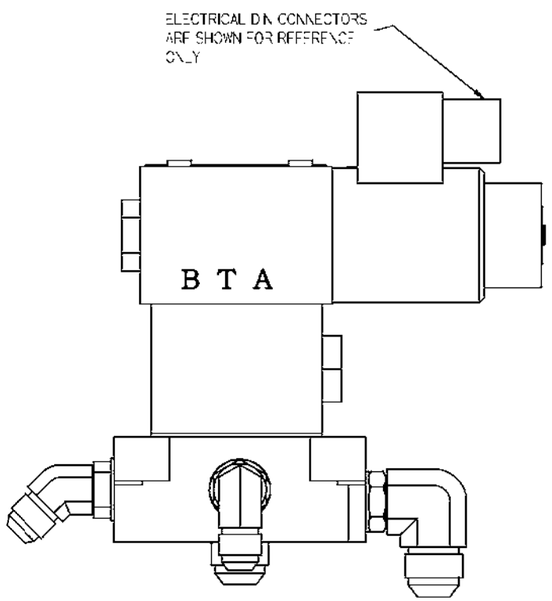

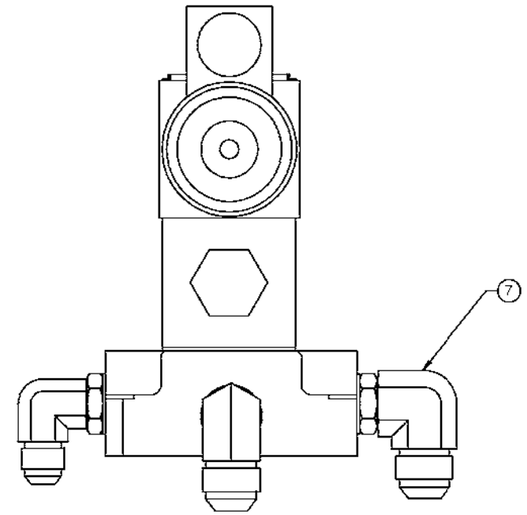

Item Number	Document Number	Title	Quantity
8	FC 3C20	DC-ELB45 6X6SAE 7	1
7	FC24347	3/8 ORB X 1/2 J C 90 DEG	2
6	L41 939	3/8 O RING BOSS J C 90 DEG	1
5	0 333603 D 5	FLOW CONTROL VALVE 1C03	1
4	AC041029	SOC HD CP SCR # 0 24 X 3 3/4	4
3	AC081025	# 8 HIGH COLLAR LOCK WASHER	4
2	C0983YC7	DIR VALVE 2-POS/4-WAY	1
	0-336 006-0-03	SUBPLATE 1C03	1

inch
[mm]

SOLID EDGE DRAWING

CONFIDENTIAL
©COPYRIGHT 2009 HARSCO. THIS DRAWING OR DOCUMENT IS THE PROPERTY OF HARSCO AND EMBODIES CONFIDENTIAL INFORMATION, TRADE SECRET INFORMATION, AND/OR KNOW-HOW THAT IS THE PROPERTY OF HARSCO. BY ACCEPTING THIS DRAWING OR DOCUMENT, THE RECIPIENT AGREES(S) NOT TO PROVIDE OR OTHERWISE MAKE AVAILABLE THE DRAWING OR DOCUMENT, OR ANY INFORMATION CONTAINED THEREIN, TO ANY THIRD PARTY AND NOT TO REPRODUCE OR USE THE DRAWING OR DOCUMENT TO MANUFACTURE ANY APPARATUS OR DEVICE WITHOUT THE PRIOR WRITTEN AUTHORIZATION OF HARSCO.

APPLIED TOLERANCES
UNLESS OTHERWISE NOTED
DECIMAL ±0.010 ±0.005 ±0.002
MESH ±0.1 ±0.05 ±0.02
ANGLE ±0°30' ±0°15' ±0°05'
ALL DIMENSIONS REFER TO MACHINED SURFACES WHEN APPLICABLE
ALL DIMENSIONS ARE FOR FINISHED PART AFTER ALL PROCESSES
DIMENSIONS IN BRACKETS ARE REFERENCE DIMENSIONS
DO NOT SCALE DRAWING
REMOVE ALL BURRS AND SHARP EDGES

CHANGE	REV.	REVISION	DATE
D49840	A	IT 2 WAS C0983Y19, T 7 WAS T424676, IL 6 QTY WAS 2 & ADDED IT 8	8 28 99
D50016	B	T 4 WAS A0041024	9 22 99
D50048	C	ADDED PORT, COMPONENTS TO VIEW, DRILL WAS [illegible]	[illegible]

DRAWING TITLE: FAN MOTOR VALVE ASSY
DRAWING NUMBER: ----------
MODEL: Mark IV
FILE: G0686XAD.dsm
DRAWN: hwiggins 9 25 03
WEIGHT: 0.000 lbm
SCALE: 1:4
APVD: JBR
APVD: JBR
DATE: [illegible]
HARSCO RAIL
DOCUMENT: G0686XAD
SIZE: D
SHEET: 1 of 1

Plotted by hwiggins on 8/ /2010 G0686XAD.dif

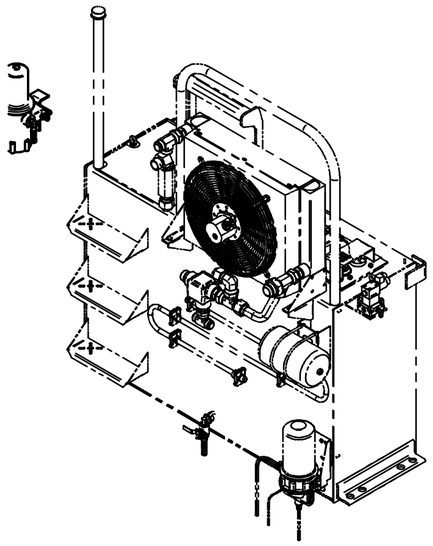

Item Number	Part Number	Description	Quantity
1	A4656Y21	FUEL FILTER	1
3	F001125	HHCS .375-16X1.25	2
4	F009681	SAE FLAT WASHER .375	2
5	F015922	HEX ELASTIC STOP NUT .375-16	2
6	F012054	DC ELB90 8X8NPT	2
7	0-3304135-0-07	JIC- SW -ST HOSE END	3
8	0-3305003-0-03	ENGINE & AIR BRAKE HOSE (FT)	20

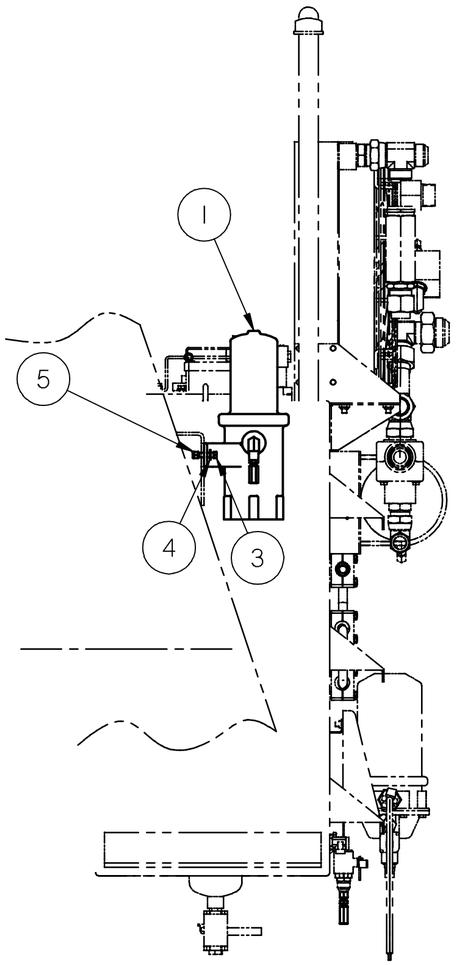

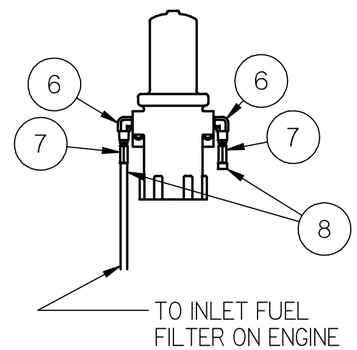

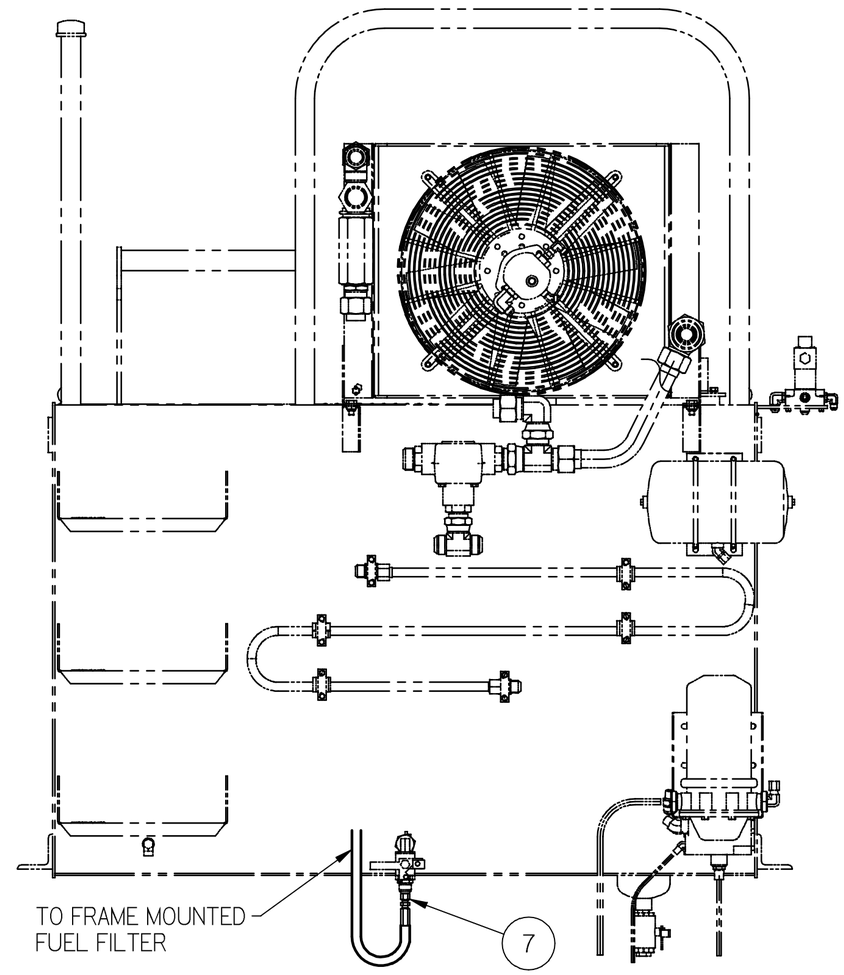

SOLID EDGE DRAWING

CONFIDENTIAL

© COPYRIGHT 2001 HARSCO TRACK TECHNOLOGIES. THIS DRAWING OR DOCUMENT IS THE PROPERTY OF HARSCO TRACK TECHNOLOGIES AND EMBODIES CONFIDENTIAL INFORMATION, TRADE SECRET INFORMATION, AND/OR KNOW-HOW THAT IS THE PROPERTY OF HARSCO TRACK TECHNOLOGIES. BY ACCEPTING THIS DRAWING OR DOCUMENT, THE RECIPIENT AGREES (1) NOT TO PROVIDE, OR OTHERWISE MAKE AVAILABLE, THE DRAWING OR DOCUMENT, OR ANY INFORMATION OR KNOW-HOW EMBODIED THEREIN, TO ANY THIRD PARTY AND (2) NOT TO REPRODUCE OR USE THE DRAWING OR DOCUMENT TO MANUFACTURE ANY APPARATUS OR DEVICE, WITHOUT THE PRIOR WRITTEN AUTHORIZATION OF HARSCO TRACK TECHNOLOGIES.

IMPLIED TOLERANCES

ALL DIMENSIONS ARE IN INCHES - TOLERANCE UNLESS OTHERWISE SPECIFIED

NOMINAL SIZE RANGE		INCH PLUS OR MINUS		NOMINAL SIZE RANGE		METRIC PLUS OR MINUS	
OVER	TO	2 PLACE DECIMAL	3 PLACE DECIMAL	OVER	TO	1 PLACE DECIMAL	2 PLACE DECIMAL
0	6	.03	.005	0	150	.8	.13
6	24	.04	.008	150	600	1.0	.20
24	-	.06	.010	-	600	1.5	.25

UNLESS OTHERWISE SPECIFIED ALL MACHINED SURFACES WILL HAVE;
A SURFACE FINISH OF 125 MICROINCHES
ANGULAR TOLERANCE OF ±.50°
CONCENTRICITY WITHIN .010

THIRD ANGLE PROJECTION

UNLESS OTHERWISE SPECIFIED ALL WELDS SHOULD ADHERE TO THE LATEST HTT WELDING SPECIFICATION 101

CHANGE	R/L	REVISION	DATE
ECN-102643	A	RELEASE	3-30-09
ECN-105055	B	DEL IT 2 (4021236), IT 8 QTY WAS 10 FT, IT 3 WAS A0036067 A0 HW	8 JAN 10

Description: FUEL FILTER INSTALLATION

Drawing Number: ---------- FUEL FILTER INSTALLATION

Machine Type:

Model: 4021237.asm

Drawn: bbrunson

Date Drawn: 3-30-09

Weight: 0.0 lbm

Scale: 1:4

APVD Desg: HW

APVD ChEng: HW

Mat'l: - -

HTT
Harsco Track Technologies
Harsco
Columbia, SC

Part Number: 4021237

Size: C

Sheet: 1 of 1

Plotted by aouzts on 9/9/2010 4021237.dft

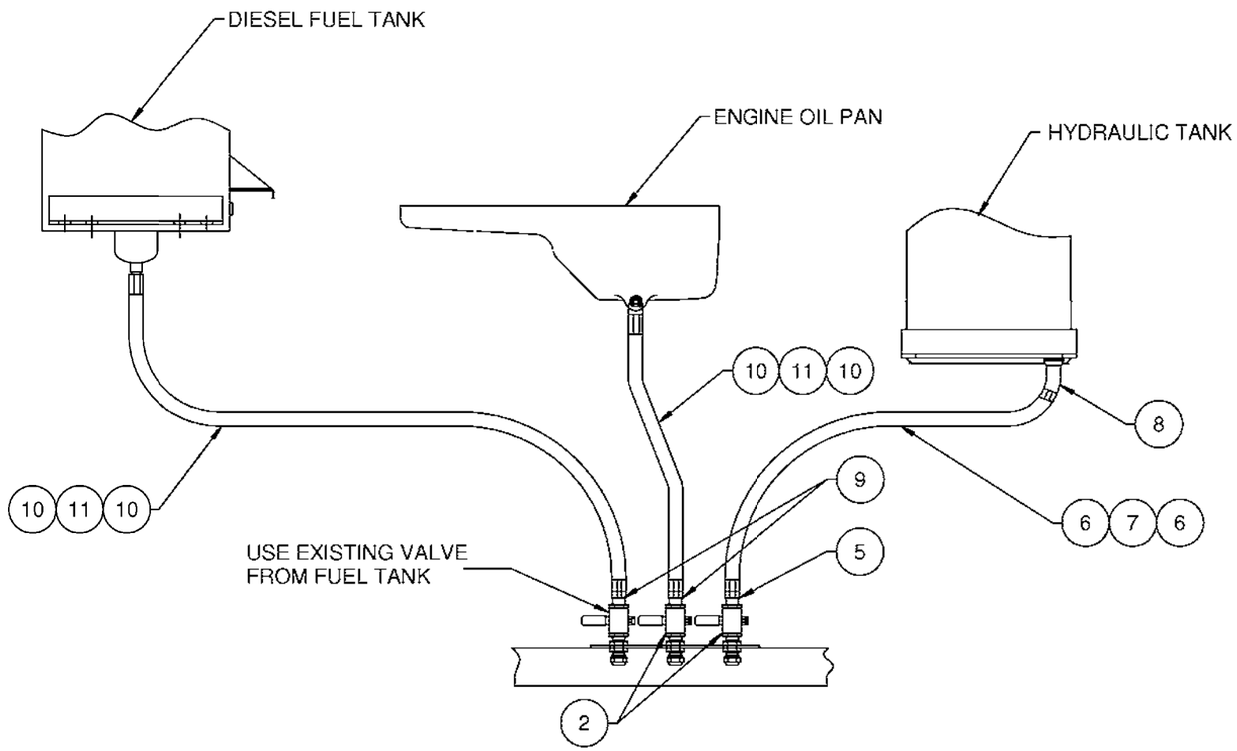

NOTES:
1. REMOVE DIRECTION ARROWS FROM VALVE BODY CASTINGS
2. INSTALL VALVES SO THAT HANDLES ARE ORIENTED AS SHOWN
3. HOSE LENGTHS NOT TO SCALE
4. REPLACE EXISTING ENGINE OIL DRAIN HOSE WITH 3/4 HOSE, ITEM 11.
5. PAINT MTG PLATE AS FOLLOWS; FUEL SECTION (LEFT) GREEN, ENGINE OIL (CENTER) YELLOW, HYDRAULIC (RIGHT) BLUE

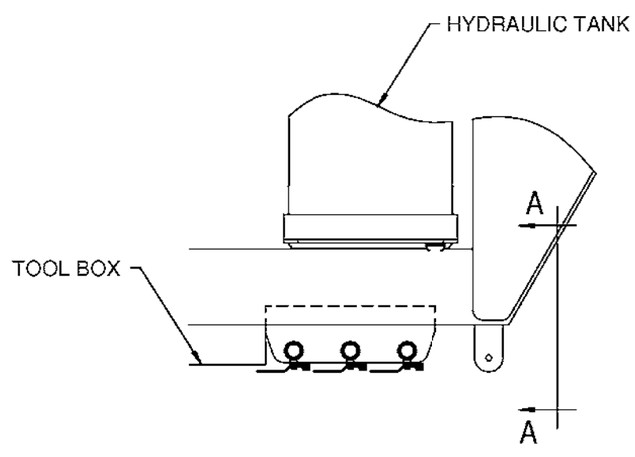

RIGHT FRONT OF MACHINE

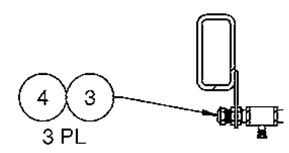

SECTION A-A

ITEM NUMBER	PART NUMBER	DESCRIPTION	QUANTITY
2	F019835	BALL VLV PAD LOCKING	2
3	A1302Y01	ADAPTER	3
4	F017138	CAP, -12 JIC	3
5	L420092	PIPE, JIC/MALE 45 DEG.	1
6	L411530	HOSE END, -16 JIC SW	2
7	L420215	HOSE, -16 MED PRES (FT)	1
8	F012496	PIP JIC/MALE 45DEG	1
9	F010581	ADAPTOR, JIC/MALE	2
10	0-3304135-0-12	HOSE END, -12 JIC SW	4
11	L411422	3/4 MP HOSE (FT)	30

SOLID EDGE DRAWING

CONFIDENTIAL

© COPYRIGHT 2011 HARSCO TRACK TECHNOLOGIES. THIS DRAWING OR DOCUMENT IS THE PROPERTY OF HARSCO TRACK TECHNOLOGIES AND IS CONFIDENTIAL INFORMATION, TRADE SECRET INFORMATION, AND ACKNOWLEDGED THAT IS THE PROPERTY OF HARSCO TRACK TECHNOLOGIES. BY ACCEPTING THIS DRAWING OR DOCUMENT THE RECIPIENT AGREES: (1) NOT TO PROVIDE, OR OTHERWISE MAKE AVAILABLE, THE DRAWING OR DOCUMENT OR ANY INFORMATION CONTAINED HEREIN TO ANY THIRD PARTY AND (2) NOT TO REPRODUCE OR REPRODUCE THE DRAWING OR DOCUMENT TO MANUFACTURE ANY APPARATUS OR DEVICE WITHOUT THE PRIOR WRITTEN AUTHORIZATION OF HARSCO TRACK TECHNOLOGIES

UNLESS OTHERWISE SPECIFIED ALL DIMENSIONS ARE IN INCHES TOLERANCE: .XX ±.03 .XXX ±.010 ANGLES ±1°

MATERIAL: SEE MATERIAL LIST

FINISH: PAINT PER SPECIFICATION

DO NOT SCALE DRAWING

THIRD ANGLE PROJECTION

CHANGE	BY	REVISION	DATE
ECN 102840		[illegible]	[illegible]

DESCRIPTION: REMOTE FLUID DRAIN INSTL

DRAWING NO: ----------

MODEL: MARK IV

PART NO: G2454WAA ESTI

DRAWN: rowell 2-25-97

SCALE: 1:4

APPD: DGV

MFG APPD: AM

SIZE: D

REV: 1

G2454WAA

HTT
Harsco Track Technologies
Harsco
Columbia, SC

Plotted by bbrunson on 4/23/2009 G2454WAA.dft

DRIVE TRAIN COMPONENTS

ITEM	PART NO	QTY	DESCRIPTION
10	5004726	1	FRONT AXLE ASSY
20	218177-1	2	PIVOT PIN
30	112497-1	4	SPACER
40	F016971	4	RETAINING RING
50	340311-1	2	HYDRAULIC CYLINDER
60	217959-2	4	TEARDROP PIN- 1.250 DIA
70	H3948Y05	4	DISC LOCK WASHER
80	F003136	4	DC-HEX HD CAP SCR 1/2-13X1 GR5
90	158350-1	2	VALVE, 24VDC SOLENOID
100	L411939	2	ADAPT, -6 ORB/JIC90 USE F013327
110	5005876	1	DECKING, RH FRONT
120	5006203	1	DECKING, CR FRONT
130	5006204	1	DECKING, CL FRONT
140	5005879	1	DECKING, LH FRONT
150	5009226	3	SHIM, PIVOT FRME

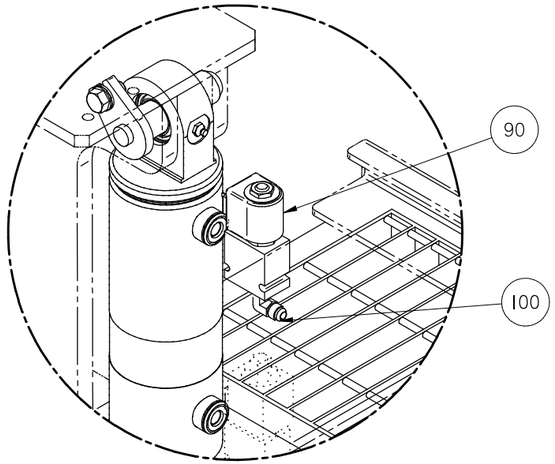

DETAIL A

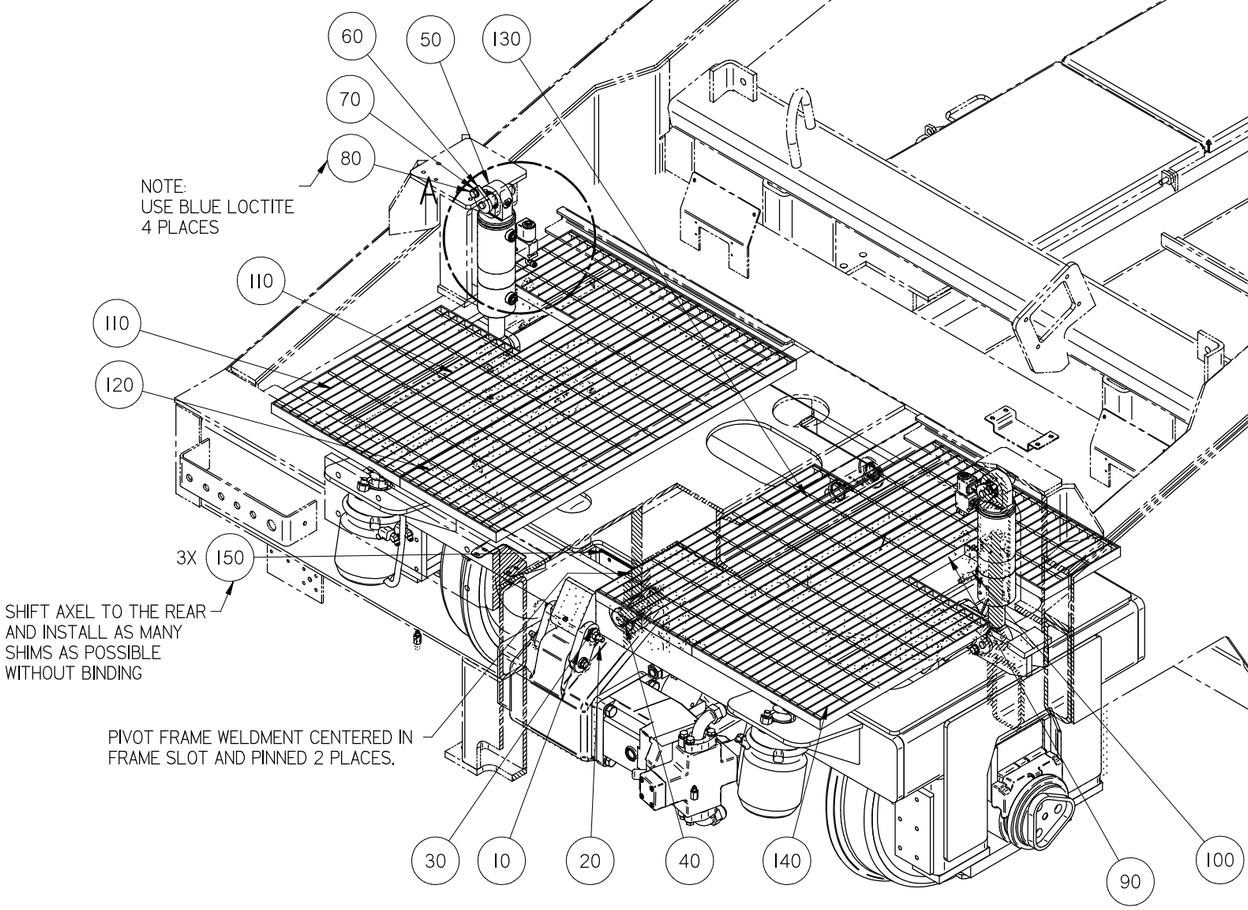

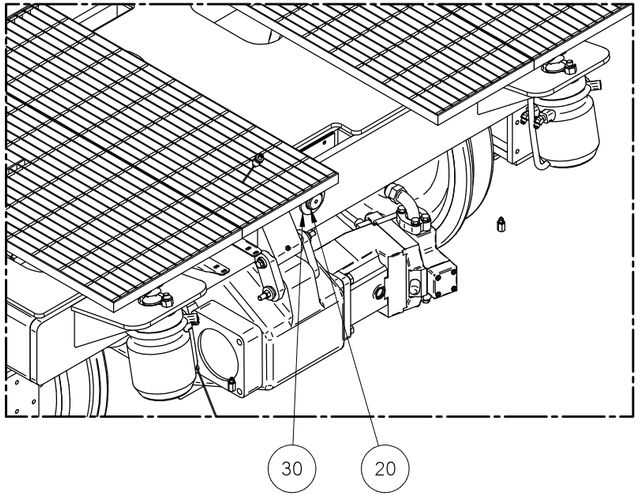

SIMILAR TO #2019120, 5009398

Inch
[mm]

CONFIDENTIAL

© COPYRIGHT 2010 HARSCO. THIS DRAWING OR DOCUMENT IS THE PROPERTY OF HARSCO AND EMBODIES CONFIDENTIAL INFORMATION, TRADE SECRET INFORMATION, AND/OR KNOW-HOW THAT IS THE PROPERTY OF HARSCO. BY ACCEPTING THIS DRAWING OR DOCUMENT, THE RECIPIENT AGREES (1) NOT TO PROVIDE, OR OTHERWISE MAKE AVAILABLE, THE DRAWING OR DOCUMENT, OR ANY INFORMATION OR KNOW-HOW EMBODIED THEREIN, TO ANY THIRD PARTY AND (2) NOT TO REPRODUCE OR USE THE DRAWING OR DOCUMENT TO MANUFACTURE ANY APPARATUS OR DEVICE, WITHOUT THE PRIOR WRITTEN AUTHORIZATION OF HARSCO.

NOMINAL SIZE RANGE		INCH PLUS OR MINUS	
OVER	TO	2 PLACE DECIMAL	3 PLACE DECIMAL
0	6	.03	.005
6	24	.04	.008
24	-	.06	.010

NOMINAL SIZE RANGE		METRIC PLUS OR MINUS	
OVER	TO	1 PLACE DECIMAL	2 PLACE DECIMAL
0	150	.8	.13
150	600	1.0	.20
600	-	1.5	.25

UNLESS OTHERWISE SPECIFIED ALL MACHINED SURFACES WILL HAVE:
A SURFACE FINISH OF 125 MICROINCHES
ANGULAR TOLERANCE OF ±.50°
CONCENTRICITY WITHIN .010

THIRD ANGLE PROJECTION

UNLESS OTHERWISE SPECIFIED, ALL WELDS SHOULD ADHERE TO THE MOST CURRENT A.W.S WELDING STANDARDS

CHANGE	R/L	REVISION	DR	DATE
EC500706	A	NEW RELEASE	LR/HW	03-21-11
EC501327	B	ADDED ITEMS 110, 120,130, 140 & 150	HW	06-23-11
EC501669	C	90 WAS A07729Y06	BPA	8/2/11
EC502062	D	PICTORIAL VIEW UPDATED	SRK	09-30-11

Description: FRONT AXLE INSTALLATION

HARSCO RAIL

Material: SEE PARTS LIST

Machine Type: MARK IV

Size: D

Weight: 5461.9 lbm

Drawn: LRoldan

Date Drawn: 3/24/2011

Part Number: 5006913

Sheet: 1 of 1

SOLID EDGE DRAWING

DO NOT SCALE

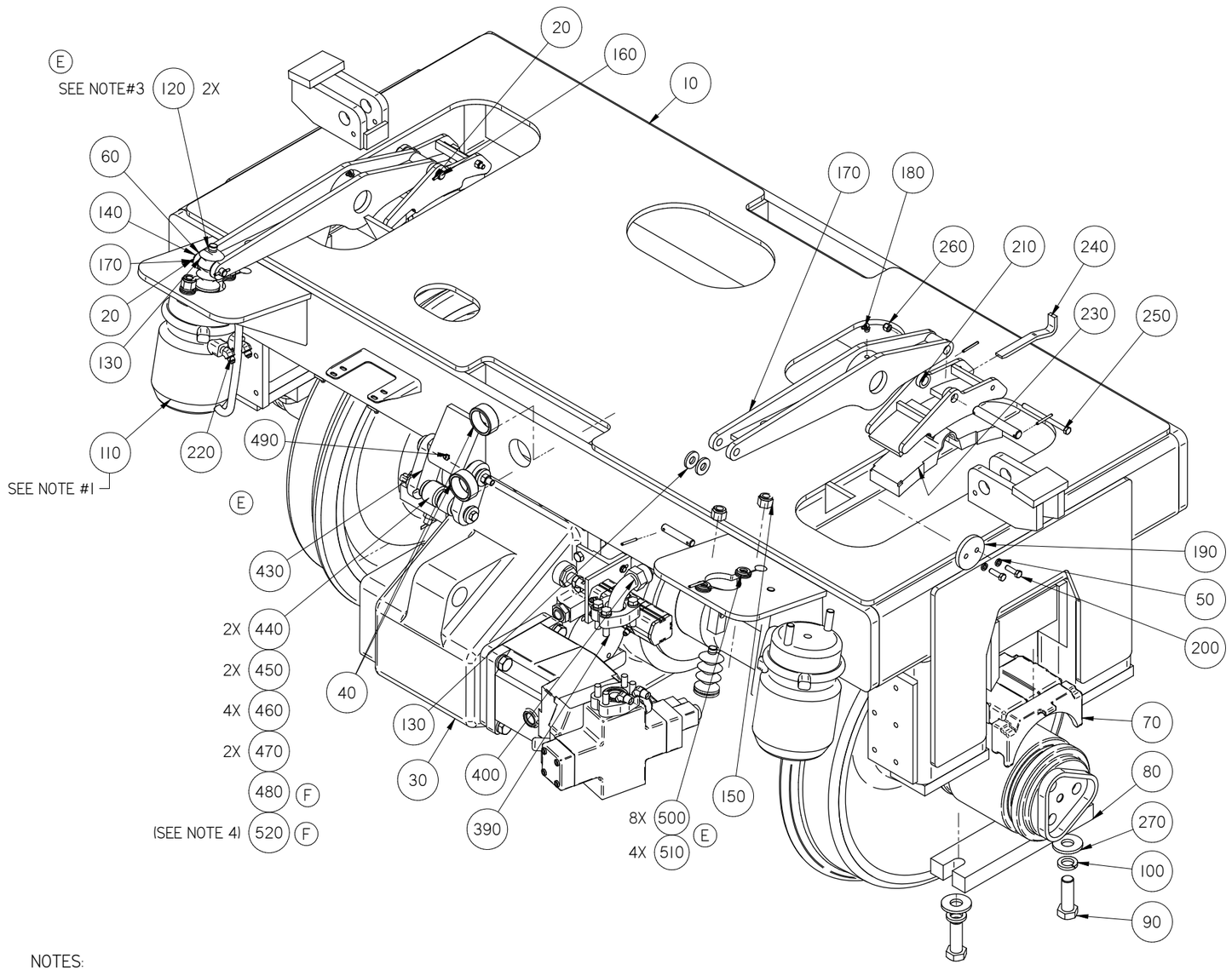

	Item Number	Part Number	Description	Quantity
	10	5004692	PIVOT FRAME WELDMENT	1
	20	F012413	ROLL PIN .188 X 1.75	8
	30	2019160	DRIVE AXLE SUB-ASSEMBLY	1
	40	4166	HARDENED BUSHING	4
	50	F011455	DC-3/8 LW *	4
	60	2012366	PROTECTIVE BOOT	2
	70	411214-1	BEARING ADAPTER MACHINED	2
	80	219067-1	TIE PLATE	2
	90	F013119	HHCS 1.00-8X3.00	4
	100	F001657	LW 1.00	4
	110	223027-1	BRAKE CHAMBER REWORK	2
	120	217283-1	ROD END - REAR	2
	130	217280-1	SPACER	4
	140	217282-1	PIN	2
	150	F017188	ESNA NUT 5/8-11	4
	160	112496-1	PIN	2
	170	312289-1	ARM WELDING	2
	180	F009217	ZERK ELB90 X 02NPT	2
	190	217281-1	RETAINER	2
	200	F010277	HHCS .375-24X1.25	4
	210	312252-1	SHOE HOLDER	2
	220	F018562	ELB45 6X6NPT	4
	230	218045-1	BRAKE SHOE	2
	240	112482-1	BRAKE SHOE RETAINER	2
	250	F001530	HHCS .375-16X5.00	2
	260	F015922	DC-3/8-16 ELASTIC STOP NUT *	2
E	270	111560-1	WASHER	4
	390	F040260	SPLIT FLANGE KIT	2
	400	0-3304194-0-02	SPLIT FLG/JIC 90 DEG	2
	430	5011406	LINK	2
	440*	222221-1	BUSHING	2
	450	250010-270	SCREW-HHC, .50-20 X 8.00 LG	2
	460	MT223-B	WASHER	4
	470	153140-820	LOCKNUT - GRADE 5 .50-20	2
F	480	5016946	CENTER BONDED JOINT	1
	490	150009-1	GREASE FITTING- STR, .12	1
E	500	F009425	SAE FLAT WASHER .625	8
E	510	F001103	LW .625	4
F	520	5016687	LUBRICANT, RUBBER	1

NOTES:

1. TIGHTEN BRAKE RELEASE BOLT TO 40-45 FT. LBS. (2) PLACES.

2. USE AIR PRESSURE TO RETRACT BRAKE CHAMBER, ITEM #20, AND ADJUST ROD END, ITEM #90 TO OBTAIN A GAP OF .06" BETWEEN BRAKE SHOE, ITEM #50, AND WHEEL.

(E) 3. WHEN INSTALLING ITEM #120 USE BOTTOM HOLE.

(F) 4. BEFORE INSTALLING ITEM 500 INTO DRIVE AXLE USE RUBBER LUBRICANT.

SIMILAR TO #2019120

Inch [mm]

CONFIDENTIAL
© COPYRIGHT 2010 HARSCO. THIS DRAWING OR DOCUMENT IS THE PROPERTY OF HARSCO AND EMBODIES CONFIDENTIAL INFORMATION, TRADE SECRET INFORMATION, AND/OR KNOW-HOW THAT IS THE PROPERTY OF HARSCO. BY ACCEPTING THIS DRAWING OR DOCUMENT, THE RECIPIENT AGREES (1) NOT TO PROVIDE, OR OTHERWISE MAKE AVAILABLE, THE DRAWING OR DOCUMENT, OR ANY INFORMATION OR KNOW-HOW EMBODIED THEREIN, TO ANY THIRD PARTY AND (2) NOT TO REPRODUCE OR USE THE DRAWING OR DOCUMENT TO MANUFACTURE ANY APPARATUS OR DEVICE, WITHOUT THE PRIOR WRITTEN AUTHORIZATION OF HARSCO.

NOMINAL SIZE RANGE OVER	TO	INCH PLUS OR MINUS 2 PLACE DECIMAL	3 PLACE DECIMAL
0	6	.03	.005
6	24	.04	.008
24	-	.06	.010

NOMINAL SIZE RANGE OVER	TO	METRIC PLUS OR MINUS 1 PLACE DECIMAL	2 PLACE DECIMAL
0	150	.8	.13
150	600	1.0	.20
600	-	1.5	.25

UNLESS OTHERWISE SPECIFIED ALL MACHINED SURFACES WILL HAVE:
A SURFACE FINISH OF 125 MICRONCHES
ANGULAR TOLERANCE OF ± .50°
CONCENTRICITY WITHIN .010

THIRD ANGLE PROJECTION

UNLESS OTHERWISE SPECIFIED, ALL WELDS SHOULD ADHERE TO THE MOST CURRENT A.W.S WELDING STANDARDS

CHANGE	R/L	REVISION	DR	DATE
EC503124	E	DEL ITEM 380 WAS F023087, ADDED ITEMS 500, 510 & NOTE #3	HW	03-12-12
EC503235	F	ITEM 480 WAS 250703-1; ADDED ITEM 520 AND NOTE 4.	HW	03-16-12

Description: FRONT AXLE ASSY

HARSCO RAIL

Material: -
Weight: 5369.7 lbm
Machine Type: MARK IV
Drawn: rcole
Date Drawn: 02-01-11
Part Number: 5004726
Size: D
Sheet: 1 of 1

SOLID EDGE DRAWING — DO NOT SCALE

Plotted by hwiggins on 3/22/2012 5004726.dft

ITEM	PART NO	QTY	DESCRIPTION
10	2019159	1	DRIVE AXLE ASSEMBLY
20	220782-1	1	ADAPTER, SPECIAL
30	F008551	1	3/8 PIPE PLUG
130	3400890	3	SWITCH, PROXIMITY, 8MM
160	250630-48	4	SCREW-SOC HD CAP, M6 X 1.0 F X 25MM LG
170	4022050	4	WASHER-LOCK, M6
180	F018860	2	1/2-13X2 3/4 HH CS GR 8-ZP
190	F014212	1	DC-HEX JAM NUT 5/8-18 GR2 ZP *
200	2013625	1	AIR CYLINDER - DOUBLE
210	2006509	1	SPEED SENSOR
220	4029264	1	MOTOR, VAR. DISP.
240	F001354	4	DC-SAE RGLR LOCK WASHER 3/4 ZP
250	F007985	4	HHCS 3/4-10 X 2 GR5 ZP
260	F013193	4	ADAPTER 1/8 MP-1/4 JIC
270	5009448	1	ANGLE, SHIFT BRKT
280	5009444	1	BACK PLATE, SHIFT BRKT
290	150973-2	4	1/4" Type A Plain Washer
300	250010-6	2	SCREW HHC 1/4-20 X 1 1/4
310	153140-420	2	1/4-20 NYLON INS NUT

SPEED SENSOR (REF. #210) INSTALLATION:

THE AIR GAP BETWEEN THE GEAR AND THE PICKUP MUST BE SET FOR .048 TO .062. THIS CAN BE SET BY TURNING IN THE PICKUP UNTIL IT TOUCHES THE GEAR O.D. AND THEN SCREW OUT THE PICKUP 3/4 TO 1 TURN TO OBTAIN .048 TO .062

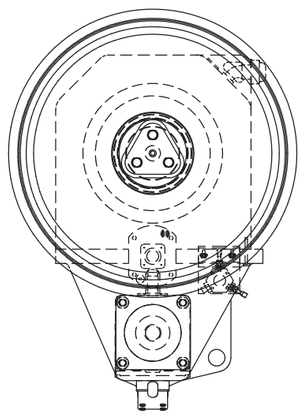

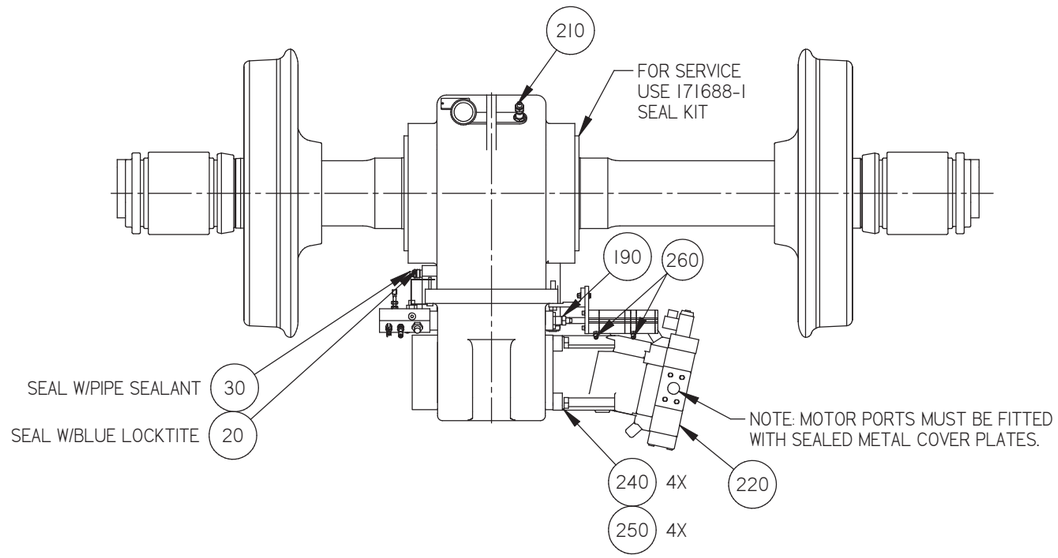

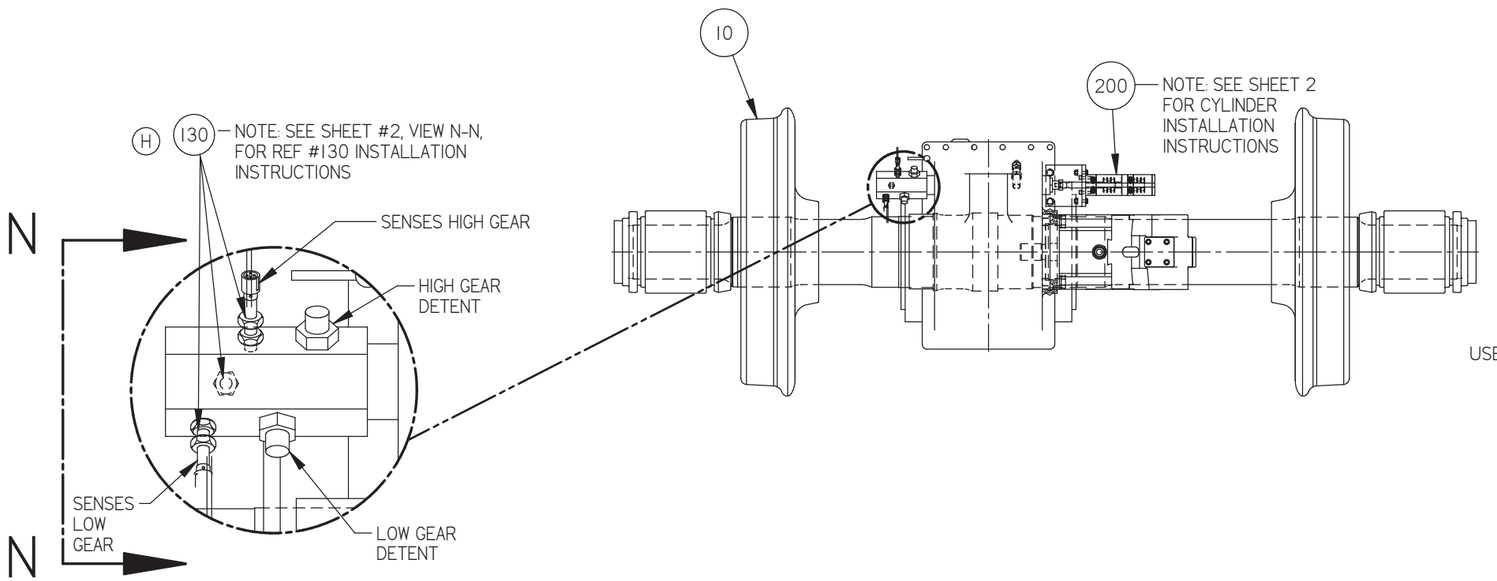

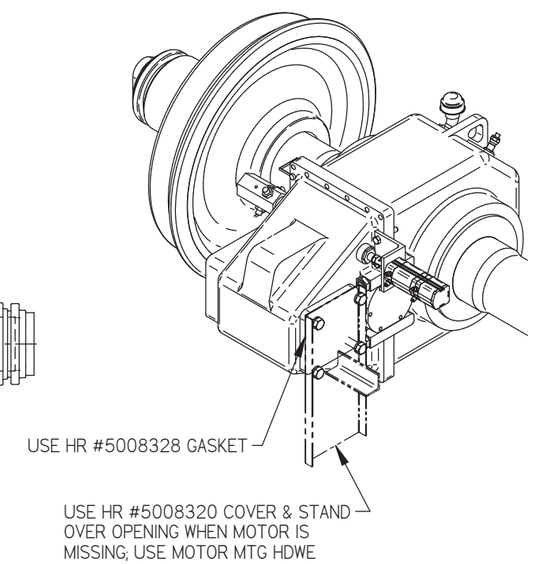

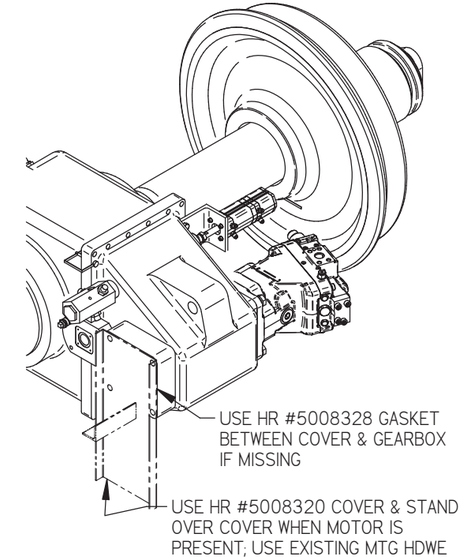

SHIPPING / STORAGE INFO

NOTE:
DO NOT DISCARD STAND OR GASKET
AFTER INSTALLING AT NEXT LEVEL;
RETURN TO LARGE ASSEMBLY FOR RE-USE

Inch [mm]

CONFIDENTIAL
© COPYRIGHT 2011 HARSCO. THIS DRAWING OR DOCUMENT IS THE PROPERTY OF HARSCO AND EMBODIES CONFIDENTIAL INFORMATION, TRADE SECRET INFORMATION, AND/OR KNOW-HOW THAT IS THE PROPERTY OF HARSCO. BY ACCEPTING THIS DRAWING OR DOCUMENT, THE RECIPIENT AGREES (1) NOT TO PROVIDE, OR OTHERWISE MAKE AVAILABLE, THE DRAWING OR DOCUMENT, OR ANY INFORMATION OR KNOW-HOW EMBODIED THEREIN, TO ANY THIRD PARTY AND (2) NOT TO REPRODUCE OR USE THE DRAWING OR DOCUMENT TO MANUFACTURE ANY APPARATUS OR DEVICE, WITHOUT THE PRIOR WRITTEN AUTHORIZATION OF HARSCO.

NOMINAL SIZE RANGE		INCH PLUS OR MINUS		NOMINAL SIZE RANGE		METRIC PLUS OR MINUS	
OVER	TO	2 PLACE DECIMAL	3 PLACE DECIMAL	OVER	TO	1 PLACE DECIMAL	2 PLACE DECIMAL
0	6	.03	.005	0	150	.8	.13
6	24	.04	.008	150	600	1.0	.20
24	-	.06	.010	600	-	1.5	.25

UNLESS OTHERWISE SPECIFIED ALL MACHINED SURFACES WILL HAVE:
A SURFACE FINISH OF 125 MICRONCHES
ANGULAR TOLERANCE OF +/- 50'
CONCENTRICITY WITHIN: .010

THIRD ANGLE PROJECTION

UNLESS OTHERWISE SPECIFIED, ALL WELDS SHOULD ADHERE TO THE MOST CURRENT A.W.S WELDING STANDARDS

CHANGE	R/L	REVISION	DR	DATE
EC500075	D	SEE EC	DBB	05-11-11
EC501493	E	ADD IT'S 270 THRU 310, DEL IT 150, IT 110 WAS F014487, IT 160 WAS 408702	CTR	22JUL11
EC502062	F	DELETED IT'S 50 THRU 110	SRK	09-23-11
EC502683	G	PICTORIAL UPDATE	BCB	1-13-12
EC503235	H	ITEM 130 WAS 2000770.	HW	03-22-12

Description: DRIVE AXLE SUB-ASSEMBLY

HARSCO RAIL

Material: ----- | Machine Type: MARK IV | Size: D

Weight: 3317.0 lbm | Drawn: skumar | Date Drawn: 03-19-10 | Part Number: 2019160 | Sheet 1 of 2

SOLID EDGE DRAWING | DO NOT SCALE

TRANSMISSION SHIFT CYLINDER INSTALLATION

1. PLACE TRANSMISSION SHIFT SHAFT IN THE NEUTRAL DETENT POSITION. SEE VIEW WITH APPROXIMATE DIMENSION. NEUTRAL DETENT MAY NEED TO BE ADJUSTED IN TO INSURE DETENT IS SEATED AND SHIFT SHAFT HAS MINIMAL MOVEMENT.
2. INSTALL MOUNTING BRACKET ON TO TRANSMISSION, LEAVING BOLTS LOOSE.
3. INSTALL JAM NUT ON TO CYLINDER ROD.
4. APPLY BLUE LOCTITE 242 ON TO 3/8-24 THREADS OF CYLINDER ROD AND THREAD AGAINST SHIFT SHAFT.
5. APPLY BLUE LOCTITE 242 TO 5/8-18 THREADS OF CYLINDER ROD AND TIGHTEN AGAINST SHIFT SHAFT.
6. APPLY BLUE LOCTITE242 TO CYLINDER MOUNTING SCREWS AND MOUNT CYLINDER TO MOUNT BRACKET WITH LOCKWASHER.
7. PUT AIR CYLINDER IN NEUTRAL POSITION BY APPLYING AIR TO PORTS SHOWN ON DRAWING.
8. TIGHTEN MOUNTING BRACKET BOLTS.
9. AFTER SETTING DETENTS, INSTALLING PROX SWITCHES & ADJUSTING CYLINDER, CAP CYLINDER PORTS WITH F014689 CAP NUTS (#4 JIC). RETURN NUTS TO LARGE ASSEMBLY AFTER INSTALLING DRIVE AXLE ON MACHINE.

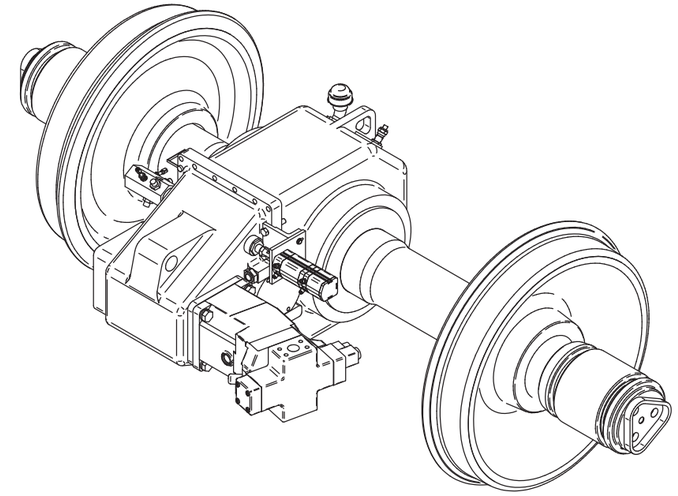

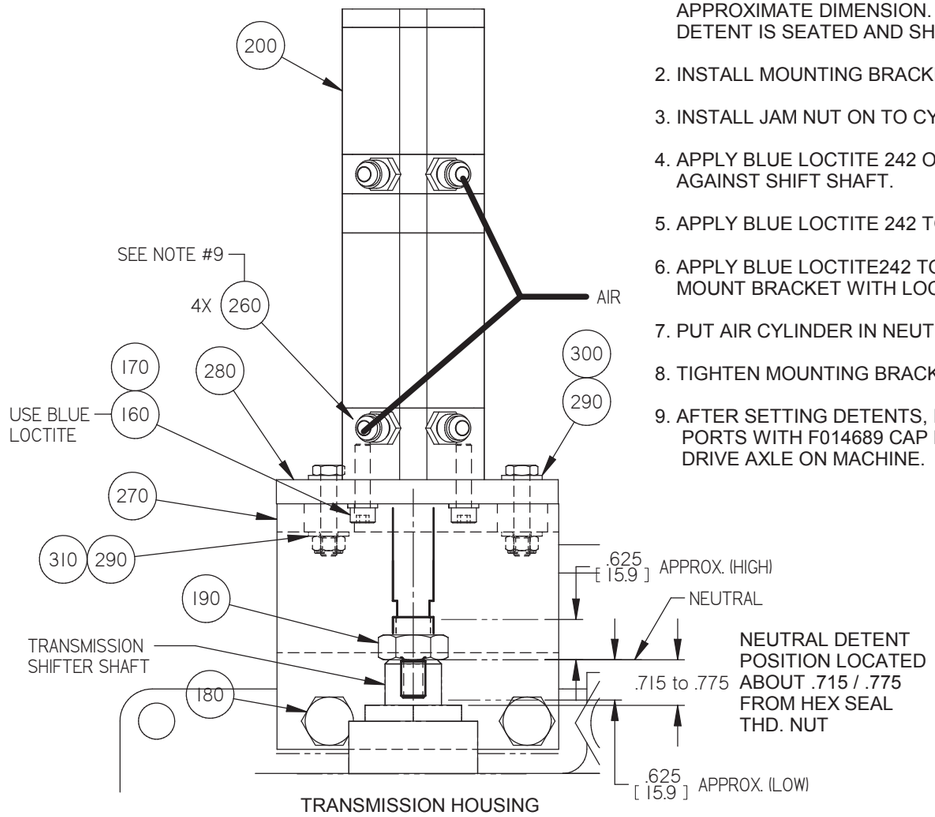

DETAIL OF AIR SHIFT ASSEMBLY

ASSEMBLY NOTES TO ADJUST DETENT(S):

1. PLACE TRANSMISSION IN NEUTRAL GEAR
2. REMOVE ALL 3 DETENTS & PLACE GREASE ON THE DETENT BALLS. NOTE: DURING STARTUP, IF BALLS ARE NOT GREASED, SHIFTING IS DIFFICULT.
3. ADJUST HIGH GEAR DETENT SO THAT DETENT TIP JUST CONTACTS SHIFT SHAFT.
4. TURN IN 3/4 TURN (.068 IN/1.7 MM).
5. TIGHTEN JAM NUT TO 75 FT-LB (102 Nm) MAX. ENSURE THAT DETENT DOES NOT TURN WHEN TIGHTING JAM NUT.
6. REPEAT FOR LOW GEAR DETENT WHILE IN NEUTRAL GEAR.
7. SHIFT TO EITHER HIGH OR LOW GEAR. REPEAT STEPS 2 THRU 5 FOR NEUTRAL DETENT.
8. SHIFT THROUGH THE 3 POSITIONS TWO OR THREE TIMES TO ENSURE SMOOTH SHIFTING.

PROX SWITCH (REF 130) SETTING PROCEDURE

1. PLACE TRANSMISSION IN NEUTRAL
2. REMOVE M8 X 1.0 SCREW & LOCKWASHER AT NEUTRAL PROX SWITCH LOCATION
3. INSTALL REF 130 PROX SWITCH INTO NEUTRAL SWITCH LOCATION UNTIL IT CONTACTS THE INTERNAL SHIFT SHAFT MECHANISM
4. BACK OUT 1 TURN (1../.039 IN)
5. TIGHTEN JAMNUT TO 4 FT. LBS MAX.
6. SHIFT TRANSMISSION TO HIGH AND LOW; REPEAT STEPS 2 THRU 5 WITH EACH POSITION.

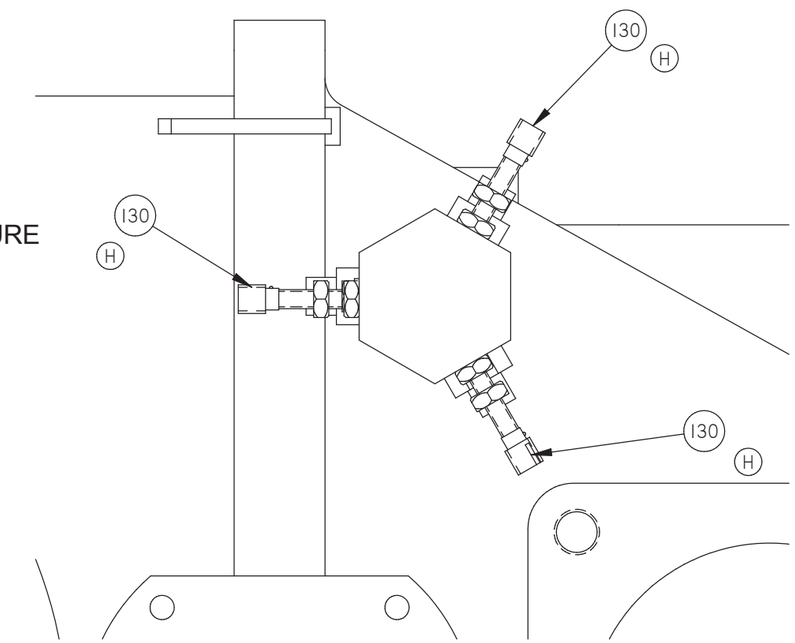

VIEW N-N

REF SHT 1 FOR HIGH, NEUTRAL, LOW SENSOR LOCATION.
NOTE: WHEN INSTALLING ITEM 130 (3) PLCS
CARE TO BE TAKEN NOT TO TWIST CABLE.
REMOVE ALL TWIST AFTER SETTING SENSORS.
TORQUE ON JAM NUTS TO BE 4 FT. LBS. MAX.

Inch
[mm]

CONFIDENTIAL
© COPYRIGHT 2011 HARSCO. THIS DRAWING OR DOCUMENT IS THE PROPERTY OF HARSCO AND EMBODIES CONFIDENTIAL INFORMATION, TRADE SECRET INFORMATION, AND/OR KNOW-HOW THAT IS THE PROPERTY OF HARSCO. BY ACCEPTING THIS DRAWING OR DOCUMENT, THE RECIPIENT AGREES (1) NOT TO PROVIDE, OR OTHERWISE MAKE AVAILABLE, THE DRAWING OR DOCUMENT, OR ANY INFORMATION OR KNOW-HOW EMBODIED THEREIN, TO ANY THIRD PARTY AND (2) NOT TO REPRODUCE OR USE THE DRAWING OR DOCUMENT TO MANUFACTURE ANY APPARATUS OR DEVICE, WITHOUT THE PRIOR WRITTEN AUTHORIZATION OF HARSCO.

NOMINAL SIZE RANGE		INCH PLUS OR MINUS	
OVER	TO	2 PLACE DECIMAL	3 PLACE DECIMAL
0	6	.03	.005
6	24	.04	.008
24	-	.06	.010

NOMINAL SIZE RANGE		METRIC PLUS OR MINUS	
OVER	TO	1 PLACE DECIMAL	2 PLACE DECIMAL
0	150	.8	.13
150	600	1.0	.20
600	-	1.5	.25

UNLESS OTHERWISE SPECIFIED ALL MACHINED SURFACES WILL HAVE:
A SURFACE FINISH OF 125 MICROINCHES
ANGULAR TOLERANCE OF +/- 50'
CONCENTRICITY WITHIN .010

THIRD ANGLE PROJECTION

UNLESS OTHERWISE SPECIFIED, ALL WELDS SHOULD ADHERE TO THE MOST CURRENT A.W.S WELDING STANDARDS

CHANGE	R/L	REVISION	DR	DATE
EC500075	D	SEE EC	DBB	05-11-11
EC501493	E	ADD IT'S 270 THRU 310, DEL IT 150, IT 110 WAS F014487, IT 160 WAS 408702	CTR	22JUL11
EC502062	F	DELETED IT'S 50 THRU 110	SRK	09-23-11
EC502683	G	PICTORIAL UPDATE	BCB	1-13-12
EC503235	H	ITEM 130 WAS 2000770.	HW	03-22-12

Description: DRIVE AXLE SUB-ASSEMBLY
Material: ----
Weight: 3317.0 lbm
Drawn: skumar
Date Drawn: 03-19-10
Machine Type: MARK IV
Part Number: 2019160
Size: D
Sheet: 2 of 2
SOLID EDGE DRAWING
DO NOT SCALE
HARSCO RAIL

ITEM	PART NO	QTY	DESCRIPTION
10	411428-1	2	WHEEL- PROFILE MACHINED
20	2005757	1	AXLE WITH GEAR BOX
30	450091-2	2	NEW BEARING (ASSEMBLY)

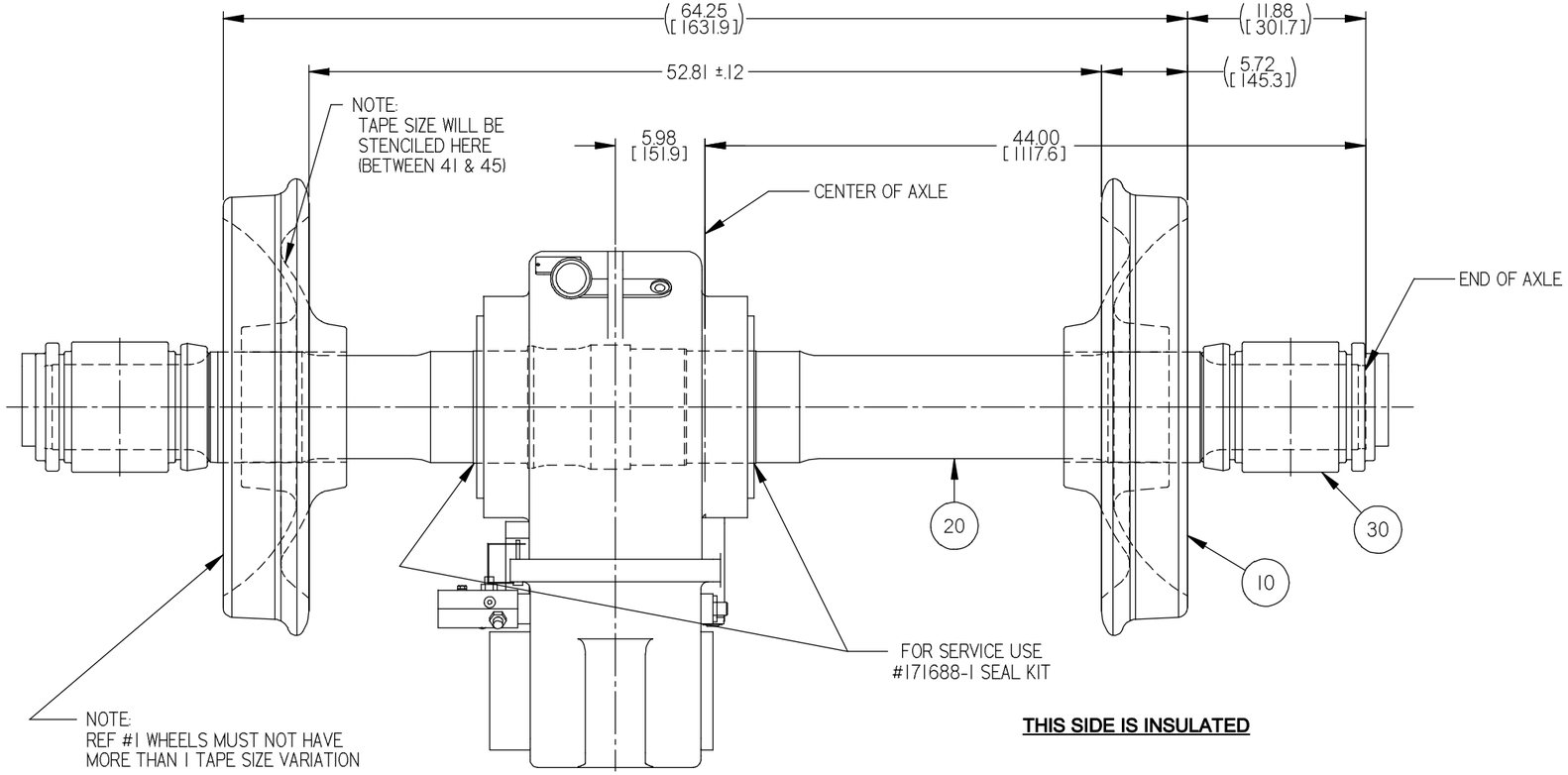

THIS SIDE IS INSULATED

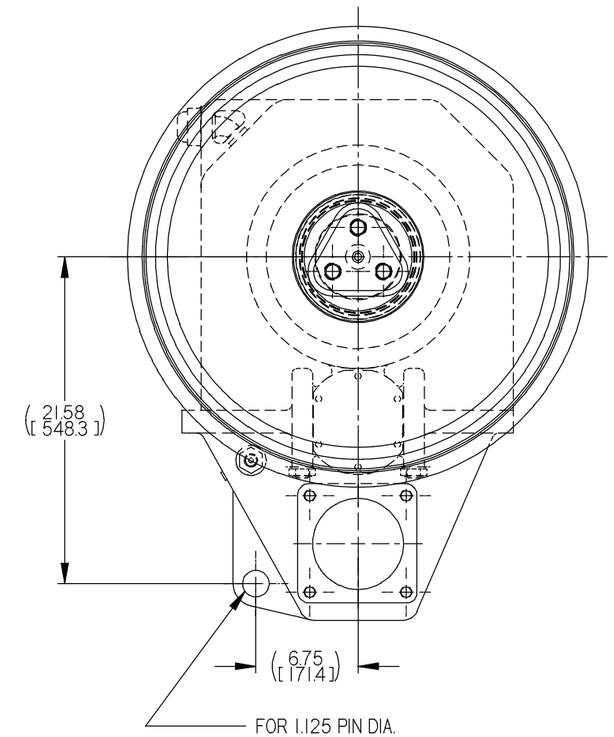

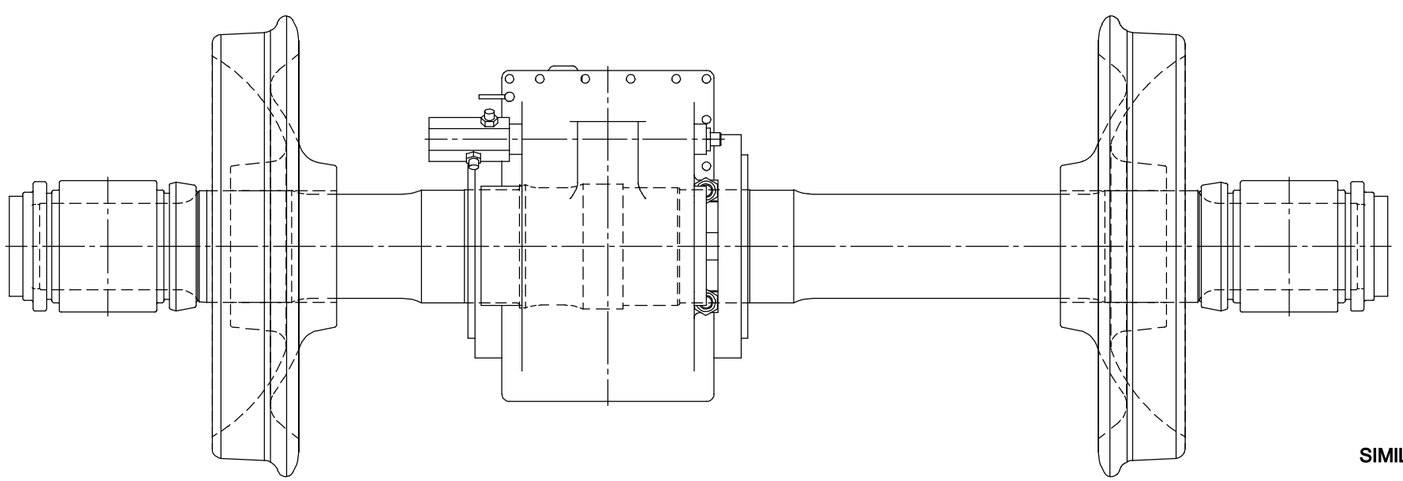

SIMILAR TO 2005770

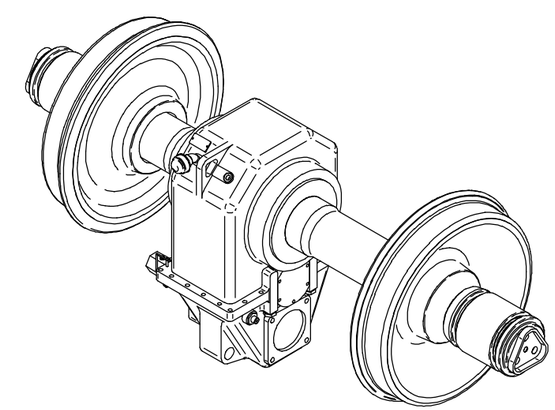

Inch
[mm]

CONFIDENTIAL
© COPYRIGHT 2011 HARSCO. THIS DRAWING OR DOCUMENT IS THE PROPERTY OF HARSCO AND EMBODIES CONFIDENTIAL INFORMATION, TRADE SECRET INFORMATION, AND/OR KNOW-HOW THAT IS THE PROPERTY OF HARSCO. BY ACCEPTING THIS DRAWING OR DOCUMENT, THE RECIPIENT AGREES (1) NOT TO PROVIDE, OR OTHERWISE MAKE AVAILABLE, THE DRAWING OR DOCUMENT, OR ANY INFORMATION OR KNOW-HOW EMBODIED THEREIN, TO ANY THIRD PARTY AND (2) NOT TO REPRODUCE OR USE THE DRAWING OR DOCUMENT TO MANUFACTURE ANY APPARATUS OR DEVICE, WITHOUT THE PRIOR WRITTEN AUTHORIZATION OF HARSCO.

NOMINAL SIZE RANGE		INCH PLUS OR MINUS	
OVER	TO	2 PLACE DECIMAL	3 PLACE DECIMAL
0	6	.03	.005
6	24	.04	.008
24	-	.06	.010

NOMINAL SIZE RANGE		METRIC PLUS OR MINUS	
OVER	TO	1 PLACE DECIMAL	2 PLACE DECIMAL
0	150	.8	.13
150	600	1.0	.20
600	-	1.5	.25

UNLESS OTHERWISE SPECIFIED ALL MACHINED SURFACES WILL HAVE:
A SURFACE FINISH OF 125 MICROINCHES
ANGULAR TOLERANCE OF +- .50°
CONCENTRICITY WITHIN .010

THIRD ANGLE PROJECTION

UNLESS OTHERWISE SPECIFIED, ALL WELDS SHOULD ADHERE TO THE MOST CURRENT A.W.S WELDING STANDARDS

CHANGE	R/L	REVISION	DR	DATE
300347	A	RELEASE	CTR	19MAR10
EC500706	B	FORMAT UPDATED - SE FILES REPAIRED DUE TO T.C. DATA LOAD.	LRHW	16MAR11
EC502062	C	DELETED ITEM # 40 WAS 250703-1	SRK	09-29-11

Description: DRIVE AXLE ASSEMBLY

HARSCO RAIL

Material: --, --

Machine Type: MARK IV

Weight: 3055.2 lbm

Drawn: crosso

Date Drawn: 19MAR10

Part Number: 2019159

Size: D

Sheet: 1 of 1

SOLID EDGE DRAWING

DO NOT SCALE

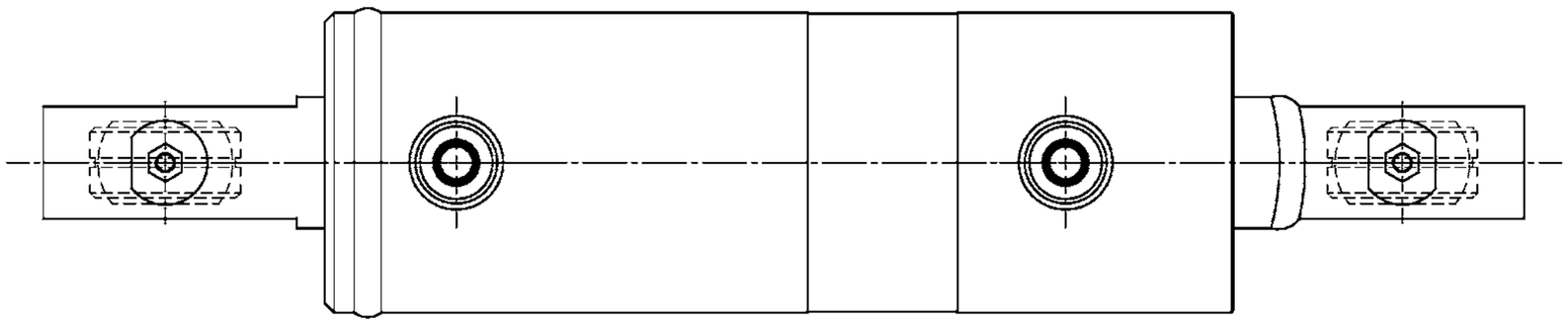

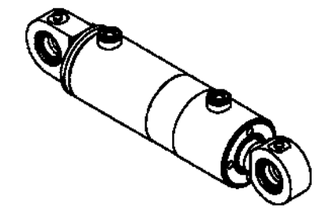

ROD 1.75 DIA.
BORE 3.50 DIA.
STROKE 6.00"

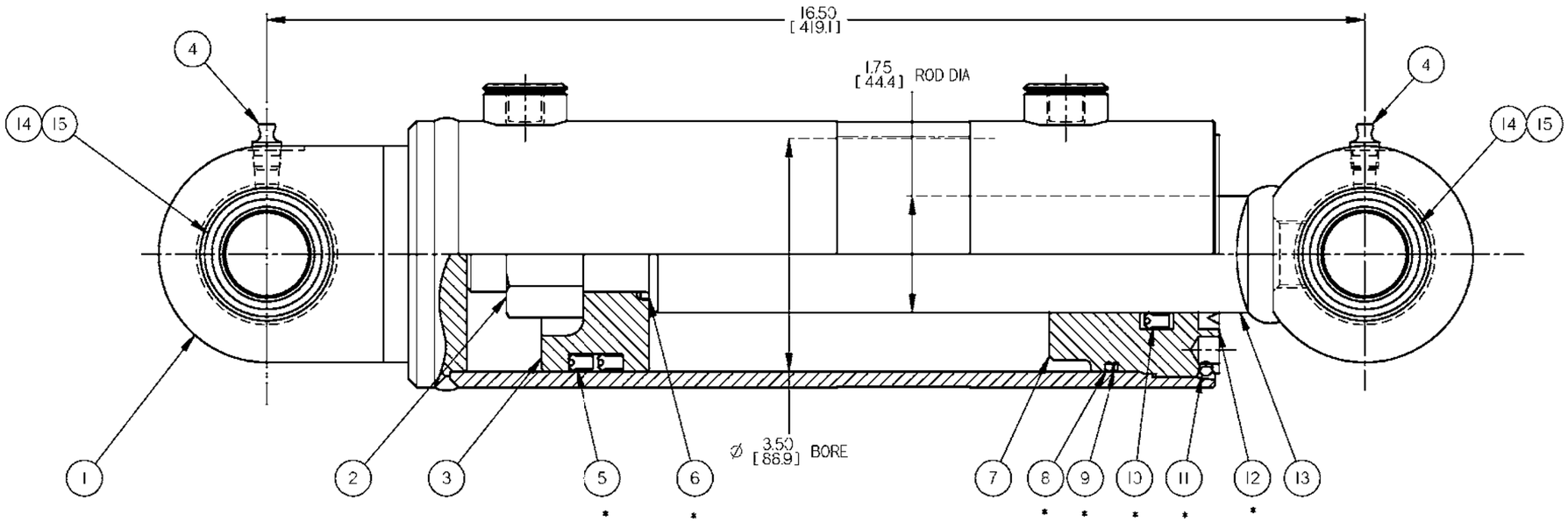

* - ITEMS INCLUDED IN SERVICE KIT #240370-1

ALWAYS FURNISH THE STAMPED PART NUMBER FROM THE OUTSIDE OF THE CYLINDER WHEN ORDERING SERVICE PARTS.

Inch
[mm]

SOLID EDGE DRAWING

CONFIDENTIAL

CHANGE	REV	REVISION	DATE
CCE		RECRAWN \ SOLID EDGE	19MAR08

DESCRIPTION	HYDRAULIC CYLINDER
DRAWING NUMBER	340311-1, A
WEIGHT	36.5 lbm
DRAWN	CCE 19MAR08

HTT
Harsco Track Technologies
Harsco
Lexington, KY

340311-1, A

Assembly No.	340311-1
Revision	A

Ref	PartNumber	Description	Qty	Len	UOM	Cut Len
1	222662-1	BARREL WELDMENT	1		pc	
2	155336-7	LOCKNUT- NYLOCK, 1.12-12	1		pc	
3	218542-1	PISTON	1		pc	
4	150009-1	GREASE FITTING- STR, .12	2		pc	
5	250632-1	PISTON SEAL	2		pc	
6	150395-7	O-RING, .139 THICK X 1.109 ID	1		pc	
7	311962-1	HEAD - CYL.	1		pc	
8	150395-27	O-RING, .139 THICK X 3.234 ID	1		pc	
9	156342-1	BACKING RING	1		pc	
10	156343-1	ROD SEAL	1		pc	
11	150012-17	O-RING, .210 THICK X 3.225 ID	1		pc	
12	156344-1	ROD WIPER	1		pc	
13	222661-1	CYLINDER ROD	1		pc	
14	150021-7	BEARING - SPHERICAL 1.250 ID X 2.00 OD	2		pc	
15	150323-42	SNAP RING- INT, .062 THICK X 2.000 DIA	4		pc	

Item Number	Document Number	Title	Quantity
10	5004769	DRIVE & BRAKE ASSEMBLY	1
20	330840-1	HYDRAULIC CYLINDER	2
30	217959-2	TEARDROP PIN- 1.25 DIA	4
40	H3948Y05	DISC LOCK WASHER	6
50	F001539	DC-HEX HD CAP SCR 1/2-13X1 1/4	6
60	2011912	PIN WELDMENT	2
70	254740-1	BUSHING 2.00 I.D 2.375 O.D.	4
100	150009-1	GREASE FITTING- STR, .12	1

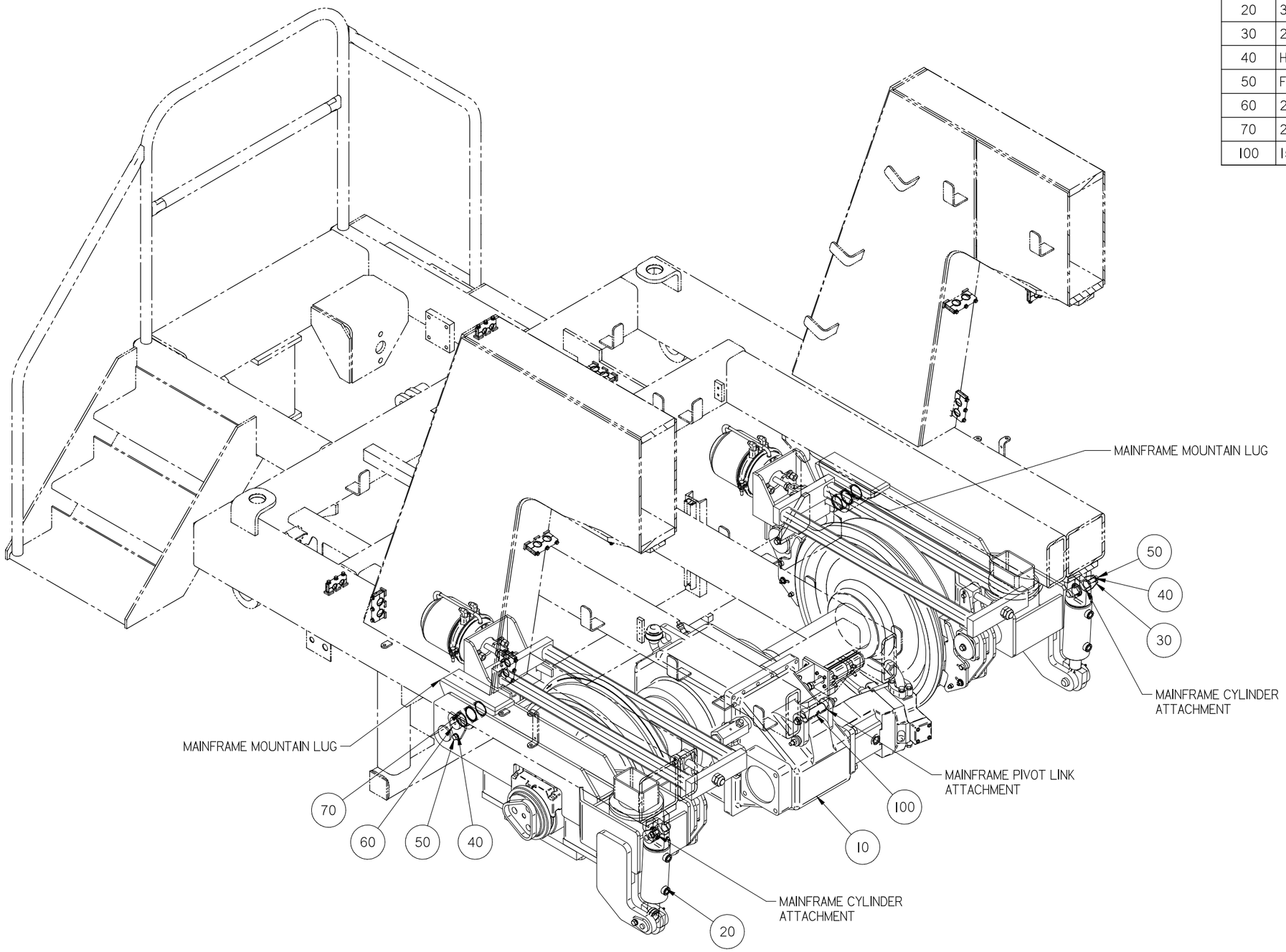

NOTE:

SEE "DRIVE AND BRAKE ASSEMBLY" FOR BRAKE ADJUSTMENT PROCEDURE.

Inch [mm]

CONFIDENTIAL
© COPYRIGHT 2011 HARSCO. THIS DRAWING OR DOCUMENT IS THE PROPERTY OF HARSCO AND EMBODIES CONFIDENTIAL INFORMATION, TRADE SECRET INFORMATION, AND/OR KNOW-HOW THAT IS THE PROPERTY OF HARSCO. BY ACCEPTING THIS DRAWING OR DOCUMENT, THE RECIPIENT AGREES (1) NOT TO PROVIDE, OR OTHERWISE MAKE AVAILABLE, THE DRAWING OR DOCUMENT, OR ANY INFORMATION OR KNOW-HOW EMBODIED THEREIN, TO ANY THIRD PARTY AND (2) NOT TO REPRODUCE OR USE THE DRAWING OR DOCUMENT TO MANUFACTURE ANY APPARATUS OR DEVICE, WITHOUT THE PRIOR WRITTEN AUTHORIZATION OF HARSCO.

NOMINAL SIZE RANGE		INCH PLUS OR MINUS		NOMINAL SIZE RANGE		METRIC PLUS OR MINUS	
OVER	TO	2 PLACE DECIMAL	3 PLACE DECIMAL	OVER	TO	1 PLACE DECIMAL	2 PLACE DECIMAL
0	6	.03	.005	0	150	.8	.13
6	24	.04	.008	150	600	1.0	.20
24	-	.06	.010	600	-	1.5	.25

UNLESS OTHERWISE SPECIFIED ALL MACHINED SURFACES WILL HAVE:
A SURFACE FINISH OF 125 MICROINCHES
ANGULAR TOLERANCE OF ±.5°
CONCENTRICITY WITHIN .010

THIRD ANGLE PROJECTION

UNLESS OTHERWISE SPECIFIED, ALL WELDS SHOULD ADHERE TO THE MOST CURRENT A.W.S WELDING STANDARDS

CHANGE	R/L	REVISION	DR	DATE
EC500706	A	NEW RELEASE	LR/HW	03-21-11
EC502062	B	DELETED ITEMS 80 & 90 WERE F019406, F019756; ADDED ITEM# 100	SRK	09-27-11

Description: REAR AXLE INSTALLATION

HARSCO RAIL

Material: -; -

Machine Type: MARK IV

Size: D

Weight: 4737.9 lbm

Drawn: LRoldan

Date Drawn: 3/17/2011

Part Number: 5006979

Sheet: 1 of 2

SOLID EDGE DRAWING

DO NOT SCALE

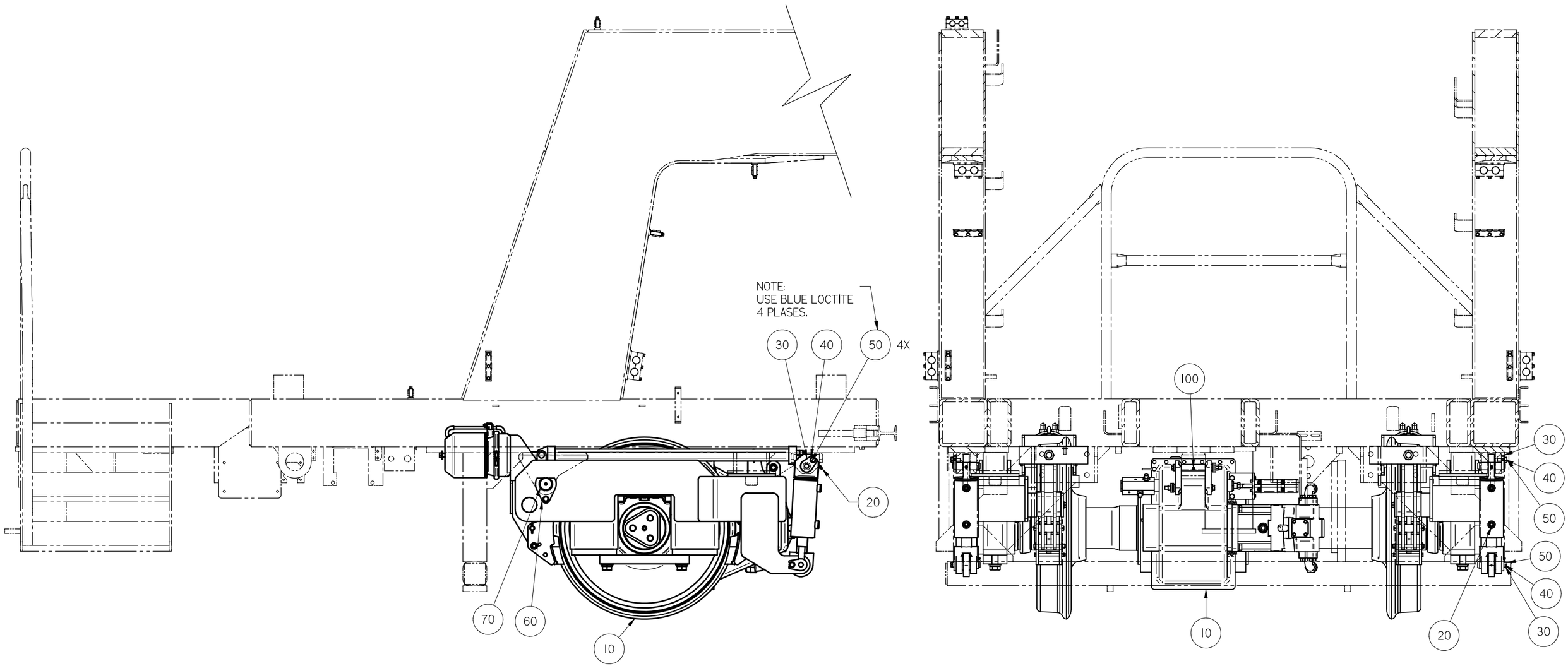

Inch
[mm]

CONFIDENTIAL
© COPYRIGHT 2011 HARSCO. THIS DRAWING OR DOCUMENT IS THE PROPERTY OF HARSCO AND EMBODIES CONFIDENTIAL INFORMATION, TRADE SECRET INFORMATION, AND/OR KNOW-HOW THAT IS THE PROPERTY OF HARSCO. BY ACCEPTING THIS DRAWING OR DOCUMENT, THE RECIPIENT AGREES (1) NOT TO PROVIDE, OR OTHERWISE MAKE AVAILABLE, THE DRAWING OR DOCUMENT, OR ANY INFORMATION OR KNOW-HOW EMBODIED THEREIN, TO ANY THIRD PARTY AND (2) NOT TO REPRODUCE OR USE THE DRAWING OR DOCUMENT TO MANUFACTURE ANY APPARATUS OR DEVICE, WITHOUT THE PRIOR WRITTEN AUTHORIZATION OF HARSCO.

NOMINAL SIZE RANGE		INCH PLUS OR MINUS	
OVER	TO	2 PLACE DECIMAL	3 PLACE DECIMAL
0	6	.03	.005
6	24	.04	.008
24	-	.06	.010

NOMINAL SIZE RANGE		METRIC PLUS OR MINUS	
OVER	TO	1 PLACE DECIMAL	2 PLACE DECIMAL
0	150	.8	.13
150	600	1.0	.20
600	-	1.5	.25

UNLESS OTHERWISE SPECIFIED ALL MACHINED SURFACES WILL HAVE:
A SURFACE FINISH OF 125 MICROINCHES
ANGULAR TOLERANCE OF ±.50°
CONCENTRICITY WITHIN .010

THIRD ANGLE PROJECTION

UNLESS OTHERWISE SPECIFIED, ALL WELDS SHOULD ADHERE TO THE MOST CURRENT A.W.S WELDING STANDARDS

CHANGE	R/L	REVISION	DR	DATE
EC500706	A	NEW RELEASE	LR/HW	03-21-11
EC502062	B	DELETED ITEMS 80 & 90 WERE F019406, F019756; ADDED ITEM# 100	SRK	09-27-11

Description: REAR AXLE INSTALLATION

HARSCO RAIL

Material: -; -

Machine Type: MARK IV

Size: D

Weight: 4737.9 lbm

Drawn: LRoldan

Date Drawn: 3/17/2011

Part Number: 5006979

Sheet: 2 of 2

SOLID EDGE DRAWING

DO NOT SCALE

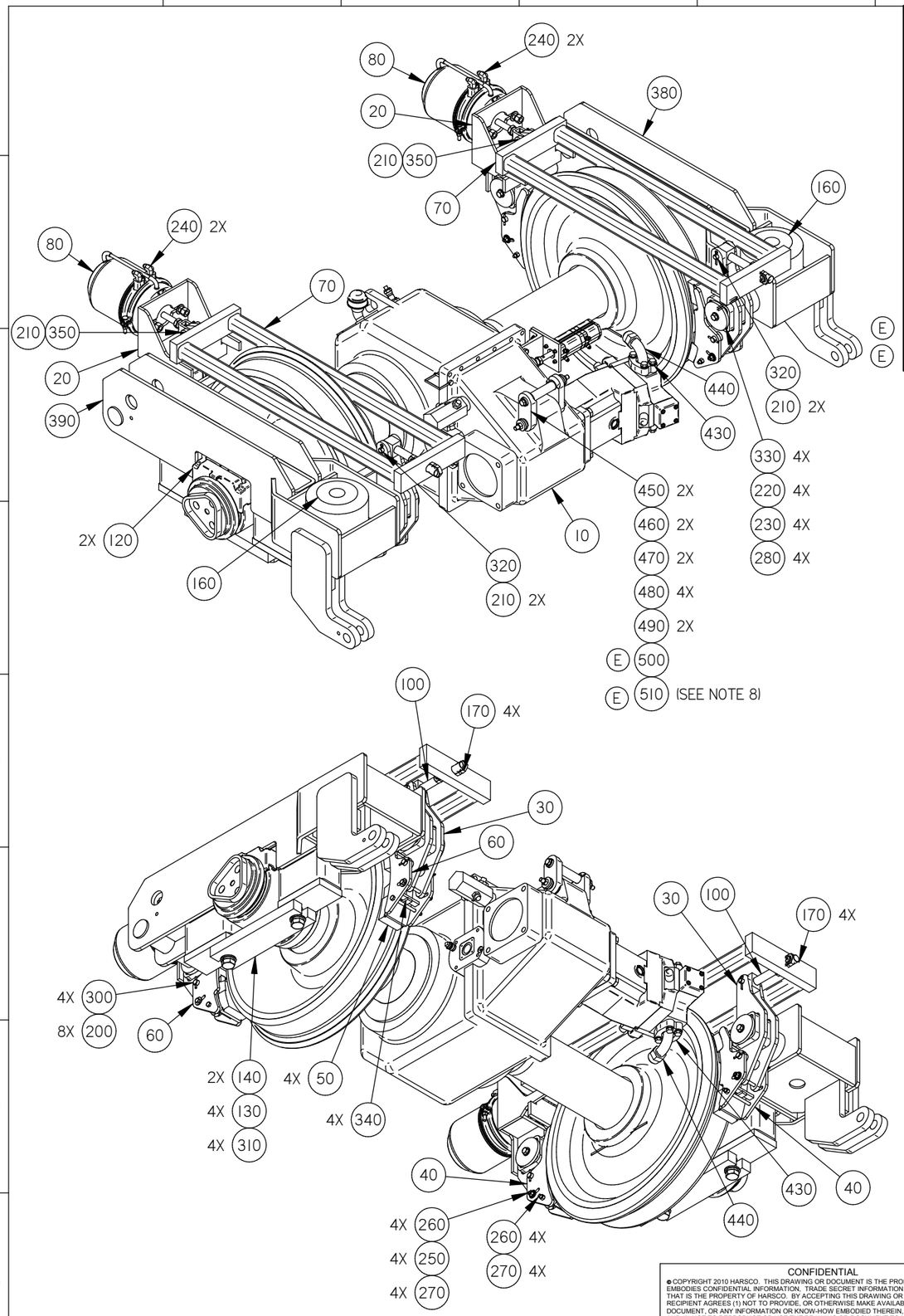

ITEM	PART NO	QTY	DESCRIPTION
350	222324-1	2	PIN-RESTRICT BAR
380	5005044	1	MTG BRKT LH DR AXLE
390	5005043	1	BRACKET, RH DR AXLE MTG
430	F040260	2	SPLIT FLANGE KIT
440	0-3304194-0-02	2	SPLIT FLG/JIC 90 DEG
450	5011406	2	LINK
460	250010-270	2	SCREW-HHC, .50-20 X 8.00 LG
470	222221-1	2	BUSHING-STEEL .53 ID X 1.124 OD X 6.50 LG
480	MT223-B	4	WASHER
490	153140-820	2	LOCKNUT- GRADE 5, .50-20
500	5016946	1	CENTER BONDED JOINT
510	5016687	1	LUBRICANT, RUBBER

ITEM	PART NO	QTY	DESCRIPTION
10	2019160	1	DRIVE AXLE SUB-ASSEMBLY
20	330871-1	2	BRAKE ARM WELD
30	330872-1	2	BRAKE ARM ASSY
40	314075-1	2	SHOE HOLDER WELD.LH SEE TEXT
50	218045-1	4	BRAKE SHOE
60	314076-1	2	SHOE HOLDER WELD.RH
70	314011-1	2	BRAKE BEAM WELD
80	350886-1	2	AIR BRAKE CHAMBER
100	223021-1	2	ADJ.SCREW-BRAKE
110	5010609	2	RESTRICT. BAR
120	411214-1	2	BEAR.ADAPTOR-MACHND
130	183743	4	HEX HD CS 1-8X3 GR8 ZP
140	219067-1	2	TIE PLATE
160	250741-1	2	RUBBER SPRING
170	F001506	8	HEX JAM NUT 1"-8 GR2 ZP
180	F012452	4	.625 ELASTIC STOP NUT
200	F012413	8	SPRING PIN 3/16 X 1 3/4
210	F001324	6	DC-3/16 X1 1/2 COTTER PIN *
220	F001539	4	DC-HEX HD CAP SCR 1/2-13X1 1/4
230	F002965	12	DC-SAE WASHER 1/2 ZP
240	F020522	4	DC-ELB90 6X6NPT
250	F019282	4	SPRING WASHER
260	F001530	8	DC-HEX HD CAP SCR 3/8-16X5 GR5
270	F015922	8	DC-3/8-16 ELASTIC STOP NUT
280	222947-1	4	KEY
290	183744	4	SAE FLAT WASHER 1.00
300	112496-1	4	PIN
310	F001657	4	SAE RGLR LOCK WASHER 1" ZP
320	217282-1	2	PIN
330	222938-1	4	RETAINER-BRAKE ARM
340	112482-1	4	BRAKE SHOE RETAINER

BRAKE INSTALLATION:

1. INSTALL BRAKE ARMS (REF 20 & 30) ON BRAKE PIVOT SHAFTS WITH KEYS (REF 280) AND RETAINER PLATES (REF 330).
2. MOUNT BRAKE CHAMBER (REF 80) ON BRAKE ARM (REF 20. DIMENSION BETWEEN FRONT SURFACE OF BRAKE CHAMBER AND CENTER OF HOLE IN CLEVIS SHOULD BE 5.25 WITH ROD RETRACTED. TIGHTEN BRAKE RELEASE BOLT TO 40-45 FT-LBS.
3. ASSEMBLE BRAKE BEAM (REF 70) & RESTRICTOR BAR (REF 110) TO BRAKE CHAMBER WITH PIN (REF 350).
4. ASSEMBLE ADJUSTING SCREW (REF 100) TO OPPOSITE END OF BRAKE BEAM USING (2) JAM NUTS (REF 170) ON EITHER SIDE OF BEAM. ATTACH ADJUSTING SCREW TO BRAKE ARM (REF 30) WITH PIN (REF 320).
5. USE AIR PRESSURE TO RETRACT BRAKE CHAMBER ROD AND INSTALL BRAKE SHOE HOLDERS (REF 40 & 60) AND BRAKE SHOES (REF 50). FLANGE SIDE OF BRAKE SHOES HOLDERS MUST BE TOWARDS OUTSIDE OF MACHINE.
6. ADJUST NUTS ON ADJUSTING SCREW (REF 100) TO OBTAIN A GAP OF .06 BETWEEN THE WHEEL AND BRAKE SHOE AND TIGHTEN.
7. DISCONNECT AIR PRESSURE FROM BRAKE CHAMBER.
8. (E) BEFORE INSTALLING ITEM 500 INTO DRIVE AXLE USE RUBBER LUBRICANT.

Inch
[mm]

CONFIDENTIAL
© COPYRIGHT 2010 HARSCO. THIS DRAWING OR DOCUMENT IS THE PROPERTY OF HARSCO AND EMBODIES CONFIDENTIAL INFORMATION, TRADE SECRET INFORMATION, AND/OR KNOW-HOW THAT IS THE PROPERTY OF HARSCO. BY ACCEPTING THIS DRAWING OR DOCUMENT, THE RECIPIENT AGREES (1) NOT TO PROVIDE, OR OTHERWISE MAKE AVAILABLE, THE DRAWING OR DOCUMENT, OR ANY INFORMATION OR KNOW-HOW EMBODIED THEREIN, TO ANY THIRD PARTY AND (2) NOT TO REPRODUCE OR USE THE DRAWING OR DOCUMENT TO MANUFACTURE ANY APPARATUS OR DEVICE, WITHOUT THE PRIOR WRITTEN AUTHORIZATION OF HARSCO.

NOMINAL SIZE RANGE		INCH PLUS OR MINUS	
OVER	TO	2 PLACE DECIMAL	3 PLACE DECIMAL
0	6	.03	.005
6	24	.04	.008
24	-	.06	.010

NOMINAL SIZE RANGE		METRIC PLUS OR MINUS	
OVER	TO	1 PLACE DECIMAL	2 PLACE DECIMAL
0	150	.8	.13
150	600	1.0	.20
600	-	1.5	.25

UNLESS OTHERWISE SPECIFIED ALL MACHINED SURFACES WILL HAVE;
A SURFACE FINISH OF 125 MICROINCHES
ANGULAR TOLERANCE OF ± 30'
CONCENTRICITY WITHIN .010

THIRD ANGLE PROJECTION

UNLESS OTHERWISE SPECIFIED, ALL WELDS SHOULD ADHERE TO THE MOST CURRENT A.W.S WELDING STANDARDS

CHANGE	R/L	REVISION	DR	DATE
EC500374	A	NEW RELEASE	CJW	01-17-11
EC500706	B	REMOVED ITEMS 90(330840-1), 190(H3948Y05), 360(2011912), 370(219959-2), 400(254740-1), ITEM 220 WAS QTY 10. - SEE P/N 5006979 FOR REAR DRIVE INSTALLATION.	LR/HW	03-21-11
EC501805	C	ITEM 110 WAS 222323-1 AND 230 QTY WAS 4	HW	08-19-11
EC502062	D	ADDED ITEMS 450 THRU 500	SRK	09-27-11
EC503235	E	ITEM 500 WAS 250703-1; ADDED ITEM 510 AND NOTE 8	HW	03-16-12

Description: DRIVE & BRAKE ASSEMBLY

HARSCO RAIL

Material: SEE PARTS LIST ABOVE
Weight: 4927.1 lbm
SOLID EDGE DRAWING
Machine Type: MARK IV
Drawn: skumar
Date Drawn: 3/16/2012
DO NOT SCALE
Part Number: 5004769
Size: D
Sheet: 1 of 2

Plotted by hwiggins on 3/22/2012 5004769.dft

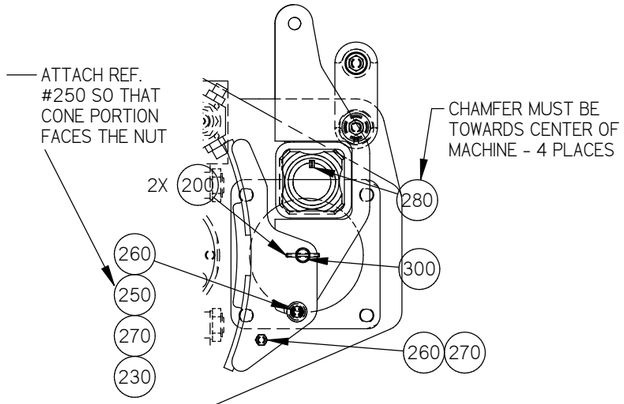

BRAKE ARM ASSEMBLY
TYPICAL 4 PLACES

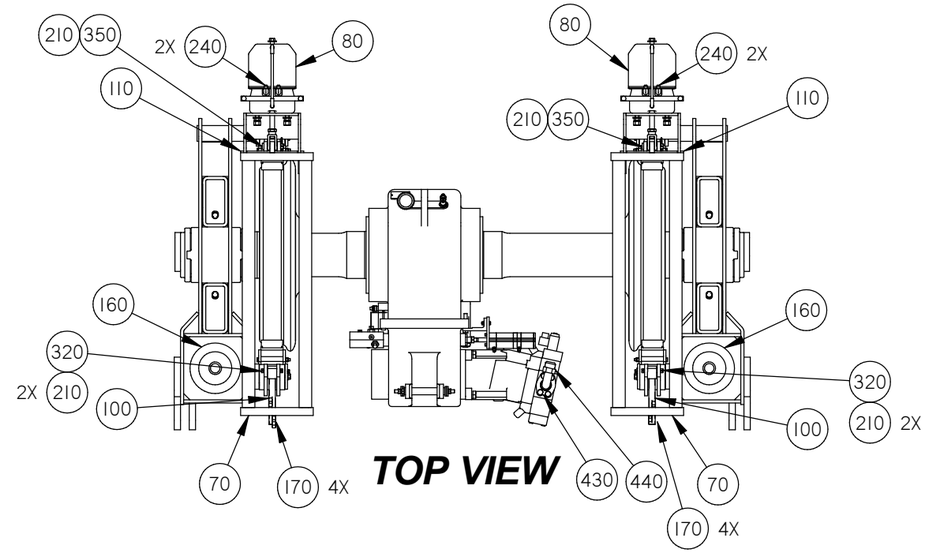

TOP VIEW

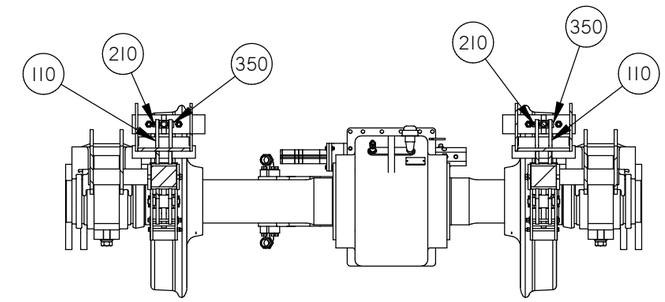

SECTION B-B

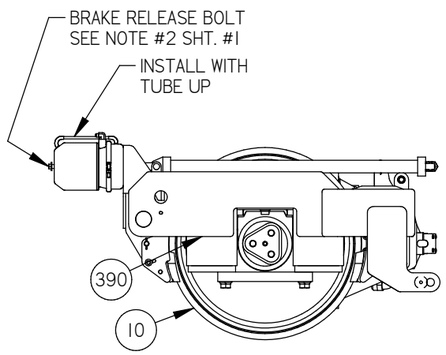

LEFT SIDE VIEW

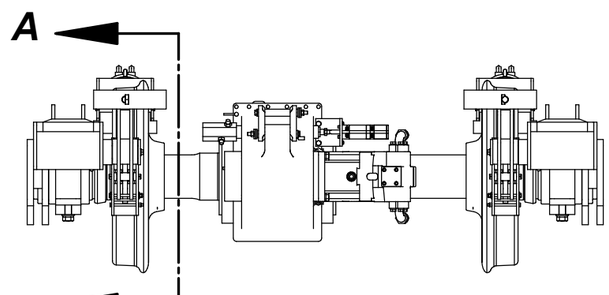

FRONT VIEW

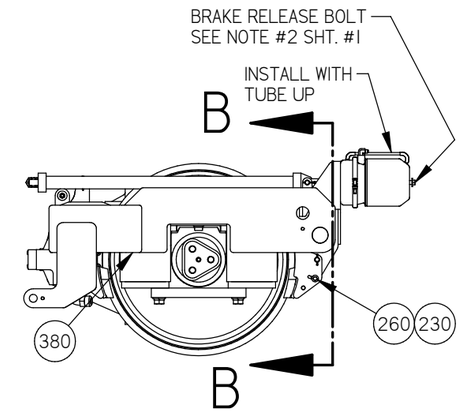

RIGHT SIDE VIEW

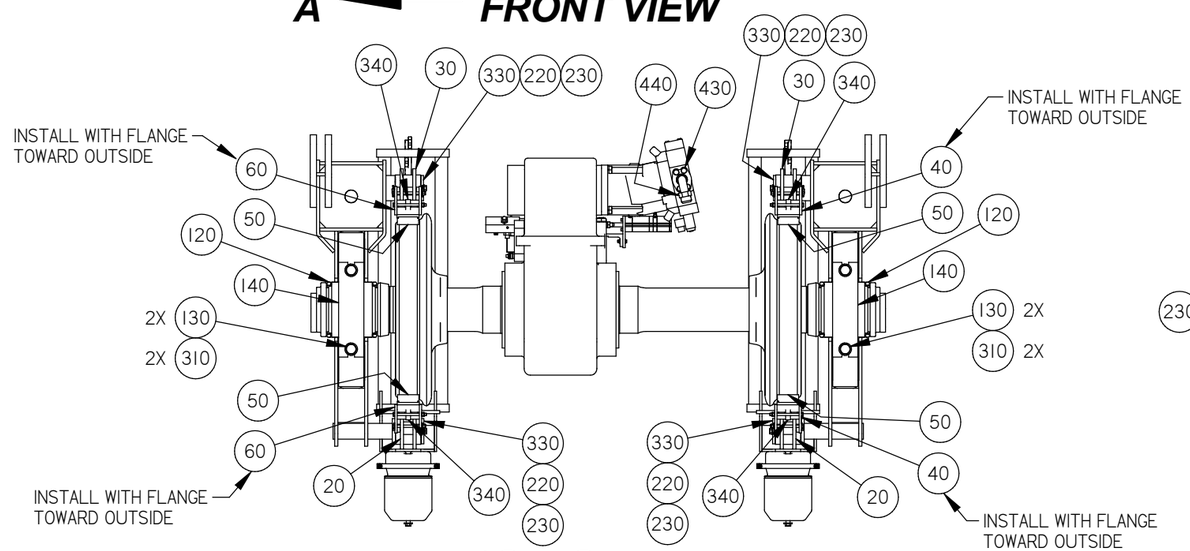

BOTTOM VIEW

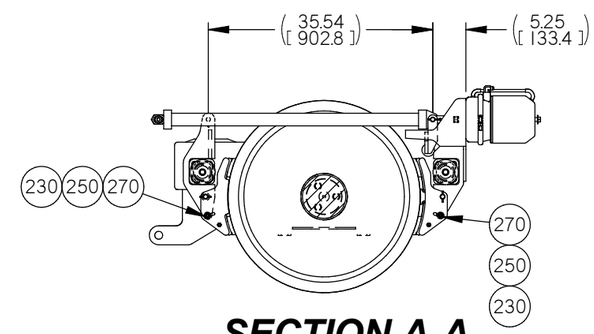

SECTION A-A

SIMILAR TO 2013623

Inch
[mm]

CONFIDENTIAL
© COPYRIGHT 2010 HARSCO. THIS DRAWING OR DOCUMENT IS THE PROPERTY OF HARSCO AND EMBODIES CONFIDENTIAL INFORMATION, TRADE SECRET INFORMATION, AND/OR KNOW-HOW THAT IS THE PROPERTY OF HARSCO. BY ACCEPTING THIS DRAWING OR DOCUMENT, THE RECIPIENT AGREES (1) NOT TO PROVIDE, OR OTHERWISE MAKE AVAILABLE, THE DRAWING OR DOCUMENT, OR ANY INFORMATION OR KNOW-HOW EMBODIED THEREIN, TO ANY THIRD PARTY AND (2) NOT TO REPRODUCE OR USE THE DRAWING OR DOCUMENT TO MANUFACTURE ANY APPARATUS OR DEVICE, WITHOUT THE PRIOR WRITTEN AUTHORIZATION OF HARSCO.

INCH			
NOMINAL SIZE RANGE		PLUS OR MINUS	
OVER	TO	2 PLACE DECIMAL	3 PLACE DECIMAL
0	6	.03	.005
6	24	.04	.008
24	-	.06	.010

METRIC			
NOMINAL SIZE RANGE		PLUS OR MINUS	
OVER	TO	1 PLACE DECIMAL	2 PLACE DECIMAL
0	150	.8	.13
150	600	1.0	.20
600	-	1.5	.25

UNLESS OTHERWISE SPECIFIED ALL MACHINED SURFACES WILL HAVE:
A SURFACE FINISH OF 125 MICROINCHES
ANGULAR TOLERANCE OF +- 60'
CONCENTRICITY WITHIN .010

THIRD ANGLE PROJECTION

UNLESS OTHERWISE SPECIFIED, ALL WELDS SHOULD ADHERE TO THE MOST CURRENT A.W.S WELDING STANDARDS

CHANGE	R/L	REVISION	DR	DATE
EC500374	A	NEW RELEASE	CJW	01-17-11
EC500706	B	REMOVED ITEMS 90(330840-1), 190(H3948Y05), 360(201191 2), 370(219959-2), 400(2547740-1), ITEM 220 WAS QTY 10. - SEE P/N 5006979 FOR REAR DRIVE INSTALLATION.	LR/HW	03-21-11
EC501805	C	ITEM 110 WAS 222323-1 AND 230 QTY WAS 4	HW	08-19-11
EC502062	D	ADDED ITEMS 450 THRU 500	SRK	09-27-11
EC503235	E	ITEM 500 WAS 250703-1; ADDED ITEM 510 AND NOTE 8	HW	03-16-12

Description: DRIVE & BRAKE ASSEMBLY

HARSCO RAIL

Material: SEE PARTS LIST ABOVE | Machine Type: MARK IV | Size: D

Weight: 4927.1 lbm | Drawn: skumar | Date Drawn: 3/16/2012 | Part Number: 5004769 | Sheet: 2 of 2

SOLID EDGE DRAWING | DO NOT SCALE

Plotted by hwiggins on 3/22/2012 5004769.dft

ITEM	PART NO	QTY	DESCRIPTION
10	2019159	1	DRIVE AXLE ASSEMBLY
20	220782-1	1	ADAPTER, SPECIAL
30	F008551	1	3/8 PIPE PLUG
130	3400890	3	SWITCH, PROXIMITY, 8MM
160	250630-48	4	SCREW-SOC HD CAP, M6 X 1.0 F X 25MM LG
170	4022050	4	WASHER-LOCK, M6
180	F018860	2	1/2-13X2 3/4 HH CS GR 8-ZP
190	F014212	1	DC-HEX JAM NUT 5/8-18 GR2 ZP *
200	2013625	1	AIR CYLINDER - DOUBLE
210	2006509	1	SPEED SENSOR
220	4029264	1	MOTOR, VAR. DISP.
240	F001354	4	DC-SAE RGLR LOCK WASHER 3/4 ZP
250	F007985	4	HHCS 3/4-10 X 2 GR5 ZP
260	F013193	4	ADAPTER 1/8 MP-1/4 JIC
270	5009448	1	ANGLE, SHIFT BRKT
280	5009444	1	BACK PLATE, SHIFT BRKT
290	150973-2	4	1/4" Type A Plain Washer
300	250010-6	2	SCREW HHC 1/4-20 X 1 1/4
310	153140-420	2	1/4-20 NYLON INS NUT

SPEED SENSOR (REF. #210) INSTALLATION:

THE AIR GAP BETWEEN THE GEAR AND THE PICKUP MUST BE SET FOR .048 TO .062. THIS CAN BE SET BY TURNING IN THE PICKUP UNTIL IT TOUCHES THE GEAR O.D. AND THEN SCREW OUT THE PICKUP 3/4 TO 1 TURN TO OBTAIN .048 TO .062

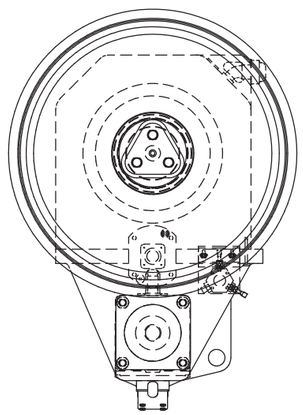

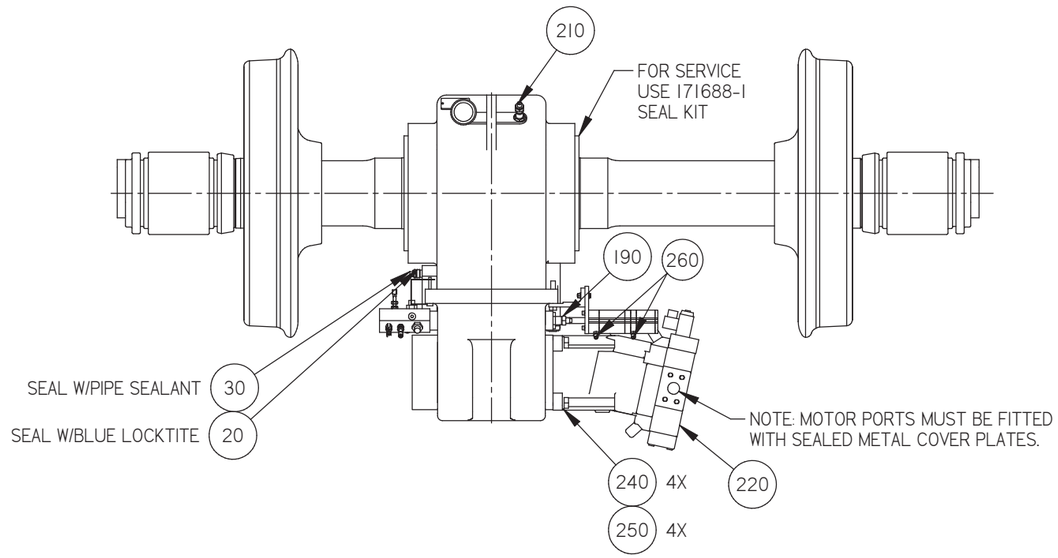

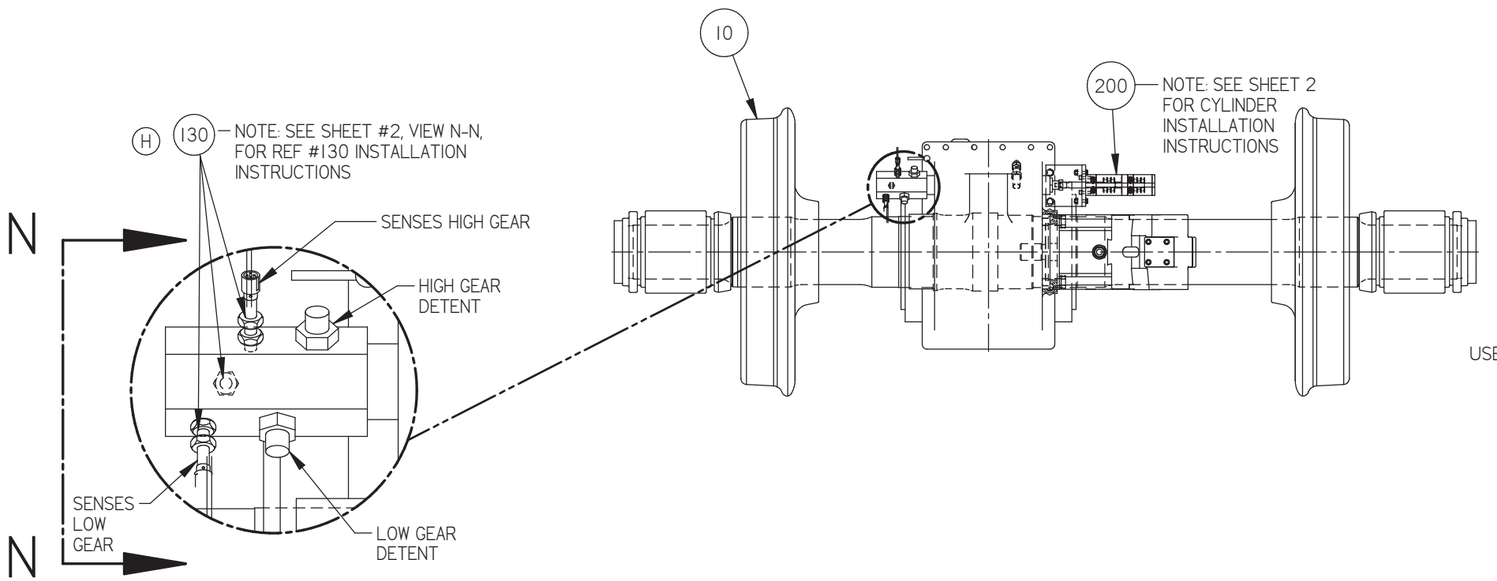

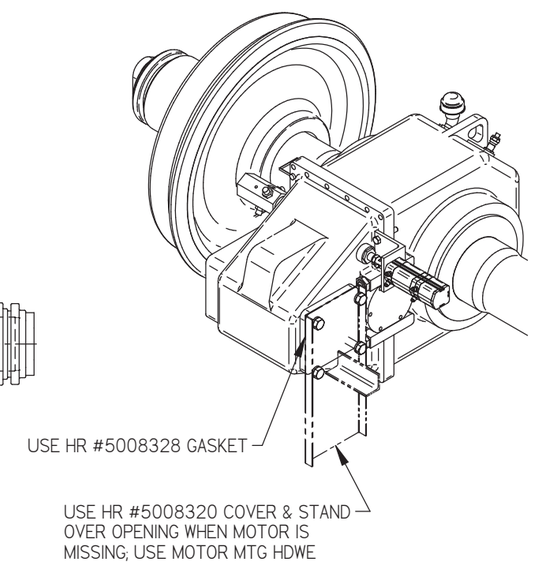

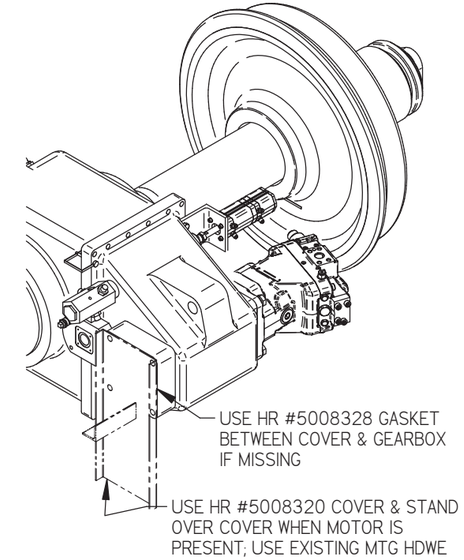

SHIPPING / STORAGE INFO

NOTE:
DO NOT DISCARD STAND OR GASKET
AFTER INSTALLING AT NEXT LEVEL;
RETURN TO LARGE ASSEMBLY FOR RE-USE

Inch [mm]

CONFIDENTIAL
© COPYRIGHT 2011 HARSCO. THIS DRAWING OR DOCUMENT IS THE PROPERTY OF HARSCO AND EMBODIES CONFIDENTIAL INFORMATION, TRADE SECRET INFORMATION, AND/OR KNOW-HOW THAT IS THE PROPERTY OF HARSCO. BY ACCEPTING THIS DRAWING OR DOCUMENT, THE RECIPIENT AGREES (1) NOT TO PROVIDE, OR OTHERWISE MAKE AVAILABLE, THE DRAWING OR DOCUMENT, OR ANY INFORMATION OR KNOW-HOW EMBODIED THEREIN, TO ANY THIRD PARTY AND (2) NOT TO REPRODUCE OR USE THE DRAWING OR DOCUMENT TO MANUFACTURE ANY APPARATUS OR DEVICE, WITHOUT THE PRIOR WRITTEN AUTHORIZATION OF HARSCO.

NOMINAL SIZE RANGE		INCH PLUS OR MINUS		NOMINAL SIZE RANGE		METRIC PLUS OR MINUS	
OVER	TO	2 PLACE DECIMAL	3 PLACE DECIMAL	OVER	TO	1 PLACE DECIMAL	2 PLACE DECIMAL
0	6	.03	.005	0	150	.8	.13
6	24	.04	.008	150	600	1.0	.20
24	-	.06	.010	600	-	1.5	.25

UNLESS OTHERWISE SPECIFIED ALL MACHINED SURFACES WILL HAVE:
A SURFACE FINISH OF 125 MICRONCHES
ANGULAR TOLERANCE OF +/- 50'
CONCENTRICITY WITHIN: .010

THIRD ANGLE PROJECTION

UNLESS OTHERWISE SPECIFIED, ALL WELDS SHOULD ADHERE TO THE MOST CURRENT A.W.S WELDING STANDARDS

CHANGE	R/L	REVISION	DR	DATE
EC500075	D	SEE EC	DBB	05-11-11
EC501493	E	ADD IT'S 270 THRU 310, DEL IT 150, IT 110 WAS F014487, IT 160 WAS 408702	CTR	22JUL11
EC502062	F	DELETED IT'S 50 THRU 110	SRK	09-23-11
EC502683	G	PICTORIAL UPDATE	BCB	1-13-12
EC503235	H	ITEM 130 WAS 2000770.	HW	03-22-12

Description: DRIVE AXLE SUB-ASSEMBLY

HARSCO RAIL

Material: ----- | Machine Type: MARK IV | Size: D

Weight: 3317.0 lbm | Drawn: skumar | Date Drawn: 03-19-10 | Part Number: 2019160 | Sheet 1 of 2

SOLID EDGE DRAWING | DO NOT SCALE

TRANSMISSION SHIFT CYLINDER INSTALLATION

1. PLACE TRANSMISSION SHIFT SHAFT IN THE NEUTRAL DETENT POSITION. SEE VIEW WITH APPROXIMATE DIMENSION. NEUTRAL DETENT MAY NEED TO BE ADJUSTED IN TO INSURE DETENT IS SEATED AND SHIFT SHAFT HAS MINIMAL MOVEMENT.
2. INSTALL MOUNTING BRACKET ON TO TRANSMISSION, LEAVING BOLTS LOOSE.
3. INSTALL JAM NUT ON TO CYLINDER ROD.
4. APPLY BLUE LOCTITE 242 ON TO 3/8-24 THREADS OF CYLINDER ROD AND THREAD AGAINST SHIFT SHAFT.
5. APPLY BLUE LOCTITE 242 TO 5/8-18 THREADS OF CYLINDER ROD AND TIGHTEN AGAINST SHIFT SHAFT.
6. APPLY BLUE LOCTITE242 TO CYLINDER MOUNTING SCREWS AND MOUNT CYLINDER TO MOUNT BRACKET WITH LOCKWASHER.
7. PUT AIR CYLINDER IN NEUTRAL POSITION BY APPLYING AIR TO PORTS SHOWN ON DRAWING.
8. TIGHTEN MOUNTING BRACKET BOLTS.
9. AFTER SETTING DETENTS, INSTALLING PROX SWITCHES & ADJUSTING CYLINDER, CAP CYLINDER PORTS WITH F014689 CAP NUTS (#4 JIC). RETURN NUTS TO LARGE ASSEMBLY AFTER INSTALLING DRIVE AXLE ON MACHINE.

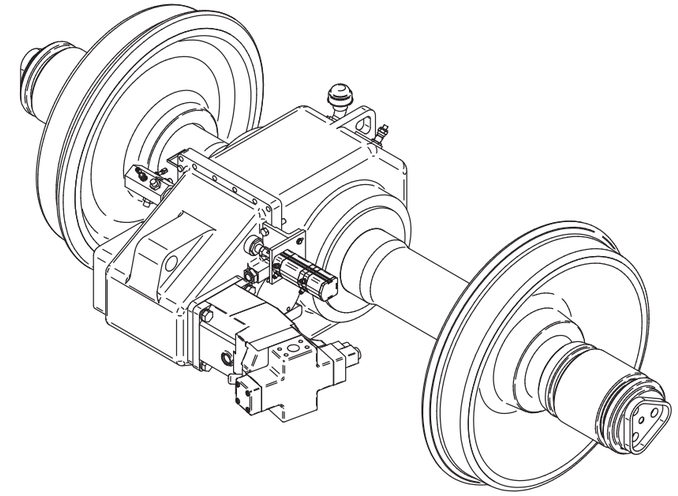

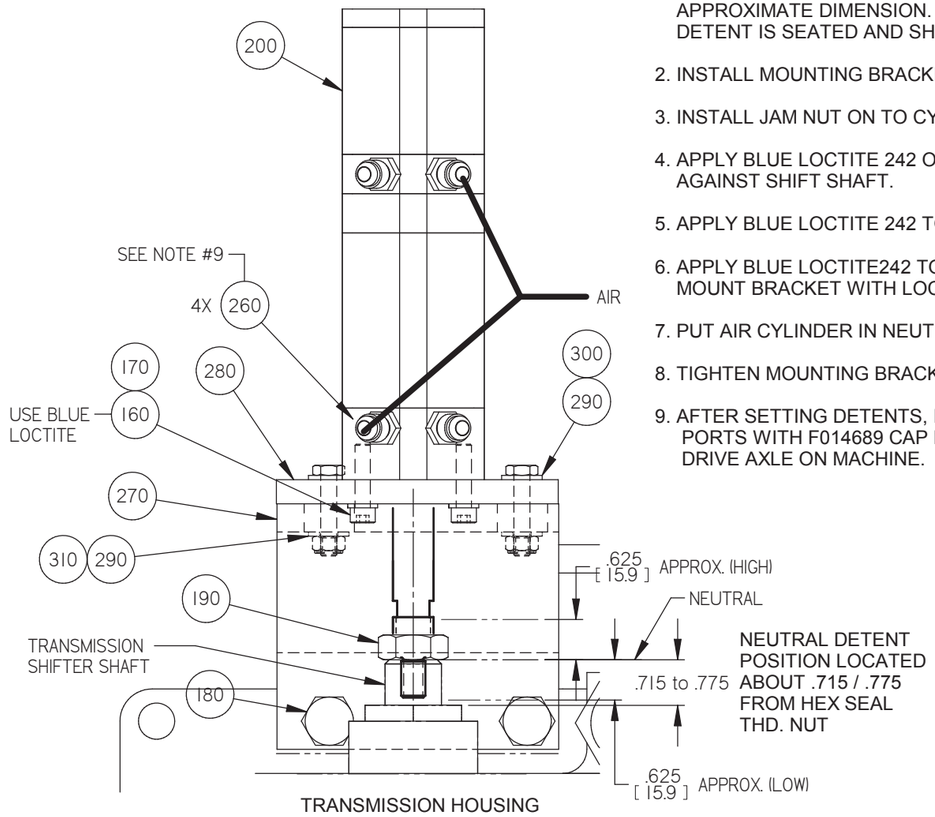

DETAIL OF AIR SHIFT ASSEMBLY

ASSEMBLY NOTES TO ADJUST DETENT(S):

1. PLACE TRANSMISSION IN NEUTRAL GEAR
2. REMOVE ALL 3 DETENTS & PLACE GREASE ON THE DETENT BALLS. NOTE: DURING STARTUP, IF BALLS ARE NOT GREASED, SHIFTING IS DIFFICULT.
3. ADJUST HIGH GEAR DETENT SO THAT DETENT TIP JUST CONTACTS SHIFT SHAFT.
4. TURN IN 3/4 TURN (.068 IN/1.7 MM).
5. TIGHTEN JAM NUT TO 75 FT-LB (102 Nm) MAX. ENSURE THAT DETENT DOES NOT TURN WHEN TIGHTING JAM NUT.
6. REPEAT FOR LOW GEAR DETENT WHILE IN NEUTRAL GEAR.
7. SHIFT TO EITHER HIGH OR LOW GEAR. REPEAT STEPS 2 THRU 5 FOR NEUTRAL DETENT.
8. SHIFT THROUGH THE 3 POSITIONS TWO OR THREE TIMES TO ENSURE SMOOTH SHIFTING.

PROX SWITCH (REF 130) SETTING PROCEDURE

1. PLACE TRANSMISSION IN NEUTRAL
2. REMOVE M8 X 1.0 SCREW & LOCKWASHER AT NEUTRAL PROX SWITCH LOCATION
3. INSTALL REF 130 PROX SWITCH INTO NEUTRAL SWITCH LOCATION UNTIL IT CONTACTS THE INTERNAL SHIFT SHAFT MECHANISM
4. BACK OUT 1 TURN (1../.039 IN)
5. TIGHTEN JAMNUT TO 4 FT. LBS MAX.
6. SHIFT TRANSMISSION TO HIGH AND LOW; REPEAT STEPS 2 THRU 5 WITH EACH POSITION.

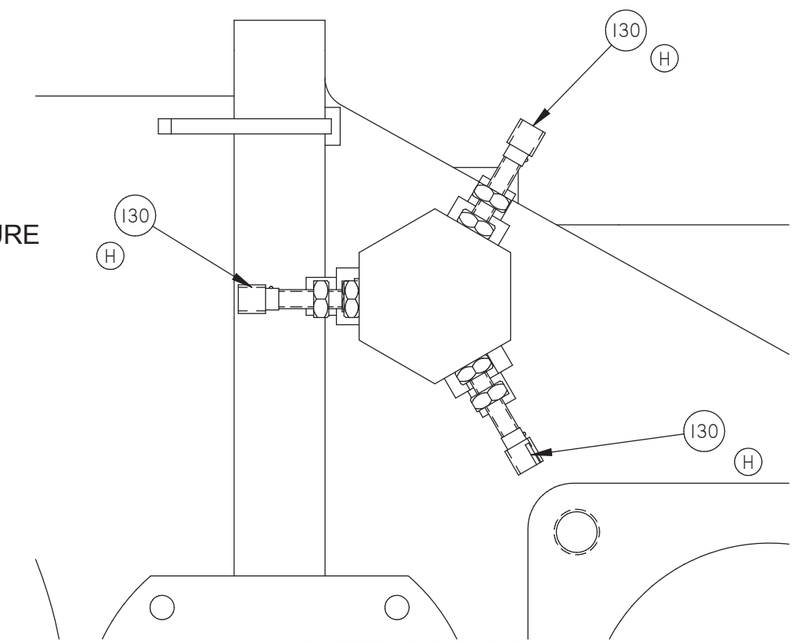

VIEW N-N

REF SHT 1 FOR HIGH, NEUTRAL, LOW SENSOR LOCATION.
NOTE: WHEN INSTALLING ITEM 130 (3) PLCS
CARE TO BE TAKEN NOT TO TWIST CABLE.
REMOVE ALL TWIST AFTER SETTING SENSORS.
TORQUE ON JAM NUTS TO BE 4 FT. LBS. MAX.

Inch
[mm]

CONFIDENTIAL
© COPYRIGHT 2011 HARSCO. THIS DRAWING OR DOCUMENT IS THE PROPERTY OF HARSCO AND EMBODIES CONFIDENTIAL INFORMATION, TRADE SECRET INFORMATION, AND/OR KNOW-HOW THAT IS THE PROPERTY OF HARSCO. BY ACCEPTING THIS DRAWING OR DOCUMENT, THE RECIPIENT AGREES (1) NOT TO PROVIDE, OR OTHERWISE MAKE AVAILABLE, THE DRAWING OR DOCUMENT, OR ANY INFORMATION OR KNOW-HOW EMBODIED THEREIN, TO ANY THIRD PARTY AND (2) NOT TO REPRODUCE OR USE THE DRAWING OR DOCUMENT TO MANUFACTURE ANY APPARATUS OR DEVICE, WITHOUT THE PRIOR WRITTEN AUTHORIZATION OF HARSCO.

NOMINAL SIZE RANGE		INCH PLUS OR MINUS	
OVER	TO	2 PLACE DECIMAL	3 PLACE DECIMAL
0	6	.03	.005
6	24	.04	.008
24	-	.06	.010

NOMINAL SIZE RANGE		METRIC PLUS OR MINUS	
OVER	TO	1 PLACE DECIMAL	2 PLACE DECIMAL
0	150	.8	.13
150	600	1.0	.20
600	-	1.5	.25

UNLESS OTHERWISE SPECIFIED ALL MACHINED SURFACES WILL HAVE:
A SURFACE FINISH OF 125 MICROINCHES
ANGULAR TOLERANCE OF +/- 50'
CONCENTRICITY WITHIN .010

THIRD ANGLE PROJECTION

UNLESS OTHERWISE SPECIFIED, ALL WELDS SHOULD ADHERE TO THE MOST CURRENT A.W.S WELDING STANDARDS

CHANGE	R/L	REVISION	DR	DATE
EC500075	D	SEE EC	DBB	05-11-11
EC501493	E	ADD IT'S 270 THRU 310, DEL IT 150, IT 110 WAS F014487, IT 160 WAS 408702	CTR	22JUL11
EC502062	F	DELETED IT'S 50 THRU 110	SRK	09-23-11
EC502683	G	PICTORIAL UPDATE	BCB	1-13-12
EC503235	H	ITEM 130 WAS 2000770.	HW	03-22-12

Description: DRIVE AXLE SUB-ASSEMBLY
Material: ----
Weight: 3317.0 lbm
Drawn: skumar
Date Drawn: 03-19-10
Machine Type: MARK IV
Part Number: 2019160
Size: D
Sheet: 2 of 2
SOLID EDGE DRAWING
DO NOT SCALE
HARSCO RAIL

ITEM	PART NO	QTY	DESCRIPTION
10	411428-1	2	WHEEL- PROFILE MACHINED
20	2005757	1	AXLE WITH GEAR BOX
30	450091-2	2	NEW BEARING (ASSEMBLY)

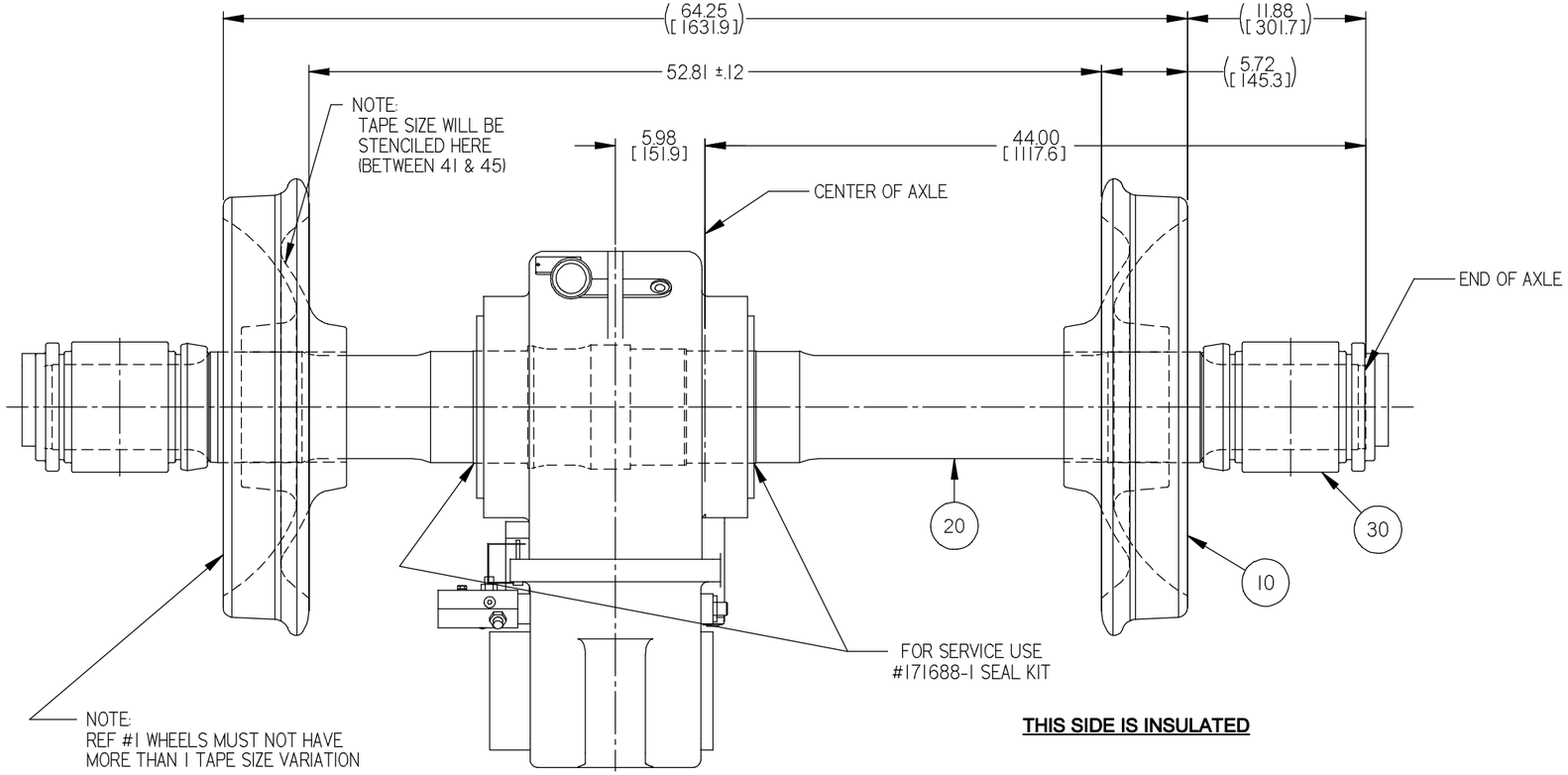

THIS SIDE IS INSULATED

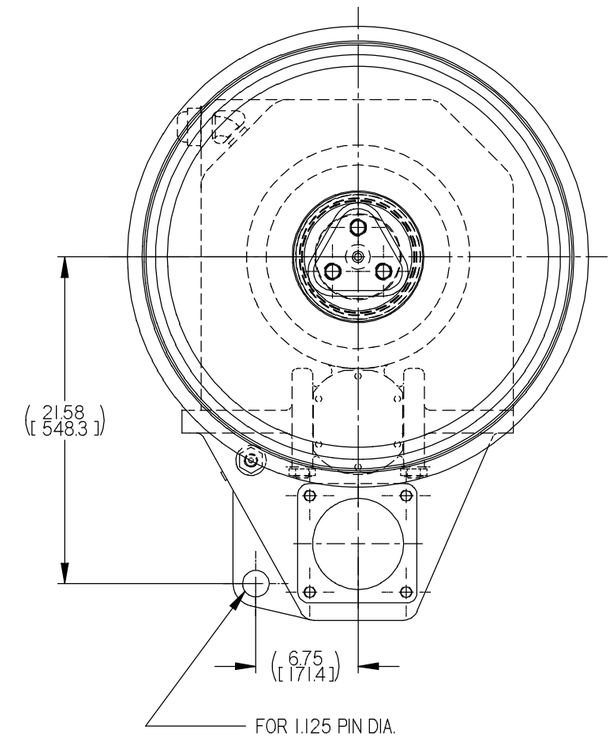

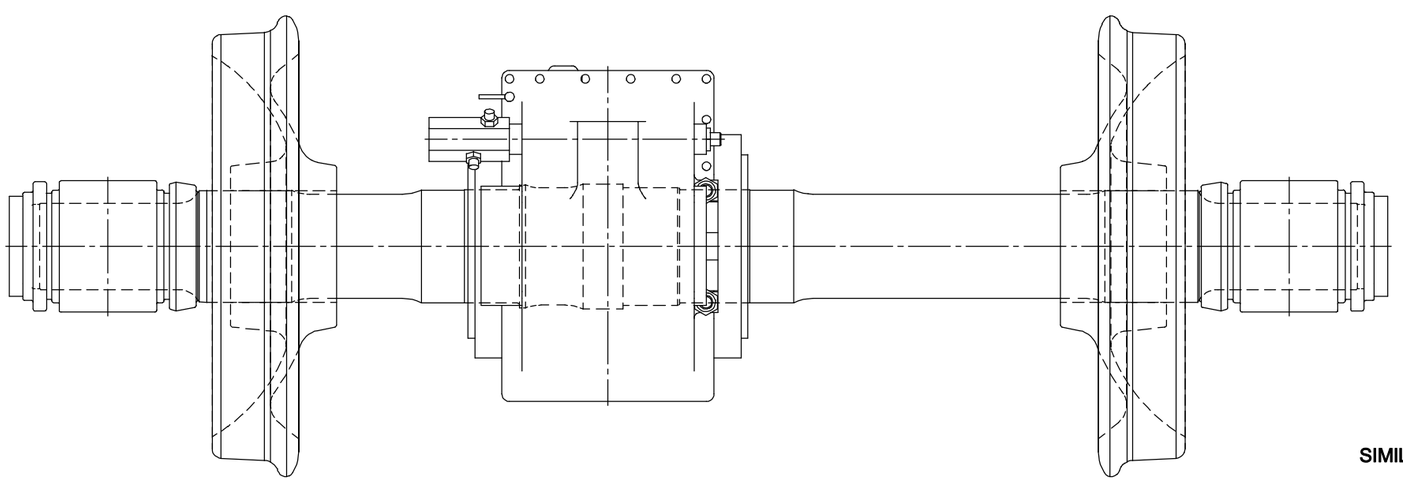

SIMILAR TO 2005770

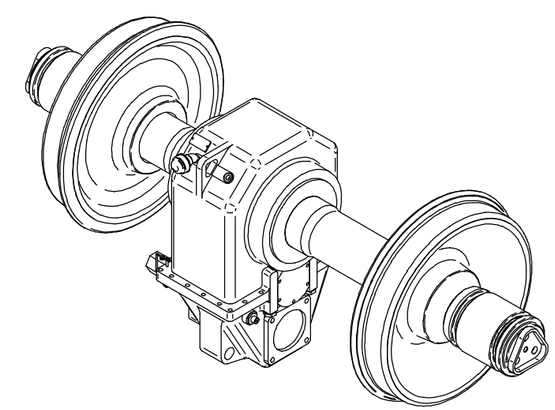

Inch
[mm]

CONFIDENTIAL
© COPYRIGHT 2011 HARSCO. THIS DRAWING OR DOCUMENT IS THE PROPERTY OF HARSCO AND EMBODIES CONFIDENTIAL INFORMATION, TRADE SECRET INFORMATION, AND/OR KNOW-HOW THAT IS THE PROPERTY OF HARSCO. BY ACCEPTING THIS DRAWING OR DOCUMENT, THE RECIPIENT AGREES (1) NOT TO PROVIDE, OR OTHERWISE MAKE AVAILABLE, THE DRAWING OR DOCUMENT, OR ANY INFORMATION OR KNOW-HOW EMBODIED THEREIN, TO ANY THIRD PARTY AND (2) NOT TO REPRODUCE OR USE THE DRAWING OR DOCUMENT TO MANUFACTURE ANY APPARATUS OR DEVICE, WITHOUT THE PRIOR WRITTEN AUTHORIZATION OF HARSCO.

NOMINAL SIZE RANGE		INCH PLUS OR MINUS	
OVER	TO	2 PLACE DECIMAL	3 PLACE DECIMAL
0	6	.03	.005
6	24	.04	.008
24	-	.06	.010

NOMINAL SIZE RANGE		METRIC PLUS OR MINUS	
OVER	TO	1 PLACE DECIMAL	2 PLACE DECIMAL
0	150	.8	.13
150	600	1.0	.20
600	-	1.5	.25

UNLESS OTHERWISE SPECIFIED ALL MACHINED SURFACES WILL HAVE:
A SURFACE FINISH OF 125 MICROINCHES
ANGULAR TOLERANCE OF +- .50°
CONCENTRICITY WITHIN .010

THIRD ANGLE PROJECTION

UNLESS OTHERWISE SPECIFIED, ALL WELDS SHOULD ADHERE TO THE MOST CURRENT A.W.S WELDING STANDARDS

CHANGE	R/L	REVISION	DR	DATE
300347	A	RELEASE	CTR	19MAR10
EC500706	B	FORMAT UPDATED - SE FILES REPAIRED DUE TO T.C. DATA LOAD.	LRHW	16MAR11
EC502062	C	DELETED ITEM # 40 WAS 250703-1	SRK	09-29-11

Description: DRIVE AXLE ASSEMBLY

HARSCO RAIL

Material: --, --

Machine Type: MARK IV

Weight: 3055.2 lbm

Drawn: crosso

Date Drawn: 19MAR10

Part Number: 2019159

Size: D

Sheet: 1 of 1

SOLID EDGE DRAWING

DO NOT SCALE

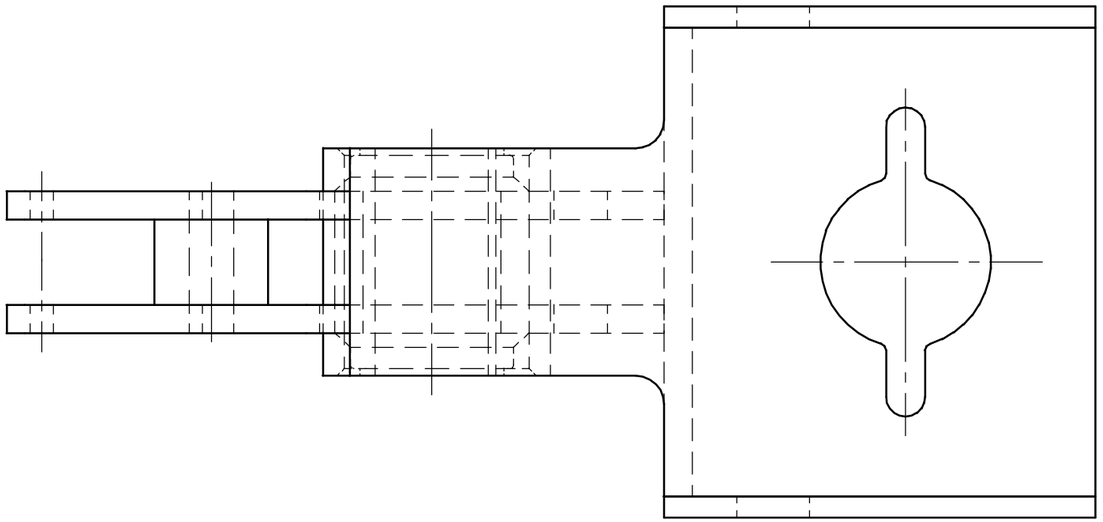

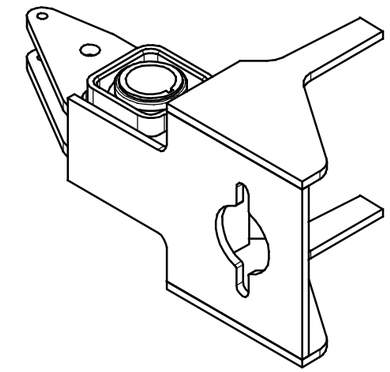

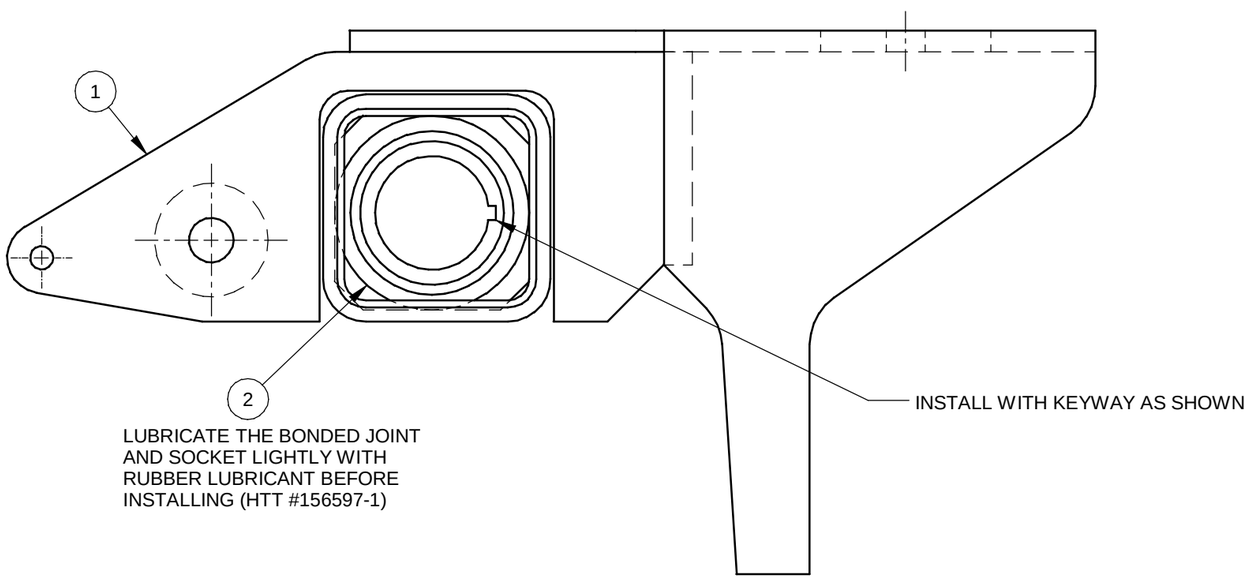

Inch
[mm]

SOLID EDGE DRAWING

CONFIDENTIAL

a COPYRIGHT 2008 HARSCO TRACK TECHNOLOGIES. THIS DRAWING OR DOCUMENT IS THE PROPERTY OF HARSCO TRACK TECHNOLOGIES AND EMBODIES CONFIDENTIAL INFORMATION, TRADE SECRET INFORMATION, AND/OR KNOW-HOW THAT IS THE PROPERTY OF HARSCO TRACK TECHNOLOGIES. BY ACCEPTING THIS DRAWING OR DOCUMENT, THE RECIPIENT AGREES (1) NOT TO PROVIDE, OR OTHERWISE MAKE AVAILABLE, THE DRAWING OR DOCUMENT, OR ANY INFORMATION OR KNOW-HOW EMBODIED THEREIN, TO ANY THIRD PARTY AND (2) NOT TO REPRODUCE OR USE THE DRAWING OR DOCUMENT TO MANUFACTURE ANY APPARATUS OR DEVICE, WITHOUT THE PRIOR WRITTEN AUTHORIZATION OF HARSCO TRACK TECHNOLOGIES.

IMPLIED TOLERANCES

ALL DIMENSIONS ARE IN INCHES - TOLERANCE UNLESS OTHERWISE SPECIFIED

NOMINAL SIZE RANGE		INCH PLUS OR MINUS		NOMINAL SIZE RANGE		METRIC PLUS OR MINUS	
OVER	TO	2 PLACE DECIMAL	3 PLACE DECIMAL	OVER	TO	1 PLACE DECIMAL	2 PLACE DECIMAL
0	6	.03	.005	0	150	.8	.127
6	24	.04	.008	150	600	1.0	.203
24	-	.06	.010	-	600	1.5	.254

UNLESS OTHERWISE SPECIFIED ALL MACHINED SURFACES WILL HAVE:
A SURFACE FINISH OF 125 MICRON CHES
ANGULAR TOLERANCE OF ±.50°
CONCENTRICITY WITHIN .003

THIRD ANGLE PROJECTION

UNLESS OTHERWISE SPECIFIED ALL WELDS SHOULD ADHERE TO THE LATEST HTT WELDING SPECIFICATION 101

CHANGE	R/L	REVISION	DATE
CCE		REDRAWN IN SOLID EDGE	13OCT08

Description: BRAKE ARM WELDMENT AIR CHAMBER

Drawing Number: 330871-1, -

Machine Type:

Model:

Drawn: CCE

Date Drawn: 13OCT08

Weight: 37.2 lbm

Scale: ---

A/N/D Dsg:

A/N/D Chk'dg:

Mat'l:

HTT
Harsco Track Technologies
Harsco
Ludington, MI

Part Number: 330871-1, -

Sheet: 1 of 1

Assembly No.	330871-1
Revision	-

Ref	PartNumber	Description	Qty	Len	UOM	Cut Len
1	314007-1	BRAKE BEAM WELD	1		pc	
2	116735-1	SQ.CTR.BONDED JOINT	1		pc	

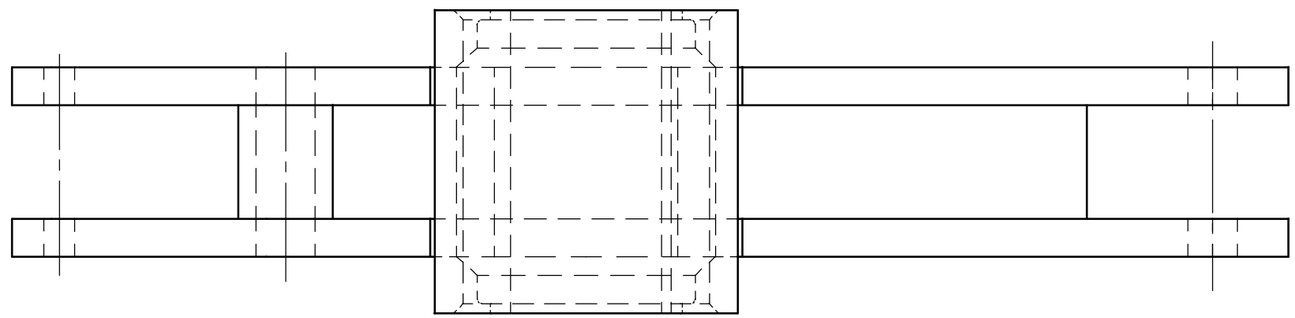

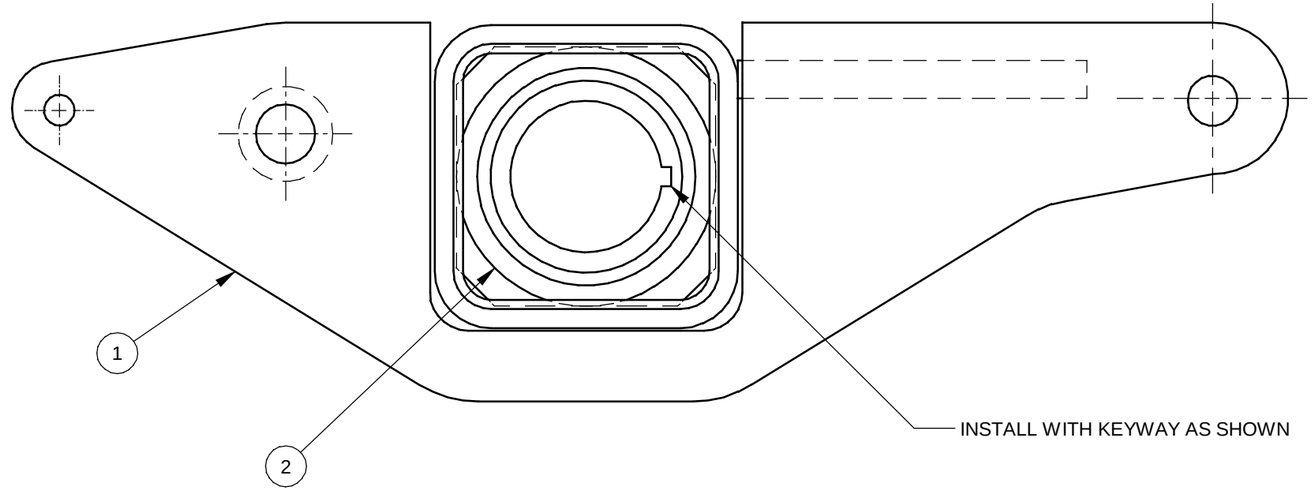

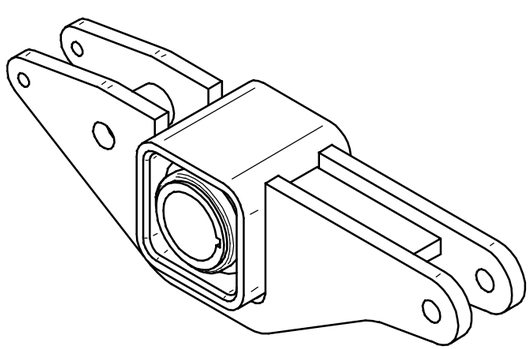

LUBRICATE THE BONDED JOINT
AND SOCKET LIGHTLY WITH
RUBBER LUBRICANT BEFORE
INSTALLING (HTT #156597-1)

Inch
[mm]

SOLID EDGE DRAWING

CONFIDENTIAL
© COPYRIGHT 2008 HARSCO TRACK TECHNOLOGIES. THIS DRAWING OR DOCUMENT IS THE PROPERTY OF HARSCO TRACK TECHNOLOGIES AND EMBODIES CONFIDENTIAL INFORMATION, TRADE SECRET INFORMATION, AND/OR KNOW-HOW THAT IS THE PROPERTY OF HARSCO TRACK TECHNOLOGIES. BY ACCEPTING THIS DRAWING OR DOCUMENT, THE RECIPIENT AGREES (1) NOT TO PROVIDE, OR OTHERWISE MAKE AVAILABLE, THE DRAWING OR DOCUMENT, OR ANY INFORMATION OR KNOW-HOW EMBODIED THEREIN, TO ANY THIRD PARTY AND (2) NOT TO REPRODUCE OR USE THE DRAWING OR DOCUMENT TO MANUFACTURE ANY APPARATUS OR DEVICE, WITHOUT THE PRIOR WRITTEN AUTHORIZATION OF HARSCO TRACK TECHNOLOGIES.

IMPLIED TOLERANCES
ALL DIMENSIONS ARE IN INCHES - TOLERANCE UNLESS OTHERWISE SPECIFIED

NOMINAL SIZE RANGE		INCH PLUS OR MINUS		NOMINAL SIZE RANGE		METRIC PLUS OR MINUS	
OVER	TO	2 PLACE DECIMAL	3 PLACE DECIMAL	OVER	TO	1 PLACE DECIMAL	2 PLACE DECIMAL
0	6	.03	.005	0	150	.8	.127
6	24	.04	.008	150	600	1.0	.203
24	-	.06	.010	-	600	1.5	.254

UNLESS OTHERWISE SPECIFIED ALL MACHINED SURFACES WILL HAVE:
A SURFACE FINISH OF 125 MICRO-INCHES
ANGULAR TOLERANCE OF ± 50'
CONCENTRICITY WITHIN .010

THIRD ANGLE PROJECTION

UNLESS OTHERWISE SPECIFIED ALL WELDS SHOULD ADHERE TO THE LATEST HTT WELDING SPECIFICATION 101

CHANGE	R/L	REVISION	DATE
CCE		REDRAWN IN SOLID EDGE	13OCT08

Description: BRAKE ARM ASSEMBLY AIR CHAMBER

Drawing Number: 330872-1, -

Machine Type: BRAKE ARM ASSY

Model:

Drawn: CCE

Date Drawn: 13OCT08

Weight: 21.3 lbm

Scale: ---

APVD Dwg:

APVD Dtdng:

Mat'l:

HTT
Harsco Track Technologies
Harsco
Ludington, MI

Part Number: 330872-1, -

Sheet: 1 of 1

Assembly No.	330872-1
Revision	-

Ref	PartNumber	Description	Qty	Len	UOM	Cut Len
1	412407-1	BRAKE ARM WELD-ADJ	1		pc	
2	116735-1	SQ.CTR.BONDED JOINT	1		pc	

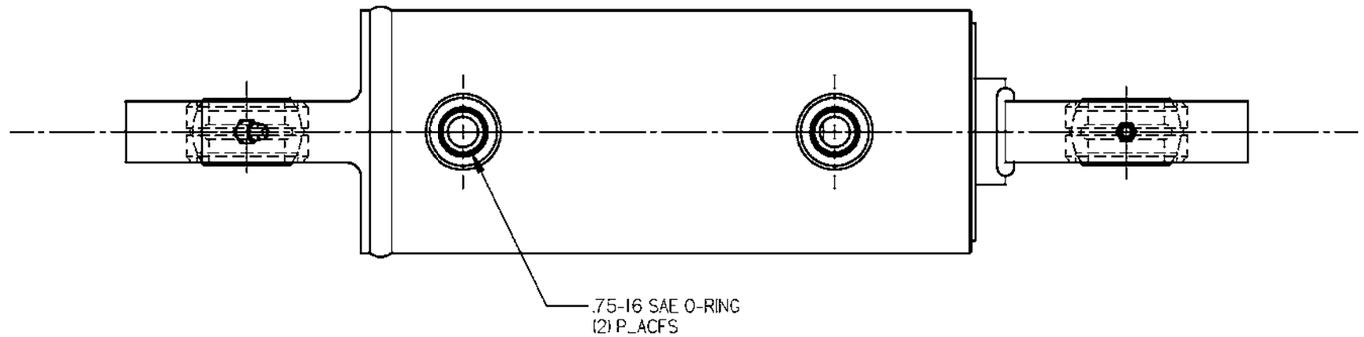

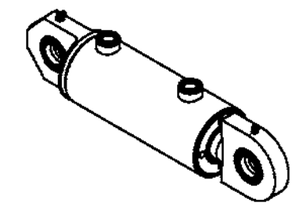

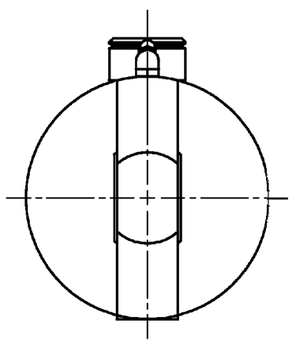

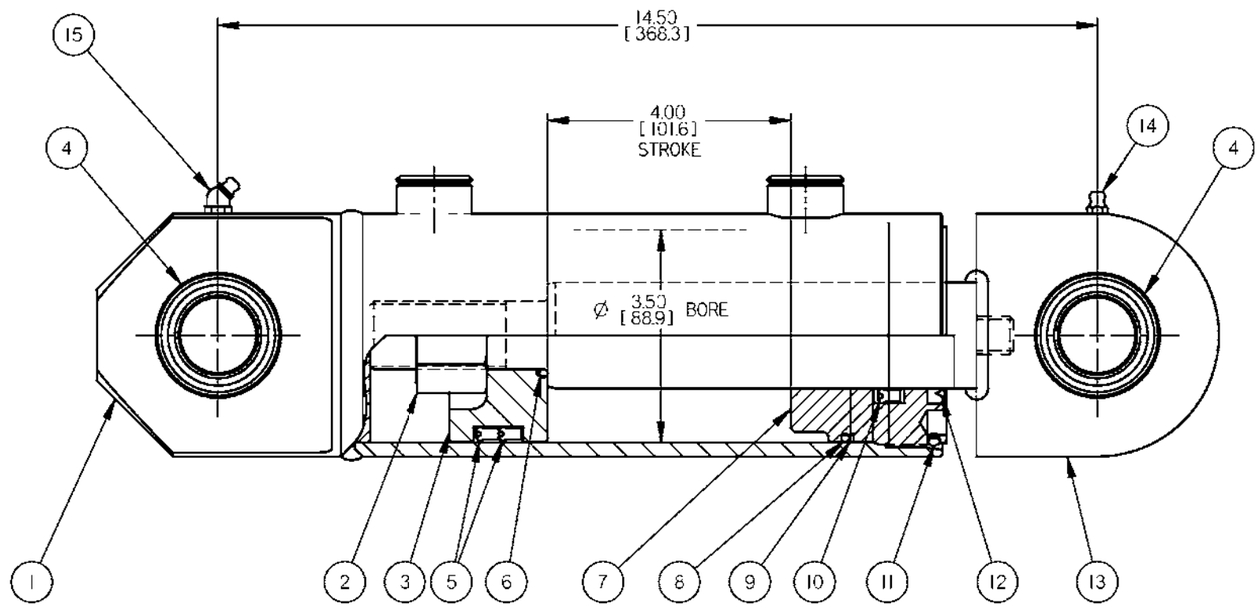

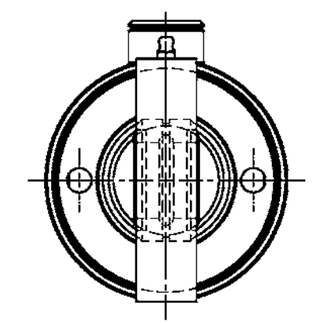

FOR SERVICE USE #240370-1 SERVICE KIT

** DENOTES PARTS INCLUDED WITH SERVICE KIT*

Inch
[mm]

SOLID EDGE DRAWING

CONFIDENTIAL
© COPYRIGHT 2009 HARSCO. THIS DRAWING OR DOCUMENT IS THE PROPERTY OF HARSCO AND EMBODIES CONFIDENTIAL INFORMATION TRADE SECRET INFORMATION, AND OR KNOW-HOW THAT IS THE PROPERTY OF HARSCO. BY ACCEPTING THIS DRAWING OR DOCUMENT THE RECIPIENT AGREES (1) NOT TO PROVIDE OR OTHERWISE MAKE AVAILABLE THE DRAWING OR DOCUMENT OR ANY INFORMATION OR KNOW HOW EMBODIED THEREIN TO ANY THIRD PARTY AND (2) NOT TO REPRODUCE OR USE THE DRAWING OR DOCUMENT TO MANUFACTURE ANY APPARATUS OR DEVICE WITHOUT THE PRIOR WRITTEN AUTHORIZATION OF HARSCO

UNLESS OTHERWISE SPECIFIED ALL DIMENSIONS ARE IN INCHES [MILLIMETERS]
ALL MACHINED SURFACES TO HAVE 125 RMS FINISH
ALL MACHINED CORNERS TO HAVE .030 MAX RADIUS
ALL FORGINGS, CASTINGS, AND PLASTICS TO HAVE .125 MAX RADIUS

		FLOW				METRIC			

ECN or C	REV	REVISION	DATE
COL	A	REDRAWN IN SOLID EDGE	08MAY09

DESCRIPTION: HYDRAULIC CYLINDER

DESIGN ENGINEER:
DRAWN: CCE 08MAY09
CHECKED:
WEIGHT: 30.1 lbm
SCALE: ---
APP:
APP:

HARSCO
Lehigh, KY

SIZE: A
330840-1
SHEET 1 of 1

Assembly No.	330840-1
Revision	A

Ref	PartNumber	Description	Qty	Len	UOM	Cut Len
1	222664-1	BARREL - WELDED	1		pc	
2	155336-7	LOCKNUT- NYLOCK, 1.12-12	1		pc	
3	218542-1	PISTON	1		pc	
4	150021-7	BEARING - SPHERICAL 1.250 ID X 2.00 OD	2		pc	
5	250632-1	PISTON SEAL	2		pc	
6	150395-7	O-RING, .139 THICK X 1.109 ID	1		pc	
7	311962-1	HEAD - CYL.	1		pc	
8	150395-27	O-RING, .139 THICK X 3.234 ID	1		pc	
9	156342-1	BACKING RING	1		pc	
10	156343-1	ROD SEAL	1		pc	
11	150012-17	O-RING, .210 THICK X 3.225 ID	1		pc	
12	156344-1	ROD WIPER	1		pc	
13	219073-1	CYLINDER ROD	1		pc	
14	2362	GREASE FITTING- STR, .25-28	1		pc	
15	155252-1	GREASE FITTING- 45, .25-28	1		pc	

ENG.DWG.NO. D2781WAA

REVISIONS							
NO	ER	DESCRIPTION	ZONE	DR	CK	APP	MF
1	6447 30	NEW RELEASE		RJM			

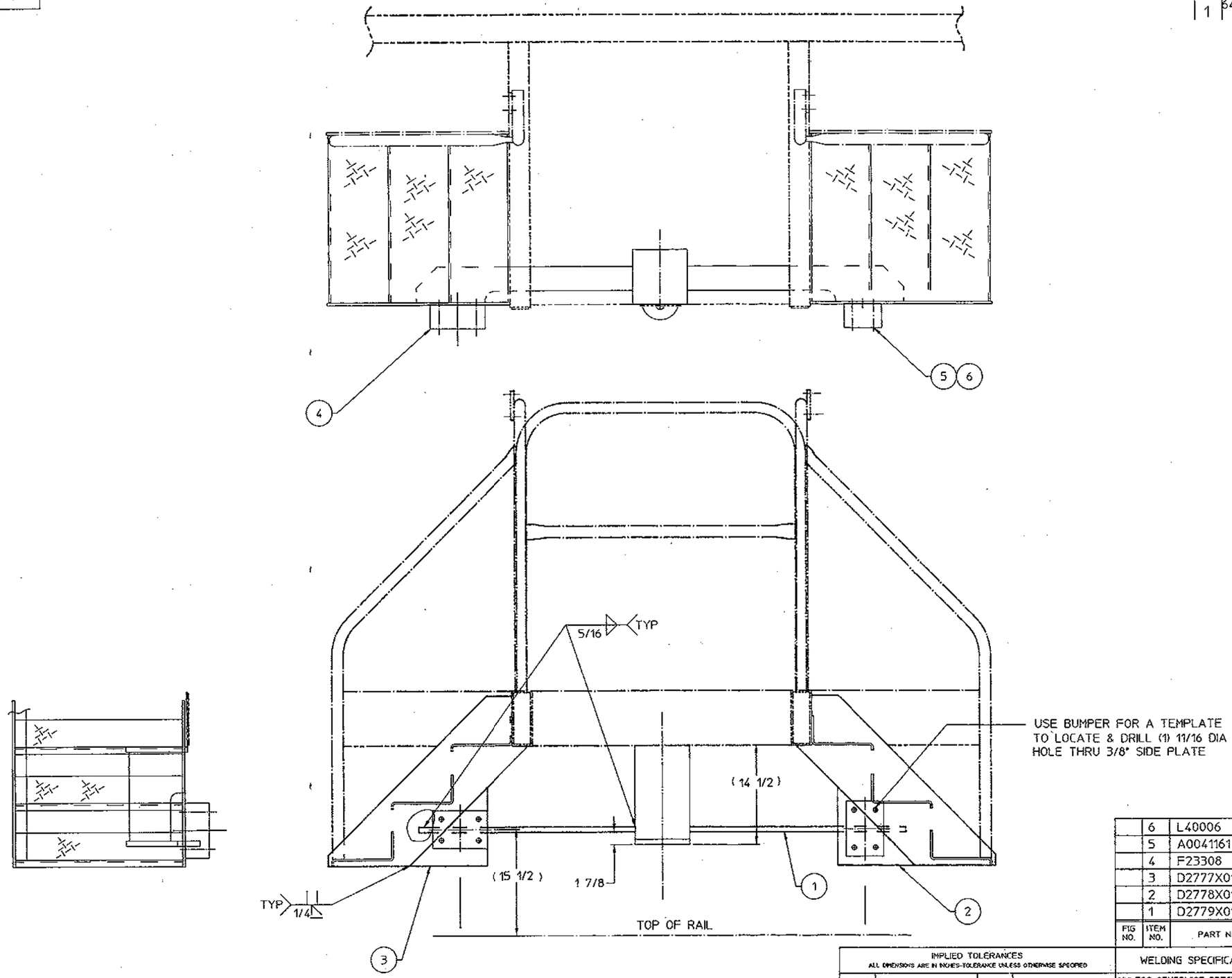

FIG NO.	ITEM NO.	PART NUMBER	DESCRIPTION AND MATERIAL SIZE (REF.ONLY)	QTY
	6	L40006	LOCK NUT 5/8-11	8
	5	A0041161	SOC. HD. CAP SCR 5/8 X 3 1/4	8
	4	F23308	MOLDED RUBBER BUMPER	2
	3	D2777X01	BUMPER PLATE L/H	1
	2	D2778X01	BUMPER PLATE R/H	1
	1	D2779X01	BRACE	2

IMPLIED TOLERANCES
ALL DIMENSIONS ARE IN INCHES-TOLERANCE UNLESS OTHERWISE SPECIFIED

NOMINAL SIZE RANGE		PLUS OR MINUS			NOMINAL SIZE RANGE		PLUS OR MINUS		
OVER	TO	FRACTION	2 PLACE DECIMAL	3 PLACE DECIMAL	OVER	TO	FRACTION	2 PLACE DECIMAL	3 PLACE DECIMAL
-	1	1/64	.01	.003	6	24	3/64	.03	.008
1	6	1/32	.02	.005	24	-	1/16	.05	.010

ANGULAR DIMENSIONS PLUS OR MINUS 1 DEGREE

√ ALL MACHINED SURFACES TO HAVE A SURFACE FINISH OF 125 MICRONCHES UNLESS OTHERWISE SPECIFIED.

W8

WELDING SPECIFICATION

UNLESS OTHERWISE SPECIFIED ALL WELDS SHOULD ADHERE TO FAIRMONT TAMPER WELDING SPECIFICATION NO. 101

WEIGHT lbs.

3rd ANGLE PROJECTION

DO NOT SCALE

LAST ITEM NO. USED

DESCRIPTION 024: BUMPER INSTAL.

DRAWN RJM	DATE 2-21-94	MACHINE TYPE MKIV
CHECKED	DATE 2-22-94	
APP-ENG	DATE 2-21-94	
APP-MFG	DATE	

SHEET 1 CONT. --- ON ---

ENG.DWG.NO. D2781WAA

Fairmont Tamper
2401 Edward Reed Blvd 20
Cayce-West Columbia,
South Carolina 29171-0020
(803) 822-9960

THIS DOCUMENT CONTAINS PROPRIETARY INFORMATION AND SUCH INFORMATION MAY NOT BE DISCLOSED TO OTHERS FOR ANY PURPOSE OR USED FOR MANUFACTURING PURPOSES WITHOUT THE WRITTEN PERMISSION OF FAIRMONT TAMPER.

CONFIDENTIAL

© COPYRIGHT 2009 HARSCO. THIS DRAWING OR DOCUMENT IS THE PROPERTY OF HARSCO AND EMBODIES CONFIDENTIAL INFORMATION, TRADE SECRET INFORMATION, AND/OR KNOW-HOW THAT IS THE PROPERTY OF HARSCO. BY ACCEPTING THIS DRAWING OR DOCUMENT, THE RECIPIENT AGREES (1) NOT TO PROVIDE, OR OTHERWISE MAKE AVAILABLE, THE DRAWING OR DOCUMENT, OR ANY INFORMATION OR KNOW-HOW EMBODIED THEREIN, TO ANY THIRD PARTY AND (2) NOT TO REPRODUCE OR USE THE DRAWING OR DOCUMENT TO MANUFACTURE ANY APPARATUS OR DEVICE, WITHOUT THE PRIOR WRITTEN AUTHORIZATION OF HARSCO.

ITEM	PART NO	DESCRIPTION	QTY
1	4031756	BRACKET, BYPASS	2
2	L422501	TERMINAL LUG, RING	2
3	F009825	HHCS .250-20X1.00	2
4	F013588	HEX ELASTIC STOP NUT .250-20	3
5	3406643	WIRE #14 (FT)	1
6	F003067	HHCS .250-20X.625	1

NOTES:
1. IN THE AREA WHERE THE BYPASS BRACKET IS TO BE INSTALLED ON THE FRONT AXLE, REMOVE PAINT AND HAND SAND UNTIL METAL IS BRIGHT.
2. SAND INSIDE OF THE BYPASS BRACKET TO BRIGHT METAL.
3. AFTER INSTALLATION OF BYPASS BRACKET (IT-1), APPLY TUBE SEALER, L410880, TO ALL EDGES AND ENDS OF THE BYPASS BRACKET TO SEAL AGAINST MOISTURE.

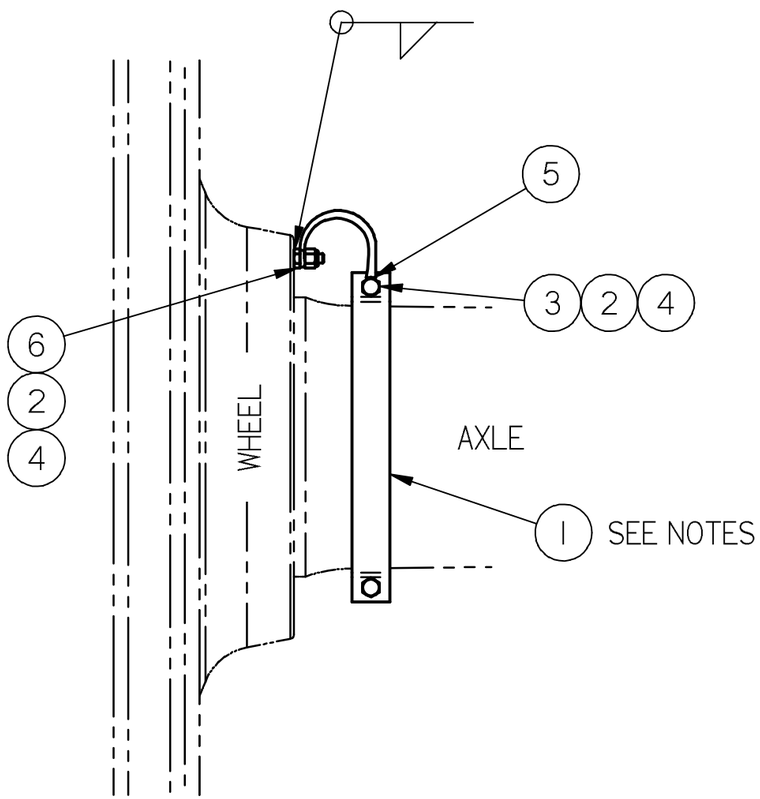

FRONT INSULATED WHEEL ONLY

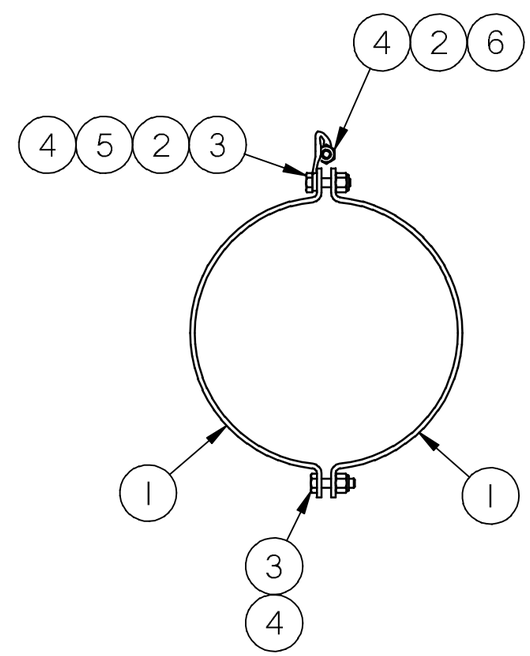

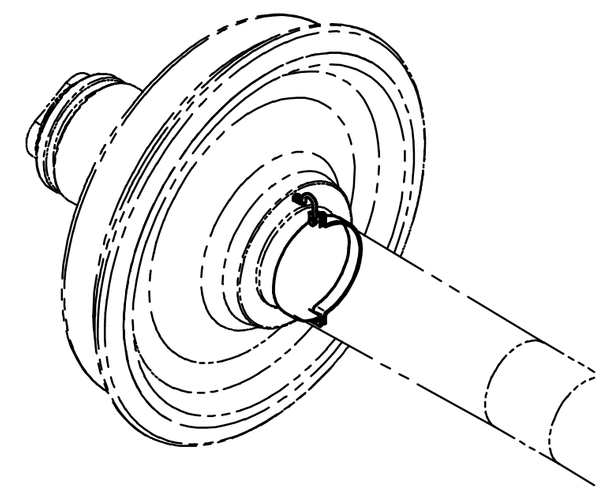

Inch
[mm]

NOMINAL SIZE RANGE		INCH PLUS OR MINUS		NOMINAL SIZE RANGE		METRIC PLUS OR MINUS	
OVER	TO	2 PLACE DECIMAL	3 PLACE DECIMAL	OVER	TO	1 PLACE DECIMAL	2 PLACE DECIMAL
0	6	.03	.005	0	150	.8	.13
6	24	.04	.008	150	600	1.0	.20
24	-	.06	.010	600	-	1.5	.25

UNLESS OTHERWISE SPECIFIED, ALL MACHINED SURFACES WILL HAVE:
A SURFACE FINISH OF 125 MICROINCHES
ANGULAR TOLERANCE OF ± .50°
CONCENTRICITY WITHIN .010

THIRD ANGLE PROJECTION

UNLESS OTHERWISE SPECIFIED, ALL WELDS SHOULD ADHERE TO THE MOST CURRENT A.W.S WELDING STANDARDS

CHANGE	R/L	REVISION	DR	DATE
106348	A	NEW RELEASE	BCB	9-2-10

Description: INSTALLATION, INSULATION BYPASS

Machine Type: INSTALLATION, INSULATION BYPASS

Weight: 0.0 lbm | Drawn: bbrunson | Date Drawn: 4/27/2011

SOLID EDGE DRAWING | DO NOT SCALE

HARSCO RAIL

Part Number: 4031757 | Size: B | Sheet: 1 of 1

Plotted by bbrunson on 4/27/2011 4031757.dft

ITEM	PART NO	QTY	DESCRIPTION
10	F010677	4	DC-MALE ELB90 4X2NPT *
20	F013193	4	ADAPTER 1/8 MP-1/4 JIC
30	F004252	4	DC-ZERK STR X 02NPT
40	C8555Y15	8	MICRO HOSE FITTING
50	C8555Y14	30	MICRO HOSE
80	F007506	23	CLIP
90	F013588	18	DC-1/4-20 ELAS STP NUT

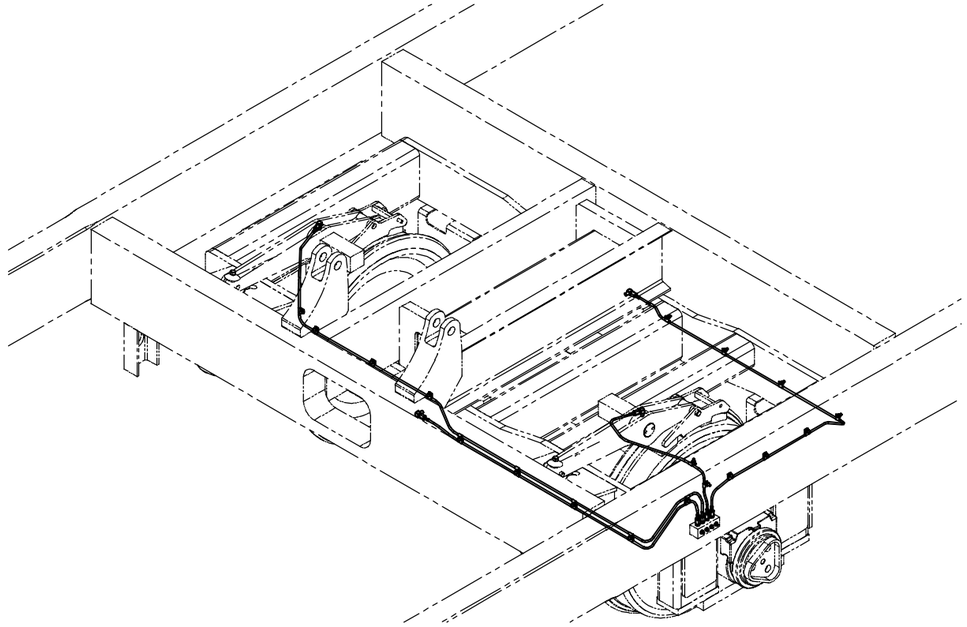

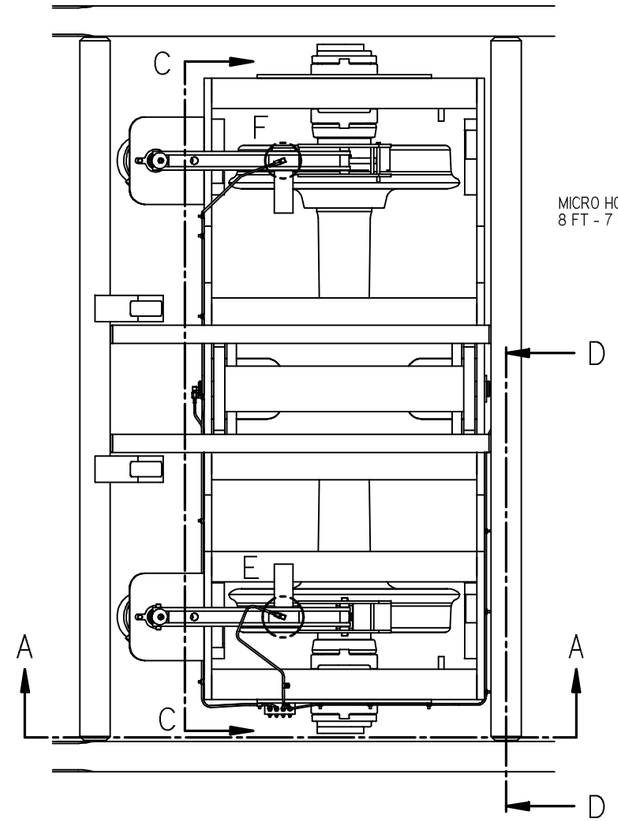

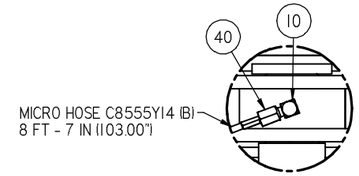

DETAIL F

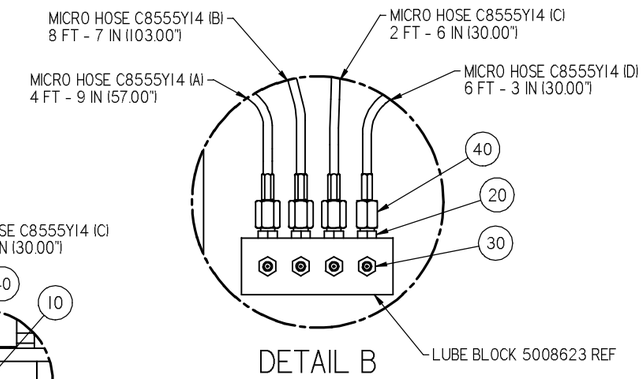

DETAIL B

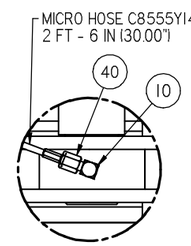

DETAIL E

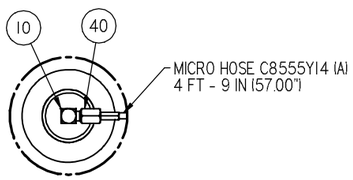

DETAIL G
LEAVE DISCONNECTED UNTIL
TRUCK IS INSTALLED ON TO FRAME

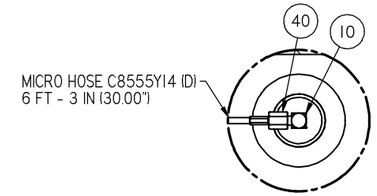

DETAIL H
LEAVE DISCONNECTED UNTIL
TRUCK IS INSTALLED ON TO FRAME

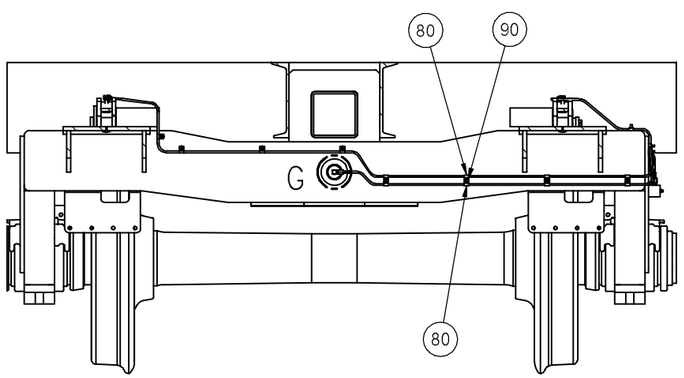

SECTION C-C

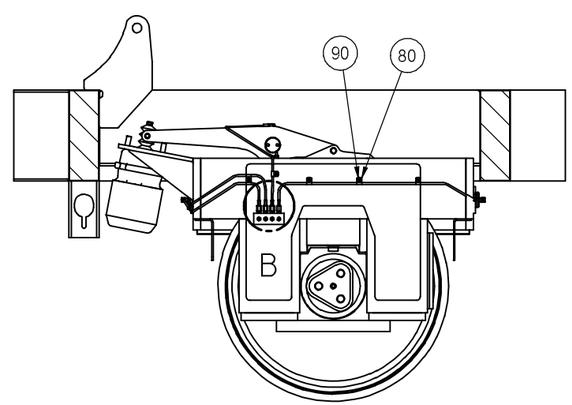

SECTION A-A

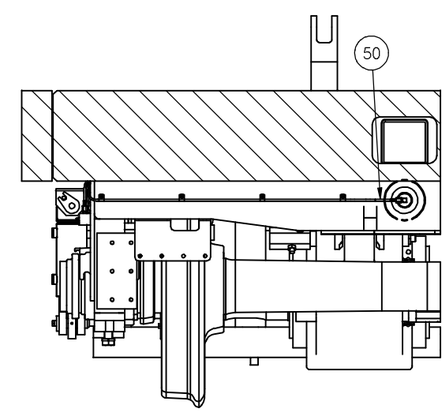

SECTION D-D

Inch
[mm]

CONFIDENTIAL
© COPYRIGHT 2011 HARSCO. THIS DRAWING OR DOCUMENT IS THE PROPERTY OF HARSCO AND EMBODIES CONFIDENTIAL INFORMATION, TRADE SECRET INFORMATION, AND/OR KNOW-HOW THAT IS THE PROPERTY OF HARSCO. BY ACCEPTING THIS DRAWING OR DOCUMENT, THE RECIPIENT AGREES (1) NOT TO PROVIDE, OR OTHERWISE MAKE AVAILABLE, THE DRAWING OR DOCUMENT, OR ANY INFORMATION OR KNOW-HOW EMBODIED THEREIN, TO ANY THIRD PARTY AND (2) NOT TO REPRODUCE OR USE THE DRAWING OR DOCUMENT TO MANUFACTURE ANY APPARATUS OR DEVICE, WITHOUT THE PRIOR WRITTEN AUTHORIZATION OF HARSCO.

NOMINAL SIZE RANGE		INCH PLUS OR MINUS	
OVER	TO	2 PLACE DECIMAL	3 PLACE DECIMAL
0	6	.03	.005
6	24	.04	.008
24	-	.06	.010

NOMINAL SIZE RANGE		METRIC PLUS OR MINUS	
OVER	TO	1 PLACE DECIMAL	2 PLACE DECIMAL
0	150	.8	.13
150	600	1.0	.20
600	-	1.5	.25

UNLESS OTHERWISE SPECIFIED ALL MACHINED SURFACES WILL HAVE;
A SURFACE FINISH OF 125 MICROINCHES
ANGULAR TOLERANCE OF ± .02°
CONCENTRICITY WITHIN .010

THIRD ANGLE PROJECTION

UNLESS OTHERWISE SPECIFIED, ALL WELDS SHOULD ADHERE TO THE MOST CURRENT AWS WELDING STANDARDS

CHANGE	R/L	REVISION	DR	DATE
EC105966	A	RELEASED	XXX	07-26-10
EC500869	B	UPDATED TO CURRENT BUILD; SEE EC	DBB	04-08-11
EC501277	C	ADD P-CLAMPS F007506 & 1/4-20 ESN F013588.	JMM	6-2-11

Description: REMOTE GREASE FITTING INSTALL.

HARSCO RAIL

Material: SEE BOM
Weight: 0.0 lbm
Machine Type: DRONE TAMPER
Drawn: fsami
Date Drawn: 07-26-10
Part Number: 4031112
Size: D
Sheet: 1 of 1

SOLID EDGE DRAWING
DO NOT SCALE

TAMPING COMPONENTS

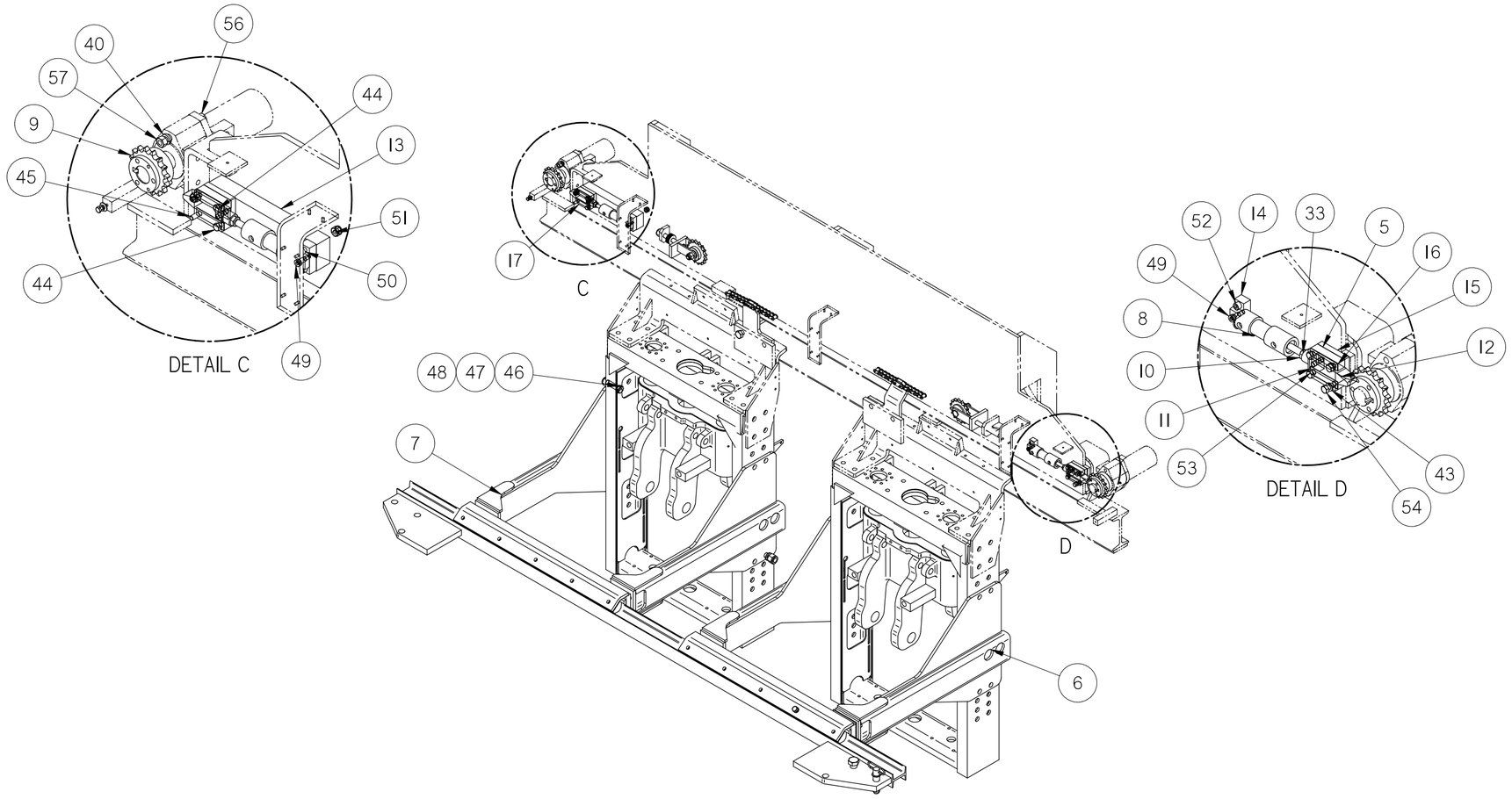

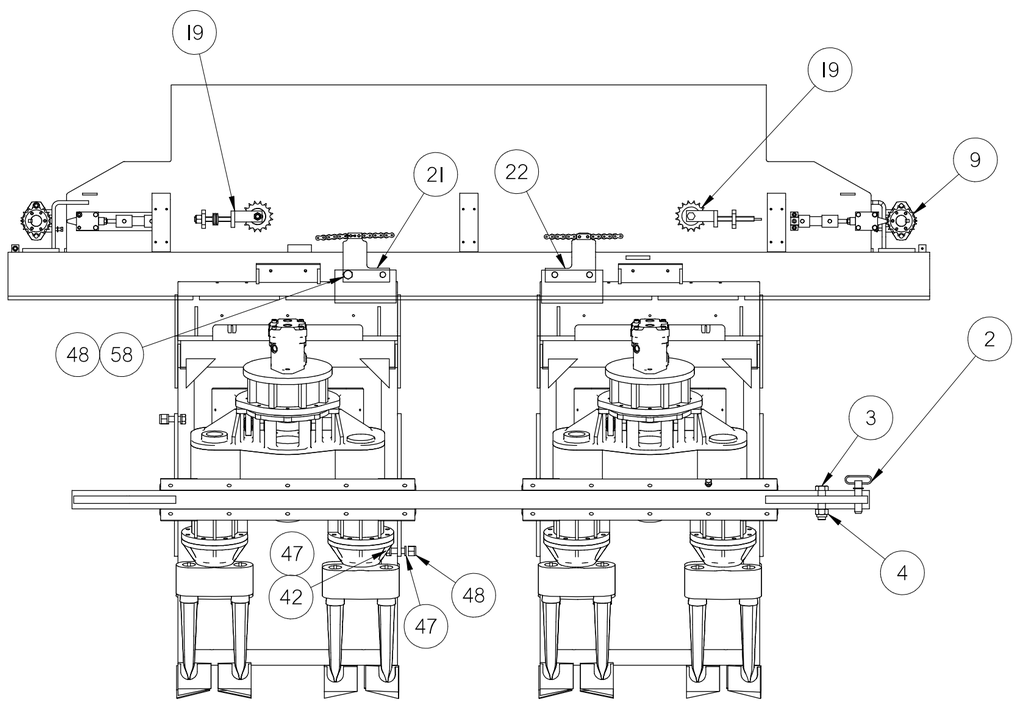

Item Number	Part Number	Description	Quantity
2	0-301 5004-0-18	HITCH PIN	2
3	F008286	HHCS 1.00-8X4.00	2
4	145446	1-8 ESNA NUT	2
5	0-1305835-0-01	BAR, GUIDE	4
6	4028349	WELDMENT, SUPPORT ARM	2
7	4028347	WELDMENT, SUPPORT ARM	2
8	0-3372001-0-01	1" BORE CYL	2
9	D8042Y01	SPROCKET ASSY	2
10	F011013_PAR2	HEX JAM NUT .500-20	2
11	0-301 5001-0-23	PIN, DOWEL	2
12	0-1305837-0-01	PAWL	2
13	0-1305832-0-01	PLATE, MTG	1
14	0-1305834-0-01	BAR, MTG	2
15	0-1305840-0-01	PLATE, BOTTOM	2
16	0-1305839-0-01	SHIM	4
17	0-1305836-0-01	PLATE, TOP	2
18	C0692X01	SLIDE PAD, W.H. SUPPORT	2
19	A4887XAA	IDLER, TRAVERSE	2
20	C0694XAA	SUPPORT BLOCK ASSY	4
21	D3129YAA	LINK WELDMENT	1
22	A1285X01	LINK	1
23	A1294Y01	CHAIN REWORK	2
24	A1293Y01	CAP LINK	4
25	C0689XAA	W.H. SUPPORT WLMDT	2
26	0-301 5002-0-28	CLEVIS PIN, Ø5/16	4
27	C0693X01	SHIM, SUPPORT BLOCK	4
28	F001104	COTTER PIN .125 X 1.00	4
29	0-301 9007-0-02	BELLEVILLE WASHER	32
30	F017188	HEX ELASTIC STOP NUT .625-11	2
31	A1441X01	CHAIN GUARD, L/H	1
32	A1457X01	CHAIN GUARD, R/H	1
33	0-1305838-0-01	ADAPTOR PAWL	2
36	A0061023_	LOCKWASHER, 1/2, HEAVY	20
37	F001095	HHCS .500-13X1.75	20
38	F014208	FLT HD SKT CS .500-13 X 1.25	10

Item Number	Part Number	Description	Quantity
39	C0701Y02	SHIM PLATE	12
40	F001075	LW .500	20
41	F018650	HHCS .500-13X1.50	16
42	F003778	HHCS .750-10X2.25	16
43	F001025	LW .375	10
44	F002690	HHCS .375-16X4.50	2
45	F002721	HHCS .375-16X3.75	2
46	F006382	HHCS .750-10X2.50	4
47	F001354	LW .75	48
48	L40108	3/4-10 ESNA NUT	28
49	Z752500-013	3/8 X 5/8 HEX SOCSHDSCR	2
50	F013789	SKT HD CS .375-16 X 3.50	2
51	F004600	HEX ELASTIC STOP NUT .375-16	10
52	F016324	SKT HD CS .375-16 X 2.00	2
53	F002915	HHCS .375-16X3.25	2
54	F002760	HHCS .375-16X2.25	2
55	F001125	DC-HEX HD CS 3/8-16X1 1/4 GR5	8
56	F001761	HHCS .500-13X4.00	4
57	F003598	HEX NUT .500-13	4
58	F003772	HHCS .750-10 x 2.75	4
59	F002355	HHCS .250-20X.75	16
60	F009535	LW .25	16
61	F001106	WROUGHT WASHER - .250	16

SOLID EDGE DRAWING

CONFIDENTIAL
© COPYRIGHT 2001 HARSCO TRACK TECHNOLOGIES. THIS DRAWING OR DOCUMENT IS THE PROPERTY OF HARSCO TRACK TECHNOLOGIES AND EMBODIES CONFIDENTIAL INFORMATION, TRADE SECRET INFORMATION, AND/OR KNOW-HOW THAT IS THE PROPERTY OF HARSCO TRACK TECHNOLOGIES. BY ACCEPTING THIS DRAWING OR DOCUMENT, THE RECIPIENT AGREES (1) NOT TO PROVIDE, OR OTHERWISE MAKE AVAILABLE, THE DRAWING OR DOCUMENT, OR ANY INFORMATION OR KNOW-HOW EMBODIED THEREIN, TO ANY THIRD PARTY AND (2) NOT TO REPRODUCE OR USE THE DRAWING OR DOCUMENT TO MANUFACTURE ANY APPARATUS OR DEVICE, WITHOUT THE PRIOR WRITTEN AUTHORIZATION OF HARSCO TRACK TECHNOLOGIES.

IMPLIED TOLERANCES
ALL DIMENSIONS ARE IN INCHES - TOLERANCE UNLESS OTHERWISE SPECIFIED

NOMINAL MEASUREMENT	INCH PLUS OR MINUS			METRIC PLUS OR MINUS		
OVER	TO	2 PLACE DECIMAL	3 PLACE DECIMAL	OVER	TO	1 PLACE DECIMAL	2 PLACE DECIMAL
0	6	.03	.005	0	150	.8	.13
6	24	.04	.006	150	600	1.0	.20
24	-	.06	.010	-	600	1.5	.25

UNLESS OTHERWISE SPECIFIED ALL WELDS SHOULD ADHERE TO THE LATEST HTT WELDING SPECIFICATION 101

THIRD ANGLE PROJECTION

CHANGE	R/L	REVISION	DATE
105417	A	RELEASE	04-12-10
105821	B	ITEM 6 WAS C0698VAA & ITEM 7 WAS C0698VAB	06-30-10
105949	C	DEL ITS 1 WAS X7110GA, 34 WAS 0-3624021-0-01 & 35 WAS L4111545	07-15-10

Description: TRAVERSING ASSEMBLY, W/H INSTL
Drawing Number: TRAVERSING ASSEMBLY, W/H INSTL
Model: 4029012.asm
Weight: 0.0 lbm
Scale:
Machine Type: shuttlelor
Drawn: HW 04-12-10
Checked: HW
Part Number: 4029012
Size: E
Sheet: 1 of 2

HTT
Harsco Track Technologies
Harsco
Columbia, SC

Plotted by hwiggins on 9/9/2010 4029012.dft

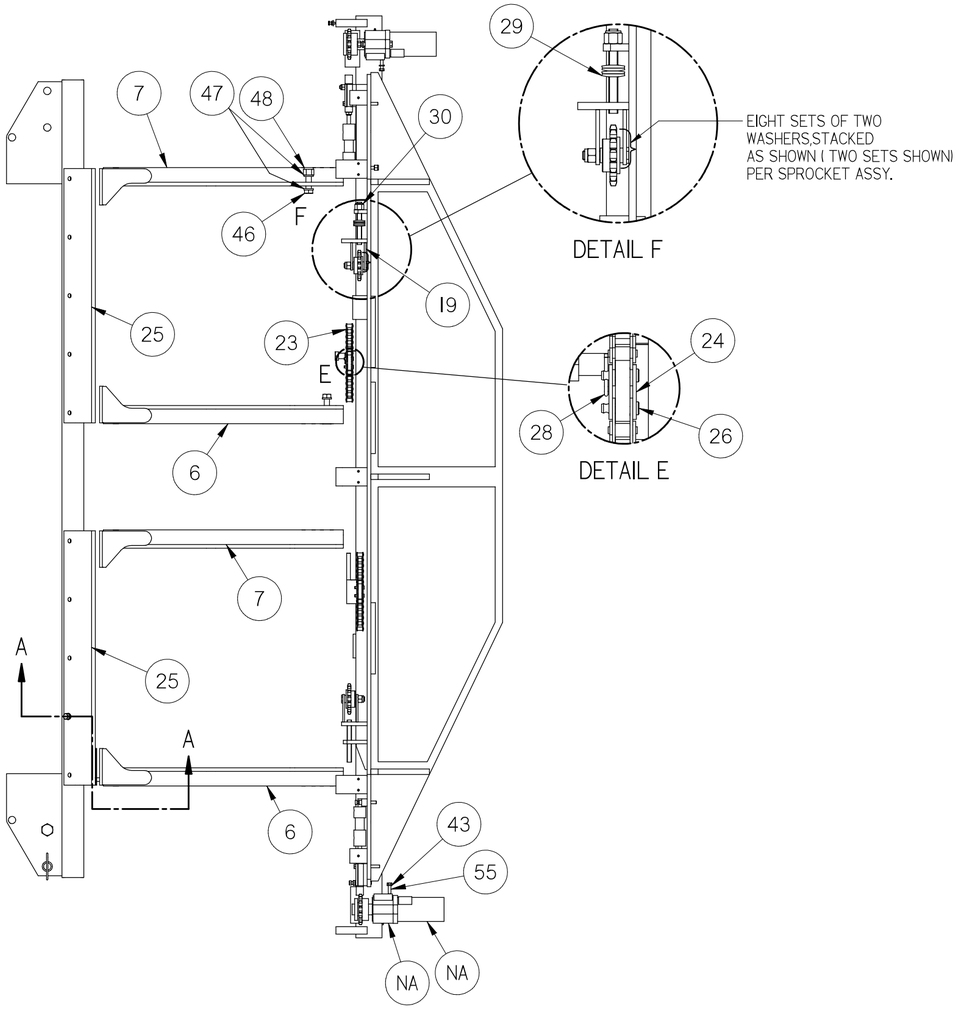

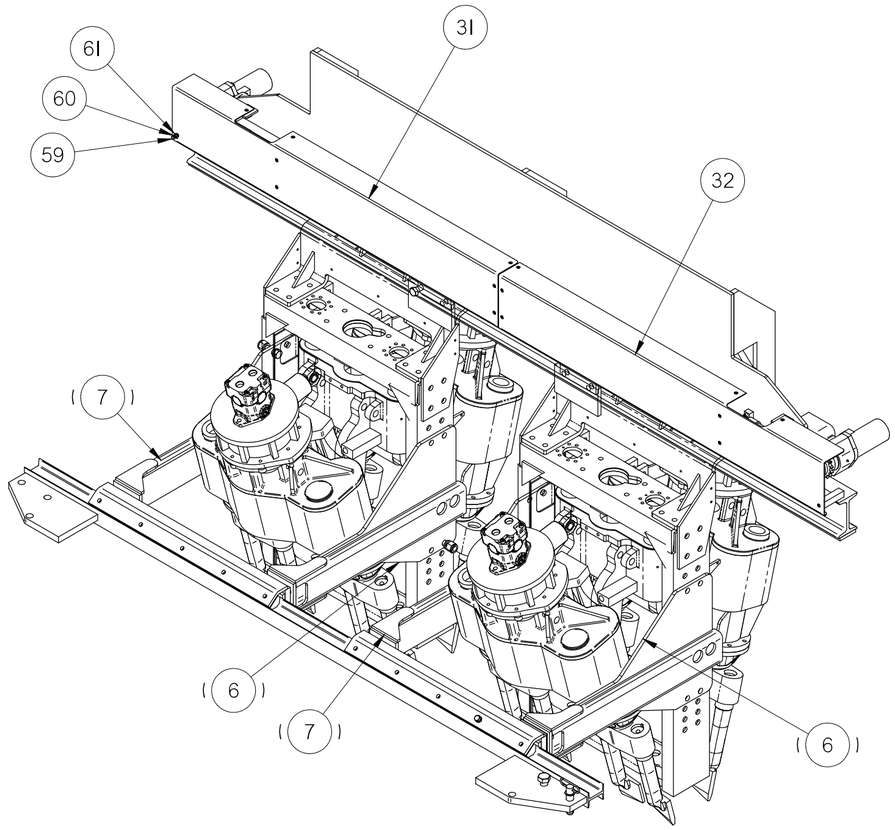

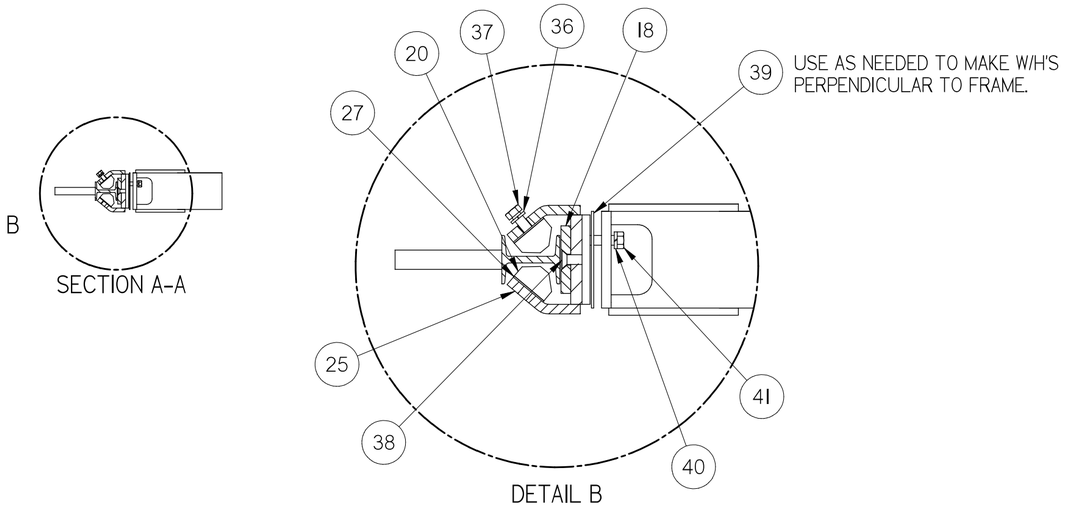

CONFIDENTIAL

© COPYRIGHT 2001 HARSCO TRACK TECHNOLOGIES. THIS DRAWING OR DOCUMENT IS THE PROPERTY OF HARSCO TRACK TECHNOLOGIES AND EMBODIES CONFIDENTIAL INFORMATION, TRADE SECRET INFORMATION, AND/OR KNOW-HOW THAT IS THE PROPERTY OF HARSCO TRACK TECHNOLOGIES. BY ACCEPTING THIS DRAWING OR DOCUMENT, THE RECIPIENT AGREES (1) NOT TO PROVIDE, OR OTHERWISE MAKE AVAILABLE, THE DRAWING OR DOCUMENT, OR ANY INFORMATION OR KNOW-HOW EMBODIED THEREIN, TO ANY THIRD PARTY AND (2) NOT TO REPRODUCE OR USE THE DRAWING OR DOCUMENT TO MANUFACTURE ANY APPARATUS OR DEVICE, WITHOUT THE PRIOR WRITTEN AUTHORIZATION OF HARSCO TRACK TECHNOLOGIES.

SOLID EDGE DRAWING

IMPLIED TOLERANCES

ALL DIMENSIONS ARE IN INCHES - TOLERANCE UNLESS OTHERWISE SPECIFIED

NOMINAL SIZE RANGE OVER	TO	INCH PLUS OR MINUS 2 PLACE DECIMAL	3 PLACE DECIMAL	NOMINAL SIZE RANGE OVER	TO	METRIC PLUS OR MINUS 1 PLACE DECIMAL	2 PLACE DECIMAL
0	6	.03	.005	0	150	.8	.13
6	24	.04	.005	150	600	1.0	.20
24	-	.06	.010	-	600	1.5	.25

UNLESS OTHERWISE SPECIFIED ALL SURFACE FINISH OF 125 MICROINCHES
ANGULAR TOLERANCE OF ±0°
CONCENTRICITY WITHIN .010

THIRD ANGLE PROJECTION

UNLESS OTHERWISE SPECIFIED ALL WELDS SHOULD ADHERE TO THE LATEST HTT WELDING SPECIFICATION 101

CHANGE	R/L	REVISION	DATE
105417	A	RELEASE	04-12-10
105821	B	ITEM 6 WAS CD698VAA & ITEM 7 WAS CD698VAB	06-30-10
105949	C	DEL ITS 1 WAS X71106A, 34 WAS 0-362402I-0-01 & 35 WAS L41I545	07-15-10

Description: TRAVERSING ASSEMBLY, W/H INSTL

Drawing Number: — TRAVERSING ASSEMBLY, W/H INSTL

Model: 4029012.asm

Weight: 0.0 lbm

Scale:

Mark: - -

Machine Type: shuttlestar

Drawn: 04-12-10 DWG Eng HW DWG Chkg HW

HTT
Harsco Track Technologies
Harsco Columbia, SC

Part Number: 4029012

Size: E

Sheet: 2 of 2

Plotted by hwiggins on 9/9/2010 4029012.dft

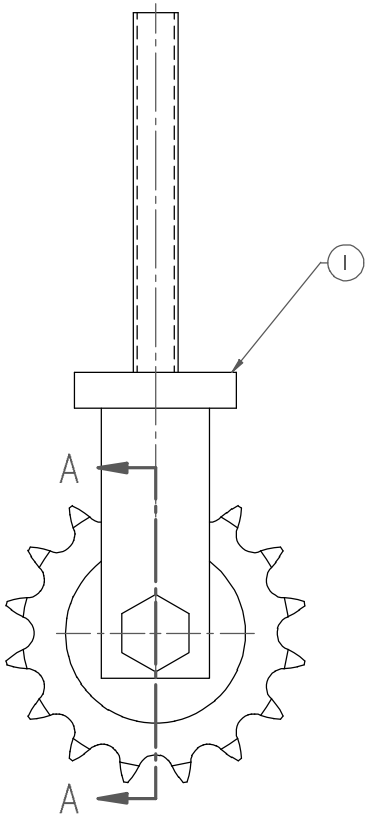

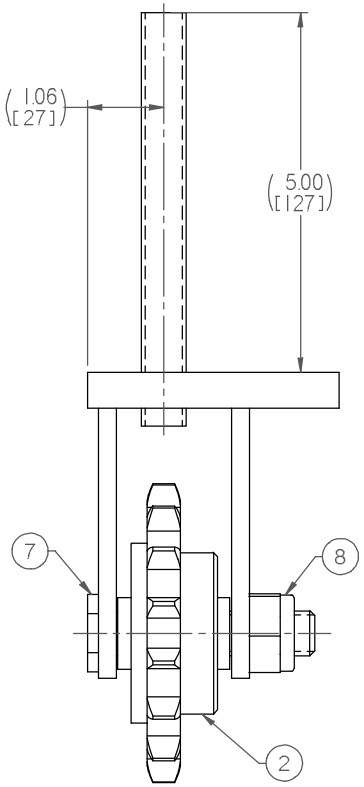

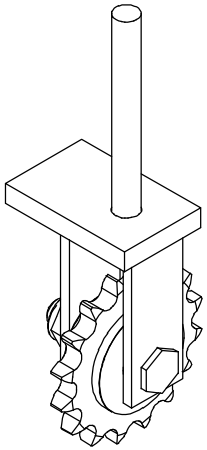

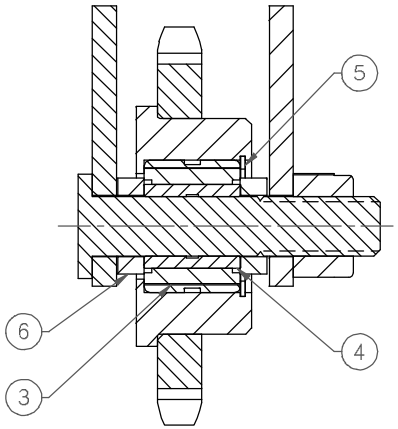

SECTION A-A

ITEM	PART NO	DESCRIPTION	QTY
1	A4877XAA	IDLER CARRIER WELDMENT	1
2	Y710047	CHAIN TENSION BRKT	1
3	L420297	BEARING	1
4	L420399	INNER RING	1
5	L40024	SNAP RING INT.	1
6	A0215T17	SPACER	2
7	A4881Y01	AXLE, IDLER	1
8	L41032	LOCKNUT, 5/8, HEX, HEAVY, THIN	1

Inch
[mm]

SOLID EDGE DRAWING

CONFIDENTIAL

©COPYRIGHT 2009 HARSCO. THIS DRAWING OR DOCUMENT IS THE PROPERTY OF HARSCO AND EMBODIES CONFIDENTIAL INFORMATION, TRADE SECRET INFORMATION, AND/OR KNOW-HOW THAT IS THE PROPERTY OF HARSCO. BY ACCEPTING THIS DRAWING OR DOCUMENT, THE RECIPIENT AGREES (1) NOT TO PROVIDE, OR OTHERWISE MAKE AVAILABLE, THE DRAWING OR DOCUMENT, OR ANY INFORMATION OR KNOW-HOW EMBODIED THEREIN, TO ANY THIRD PARTY AND (2) NOT TO REPRODUCE OR USE THE DRAWING OR DOCUMENT TO MANUFACTURE ANY APPARATUS OR DEVICE, WITHOUT THE PRIOR WRITTEN AUTHORIZATION OF HARSCO.

IMPLIED TOLERANCES
ALL DIMENSIONS ARE IN INCHES - TOLERANCE UNLESS OTHERWISE SPECIFIED

NOMINAL SIZE RANGE		INCH PLUS OR MINUS		NOMINAL SIZE RANGE		METRIC PLUS OR MINUS	
OVER	TO	2 PLACE DECIMAL	3 PLACE DECIMAL	OVER	TO	1 PLACE DECIMAL	2 PLACE DECIMAL
0	6	.03	.005	0	150	.8	.13
6	24	.04	.006	150	600	1.0	.20
24	-	.06	.010	600	-	1.5	.25

UNLESS OTHERWISE SPECIFIED ALL MACHINED SURFACES WILL HAVE; A SURFACE FINISH OF 125 MICROINCHES ANGULAR TOLERANCE OF ±.50° CONCENTRICITY WITHIN .010

THIRD ANGLE PROJECTION

UNLESS OTHERWISE SPECIFIED, ALL WELDS SHOULD ADHERE TO THE MOST CURRENT A.W.S WELDING STANDARDS

CHANGE	R/L	REVISION	DATE
ECN-XXXX	B	SE-DRAFT VERSION CREATED	10-25-10

Description: IDLER, TRAVERSE
Drawing Number: ------
Machine Type: MARK IV
Model: A4887XAA.asm
Drawn: shol
Date Drawn: 25 Oct 10
Weight: Error: No reference
Scale: 1:2
APVD Dwg: BPA
APVD ChEng: HW
Mat'l

HARSCO RAIL

Part Number: A4887XAA
Size: C
Sheet: 1 of 1

Plotted by shol on 2/24/2011 A4887XAA.dft

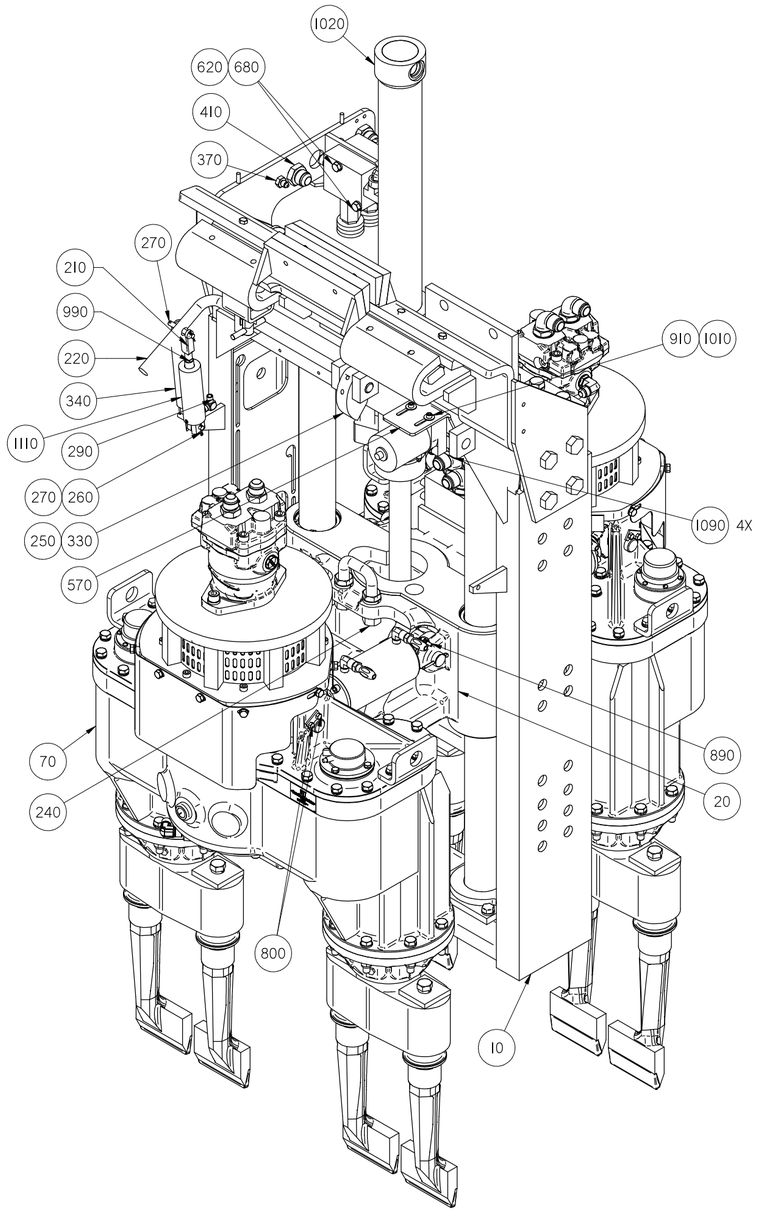

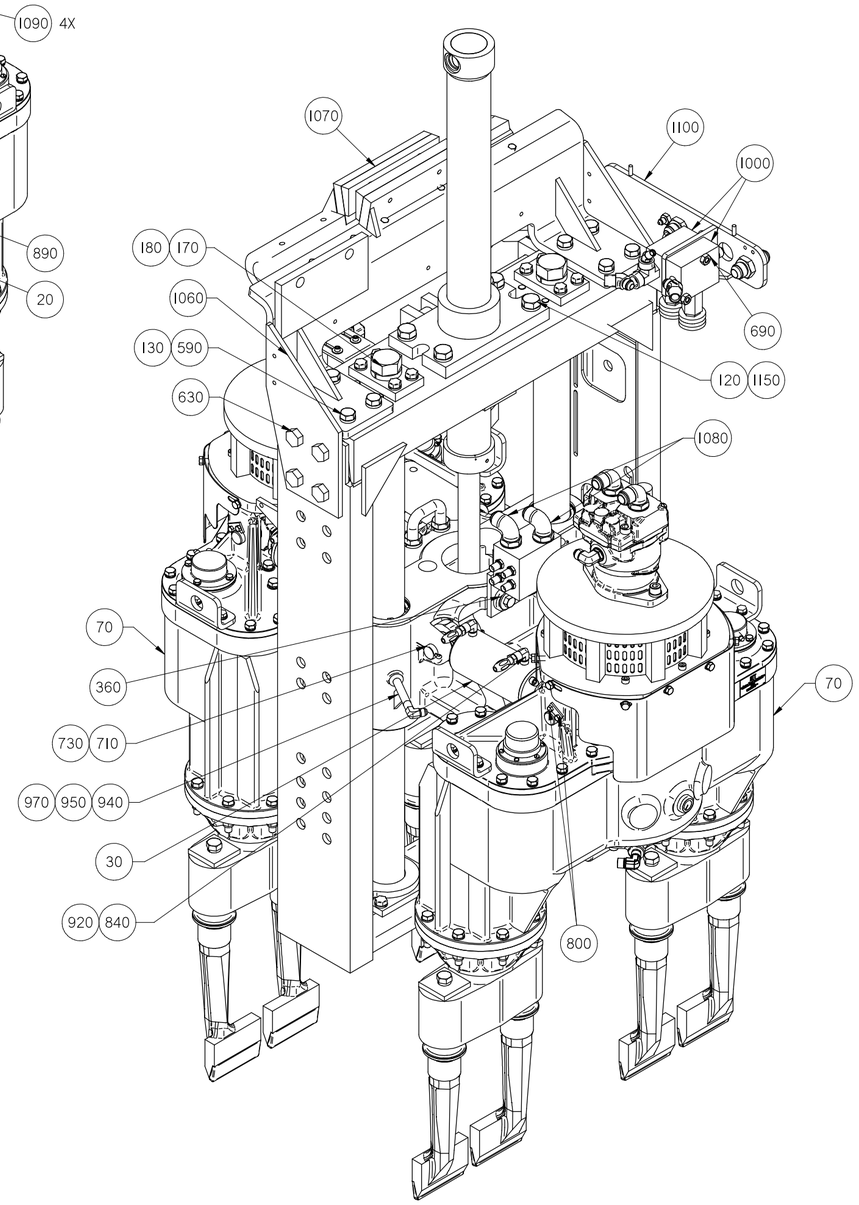

ITEM	PART NO	QTY	DESCRIPTION
660	F010692	1	DC-TEE 8FPTX8NPTX8FPT
670	L40070	4	O-RING
680	F002721	2	DC-HEX HD CAP SCR 3/8-16X3 3/4
690	A0055012	2	3/8-16 HEX NUTS
700	F013588	6	DC-1/4-20 ELAS STP NUT
710	Z68439-01	4	PIN
720	L40072	4	RING RETAINING
730	F002657	8	DC-COTTER PIN 3/16 X 1 3/4
740	Z68288-01	2	BUSHING
750	0-3304098-0-23	1	FTG 1/2 MP 1/4 JIC 45DEG
760	F001050	12	DC-WROUGHT WASHER #10(.190)
770	Z68287	4	VIBRATOR CARRIER BUSHING
780	A0050062	6	10-24X2 1/4 RDHD MSCR CP
790	F018029K	7	#10-24 ELASTIC STOP NUT
800	A0043031	8	1/4-20X1/2 SOCHDSCRNLOK
810*	0-3137013-0-14	1	STG POT 30".024 10K + M12
820*	C6100T69	1	EYE 1/4"
830	B3020Y01	2	HOSE SUPPORT
840	F010988	8	ELB90 6X4NPT
850	Z68373B	10	SHIM, WORK HEAD GUIDE ROD
860	Z68373A	6	SHIM, WORK HEAD GUIDE ROD
870	L422320	4	HOSE CLAMP
880	F004606	6	DC-1/4-20 ELASTIC STOP NUT
890	F016227	1	DC-#10-24 X 1 RD HD MS
910	A0041057	2	1/4-20X2.75 SOC HD C SCR
920	L411363	8	SWIVEL, -6JIC HOSE END
930	F010994	8	DC-STR 6X4 NPT
940	A1438T68	2	THREADED PIPE
950	Z685524	2	GUSSET
960	F013701	2	DC-ELB90 8X8 SAE
970	L41121	2	BLACK PIPE ELBOW
980	F014253	2	DC-STR 12X12SAE
990	A0056004	1	5/16-24 HEX JAM NUTS USE
1000	0-3335012-0-01	2	FLOW REGULATOR
1010	F001106	6	DC-WROUGHT WASHER 1/4 Z.P. *
1020	B5761XAA	1	2 1/2" HYDRAULIC CYLINDER ASSY.
1030	F001213	2	DC-HEX HD CAP SCR 1/4 - 20X1 1
1040	Y684448-01	2	SWIVEL BRACKET ASSY
1060	A1176VAA	1	WH SUPPORT
1070	G0850YAA	2	STOP PAD ASSEMBLY
1080	F016887	4	ELBOW 90 DEGREE **
1090	F021674	4	SOCKET HEAD CAP SCREW
1100	D6931YAB	1	BRACKET, VALVE & HOSE MTG
1110	Y767203-001	1	AIR CYLINDER
1120	H3948Y05	4	DISC LOCK WASHER
1130	Y766772Y	1	MANIFOLD ASSY
1140	Z682674	16	SPACER
1150	A0061024	8	3/4 HVY LOCKWASHER
1160	Z68440-02	4	PIN CONN

ITEM	PART NO	QTY	DESCRIPTION
10	A5287VAA	1	FRAME, WORKHEAD
20	0-2100706-0-01	1	VIBRATOR CARRIER MACHINING
30	X68297	4	SQUEEZE CYLINDER
40	5007907	2	PIVOT PIN ASSY
50	G0851YAA	1	REAR SLIDE ASSEMBLY
60	G0852YAA	1	FRONT SLIDE ASSEMBLY
70	C0607VAA	2	VIBRATOR ASSEMBLY
80	Y688545	2	GUIDE ROD LOCK-UP PLATE
90	0-1404016-0-01	2	GUIDE ROD
100	5007782	2	PIVOT PIN
110	5007872	2	ANTI-ROTATION KEEPER
120	F020458	4	HEX HD CS 3/4-10 X 2 1/2 GR8 Z
130	A0061017	8	5/8 HEAVY LOK WSHR
140	Z688521	4	LOCK PLATE
150	F004252	4	DC-ZERK STR X 02NPT
160	0-1404015-0-01	2	ADJUSTING PLATE(LOWER)
170	L420984	4	1 1/4-12 X 3 FULL THD HEX HD.
180	A0061021	4	1 1/4 HEAVY LOK WSHR
190	A0036123	24	1/2-13 X1 1/2 HHCS USE F001090
200	A0061013	24	1/2 MED LOK WSHR
210	F003114	1	ADJ YOKE END
220	0-1302117-0-01	1	LOCK LEVER HANDLE (JRE)
230	F001442	2	DC-HEX HD CAP SCR 1/2-13X2 GR5
240	F013695	2	DC-HEX NUT 3/4-10 GR5 ZP
250*	L40416	1	ROLL PIN (1 3/8)
260	F001076	4	3/32 X 3/4 COTTER PIN
270	Z753164-001	2	PIN
280	Z68370	2	UPPER PLATE
290	F010677	1	DC-MALE ELB90 4X2NPT *
300	Z68133-02	1	U- BOLT WH
310	F003400	2	HEX JAM NUT 3/4-10 GR2 ZP
320	0-1404046-1-01	1	RETAINING PLATE
330	0-1405505-0-01	1	HOOK FOR WK/HA LOCK
340	L410848	1	SPRING
350	Y68375-01	2	PAD, LOWER CUSHION
360	Z766673-001	2	SHOCK MOUNT
370	F020452	1	DC-STR 4X4 BH
380	D8009Y01	4	BUMPER BOLT HEAD
390	D8010Y01	4	BUMPER THREADED ROD
400	0-1404045-1-01	1	CUSHION MOUNT
410	F040408	2	DC-STR 12X12 BH
420	F001267	4	DC-WROUGHT WASHER 1/2 ZP
430*	A0068025	4	3/16 X 2 COTTER PIN USE
440	5007905	4	1/2-13 UNC X 1-1/2" HEX HEAD BOLT
450	F001506	4	HEX JAM NUT 1"-8 GR2 ZP
460	0-1404047-1-01	1	SPACER
470	0-1404575-1-01	1	LOWER RETAINING PLATE
480	0-3015001-0-35	1	PIN-DOWEL
490	0-1404574-1-01	1	LOWER CUSHION MOUNT
500	0-3015001-0-13	1	PIN-DOWEL
510	Z710103	1	COMPRESSION SPRING
520	F002929	1	DC-SAE WASHER 3/4 ZP *
530	L424662	1	LOCKNUT
540	C9402Y01	1	LOCK-UP PIN
550	L41005	1	PIN ROLL
560	Z68373C	2	SHIM, WORK HEAD GUIDE ROD
570	G2801X01	1	POTENTIOMETER MTG BRKT
580	F012027	2	DC-STR 8X8NPT
590	F005192	8	DC-HEX HD CAP SCR 5/8-11X1 3/4
600	L40110	8	PIN ROLL (1 1/2)
610*	F013856	4	DC-ELB45 8X8NPT
620	A0061011	2	3/8 HEAVY LOK WSHR
630	A0036219	8	3/4-10 X 2 1/4 CAPSCREW
640	L40525	4	WIPER RING
650	L41003	8	3/4-10 LOCKNUT PLATED

FOR MARK IV AND MARK VI

#STANDARD SQUEEZE CYLINDER
#STANDARD VIBRATOR CARRIER
#VARIABLE DEPTH W/H CONTROL

CONFIDENTIAL
© COPYRIGHT 2011 HARSCO. THIS DRAWING OR DOCUMENT IS THE PROPERTY OF HARSCO AND EMBODIES CONFIDENTIAL INFORMATION, TRADE SECRET INFORMATION, AND/OR KNOW-HOW THAT IS THE PROPERTY OF HARSCO. BY ACCEPTING THIS DRAWING OR DOCUMENT, THE RECIPIENT AGREES (1) NOT TO PROVIDE, OR OTHERWISE MAKE AVAILABLE, THE DRAWING OR DOCUMENT, OR ANY INFORMATION OR KNOW-HOW EMBODIED THEREIN, TO ANY THIRD PARTY AND (2) NOT TO REPRODUCE OR USE THE DRAWING OR DOCUMENT TO MANUFACTURE ANY APPARATUS OR DEVICE, WITHOUT THE PRIOR WRITTEN AUTHORIZATION OF HARSCO.

DECIMAL PLACES OVER	TO	INCH PLUS OR MINUS ±1 PLACE DECIMAL	±2 PLACE DECIMAL	DECIMAL PLACES OVER	TO	METRIC PLUS OR MINUS ±1 PLACE DECIMAL	±2 PLACE DECIMAL
0	6	.03	.005	0	100	.8	.13
6	24	.04	.005	100	600	1.0	.20
24	-	.06	.010	600	-	1.5	.25

UNLESS OTHERWISE SHOWN ALL MACHINED SURFACES ARE 125 RMS
A SURFACE FINISH OF 125 MICROINCHES AND/OR TOLERANCE OF .08" CONCENTRICITY WITHIN .010

THIRD ANGLE PROJECTION

UNLESS OTHERWISE SPECIFIED, ALL WELDS SHOULD ADHERE TO THE MOST CURRENT A.W.S WELDING STANDARDS

CHANGE	R/L	REVISION	DR	DATE
EC501000	A	NEW RELEASE	SRK	04-28-11

Description: VIBRATOR AND WORKHEAD ASSY RH
HARSCO RAIL
Material: --; --
Machine Type: MARK IV
Weight: 2853.4 lbm
Drawn: skumar
Date Drawn: 5/16/2011
Part Number: 5007870
Size: E
Sheet: 1 of 4
SOLID EDGE DRAWING
DO NOT SCALE

Inch
[mm]

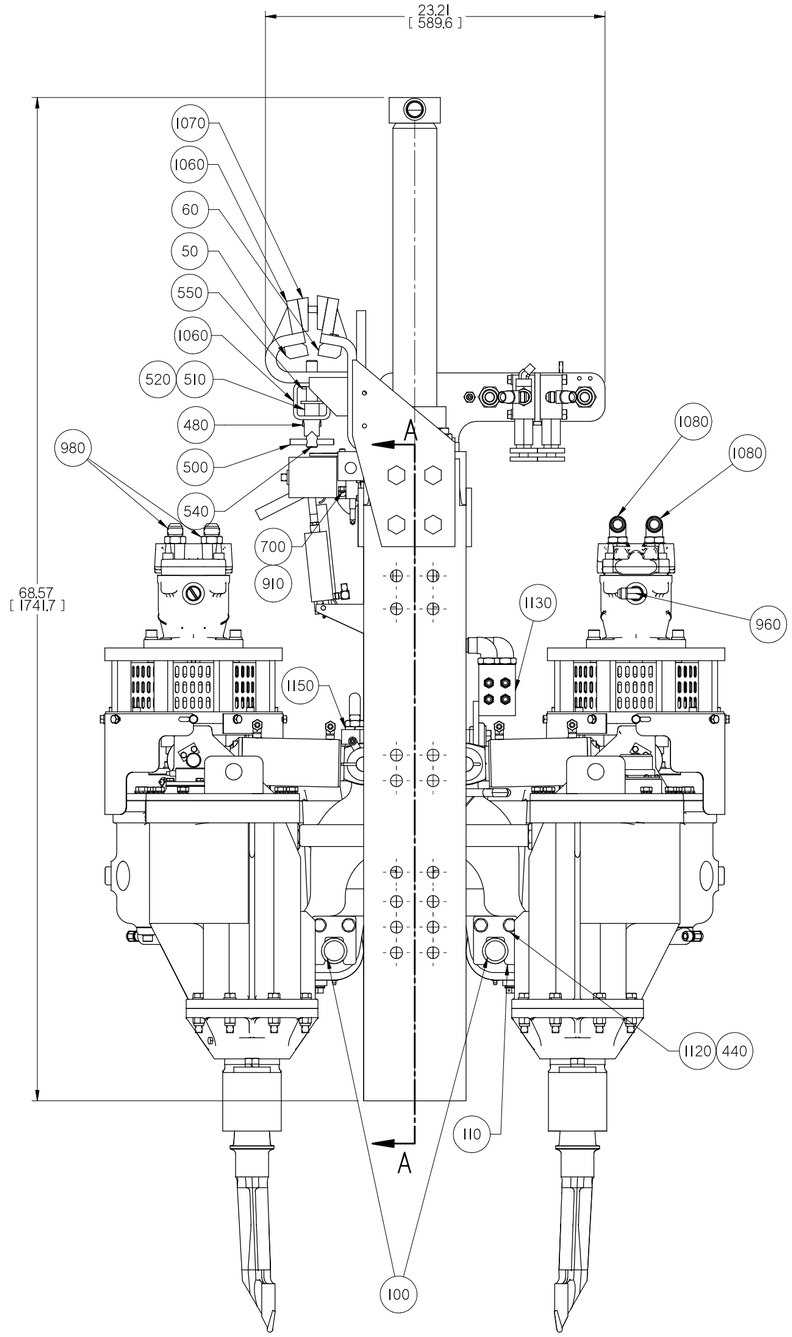

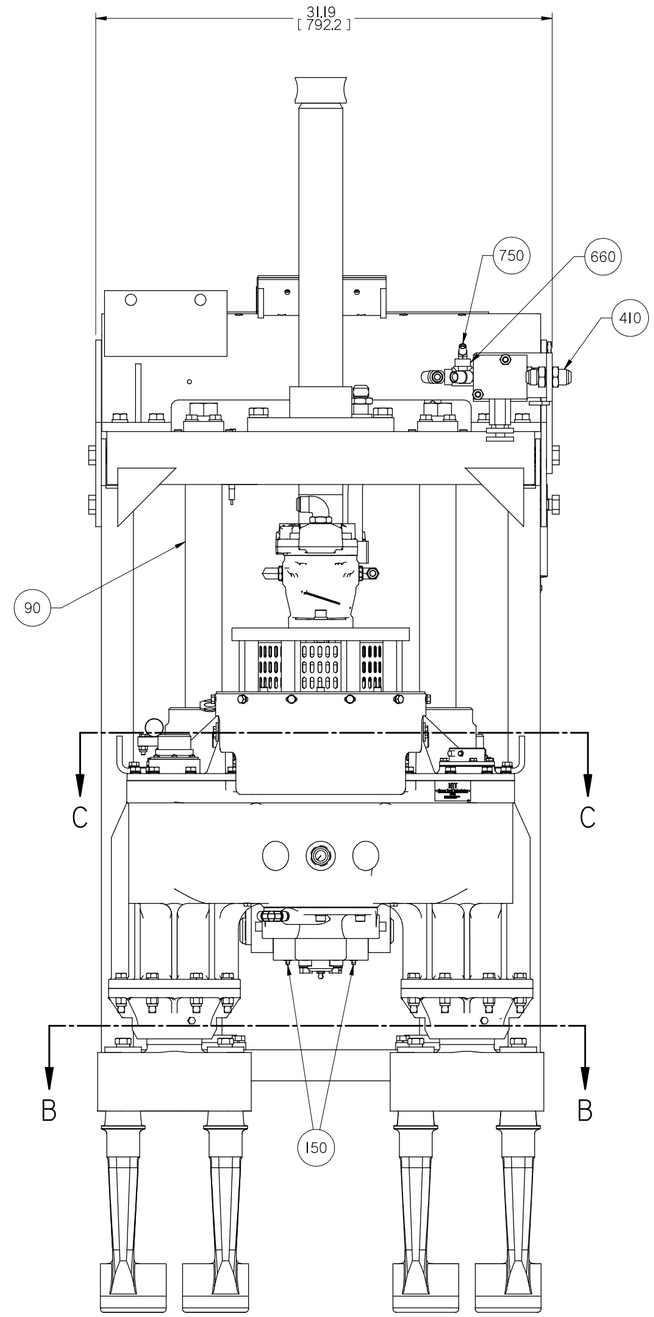

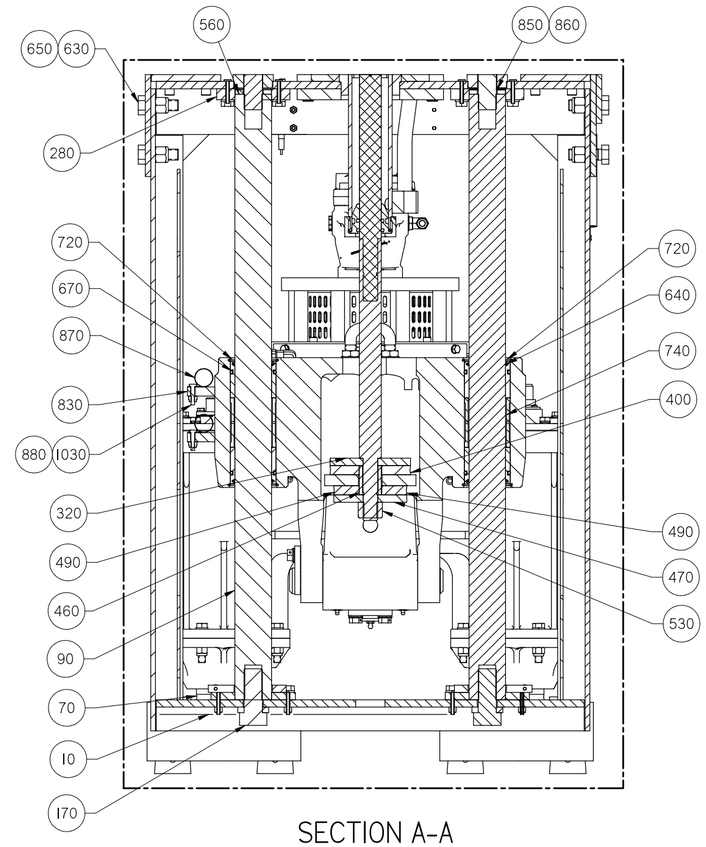

SECTION A-A

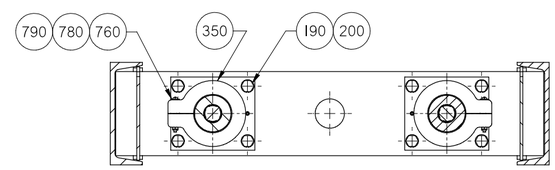

SECTION B-B

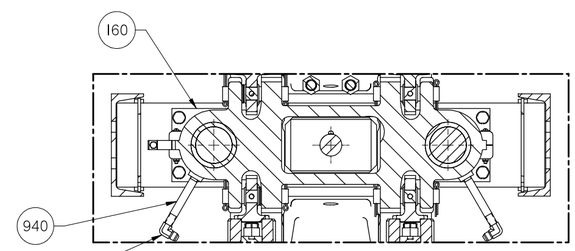

SECTION C-C

Inch
[mm]

CONFIDENTIAL
© COPYRIGHT 2011 HARSCO. THIS DRAWING OR DOCUMENT IS THE PROPERTY OF HARSCO AND EMBODIES CONFIDENTIAL INFORMATION, TRADE SECRET INFORMATION, AND/OR KNOW-HOW THAT IS THE PROPERTY OF HARSCO. BY ACCEPTING THIS DRAWING OR DOCUMENT, THE RECIPIENT AGREES (1) NOT TO PROVIDE, OR OTHERWISE MAKE AVAILABLE, THE DRAWING OR DOCUMENT, OR ANY INFORMATION OR KNOW-HOW EMBODIED THEREIN, TO ANY THIRD PARTY AND (2) NOT TO REPRODUCE OR USE THE DRAWING OR DOCUMENT TO MANUFACTURE ANY APPARATUS OR DEVICE, WITHOUT THE PRIOR WRITTEN AUTHORIZATION OF HARSCO.

NOMINAL SIZE RANGE		INCH PLUS OR MINUS	
OVER	TO	2 PLACE DECIMAL	3 PLACE DECIMAL
0	6	.03	.005
6	24	.04	.005
24	-	.06	.010

NOMINAL SIZE RANGE		METRIC PLUS OR MINUS	
OVER	TO	1 PLACE DECIMAL	2 PLACE DECIMAL
0	150	.8	.13
150	600	1.0	.20
600	-	1.5	.25

UNLESS OTHERWISE SPECIFIED ALL MACHINED SURFACES WILL HAVE A SURFACE FINISH OF 125 MICROINCHES ANGULAR TOLERANCE OF ±0° CONCENTRICITY WITHIN .010

THIRD ANGLE PROJECTION

UNLESS OTHERWISE SPECIFIED, ALL WELDS SHOULD ADHERE TO THE MOST CURRENT A.W.S WELDING STANDARDS

CHANGE	R/L	REVISION	DR	DATE
EC501000	A	NEW RELEASE	SRK	04-26-11

Description: VIBRATOR AND WORKHEAD ASSY RH

HARSCO RAIL

Material: –; –

Machine Type: MARK IV

Size: E

Weight: 2853.4 lbm

Drawn: skumar

Date Drawn: 5/16/2011

Part Number: 5007870

Sheet: 2 of 4

SOLID EDGE DRAWING

DO NOT SCALE

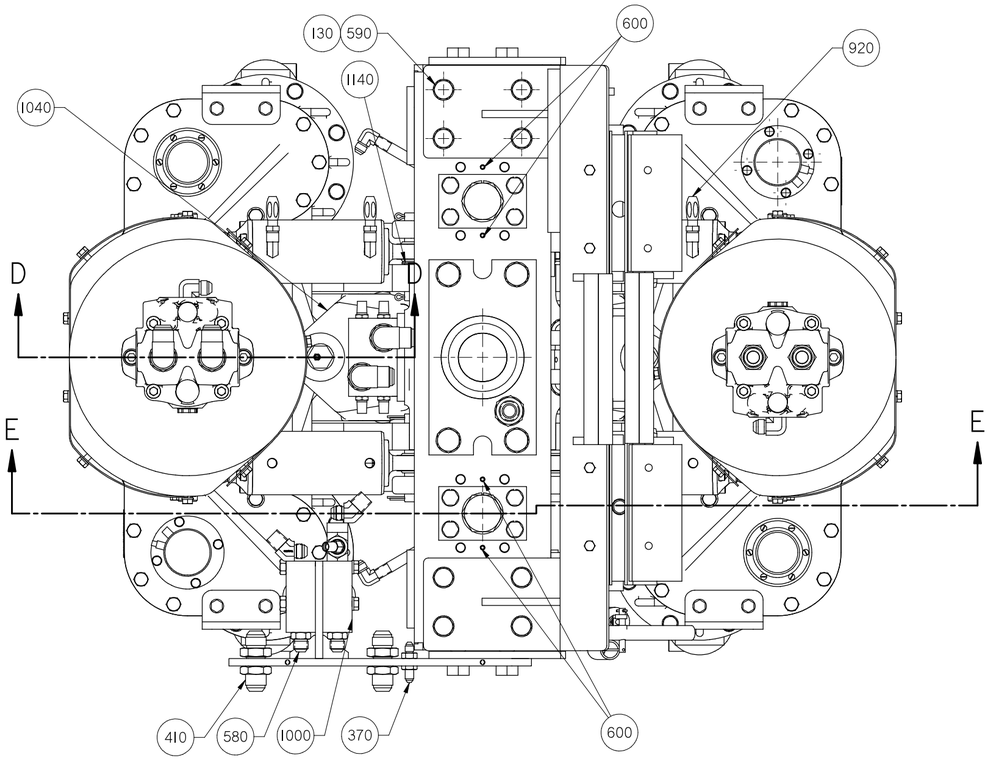

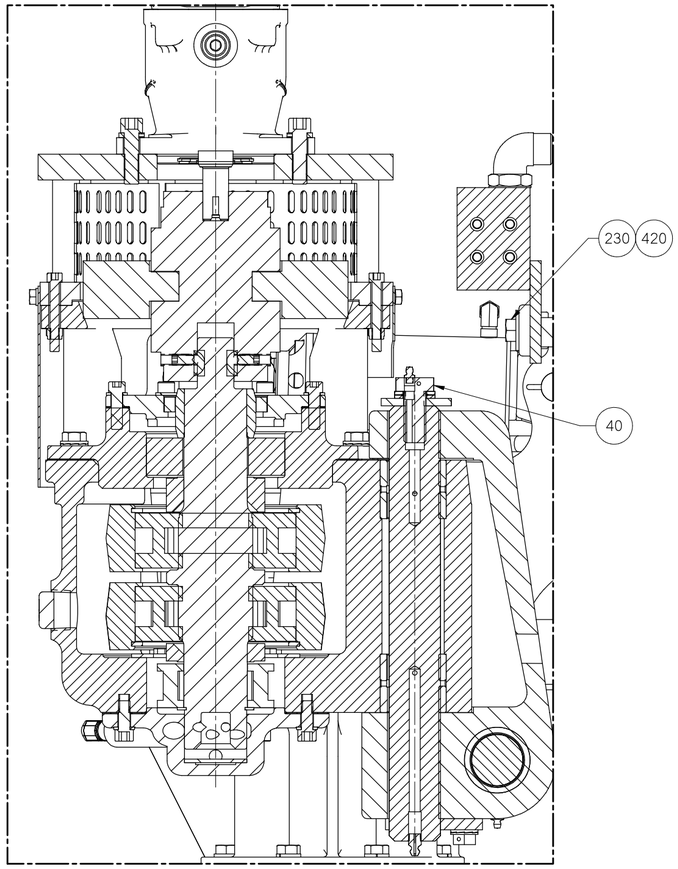

SECTION D-D

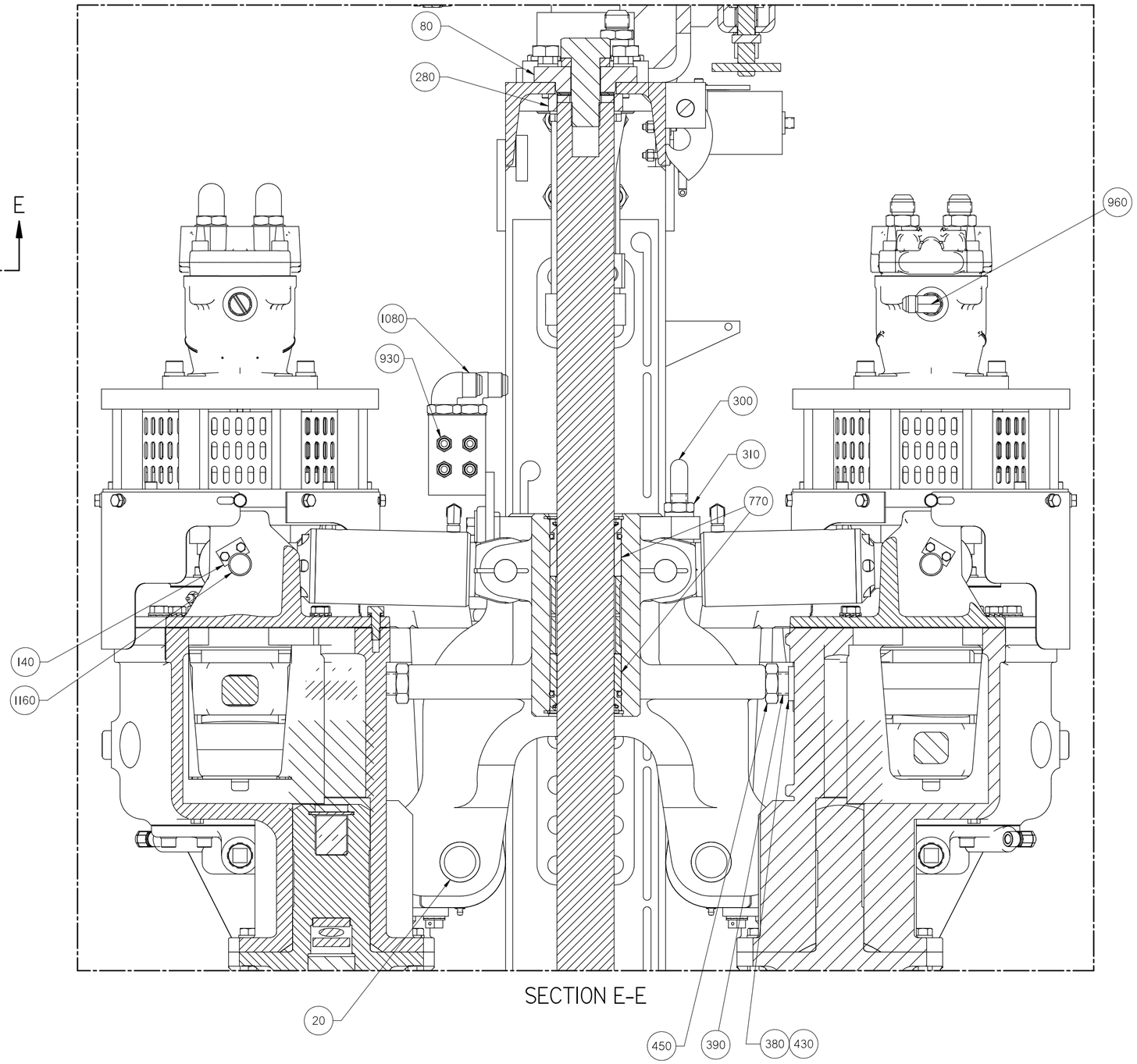

SECTION E-E

CONFIDENTIAL
© COPYRIGHT 2011 HARSCO. THIS DRAWING OR DOCUMENT IS THE PROPERTY OF HARSCO AND EMBODIES CONFIDENTIAL INFORMATION, TRADE SECRET INFORMATION, AND/OR KNOW-HOW THAT IS THE PROPERTY OF HARSCO. BY ACCEPTING THIS DRAWING OR DOCUMENT, THE RECIPIENT AGREES (1) NOT TO PROVIDE, OR OTHERWISE MAKE AVAILABLE, THE DRAWING OR DOCUMENT, OR ANY INFORMATION OR KNOW-HOW EMBODIED THEREIN, TO ANY THIRD PARTY AND (2) NOT TO REPRODUCE OR USE THE DRAWING OR DOCUMENT TO MANUFACTURE ANY APPARATUS OR DEVICE, WITHOUT THE PRIOR WRITTEN AUTHORIZATION OF HARSCO.

NOMINAL MEASUREMENT OVER	TO	INCH PLUS OR MINUS EN-ACHE DECIMAL	EN-ACHE DECIMAL	NOMINAL MEASUREMENT OVER	TO	METRIC PLUS OR MINUS EN-ACHE DECIMAL	EN-ACHE DECIMAL
0	6	.03	.005	0	150	.8	.13
6	24	.04	.005	150	600	1.0	.30
24	-	.06	.010	600	-	1.5	.35

UNLESS OTHERWISE SPECIFIED ALL MACHINED SURFACES WILL HAVE:
A SURFACE FINISH OF 125 MICROINCHES
ANGULAR TOLERANCE OF ±0°
CONCENTRICITY WITHIN .010

THIRD ANGLE PROJECTION

UNLESS OTHERWISE SPECIFIED, ALL WELDS SHOULD ADHERE TO THE MOST CURRENT A.W.S WELDING STANDARDS

CHANGE	R/L	REVISION	DR	DATE
EC501000	A	NEW RELEASE	SRK	04-28-11

Description: VIBRATOR AND WORKHEAD ASSY RH

HARSCO RAIL

Material: –; –

Machine Type: MARK IV

Size: E

Weight: 2853.4 lbm

Drawn: skumar

Date Drawn: 5/16/2011

Part Number: 5007870

Sheet: 3 of 4

SOLID EDGE DRAWING

DO NOT SCALE

Inch [mm]

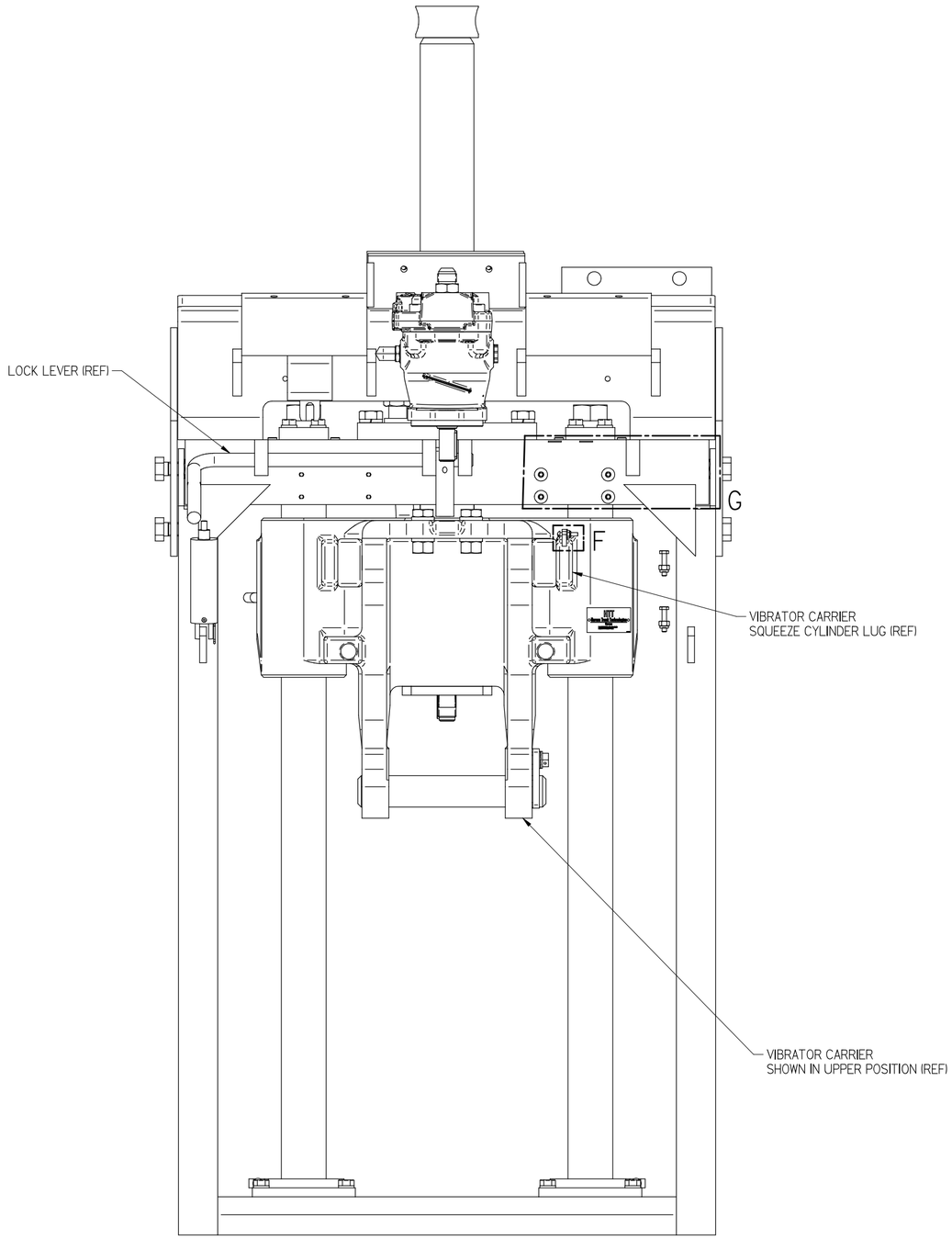

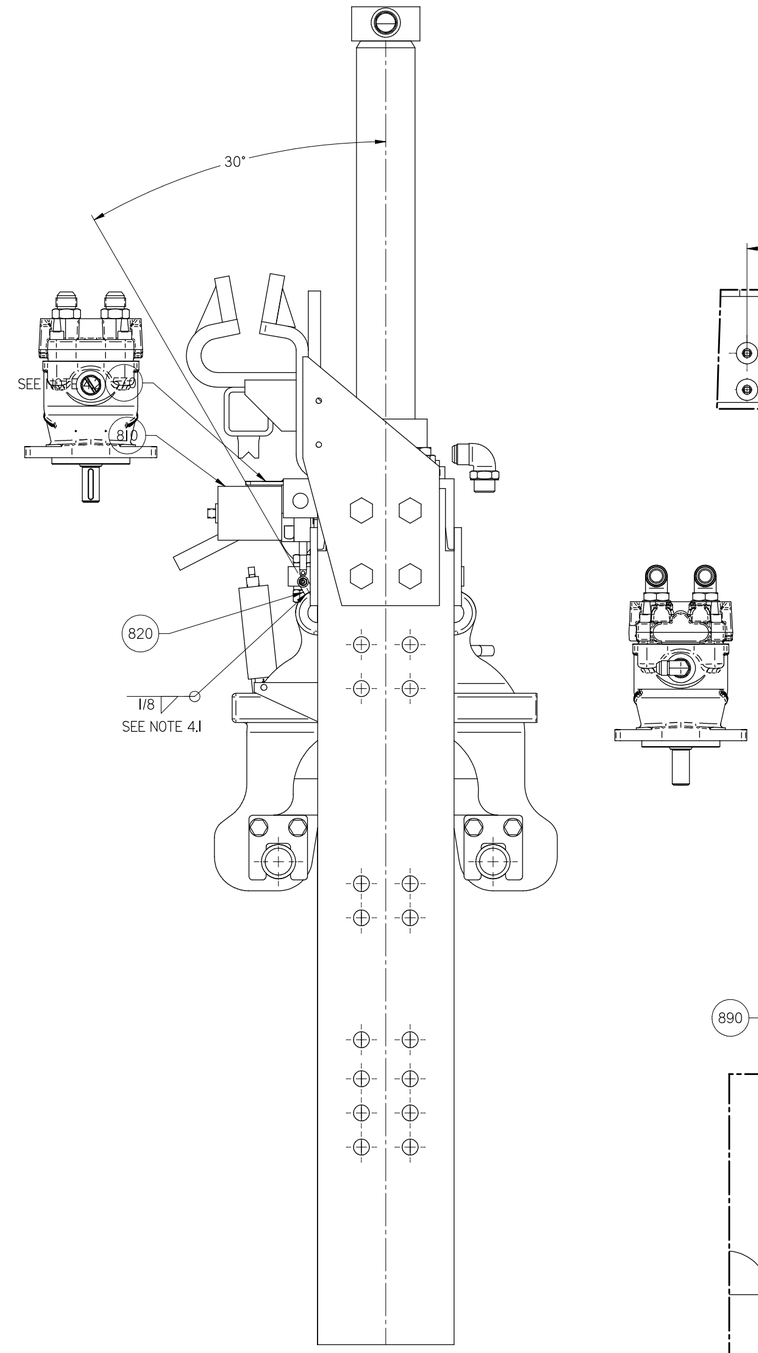

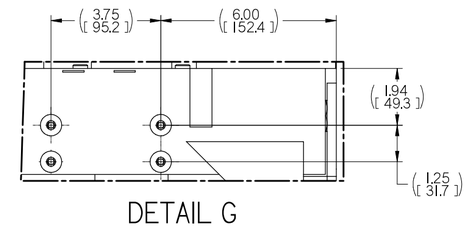

DETAIL G

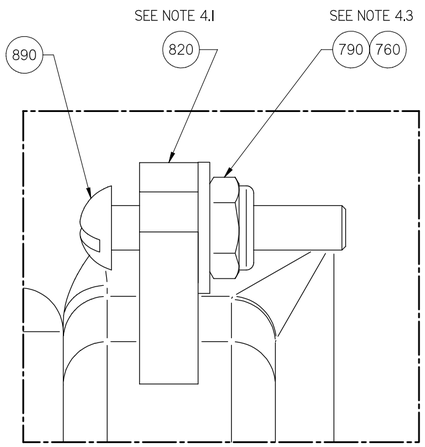

DETAIL F

NOTES:

4.1. ITEM# 820 (EYE) SHOULD BE LOCATED AT 30° AS SHOWN ON VIBRATOR CARRIER SQUEEZE CYLINDER LUG ,OPPOSITE SIDE FROM LOCKING LEVER. WELD AS INDICATED,CENTERED ON VIBRATOR CARRIER SQUEEZE CYLINDER LUG.

4.2. ITEM# 810 (POTENTIOMETER) & 570 (POTENTIOMETER MTG BKT)SHOULD BE ADJUSTED IN BOTH DIRECTIONS BY USING SLOTS IN ITEM# 570,TO ENSURE THAT THE MEASURING LINE OF ITEM# 810 IS INLINE WITH ITEM# 820 (EYE) & RD HD SCREW ITEM# 890 & 790.

4.3. DO NOT TIGHTEN ITEM# 790 (LOCKNUT) COMPLETELY.STRING POTENTIOMETER CABLE MUST BE FREE TO ROTATE.

CONFIDENTIAL
© COPYRIGHT 2011 HARSCO. THIS DRAWING OR DOCUMENT IS THE PROPERTY OF HARSCO AND EMBODIES CONFIDENTIAL INFORMATION, TRADE SECRET INFORMATION, AND/OR KNOW-HOW THAT IS THE PROPERTY OF HARSCO. BY ACCEPTING THIS DRAWING OR DOCUMENT, THE RECIPIENT AGREES (1) NOT TO PROVIDE, OR OTHERWISE MAKE AVAILABLE, THE DRAWING OR DOCUMENT, OR ANY INFORMATION OR KNOW-HOW EMBODIED THEREIN, TO ANY THIRD PARTY AND (2) NOT TO REPRODUCE OR USE THE DRAWING OR DOCUMENT TO MANUFACTURE ANY APPARATUS OR DEVICE, WITHOUT THE PRIOR WRITTEN AUTHORIZATION OF HARSCO.

NOMINAL MEASUREMENT OVER	TO	INCH PLUS OR MINUS DPLACE DECIMAL	DPLACE DECIMAL
0	6	.03	.005
6	24	.04	.008
24	-	.06	.010

NOMINAL MEASUREMENT OVER	TO	METRIC PLUS OR MINUS DPLACE DECIMAL	DPLACE DECIMAL
0	150	.8	.13
150	600	1.0	.20
600	-	1.5	.25

UNLESS OTHERWISE SPECIFIED ALL MACHINED SURFACES WILL HAVE A SURFACE FINISH OF 125 MICROINCHES ANGULAR TOLERANCE OF .50° CONCENTRICITY WITHIN .010

THIRD ANGLE PROJECTION

UNLESS OTHERWISE SPECIFIED, ALL WELDS SHOULD ADHERE TO THE MOST CURRENT A.W.S WELDING STANDARDS

CHANGE	R/L	REVISION	DR	DATE
EC501000	A	NEW RELEASE	SRK	04-28-11

Inch [mm]

Description: VIBRATOR AND WORKHEAD ASSY RH

HARSCO RAIL

Material: –; –

Machine Type: MARK IV

Size: E

Weight: 2853.4 lbm

Drawn: skumar

Date Drawn: 5/16/2011

Part Number: 5007870

Sheet: 4 of 4

SOLID EDGE DRAWING

DO NOT SCALE

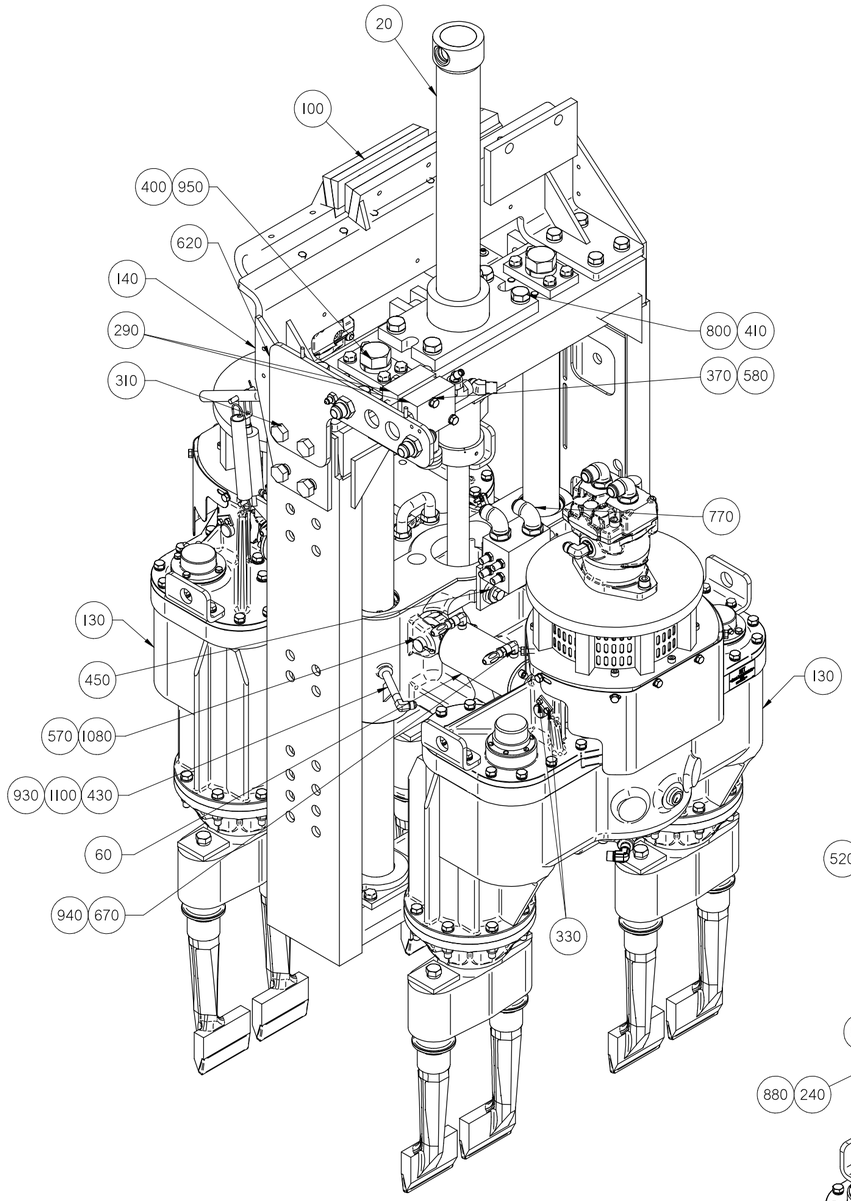

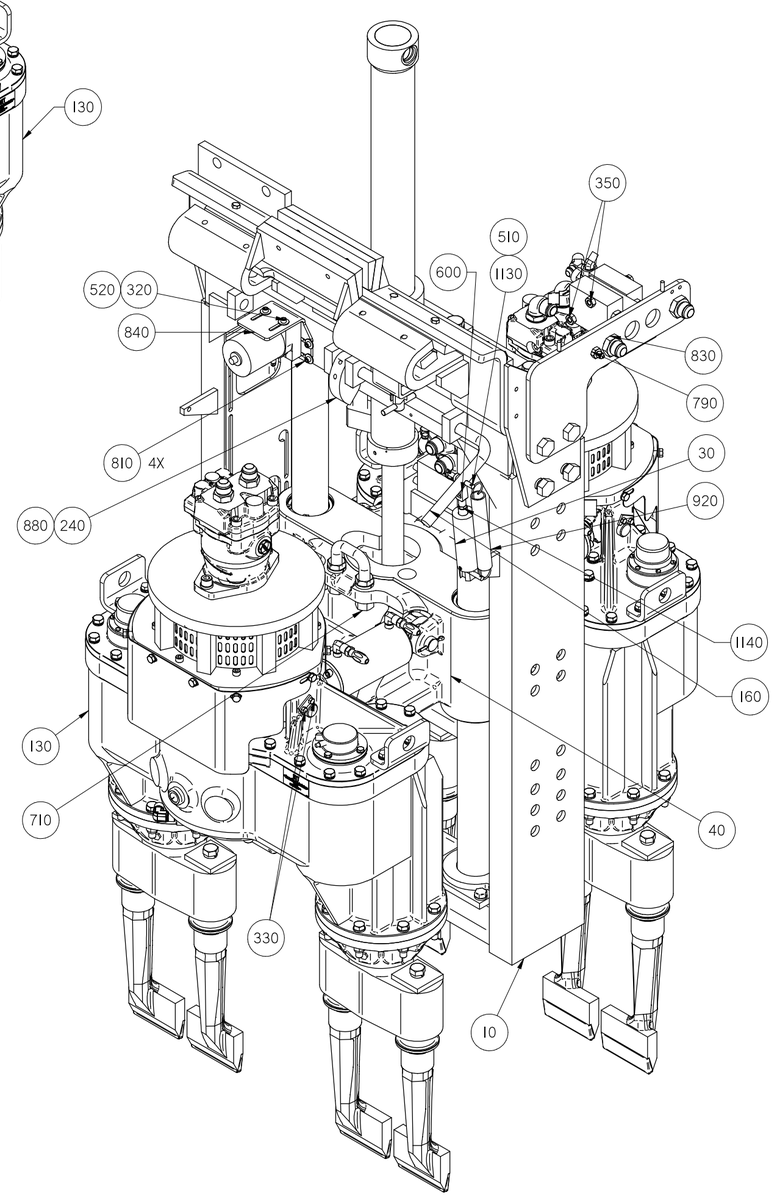

ITEM	PART NO	QTY	DESCRIPTION
760	F016227	1	DC-#10-24 X 1 RD HD MS
770	F016887	4	ELBOW 90 DEGREE "
780	F018029K	7	#10-24 ELASTIC STOP NUT
790	F020452	1	DC-STR 4X4 BH
800	F020458	4	HEX HD CS 3/4-10 X 2 1/2 GR8 Z
810	F021674	4	SOCKET HEAD CAP SCREW
830	F040408	2	DC-STR 12X12 BH
840	G2801X01	1	POTENTIOMETER MTG BRKT
850	L40070	4	O-RING
860	L40072	4	RING RETAINING
870	L40110	8	PIN ROLL (1 1/2)
880	L40416	1	ROLL PIN (1 3/8)
890	L40525	4	WIPER RING
900	L41003	8	3/4-10 LOCKNUT PLATED
910	L41005	1	PIN ROLL
920	L410848	1	SPRING
930	L41121	2	BLACK PIPE ELBOW
940	L411363	8	SWIVEL, -6JIC HOSE END
950	L420984	4	1 1/4-12 X 3 FULL THD HEX HD.
960	L422320	4	HOSE CLAMP
970	L424662	1	LOCKNUT
980	Y68375-01	2	PAD, LOWER CUSHION
990	Y688545	2	GUIDE ROD LOCK-UP PLATE
1000	Z68133-02	1	U- BOLT WH
1010	Z682674	16	SPACER
1020	Z68287	4	VIBRATOR CARRIER BUSHING
1030	Z68288-01	2	BUSHING
1040	Z68370	2	UPPER PLATE
1050	Z68373A	6	SHIM, WORK HEAD GUIDE ROD
1060	Z68373B	10	SHIM, WORK HEAD GUIDE ROD
1070	Z68373C	2	SHIM, WORK HEAD GUIDE ROD
1080	Z68439-01	4	PIN
1090	Z68440-02	4	PIN CONN
1100	Z685524	2	GUSSET
1110	Z688521	4	LOCK PLATE
1120	Z710103	1	COMPRESSION SPRING
1130	Z753164-001	2	PIN
1140	A0056003	1	5/16-18 HEX JAM NUTS
1150	5007782	2	PIVOT PIN
1160	5007872	2	ANTI-ROTATION KEEPER

ITEM	PART NO	QTY	DESCRIPTION
10	A5287VAA	1	FRAME, WORKHEAD
20	B5761XAA	1	2 1/2" HYDRAULIC CYLINDER ASSY.
30	Y767203-001	1	AIR CYLINDER
40	0-2100706-0-01	1	VIBRATOR CARRIER MACHINING
50	Y766772Y	1	MANIFOLD ASSY
60	X68297	4	SQUEEZE CYLINDER
70	5007907	2	PIVOT PIN ASSY
80	Y684448-01	2	SWIVEL BRACKET ASSY
90	H3948Y05	4	DISC LOCK WASHER
100	G0850YAA	2	STOP PAD ASSEMBLY
110	G0851YAA	1	REAR SLIDE ASSEMBLY
120	G0852YAA	1	FRONT SLIDE ASSEMBLY
130	C0607VAA	2	VIBRATOR ASSEMBLY
140	A1176VAB	1	WH SUPPORT
150	F004252	4	DC-ZERK STR X 02NPT
160	0-1302117-0-01	1	LOCK LEVER HANDLE (JRE)
170	0-1404015-0-01	2	ADJUSTING PLATE(LOWER)
180	0-1404016-0-01	2	GUIDE ROD
190	0-1404045-1-01	1	CUSHION MOUNT
200	0-1404046-1-01	1	RETAINING PLATE
210	0-1404047-1-01	1	SPACER
220	0-1404574-1-01	1	LOWER CUSHION MOUNT
230	0-1404575-1-01	1	LOWER RETAINING PLATE
240	0-1405505-0-01	1	HOOK FOR WK/HA LOCK
250	0-3015001-0-13	1	PIN-DOWEL
260	0-3015001-0-35	1	PIN-DOWEL
270	0-3137013-0-14	1	STG POT 30" .024 10K + M12
280	0-3304098-0-23	1	FTG 1/2 MP 1/4 JIC 45DEG
290	0-3335012-0-01	2	FLOW REGULATOR
300	A0036123	24	1/2-13 X1 1/2 HHCS USE F001090
310	A0036219	8	3/4-10 X 2 1/4 CAPSCREW
320	A0041057	2	1/4-20X2.75 SOC HD C SCR
330	A0043031	8	1/4-20X1/2 SOCHDSCRNLOK
340	A0050062	6	10-24X2 1/4 RDHD MSCR CP
350	A0055012	2	3/8-16 HEX NUTS
360	5007905	4	1/2-13 UNC X 1-1/2" HEX HEAD BOLT
370	A0061011	2	3/8 HEAVY LOK WSHR
380	A0061013	24	1/2 MED LOK WSHR
390	A0061017	8	5/8 HEAVY LOK WSHR
400	A0061021	4	1 1/4 HEAVY LOK WSHR
410	A0061024	8	3/4 HVY LOCKWASHER
420	A0068025	4	3/16 X 2 COTTER PIN USE
430	A1438T68	2	THREADED PIPE
440	B3020Y01	2	HOSE SUPPORT
450	Z766673-001	2	SHOCK MOUNT
460	C6100T69	1	EYE 1/4"
470	C9402Y01	1	LOCK-UP PIN
480	D8009Y01	4	BUMPER BOLT HEAD
490	D8010Y01	4	BUMPER THREADED ROD
500	F001050	12	DC-WROUGHT WASHER #10(1990)
510	F001076	4	3/32 X 3/4 COTTER PIN
520	F001106	6	DC-WROUGHT WASHER 1/4 ZP. *
530	F001213	2	DC-HEX HD CAP SCR 1/4 - 20X1 1
540	F001267	4	DC-WROUGHT WASHER 1/2 ZP
550	F001442	2	DC-HEX HD CAP SCR 1/2-13X2 GR5
560	F001506	4	HEX JAM NUT 1"-8 GR2 ZP
570	F002657	8	DC-COTTER PIN 3/16 X 1 3/4
580	F002721	2	DC-HEX HD CAP SCR 3/8-16X3 3/4
590	F002929	1	DC-SAE WASHER 3/4 ZP *
600	F003114	1	ADJ YOKE END
610	F003400	2	HEX JAM NUT 3/4-10 GR2 ZP
620	D6931YAA	1	BRACKET, VALVE & HOSE MTG
630	F004606	6	DC-1/4-20 ELASTIC STOP NUT
640	F005192	8	DC-HEX HD CAP SCR 5/8-11X1 3/4
650	F010677	1	DC-MALE ELB90 4X2NPT *
660	F010692	1	DC-TEE 8FPTX8NPTX8FPT
670	F010988	8	ELB90 6X4NPT
680	F010994	8	DC-STR 6X4 NPT
690	F012027	2	DC-STR 8X8NPT
700	F013588	6	DC-1/4-20 ELAS STP NUT
710	F013695	2	DC-HEX NUT 3/4-10 GR5 ZP
720	F013856	4	DC-ELB45 8X8NPT
730	F013701	2	DC-ELB90 8X8 SAE
750	F014253	2	DC-STR 12X12SAE

FOR MARK IV AND MARK VI

#STANDARD SQUEEZE CYLINDER
#STANDARD VIBRATOR CARRIER
#VARIABLE DEPTH W/H CONTROL

Inch
[mm]

CONFIDENTIAL
© COPYRIGHT 2011 HARSCO. THIS DRAWING OR DOCUMENT IS THE PROPERTY OF HARSCO AND EMBODIES CONFIDENTIAL INFORMATION, TRADE SECRET INFORMATION, AND/OR KNOW-HOW THAT IS THE PROPERTY OF HARSCO. BY ACCEPTING THIS DRAWING OR DOCUMENT, THE RECIPIENT AGREES (1) NOT TO PROVIDE, OR OTHERWISE MAKE AVAILABLE, THE DRAWING OR DOCUMENT, OR ANY INFORMATION OR KNOW-HOW EMBODIED THEREIN, TO ANY THIRD PARTY AND (2) NOT TO REPRODUCE OR USE THE DRAWING OR DOCUMENT TO MANUFACTURE ANY APPARATUS OR DEVICE, WITHOUT THE PRIOR WRITTEN AUTHORIZATION OF HARSCO.

NOMINAL SIZE RANGE OVER	TO	INCH PLUS OR MINUS 2 PLACE DECIMAL	3 PLACE DECIMAL
0	6	.03	.005
6	24	.04	.005
24	-	.06	.010

NOMINAL SIZE RANGE OVER	TO	METRIC PLUS OR MINUS 2 PLACE DECIMAL	3 PLACE DECIMAL
0	150	.8	.13
150	600	1.0	.20
600	-	1.5	.25

UNLESS OTHERWISE SPECIFIED ALL MACHINED SURFACES WILL HAVE A SURFACE FINISH OF 125 MICROINCHES ANGULAR TOLERANCE OF ±0° CONCENTRICITY WITHIN .010

THIRD ANGLE PROJECTION

UNLESS OTHERWISE SPECIFIED, ALL WELDS SHOULD ADHERE TO THE MOST CURRENT A.W.S WELDING STANDARDS

CHANGE	R/L	REVISION	DR	DATE
EC501000	A	NEW RELEASE	SRK	04-26-11

Description: VIBRATOR AND WORKHEAD ASSY LH

HARSCO RAIL

Material: --; --

Machine Type: MARK IV

Size: E

Weight: 2853.4 lbm

Drawn: skumar

Date Drawn: 5/12/2011

Part Number: 5007871

Sheet: 1 of 4

SOLID EDGE DRAWING

DO NOT SCALE

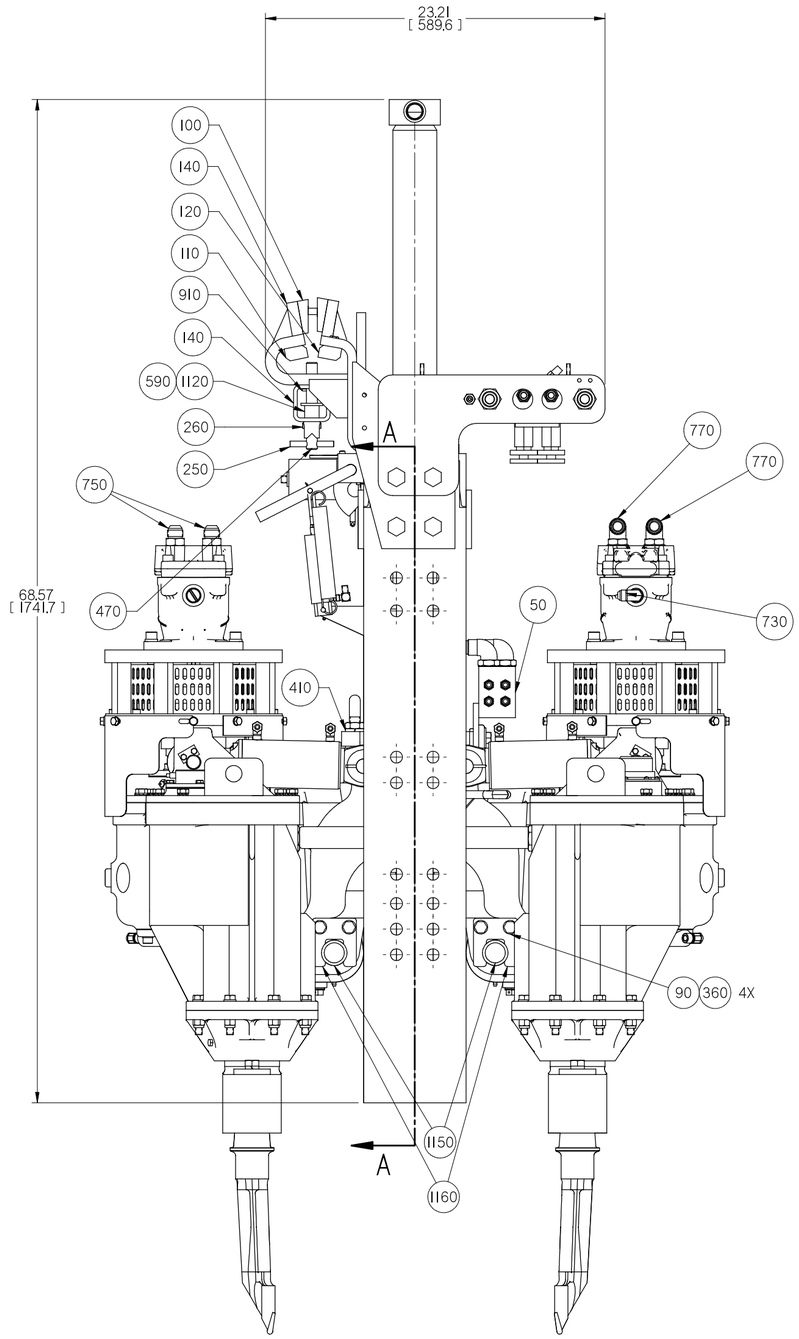

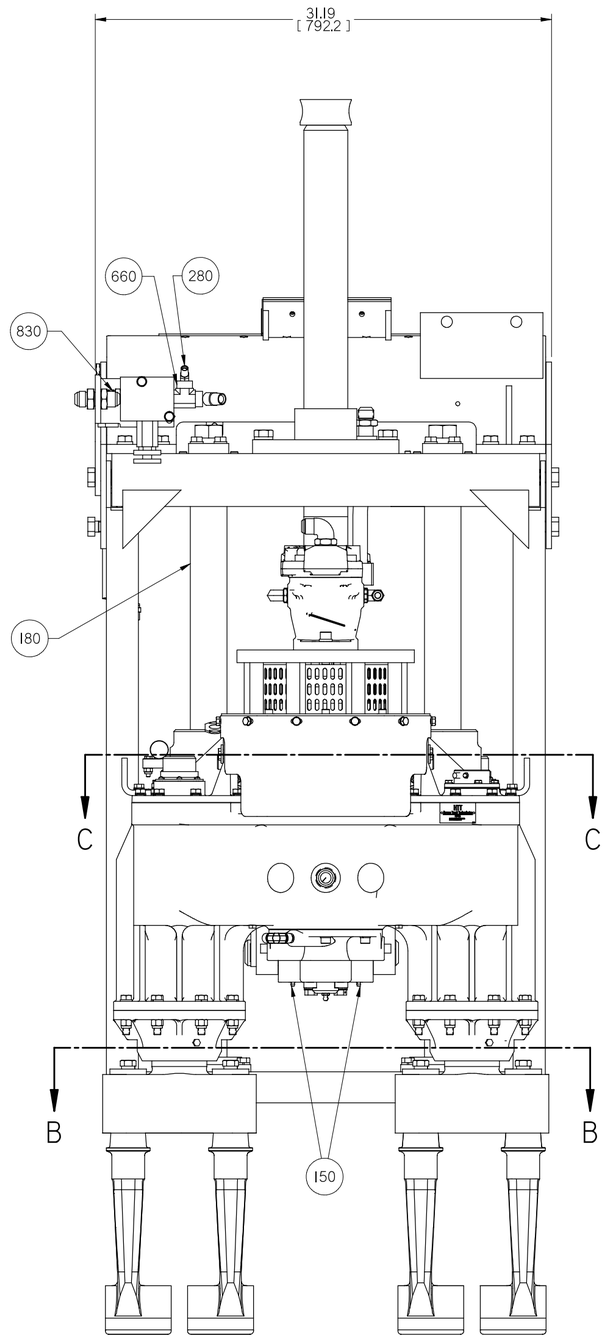

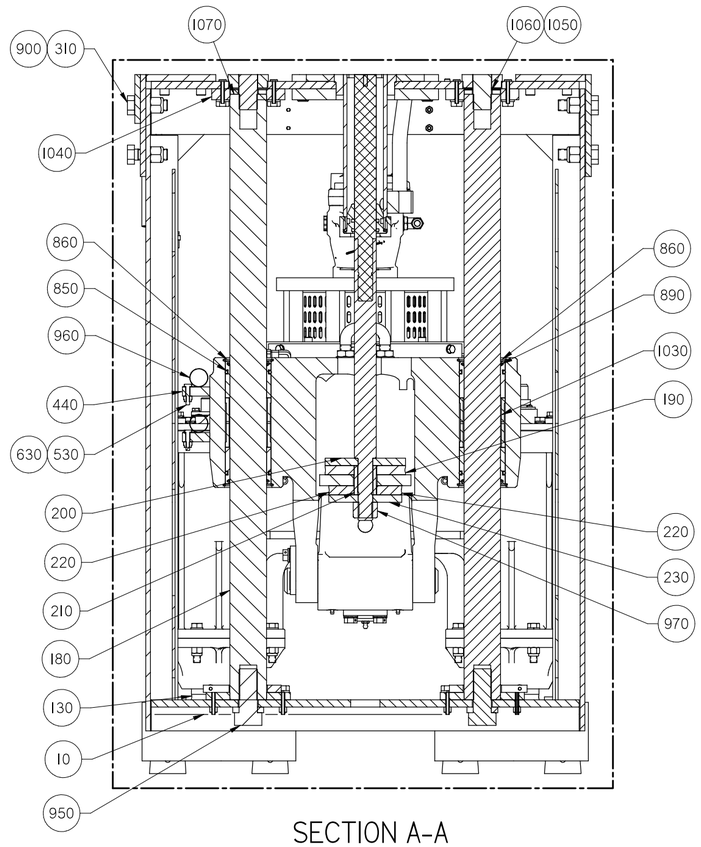

SECTION A-A

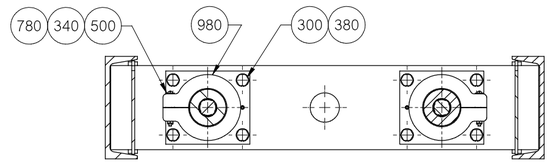

SECTION B-B

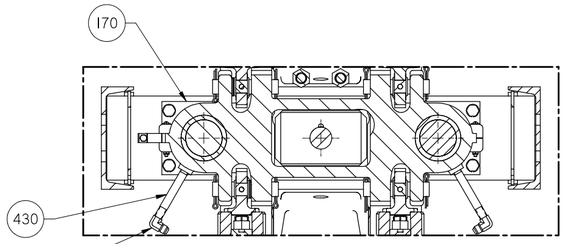

SECTION C-C

Inch
[mm]

CONFIDENTIAL
© COPYRIGHT 2011 HARSCO. THIS DRAWING OR DOCUMENT IS THE PROPERTY OF HARSCO AND EMBODIES CONFIDENTIAL INFORMATION, TRADE SECRET INFORMATION, AND/OR KNOW-HOW THAT IS THE PROPERTY OF HARSCO. BY ACCEPTING THIS DRAWING OR DOCUMENT, THE RECIPIENT AGREES (1) NOT TO PROVIDE, OR OTHERWISE MAKE AVAILABLE, THE DRAWING OR DOCUMENT, OR ANY INFORMATION OR KNOW-HOW EMBODIED THEREIN, TO ANY THIRD PARTY AND (2) NOT TO REPRODUCE OR USE THE DRAWING OR DOCUMENT TO MANUFACTURE ANY APPARATUS OR DEVICE, WITHOUT THE PRIOR WRITTEN AUTHORIZATION OF HARSCO.

NOMINAL SIZE RANGE		INCH PLUS OR MINUS		NOMINAL SIZE RANGE		METRIC PLUS OR MINUS	
OVER	TO	2 PLACE DECIMAL	3 PLACE DECIMAL	OVER	TO	2 PLACE DECIMAL	3 PLACE DECIMAL
0	6	.03	.005	0	150	.8	.13
6	24	.04	.005	150	600	1.0	.20
24	-	.06	.010	600	-	1.5	.25

UNLESS OTHERWISE SPECIFIED ALL MACHINED SURFACES WILL HAVE:
A SURFACE FINISH OF 125 MICROINCHES
ANGULAR TOLERANCE OF ±0°
CONCENTRICITY WITHIN .010

THIRD ANGLE PROJECTION

UNLESS OTHERWISE SPECIFIED, ALL WELDS SHOULD ADHERE TO THE MOST CURRENT A.W.S WELDING STANDARDS

CHANGE	R/L	REVISION	DR	DATE
EC501000	A	NEW RELEASE	SRK	04-26-11

Description: VIBRATOR AND WORKHEAD ASSY LH

HARSCO RAIL

Material: –; –

Machine Type: MARK IV

Size: E

Weight: 2853.4 lbm

Drawn: skumar

Date Drawn: 5/12/2011

Part Number: 5007871

Sheet: 2 of 4

SOLID EDGE DRAWING

DO NOT SCALE

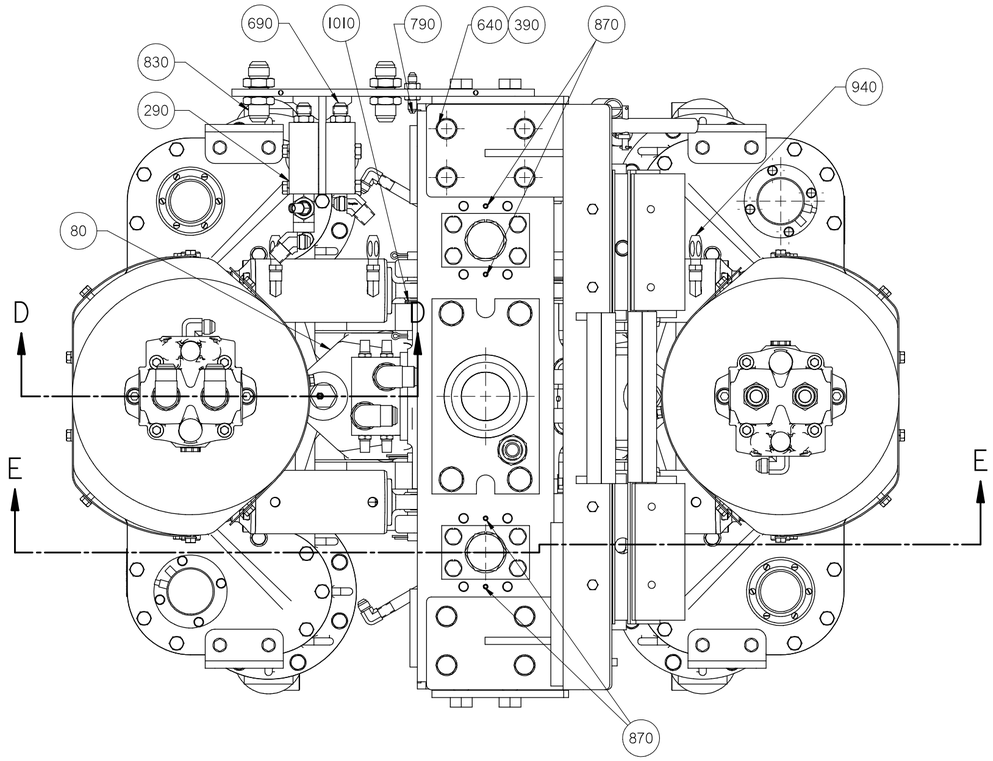

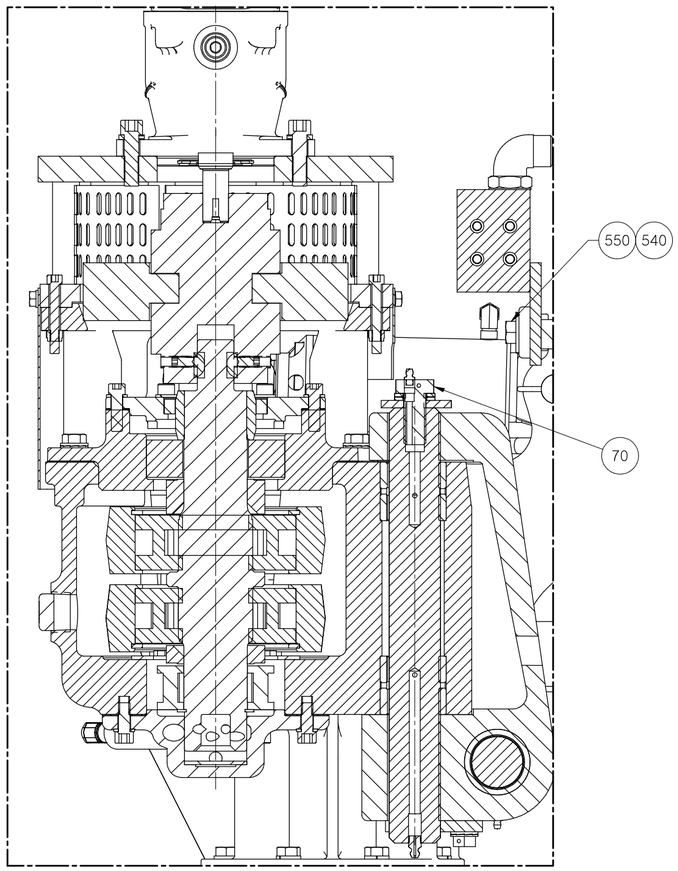

SECTION D-D

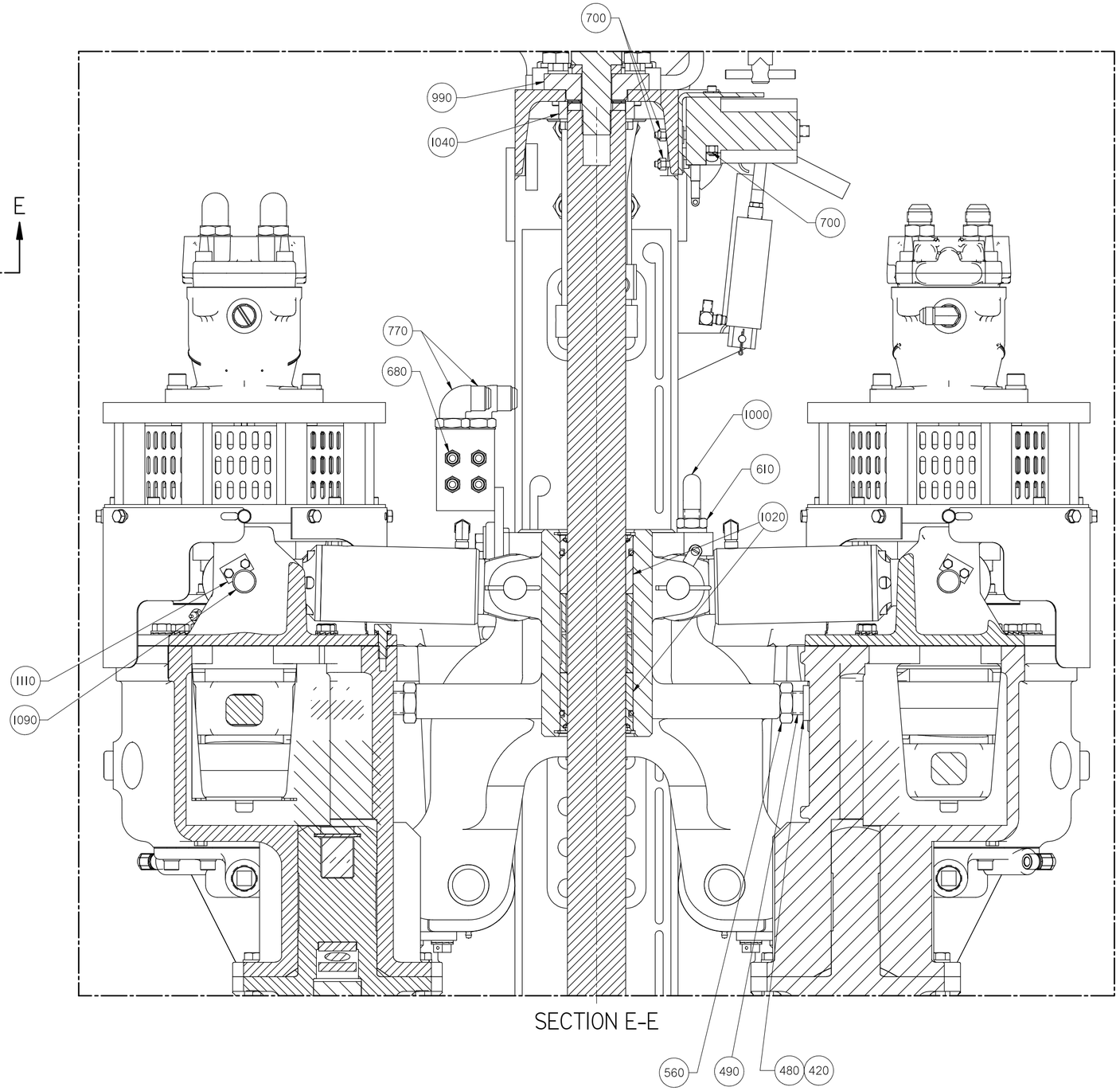

SECTION E-E

Inch
[mm]

CONFIDENTIAL
© COPYRIGHT 2011 HARSCO. THIS DRAWING OR DOCUMENT IS THE PROPERTY OF HARSCO AND EMBODIES CONFIDENTIAL INFORMATION, TRADE SECRET INFORMATION, AND/OR KNOW-HOW THAT IS THE PROPERTY OF HARSCO. BY ACCEPTING THIS DRAWING OR DOCUMENT, THE RECIPIENT AGREES (1) NOT TO PROVIDE, OR OTHERWISE MAKE AVAILABLE, THE DRAWING OR DOCUMENT, OR ANY INFORMATION OR KNOW-HOW EMBODIED THEREIN, TO ANY THIRD PARTY AND (2) NOT TO REPRODUCE OR USE THE DRAWING OR DOCUMENT TO MANUFACTURE ANY APPARATUS OR DEVICE, WITHOUT THE PRIOR WRITTEN AUTHORIZATION OF HARSCO.

NOMINAL SIZE RANGE OVER	TO	INCH PLUS OR MINUS FRACT.	DECIMAL	NOMINAL SIZE RANGE OVER	TO	METRIC PLUS OR MINUS FRACT.	DECIMAL
0	6	.03	.005	0	150	.8	.13
6	24	.04	.005	150	600	1.0	.20
24	-	.06	.010	600	-	1.5	.30

UNLESS OTHERWISE SPECIFIED ALL MACHINED SURFACES ARE 125 RMS.
A SURFACE FINISH OF 125 MICROINCHES AVERAGE TOLERANCE OF .06" CONCENTRICITY WITHIN .010

THIRD ANGLE PROJECTION

UNLESS OTHERWISE SPECIFIED, ALL WELDS SHOULD ADHERE TO THE MOST CURRENT A.W.S WELDING STANDARDS

CHANGE	R/L	REVISION	DR	DATE
EC501000	A	NEW RELEASE	SRK	04-28-11

Description: VIBRATOR AND WORKHEAD ASSY LH

HARSCO RAIL

Material: –; –

Machine Type: MARK IV

Size: E

Weight: 2853.4 lbm

Drawn: skumar

Date Drawn: 5/12/2011

Part Number: 5007871

Sheet: 3 of 4

SOLID EDGE DRAWING

DO NOT SCALE

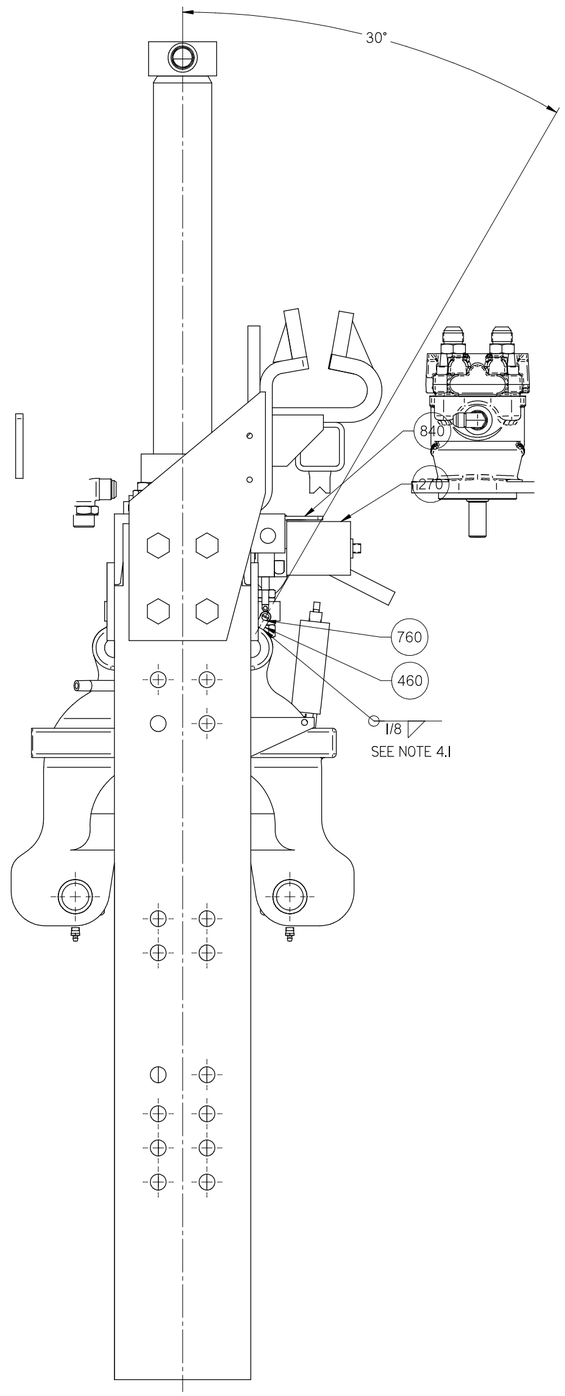

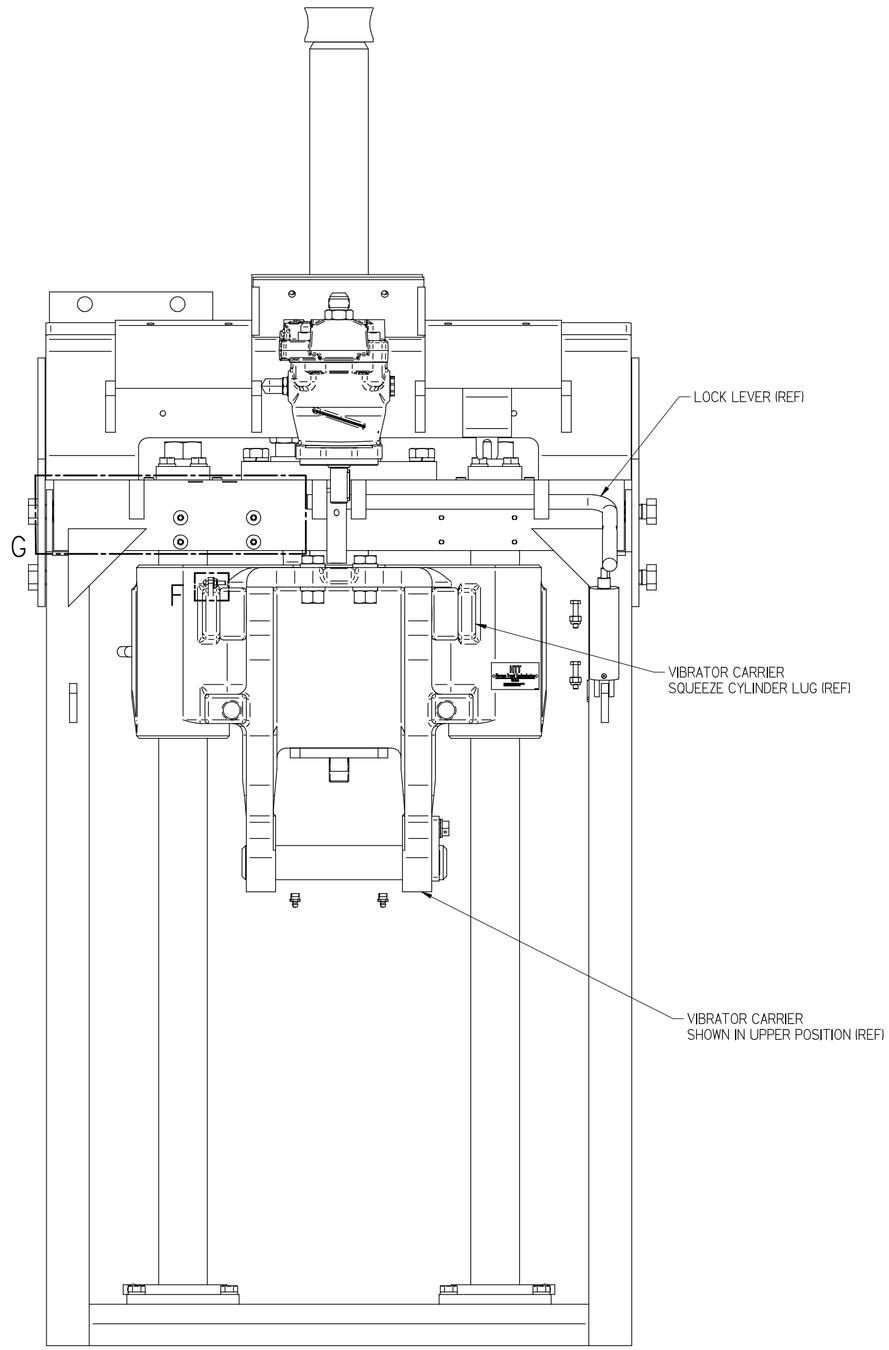

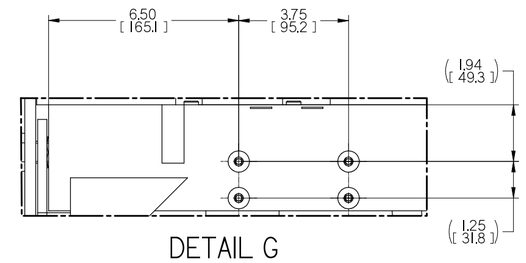

DETAIL G

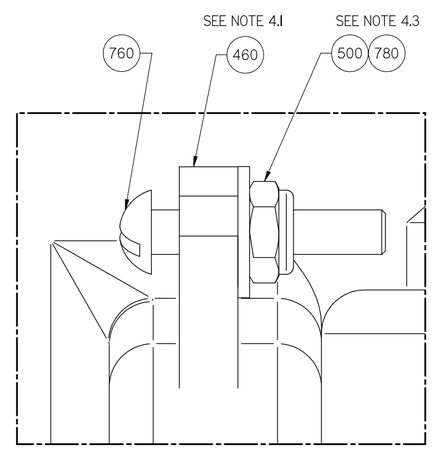

DETAIL F

NOTES:

4.1. ITEM# 460 (EYE) SHOULD BE LOCATED AT 30° AS SHOWN ON VIBRATOR CARRIER SQUEEZE CYLINDER LUG ,OPPOSITE SIDE FROM LOCKING LEVER. WELD AS INDICATED,CENTERED ON VIBRATOR CARRIER SQUEEZE CYLINDER LUG.

4.2. ITEM# 270 (POTENTIOMETER) & 840 (POTENTIOMETER MTG BKT)SHOULD BE ADJUSTED IN BOTH DIRECTIONS BY USING SLOTS IN ITEM# 840,TO ENSURE THAT THE MEASURING LINE OF ITEM# 270 IS INLINE WITH ITEM# 460 (EYE) & RD HD SCREW ITEM# 760 & 780.

4.3. DO NOT TIGHTEN ITEM# 780 (LOCKNUT) COMPLETELY.STRING POTENTIOMETER CABLE MUST BE FREE TO ROTATE.

Inch
[mm]

CONFIDENTIAL
© COPYRIGHT 2011 HARSCO. THIS DRAWING OR DOCUMENT IS THE PROPERTY OF HARSCO AND EMBODIES CONFIDENTIAL INFORMATION, TRADE SECRET INFORMATION, AND/OR KNOW-HOW THAT IS THE PROPERTY OF HARSCO. BY ACCEPTING THIS DRAWING OR DOCUMENT, THE RECIPIENT AGREES (1) NOT TO PROVIDE, OR OTHERWISE MAKE AVAILABLE, THE DRAWING OR DOCUMENT, OR ANY INFORMATION OR KNOW-HOW EMBODIED THEREIN, TO ANY THIRD PARTY AND (2) NOT TO REPRODUCE OR USE THE DRAWING OR DOCUMENT TO MANUFACTURE ANY APPARATUS OR DEVICE, WITHOUT THE PRIOR WRITTEN AUTHORIZATION OF HARSCO.

GENERAL DIMENSIONS		INCH PLUS OR MINUS		GENERAL DIMENSIONS		METRIC PLUS OR MINUS	
OVER	TO	1 PLACE DECIMAL	2 PLACE DECIMAL	OVER	TO	1 PLACE DECIMAL	2 PLACE DECIMAL
0	6	.03	.005	0	150	.8	.13
6	24	.04	.005	150	600	1.0	.20
24	-	.06	.010	600	-	1.5	.25

UNLESS OTHERWISE SPECIFIED ALL MACHINED SURFACES WILL HAVE A SURFACE FINISH OF 125 MICROINCHES AVERAGE TOLERANCE OF .06" CONCENTRICITY WITHIN .010

THIRD ANGLE PROJECTION

UNLESS OTHERWISE SPECIFIED, ALL WELDS SHOULD ADHERE TO THE MOST CURRENT A.W.S WELDING STANDARDS

CHANGE	R/L	REVISION	DR	DATE
EC501000	A	NEW RELEASE	SRK	04-28-11

Description: VIBRATOR AND WORKHEAD ASSY LH

HARSCO RAIL

Material: –; –

Machine Type: MARK IV

Size: E

Weight: 2853.4 lbm

Drawn: skumar

Date Drawn: 5/12/2011

Part Number: 5007871

Sheet: 4 of 4

SOLID EDGE DRAWING

DO NOT SCALE

CONFIDENTIAL
© COPYRIGHT 2011 HARSCO. THIS DRAWING OR DOCUMENT IS THE PROPERTY OF HARSCO AND EMBODIES CONFIDENTIAL INFORMATION, TRADE SECRET INFORMATION, AND/OR KNOW-HOW THAT IS THE PROPERTY OF HARSCO. BY ACCEPTING THIS DRAWING OR DOCUMENT, THE RECIPIENT AGREES (1) NOT TO PROVIDE, OR OTHERWISE MAKE AVAILABLE, THE DRAWING OR DOCUMENT, OR ANY INFORMATION OR KNOW-HOW EMBODIED THEREIN, TO ANY THIRD PARTY AND (2) NOT TO REPRODUCE OR USE THE DRAWING OR DOCUMENT TO MANUFACTURE ANY APPARATUS OR DEVICE, WITHOUT THE PRIOR WRITTEN AUTHORIZATION OF HARSCO.

ITEM	PART NO	QTY	DESCRIPTION
10	5007783	1	PIVOT PIN
20	5007872	1	ANTI-ROTATION KEEPER
30	5007873	1	PIVOT PIN WASHER
40	H3948Y05	2	DISC LOCK WASHER
50	H3948Y04	1	DISC LOCK WASHER
60	5007906	1	3/4-10 UNC X 1-1/2" HEX HEAD BOLT
70	L411694	2	GREASE FITTING 1/8 NPT
80	5007905	2	1/2-13 UNC X 1-1/2" HEX HEAD BOLT

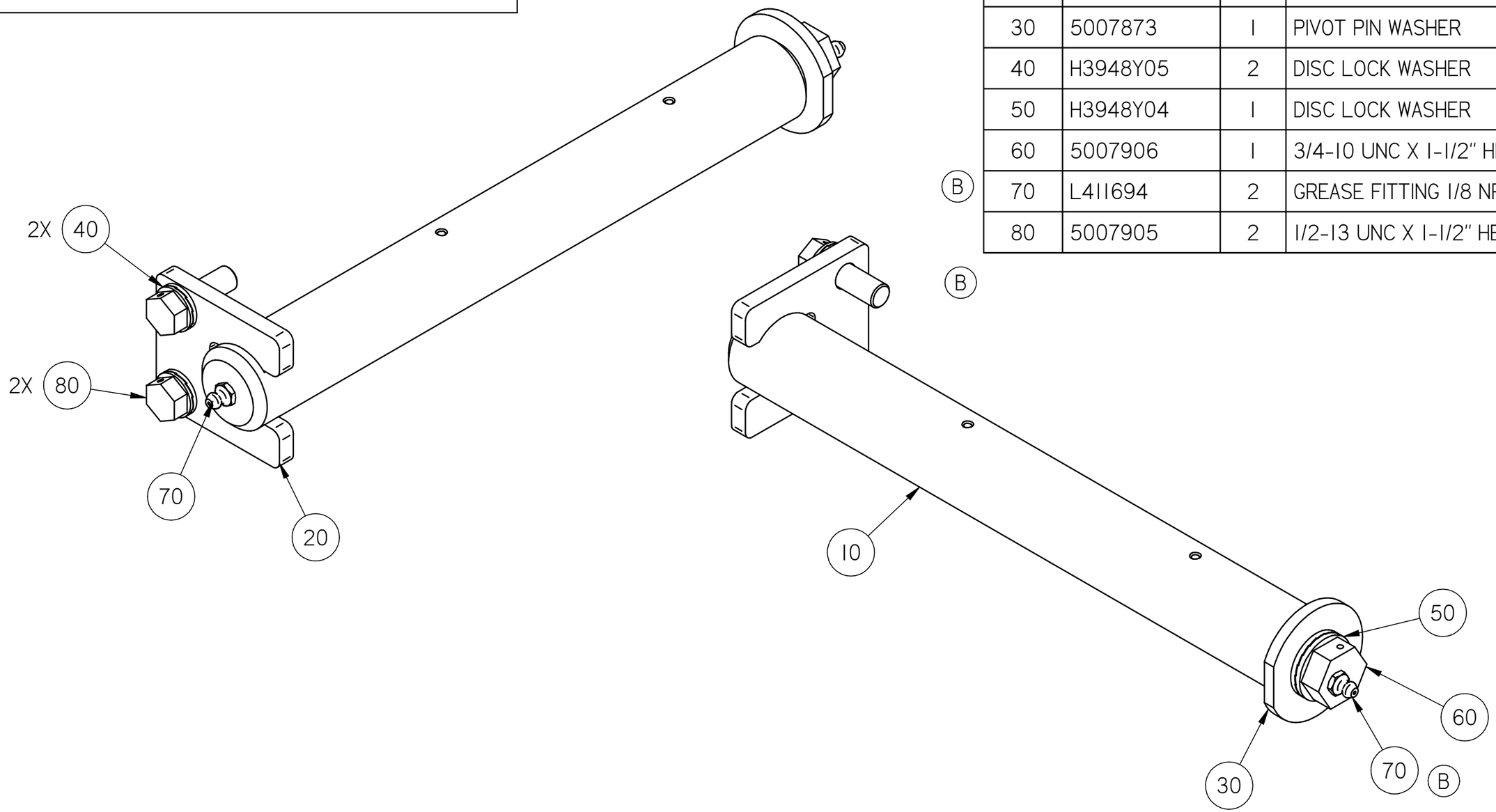

Inch
[mm]

NOMINAL SIZE RANGE		INCH PLUS OR MINUS		NOMINAL SIZE RANGE		METRIC PLUS OR MINUS	
OVER	TO	2 PLACE DECIMAL	3 PLACE DECIMAL	OVER	TO	1 PLACE DECIMAL	2 PLACE DECIMAL
0	6	.03	.005	0	150	.8	.13
6	24	.04	.008	150	600	1.0	.20
24	-	.06	.010	600	-	1.5	.25

UNLESS OTHERWISE SPECIFIED, ALL MACHINED SURFACES WILL HAVE:
A SURFACE FINISH OF 125 MICROINCHES
ANGULAR TOLERANCE OF ± .50°
CONCENTRICITY WITHIN .010

THIRD ANGLE PROJECTION

UNLESS OTHERWISE SPECIFIED, ALL WELDS SHOULD ADHERE TO THE MOST CURRENT A.W.S WELDING STANDARDS

CHANGE	R/L	REVISION	DR	DATE
EC501000	A	NEW RELEASE	SRK	04-25-11
EC503062	B	ITEM 70 QTY WAS 1 & DEL ITEM 90 WAS F008014	HW	03-05-12

Description: PIVOT PIN ASSY

HARSCO RAIL

Material: ---; ---
Machine Type: MARK IV
Size: B
Weight: 11.3 lbm
Drawn: skumar
Date Drawn: 3/5/2012
Part Number: 5007907
Sheet: 1 of 1

SOLID EDGE DRAWING
DO NOT SCALE

CONFIDENTIAL
© COPYRIGHT 2009 HARSCO. THIS DRAWING OR DOCUMENT IS THE PROPERTY OF HARSCO AND EMBODIES CONFIDENTIAL INFORMATION, TRADE SECRET INFORMATION, AND/OR KNOW-HOW THAT IS THE PROPERTY OF HARSCO. BY ACCEPTING THIS DRAWING OR DOCUMENT, THE RECIPIENT AGREES (1) NOT TO PROVIDE, OR OTHERWISE MAKE AVAILABLE, THE DRAWING OR DOCUMENT, OR ANY INFORMATION OR KNOW-HOW EMBODIED THEREIN, TO ANY THIRD PARTY AND (2) NOT TO REPRODUCE OR USE THE DRAWING OR DOCUMENT TO MANUFACTURE ANY APPARATUS OR DEVICE, WITHOUT THE PRIOR WRITTEN AUTHORIZATION OF HARSCO.

SOLID EDGE DRAWING

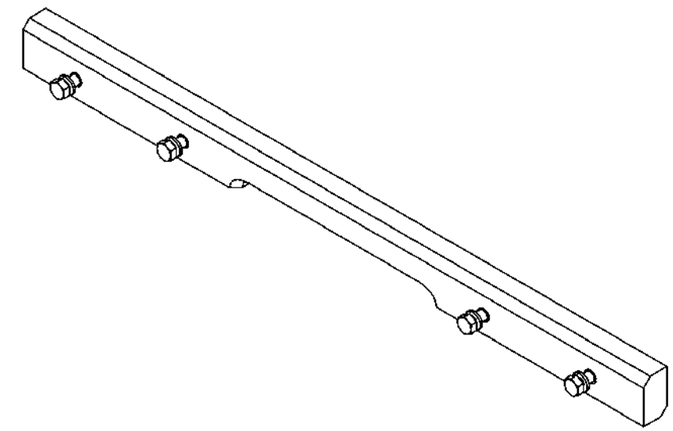

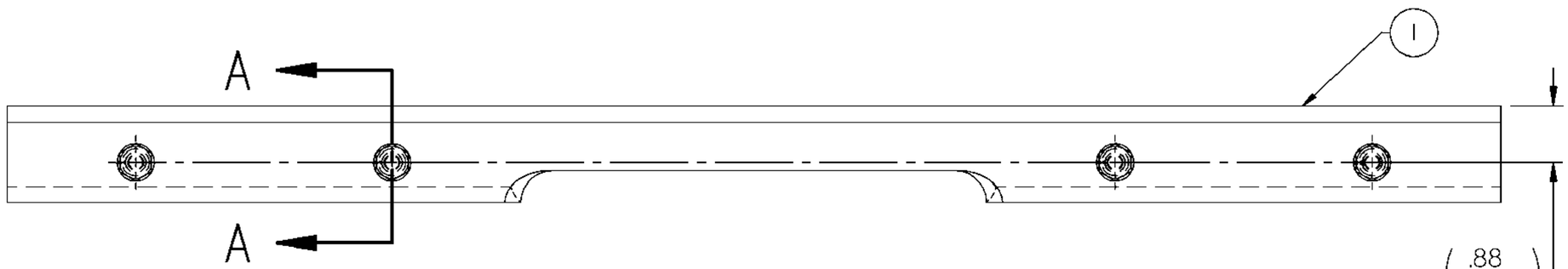

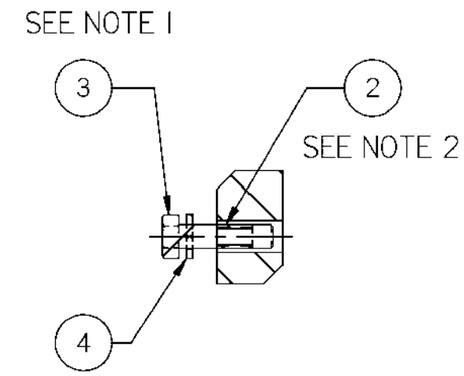

SECTION A-A

Item Number	Document Number	Title	Quantity
4	F009546	5/16 LOCK WASHER	4
3	F001113	5/16-18 X 1 1/4 HEX HD CAP SCREW	4
2	B0753Y01	THREADED INSERT	4
1	0-1304827-0-02	REAR SLIDE PAD	1

NOTE:
1. DO NOT TIGHTEN SCREWS
2. FLUSH WITH THE SLIDE PAD

Inch
[mm]

IMPLIED TOLERANCES
ALL DIMENSIONS ARE IN INCHES - TOLERANCE UNLESS OTHERWISE SPECIFIED

NOMINAL SIZE RANGE		INCH PLUS OR MINUS		NOMINAL SIZE RANGE		METRIC PLUS OR MINUS	
OVER	TO	2 PLACE DECIMAL	3 PLACE DECIMAL	OVER	TO	1 PLACE DECIMAL	2 PLACE DECIMAL
0	6	.03	.005	0	150	.8	.13
6	24	.04	.008	150	600	1.0	.20
24	-	.06	.010	600	-	1.5	.25

UNLESS OTHERWISE SPECIFIED, ALL MACHINED SURFACES WILL HAVE:
A SURFACE FINISH OF 125 MICROINCHES
ANGULAR TOLERANCE OF ± 50'
CONCENTRICITY WITHIN .010

THIRD ANGLE PROJECTION

UNLESS OTHERWISE SPECIFIED, ALL WELDS SHOULD ADHERE TO THE MOST CURRENT A.W.S WELDING STANDARDS

CHANGE	R/L	REVISION	DATE
ECN-106215	C	SE-DRAFT VERSION CREATED	06-03-10

Description: REAR SLIDE ASSEMBLY
Drawing Number: ----------
Machine Type: MARK IV
Model: G0851YAA.asm
Drawn: shol
Date Drawn: 03 Jun 10
Weight: 1.3 lbm
Scale: 1:2
APVD Desg: BPA
APVD ChEng: HW
Mat'l

HARSCO RAIL

Part Number: G0851YAA
Size: B
Sheet: 1 of 1

Plotted by shol on 8/19/2010 G0851YAA.dft

CONFIDENTIAL
© COPYRIGHT 2009 HARSCO. THIS DRAWING OR DOCUMENT IS THE PROPERTY OF HARSCO AND EMBODIES CONFIDENTIAL INFORMATION, TRADE SECRET INFORMATION, AND/OR KNOW-HOW THAT IS THE PROPERTY OF HARSCO. BY ACCEPTING THIS DRAWING OR DOCUMENT, THE RECIPIENT AGREES (1) NOT TO PROVIDE, OR OTHERWISE MAKE AVAILABLE, THE DRAWING OR DOCUMENT, OR ANY INFORMATION OR KNOW-HOW EMBODIED THEREIN, TO ANY THIRD PARTY AND (2) NOT TO REPRODUCE OR USE THE DRAWING OR DOCUMENT TO MANUFACTURE ANY APPARATUS OR DEVICE, WITHOUT THE PRIOR WRITTEN AUTHORIZATION OF HARSCO.

SOLID EDGE DRAWING

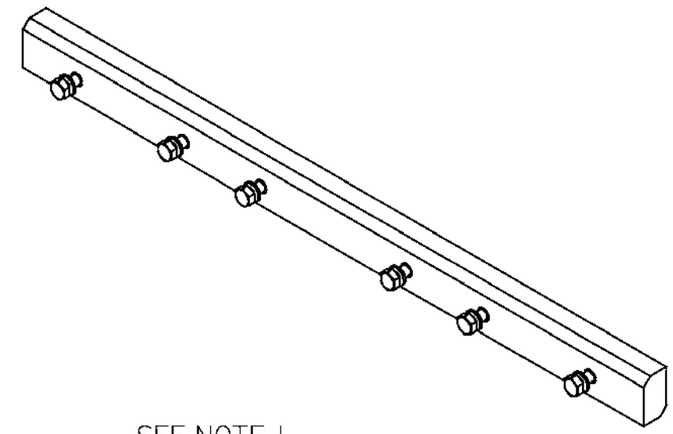

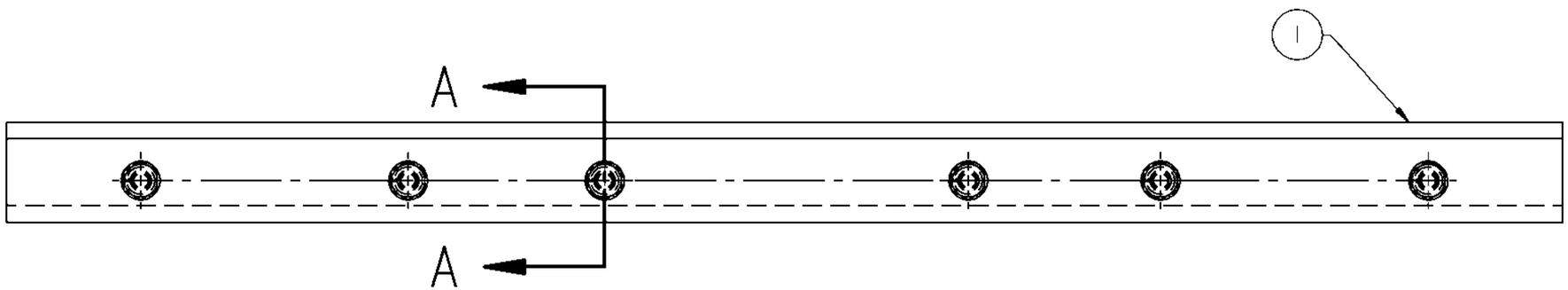

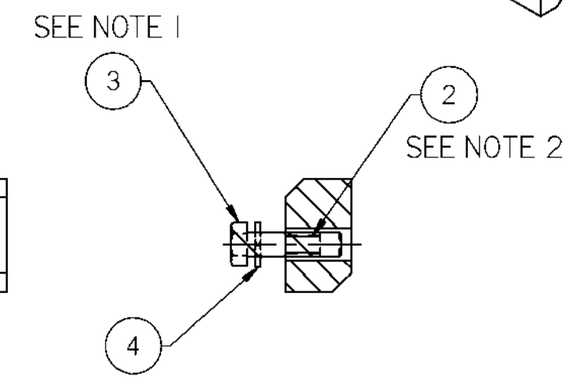

SECTION A-A
6 PLCS

Item Number	Document Number	Title	Quantity
4	F009546	5/16 LOCK WASHER	6
3	F001113	5/16-18 X 1 1/4 HEX HD CAP SCREW	6
2	B0753Y01	THREADED INSERT	6
1	0-1304828-0-02	FRONT SLIDE PAD	1

NOTE:
1. DO NOT TIGHTEN SCREWS
2. FLUSH WITH THE SLIDE PAD

Inch
[mm]

IMPLIED TOLERANCES
ALL DIMENSIONS ARE IN INCHES - TOLERANCE UNLESS OTHERWISE SPECIFIED

NOMINAL SIZE RANGE		INCH PLUS OR MINUS		NOMINAL SIZE RANGE		METRIC PLUS OR MINUS	
OVER	TO	2 PLACE DECIMAL	3 PLACE DECIMAL	OVER	TO	1 PLACE DECIMAL	2 PLACE DECIMAL
0	6	.03	.005	0	150	.8	.13
6	24	.04	.008	150	600	1.0	.20
24	-	.06	.010	600	-	1.5	.25

UNLESS OTHERWISE SPECIFIED, ALL MACHINED SURFACES WILL HAVE:
A SURFACE FINISH OF 125 MICROINCHES
ANGULAR TOLERANCE OF ± 50'
CONCENTRICITY WITHIN .010

THIRD ANGLE PROJECTION

UNLESS OTHERWISE SPECIFIED, ALL WELDS SHOULD ADHERE TO THE MOST CURRENT A.W.S WELDING STANDARDS

CHANGE	R/L	REVISION	DATE
ECN-106215	C	SE-DRAFT VERSION CREATED	06-03-10

Description: FRONT SLIDE ASSEMBLY
Drawing Number: ----------
Machine Type: MARK IV
Model: G0852YAA.asm
Drawn: shol
Date Drawn: 03 Jun 10
Weight: 1.5 lbm
Scale: 1:2
APVD Desg: BPA
APVD ChEng: HW
Mat'l:

HARSCO RAIL

Part Number: G0852YAA
Size: B
Sheet: 1 of 1

Plotted by shol on 8/19/2010 G0852YAA.dft

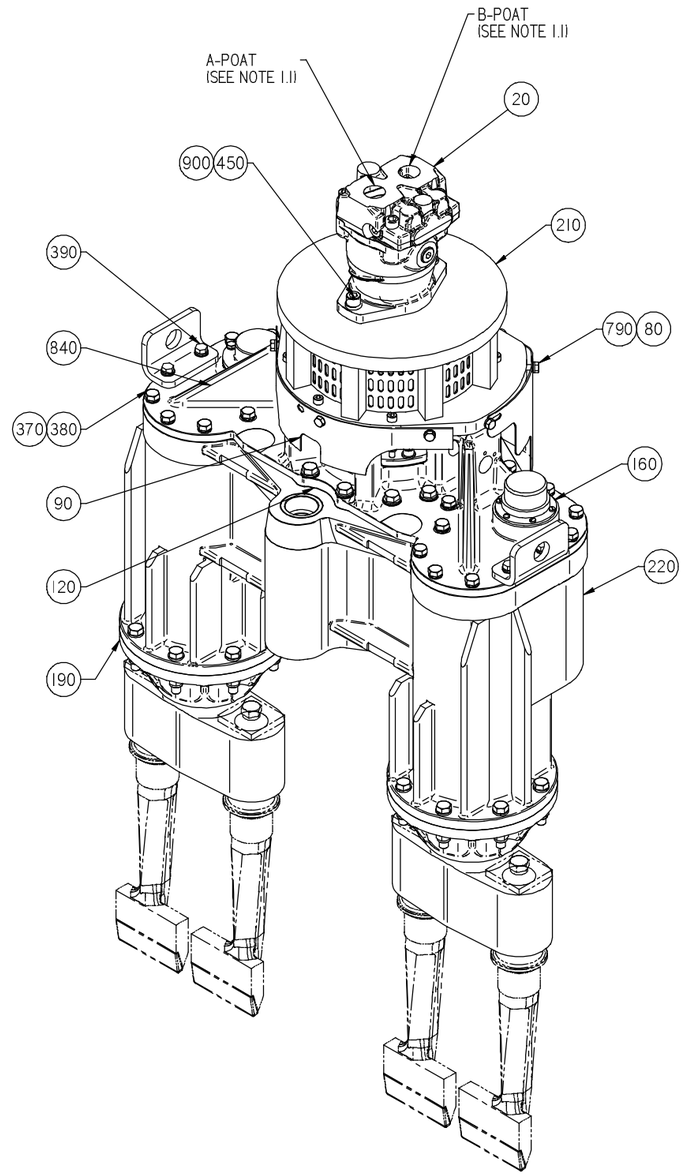

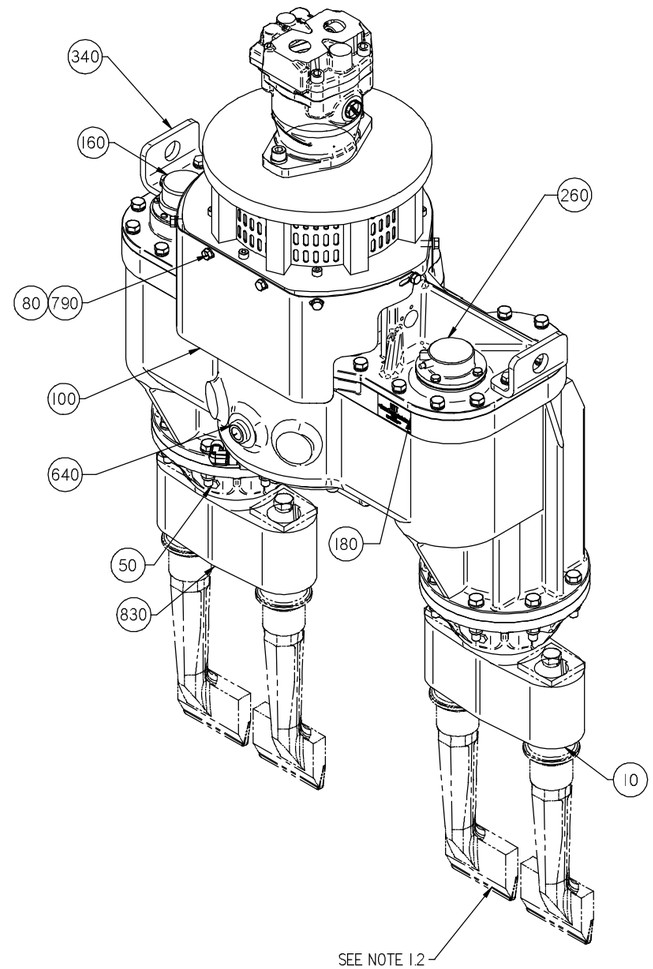

ITEM	PART NO	DESCRIPTION	QTY	ITEM	PART NO	DESCRIPTION	QTY
10	W684189	VIBRATOR SHAFT,LONG	1	490	F025177	HEX SKT HD CS M10X1.5X25 CL12.	6
20	5004391	MOTOR, PISTON	1	500	F020668	LOCKWASHER, M10	12
30	408717	HEX SKT HD CS M8X1.25X60 CL12.	6	510	F012236	3/8-16 X 1 1/4 SKT HD CS	6
40	D5288Y01	FLEXIBLE COUPLING ASSY	1	520	L40564	PIN ROLL	2
50	0-3304080-0-02	PLUG	2	530	F003067	DC-HEX HD CAP SCR 1/4-20X5/8 G	4
60	A0061013	1/2 MED LOK WSHR	8	540	L41075	PLUG, SQUARE HEAD MAGNET	2
70	Z68053	STOP PLATE	2	550	L420110	PLUG, HEX. PIPE	2
80	F009546	5/16 LOCK WASHER	9	560	L410182	NEEDLE BRG (VIB)	2
90	0-1303686-0-01	SHIELD	1	570	L410181	NEEDLE BRG. (VIB)	2
100	0-1303949-0-01	SHROUD	1	580	L40885	RINGS, TRUARC ARC RETAIN	2
110	0-3015006-0-24	ROLL PIN	1	590	L41058	RING, RETAINING	2
120	X681042	VIBRATOR COVER PLATE GASKET	1	600	A0061008	1/4 MED LOK WSHR	4
130	0-3010037-0-01	WOODRUFF KEY	2	610	L40732	ROLLER BRG. (VIB)	1
140	C2339Y01	MOD TO FAN BLADES	1	620	F012367	1/4-20 X 1 3/4 SH CS	3
150	A0049001	10-24 X 3/8 FLSTRHDMSCR	6	630	A0062029	3/8-16X3/4 SHSSCR CUP	2
160	0-3381010-0-02	FILLER BREATHER	1	640	L40567	GAUGE BRASS OIL	1
170	A3476Y01	LOCKNUT	2	650	L40550	OIL SEAL (VIB)	2
180	H6381Y02	VIBRATOR ASSY NAMEPLATE	1	660	L40522	O-RING (VIB)	2
190	W681200	BEARING SLEEVE	2	670	L40551	BALL BRG (VIB)	2
200	0-1201169-0-01	VIBRATOR ECCENTRIC SHAFT	1	680	F012033	1/2-20 X 1 1/4 SKT HD CS	8
210	C2307VAA	ADAPTER WELDMENT	1	690	L40552	BEARING (VIB)	2
220	0-2200082-0-01	VIBRATOR HOUSING ASSEMBLY	1	700	L40450	RING RETAINING	2
240	Y682459	TOP BEARING HOUSING GASKET	1	710	L41057	OIL SEAL (VIB)	1
250	Y68313-01	VIBRATOR PIN	2	720	L41055	BALL BRG. (VIB)	2
260	Y683564	LUBRICATION TEE	1	730	L41070	BUSHING PIPE (VIB)	2
270	Z682451	VIBRATOR TOP SPACER	1	740	L41069	MALE ELBOW	1
280	Z682461	IMPELLER HOUSING GASKET	1	750	L41068	CONNECTOR, MALE	3
290	Z68323-01	LOWER THRUST BEARING SPACER	2	760	L410945	TUBING, NYLON TYPE	22
300	Z68337-01	UPPER THRUST BEARING SPACER	2	770	L41785	NEEDLE BRG. (VIB)	2
310	Z68338-01	VIBRATOR SPACER RING	1	780	L410180	NEEDLE BRG (VIB)	2
320	Z683565	LUBRICATION TEE GASKET	1	790	F001489	DC-HEX HD CAP SCR 5/16-18X3/4	9
330	Z687027	VIBRATOR PUMP SEAL	1	800	L41059	RETAINING RING	1
340	G2814X01	LIFT BRACKET	2	810	L40559	VIB BRG. (VIB)	1
350	TY766547-009	M12 X 1.75 X 40MM HHCS GR 8.8	12	820	F041213	HEX ELASTIC STOP NUT M8X1.25 Z	6
360	H3948Y05	DISC LOCK WASHER	12	830	W684188	VIBRATOR SHAFT,SHORT	1
370	H3948Y01	DISC-LOCK WASHER	22	840	W682436	VIBRATOR HOUSING COVER MACH.	1
380	F020387	DC-HEX HD CS M10X1.5X30 CL8.8	22	850	X68308-01	ECCENTRIC CONNECTING ROD	2
390	A0036067	3/8-16 X 1 3/4 HH CAPSCREW	4	860	W68378-02	IMPELLAR HOUSING	1
400	Z753210-003	KEY	2	870	X688056	VIBRATOR FORK LINK ASSY	2
450	F012309	1/2-20 X 1 3/4 SKT HD CS	2	880	X682452	TOP BEARING COVER	1
460	F041212	DC-HEX ELASTIC STOP NUT M12X1	16	890	A3476Y03	LOCKNUT	2
470	A0069047	M12 X 1.75 60 H/HD/C/SCR	16	900	F001075	DC-SAE RGLR LOCK WASHER 1/2 ZP	2
480	0-3020000-0-04	M12 LOCK WASHER	16	910	0-1305995-0-01	COUPLING SPACER	1

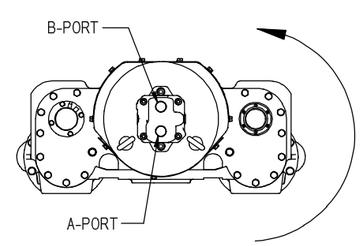

PROPER DIRECTION OF ROTATION

NOTE:

1. FIXED DISPLACEMENT MOTOR SHOULD BE ORIENTED AS SHOWN WITH A-PORT BEING PRESSURIZED AND B-PORT BEING THE RETURN FOR PROPER ROTATION DIRECTION.
2. SEE P753281 FOR NEW TAMPING TOOL KIT.

SOLID EDGE DRAWING

CONFIDENTIAL

© COPYRIGHT 2001 HARSCO TRACK TECHNOLOGIES. THIS DRAWING OR DOCUMENT IS THE PROPERTY OF HARSCO TRACK TECHNOLOGIES AND EMBODIES CONFIDENTIAL INFORMATION, TRADE SECRET INFORMATION, AND/OR KNOW-HOW THAT IS THE PROPERTY OF HARSCO TRACK TECHNOLOGIES. BY ACCEPTING THIS DRAWING OR DOCUMENT, THE RECIPIENT AGREES (1) NOT TO PROVIDE, OR OTHERWISE MAKE AVAILABLE, THE DRAWING OR DOCUMENT, OR ANY INFORMATION OR KNOW-HOW EMBODIED THEREIN, TO ANY THIRD PARTY AND (2) NOT TO REPRODUCE OR USE THE DRAWING OR DOCUMENT TO MANUFACTURE ANY APPARATUS OR DEVICE, WITHOUT THE PRIOR WRITTEN AUTHORIZATION OF HARSCO TRACK TECHNOLOGIES.

IMPLIED TOLERANCES

ALL DIMENSIONS ARE IN INCHES - TOLERANCE UNLESS OTHERWISE SPECIFIED

NOMINAL SIZE RANGE OVER	TO	INCH PLUS OR MINUS 2 PLACE DECIMAL	3 PLACE DECIMAL	NOMINAL SIZE RANGE OVER	TO	METRIC PLUS OR MINUS 1 PLACE DECIMAL	2 PLACE DECIMAL
0	6	.03	.005	0	150	.8	.13
6	24	.04	.008	150	600	1.0	.20
24	-	.06	.010	-	600	1.5	.25

UNLESS OTHERWISE SPECIFIED ALL MACHINED SURFACES WILL HAVE:
A SURFACE FINISH OF 125 MICROINCHES
ANGULAR TOLERANCE OF +- .25°
CONCENTRICITY WITHIN .010

THIRD ANGLE PROJECTION

UNLESS OTHERWISE SPECIFIED ALL WELDS SHOULD ADHERE TO THE LATEST HTT WELDING SPECIFICATION 101

CHANGE	R/L	REVISION	DATE
ECN-106368	J	SE-DRAFT VERSION CREATED	09-16-10
EC500680	K	ADDED NEW ITEM# 180 (VIBRATOR ASSY NAMEPLATE)	03-15-11
		REARRANGED ITEM # TO MATCH WITH TEAMCENTER	
EC501193	L	ITEM 20 WAS 4012702	05-20-11

Description: VIBRATOR ASSEMBLY
Drawing Number:
Model: C0607VAA.asm
Weight: 822.4 lbm
Scale: 1:4
Machine Type: MARK IV
Drawn: shol
Date Drawn: 16 Sep 10
APVD Dwg: BPA
APVD Dtlng: HW
Mat'l - -

HARSCO RAIL

Part Number: C0607VAA
Size: D
Sheet: 1 of 5

Plotted by hwiggins on 5/20/2011 C0607VAA.dft

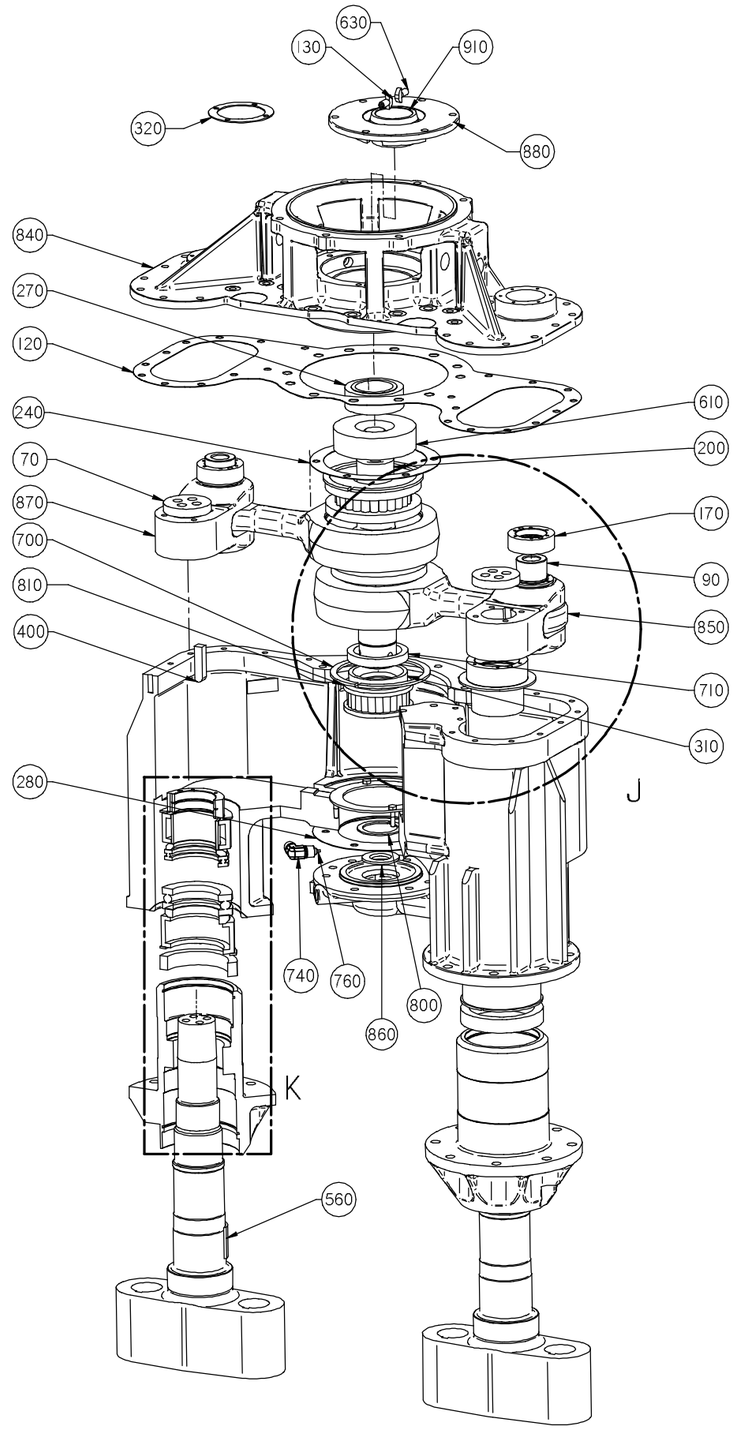

(PART #: C0607VAA_EXPLODED.asm)

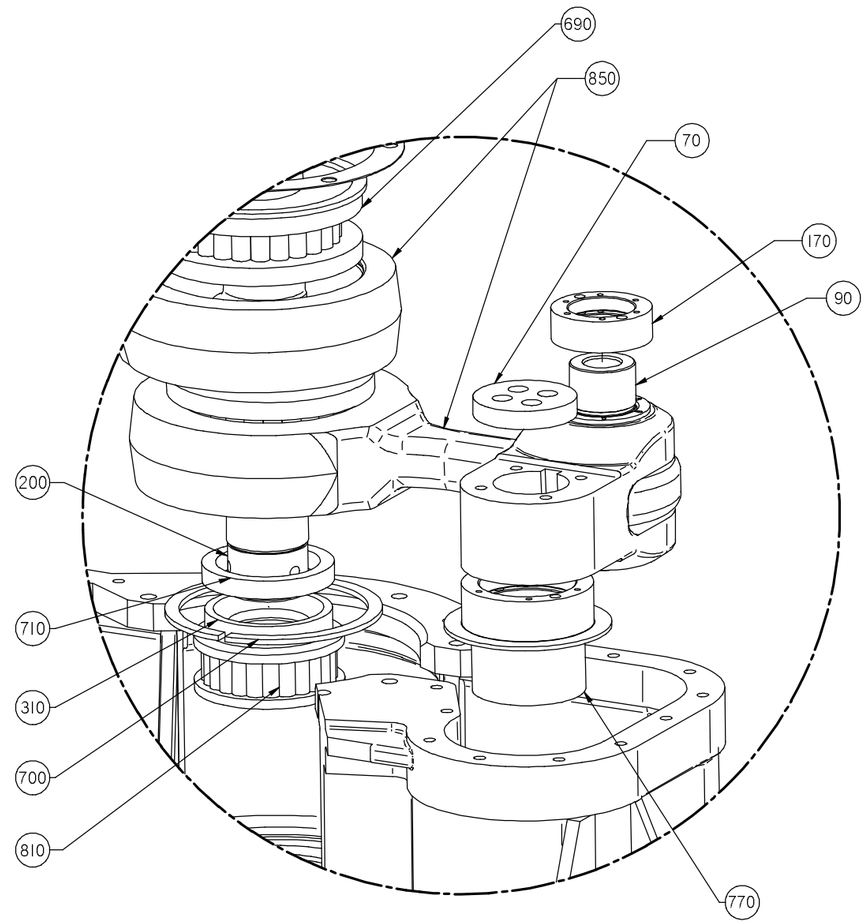

DETAIL J

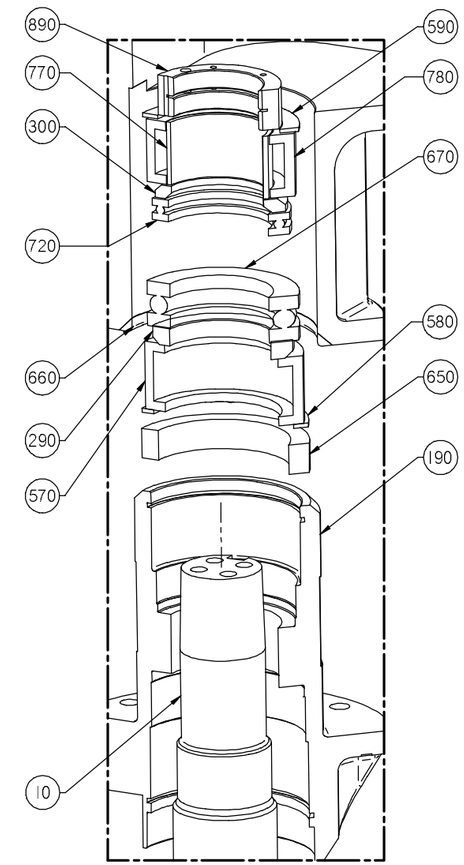

DETAIL K

SOLID EDGE DRAWING

CONFIDENTIAL

© COPYRIGHT 2001 HARSCO TRACK TECHNOLOGIES. THIS DRAWING OR DOCUMENT IS THE PROPERTY OF HARSCO TRACK TECHNOLOGIES AND EMBODIES CONFIDENTIAL INFORMATION, TRADE SECRET INFORMATION, AND/OR KNOW-HOW THAT IS THE PROPERTY OF HARSCO TRACK TECHNOLOGIES. BY ACCEPTING THIS DRAWING OR DOCUMENT, THE RECIPIENT AGREES (1) NOT TO PROVIDE, OR OTHERWISE MAKE AVAILABLE, THE DRAWING OR DOCUMENT, OR ANY INFORMATION OR KNOW-HOW EMBODIED THEREIN, TO ANY THIRD PARTY AND (2) NOT TO REPRODUCE OR USE THE DRAWING OR DOCUMENT TO MANUFACTURE ANY APPARATUS OR DEVICE, WITHOUT THE PRIOR WRITTEN AUTHORIZATION OF HARSCO TRACK TECHNOLOGIES.

IMPLIED TOLERANCES

ALL DIMENSIONS ARE IN INCHES - TOLERANCE UNLESS OTHERWISE SPECIFIED

INCH NOMINAL SIZE RANGE OVER	TO	PLUS OR MINUS 2 PLACE DECIMAL	3 PLACE DECIMAL	METRIC NOMINAL SIZE RANGE OVER	TO	PLUS OR MINUS 1 PLACE DECIMAL	2 PLACE DECIMAL
0	6	.03	.005	0	150	.5	.13
6	24	.04	.008	150	600	1.0	.20
24	-	.06	.010	-	600	1.5	.25

UNLESS OTHERWISE SPECIFIED ALL MACHINED SURFACES WILL HAVE:

A SURFACE FINISH OF 125 MICROINCHES

ANGULAR TOLERANCE OF ± 30'

CONCENTRICITY WITHIN .010

THIRD ANGLE PROJECTION

UNLESS OTHERWISE SPECIFIED ALL WELDS SHOULD ADHERE TO THE LATEST HTT WELDING SPECIFICATION 101

CHANGE	R/L	REVISION	DATE
ECN-106368	J	SE-DRAFT VERSION CREATED	09-16-10
EC500680	K	ADDED NEW ITEM# 180 (VIBRATOR ASSY NAMEPLATE)	03-15-11
		REARRANGED ITEM # TO MATCH WITH TEAMCENTER	
EC501193	L	ITEM 20 WAS 4012702	05-20-11

Description: VIBRATOR ASSEMBLY

Drawing Number: ———————

Machine Type: MARK IV

Model: C0607VAA.asm

Drawn: shol — Date Drawn: 16 Sep 10

Weight: 822.4 lbm — Scale: 1:4 — APVD Dwg: BPA — APVD Chkng: HW

Mat'l: - -

HARSCO RAIL

Part Number: C0607VAA — Size: D — Sheet: 2 of 5

Plotted by hwiggins on 5/20/2011 C0607VAA.dft

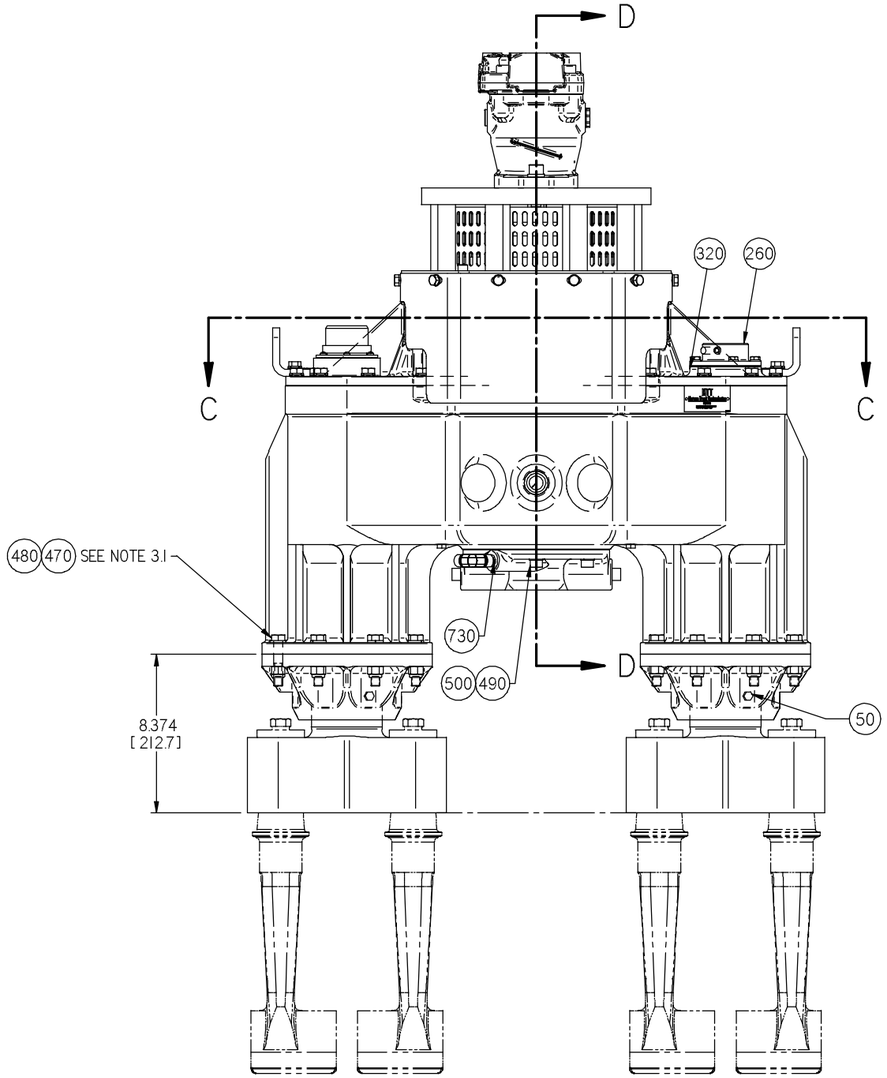

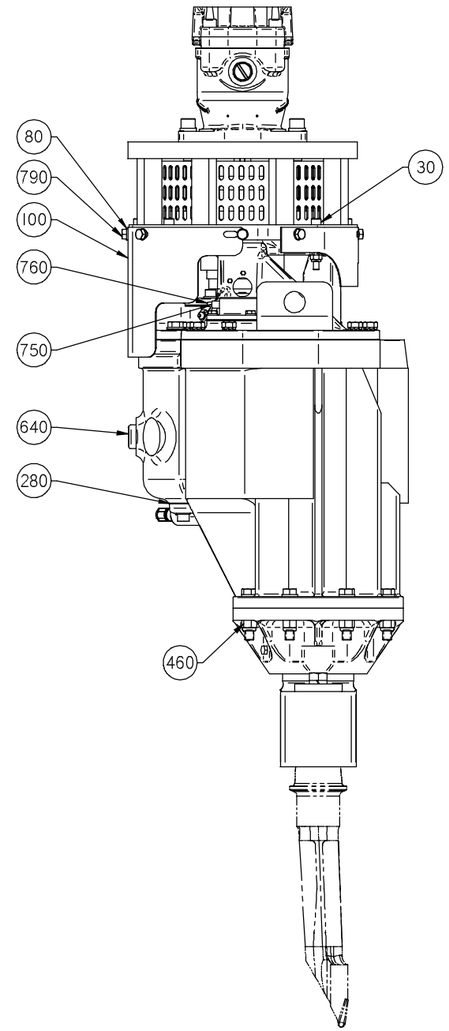

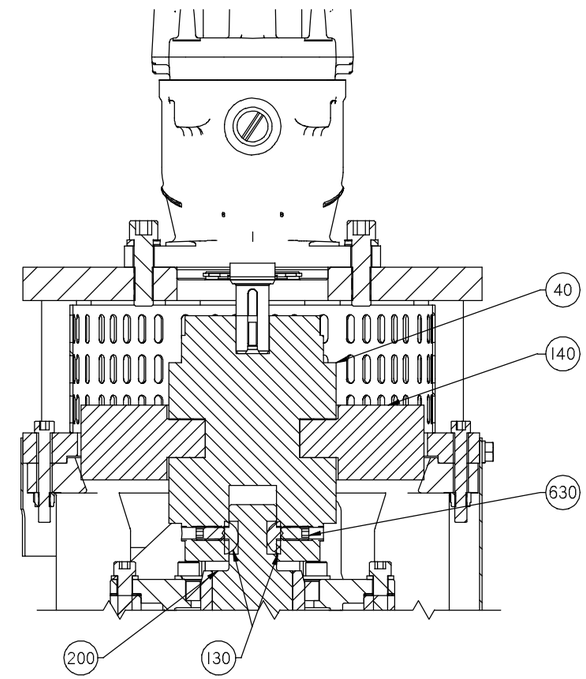

SECTION D-D

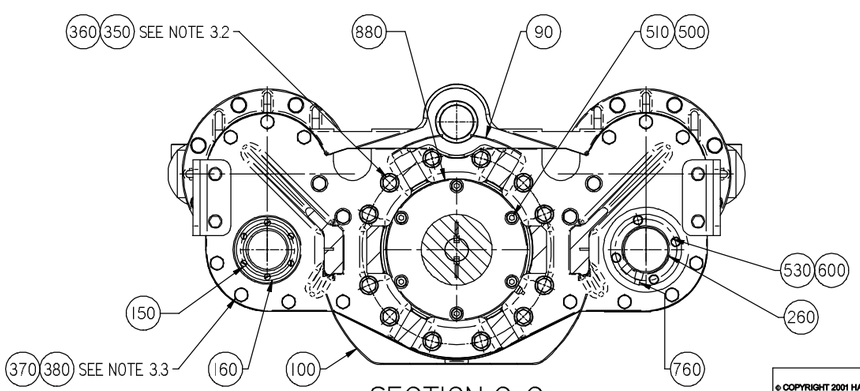

SECTION C-C

NOTES:

1. TORQUE TO 85 FT-LBS (115.3 N-m).
2. TORQUE TO APPROXIMATELY 115 FT-LBS (155.9 N-m)
3. TORQUE TO 32-35 FT-LBS (43.4-47.5 N-m).

CONFIDENTIAL

© COPYRIGHT 2001 HARSCO TRACK TECHNOLOGIES. THIS DRAWING OR DOCUMENT IS THE PROPERTY OF HARSCO TRACK TECHNOLOGIES AND EMBODIES CONFIDENTIAL INFORMATION, TRADE SECRET INFORMATION, AND/OR KNOW-HOW THAT IS THE PROPERTY OF HARSCO TRACK TECHNOLOGIES. BY ACCEPTING THIS DRAWING OR DOCUMENT, THE RECIPIENT AGREES (1) NOT TO PROVIDE, OR OTHERWISE MAKE AVAILABLE, THE DRAWING OR DOCUMENT, OR ANY INFORMATION OR KNOW-HOW EMBODIED THEREIN, TO ANY THIRD PARTY AND (2) NOT TO REPRODUCE OR USE THE DRAWING OR DOCUMENT TO MANUFACTURE ANY APPARATUS OR DEVICE, WITHOUT THE PRIOR WRITTEN AUTHORIZATION OF HARSCO TRACK TECHNOLOGIES.

SOLID EDGE DRAWING

IMPLIED TOLERANCES

ALL DIMENSIONS ARE IN INCHES - TOLERANCE UNLESS OTHERWISE SPECIFIED

NOMINAL SIZE RANGE OVER	TO	INCH PLUS OR MINUS 2 PLACE DECIMAL	3 PLACE DECIMAL	NOMINAL SIZE RANGE OVER	TO	METRIC PLUS OR MINUS 1 PLACE DECIMAL	2 PLACE DECIMAL
0	6	.03	.005	0	150	.8	.13
6	24	.04	.008	150	600	1.0	.20
24	-	.06	.010	-	600	1.5	.25

UNLESS OTHERWISE SPECIFIED ALL MACHINED SURFACES WILL HAVE:
A SURFACE FINISH OF 125 MICROINCHES
ANGULAR TOLERANCE OF +-.50°
CONCENTRICITY WITHIN .010

THIRD ANGLE PROJECTION

UNLESS OTHERWISE SPECIFIED ALL WELDS SHOULD ADHERE TO THE LATEST HTT WELDING SPECIFICATION 101

CHANGE	R/L	REVISION	DATE
ECN-106368	J	SE-DRAFT VERSION CREATED	09-16-10
EC500680	K	ADDED NEW ITEM# 180 (VIBRATOR ASSY NAMEPLATE)	03-15-11
		REARRANGED ITEM # TO MATCH WITH TEAMCENTER	
EC501193	L	ITEM 20 WAS 4012702	05-20-11

Description: VIBRATOR ASSEMBLY

Drawing Number: ---

Machine Type: MARK IV

Model: C0607VAA.asm

Weight: 822.4 lbm

Scale: 1:4

Drawn: shol — Date Drawn: 16 Sep 10

APVD Dwg: BPA — APVD Dwg: HW

Mat'l: - -

HARSCO RAIL

Part Number: C0607VAA — Size: D — Sheet: 3 of 5

Plotted by hwiggins on 5/20/2011 C0607VAA.dft

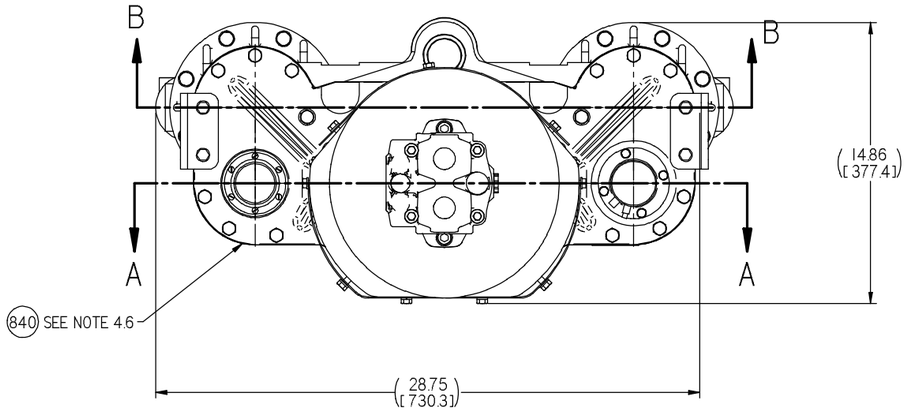

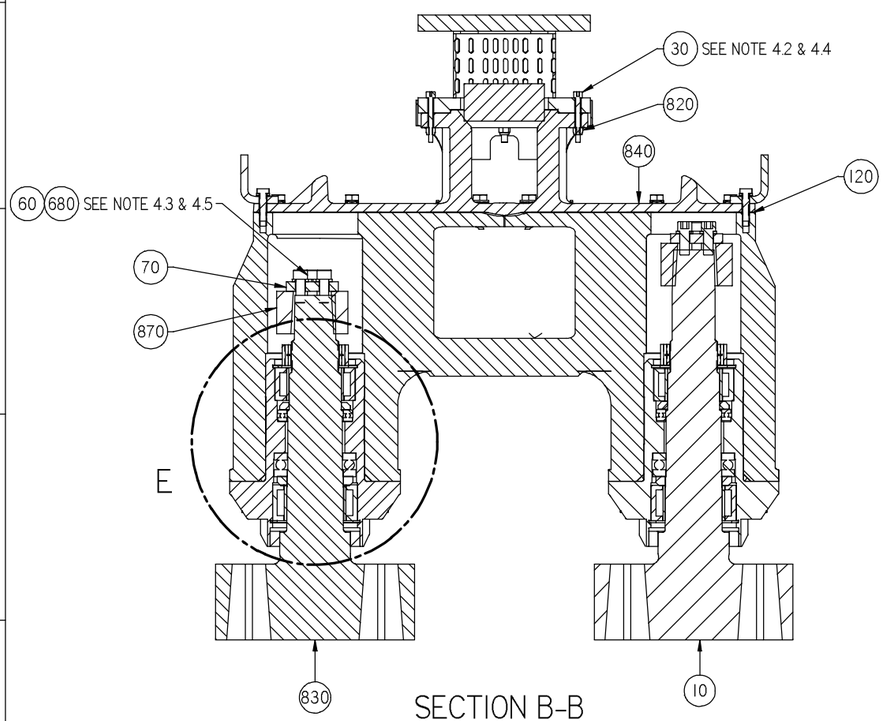

SECTION B-B

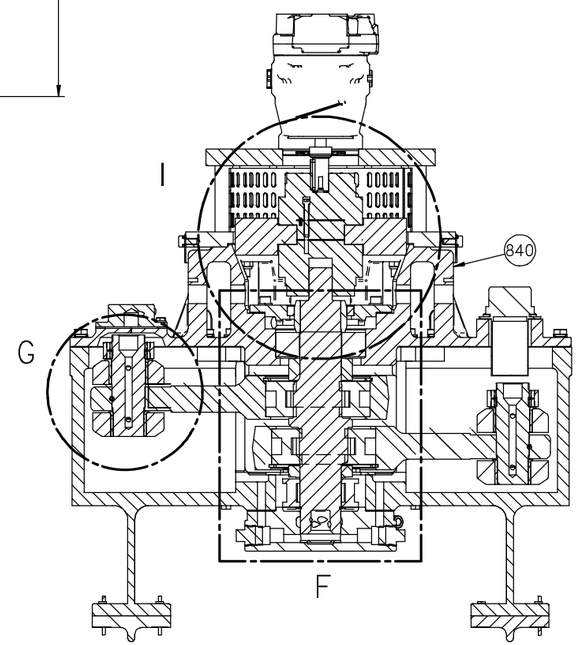

SECTION A-A

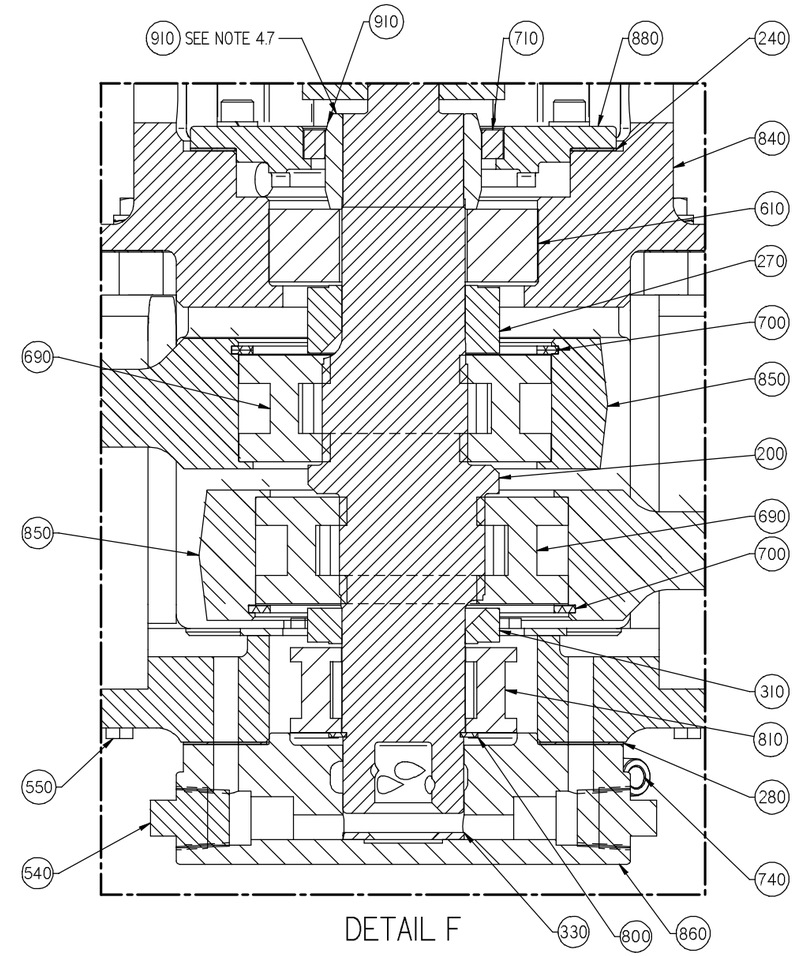

DETAIL F

NOTES:

1. TORQUE TO APPROXIMATELY 115 FT-LBS (155.9 N-m).
2. TORQUE TO 45-50 FT-LBS (61.0-67.8 N-m).
3. TORQUE TO 90 FT-LBS (122.0 N-m).
4. IT IS IMPORTANT THAT ONLY GRADE 8 SOCKET HEAD CAPSCREWS, 60MM LONG, BE USED HERE.
5. ADD LOCTITE (P/N 0-3040000-0-07).
6. ADJUST HEIGHT OF FAN TO ALLOW APPROXIMATELY 1/16" CLEARANCE BETWEEN FAN AND HOUSING COVER.
7. INSTALL COUPLING HALF, "A1", FLUSH AGAINST COUPLING SPACER, IT-910.

SOLID EDGE DRAWING

CONFIDENTIAL

© COPYRIGHT 2001 HARSCO TRACK TECHNOLOGIES. THIS DRAWING OR DOCUMENT IS THE PROPERTY OF HARSCO TRACK TECHNOLOGIES AND EMBODIES CONFIDENTIAL INFORMATION, TRADE SECRET INFORMATION, AND/OR KNOW-HOW THAT IS THE PROPERTY OF HARSCO TRACK TECHNOLOGIES. BY ACCEPTING THIS DRAWING OR DOCUMENT, THE RECIPIENT AGREES (1) NOT TO PROVIDE, OR OTHERWISE MAKE AVAILABLE, THE DRAWING OR DOCUMENT, OR ANY INFORMATION OR KNOW-HOW EMBODIED THEREIN, TO ANY THIRD PARTY AND (2) NOT TO REPRODUCE OR USE THE DRAWING OR DOCUMENT TO MANUFACTURE ANY APPARATUS OR DEVICE, WITHOUT THE PRIOR WRITTEN AUTHORIZATION OF HARSCO TRACK TECHNOLOGIES.

IMPLIED TOLERANCES

ALL DIMENSIONS ARE IN INCHES - TOLERANCE UNLESS OTHERWISE SPECIFIED

NOMINAL SIZE RANGE OVER	TO	INCH PLUS OR MINUS 2 PLACE DECIMAL	3 PLACE DECIMAL	NOMINAL SIZE RANGE OVER	TO	METRIC PLUS OR MINUS 1 PLACE DECIMAL	2 PLACE DECIMAL
0	6	.03	.005	0	150	.5	.13
6	24	.04	.008	150	600	1.0	.20
24	-	.06	.010	-	600	1.5	.25

UNLESS OTHERWISE SPECIFIED ALL MACHINED SURFACES WILL HAVE:
A SURFACE FINISH OF 125 MICROINCHES AVERAGE, TOLERANCE OF +-.001" CONCENTRICITY WITHIN .010

THIRD ANGLE PROJECTION

UNLESS OTHERWISE SPECIFIED ALL WELDS SHOULD ADHERE TO THE LATEST HTT WELDING SPECIFICATION 101

CHANGE	R/L	REVISION	DATE
ECN-106368	J	SE-DRAFT VERSION CREATED	09-16-10
EC500680	K	ADDED NEW ITEM# 180 (VIBRATOR ASSY NAMEPLATE)	03-15-11
		REARRANGED ITEM # TO MATCH WITH TEAMCENTER	
EC501193	L	ITEM 20 WAS 4012702	05-20-11

Description: VIBRATOR ASSEMBLY

Drawing Number:

Model: C0607VAA.asm

Weight: 822.4 lbm

Scale: 1:4

Machine Type: MARK IV

Drawn: shol

Date Drawn: 16 Sep 10

APVD Dwg: BPA

APVD Dtlng: HW

MatrT: - -

HARSCO RAIL

Part Number: C0607VAA

Size: D

Sheet: 4 of 5

Plotted by hwiggins on 5/20/2011 C0607VAA.dft

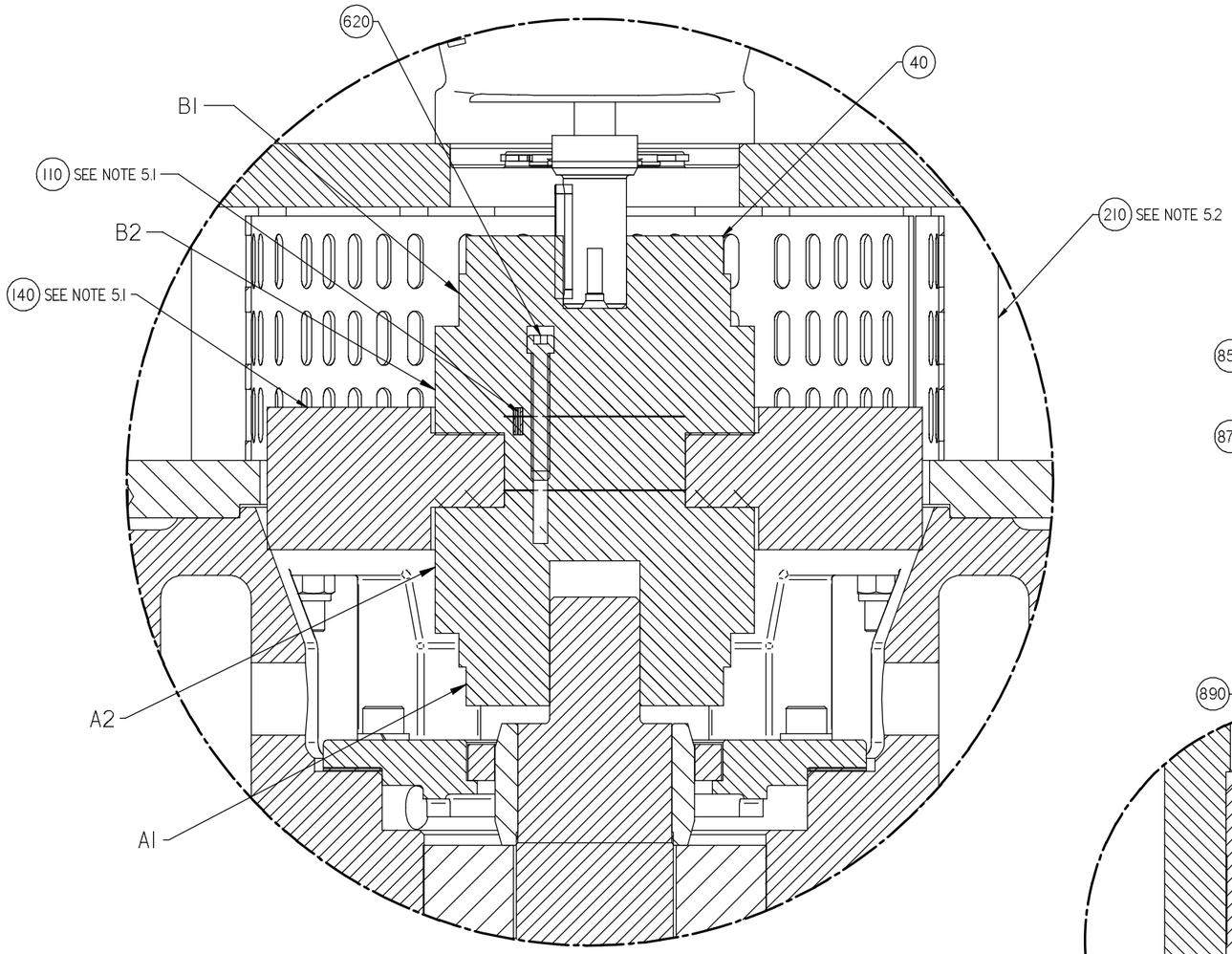

DETAIL I

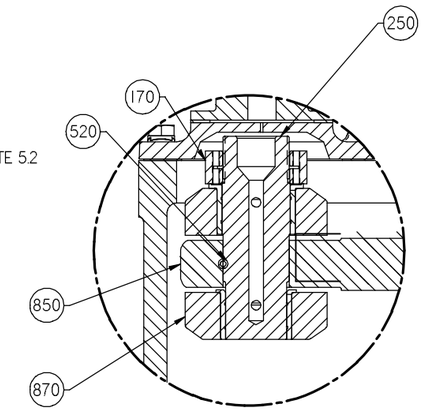

DETAIL G

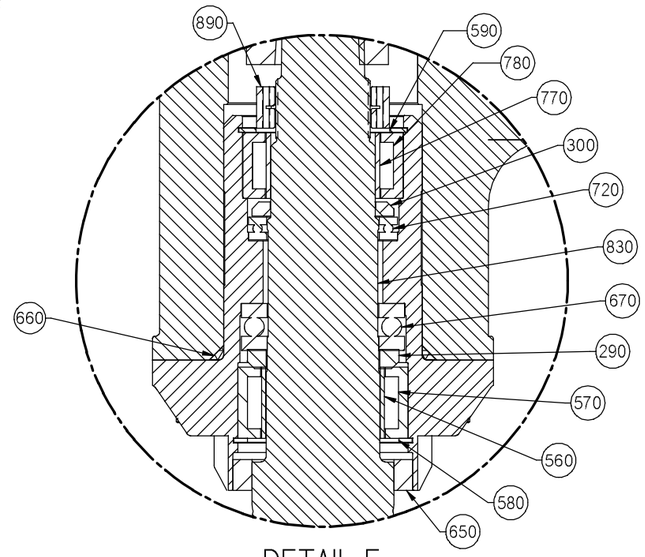

DETAIL E

NOTES:

1. GENERAL INSTRUCTIONS FOR FITTING LOCKNUTS:
1-A. WITH CLAMPING SCREWS LOOSENED, SCREW LOCKNUT ONTO SHAFT WITHIN 0.25 INCH OF SEATING SURFACE.
1-B. TIGHTEN CLAMPING SCREWS UNIFORMLY AND IN CROSSWISE FASHION WHILE TURNING LOCKNUT UNTIL A SNUG FIT INDICATES NEAR ELIMINATION OF THREAD CLEARANCE. (3-5 FT-LBS [4.07-6.78 N-m] TORQUE).
1-C. BRING LOCKNUT DOWN TO SEATING SURFACE AND ADJUST CLAMPING SCREWS IN CROSSWISE FASHION TO VALUES SHOWN BELOW.

LOCKNUT POSITION	LOCKNUT TORQUE	CLAMP SCREW TORQUE
FORK LINK	TIGHTEN TO ELIMINATE PLAY IN CONNECTING ROD, BACK OFF 1/4 TURN	25 IN-LBS (2.82 N-m)
VIBRATOR SHAFT	PRE-LOAD THRUST BEARINGS TO 48 LBS IN DRAG	40 IN-LBS (4.52 N-m)

2. ADD LOCTITE (P/N 0-3040000-0-07)
3. 3/8 DRILL THROUGH ECCENTRIC CONNECTING ROD, IT-850, AND VIBRATOR PIN, IT-250, AT ASSEMBLY (2 PLACES) LOCATE HOLE FROM Ø 1/8 HOLE PREDRILLED IN ECCENTRIC CONNECTING ROD.

INSTALLATION PROCEDURES FOR FAN:
1. FIT ROLL PIN, IT-110 , FLUSH WITH ELEMENT SIDE OF COUPLING HALF, "B2", AND ASSEMBLY FAN BLADES, IT-140, BETWEEN COUPLING HALVES, "A2" AND "B2", WITH LOCTITE AT SCREWS, IT-620, (SCREWS MUST NOT PROJECT THROUGH COUPLING HALF).
2. BOLT THE HYDRAULIC MOTOR, IT-20, TO ADAPTER, IT-210. BEFORE INSTALLING COUPLING HALF, "B1" (WITH BUSHING) TO BE FLUSH WITH THE END OF THE MOTOR SHAFT.
3. INSTALL FLEXIBLE ELEMENTS AND THE FAN ASSEMBLY.
4. BEFORE INSTALLING AIR SHROUDS, CHECK FOR COUPLING END FLOAT: 0.030 - 0.050 (ADJUST PROJECTION OF MOTOR SHAFT THROUGH BUSHING, IF REQUIRED)
5. TWO EACH 3/8-16 X 5/8 SHSS FURNISHED WITH TAPER LOCK BUSHING.

SOLID EDGE DRAWING

CONFIDENTIAL
© COPYRIGHT 2001 HARSCO TRACK TECHNOLOGIES. THIS DRAWING OR DOCUMENT IS THE PROPERTY OF HARSCO TRACK TECHNOLOGIES AND EMBODIES CONFIDENTIAL INFORMATION, TRADE SECRET INFORMATION, AND/OR KNOW-HOW THAT IS THE PROPERTY OF HARSCO TRACK TECHNOLOGIES. BY ACCEPTING THIS DRAWING OR DOCUMENT, THE RECIPIENT AGREES (1) NOT TO PROVIDE, OR OTHERWISE MAKE AVAILABLE, THE DRAWING OR DOCUMENT, OR ANY INFORMATION OR KNOW-HOW EMBODIED THEREIN, TO ANY THIRD PARTY AND (2) NOT TO REPRODUCE OR USE THE DRAWING OR DOCUMENT TO MANUFACTURE ANY APPARATUS OR DEVICE, WITHOUT THE PRIOR WRITTEN AUTHORIZATION OF HARSCO TRACK TECHNOLOGIES.

IMPLIED TOLERANCES
ALL DIMENSIONS ARE IN INCHES - TOLERANCE UNLESS OTHERWISE SPECIFIED

NOMINAL SIZE RANGE OVER	TO	INCH 2 PLACE DECIMAL	INCH 3 PLACE DECIMAL	NOMINAL SIZE RANGE OVER	TO	METRIC 1 PLACE DECIMAL	METRIC 2 PLACE DECIMAL
0	6	.03	.005	0	150	.8	.13
6	24	.04	.008	150	600	1.0	.20
24	-	.06	.010	-	600	1.5	.25

INCH: PLUS OR MINUS
METRIC: PLUS OR MINUS

UNLESS OTHERWISE SPECIFIED ALL MACHINED SURFACES WILL HAVE A SURFACE FINISH OF 125 MICROINCHES ANGULAR TOLERANCE OF +-.25° CONCENTRICITY WITHIN .010

THIRD ANGLE PROJECTION

UNLESS OTHERWISE SPECIFIED ALL WELDS SHOULD ADHERE TO THE LATEST HTT WELDING SPECIFICATION 101

CHANGE	R/L	REVISION	DATE
ECN-106368	J	SE-DRAFT VERSION CREATED	09-16-10
EC500680	K	ADDED NEW ITEM# 180 (VIBRATOR ASSY NAMEPLATE)	03-15-11
		REARRANGED ITEM # TO MATCH WITH TEAMCENTER	
EC501193	L	ITEM 20 WAS 4012702	05-20-11

Description: VIBRATOR ASSEMBLY
Drawing Number:
Machine Type: MARK IV
Model: C0607VAA.asm
Drawn: shol 16 Sep 10
Weight: 822.4 lbm
Scale: 1:4
APVD Dwg: BPA
APVD Ctlbg: HW
Mat'l: - -

HARSCO RAIL

Part Number: C0607VAA
Size: D
Sheet: 5 of 5

Plotted by hwiggins on 5/20/2011 C0607VAA.dft

CONFIDENTIAL
© COPYRIGHT 2009 HARSCO. THIS DRAWING OR DOCUMENT IS THE PROPERTY OF HARSCO AND EMBODIES CONFIDENTIAL INFORMATION, TRADE SECRET INFORMATION, AND/OR KNOW-HOW THAT IS THE PROPERTY OF HARSCO. BY ACCEPTING THIS DRAWING OR DOCUMENT, THE RECIPIENT AGREES (1) NOT TO PROVIDE, OR OTHERWISE MAKE AVAILABLE, THE DRAWING OR DOCUMENT, OR ANY INFORMATION OR KNOW-HOW EMBODIED THEREIN, TO ANY THIRD PARTY AND (2) NOT TO REPRODUCE OR USE THE DRAWING OR DOCUMENT TO MANUFACTURE ANY APPARATUS OR DEVICE, WITHOUT THE PRIOR WRITTEN AUTHORIZATION OF HARSCO.

SOLID EDGE DRAWING

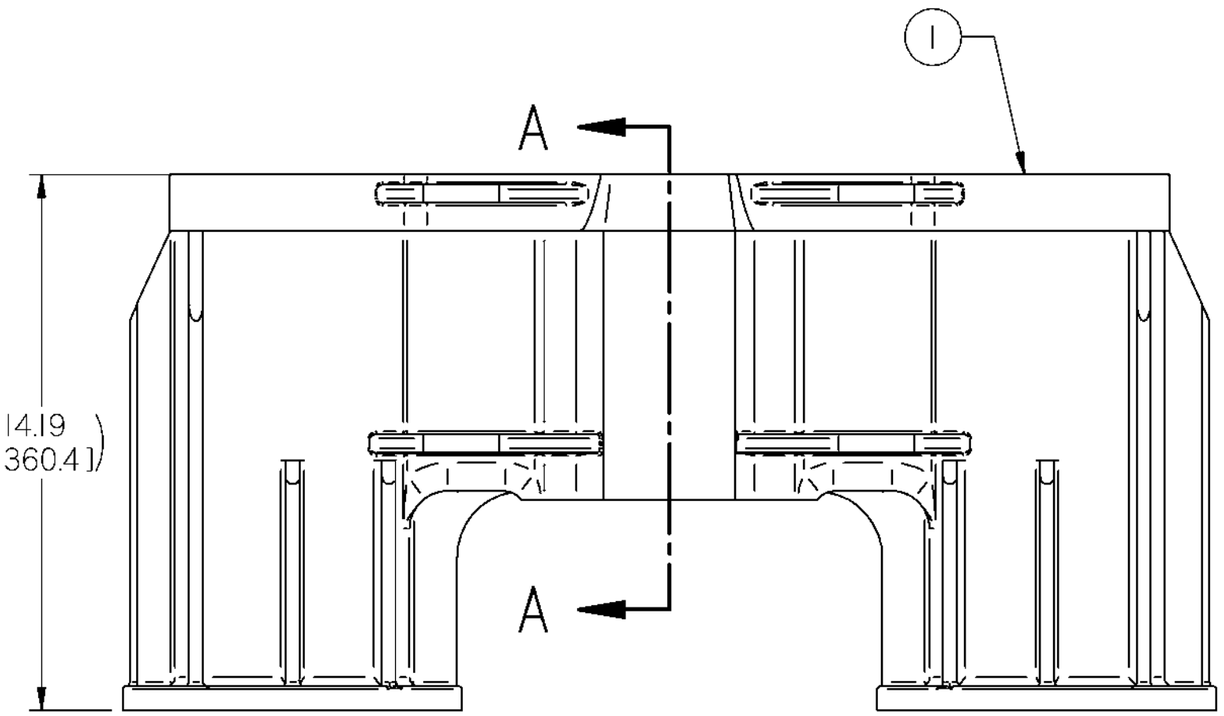

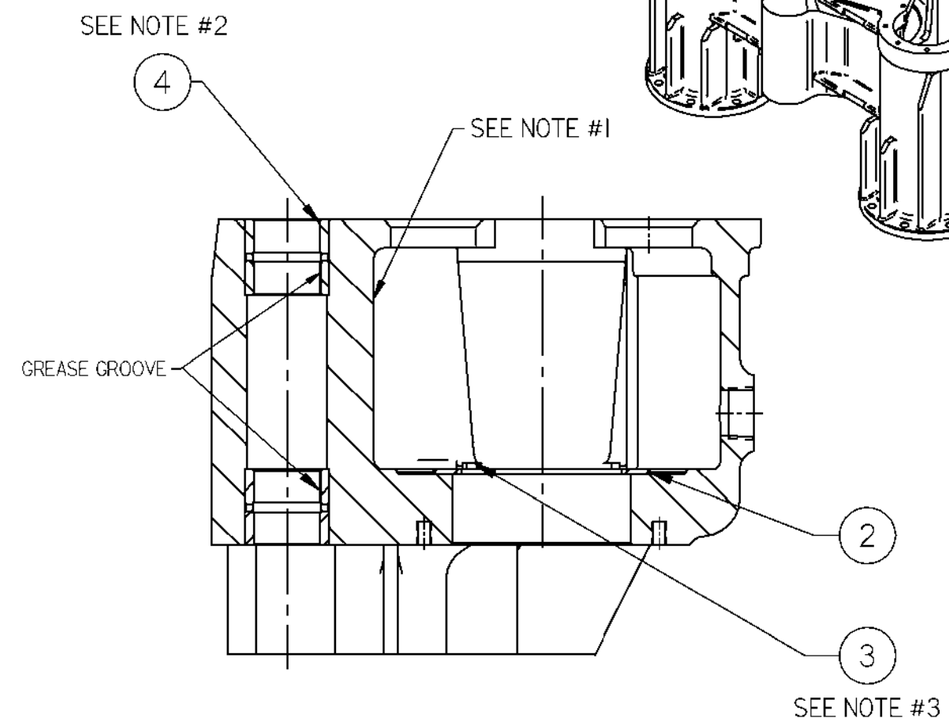

SECTION A-A

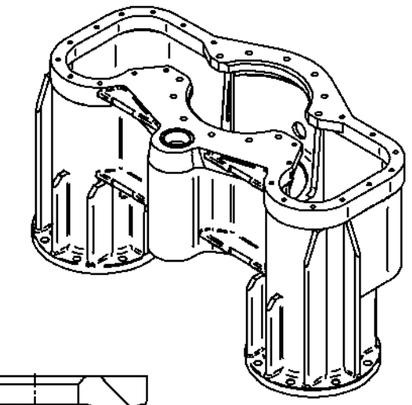

ITEM	PART NO	DESCRIPTION	QTY
4	B7487Y01	STEEL BUSHING	2
3	A0036001	1/4-20 x 1/2 HHSC	4
2	Z682424	BEARING RETAINER	1
1	W68347-02	VIBRATOR HOUSING MACHINING	1

NOTES:
1. PAINT INSIDE OF HOUSING-CRANKCASE ORANGE-L421513
2. ITEM # 4 TO BE PRESS FIT INTO ITEM # 1 (BOTH ENDS).
3. INSTALL USING LOCKTITE #242 (0-304000-0-06)

Inch
[mm]

IMPLIED TOLERANCES
ALL DIMENSIONS ARE IN INCHES - TOLERANCE UNLESS OTHERWISE SPECIFIED

NOMINAL SIZE RANGE		INCH PLUS OR MINUS		NOMINAL SIZE RANGE		METRIC PLUS OR MINUS	
OVER	TO	2 PLACE DECIMAL	3 PLACE DECIMAL	OVER	TO	1 PLACE DECIMAL	2 PLACE DECIMAL
0	6	.03	.005	0	150	.8	.13
6	24	.04	.008	150	600	1.0	.20
24	-	.06	.010	600	-	1.5	.25

UNLESS OTHERWISE SPECIFIED, ALL MACHINED SURFACES WILL HAVE:
A SURFACE FINISH OF 125 MICROINCHES
ANGULAR TOLERANCE OF ± 50'
CONCENTRICITY WITHIN .010

THIRD ANGLE PROJECTION

UNLESS OTHERWISE SPECIFIED ALL WELDS SHOULD ADHERE TO THE MOST CURRENT A.W.S WELDING STANDARDS

CHANGE	R/L	REVISION	DATE
ECN-106368	1	SE-DRAFT VERSION CREATED	09-02-10

Description: VIBRATOR HOUSING ASSEMBLY
Drawing Number: ----------
Machine Type: MARK IV
Model: 0-2200082-0-01.asm
Drawn: shol
Date Drawn: 02 Sep 10
Weight: 258.4 lbm
Scale: 1:4
APVD Desg: BPA
APVD ChEng: HW
Mat'l

HARSCO RAIL

Part Number: 0-2200082-0-01
Size: B
Sheet: 1 of 1

Plotted by SHOL on 10/13/2010 0-2200082-0-01.dft

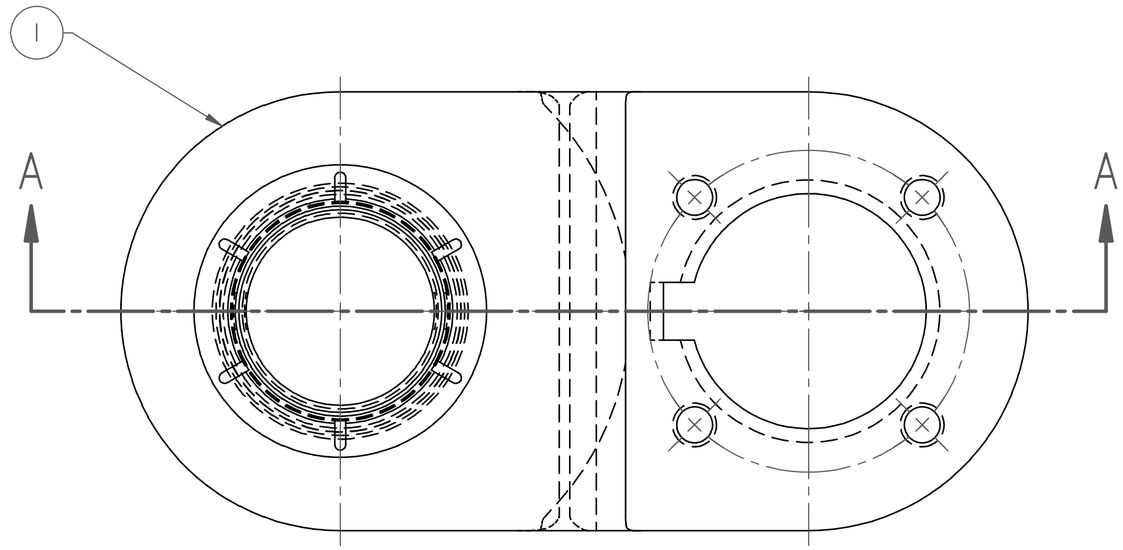

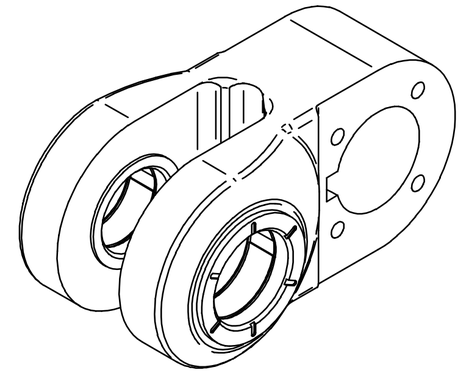

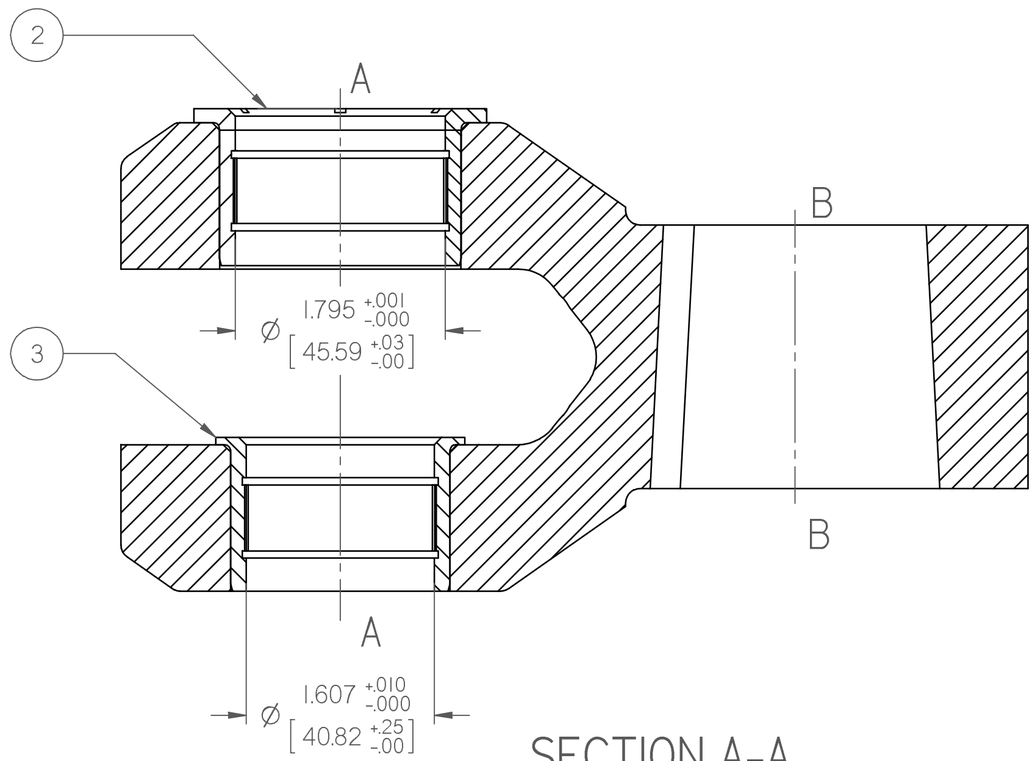

SECTION A-A

ITEM	PART NO	DESCRIPTION	QTY
3	Z68322-01	VIBRATOR BUSHING,LOWER	1
2	Z68316-01	VIBRATOR BUSHING,UPPER	1
1	X68298-01	VIBRATOR FORK LINK	1

NOTES:
1. ALIGN AXIAL GROOVES IN BOTH BUSHINGS.
2. LINE REAM ITEM 2 & 3 Ø 1.795 +.010/-.000 AND Ø 1.607 +.010/ -.000 RESPECTIVELY.
3. AXIS "A-A" SHOULD BE PARALLEL TO "B-B" WITHIN .002 (MEASURED ACROSS FULL FORK WIDTH).

Inch
[mm]

SOLID EDGE DRAWING

CONFIDENTIAL
© COPYRIGHT 2009 HARSCO. THIS DRAWING OR DOCUMENT IS THE PROPERTY OF HARSCO AND EMBODIES CONFIDENTIAL INFORMATION, TRADE SECRET INFORMATION, AND/OR KNOW-HOW THAT IS THE PROPERTY OF HARSCO. BY ACCEPTING THIS DRAWING OR DOCUMENT, THE RECIPIENT AGREES (1) NOT TO PROVIDE, OR OTHERWISE MAKE AVAILABLE, THE DRAWING OR DOCUMENT, OR ANY INFORMATION OR KNOW-HOW EMBODIED THEREIN, TO ANY THIRD PARTY AND (2) NOT TO REPRODUCE OR USE THE DRAWING OR DOCUMENT TO MANUFACTURE ANY APPARATUS OR DEVICE, WITHOUT THE PRIOR WRITTEN AUTHORIZATION OF HARSCO.

IMPLIED TOLERANCES
ALL DIMENSIONS ARE IN INCHES - TOLERANCE UNLESS OTHERWISE SPECIFIED

INCH NOMINAL SIZE RANGE OVER	TO	PLUS OR MINUS 2 PLACE DECIMAL	3 PLACE DECIMAL	METRIC NOMINAL SIZE RANGE OVER	TO	PLUS OR MINUS 1 PLACE DECIMAL	2 PLACE DECIMAL
0	6	.03	.005	0	150	.8	.13
6	24	.04	.008	150	600	1.0	.20
24	-	.06	.010	600	-	1.5	.25

UNLESS OTHERWISE SPECIFIED ALL MACHINED SURFACES WILL HAVE;
A SURFACE FINISH OF 125 MICROINCHES
ANGULAR TOLERANCE OF ±.50°
CONCENTRICITY WITHIN .010

THIRD ANGLE PROJECTION

UNLESS OTHERWISE SPECIFIED, ALL WELDS SHOULD ADHERE TO THE MOST CURRENT A.W.S WELDING STANDARDS

CHANGE	R/L	REVISION	DATE
ECN-106148	C	SE-DRAFT VERSION CREATED	08-05-10

Description: VIBRATOR FORK LINK ASSY
Drawing Number: ---------- VIBRATOR FORK LINK A
Machine Type:
Model: X688056.asm
Drawn: SHOL
Date Drawn: 05 Aug 10
Weight: 12.8 lbm
Scale: 1:1
APVD Desg: BPA
APVD ChEng: HW
Mat'l: - -

HARSCO RAIL

Part Number: X688056
Size: C
Sheet: 1 of 1

Plotted by shol on 2/24/2011 X688056.dft

0-3137013-0-14 STRING POT
REPAIR PARTS

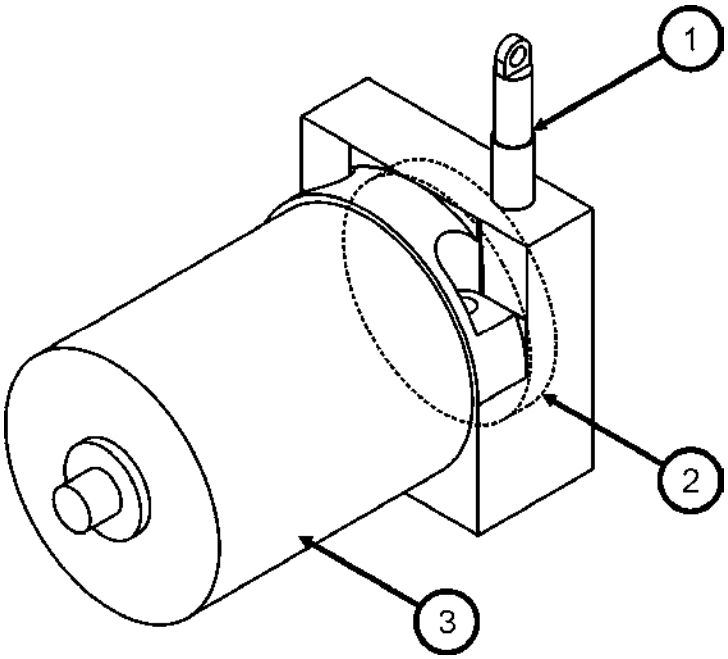

ITEM	PART NO	DESCRIPTION	QTY
	0-3137013-0-14	String Pot	1
1	G5509Y01	String Replacement	1
2	G5509Y02	Capstan (String Spool) Replacement - 5"	1
3	G5509Y03	Potentiometer Replacement	1

CONFIDENTIAL
© COPYRIGHT 2009 HARSCO. THIS DRAWING OR DOCUMENT IS THE PROPERTY OF HARSCO AND EMBODIES CONFIDENTIAL INFORMATION, TRADE SECRET INFORMATION, AND/OR KNOW-HOW THAT IS THE PROPERTY OF HARSCO. BY ACCEPTING THIS DRAWING OR DOCUMENT, THE RECIPIENT AGREES (1) NOT TO PROVIDE, OR OTHERWISE MAKE AVAILABLE, THE DRAWING OR DOCUMENT, OR ANY INFORMATION OR KNOW-HOW EMBODIED THEREIN, TO ANY THIRD PARTY AND (2) NOT TO REPRODUCE OR USE THE DRAWING OR DOCUMENT TO MANUFACTURE ANY APPARATUS OR DEVICE, WITHOUT THE PRIOR WRITTEN AUTHORIZATION OF HARSCO.

SOLID EDGE DRAWING

ITEM	PART NO	QTY	DESCRIPTION
10	PW68264K	1	SWIVEL BRACKET CASTING
20	Z68891	1	SPACER
30	B7487Y01	2	STEEL BUSHING

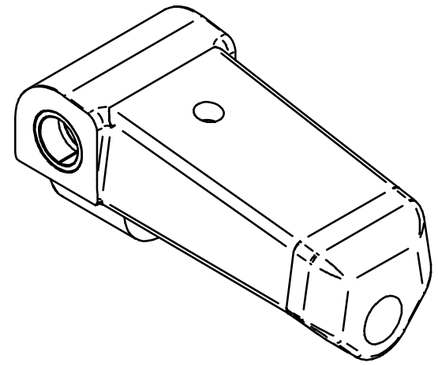

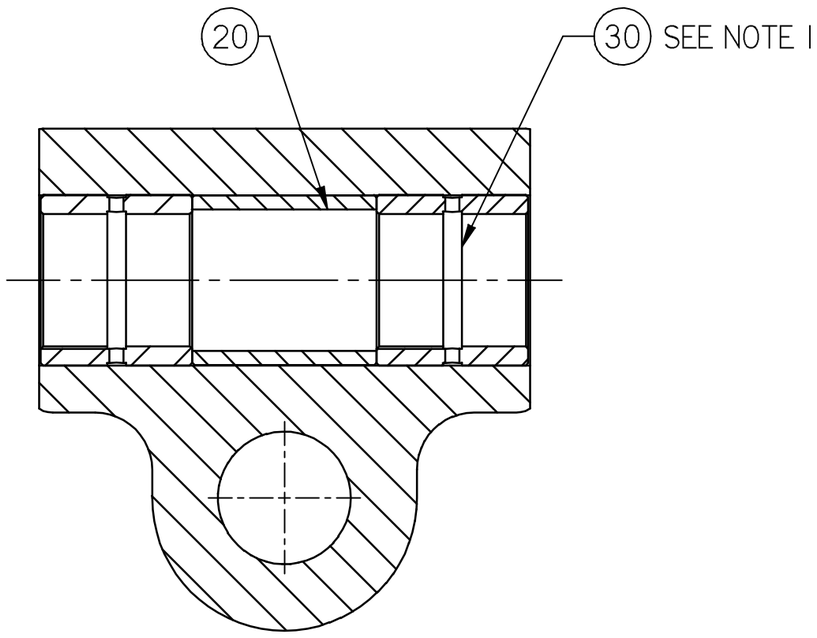

SECTION A-A

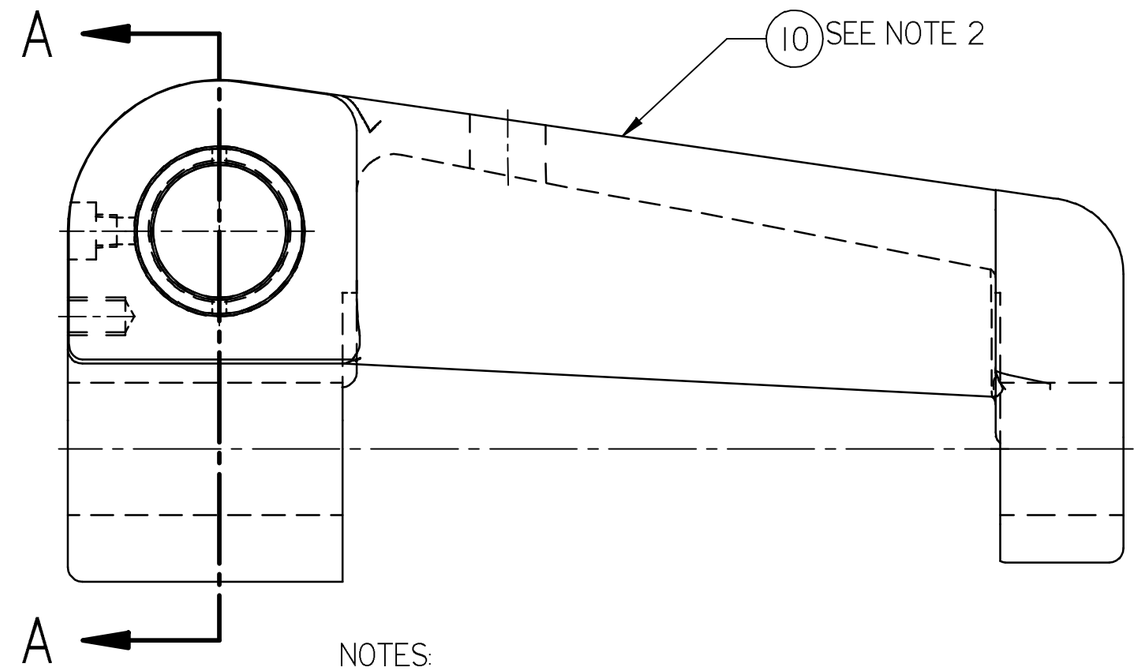

NOTES:

1. PRESS BUSHINGS (ITEM # 30) AND SPACER (ITEM # 20) IN TO PASS PIVOT SHAFT,Y68074-02
2. MACHINE SWIVEL BRACKET CASTING (ITEM # 10) PER SHEET 2.

Inch
[mm]

IMPLIED TOLERANCES
ALL DIMENSIONS ARE IN INCHES - TOLERANCE UNLESS OTHERWISE SPECIFIED

NOMINAL SIZE RANGE		INCH PLUS OR MINUS		NOMINAL SIZE RANGE		METRIC PLUS OR MINUS	
OVER	TO	2 PLACE DECIMAL	3 PLACE DECIMAL	OVER	TO	1 PLACE DECIMAL	2 PLACE DECIMAL
0	6	.03	.005	0	150	.8	.13
6	24	.04	.008	150	600	1.0	.20
24	-	.06	.010	600	-	1.5	.25

UNLESS OTHERWISE SPECIFIED, ALL MACHINED SURFACES WILL HAVE:
A SURFACE FINISH OF 125 MICROINCHES
ANGULAR TOLERANCE OF ±.50°
CONCENTRICITY WITHIN .010

THIRD ANGLE PROJECTION

UNLESS OTHERWISE SPECIFIED, ALL WELDS SHOULD ADHERE TO THE MOST CURRENT A.W.S WELDING STANDARDS

CHANGE	R/L	REVISION	DATE
ECN-106148	M	SE-DRAFT VERSION CREATED	05-27-10
EC500822	N	RE-DRAFTED	03-29-11

Description: **SWIVEL BRACKET ASSY**

Drawing Number: ----------
Machine Type: MARK IV
Model: Y684448-01.asm
Drawn: shol
Date Drawn: 27 May 10
Weight: 54.6 lbm
Scale: 1:2
APVD Desg: BPA
APVD ChEng: HW
Mat'l:

HARSCO RAIL

Part Number: Y684448-01
Size: B
Sheet: 1 of 2

Plotted by shol on 3/31/2011 Y684448-01.dft

CONFIDENTIAL
© COPYRIGHT 2009 HARSCO. THIS DRAWING OR DOCUMENT IS THE PROPERTY OF HARSCO AND EMBODIES CONFIDENTIAL INFORMATION, TRADE SECRET INFORMATION, AND/OR KNOW-HOW THAT IS THE PROPERTY OF HARSCO. BY ACCEPTING THIS DRAWING OR DOCUMENT, THE RECIPIENT AGREES (1) NOT TO PROVIDE, OR OTHERWISE MAKE AVAILABLE, THE DRAWING OR DOCUMENT, OR ANY INFORMATION OR KNOW-HOW EMBODIED THEREIN, TO ANY THIRD PARTY AND (2) NOT TO REPRODUCE OR USE THE DRAWING OR DOCUMENT TO MANUFACTURE ANY APPARATUS OR DEVICE, WITHOUT THE PRIOR WRITTEN AUTHORIZATION OF HARSCO.

SOLID EDGE DRAWING

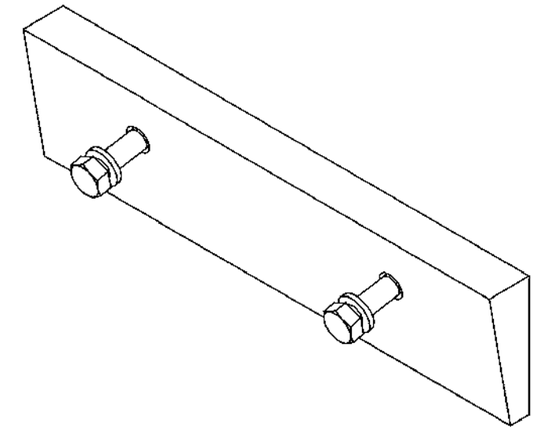

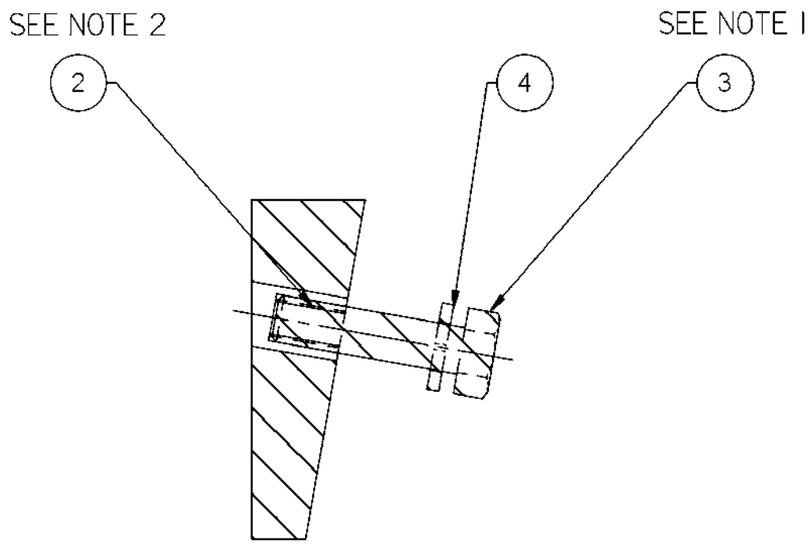

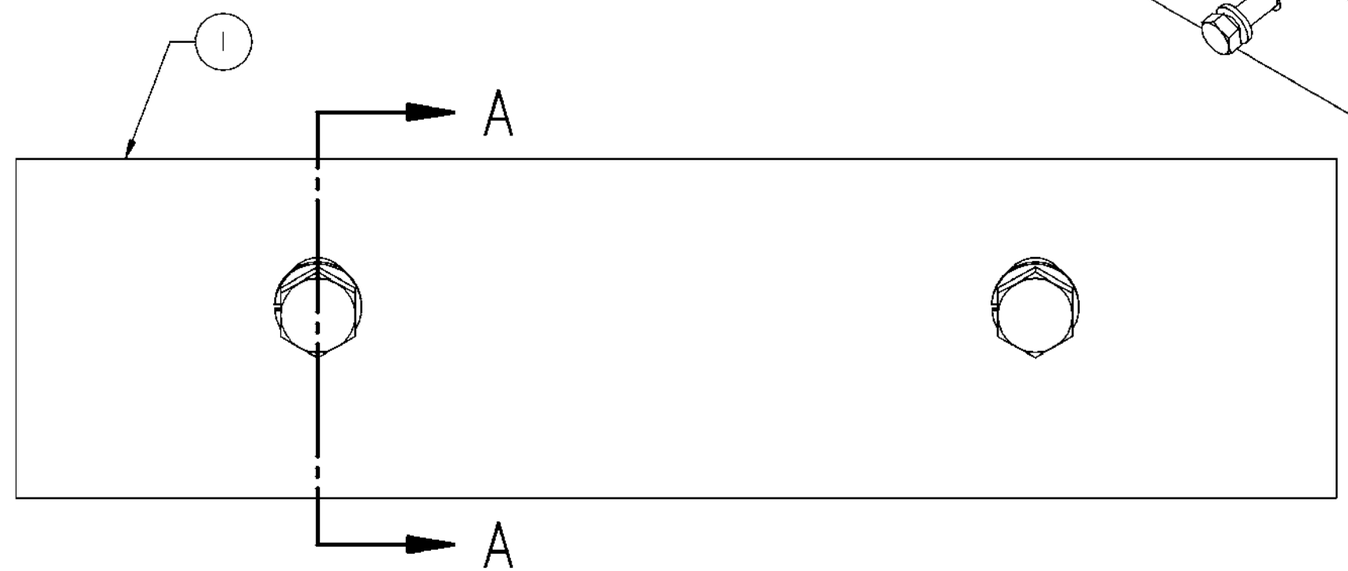

SECTION A-A

Item Number	Document Number	Title	Quantity
4	F009546	5/16 LOCK WASHER	2
3	F001113	5/16-18 X 1 1/4 HEX HD CAP SCREW	2
2	B0753Y01	THREADED INSERT	2
1	0-1304826-0-03	STOP PAD	1

NOTE:
1. DO NOT TIGHTEN SCREWS
2. FLUSH WITH THE STOP PAD

Inch
[mm]

IMPLIED TOLERANCES
ALL DIMENSIONS ARE IN INCHES - TOLERANCE UNLESS OTHERWISE SPECIFIED

NOMINAL SIZE RANGE		INCH PLUS OR MINUS		NOMINAL SIZE RANGE		METRIC PLUS OR MINUS	
OVER	TO	2 PLACE DECIMAL	3 PLACE DECIMAL	OVER	TO	1 PLACE DECIMAL	2 PLACE DECIMAL
0	6	.03	.005	0	150	.8	.13
6	24	.04	.008	150	600	1.0	.20
24	-	.06	.010	600	-	1.5	.25

UNLESS OTHERWISE SPECIFIED, ALL MACHINED SURFACES WILL HAVE:
A SURFACE FINISH OF 125 MICROINCHES
ANGULAR TOLERANCE OF ± 50'
CONCENTRICITY WITHIN .010

THIRD ANGLE PROJECTION

UNLESS OTHERWISE SPECIFIED, ALL WELDS SHOULD ADHERE TO THE MOST CURRENT A.W.S WELDING STANDARDS

CHANGE	R/L	REVISION	DATE
ECN-106215	C	SE-DRAFT VERSION CREATED	06-03-10

Description: STOP PAD ASSEMBLY
Drawing Number: ----------
Machine Type: MARK IV
Model: G0850YAA.asm
Drawn: shol
Date Drawn: 03 Jun 10
Weight: 0.6 lbm
Scale: 1:1
APVD Desg: BPA
APVD ChEng: HW
Mat'l:

HARSCO RAIL

Part Number: G0850YAA
Size: B
Sheet: 1 of 1

Plotted by shol on 6/3/2010 G0850YAA.dft

ITEM	PART NO	QTY	DESCRIPTION
10	B5760Y01	1	ROD CAP
20	X769790-002	1	ROD BUSHING
30	0-3015001-0-14	1	DOWEL PIN (JRE)
40	B5457X01	1	PISTON, 2.5" X 1/5"
50	0-1202574-0-02	1	PISTON ROD, 1 1/2 DIA
60	0-2100760-1-03	1	2 1/2" CYLINDER BODY ASSY
70	B5428YAA	1	SEAL KIT - 2 1/2" CYL
80*	A0062022	1	5/16-18X3/4 SHSSCR CUP

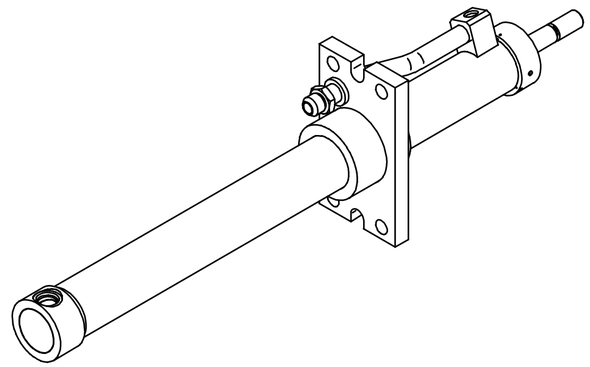

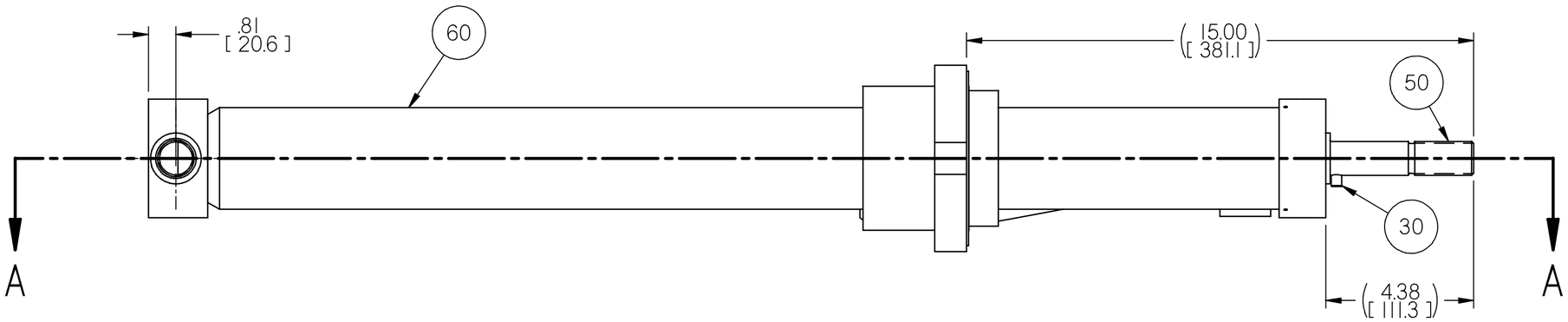

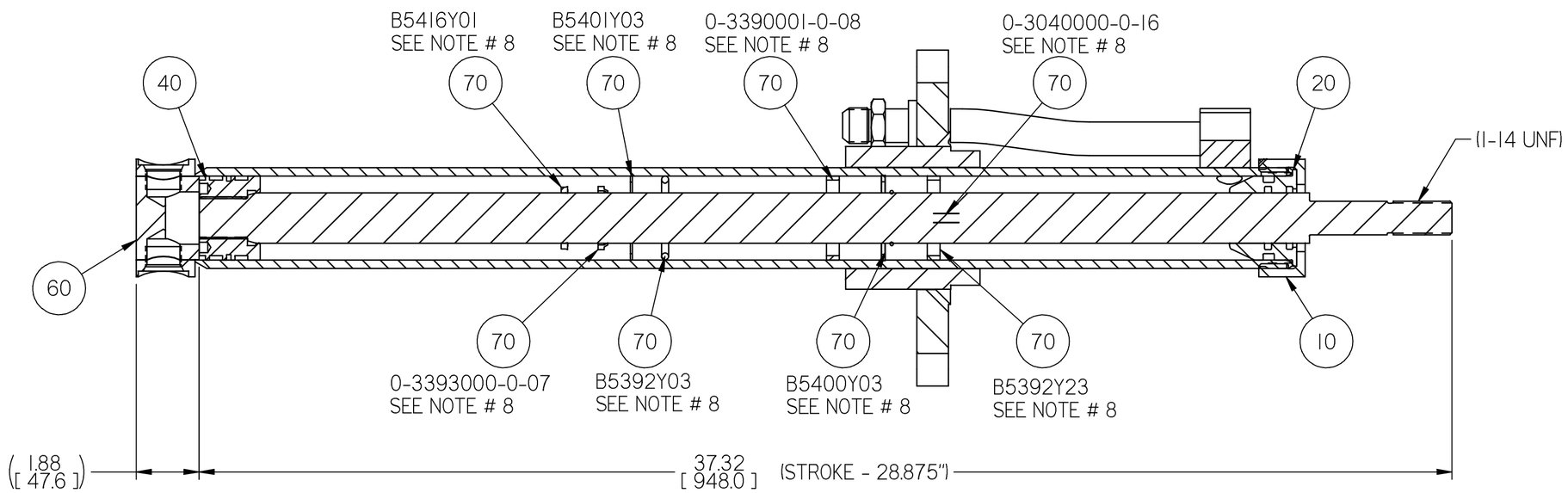

SECTION A-A

PRESSURE RATING:

OPERATING ----
2,550 PSI (175 BAR)
BURST (MIN) ----
10,220 PSI (700 BAR)

NOTES:

1. STAMP CYLINDER ASSY NUMBER ON END CAP.
2. INSTALL LOCKWIRE L424026 17 GA.(Ø.054)
3. CYLINDER ASSY SHALL NOT LEAK AT ANY WELD JOINT WHILE MAINTAINING 3000 PSI AT BOTH PORTS FOR 5 MIN.
4. LUBRICATE SEALS FROM SEAL KIT BEFORE INSTALLATION.
5. TIGHTEN ITEM NO 40 -PISTON TO 150-100 lb-ft TORQUE,
6. TAP DRILL 1.25 DEEP & 5/16-13 UNC-3B X 1" DEEP AT ASSY.
7. APPLY THREAD RETAINING COMPOUND,LOCTITE NO .242, P.N. 0-3040000-0-06 (REF).
8. THESE COMPONENTS ARE INCLUDED IN # ITEM NO 70 (SEAL KIT).

Inch
[mm]

CONFIDENTIAL
© COPYRIGHT 2011 HARSCO. THIS DRAWING OR DOCUMENT IS THE PROPERTY OF HARSCO AND EMBODIES CONFIDENTIAL INFORMATION, TRADE SECRET INFORMATION, AND/OR KNOW-HOW THAT IS THE PROPERTY OF HARSCO. BY ACCEPTING THIS DRAWING OR DOCUMENT, THE RECIPIENT AGREES (1) NOT TO PROVIDE, OR OTHERWISE MAKE AVAILABLE, THE DRAWING OR DOCUMENT, OR ANY INFORMATION OR KNOW-HOW EMBODIED THEREIN, TO ANY THIRD PARTY AND (2) NOT TO REPRODUCE OR USE THE DRAWING OR DOCUMENT TO MANUFACTURE ANY APPARATUS OR DEVICE, WITHOUT THE PRIOR WRITTEN AUTHORIZATION OF HARSCO.

NOMINAL SIZE RANGE		INCH PLUS OR MINUS	
OVER	TO	2 PLACE DECIMAL	3 PLACE DECIMAL
0	6	.03	.005
6	24	.04	.008
24	-	.06	.010

NOMINAL SIZE RANGE		METRIC PLUS OR MINUS	
OVER	TO	1 PLACE DECIMAL	2 PLACE DECIMAL
0	150	.8	.13
150	600	1.0	.20
600	-	1.5	.25

UNLESS OTHERWISE SPECIFIED ALL MACHINED SURFACES WILL HAVE;
A SURFACE FINISH OF 125 MICROINCHES
ANGULAR TOLERANCE OF ± .50"
CONCENTRICITY WITHIN .010

THIRD ANGLE PROJECTION

UNLESS OTHERWISE SPECIFIED, ALL WELDS SHOULD ADHERE TO THE MOST CURRENT A.W.S WELDING STANDARDS

CHANGE	R/L	REVISION	DR	DATE
ECN-106032	F	SE DRAFT CREATED AND ADDED	SHL	06-10-10
EC501909	G	ADDED NOTES FOR SEAL KIT ITEM	SRK	09-02-11
		COMPONENTS AND STROKE LENGTH		

Description: CYLINDER, HYDRAULIC - 2 1/2"

HARSCO RAIL

Material: -; -
Machine Type: MARK IV
Size: C
Weight: 64.3 lbm
Drawn: shol
Date Drawn: 06/10/10
Part Number: B5761XAA
Sheet: 1 of 1

SOLID EDGE DRAWING
DO NOT SCALE

Item Number	Document Number	Title	Quantity
1	0-2300077-0-01	CYL & BEARING ASSY	1
2	0-2300076-0-01	PISTON ROD & BEARING ASSY	1
3	Y681210	CAP BUSHING	1
4	A0043057	5/16-24 X 3/4 HHCS NYLOK	6
5	Z681208	RETAIN WASHER	1
6	D4676X01	UNITIZED PISTON W/ SEAL	1
7	Z681209	RETAIN WASHER	1
8	L420520	3/4-16 FLEX NUT	1
9	Z687107	SEAL KIT	1

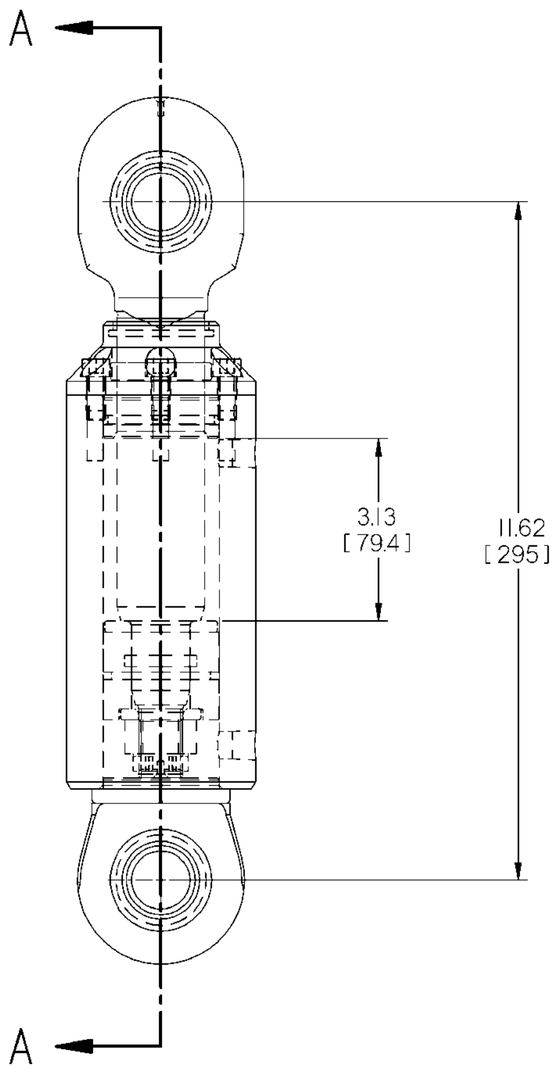

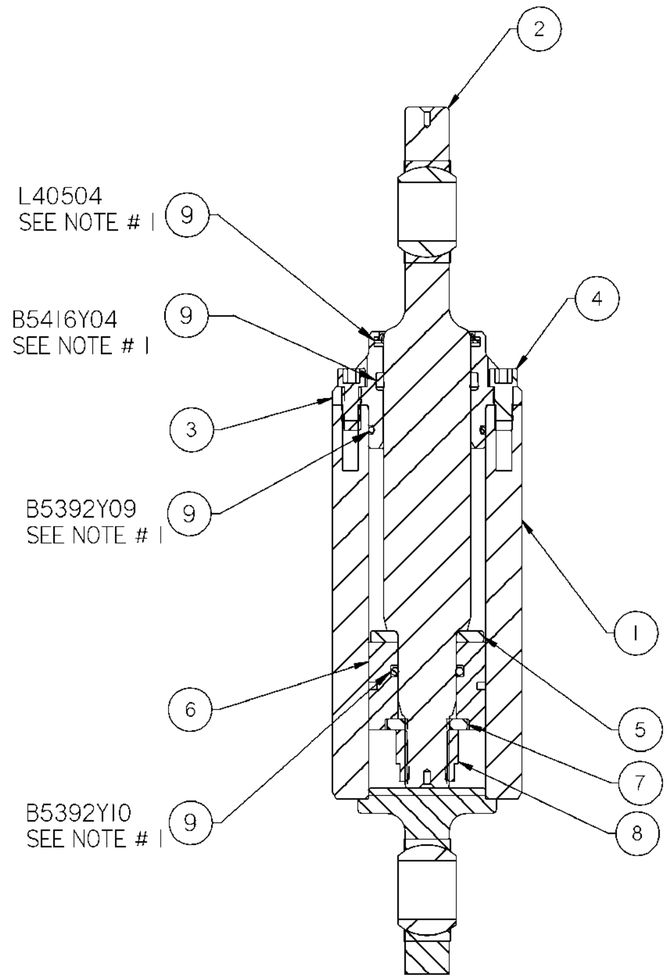

SECTION A-A

NOTE :

1. THESE COMPONENTS ARE INCLUDED IN ITEM # 9 SEAL KIT

Inch
[mm]

SOLID EDGE DRAWING

CONFIDENTIAL

© COPYRIGHT 2009 HARSCO. THIS DRAWING OR DOCUMENT IS THE PROPERTY OF HARSCO AND EMBODIES CONFIDENTIAL INFORMATION, TRADE SECRET INFORMATION, AND/OR KNOW-HOW THAT IS THE PROPERTY OF HARSCO. BY ACCEPTING THIS DRAWING OR DOCUMENT, THE RECIPIENT AGREES (1) NOT TO PROVIDE, OR OTHERWISE MAKE AVAILABLE, THE DRAWING OR DOCUMENT, OR ANY INFORMATION OR KNOW-HOW EMBODIED THEREIN, TO ANY THIRD PARTY AND (2) NOT TO REPRODUCE OR USE THE DRAWING OR DOCUMENT TO MANUFACTURE ANY APPARATUS OR DEVICE, WITHOUT THE PRIOR WRITTEN AUTHORIZATION OF HARSCO.

IMPLIED TOLERANCES

ALL DIMENSIONS ARE IN INCHES - TOLERANCE UNLESS OTHERWISE SPECIFIED

INCH PLUS OR MINUS				METRIC PLUS OR MINUS			
OVER	TO	2 PLACE DECIMAL	3 PLACE DECIMAL	OVER	TO	1 PLACE DECIMAL	2 PLACE DECIMAL
0	6	.03	.005	0	150	.8	.13
6	24	.04	.008	150	600	1.0	.20
24	-	.06	.010	600	-	1.5	.25

UNLESS OTHERWISE SPECIFIED ALL MACHINED SURFACES WILL HAVE:
A SURFACE FINISH OF 125 MICROINCHES
ANGULAR TOLERANCE OF ± .50°
CONCENTRICITY WITHIN .010

THIRD ANGLE PROJECTION

UNLESS OTHERWISE SPECIFIED, ALL WELDS SHOULD ADHERE TO THE MOST CURRENT A.W.S WELDING STANDARDS

CHANGE	R/L	REVISION	DATE
ECN-105967	U	SE DRAFT VERSION CREATED	06-03-10
		ITEM NUMBER' SEQUENCE HAVE BEEN ALTERED	

Description: SQUEEZE CYLINDER

Drawing Number: ----------

Machine Type: MARK IV

Model: X68297.asm

Drawn: rkamal

Date Drawn: 03 June 10

Weight: ------

Scale: 1:2

APVD Desg: BPA

APVD ChEng: HW

Mat'l: ------

HARSCO RAIL

Part Number: X68297

Size: C

Sheet: 1 of 1

Plotted by rkamal on 8/4/2010 X68297.dft

ENG.DWG.NO.
X768362A

(18) SEAL KIT-INCLUDES ALL ITEMS MARKED (*)

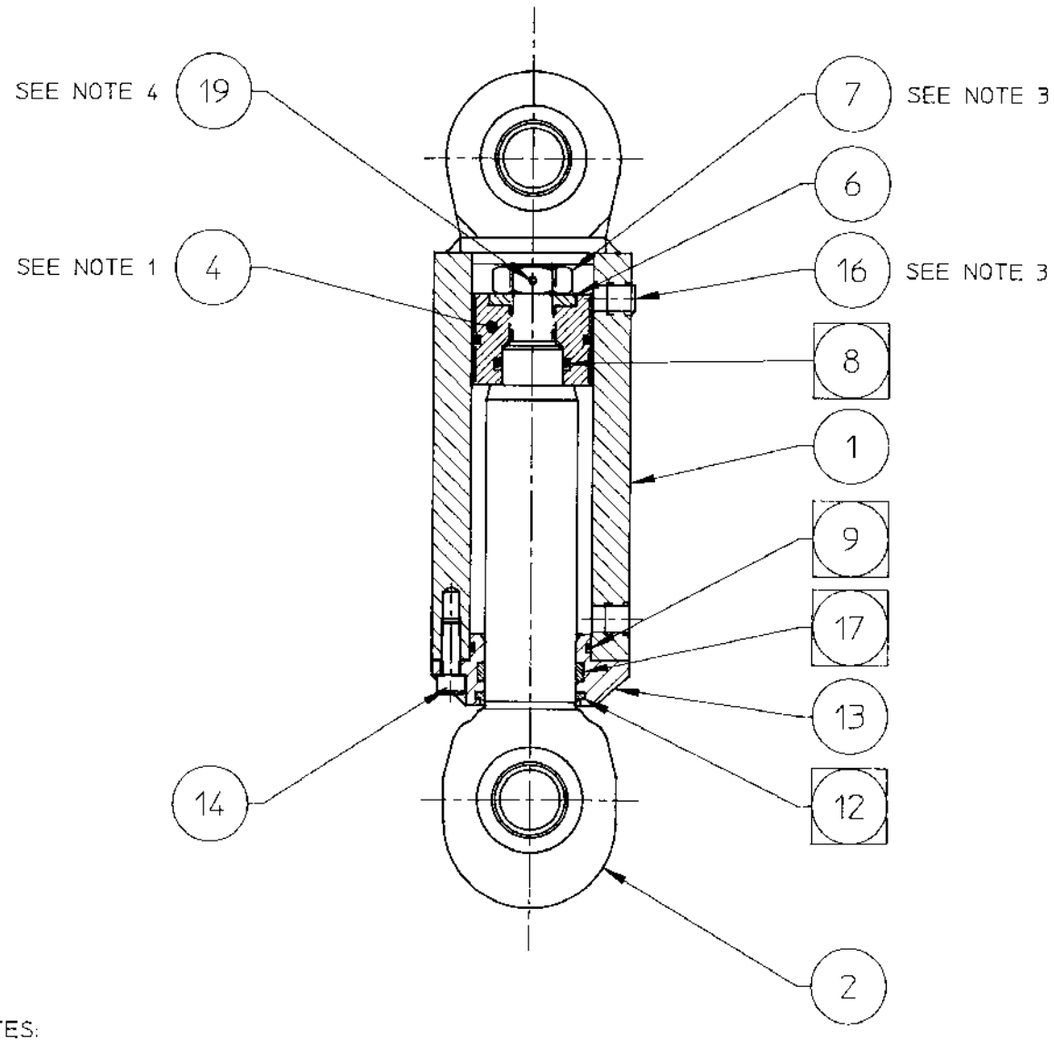

RETRACTED LENGTH = 10 5/8
EXTENDED LENGTH = 14 3/4
STROKE = 4 1/8
BORE DIA = 2
ROD DIA = 1 1/2
PIN DIA = 1
PORT SIZE = 1/4 NPT

SEE SEPARATE PARTS LIST

NOTES:

1. ITEM 4 (PISTON) IS TO BE TIGHTENED WITH A STRAP WRENCH TO INSURE THAT IT IS FIRMLY AGAINST THE SHOLDER OF THE ROD.
2. ITEM 7 (NUT) TO BE TORQUED TO 75 FT LBS.
3. ITEM 16 (PIPE PLUG) TO BE FINGER TIGHT IN EITHER PORT. IT WILL BE PERMANENTLY LOCATED IN CORRECT PORT WHEN CYLINDER IS INSTALLED ON MACHINE.
4. AFTER ITEM 7 (NUT) INSTALLATION, DRILL Ø1/8 HOLE THRU NUT AND ROD. HOLE MUST BE CENTERED ALONG ROD CENTERLINE AND PLACED PERPENDICULAR TO NUT FLAT NO MORE THAN 1/16 FROM PISTON. PRESS ITEM 19 ROLL PIN INTO HOLE FLUSH WITH NUT FLATS.

REVISIONS

NO	ER	DESCRIPTION	ZONE	DR	CK	APP	MF
1	76341	NEW RELEASE	AUG.4,76	JCW	CTS		
2	77017 77174	ITEM 2 WAS Y768221A REMOVED ITEM 15 & NOTE 1	JAN.17,77 JUN.23,77	CTS MLT			
3 3&4	77174 78256	ITEM 1 WAS Y768224A ITEM 2 WAS Y768225A REMOVED ITEM 15 REMOVED ITEM 10 & 11 REPLACED BY ITEM 17	JUN.22,77 SEP.7,78	MLT CJW			
5	79074	ITEM 4 & 13 REMOVED DASH BETWEEN # & SUFFIX					
6	4765	ITEM 4 WAS Z688061C2 ITEM 6 WAS Z688067-01 ITEM 18 ADDED SEAL KIT COLUMN ADDED ITEMS 5,8,9,12&17 DELETED FROM TAB A		WEL	AML		
7	6904.1	ADDED ITEM 19 ROLL PIN NOTE 2 150 FT LBS WAS 220 ADDED NOTE 4		JRF	DGV		
8	7898 .3	REDRAWN FOR DATA BASE NOTE 1 ADDED NOTE 2 WAS 150 FT LBS	APR.9,96	LES	[illegible]	[illegible]	

FIG NO.	ITEM NO.	PART NUMBER	DESCRIPTION AND MATERIAL SIZE (REF.ONLY)	QTY

IMPLIED TOLERANCES
ALL DIMENSIONS ARE IN INCHES-TOLERANCE UNLESS OTHERWISE SPECIFIED

NOMINAL SIZE RANGE		PLUS OR MINUS			NOMINAL SIZE RANGE		PLUS OR MINUS		
OVER	TO	FRACTION	2 PLACE DECIMAL	3 PLACE DECIMAL	OVER	TO	FRACTION	2 PLACE DECIMAL	3 PLACE DECIMAL
-	1	1/64	.01	.003	6	24	3/64	.03	.008
1	6	1/32	.02	.005	24	-	1/16	.05	.010

ANGULAR DIMENSIONS PLUS OR MINUS 1 DEGREE

√ ALL MACHINED SURFACES TO HAVE A SURFACE FINISH OF 125 MICROINCHES UNLESS OTHERWISE SPECIFIED.

WELDING SPECIFICATION

UNLESS OTHERWISE SPECIFIED ALL WELDS SHOULD ADHERE TO FAIRMONT TAMPER WELDING SPECIFICATION NO. 101

WEIGHT lbs.

3rd ANGLE PROJECTION

DO NOT SCALE

SHEET 1 CONT. ON –

DESCRIPTION (24
SQUEEZE CYLINDER ASSY

DRAWN JCW	DATE 8/4/76	MACHINE TYPE E,ES,EA,EAS	
CHECKED CTS	DATE		
APP-ENG WAC	DATE 4 23 96	Fairmont Tamper™ 2401 Edmund Road-Box 20 Cayce-West Columbia, South Carolina 29171-0020 (803) 822-9160	
APP-MFG	DATE		
LAST ECR. 7898 .3	CHECKED	ENG.DWG.NO. X768362A	
	DATE		

THIS DOCUMENT CONTAINS PROPRIETARY INFORMATION AND SUCH INFORMATION MAY NOT BE DISCLOSED TO OTHERS FOR ANY PURPOSE OR USED FOR MANUFACTURING PURPOSES WITHOUT THE WRITTEN PERMISSION OF FAIRMONT TAMPER.

PARTS LIST

ASSEMBLY IDENTIFIER: A

ITEM NO	PART NUMBER	DESCRIPTION	QUANTITY	
1	0-2300079-0-01	BODY WITH BEARING	1	0
2	0-2300080-0-01	ROD & BEARING ASSY	1	0
~~3~~	~~Z681208~~	~~RETAINING WASHER~~	~~1~~	~~0~~
4	D4676X02	UNITIZED PISTON W/SEAL	1	0
~~5~~	~~L40514~~	~~PISTON RING~~	~~0~~	~~3~~
6	A0598Y01	RETAINING WASHER	1	0
7	A0056013	3/4-16 HEX JAM NUT	1	0
8	B5392Y10	O-RING	0	1
9	B5392Y09	O-RING	0	1
~~10~~	~~L40238~~	~~BACK-UP WASHER~~	~~2~~	~~0~~
~~11~~	~~L40123~~	~~O-RING~~	~~1~~	~~0~~
12	L40504	ROD WIPER	0	1
13	Y688062C2	ROD BUSHING	1	0
14	A0043058	5/16-24 X7/8 NYLSHCS GR8	6	0
~~15~~	~~L420159~~	~~BEARING~~	~~2~~	~~0~~
16	L422997	1/4 NPT PIPE PLUG	1	0
17	B5416Y04	ROD SEAL	0	1
18	Z687107	SEAL KIT	1	0
19	L40026	1/8 X 1 ROLL PIN	1	0

DWG NO: X768362A

SHEET: 1

CONT ON: –

DESCRIPTION (24): SQUEEZE CYLINDER ASSY

DRAWN: JCW

DATE: 8/4/76

CHECKED: CTS

DATE:

APP: WAR

DATE: 4-23-96

APP:

DATE:

REVISIONS

NO	ER	DESCRIPTION		DR	CK	APP	MF
1	76341	NEW RELEASE	AUG.4,76	JCW			
2	77017	ITEM 2 WAS Y768221A	JAN.17,77	CTS			
3	77174	ITEM 1 WAS Y768224A ITEM 2 WAS Y768225-001 ITEM 15 REMOVED	JUN.22,77	MLT			
4	78256	ITEM 10 & 11 REMOVED, ITEM 17 ADDED	SEP.7,78	CJW			
5	79074	ITEM 4 & 13 REMOVED DASH BETWEEN # & SUFFIX					
6	47656	ITEM 4 WAS Z688061C2, ITEM 6 WAS Z688067-01 ITEM 18 ADDED, SEAL KIT COLUMN ADDED ITEMS 5,8,9,12 & 17 DELETED FROM TAB Z		WEL	AML		
7	6904.1	ITEM 19 ADDED		JRF	AML		
8	78158 #3	REDRAWN FOR DATA BASE ITEM 3 DELETED, ITEM 4 WAS A0597Y01 ITEM 7 WAS L420520 ITEM 14 ADDED P/N	APR.9,96	LES		WAR	

SHEET: 1

CONT ON: –

LAST ECR: 78898 .3

CHECKED:

DATE:

DWG NO: X768362A

FOR WOOD & CONCRETE TES

SEAL KIT Z687107 (REF)

ASSEMBLY DESCRIPTION

ER	47656
DR	WEL
CK	
APP	AML
MF	

Fairmont Tamper™
2401 Edmund Road-Box 20
Cayce-West Columbia,
South Carolina 29171-0020

ITEM	PART NO	QTY	DESCRIPTION
1	0-3304057-0-08	1	37/FLARE TUBE 90 DEG SW
2	0-3304132-0-01	1	REDUCER JIC SWIVEL-JIC
3	H2353W05	1	MKIV HOSE KIT (AUTO OIL)
4	L420002	1	90DEG JIC-MP USE F011937
5	B1657Y08	1	NEEDLE VALVE MANIFOLD
6	L423607	250	NYLON TUBING (FT)
7	A5443Y10	4	TUBE FITTING
8	5020568	1	ANGLE, MANIFOLD MOUNT
9	A5443Y03	2	FITTING,COMPRESS'N TUBE
10	A7774Y01	2	OIL DEFLECTOR
11	A5443Y04	2	FITTING, COMPRESS'N TUBE
12	L420492	50	STANDARD TIE
13	L420493	6	HEAVY DUTY TIE
14	G6279Y01	1	OILER DECAL

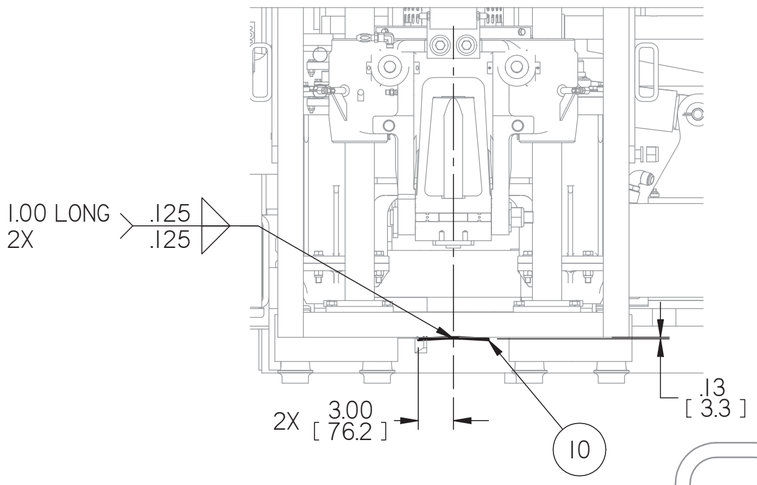

SECTION B-B

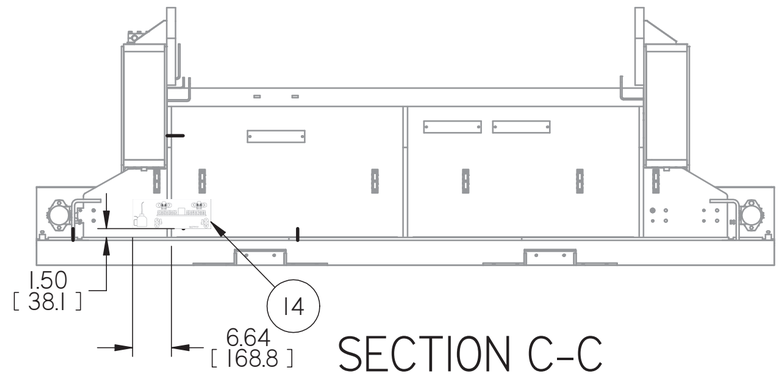

SECTION C-C

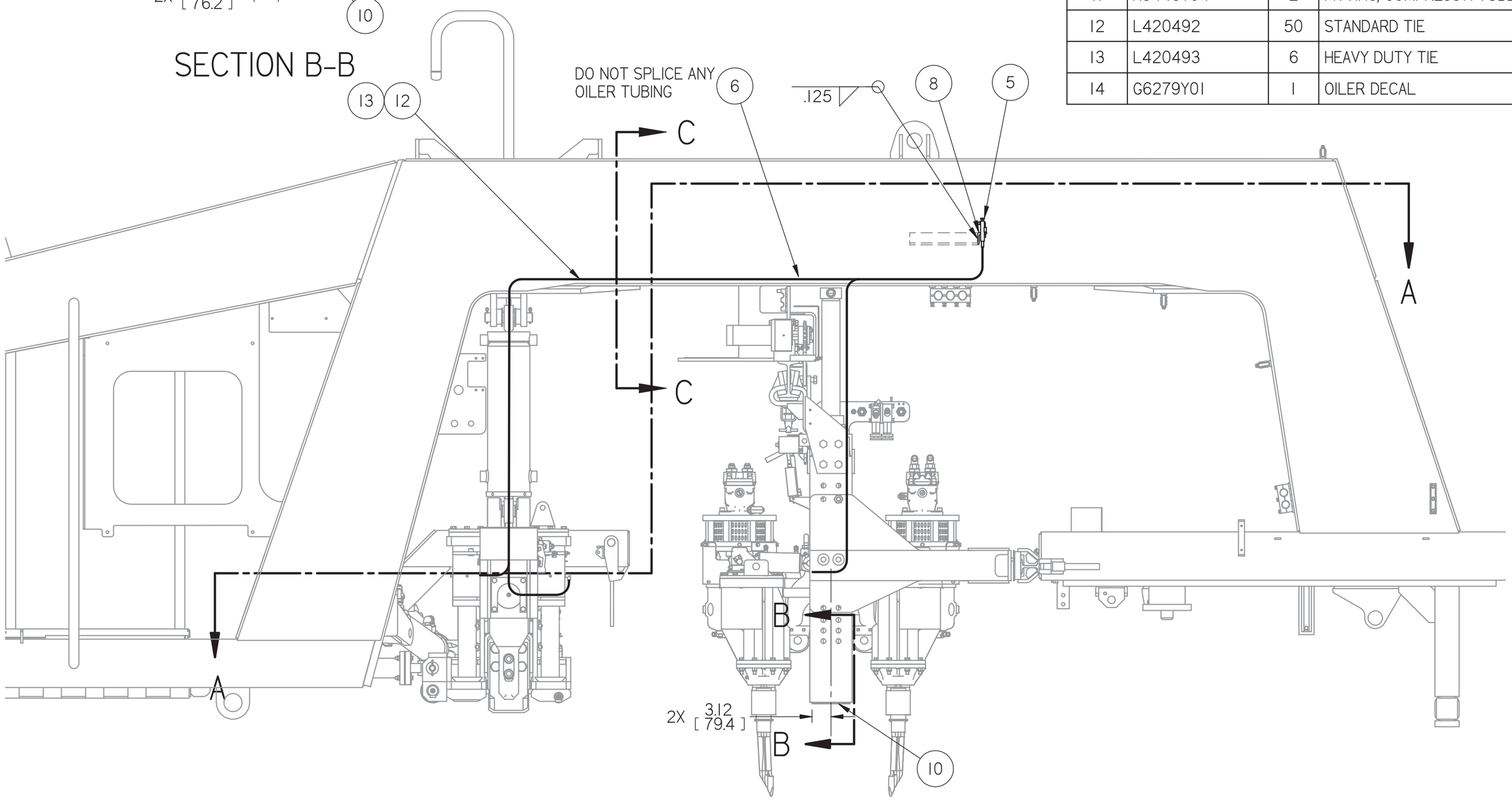

Inch
[mm]

CONFIDENTIAL
© 2012 HARSCO CORPORATION, ALL RIGHTS RESERVED. THIS DRAWING OR DOCUMENT IS THE PROPERTY OF HARSCO AND EMBODIES CONFIDENTIAL INFORMATION, TRADE SECRET INFORMATION, AND/OR KNOW-HOW THAT IS THE PROPERTY OF HARSCO. BY ACCEPTING THIS DRAWING OR DOCUMENT, THE RECIPIENT AGREES (1) NOT TO PROVIDE, OR OTHERWISE MAKE AVAILABLE, THE DRAWING OR DOCUMENT, OR ANY INFORMATION OR KNOW-HOW EMBODIED THEREIN, TO ANY THIRD PARTY AND (2) NOT TO REPRODUCE OR USE THE DRAWING OR DOCUMENT TO MANUFACTURE ANY APPARATUS OR DEVICE, WITHOUT THE PRIOR WRITTEN AUTHORIZATION OF HARSCO.

NOMINAL SIZE RANGE		INCH PLUS OR MINUS		NOMINAL SIZE RANGE		METRIC PLUS OR MINUS	
OVER	TO	2 PLACE DECIMAL	3 PLACE DECIMAL	OVER	TO	1 PLACE DECIMAL	2 PLACE DECIMAL
0	6	.03	.005	0	150	.8	.13
6	24	.04	.008	150	600	1.0	.20
24	-	.06	.010	600	-	1.5	.25

UNLESS OTHERWISE SPECIFIED ALL MACHINED SURFACES WILL HAVE;
A SURFACE FINISH OF 125 MICROINCHES
ANGULAR TOLERANCE OF ± .50°
CONCENTRICITY WITHIN .010

THIRD ANGLE PROJECTION

UNLESS OTHERWISE SPECIFIED, ALL WELDS SHOULD ADHERE TO THE MOST CURRENT A.W.S WELDING STANDARDS

CHANGE	R/L	REVISION	DR	DATE
EC504147	A	RELEASE	HW	06-21-12

Description: KIT, AUTOMATIC OILER

HARSCO RAIL

Material: ,

Machine Type:

Weight: 0.0 lbm

Drawn: hwiggins

Date Drawn: 6/20/2012

Part Number: 5020484

Size: C

Sheet: 1 of 2

SOLID EDGE DRAWING

DO NOT SCALE

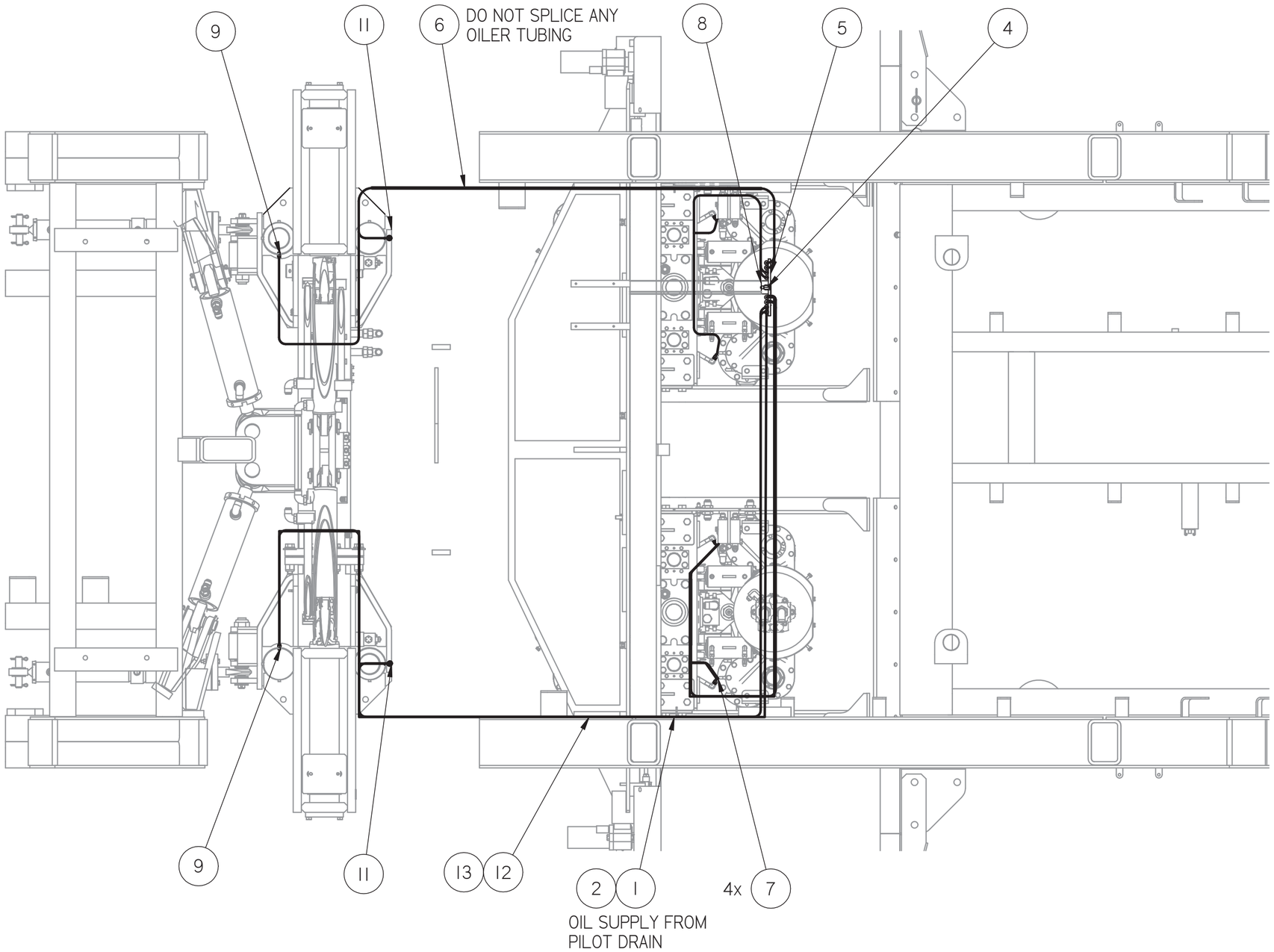

SECTION A-A

Inch
[mm]

CONFIDENTIAL
© 2012 HARSCO CORPORATION, ALL RIGHTS RESERVED. THIS DRAWING OR DOCUMENT IS THE PROPERTY OF HARSCO AND EMBODIES CONFIDENTIAL INFORMATION, TRADE SECRET INFORMATION, AND/OR KNOW-HOW THAT IS THE PROPERTY OF HARSCO. BY ACCEPTING THIS DRAWING OR DOCUMENT, THE RECIPIENT AGREES (1) NOT TO PROVIDE, OR OTHERWISE MAKE AVAILABLE, THE DRAWING OR DOCUMENT, OR ANY INFORMATION OR KNOW-HOW EMBODIED THEREIN, TO ANY THIRD PARTY AND (2) NOT TO REPRODUCE OR USE THE DRAWING OR DOCUMENT TO MANUFACTURE ANY APPARATUS OR DEVICE, WITHOUT THE PRIOR WRITTEN AUTHORIZATION OF HARSCO.

NOMINAL SIZE RANGE		INCH PLUS OR MINUS		NOMINAL SIZE RANGE		METRIC PLUS OR MINUS	
OVER	TO	2 PLACE DECIMAL	3 PLACE DECIMAL	OVER	TO	1 PLACE DECIMAL	2 PLACE DECIMAL
0	6	.03	.005	0	150	.8	.13
6	24	.04	.008	150	600	1.0	.20
24	-	.06	.010	600	-	1.5	.25

UNLESS OTHERWISE SPECIFIED ALL MACHINED SURFACES WILL HAVE;
A SURFACE FINISH OF 125 MICROINCHES
ANGULAR TOLERANCE OF ± .50°
CONCENTRICITY WITHIN .010

THIRD ANGLE PROJECTION

UNLESS OTHERWISE SPECIFIED, ALL WELDS SHOULD ADHERE TO THE MOST CURRENT A.W.S WELDING STANDARDS

CHANGE	R/L	REVISION	DR	DATE
EC504147	A	RELEASE	HW	06-21-12

Description: KIT, AUTOMATIC OILER

HARSCO RAIL

Material: ,

Machine Type:

Weight: 0.0 lbm

Drawn: hwiggins

Date Drawn: 6/20/2012

Part Number: 5020484

Size: C

Sheet: 2 of 2

SOLID EDGE DRAWING

DO NOT SCALE

P753281H TAMPING TOOL KIT
REPAIR PARTS

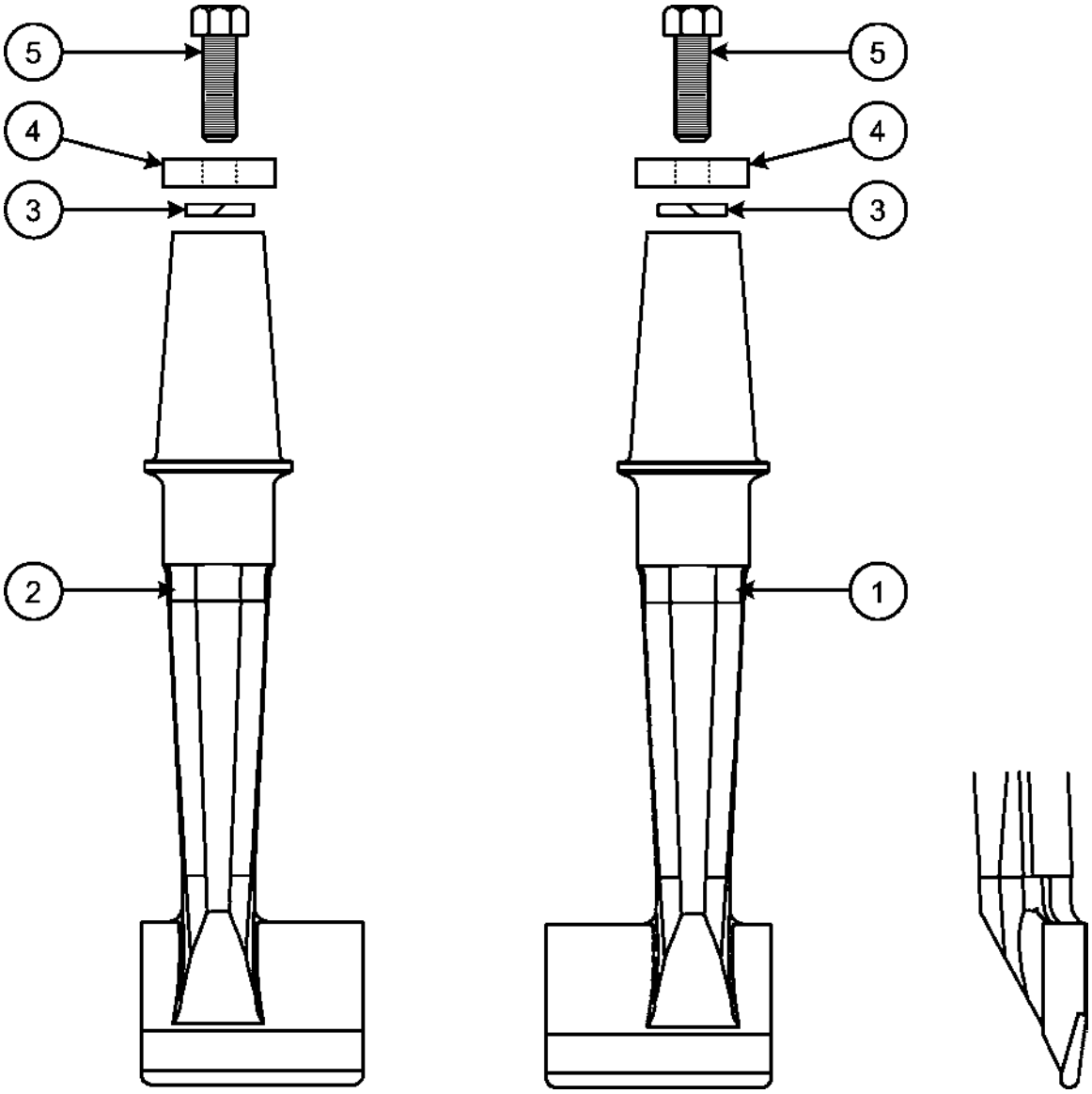

ITEM	PART NO	DESCRIPTION	QTY
	P753281H	Tamping Tool Kit	1
1	D2752Y01	BTI Tamping Tool - Left	8
2	D2752Y02	BTI Tamping Tool - Right	8
3	A8236Y01	Vibrator Washer	16
4	A0061017	Lock Washer – 5/8" Heavy	16
5	A0038022	Cap Screw – 5/8"-18 x 1-3/4" Grade 8	16

P753281Y TAMPING TOOL KIT
REPAIR PARTS

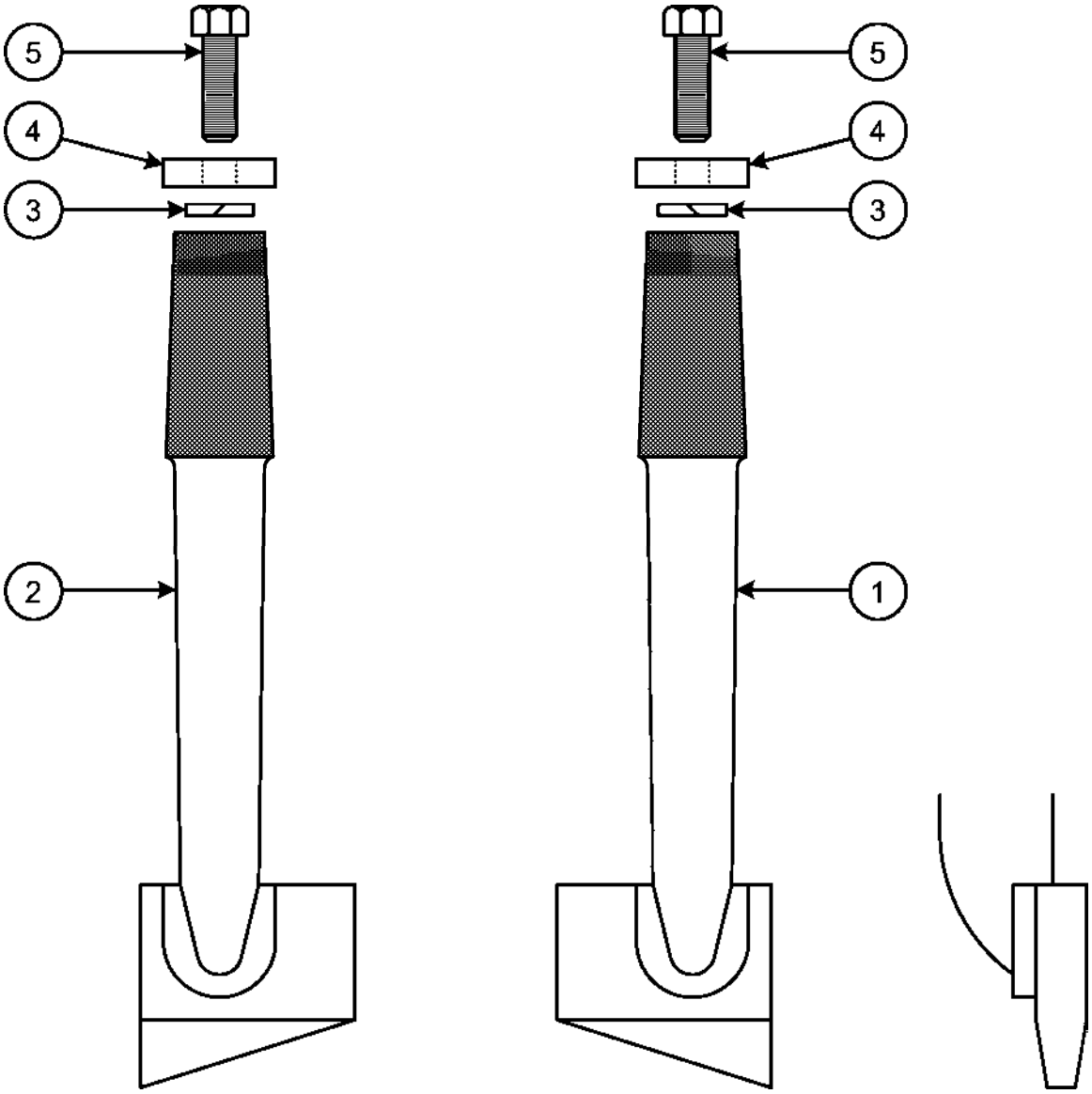

ITEM	PART NO	DESCRIPTION	QTY
	P753281Y	Tamping Tool Kit	1
1	A9602XAH	Tough Tamping Tool - Left	8
2	A9602XAG	Tough Tamping Tool - Right	8
3	A8236Y01	Vibrator Washer	16
4	A0061017	Lock Washer – 5/8" Heavy	16
5	A0038022	Cap Screw – 5/8"-18 x 1-3/4" Grade 8	16

ITEM	PART NO	QTY	DESCRIPTION
10	2019229	1	MOUNT, (LH) ANTENNA ASSEMBLY
20	2019232	1	MOUNT, (RH) ANTENNA ASSEMBLY
30	F023226	12	DC-HEX FLG CR 1/2-13 X 1 GR5 Z
40	4016549	2	PLATE, AUTOMAG BOX MOUNTING
50	4016513	8	MOUNT, VIBRATION ISOLATORS
60	4016560	2	BOX ASSEMBLY, AUTOMAG TIE SENSOR
70	F022138	8	DC-HX FLG NUT 1/4-20 GR5 ZP US
80	A0041043	8	1/4-20 X 1 SOCHD C SCR
90	4012592	4	ANTENNA ASSEMBLY
100	F001106	16	DC-WROUGHT WASHER 1/4 Z.P. *
110	F010211	8	HEX HD CAP SCR 1/4-20X2 1/4 GR
120	F013588	8	DC-1/4-20 ELAS STP NUT
130	4018523	1	CABLE, DUAL PROBE AUTOMAG SYNC
140	3401327	2	CABLE ASSEMBLY, M12, M/F, 5 ME
150	3401326	2	CABLE ASSEMBLY, M12, M/F, 3 ME
160	4016876	1	FILM INSERT, 4 GEAR/TIE FINDER
170	4025056	1	FILM INSERT, AUTO TAMP

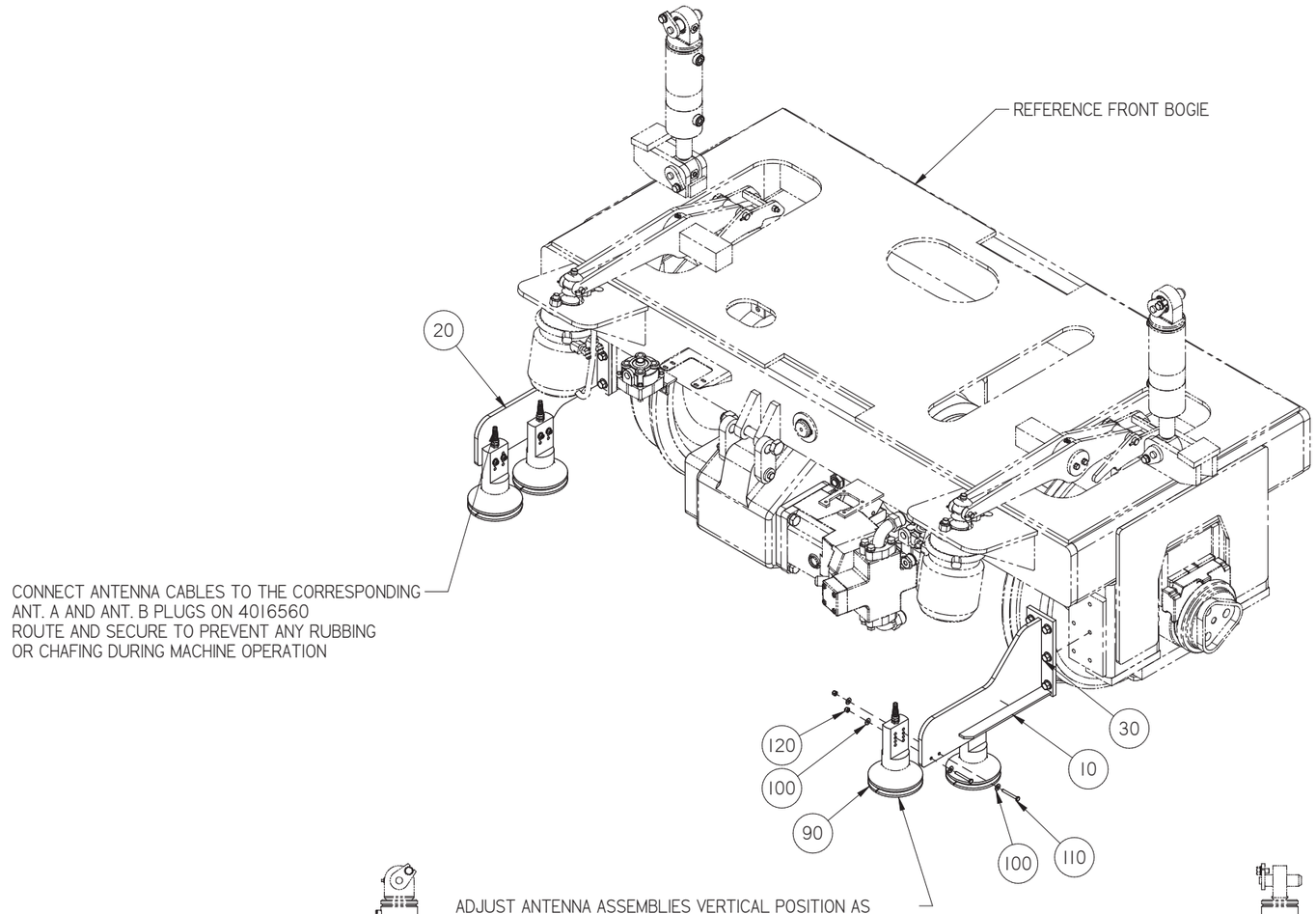

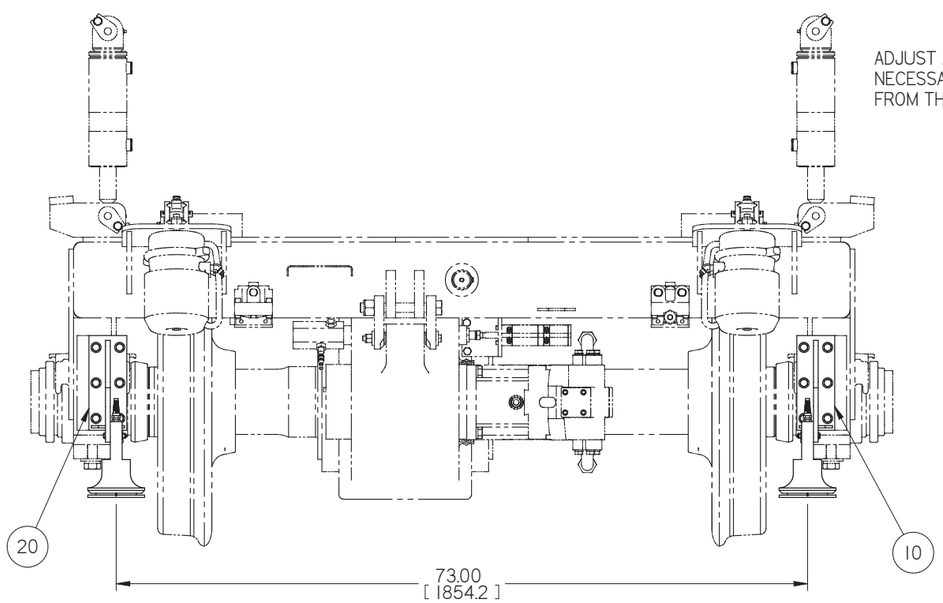

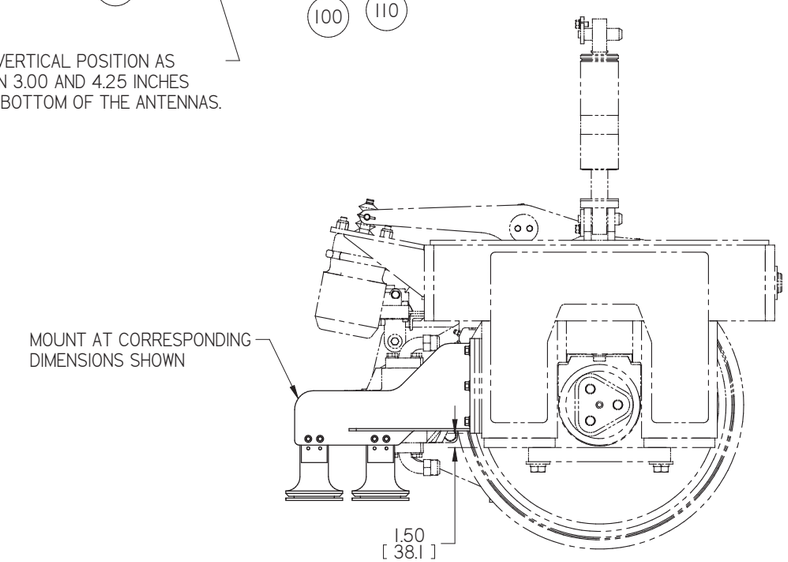

Inch
[mm]

CONFIDENTIAL
© COPYRIGHT 2011 HARSCO. THIS DRAWING OR DOCUMENT IS THE PROPERTY OF HARSCO AND EMBODIES CONFIDENTIAL INFORMATION, TRADE SECRET INFORMATION, AND/OR KNOW-HOW THAT IS THE PROPERTY OF HARSCO. BY ACCEPTING THIS DRAWING OR DOCUMENT, THE RECIPIENT AGREES (1) NOT TO PROVIDE, OR OTHERWISE MAKE AVAILABLE, THE DRAWING OR DOCUMENT, OR ANY INFORMATION OR KNOW-HOW EMBODIED THEREIN, TO ANY THIRD PARTY AND (2) NOT TO REPRODUCE OR USE THE DRAWING OR DOCUMENT TO MANUFACTURE ANY APPARATUS OR DEVICE, WITHOUT THE PRIOR WRITTEN AUTHORIZATION OF HARSCO.

NOMINAL SIZE RANGE		INCH PLUS OR MINUS	
OVER	TO	2 PLACE DECIMAL	3 PLACE DECIMAL
0	6	.03	.005
6	24	.04	.008
24	-	.06	.010

NOMINAL SIZE RANGE		METRIC PLUS OR MINUS	
OVER	TO	1 PLACE DECIMAL	2 PLACE DECIMAL
0	150	.8	.13
150	600	1.0	.20
600	-	1.5	.25

UNLESS OTHERWISE SPECIFIED ALL MACHINED SURFACES WILL HAVE:
A SURFACE FINISH OF 125 MICROINCHES
ANGULAR TOLERANCE OF ± .50°
CONCENTRICITY WITHIN .010

THIRD ANGLE PROJECTION

UNLESS OTHERWISE SPECIFIED, ALL WELDS SHOULD ADHERE TO THE MOST CURRENT A.W.S WELDING STANDARDS

CHANGE	R/L	REVISION	DR	DATE
EC501042	A	DRAWING RELEASED	TDH	5-3-11

Description: TIE FINDER OPTION

HARSCO RAIL

Material: -; -

Machine Type: MARK IV CP

Size: D

Weight: 31962.1 lbm

Drawn: thatfield

Date Drawn: 5/5/2011

Part Number: 5008147

Sheet: 1 of 2

SOLID EDGE DRAWING

DO NOT SCALE

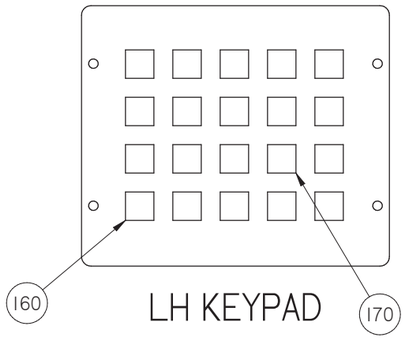

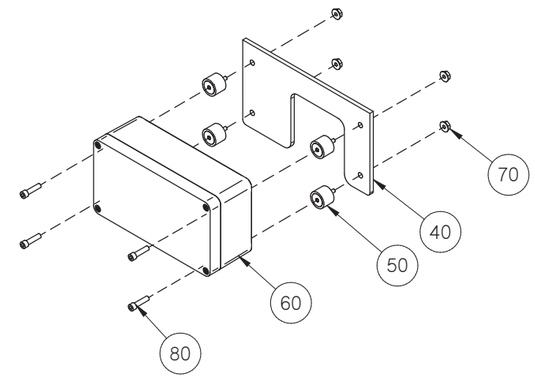

SEE ELECTRICAL SCHEMATIC
FOR JUPITER MODULE NUMBERS

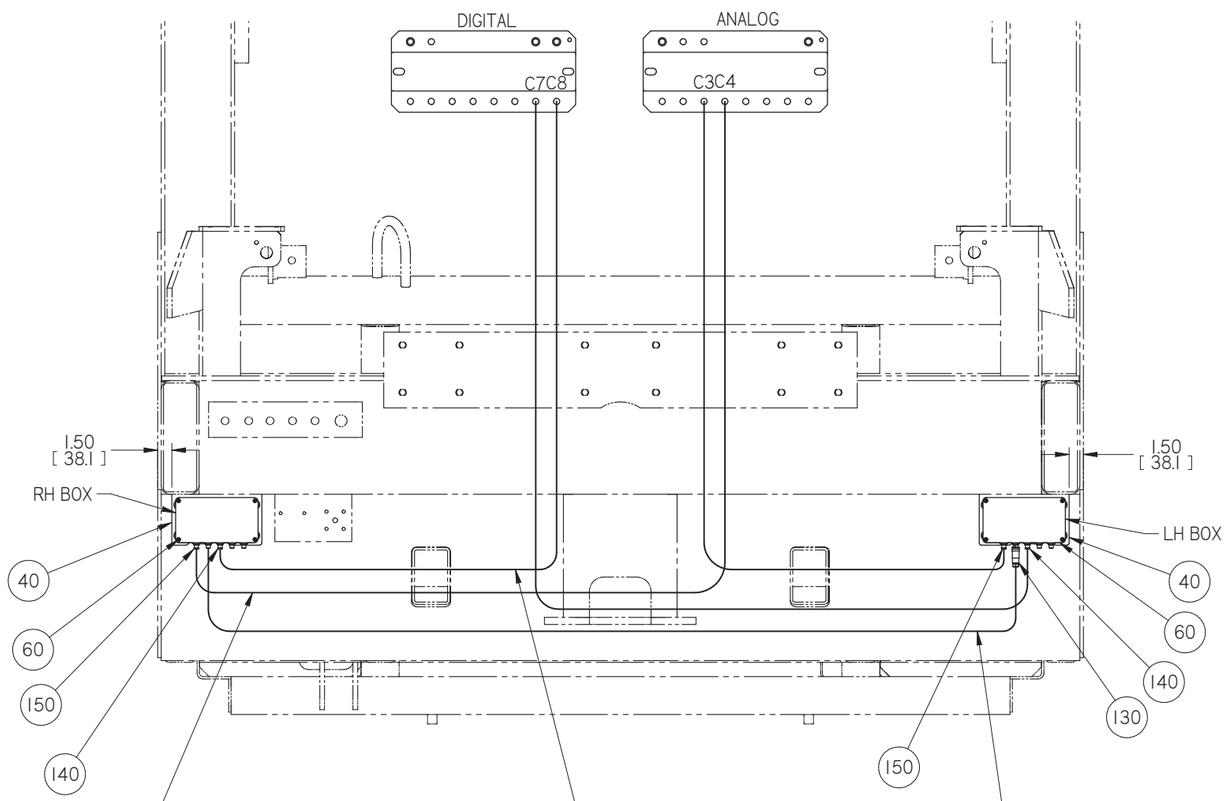

CONNECT TO "SIG OUT" PLUGS ON 4016560
ROUTE AND SECURE ON FRAME TO
PREVENT ANY RUBBING OR CHAFING
DURING MACHINE OPERATION 2 PLACES

CONNECT TO "PWR IN" PLUGS ON 4016560
ROUTE AND SECURE ON FRAME TO
PREVENT ANY RUBBING OR CHAFING
DURING MACHINE OPERATION 2 PLACES

CONNECT TO "SYNC" PLUGS ON 4016560
ROUTE AND SECURE ON FRAME TO
PREVENT ANY RUBBING OR CHAFING
DURING MACHINE OPERATION

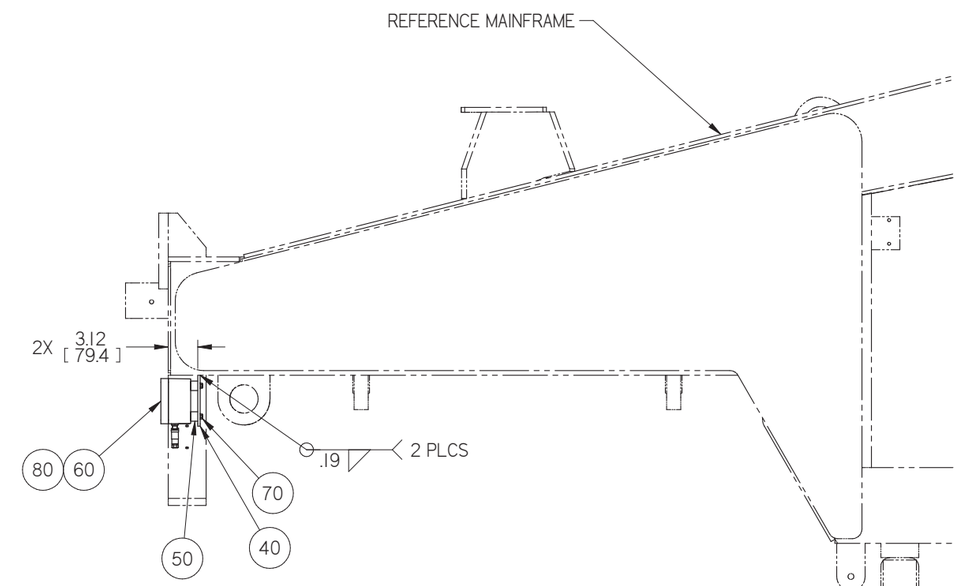

Inch
[mm]

CONFIDENTIAL
© COPYRIGHT 2011 HARSCO. THIS DRAWING OR DOCUMENT IS THE PROPERTY OF HARSCO AND EMBODIES CONFIDENTIAL INFORMATION, TRADE SECRET INFORMATION, AND/OR KNOW-HOW THAT IS THE PROPERTY OF HARSCO. BY ACCEPTING THIS DRAWING OR DOCUMENT, THE RECIPIENT AGREES (1) NOT TO PROVIDE, OR OTHERWISE MAKE AVAILABLE, THE DRAWING OR DOCUMENT, OR ANY INFORMATION OR KNOW-HOW EMBODIED THEREIN, TO ANY THIRD PARTY AND (2) NOT TO REPRODUCE OR USE THE DRAWING OR DOCUMENT TO MANUFACTURE ANY APPARATUS OR DEVICE, WITHOUT THE PRIOR WRITTEN AUTHORIZATION OF HARSCO.

INCH NOMINAL SIZE RANGE OVER	TO	PLUS OR MINUS 2 PLACE DECIMAL	3 PLACE DECIMAL
0	6	.03	.005
6	24	.04	.008
24	-	.06	.010

METRIC NOMINAL SIZE RANGE OVER	TO	PLUS OR MINUS 1 PLACE DECIMAL	2 PLACE DECIMAL
0	150	.8	.13
150	600	1.0	.20
600	-	1.5	.25

UNLESS OTHERWISE SPECIFIED ALL MACHINED SURFACES WILL HAVE;
A SURFACE FINISH OF 125 MICRONCHES
ANGULAR TOLERANCE OF +- 50'
CONCENTRICITY WITHIN .010

THIRD ANGLE PROJECTION

UNLESS OTHERWISE SPECIFIED, ALL WELDS SHOULD ADHERE TO THE MOST CURRENT A.W.S WELDING STANDARDS

CHANGE	R/L	REVISION	DR	DATE
EC501042	A	DRAWING RELEASED	TDH	5-3-11

Description: TIE FINDER OPTION

HARSCO RAIL

Material: -; -

Machine Type: MARK IV CP

Size: D

Weight: 31962.1 lbm

Drawn: thatfield

Date Drawn: 5/5/2011

Part Number: 5008147

Sheet: 2 of 2

SOLID EDGE DRAWING

DO NOT SCALE

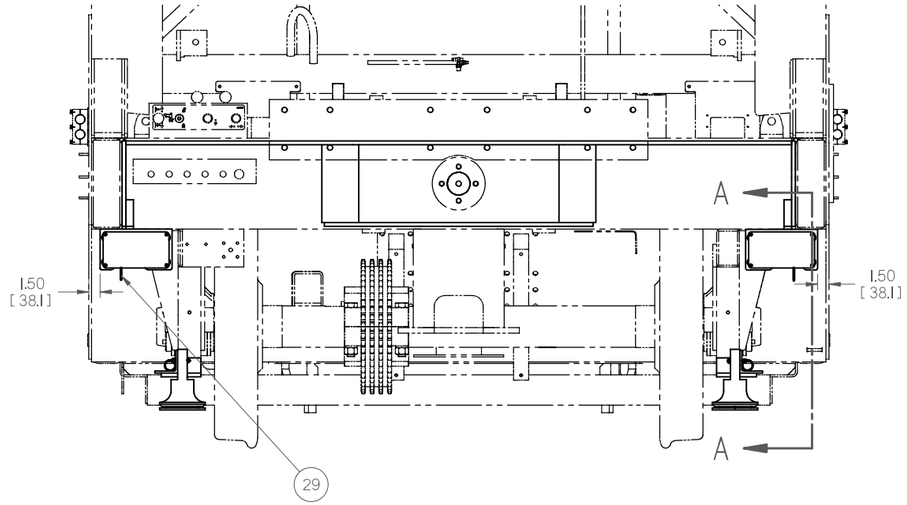

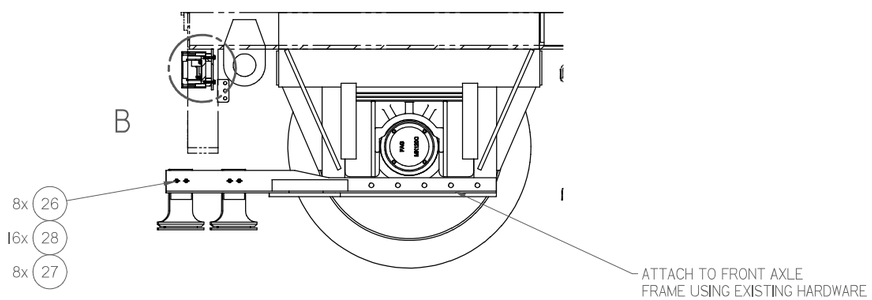

SECTION A-A

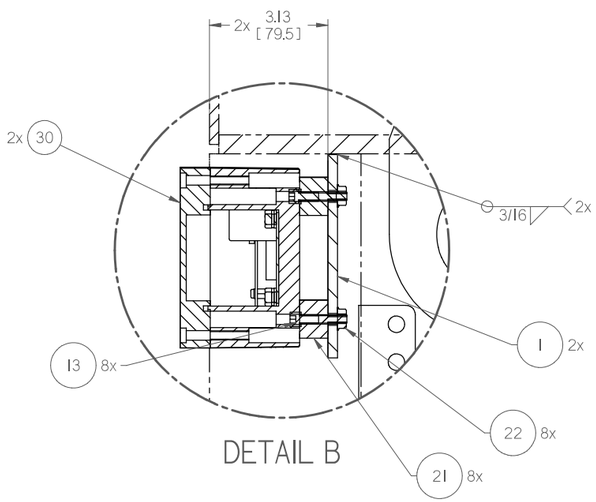

DETAIL B

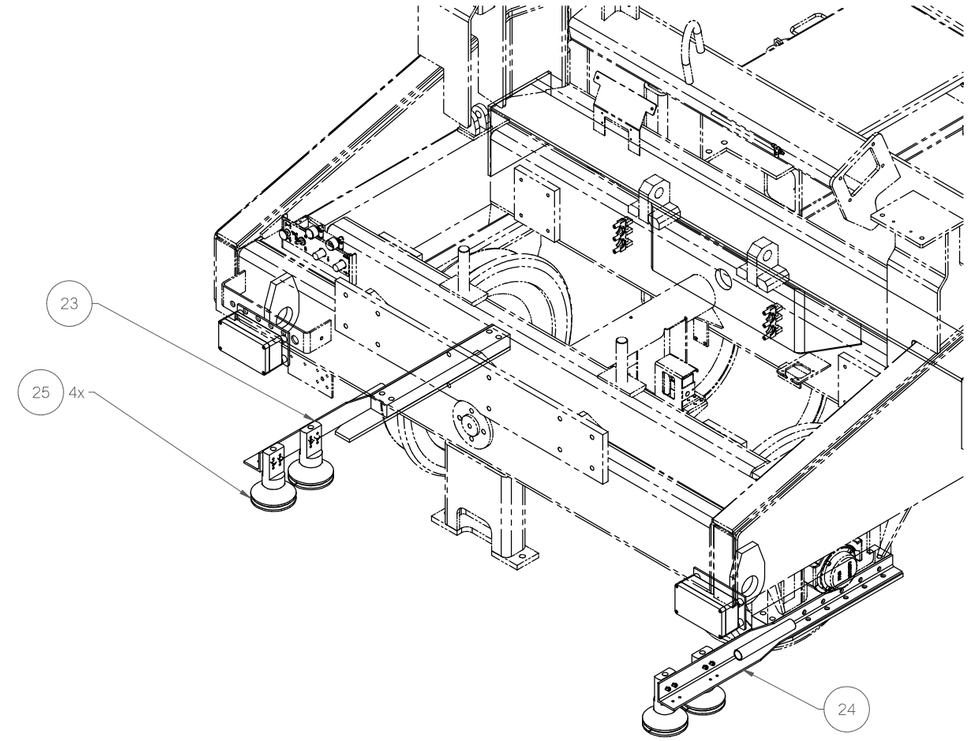

ITEM	PART #	DESCRIPTION	QTY
1	4016549	PLATE, AUTOMAG BOX MOUNTING	2
2	B0970Y07	MARKING STRIP	10
3	B0970Y02	END PLATE	1
4	D0650Y07	PLUG-IN RELAY, 24V	2
5	D0650Y04	PLUG-IN RELAY SOCKET	2
6	A0655Y06	PUSHBUTTON SWITCHES	1
7	H1828Y53	FILM INSERT TIE FINDER	1
8	A0653Y03	CONTACT BLOCK	1
9	A9297Y06	10 GA. WIRE	3
10	C9678Y09	10 AMP DIN RAIL CB	1
11	B0970Y05	END CLAMP	2
12	3401329	CABLE ASSEMBLY, M12, M/F, 10 M	4
13	A0041043	1/4-20 X 1 SOCHD C SCR	8
15	A1278Y10	STRAIN RELIEF	1
16	F018778	THREE CONDUCTOR CABLE	35
17	A9297Y03	16 GA. WIRE	50
18	3401330	CABLE ASSEMBLY, M12, M/P16, 3	1
19	B0970Y01	FOUR PLACE TERMINAL	10
20	4016876	FILM INSERT, 4 GEAR/TIE FINDER	1
21	4016513	MOUNT, VIBRATION ISOLATORS	8
22	F022138	DC-HX FLG NUT 1/4-20 GR5 ZP US	8
23	4016873	TIE FINDER MOUNT LH	1
24	4017017	TIE FINDER MOUNT RH	1
25	4012592	ANTENNA ASSEMBLY	4
26	A0036009	1/4-20X2 HHCAPSCREW	8
27	F013588	DC-1/4-20 ELAS STP NUT	8
28	F001106	DC-WROUGHT WASHER 1/4 Z.P. *	16
29	4018523	CABLE, DUAL PROBE AUTOMAG SYNC	1
30	4016560	BOX ASSEMBLY, AUTOMAG TIE SENSOR	2

CONFIDENTIAL

© COPYRIGHT 2001 HARSCO TRACK TECHNOLOGIES. THIS DRAWING OR DOCUMENT IS THE PROPERTY OF HARSCO TRACK TECHNOLOGIES AND EMBODIES CONFIDENTIAL INFORMATION, TRADE SECRET INFORMATION, AND/OR KNOW-HOW THAT IS THE PROPERTY OF HARSCO TRACK TECHNOLOGIES. BY ACCEPTING THIS DRAWING OR DOCUMENT, THE RECIPIENT AGREES (1) NOT TO PROVIDE, OR OTHERWISE MAKE AVAILABLE, THE DRAWING OR DOCUMENT, OR ANY INFORMATION OR KNOW-HOW EMBODIED THEREIN, TO ANY THIRD PARTY AND (2) NOT TO REPRODUCE OR USE THE DRAWING OR DOCUMENT TO MANUFACTURE ANY APPARATUS OR DEVICE, WITHOUT THE PRIOR WRITTEN AUTHORIZATION OF HARSCO TRACK TECHNOLOGIES.

SOLID EDGE DRAWING

IMPLIED TOLERANCES

ALL DIMENSIONS ARE IN INCHES - TOLERANCE UNLESS OTHERWISE SPECIFIED

NOMINAL SIZE RANGE OVER	TO	INCH PLUS OR MINUS 2 PLACE DECIMAL	3 PLACE DECIMAL	NOMINAL SIZE RANGE OVER	TO	METRIC PLUS OR MINUS 1 PLACE DECIMAL	2 PLACE DECIMAL
0	6	.03	.005	0	150	.8	.13
6	24	.04	.008	150	600	1.0	.20
24	-	.06	.010	-	600	1.5	.25

UNLESS OTHERWISE SPECIFIED ALL MACHINED SURFACES WILL HAVE:
A SURFACE FINISH OF 125 MICROINCHES
ANGULAR TOLERANCE OF ± .50°
CONCENTRICITY WITHIN .010

THIRD ANGLE PROJECTION

UNLESS OTHERWISE SPECIFIED ALL WELDS SHOULD ADHERE TO THE LATEST HTT WELDING SPECIFICATION 101

CHANGE	R/L	REVISION	DATE
ECN-101834	A	RELEASE	8/19/08
102190	B	DELETED IT-14, 3406231, IT-12 QTY WAS 7, ADDED IT-29 & 30	11/18/08

Description: KIT, JUPITER TIE FINDER

Drawing Number: ---------- KIT, JUPITER TIE FINDER

Machine Type

Model: 4018071.asm

Weight: 0.0 lbm

Scale: 1:4

Drawn: shuffstetler 8/19/08

APVD Eng: HW APVD Chkg: JR

Mat'l: - -

HTT
Harsco Track Technologies
Harsco
Columbia, SC

Part Number: 4018071 Size: D Sheet: 1 of 3

Plotted by shuffstetler on 1/13/2011 4018071.dft

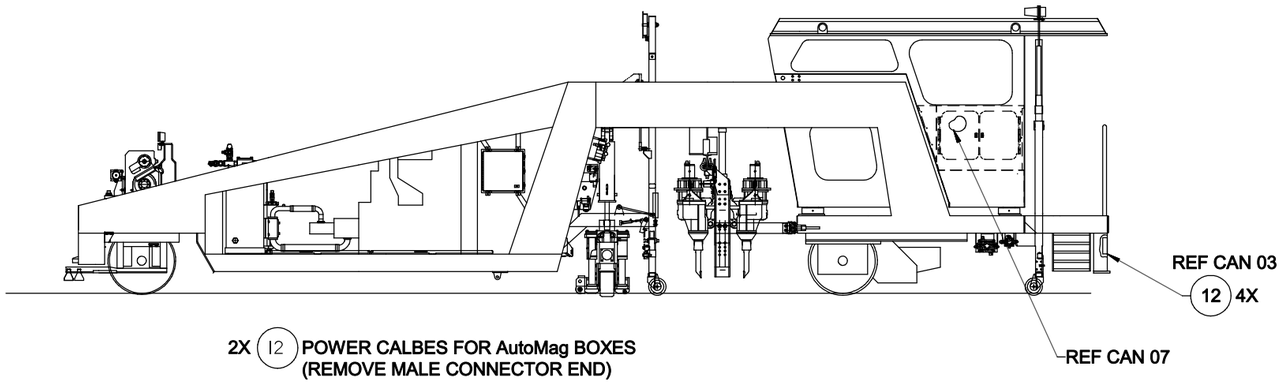

* DISCONNECT BATTERIES AND READ ALL NOTES FIRST.

NOTES:
1.1 REF BOLD TEXT AND GRAPHICS FOR ADDITIONS.
1.2 REF SENSOR CARRIAGE INSTALLATION DWG, ITEM 1.
CONNECT POWER SUPPLY OUTPUT, TO EACH M12 TIE FINDER SENSOR.
REF SCHEMATIC, CAN03, AND CONNECT 2 CABLES, IT-12, ONE SET TO EACH POWER SUPPLY INPUT. LABEL CABLES 07077 AND 08078 AS SHOWN.
1.3 REF MCB PANEL AND INSTALL ITS-4, 5, AND 11, RELAY COMPONETS.
INSTALL IT-18, TO CAN06 C1 & C8, AND CAN07 C5, AS SHOWN.
REF SCHEMATIC, CAN06, AND CAN07, AND NUMBER CABLES 01095, 05107, AND 08102. INSTALL IT-12, TO CAN07(C6) AS SHOWN.
CONNECT IT-14 TO IT-12. REF SCHEMATIC, CAN07, AND LABEL CABLE 06108.
1.4 REF ECP AND INSTALL ITS-6, 7, & 8, AUTO TAMP SWITCH ASSEMBLY.
1.5 WHEN ORDERING CL780, USE THE PART NUMBER 4018071CL780.
WHEN ORDERING CL781, USE THE PART NUMBER 4018071CL781.

**** NOTES CONTINUED ON SHEET 2 ****

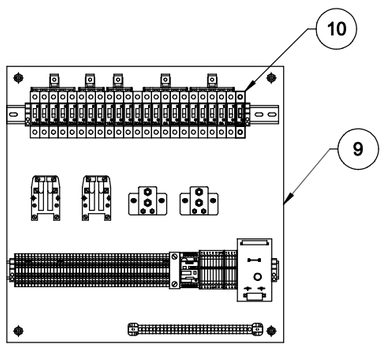

PDB PANEL

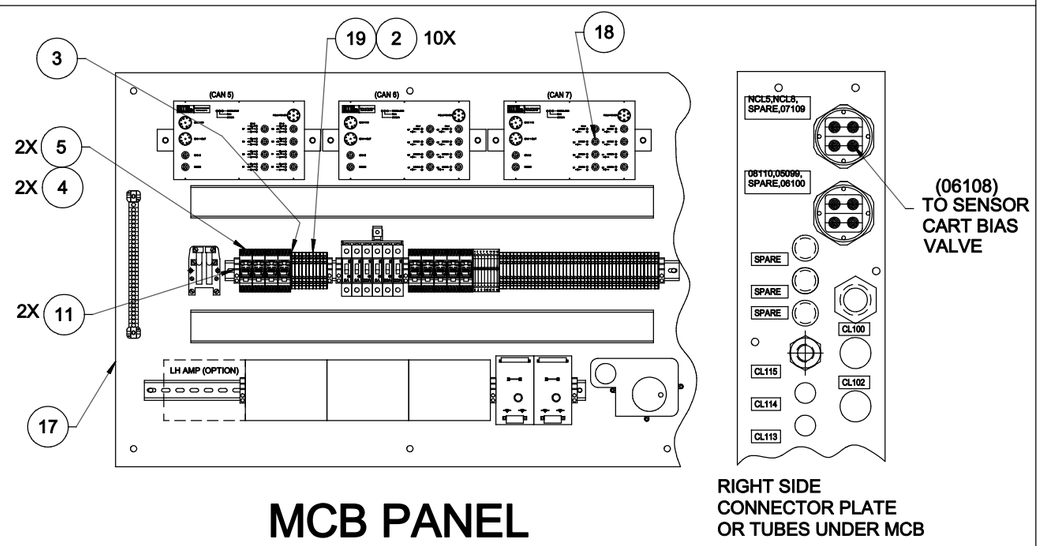

MCB PANEL

CABLE CONSTRUCTION CHART							
		BOX END		DEVICE END		CABLE	
CABLE NO.	WIRE NOS.	ITEM(QTY)	OUTER INSL STRIP (INCHES)	ITEM(QTY)	OUTER INSL STRIP (INCHES)	ITEM (QTY) (FEET)	CABLE P/N
CL780	0409,0410,000	15 (1)	24	N/A	3	16 (25)	4018071CL780
CL781	0410,000,SP1	N/A	24	N/A	3	16 (10)	4018071CL781

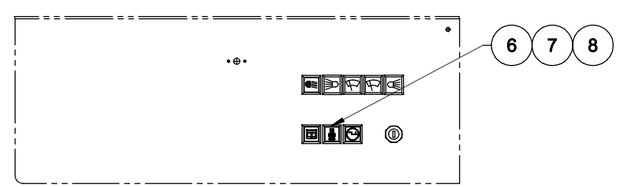

ECP

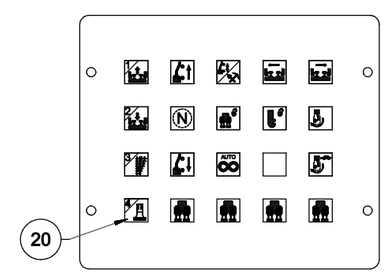

LEFT KEYPAD

CONFIDENTIAL
© COPYRIGHT 2001 HARSCO TRACK TECHNOLOGIES. THIS DRAWING OR DOCUMENT IS THE PROPERTY OF HARSCO TRACK TECHNOLOGIES AND EMBODIES CONFIDENTIAL INFORMATION, TRADE SECRET INFORMATION, AND/OR KNOW-HOW THAT IS THE PROPERTY OF HARSCO TRACK TECHNOLOGIES. BY ACCEPTING THIS DRAWING OR DOCUMENT, THE RECIPIENT AGREES (1) NOT TO PROVIDE, OR OTHERWISE MAKE AVAILABLE, THE DRAWING OR DOCUMENT, OR ANY INFORMATION OR KNOW-HOW EMBODIED THEREIN, TO ANY THIRD PARTY AND (2) NOT TO REPRODUCE OR USE THE DRAWING OR DOCUMENT TO MANUFACTURE ANY APPARATUS OR DEVICE, WITHOUT THE PRIOR WRITTEN AUTHORIZATION OF HARSCO TRACK TECHNOLOGIES.

SOLID EDGE DRAWING

IMPLIED TOLERANCES
ALL DIMENSIONS ARE IN INCHES - TOLERANCE UNLESS OTHERWISE SPECIFIED

NOMINAL SIZE RANGE OVER	TO	INCH PLUS OR MINUS 2 PLACE DECIMAL	3 PLACE DECIMAL	NOMINAL SIZE RANGE OVER	TO	METRIC PLUS OR MINUS 1 PLACE DECIMAL	2 PLACE DECIMAL
0	6	.03	.005	0	150	.8	.13
6	24	.04	.008	150	600	1.0	.20
24	-	.06	.010	-	600	1.5	.25

UNLESS OTHERWISE SPECIFIED ALL MACHINED SURFACE WILL HAVE:
A SURFACE FINISH OF 125 MICROINCHES
ANGULAR TOLERANCE OF ± .50°
CONCENTRICITY WITHIN .010

THIRD ANGLE PROJECTION

UNLESS OTHERWISE SPECIFIED ALL WELDS SHOULD ADHERE TO THE LATEST HTT WELDING SPECIFICATION 101

CHANGE	R/L	REVISION	DATE
ECN-101834	A	RELEASE	8/19/08
102190	B	DELETED IT-14, 3406231, IT-12 QTY WAS 7, ADDED IT-29 & 30	11/18/08

Description: KIT, JUPITER TIE FINDER
Drawing Number: KIT, JUPITER TIE FINDER
Machine Type:
Model: 4018071.asm
Weight: 0.0 lbm
Scale: 1:4
Drawn: shuffstetler
Date Drawn: 8/19/08
APVD Dwg: HW
APVD CADrg: JR
Mat'l: - -

HTT
Harsco Track Technologies
Harsco
Columbia, SC

Part Number: 4018071
Size: D
Sheet: 2 of 3

Plotted by shuffstetler on 11/13/2011 4018071.dft

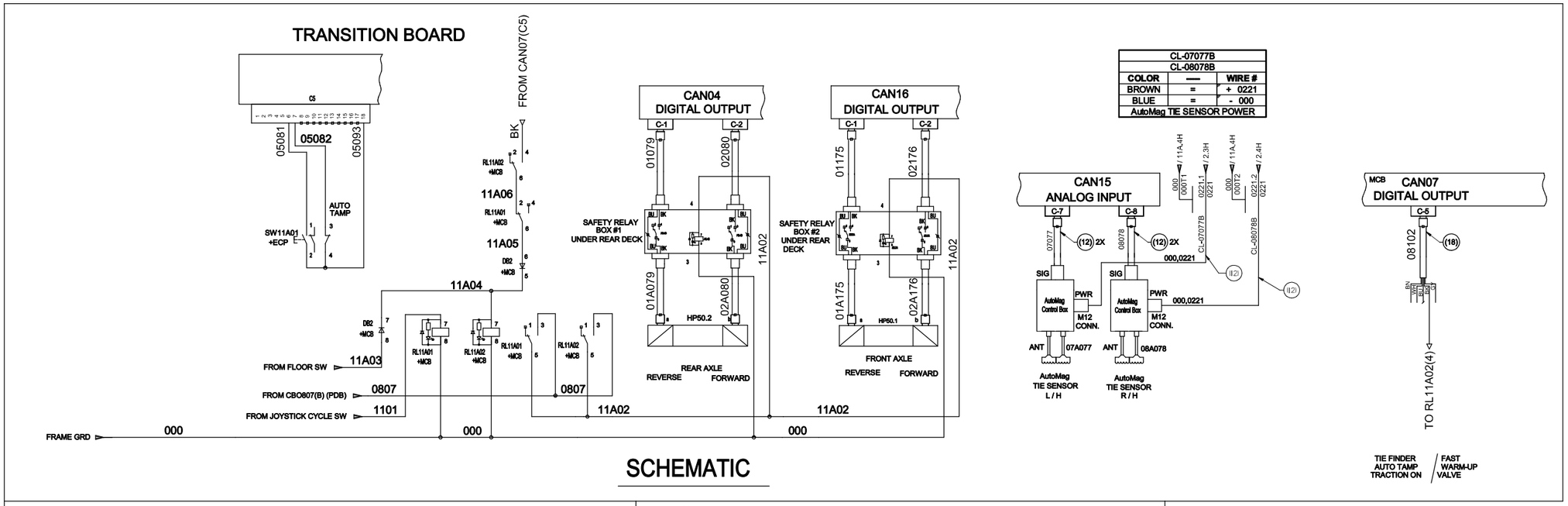

SCHEMATIC

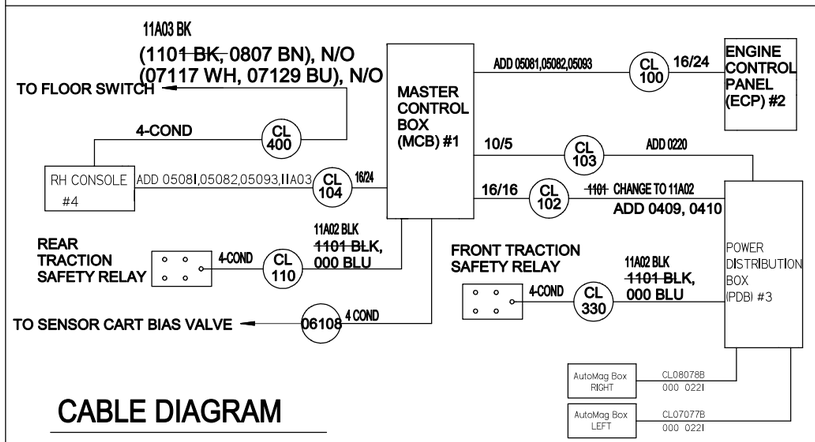

CABLE DIAGRAM

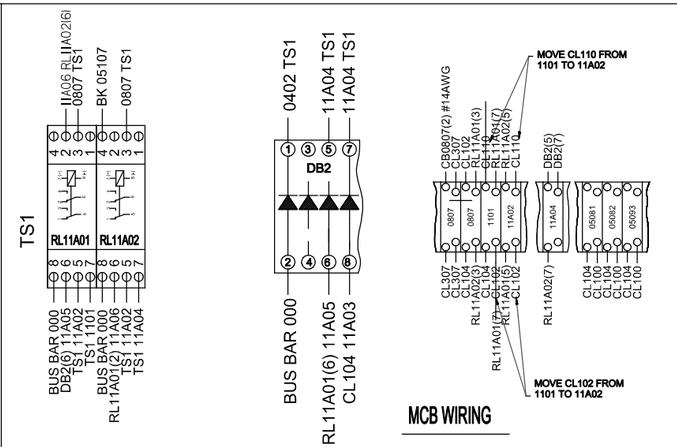

MCB WIRING

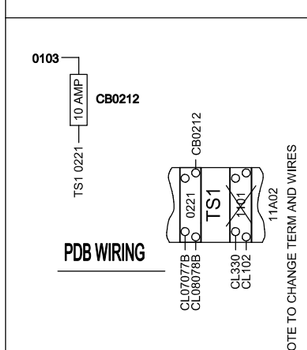

PDB WIRING

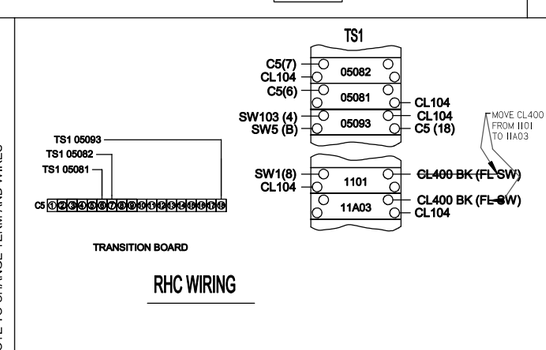

RHC WIRING

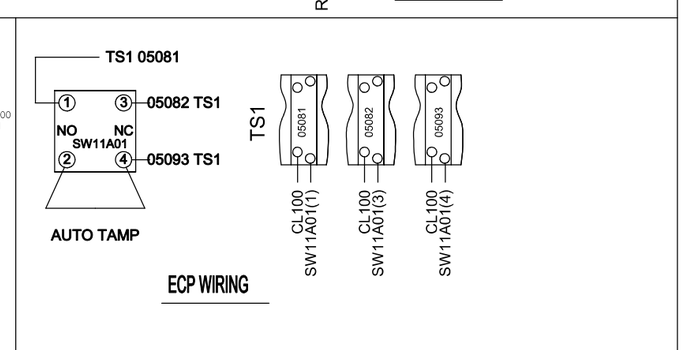

ECP WIRING

NOTES CONTINUED FROM SHEET 1.

2.1 REF CABLE DIAGRAM; ADD AND CHANGE WIRES TO BOXES AS SHOWN.
2.2 REF MCB WIRING AND NOTE WIRE CHANGES TO TS1 1101 AND 11A02. COMPLETE WIRING AS SHOWN.
2.3 REF ECP WIRING AND COMPLETE WIRING AS SHOWN.
2.4 REF RHC WIRING AND NOTE WIRE CHANGES TO TS1 1101 AND 11A03.
2.5 REF PDB WIRING AND CHANGE TS1 1101 TO 11A02, ALONG WITH CL330 AND CL102. COMPLETE WIRING AS SHOWN.
2.6 USE 16AWG WIRE UNLESS OTHERWISE SPECIFIED.

CONFIDENTIAL
© COPYRIGHT 2001 HARSCO TRACK TECHNOLOGIES. THIS DRAWING OR DOCUMENT IS THE PROPERTY OF HARSCO TRACK TECHNOLOGIES AND EMBODIES CONFIDENTIAL INFORMATION, TRADE SECRET INFORMATION, AND/OR KNOW-HOW THAT IS THE PROPERTY OF HARSCO TRACK TECHNOLOGIES. BY ACCEPTING THIS DRAWING OR DOCUMENT, THE RECIPIENT AGREES (1) NOT TO PROVIDE, OR OTHERWISE MAKE AVAILABLE, THE DRAWING OR DOCUMENT, OR ANY INFORMATION OR KNOW-HOW EMBODIED THEREIN, TO ANY THIRD PARTY AND (2) NOT TO REPRODUCE OR USE THE DRAWING OR DOCUMENT TO MANUFACTURE ANY APPARATUS OR DEVICE, WITHOUT THE PRIOR WRITTEN AUTHORIZATION OF HARSCO TRACK TECHNOLOGIES.

IMPLIED TOLERANCES
ALL DIMENSIONS ARE IN INCHES - TOLERANCE UNLESS OTHERWISE SPECIFIED

NORMAL SIZE RANGE OVER	TO	HIGH 2 PLACE DECIMAL	HIGH 3 PLACE DECIMAL	METRIC NORMAL SIZE RANGE OVER	TO	METRIC 1 PLACE DECIMAL	METRIC 2 PLACE DECIMAL
0	6	.03	.005	0	150	.8	.13
6	24	.04	.008	150	600	1.0	.20
24	-	.06	.010	-	600	1.5	.25

UNLESS OTHERWISE SPECIFIED ALL MACHINED SURFACES WILL HAVE:
A SURFACE FINISH OF 125 MICROINCHES
ANGULAR TOLERANCE OF ±.50°
CONCENTRICITY WITHIN .010

THIRD ANGLE PROJECTION

UNLESS OTHERWISE SPECIFIED ALL WELDS SHOULD ADHERE TO THE LATEST HTT WELD-ING SPECIFICATION 101

CHANGE	R/L	REVISION	DATE
ECN-101834	A	RELEASE	8/19/08
102190	B	DELETED IT-14, 3406231, IT-12 QTY WAS 7, ADDED IT-29 & 30	11/18/08

Description: KIT, JUPITER TIE FINDER
Drawing Number: ———— KIT, JUPITER TIE FINDER
Machine Type
Model: 4018071.asm
Drawn: shuffstetler
Date Drawn: 8/19/08
Weight: 0.0 lbm
Scale: 1:4
APVD Dwg: HW
APVD Chkng: JR
Mat'l: - -

HTT
Harsco Track Technologies
Harsco
Columbia, SC

Part Number: 4018071
Size: D
Sheet: 3 of 3

SOLID EDGE DRAWING

Plotted by shuffstetler on 11/13/2011 4018071.dft

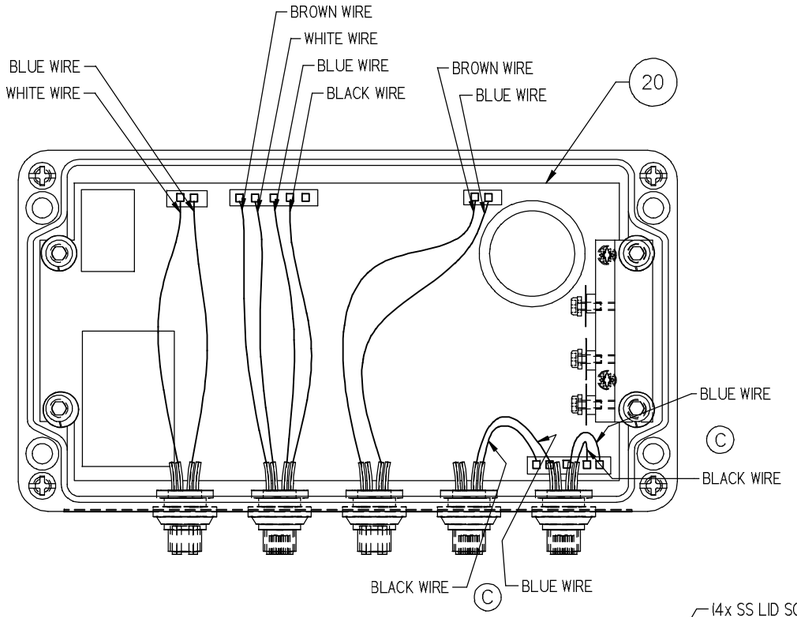

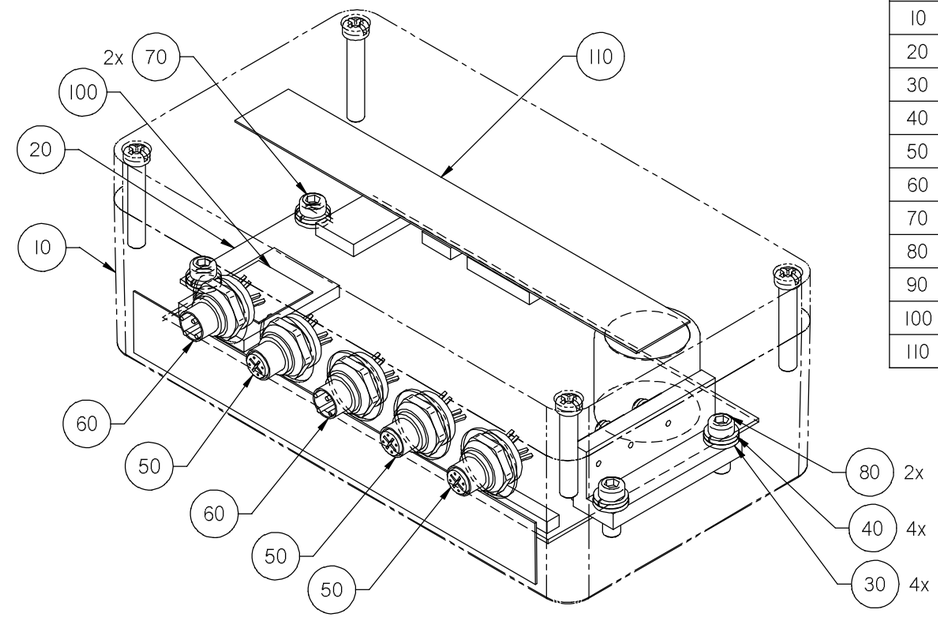

ITEM	PART NO	QTY	DESCRIPTION
10	4018444	1	ENCLOSURE MACHINING
20	4015289	1	PCB ASSEMBLY, MAIN BOARD
30	4012572	4	WASHER, FLAT M6 SS
40	4012573	4	WASHER, LOCK M6 SS
50	H5134Y09	3	4 PIN RR MT FEMALE RCPT
60	H5134Y08	2	4 PIN RR MT MALE RCPT
70	4018493	2	SCREW, M6 X 10MM SS
80	4018494	2	SCREW, SOCKET HEAD M6 X 16MM SS
90	4018491	1	LABEL, AUTOMAG
100	4018926	1	LABEL, AUTOMAG PCB
110	4018925	1	LABEL, AUTOMAG LID

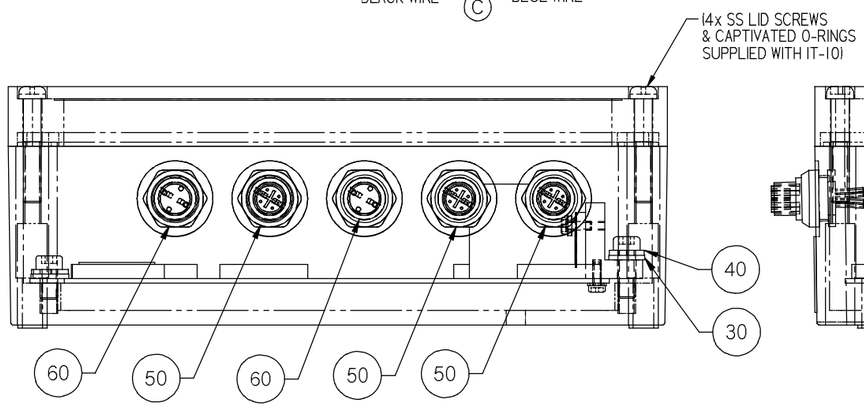

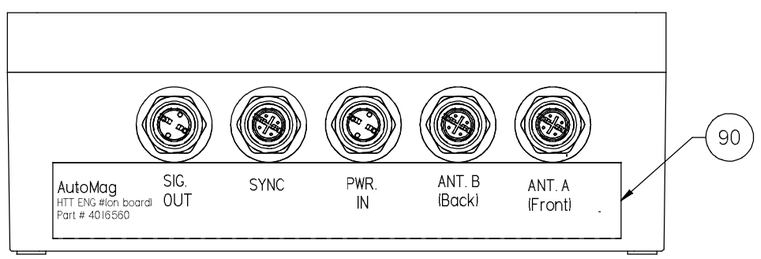

REFERENCE - LABEL DETAILS

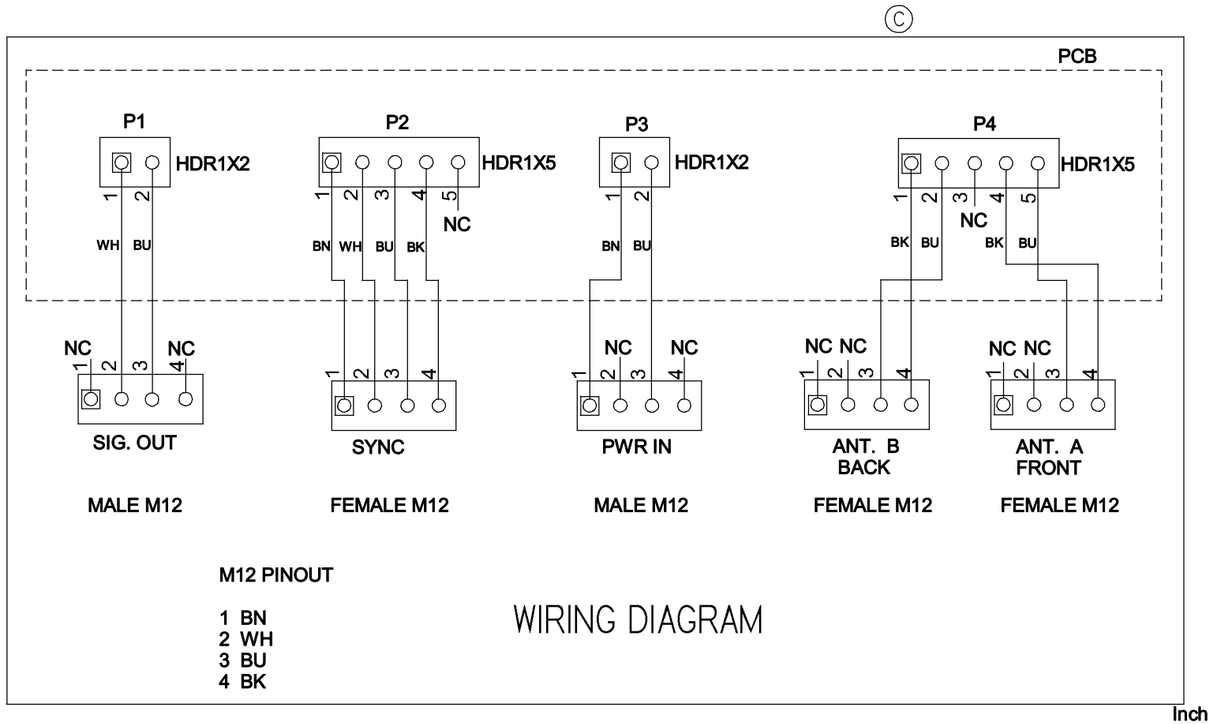

WIRING DIAGRAM

NOTES:

1. INNER SURFACE OF ENCLOSURE, ITEM 10, MUST BE CLEAN AND DRY, BEFORE ASSEMBLING ALL OTHER PARTS.
2. ITEMS 30 & 40 REPLACE WASHERS SUPPLIED WITH ENCLOSURE, ITEM 10.
3. ENCLOSURE SHOWN AS PHANTOM IN SOME VIEWS TO SHOW INTERIOR PARTS.
4. ITEMS 70 & 80 REPLACE COPPER SCREWS SUPPLIED WITH ENCLOSURE, ITEM 10
5. TEST AFTER ASSEMBLY.

CONFIDENTIAL
© COPYRIGHT 2011 HARSCO. THIS DRAWING OR DOCUMENT IS THE PROPERTY OF HARSCO AND EMBODIES CONFIDENTIAL INFORMATION, TRADE SECRET INFORMATION, AND/OR KNOW-HOW THAT IS THE PROPERTY OF HARSCO. BY ACCEPTING THIS DRAWING OR DOCUMENT, THE RECIPIENT AGREES (1) NOT TO PROVIDE, OR OTHERWISE MAKE AVAILABLE, THE DRAWING OR DOCUMENT, OR ANY INFORMATION OR KNOW-HOW EMBODIED THEREIN, TO ANY THIRD PARTY AND (2) NOT TO REPRODUCE OR USE THE DRAWING OR DOCUMENT TO MANUFACTURE ANY APPARATUS OR DEVICE, WITHOUT THE PRIOR WRITTEN AUTHORIZATION OF HARSCO.

NOMINAL SIZE RANGE		INCH PLUS OR MINUS	
OVER	TO	2 PLACE DECIMAL	3 PLACE DECIMAL
0	6	.03	.005
6	24	.04	.008
24	-	.06	.010

NOMINAL SIZE RANGE		METRIC PLUS OR MINUS	
OVER	TO	1 PLACE DECIMAL	2 PLACE DECIMAL
0	150	.5	.13
150	600	1.0	.20
600	-	1.5	.25

UNLESS OTHERWISE SPECIFIED ALL MACHINED SURFACES WILL HAVE; A SURFACE FINISH OF 125 MICROINCHES ANGULAR TOLERANCE OF ± .05° CONCENTRICITY WITHIN .010

THIRD ANGLE PROJECTION

UNLESS OTHERWISE SPECIFIED, ALL WELDS SHOULD ADHERE TO THE MOST CURRENT A.W.S WELDING STANDARDS

CHANGE	R/L	REVISION	DR	DATE
102039	A	RELEASE	–	09-17-08
102599	B	WIRES REORGANIZED; SIG OUT & SYNC POSITIONS WERE SWITCHED	BBR	03-03-09
EC502389	C	BLUE & BLACK WIRES SWITCHED, WIRING DIAGRAM ADDED	BPA	11-22-11

Description: BOX ASSEMBLY, AUTOMAG TIE SENSOR

HARSCO RAIL

Material: -; -
Machine Type: AutoMag
Size: D
Weight: 5.0 lbm
Drawn: bpayyadakkath
Date Drawn: 11/22/2011
Part Number: 4016560
Sheet: 1 of 1

SOLID EDGE DRAWING

DO NOT SCALE

Inch
[mm]

NOTES:

1/ ITEM 2 CABLE IS 3 METERS LONG; CUT TO 42 INCHES LONG. STRIP JACKET 1 1/4 INCH, STRIP 1/4 INCH INSULATION FROM CABLE WIRES #3 AND #4, CUT REMAINING WHITE WIRES FLUSH WITH JACKET.

2/ ITEM 3 WIRE TO START INSIDE END CAVITY OF ITEM 1, THEN THRU HOLE TO GROOVE. WINDING TO BE CLOCKWISE (AS VIEWED FROM 6.00 DIA. END) FOR A TOTAL OF 40 TURNS. WIND WIRE IN NUMERICAL ORDER, AS SHOWN IN DETAIL A. AFTER 40 TURNS, FEED WIRE THRU HOLE TO END CAVITY. SAND OVER-COATING FROM BOTH WIRE ENDS, LEAVING 3/8 INCH EXPOSED IN END CAVITY, AND SOLDER TO CABLE WIRES #3 AND #4. USE SHRINK TUBING OVER SPLICE, THEN FOLD INTO BASE OF END CAVITY.

3/ CONNECT CABLE WIRE #3 TO COIL END OF EXITING HOLE NEAREST BOTTOM OF END CAVITY.

4/ TEST - OHMMETER SHOULD READ FROM 0.6 TO 0.8 OHMS.

5/ FILL ITEM 1 END CAVITY FLUSH, WITH ELECTRONIC GRADE SEALANT, P/N H5527Y03. COAT THREADS OF ITEM 4 AND FILL ITEM 1 TOP CAVITY WITH ELECTRONIC GRADE SEALANT, P/N H5527Y03. SCREW ITEM 4 TO ITEM 1 AND REMOVE SQUEEZED OUT EXCESS.

6/ FILL GROOVE OVER WIRE WINDINGS FLUSH TO O.D. OF ITEM 1 WITH BLACK SILICONE SEALANT P/N A5196Y02.

7/ APPLY ANTENNA LABEL AROUND ANTENNA CABLE USING P-TOUCH LABEL MAKER.

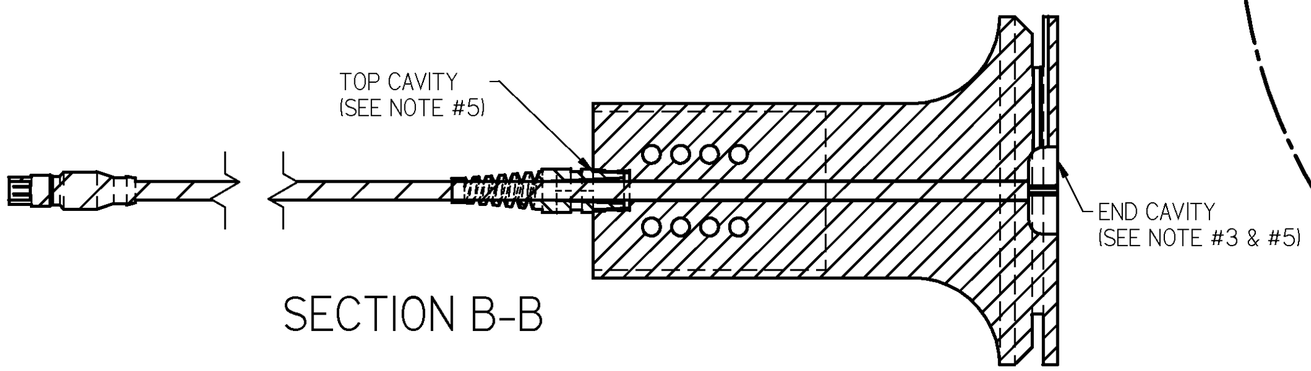

SECTION B-B

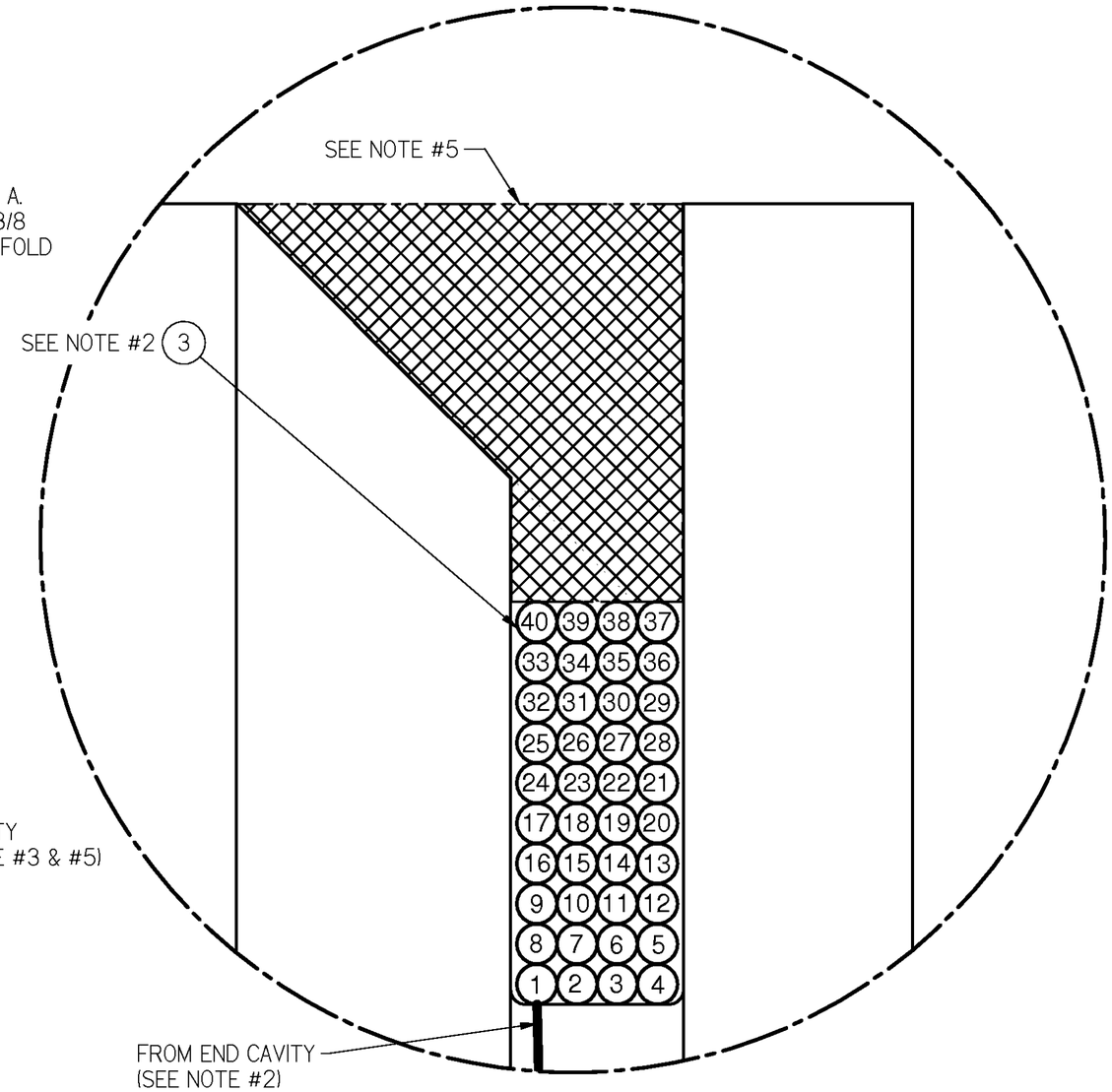

DETAIL A
8:1

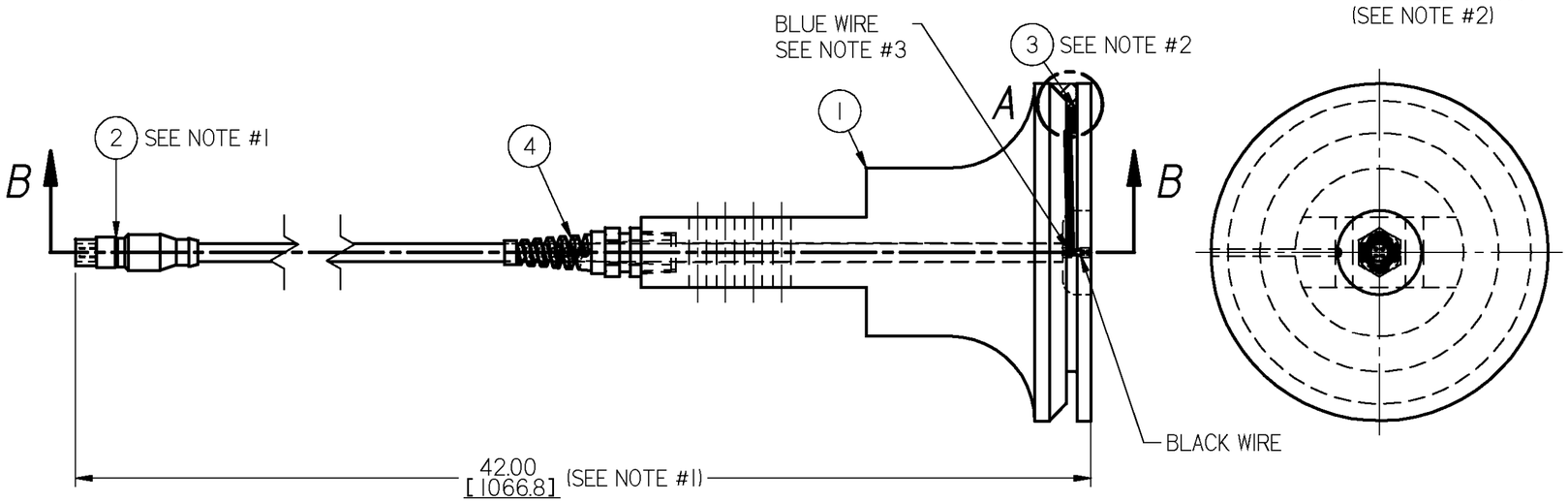

Item Number	Part Number	Description	Quantity
1	4012290	ANTENNA BODY	1
2	3401330	CL ASSY M12, M/PIG, 3M	1
3*	4012591	MAGNET WIRE 18 AWG (FT)	52
4	4025984	CORDGRIP STRAIN RELIEF	1

SOLID EDGE DRAWING

CONFIDENTIAL
© COPYRIGHT 2001 HARSCO TRACK TECHNOLOGIES. THIS DRAWING OR DOCUMENT IS THE PROPERTY OF HARSCO TRACK TECHNOLOGIES AND EMBODIES CONFIDENTIAL INFORMATION, TRADE SECRET INFORMATION, AND/OR KNOW-HOW THAT IS THE PROPERTY OF HARSCO TRACK TECHNOLOGIES. BY ACCEPTING THIS DRAWING OR DOCUMENT, THE RECIPIENT AGREES (1) NOT TO PROVIDE, OR OTHERWISE MAKE AVAILABLE, THE DRAWING OR DOCUMENT, OR ANY INFORMATION OR KNOW-HOW EMBODIED THEREIN, TO ANY THIRD PARTY AND (2) NOT TO REPRODUCE OR USE THE DRAWING OR DOCUMENT TO MANUFACTURE ANY APPARATUS OR DEVICE, WITHOUT THE PRIOR WRITTEN AUTHORIZATION OF HARSCO TRACK TECHNOLOGIES.

IMPLIED TOLERANCES
ALL DIMENSIONS ARE IN INCHES - TOLERANCE UNLESS OTHERWISE SPECIFIED

INCH NOMINAL SIZE RANGE OVER	TO	2 PLACE DECIMAL	3 PLACE DECIMAL	METRIC NOMINAL SIZE RANGE OVER	TO	1 PLACE DECIMAL	2 PLACE DECIMAL
0	6	.03	.005	0	150	.8	.13
6	24	.04	.008	150	600	1.0	.20
24	-	.06	.010	-	600	1.5	.25

UNLESS OTHERWISE SPECIFIED ALL MACHINED SURFACES WILL HAVE;
A SURFACE FINISH OF 125 MICROINCHES
ANGULAR TOLERANCE OF ± .50°
CONCENTRICITY WITHIN .010

THIRD ANGLE PROJECTION

UNLESS OTHERWISE SPECIFIED ALL WELDS SHOULD ADHERE TO THE LATEST HTT WELDING SPECIFICATION 101

CHANGE	R/L	REVISION	DATE
100808	A	NEW RELEASE	11-02-06
100969	B	PICT CHG IT-1; IT-2 CABLE (CUT) LENGTH WAS 39.37; ADDED NOTE #5; CHG ORDER OF NOTES 3 & 5 CJW/JOC	03-02-07
104565	C	ADDED IT-4; UPDATED VIEWS & NOTES. LR/HW	11-13-09

Description: ANTENNA ASSEMBLY
Drawing Number: ----------
Machine Type: AutoMag
Model: 4012592.asm
Drawn: C.J.Wolf
Date Drawn: 11-02-06
Weight: 4.274 lbm
Scale: 1:2
APVD Desg: JBR
APVD ChEng: KK
Matl:

HTT
Harsco Track Technologies
Harsco
Columbia, SC

Part Number: 4012592
Size: C
Sheet: 1 of 1

Plotted by lroldan on 11/18/2009 4012592.dft

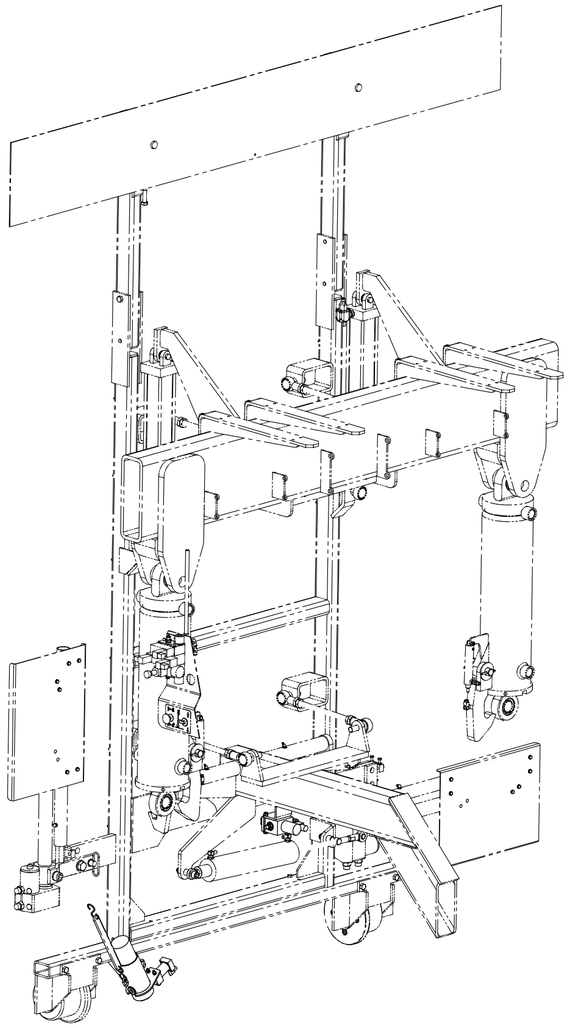

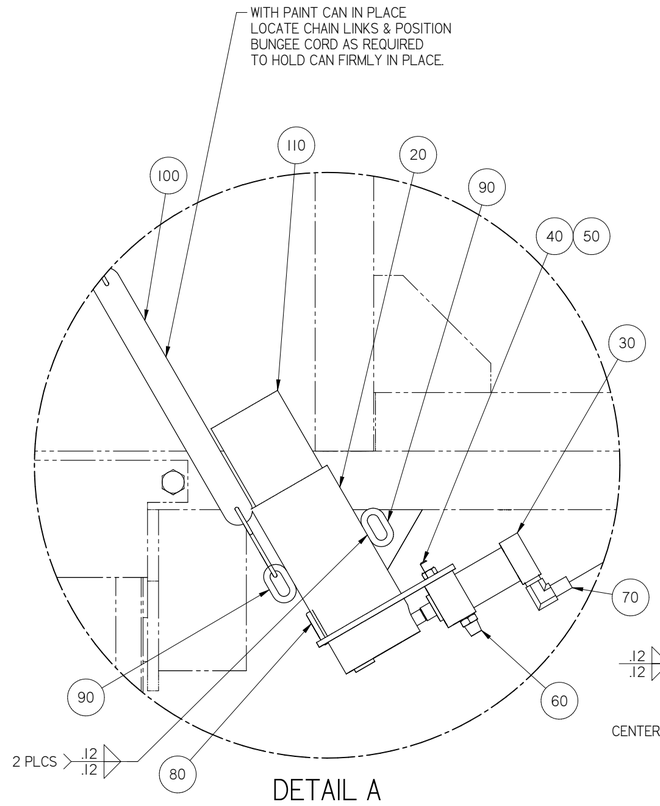

DETAIL A

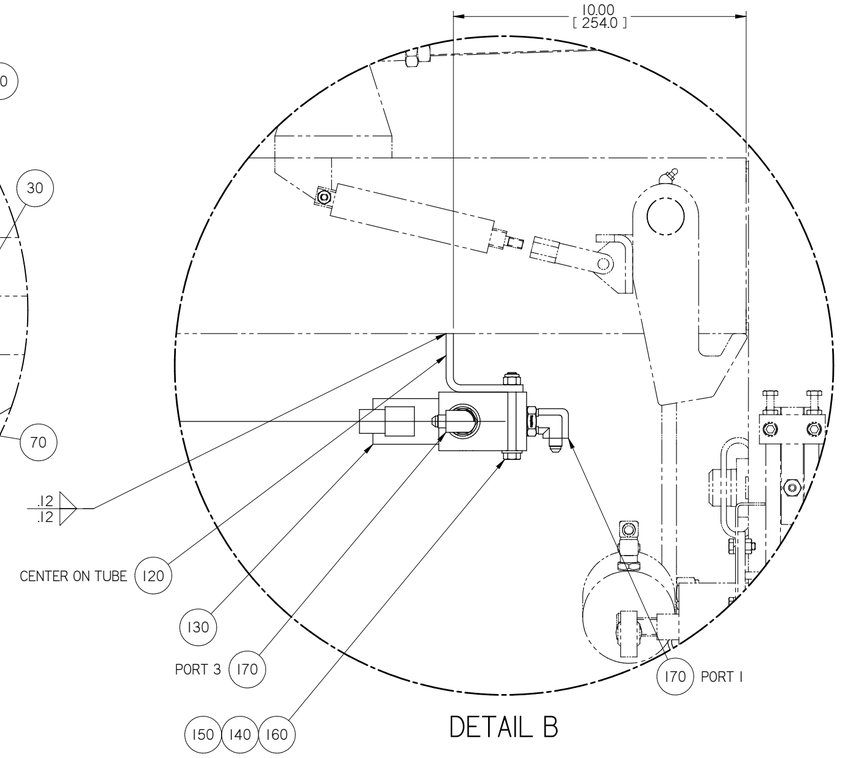

DETAIL B

ITEM	PART NO	QTY	DESCRIPTION
20	5008168	1	PAINT HOLDER WELDMENT
30	151869-1	1	CYLINDER- AIR, 1.12B-1.00S-.50R
40	F014073	2	1/4-20 X 2 SH CS
50	153140-420	2	1/4-20 NYLON INS NUT
60	152374-1	2	BREATHER 1/4 NPT
70	150198-4	1	ADAPTER 90 DEG 4NPT X 4JIC
80	155374-1	1	GROMMET
90*	157666-1	1	CHAIN, COMMON (2 LINKS)
100	251305-1	1	TARP FASTENERS, RUBBER
110	2001042	1	MARKER PAINT - ORANGE
120	4014188	1	BRACKET, SOLV. MTG.
130	A0730Y04	1	VALVE, 3 WAY SOL OP
140	F018615	2	SAE FLAT WASHER .3125
150	F014476	2	5/16 ELASTIC STOP NUT
160	F012888	2	5/16-18 X 2 3/4 HHCS U/F012888
170	0-3304017-0-26	2	1/2 X 1/4 X 90 DEG ORB FTG
180	091950	1	STR 4FPTX8SAE
B 190*	4022348	1	CABLE, M12/M DINA DIODE 1J4 5M

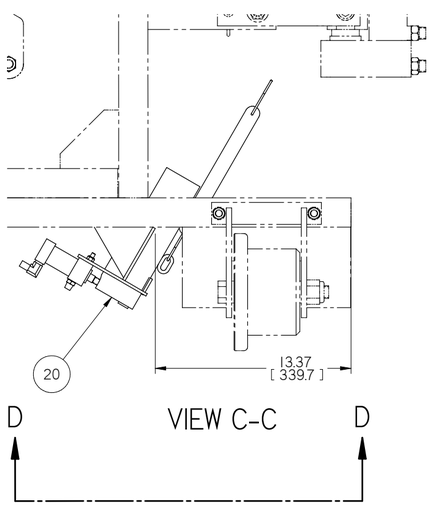

VIEW C-C

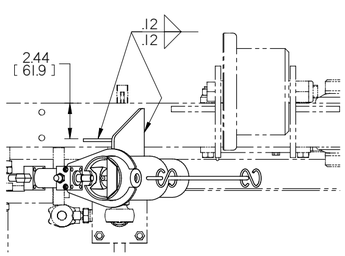

VIEW D-D

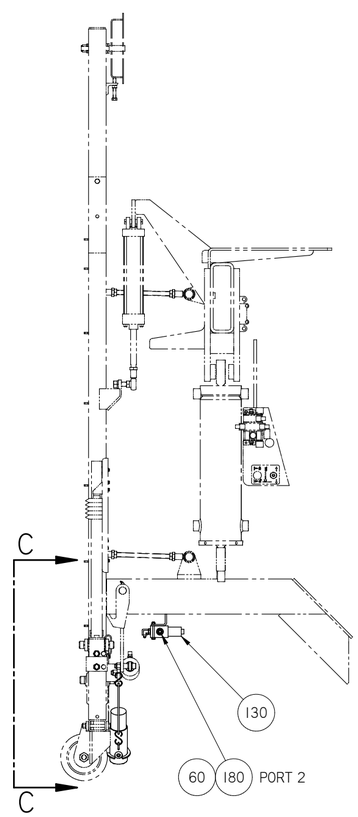

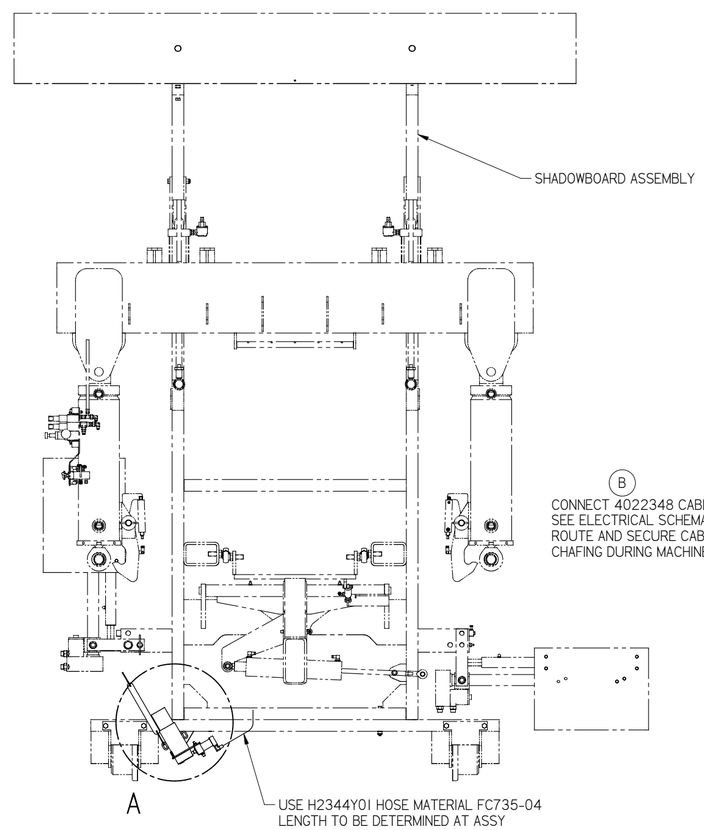

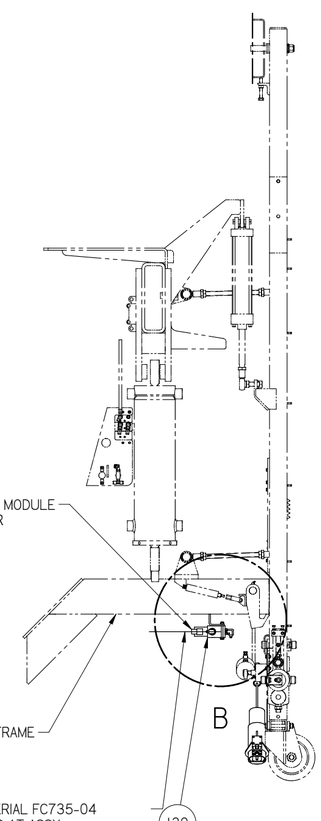

CONFIDENTIAL
© COPYRIGHT 2011 HARSCO. THIS DRAWING OR DOCUMENT IS THE PROPERTY OF HARSCO AND EMBODIES CONFIDENTIAL INFORMATION, TRADE SECRET INFORMATION, AND/OR KNOW-HOW THAT IS THE PROPERTY OF HARSCO. BY ACCEPTING THIS DRAWING OR DOCUMENT, THE RECIPIENT AGREES (1) NOT TO PROVIDE, OR OTHERWISE MAKE AVAILABLE, THE DRAWING OR DOCUMENT, OR ANY INFORMATION OR KNOW-HOW EMBODIED THEREIN, TO ANY THIRD PARTY AND (2) NOT TO REPRODUCE OR USE THE DRAWING OR DOCUMENT TO MANUFACTURE ANY APPARATUS OR DEVICE, WITHOUT THE PRIOR WRITTEN AUTHORIZATION OF HARSCO.

NOMINAL HOLE SIZE	INCH PLUS OR MINUS		NOMINAL HOLE SIZE	METRIC PLUS OR MINUS	
OVER	TO	2 PLACE DECIMAL	3 PLACE DECIMAL	OVER	TO	1 PLACE DECIMAL	2 PLACE DECIMAL
0	6	.03	.005	0	150	.8	.13
6	24	.04	.008	150	600	1.0	.20
24	-	.06	.010	600	-	1.5	.25

UNLESS OTHERWISE SPECIFIED ALL MACHINED SURFACES WILL HAVE:
A SURFACE FINISH OF 125 MICRO-INCHES
ANGULAR TOLERANCE OF ± .50°
CONCENTRICITY WITHIN .015

THIRD ANGLE PROJECTION

UNLESS OTHERWISE SPECIFIED, ALL WELDS SHOULD ADHERE TO THE MOST CURRENT A.W.S WELDING STANDARDS

CHANGE	R/L	REVISION	DR	DATE
EC501042	A	DRAWING RELEASED	JWA	05-04-11
EC502645	B	4022348 WAS 4022371	JWA	01-25-12

Description: TIE MARKER OPTION

HARSCO RAIL

Material: -; -
Machine Type: MARK IV CP
Size: E
Weight: 0.0 lbm
Drawn: jarmbrust
Date Drawn: 1/10/2012
Part Number: 5008098
Sheet: 1 of 1
SOLID EDGE DRAWING
DO NOT SCALE

Inch
[mm]

ITEM	PART NUMBER	DESCRIPTION	QTY
1	G5330YAA	LUBE BLOCK WELDMENT	4
2	C8555Y14	MICRO HOSE (FT)	30
3	C8555Y15	MICRO HOSE FITTING	18
4	A0036070	3/8-16 X 2 1/2 CAPSCREW	8
5	L420853	90DEG. MALE PIPE USE F010677	8
6	F002035	1/8 PIPE PLUG	8
7	L424112	ORDER F024035	8
8	0-3305022-0-20	WELD ADAPTER	4
9	L40388	NUT ELASTIC STOP 5/16-18	4
10	0-3202000-0-22	HOSE CLAMP	4
11	L425183	90 DEG. FITTING	8
12	L420492	STANDARD TIE	16

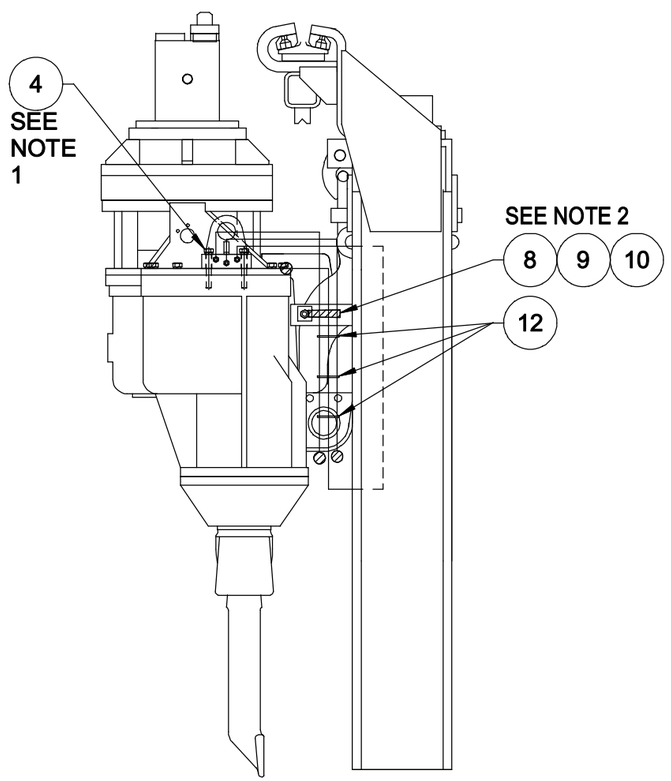

TYPICAL FOR ALL VIBRATORS

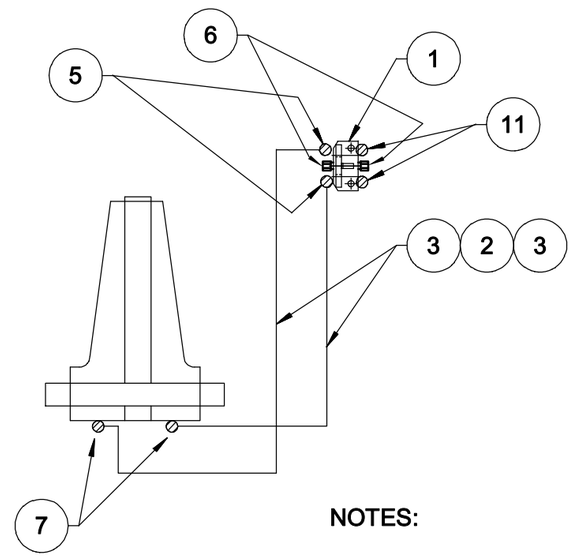

NOTES:

1. REUSE EXISTING LOCKWASHERS

2. WELD THE WELD ADAPTOR W/ 5/16 BOLT TO BUMPER SCREW BOSS ON VIBRATOR CARRIER FOR CLAMP INSTALLATION.

SOLID EDGE DRAWING

CONFIDENTIAL
© COPYRIGHT 2001 HARSCO TRACK TECHNOLOGIES. THIS DRAWING OR DOCUMENT IS THE PROPERTY OF HARSCO TRACK TECHNOLOGIES AND EMBODIES CONFIDENTIAL INFORMATION, TRADE SECRET INFORMATION, AND/OR KNOW-HOW THAT IS THE PROPERTY OF HARSCO TRACK TECHNOLOGIES. BY ACCEPTING THIS DRAWING OR DOCUMENT, THE RECIPIENT AGREES (1) NOT TO PROVIDE, OR OTHERWISE MAKE AVAILABLE, THE DRAWING OR DOCUMENT, OR ANY INFORMATION OR KNOW-HOW EMBODIED THEREIN, TO ANY THIRD PARTY AND (2) NOT TO REPRODUCE OR USE THE DRAWING OR DOCUMENT TO MANUFACTURE ANY APPARATUS OR DEVICE, WITHOUT THE PRIOR WRITTEN AUTHORIZATION OF HARSCO TRACK TECHNOLOGIES.

IMPLIED TOLERANCES
ALL DIMENSIONS ARE IN INCHES - TOLERANCE UNLESS OTHERWISE SPECIFIED

INCH NOMINAL SIZE RANGE OVER	TO	PLUS OR MINUS 2 PLACE DECIMAL	3 PLACE DECIMAL	METRIC NOMINAL SIZE RANGE OVER	TO	PLUS OR MINUS 1 PLACE DECIMAL	2 PLACE DECIMAL
0	6	.03	.005	0	150	.8	.13
6	24	.04	.008	150	600	1.0	.20
24	-	.06	.010	-	600	1.5	.25

UNLESS OTHERWISE SPECIFIED ALL MACHINED SURFACES WILL HAVE:
A SURFACE FINISH OF 125 MICROINCHES
ANGULAR TOLERANCE OF +-.20°
CONCENTRICITY WITHIN .010

THIRD ANGLE PROJECTION

UNLESS OTHERWISE SPECIFIED ALL WELDS SHOULD ADHERE TO THE LATEST HTT WELDING SPECIFICATION 101

CHANGE	R/L	REVISION	DATE
101272	A	RELEASE	8-27-07

Description: WORKHEAD GREASE KIT
Drawing Number: ——————
Model: 4014782.dft
Weight: ———
Mat'l: ———
Scale: 1:4
Machine Type: MARK VI
Drawn: mflaming
Date Drawn: 8-27-07
APVD Dwg: JBR
APVD Chkg: JBR

HTT
Harsco Track Technologies
Harsco
Columbia, SC

Part Number: 4014782
Size: D
Sheet: 1 OF 1

Plotted by colcadadm on 9/9/2010 4014782.dft

CONFIDENTIAL

© COPYRIGHT 2001 HARSCO TRACK TECHNOLOGIES. THIS DRAWING OR DOCUMENT IS THE PROPERTY OF HARSCO TRACK TECHNOLOGIES AND EMBODIES CONFIDENTIAL INFORMATION, TRADE SECRET INFORMATION, AND/OR KNOW-HOW THAT IS THE PROPERTY OF HARSCO TRACK TECHNOLOGIES. BY ACCEPTING THIS DRAWING OR DOCUMENT, THE RECIPIENT AGREES (1) NOT TO PROVIDE, OR OTHERWISE MAKE AVAILABLE, THE DRAWING OR DOCUMENT, OR ANY INFORMATION OR KNOW-HOW EMBODIED THEREIN, TO ANY THIRD PARTY AND (2) NOT TO REPRODUCE OR USE THE DRAWING OR DOCUMENT TO MANUFACTURE ANY APPARATUS OR DEVICE, WITHOUT THE PRIOR WRITTEN AUTHORIZATION OF HARSCO TRACK TECHNOLOGIES.

SOLID EDGE DRAWING

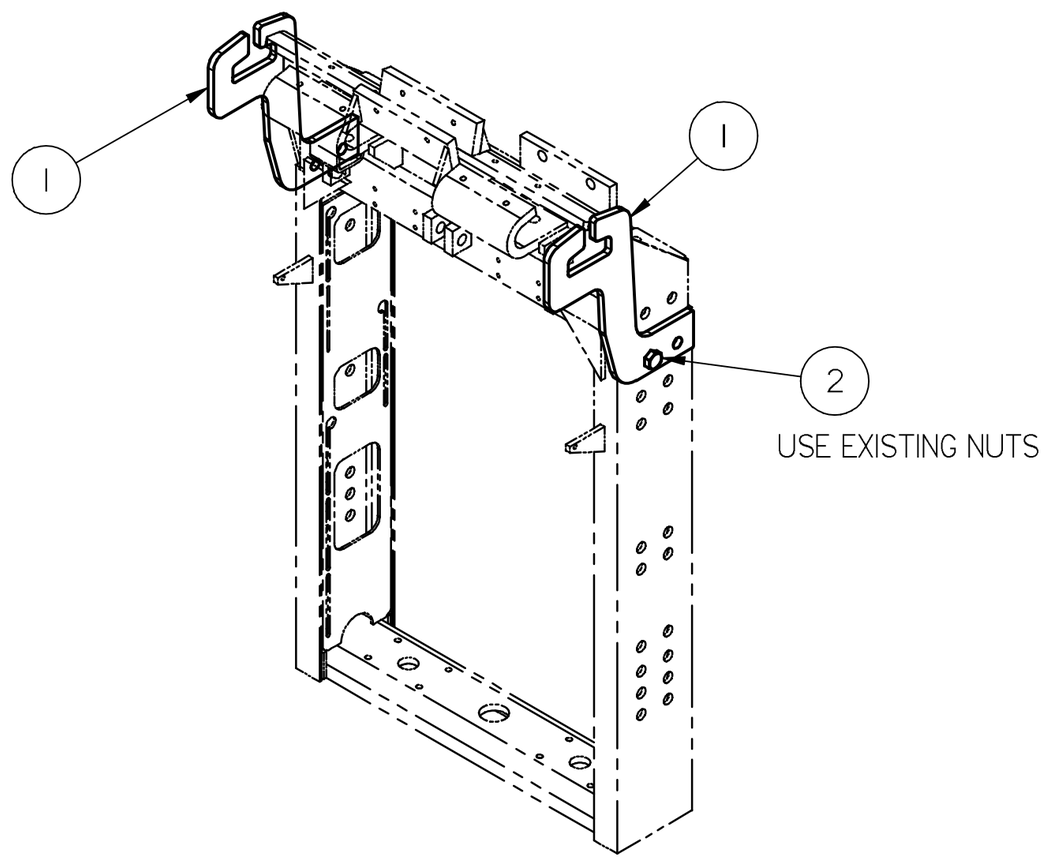

Item Number	Part Number	Description	Quantity
1	4015059	SUPPORT, WORKHEAD SAFETY	2
2	F003772	HHCS 3/4-10 X 2 3/4 GR5	4

IMPLIED TOLERANCES

ALL DIMENSIONS ARE IN INCHES - TOLERANCE UNLESS OTHERWISE SPECIFIED

NOMINAL SIZE RANGE		INCH PLUS OR MINUS		NOMINAL SIZE RANGE		METRIC PLUS OR MINUS	
OVER	TO	2 PLACE DECIMAL	3 PLACE DECIMAL	OVER	TO	1 PLACE DECIMAL	2 PLACE DECIMAL
0	6	.03	.005	0	150	.8	.13
6	24	.04	.008	150	600	1.0	.20
24	-	.06	.010	-	600	1.5	.25

UNLESS OTHERWISE SPECIFIED ALL MACHINED SURFACES WILL HAVE;
A SURFACE FINISH OF 125 MICROINCHES
ANGULAR TOLERANCE OF ±.50°
CONCENTRICITY WITHIN .010

THIRD ANGLE PROJECTION

UNLESS OTHERWISE SPECIFIED ALL WELDS SHOULD ADHERE TO THE LATEST HTT WELDING SPECIFICATION 101

CHANGE	R/L	REVISION	DATE
101286	A	RELEASE	------

Description: WORKHEAD SAFETY SUPPORT INSTL

Drawing Number: ---------- WORKHEAD SAFETY SUPPORT INSTL

Machine Type:

Model: 4015058.asm

Drawn: aouzts

Date Drawn: 25 SEP 07

Weight: 0.0 lbm

Scale:

APVD Desg: JBR

APVD ChEng: JBR

Mat'l: - -

HTT
Harsco Track Technologies
Harsco
Columbia, SC

Part Number: 4015058

Size: B

Sheet: 1 of 1

Plotted by colcadadm on 9/9/2010 4015058.dft

JACKING COMPONENTS

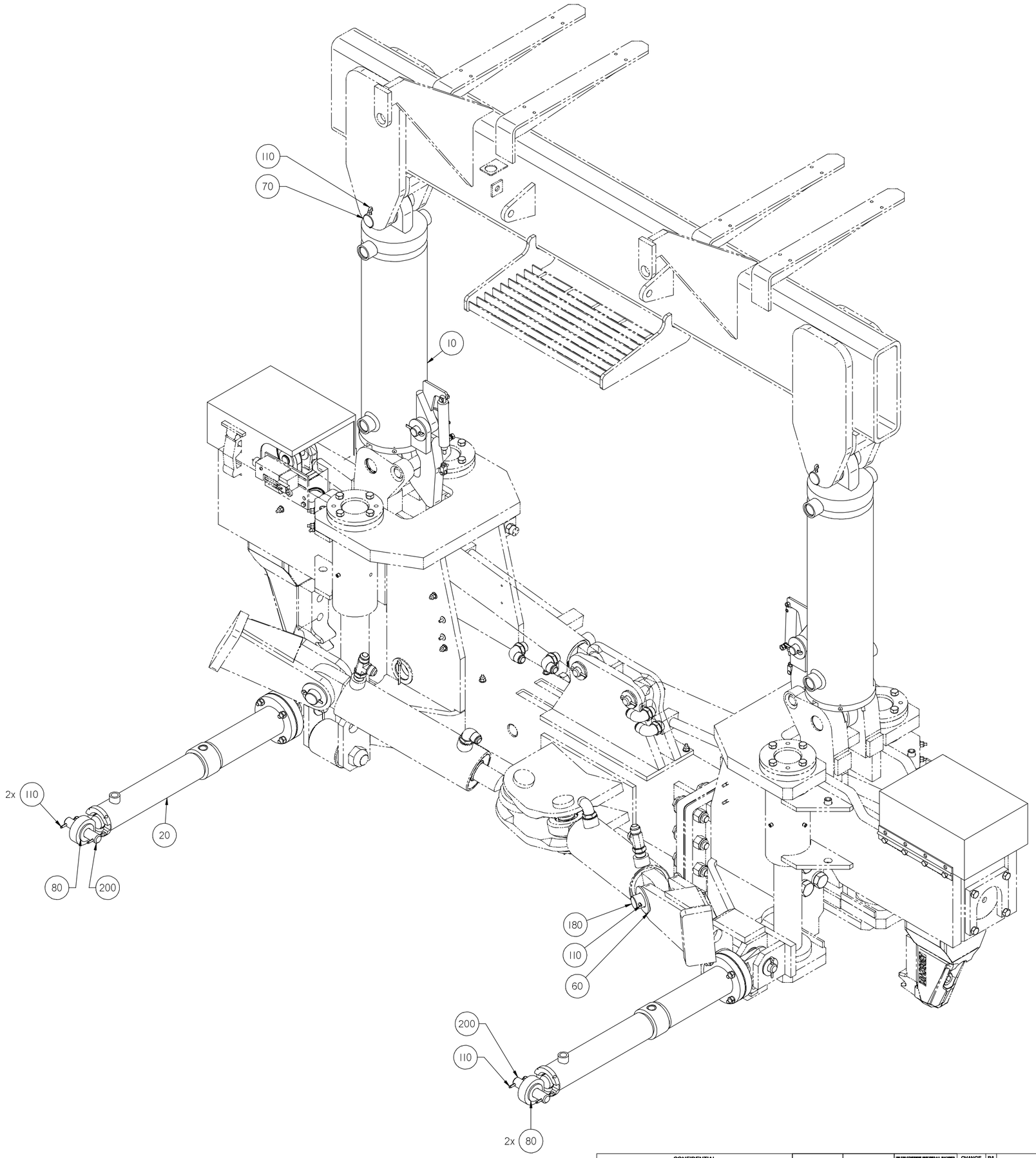

ITEM	PART NO	DESCRIPTION	QTY
10	B5715XAE	6 X 2 X 20 CYLINDER ASSEMBLY	2
20	B7036WAC	SLEW CYL ASSY	2
30	D7190T06	WASHER/SPACER	12
40	A6030Y05	SPACER	6
50	0-1305801-0-01	INSULATING DISK	2
60	A0060023	1 1/2 SAE WSHR	8
70	A7163T66	PIN, HI-STRENGTH	2
80	A0060021	1 SAE WSHR	16
90	0-3095002-0-11	PIN	2
100	Z765375-001	WASHER, INSULATING	4
110	A0068030	1/4 X 2 COTTER PIN USE F001547	16
120	A1856T04	INSULATING BUSHING	2
130	0-3019004-0-13	SPACER	6
140	L424870	RETAINING RING	4
150	0-3093401-0-01	ROUND BAR, HI-STRENGTH	2
160	A6030Y02	BUSHING	2
170	Z767929-002	WASHER, INSULATED	2
180	Y691328-173	PIN	2
190	Z765379-001	INSULATING BUSHING	2
200	0-3095002-0-13	PIN	2

CONFIDENTIAL
© COPYRIGHT 2011 HARSCO. THIS DRAWING OR DOCUMENT IS THE PROPERTY OF HARSCO AND EMBODIES CONFIDENTIAL INFORMATION, TRADE SECRET INFORMATION, AND/OR KNOW-HOW THAT IS THE PROPERTY OF HARSCO. BY ACCEPTING THIS DRAWING OR DOCUMENT, THE RECIPIENT AGREES (1) NOT TO PROVIDE, OR OTHERWISE MAKE AVAILABLE, THE DRAWING OR DOCUMENT, OR ANY INFORMATION OR KNOW-HOW EMBODIED THEREIN, TO ANY THIRD PARTY AND (2) NOT TO REPRODUCE OR USE THE DRAWING OR DOCUMENT TO MANUFACTURE ANY APPARATUS OR DEVICE, WITHOUT THE PRIOR WRITTEN AUTHORIZATION OF HARSCO.

NOMINAL SIZE RANGE		FRACT PLUS OR MINUS		DECIMAL		DECIMAL PLUS OR MINUS	
OVER	TO	2 PLACE DECIMAL	3 PLACE DECIMAL	OVER	TO	2 PLACE DECIMAL	3 PLACE DECIMAL
0	6	.03	.005	0	180	.8	.13
6	24	.04	.008	180	600	1.0	.20
24	-	.06	.010	600	-	1.5	.25

UNLESS OTHERWISE SPECIFIED ALL MACHINED SURFACES WILL MEET:
A SURFACE FINISH OF 125 MICROINCHES
ANGULAR TOLERANCE OF ± .25°
COACSENTRICITY WITHIN .010

THIRD ANGLE PROJECTION

UNLESS OTHERWISE SPECIFIED, ALL WELDS SHOULD ADHERE TO THE MOST CURRENT A.W.S. WELDING STANDARDS

CHANGE	R/L	REVISION	DR	DATE
ECN-105989	T	SE DRAFT VERSION CREATED	SRK	08-02-10
EC501078	U	DETAIL E WAS DETAIL F	SRK	05-05-11
EC502116	V	ITEM 40 QTY WAS 2	HW	10-02-11

Description: COMBO CLAMP INSTALLATION

HARSCO RAIL

Material: —; —

Machine Type: MARK IV

Size: E

Weight: 0.0 lbm

Drawn: skumar

Date Drawn: 10/4/2011

Part Number: A7609WAJ

Sheet: 1 of 2

SOLID EDGE DRAWING

DO NOT SCALE

Inch
[mm]

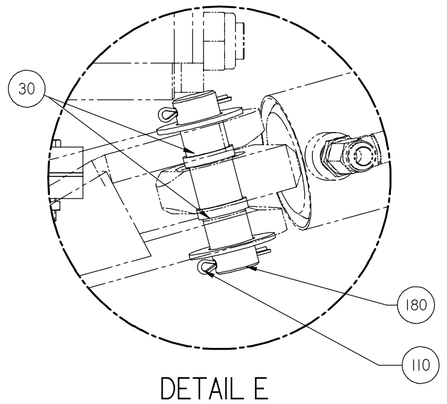

DETAIL E

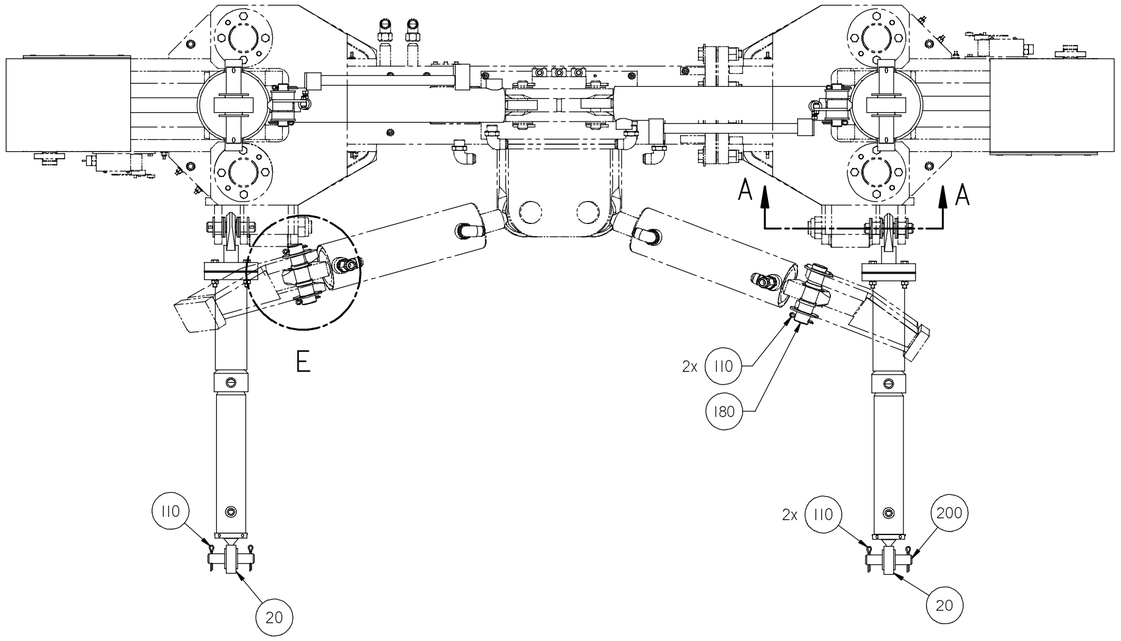

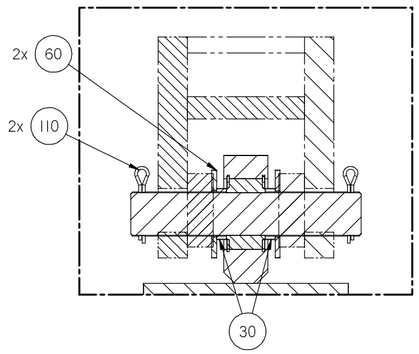

SECTION D-D

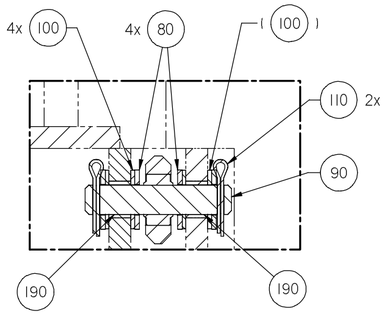

SECTION A-A

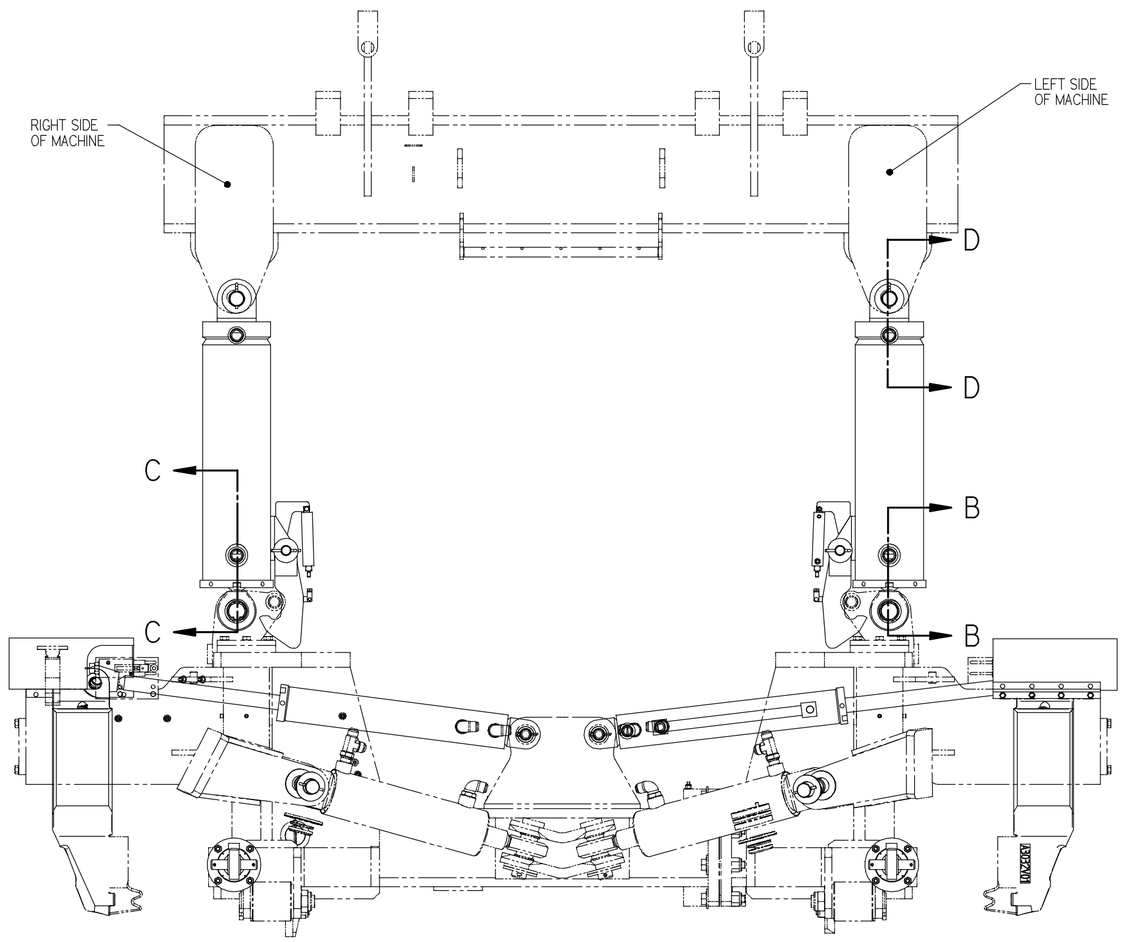

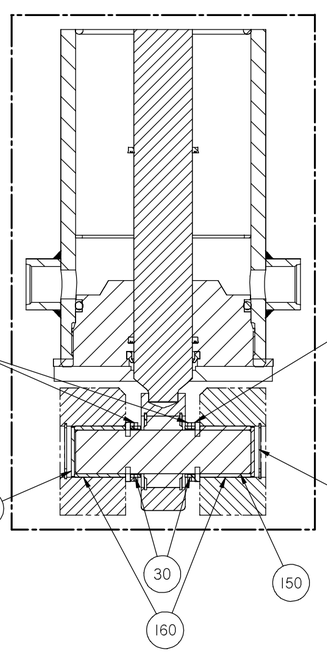

SECTION C-C

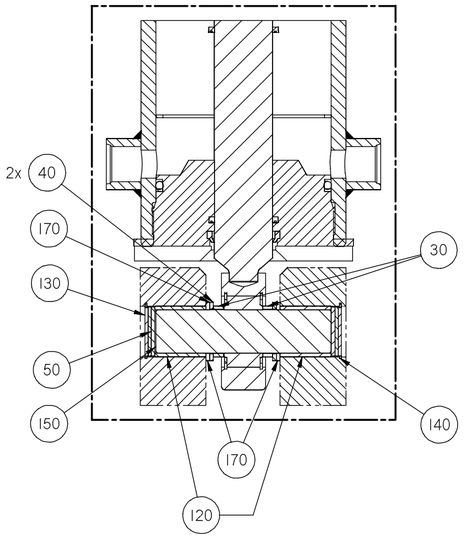

SECTION B-B

Inch
[mm]

CONFIDENTIAL
© COPYRIGHT 2011 HARSCO. THIS DRAWING OR DOCUMENT IS THE PROPERTY OF HARSCO AND EMBODIES CONFIDENTIAL INFORMATION, TRADE SECRET INFORMATION, AND/OR KNOW-HOW THAT IS THE PROPERTY OF HARSCO. BY ACCEPTING THIS DRAWING OR DOCUMENT, THE RECIPIENT AGREES (1) NOT TO PROVIDE, OR OTHERWISE MAKE AVAILABLE, THE DRAWING OR DOCUMENT, OR ANY INFORMATION OR KNOW-HOW EMBODIED THEREIN, TO ANY THIRD PARTY AND (2) NOT TO REPRODUCE OR USE THE DRAWING OR DOCUMENT TO MANUFACTURE ANY APPARATUS OR DEVICE, WITHOUT THE PRIOR WRITTEN AUTHORIZATION OF HARSCO.

LENGTH DIMENSIONS OVER	TO	INCH PLUS OR MINUS 1 PLACE DECIMAL	2 PLACE DECIMAL	LENGTH DIMENSIONS OVER	TO	METRIC PLUS OR MINUS 1 PLACE DECIMAL	2 PLACE DECIMAL
0	6	.03	.005	0	150	.8	.13
6	24	.04	.005	150	600	1.0	.20
24	-	.06	.010	600	-	1.5	.25

UNLESS OTHERWISE SPECIFIED ALL MACHINED SURFACE WILL HAVE A SURFACE FINISH OF 125 MICROINCHES ANGULAR TOLERANCE OF ± .5° CONCENTRICITY WITHIN .010

THIRD ANGLE PROJECTION

UNLESS OTHERWISE SPECIFIED, ALL WELDS SHOULD ADHERE TO THE MOST CURRENT AJW.S WELDING STANDARDS

CHANGE	R/L	REVISION	DR	DATE
ECN-105989	T	SE DRAFT VERSION CREATED	SRK	08-02-10
EC501078	U	DETAIL E WAS DETAIL F	SRK	05-05-11
EC502116	V	ITEM 40 QTY WAS 2	HW	10-02-11

Description: COMBO CLAMP INSTALLATION

HARSCO RAIL

Material: —; —

Machine Type: MARK IV

Size: E

Weight: 0.0 lbm

Drawn: skumar

Date Drawn: 10/4/2011

Part Number: A7609WAJ

Sheet: 2 of 2

SOLID EDGE DRAWING

DO NOT SCALE

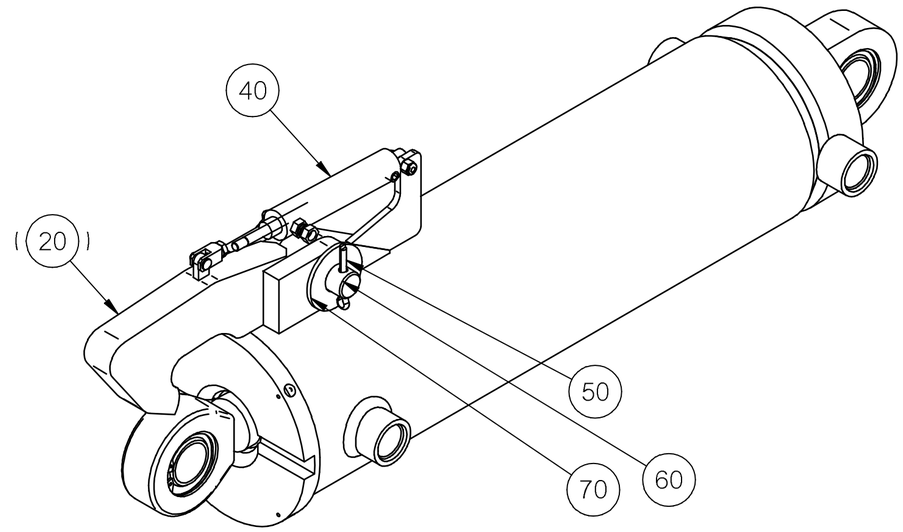

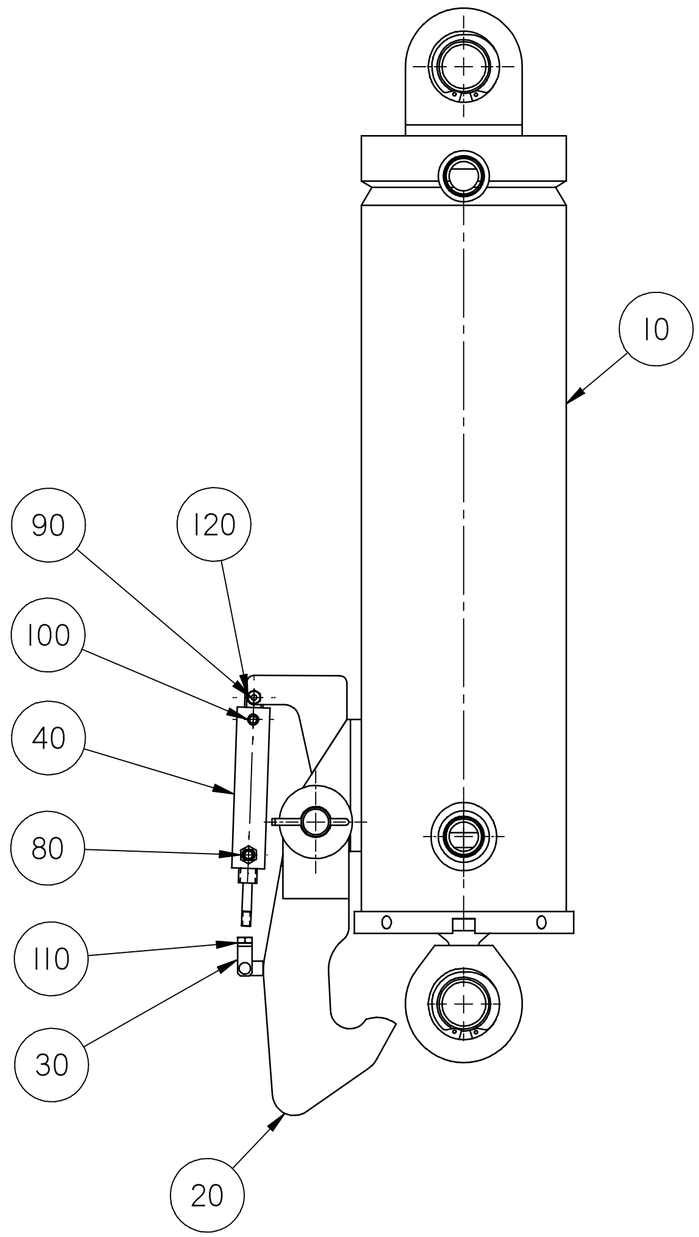

ITEM	PART NO	QTY	DESCRIPTION
10	B5715XAD	1	6 X 2 X 20 CYLINDER ASSEMBLY
20	D5869YAA	1	HOOK WELDMENT
30	0-3014001-0-12	1	CLEVIS W/PIN
40	A4771Y04	1	AIR CYL SINGLE ACTING
50	A0068030	2	1/4 X 2 COTTER PIN USE F001547
60	Y691328-099	1	PIN
70	F013412	2	DC-WROUGHT WASHER 1" ZP
80	L423690	1	RESTRICTOR
90	F009825	1	DC-HEX HC SCR 1/4-20X1 GR5
100	0-3304118-0-12	1	EXTERNAL PIPE PLUG USE F008544
110	F008905	1	HEX JAM NUT 5/16-24 GR2 ZP *
120	F013588	1	DC-1/4-20 ELAS STP NUT

Inch
[mm]

SOLID EDGE DRAWING

CONFIDENTIAL

© COPYRIGHT 2009 HARSCO. THIS DRAWING OR DOCUMENT IS THE PROPERTY OF HARSCO AND EMBODIES CONFIDENTIAL INFORMATION, TRADE SECRET INFORMATION, AND/OR KNOW-HOW THAT IS THE PROPERTY OF HARSCO. BY ACCEPTING THIS DRAWING OR DOCUMENT, THE RECIPIENT AGREES (1) NOT TO PROVIDE, OR OTHERWISE MAKE AVAILABLE, THE DRAWING OR DOCUMENT, OR ANY INFORMATION OR KNOW-HOW EMBODIED THEREIN, TO ANY THIRD PARTY AND (2) NOT TO REPRODUCE OR USE THE DRAWING OR DOCUMENT TO MANUFACTURE ANY APPARATUS OR DEVICE, WITHOUT THE PRIOR WRITTEN AUTHORIZATION OF HARSCO.

IMPLIED TOLERANCES

ALL DIMENSIONS ARE IN INCHES - TOLERANCE UNLESS OTHERWISE SPECIFIED

NOMINAL SIZE RANGE		INCH PLUS OR MINUS		NOMINAL SIZE RANGE		METRIC PLUS OR MINUS	
OVER	TO	2 PLACE DECIMAL	3 PLACE DECIMAL	OVER	TO	1 PLACE DECIMAL	2 PLACE DECIMAL
0	6	.03	.005	0	150	.8	.13
6	24	.04	.008	150	600	1.0	.20
24	-	.06	.010	600	-	1.5	.25

UNLESS OTHERWISE SPECIFIED ALL MACHINED SURFACES WILL HAVE;
A SURFACE FINISH OF 125 MICROINCHES
ANGULAR TOLERANCE OF ± .50°
CONCENTRICITY WITHIN .010

THIRD ANGLE PROJECTION

UNLESS OTHERWISE SPECIFIED, ALL WELDS SHOULD ADHERE TO THE MOST CURRENT A.W.S WELDING STANDARDS

CHANGE	R/L	REVISION	DATE
ECN-105721	B	SE DRAFT VERSION CREATED	05-28-10

Description: 6 X 2 X 20 CYLINDER ASSEMBLY

Drawing Number: ----------

Machine Type: MARK IV

Model: B5715XAE.asm

Drawn: skumar

Date Drawn: 28 May 10

Weight: 0.0 lbm

Scale: 1:4

APVD Desg: BPA

APVD ChEng: HW

Mat'l: ---- ----

HARSCO RAIL

Part Number: B5715XAE

Size: C

Sheet: 1 of 1

Plotted by skumar on 4/7/2011 B5715XAE.dft

NOTES:

1. TIGHTEN ITEM-20 "PISTON" TO 100-150 FT-LBS
2. CYLINDER ASSEMBLY SHALL NOT LEAK AT ANY WELDED JOINT WHILE MAINTAINING 3000 PSI. AT BOTH PORTS FOR FIVE MINUTES.
3. INSTALL LOCKWIRE L424026 17 GA. (.054 DIA)
4. TAP DRILL 1 1/4" DEEP & 5/16-18 UNC-3B X 1" DEEP (AT ASSY).
5. THESE COMPONENTS INCLUDED IN ITEM 80 SEAL KIT.

PRESSURE RATING:

OPERATING_____
2550 PSI (175 BAR)
BURST (MIN)_____
10220 PSI (700 BAR)

ITEM	PART NO	QTY	DESCRIPTION
10	B5693XAF	1	CYLINDER BODY
20	B5461X01	1	PISTON- 6" X 2"
30	B5500X01	1	ROD BUSHING
40	B5677XBM	1	ROD & LUG ASSEMBLY
50	L424439	2	BUSHING USE F016962
60	L40001	4	RING RETAINING USE F013601
70	A0062022	1	5/16-18X3/4 SHSSCR CUP
80	B5432YAA	1	SEAL KIT ASSEMBLY - 6"

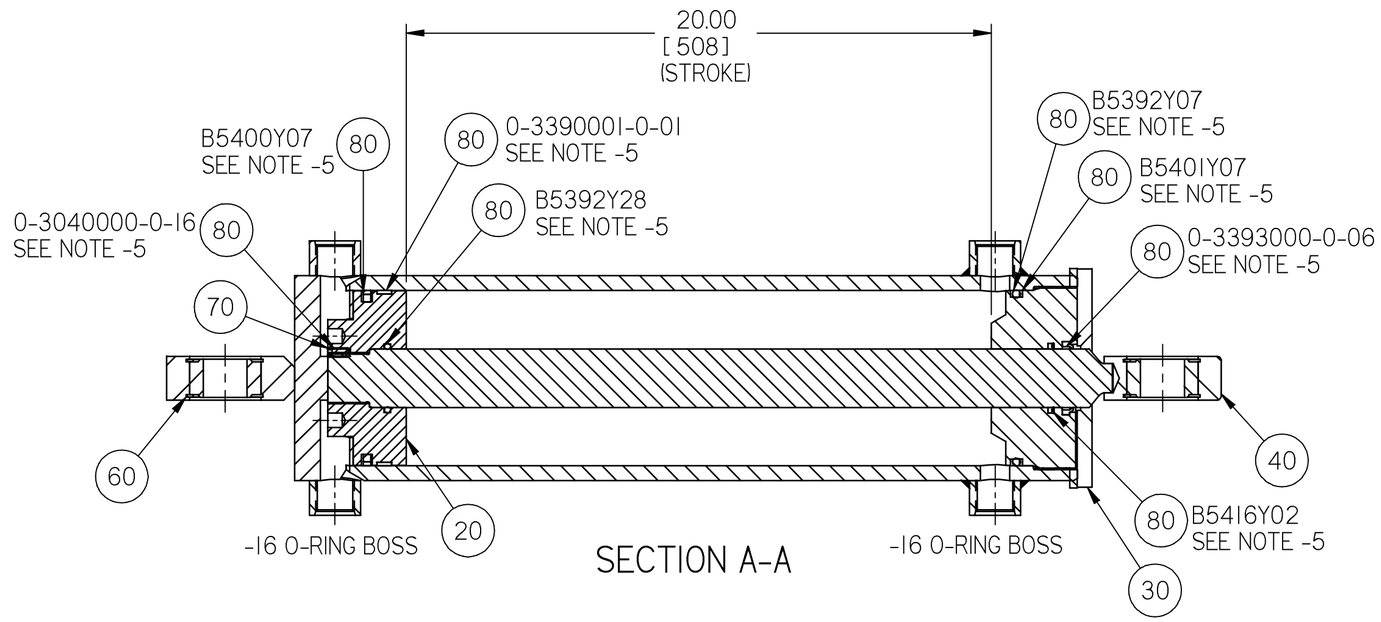

SECTION A-A

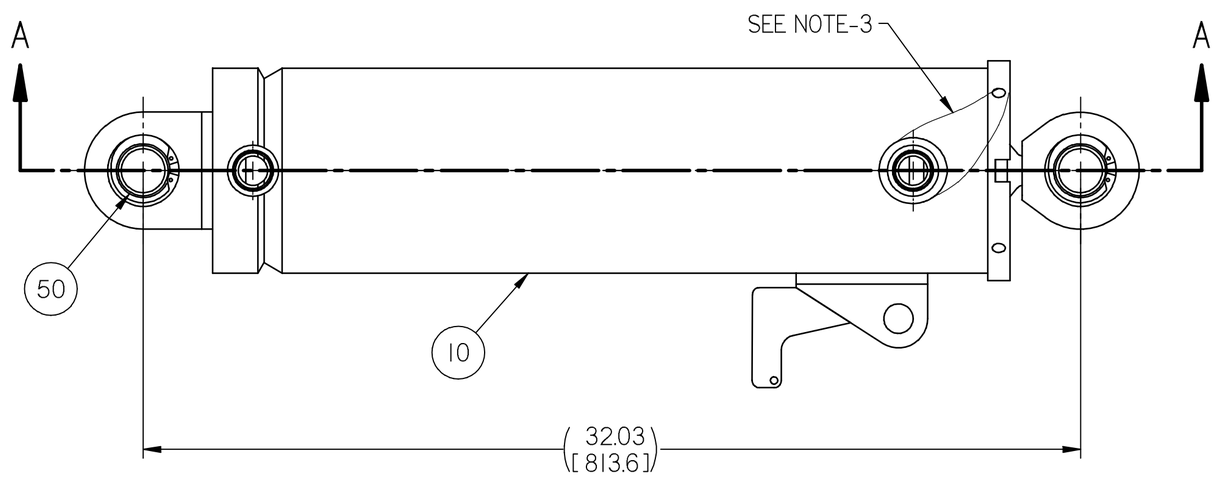

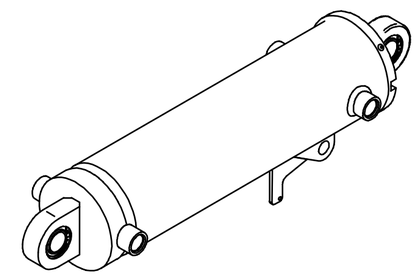

Inch
[mm]

SOLID EDGE DRAWING

CONFIDENTIAL

© COPYRIGHT 2009 HARSCO. THIS DRAWING OR DOCUMENT IS THE PROPERTY OF HARSCO AND EMBODIES CONFIDENTIAL INFORMATION, TRADE SECRET INFORMATION, AND/OR KNOW-HOW THAT IS THE PROPERTY OF HARSCO. BY ACCEPTING THIS DRAWING OR DOCUMENT, THE RECIPIENT AGREES (1) NOT TO PROVIDE, OR OTHERWISE MAKE AVAILABLE, THE DRAWING OR DOCUMENT, OR ANY INFORMATION OR KNOW-HOW EMBODIED THEREIN, TO ANY THIRD PARTY AND (2) NOT TO REPRODUCE OR USE THE DRAWING OR DOCUMENT TO MANUFACTURE ANY APPARATUS OR DEVICE, WITHOUT THE PRIOR WRITTEN AUTHORIZATION OF HARSCO.

IMPLIED TOLERANCES
ALL DIMENSIONS ARE IN INCHES - TOLERANCE UNLESS OTHERWISE SPECIFIED

NOMINAL SIZE RANGE		INCH PLUS OR MINUS		NOMINAL SIZE RANGE		METRIC PLUS OR MINUS	
OVER	TO	2 PLACE DECIMAL	3 PLACE DECIMAL	OVER	TO	1 PLACE DECIMAL	2 PLACE DECIMAL
0	6	.03	.005	0	150	.8	.13
6	24	.04	.008	150	600	1.0	.20
24	-	.06	.010	600	-	1.5	.25

UNLESS OTHERWISE SPECIFIED ALL MACHINED SURFACES WILL HAVE;
A SURFACE FINISH OF 125 MICROINCHES
ANGULAR TOLERANCE OF ± .50°
CONCENTRICITY WITHIN .010

THIRD ANGLE PROJECTION

UNLESS OTHERWISE SPECIFIED, ALL WELDS SHOULD ADHERE TO THE MOST CURRENT A.W.S WELDING STANDARDS

CHANGE	R/L	REVISION	DATE
ECN-10572I	B	SE DRAFT VERSION CREATED	05-25-10

Description: 6 X 2 X 20 CYLINDER ASSEMBLY
Drawing Number: ----------
Machine Type: MARK IV
Model: B5715XAD.asm
Drawn: skumar
Date Drawn: 25 May 10
Weight: ----
Scale: 1:4
APVD Desg: BPA
APVD ChEng: HW
Mat'l: - ----

HARSCO RAIL

Part Number: B5715XAD
Size: C
Sheet: 1 of 1

Plotted by skumar on 4/7/2011 B5715XAD.dft

NOTES:

1. ASSEMBLE ITEMS-4, 8, 12, 14 & 11 (FLUSH), THEN DRILL A Ø 1/4 IN-LINE HOLE THRU ITEMS-8 & 11 AND INSTALL ITEM- 5.
2. TIGHTEN ITEM- 3 (PISTON) TO 50-100 LB-FT TORQUE.
3. CYLINDER ASSEMBLY SHALL NOT LEAK AT ANY WELD JOINT WHILE MAINTAINING 3000 PSI
4. APPLY THREAD RETAINING COMPOUND, LOCTITE NO 242, P/N 0-3040000-0-06 (REF) TO ITEM-16
5. INSTALL 17 GAGE (Ø.0541) LOCKWIRE, P/N L424026, TO SECURE ROD CAP
6. DRILL & TAP 5/16- 8 UNC-3B AT ASSEMBLY FOR ITEM- 6.
7. STAKE ITEM- 3 IN PLACE BOTH ENDS AND BOTH SIDES (4 PLACES)
8. ITEM- 4 SPRING INFO: 06 INITIAL PRELOAD = 68 LBS EACH, RATE = .090 LBS PER INCH EACH, FREE LENGTH = 4.5, SOLID HEIGHT = 3.2, TRAVEL TO SOLID = .38
9. THESE COMPONENTS INCLUDED IN ITEM- 7 SEAL KIT

2 1/2 BORE X 1 1/2 ROD X 1 1/2 ROD X 34 CLOSED X 10 STROKE X 1131 SPRING LOAD

ITEM	PART NO	DESCRIPTION	QTY
1	A9336XAC	SLEW CYLINDER BODY	1
2	B5496X01	ROD BUSHING - 2 1/2"	1
3	0- 304837-0-02	END CAP RETAINER	1
4	0- 304838-0-0	END CAP	1
5	A0036070	3/8- 6 2 1/2 HHCS	4
6	F001025	LOCK WASHER 3/8	4
7	A0055012	3/8- 6 HEX NUT	4
8	0-2202634-0-0	ROD ASSY	1
9	B5677XBL	ROD & LUG ASSY	1
0	B5457X04	PISTON 2 1/2" X 1 1/2"	1
11	0- 408420-0-0	BUFFER STOP	1
12	0-3652004-0-3	OIL IMPREGNATED BEARING	1
13	F040356	SWIVEL BEARING	2
14	0-3641000-0- 9	SPRING	2
15	L409 5	PIN 1/4 X 2 1/4 ROLL PIN	1
16	A0062022	5/ 16- 8 UNC SOC HD SET SCR	1
17	B5428YAA	SEAL KIT - 2 1/2" CYL	1

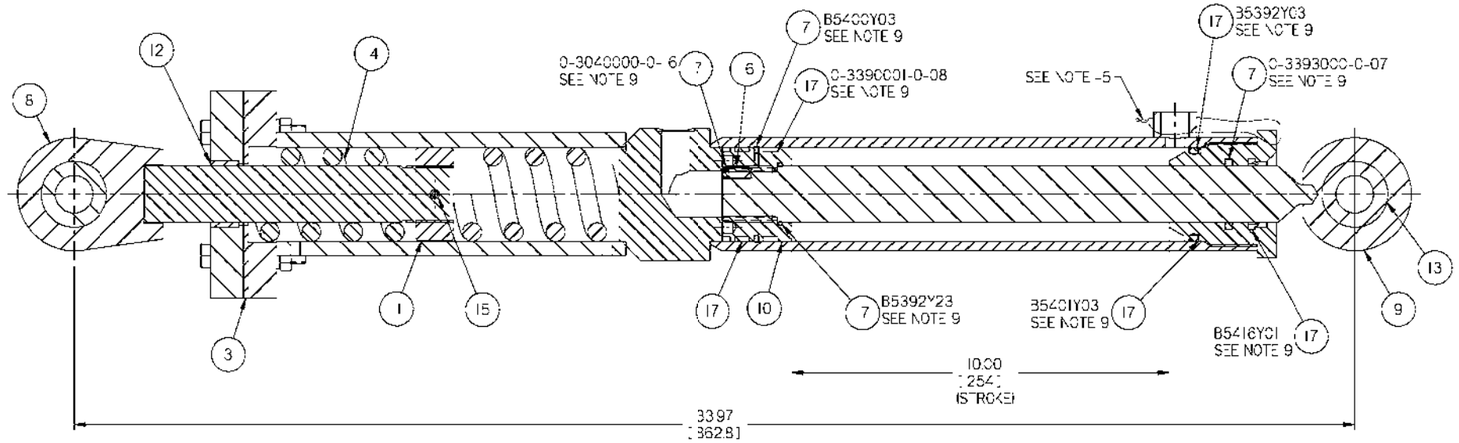

SECTION B-B

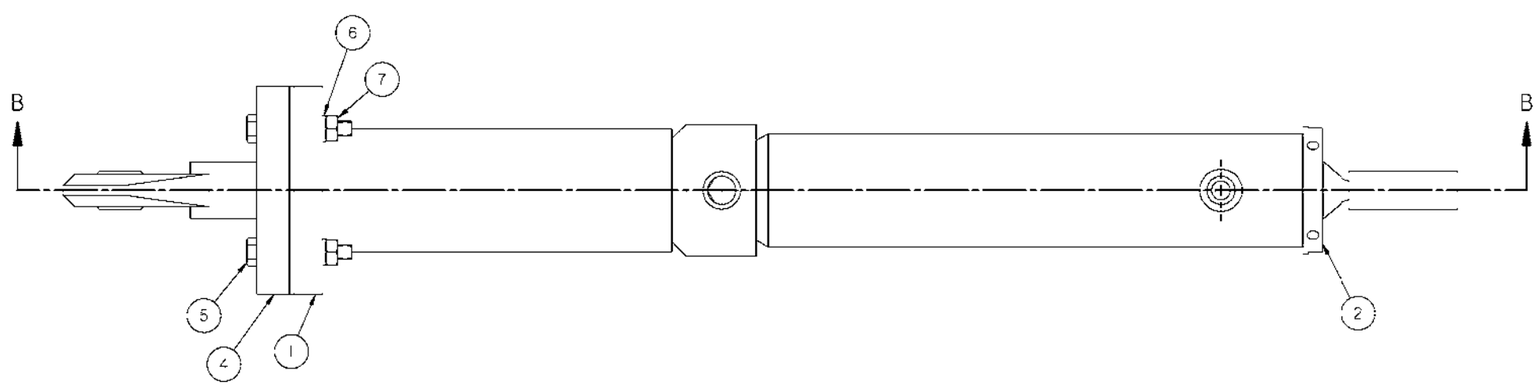

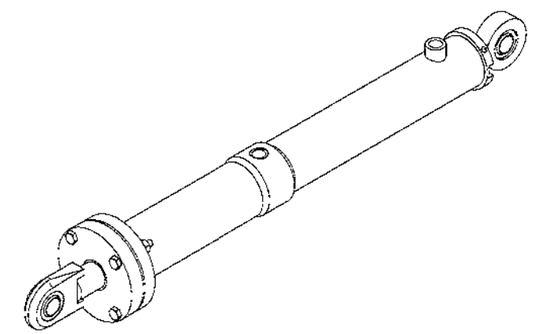

Inch
[mm]

CONFIDENTIAL
© COPYRIGHT 2009 HARSCO. THIS DRAWING OR DOCUMENT IS THE PROPERTY OF HARSCO AND EMBODIES CONFIDENTIAL INFORMATION TRADE SECRET INFORMATION AND/OR KNOWHOW THAT IS THE PROPERTY OF HARSCO. BY ACCEPTING THIS DRAWING OR DOCUMENT THE RECIPIENT AGREES (1) NOT TO PROVIDE OR OTHERWISE MAKE AVAILABLE THE DRAWING OR DOCUMENT, OR ANY INFORMATION OR KNOWHOW EMBODIED THEREIN, TO ANY THIRD PARTY AND (2) NOT TO REPRODUCE OR USE THE DRAWING OR DOCUMENT TO MANUFACTURE ANY APPARATUS OR DEVICE, WITHOUT THE PRIOR WRITTEN AUTHORIZATION OF HARSCO

SOLID EDGE DRAWING

UNLESS OTHERWISE NOTED TOLERANCES ON FRACTIONS SHOULD BE SPECIFIED

CHANGE	R/L	REVISION	DATE
ECN 08589	2	RE DRAFT VERSION CREATED	07-20-10
		ITEM NOS SEQUENCE HAVE BEEN MODIFIED	

Drawing Title: SLEW CYL ASSY
Drawing Number: ----------
Machine Type: MARK IV
Model: B7036WAC.asm
Drawn: dturner 20 Jul 10
Weight: ----
Scale: 1:2
Drawn: BPA
Checked: HW
Material: ... ...

HARSCO RAIL

Part Number: B7036WAC
Size: D
Sheet: 1 of 1

Plotted by dturner on 8/4/20 0 B7036WAC.dwg

Item Number	Document Number	Title	Quantity
10	G3257WAA	MAIN BEAM WELDMENT	1
20	0-1203075-0-01	PLATE, INSULATION	1
30	A1856T05	INSULATING BUSHING	12
40	G3369WAA	EXTENSION BEAM WELDMENT	1
50	D6410WAA	CARRIER BOX MACHINING	2
60	0-1305744-0-01	GUIDE PLATE	4
70	0-2203041-0-01	GUIDE ROD	4
80	F001753	WROUGHT WASHER .75	12
90	Z683490	WASHER	12
100	A0036226	3/4-10 X 4 CAPSCREW	12
110	L40108	3/4-10 NUT ELASTIC	12
120	A0061063	1/2 HVY LOK WSHR	24
130	A6229X01	RETAINER	2
140	F001539	DC-HEX HD CAP SCR 1/2-13X1 1/4	24
150	A0059012	1 1/2 REG PL WSHR	14
160	0-2305761-0-01	ASSEMBLY, ROLLER	2
170	D6987X02	ROLLER PIN	2
180	0-3011001-0-78	LOCKNUT	2
190	0-3092105-0-14	STEEL PLATE 3/8 THICK	4
200	0-2305775-0-01	PIN, PIVOT	1
210	A0043032	1/4-20X5/8 SOCHDSCRNLOK	4
220	0-1306039-0-01	PLATE WELD	4
230	A6233X01	GUIDE ROD	2
240	A2586Y01	BIAS PAD SHIM	4
250	0-1305738-1-01	PAD REACTION	1
260	A0061019	1 LOK WSHR	6
270	A0036257	1-8 X 3 HHCS	6
280	G6231XAA	HOOK COVER WELDMENT	2
290	A5553W01	ROLLER, MOUNT	2
300	A0060021	1 SAE WSHR	24
310	A1681YAA	ASSY ROLLER	2
320	D6987X01	ROLLER PIN	2
330	L40931	ESNA NUT 3/4-10	2
340	A7660YAA	PAD ASSEMBLY, BIASING	1
350	0-3019004-0-08	SPACER	2
360	A0068032	1/4 X 2 1/2 COTTER PIN USE 700743250	2
370	B5705XAB	CYLINDER, HYD, 4"	1
380	0-1305774-0-01	PIN, PIVOT	1
390	F001547	DC-1/4 X 2 COTTER PIN	4
400	0-3015002-0-26	CLEVIS PIN	2
410	B5705XAF	CYLINDER, HYDRAULIC - 4"	2
420	A6030Y05	SPACER	8
430	D7190T06	WASHER/SPACER	4
440	F014860	DC-TEE 12X12SAE X 12	2
450	414260	CONNECTOR M12 "T"	3
460	A2634Y01	TAPPED PLATE	6
470	H5963YAA	LIMIT SWITCH ASSY	6
480	L422909	LONG ADJ OPERATING LEVER	6
490	F025837	LOCK WASHER	12
500	A0050091	10-32X2 1/4 RD HD MS CP	12
510	F016887	ELB 90°12x12SAE	6
520	A3033X02	HOOK, INSERT MACHINING	2
530	A0041184	1-8X3 1/4 SOC HD CAPSCR	4
540	B5708XAA	3" BORE, 1 1/2" ROD CYLINDER ASSEMBLY	2
550	A6733Y02	SWITCH BRACKET	2
560	G6961Y01	BOLT 1 1/4 X 4 1/2 FULL TH	4
570	F014796	HALF NUT 1 1/4 -12	4
580	0-3095002-0-11	PIN	2
590	A0059028	1/4 MED CAD PL PLAIN WA	4
600	A0036003	1/4-20 X 3/4 HHCS	4
610	A4823Y01	HOOK EXT CYL PIN	2
620	0-3013001-0-05	RET RING	4
630	A6030Y04	BUSHING	2
640	Z765375-001	WASHER, INSULATING	2
650	F002733	DC-1/4 X 1 1/2 COTTER PIN	4
660	F001106	DC-WROUGHT WASHER 1/4 Z.P. *	16
670	L40237	ELASTIC STOPNUT #29-NU040 USE	10
680	A1856T03	BUSHING	2
690	A1072Y01	WASHER, PLASTIC	2
700	0-3019004-0-12	WASHER	2
710	0-3393001-0-06	WIPER SEAL	4
720	0-3652060-0-01	BUSHING	4
730	0-1305728-0-01	BEARING GUIDE	8
740	0-3393001-0-05	WIPER-SEAL	8

Item Number	Document Number	Title	Quantity
750	0-3010025-0-04	DRAW LATCH	2
760	F008544	DC-PLG 2NP SKT *	8
770	G6241Y01	PLATE, BOLT HEAD LOCKING	4
780	A0036302	3/8-16X1 H/H CS NYLOCK	8
790	A0061005	#8 LOK WSHR	6
800	A0050043	8-32X1 1/2 RDHD MSCR CP	6
810	F005273	DC-HXMS NT8(.164)-32 GR2 TEXT	6
820	F023112	DC-STR 12X12SAE L	2
830	F013990	DC-ELB90 12X12FS	2
840	F009420	ZERK ELB45 X 2NPT	2
850	L424667	PRESSURE RELIEF	2
860	L40346	CLAMP HOSE	20
870	A0061008	1/4 MED LOK WSHR	4
880	F003085	DC - HHCS .250-20 X .50	6
890	F041474	DC-WELD STUD	6
900	3401325	CABLE ASSEMBLY, M12, M/F, 2 ME	2
910	3401324	CABLE ASSEMBLY, M12, M/F, 1 ME	4
920	A3031V02	HOOK, MACHINING	2
930	0-3095002-0-09	PIN	1
940	F004252	DC-ZERK STR X 02NPT	4
950	F040392	ADAPTER	2

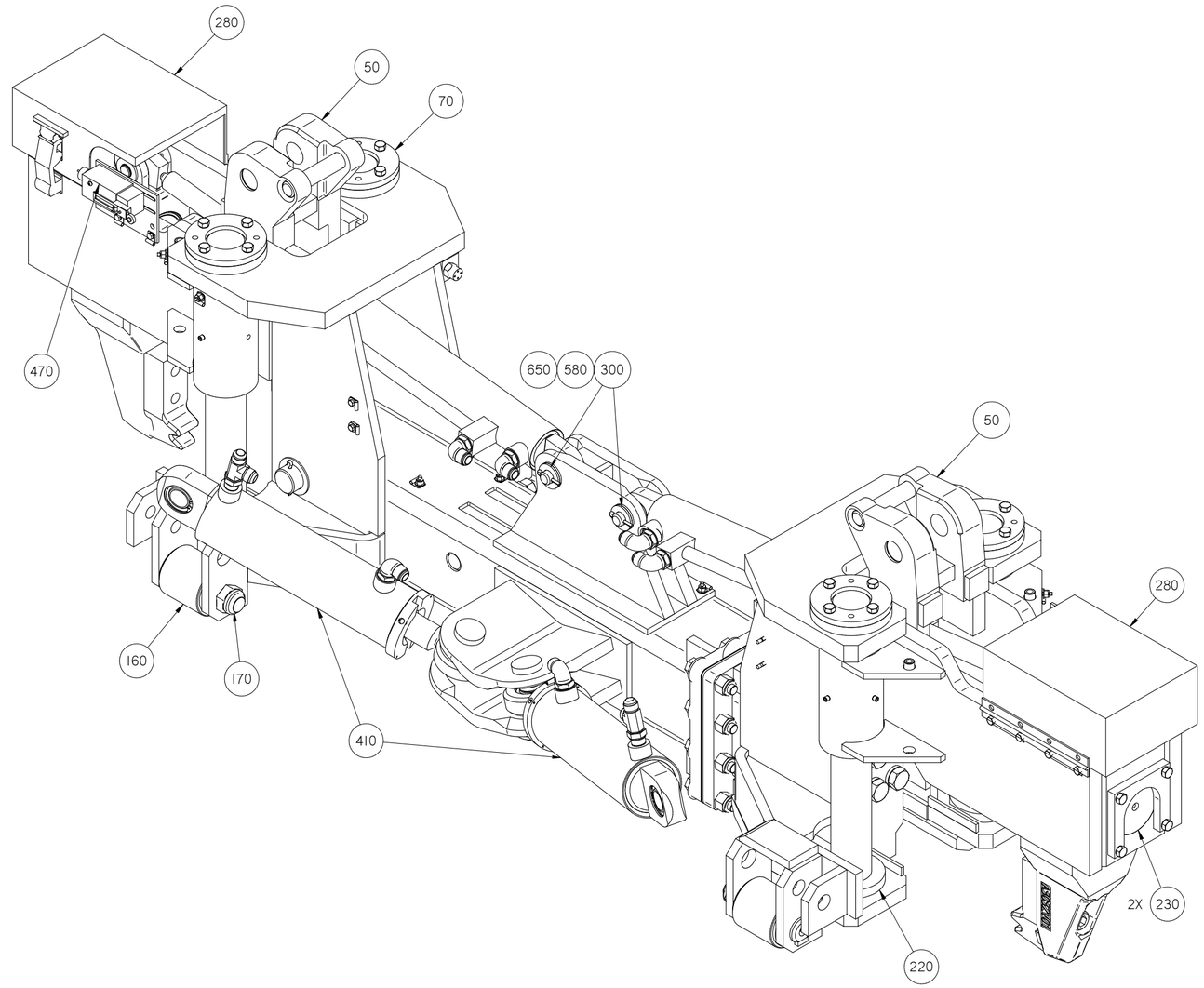

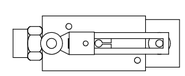

EXTEND ARMS ALL THE WAY OUT & MOUNT ARM SO THAT IT RUNS DOWN THE LENGTH OF THE SWITCH.

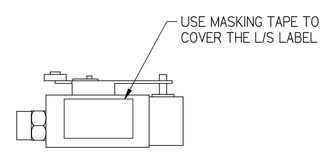

ON THE EXTEND L/S ROTATE HEADS SO THAT THE ARMS ARE ON TOP OF SWITCH WHEN MOUNTED.

NOTES:

1. USE CABLE TIE SLEEVES TO LABEL BOTH ENDS OF EACH CABLE WITH CABLE NUMBER.
2. SEE ELECTRICAL DRAWING FOR ASSEMBLING THE CABLE ASSEMBLIES: ITEM 94 AND ITEM 95.

CONFIDENTIAL

© COPYRIGHT 2009 HARSCO. THIS DRAWING OR DOCUMENT IS THE PROPERTY OF HARSCO AND EMBODIES CONFIDENTIAL INFORMATION, TRADE SECRET INFORMATION, AND/OR KNOW-HOW THAT IS THE PROPERTY OF HARSCO. BY ACCEPTING THIS DRAWING OR DOCUMENT, THE RECIPIENT AGREES (1) NOT TO PROVIDE, OR OTHERWISE MAKE AVAILABLE, THE DRAWING OR DOCUMENT, OR ANY INFORMATION OR KNOW-HOW EMBODIED THEREIN, TO ANY THIRD PARTY AND (2) NOT TO REPRODUCE OR USE THE DRAWING OR DOCUMENT TO MANUFACTURE ANY APPARATUS OR DEVICE, WITHOUT THE PRIOR WRITTEN AUTHORIZATION OF HARSCO.

SOLID EDGE DRAWING

IMPLIED TOLERANCES

ALL DIMENSIONS ARE IN INCHES - TOLERANCE UNLESS OTHERWISE SPECIFIED

Nominal Size Range	INCH PLUS OR MINUS		Nominal Size Range	METRIC PLUS OR MINUS	
OVER	TO	2 PLACE DECIMAL	3 PLACE DECIMAL	OVER	TO	2 PLACE DECIMAL	3 PLACE DECIMAL
0	6	.03	.005	0	150	.8	1.3
6	24	.04	.008	150	600	1.0	.20
24	-	.06	.010	600	-	1.5	.25

UNLESS OTHERWISE SPECIFIED, ALL MACHINED SURFACES WILL HAVE:
A SURFACE FINISH OF 125 MICRONCHES
ANGULAR TOLERANCE OF ± 30'
CONCENTRICITY WITHIN .010

THIRD ANGLE PROJECTION

UNLESS OTHERWISE SPECIFIED, ALL WELDS SHOULD BE MADE TO AWS STANDARDS A.W. 5 WELDING STANDARDS

CHANGE	R/L	REVISION	DR	DATE
ECN-105989	D	SE DRAFT VERSION CREATED ITEM NO.'s SEQUENCE HAS BEEN ALTERED	SH	07-27-10
EC502519	E	40237 QTY WAS 16, F001106 QTY WAS 22 & A0061008 QTY WAS 6; CHANGE NUMBERING SEQUENCE BECAUSE OF TEAMCENTER	HW	12-19-11
EC502767	F	ADDED DETAIL 'F' FOR WIRE ROUTING, DETAIL 'G' WAS 'F'	CJW	01-25-12

Inch [mm]

Description: COMBO CLAMP, 56 1/2

Drawing Number: ----------

Machine Type: MARK IV

Model: G8585VAD.asm

Drawn: skumar 27 Jul 10

Weight: 0.0 lbm

Scale: 1:4

APVD Eng: BPA APVD Mfg: HW

Part: ---- ----

HARSCO RAIL

Part Number: G8585VAD

Size: E

Sheet: 1 of 4

Plotted by mdongthen on 1/26/2012 G8585VAD.dft

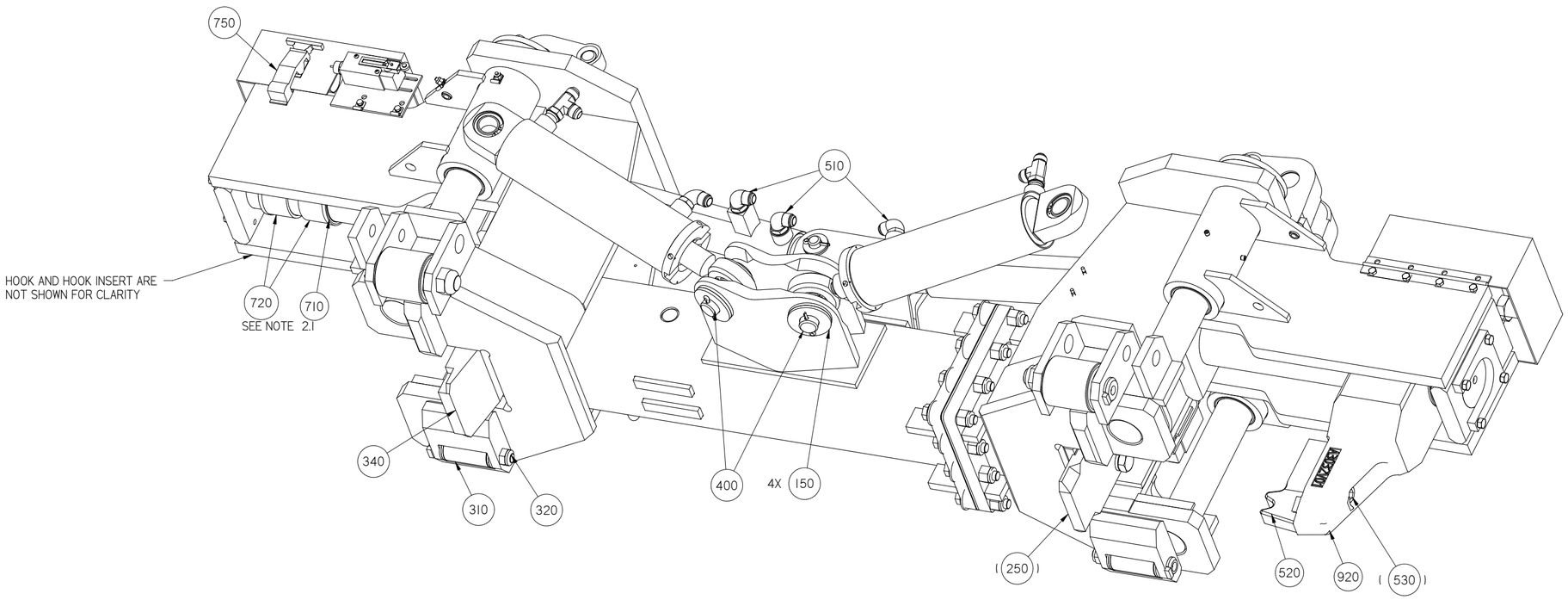

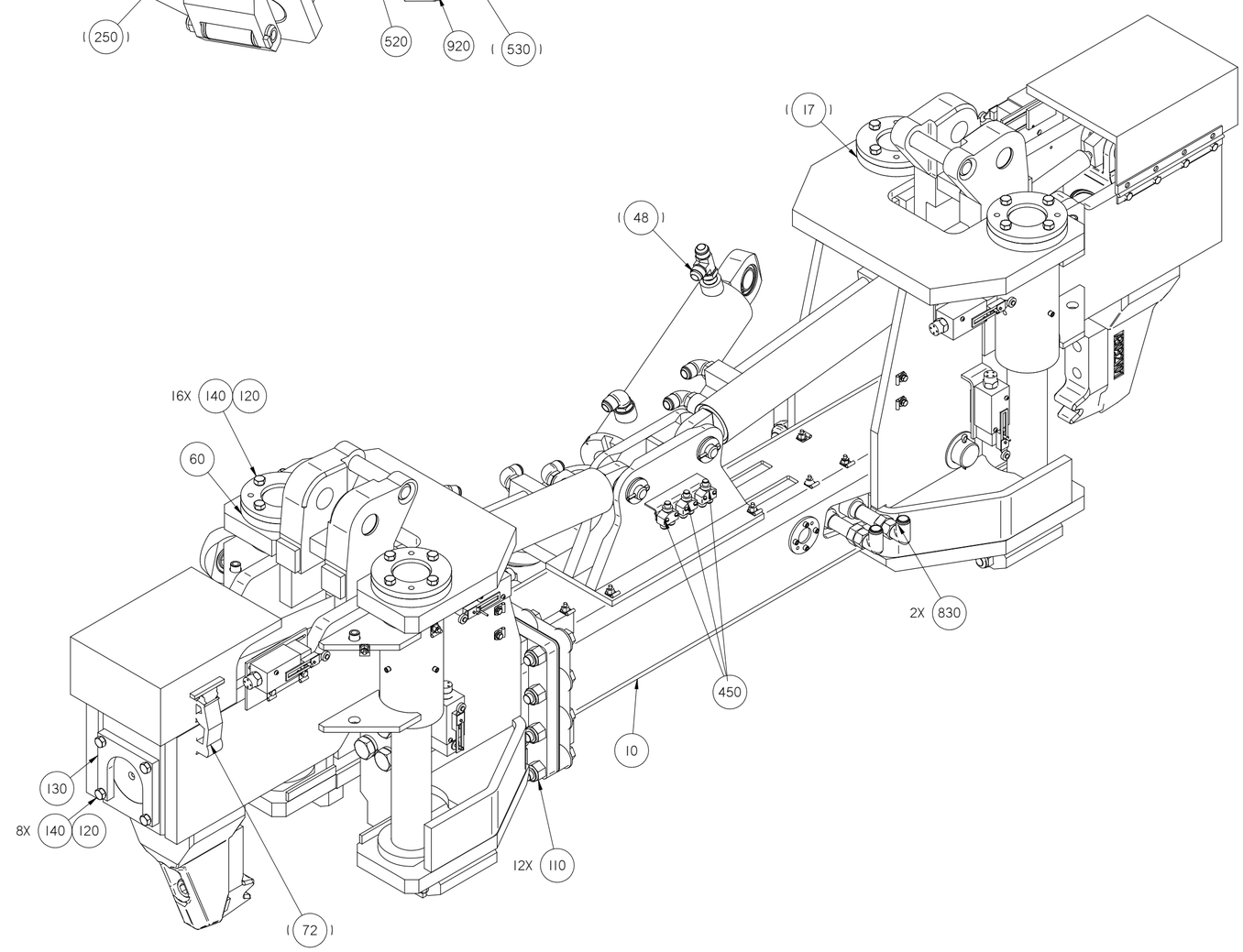

NOTES:

2.1. BUSHINGS, ITEM 76, MUST BE PLACED IN HOOKS, ITEM 57, WITH OPENINGS OF GREASE GROOVES TOWARDS CENTER OF HOOK. INSTAL BUSHINGS & WIPERS, ITEM 78, USING RETAINING COMPOUND 0-3040000-0-12. STAKE LIGHTLY TO RETAIN WIPER.

CONFIDENTIAL

© COPYRIGHT 2009 HARSCO. THIS DRAWING OR DOCUMENT IS THE PROPERTY OF HARSCO AND EMBODIES CONFIDENTIAL INFORMATION, TRADE SECRET INFORMATION, AND/OR KNOW-HOW THAT IS THE PROPERTY OF HARSCO. BY ACCEPTING THIS DRAWING OR DOCUMENT, THE RECIPIENT AGREES (1) NOT TO PROVIDE, OR OTHERWISE MAKE AVAILABLE, THE DRAWING OR DOCUMENT, OR ANY INFORMATION OR KNOW-HOW EMBODIED THEREIN, TO ANY THIRD PARTY AND (2) NOT TO REPRODUCE OR USE THE DRAWING OR DOCUMENT TO MANUFACTURE ANY APPARATUS OR DEVICE, WITHOUT THE PRIOR WRITTEN AUTHORIZATION OF HARSCO.

SOLID EDGE DRAWING

IMPLIED TOLERANCES

ALL DIMENSIONS ARE IN INCHES . TOLERANCE UNLESS OTHERWISE SPECIFIED

INCH				METRIC			
NOMINAL SIZE		PLUS OR MINUS		NOMINAL SIZE		PLUS OR MINUS	
OVER	TO	2 PLACE DECIMAL	3 PLACE DECIMAL	OVER	TO	1 PLACE DECIMAL	2 PLACE DECIMAL
0	6	.03	.005	0	150	.8	.13
6	24	.04	.008	150	600	1.0	.20
24		.06	.010	600		1.5	.25

UNLESS OTHERWISE SPECIFIED ALL MACHINED SURFACES WILL HAVE:
A SURFACE FINISH OF 125 MICROINCHES
ANGULAR TOLERANCE OF ± 30'
CONCENTRICITY WITHIN .010

THIRD ANGLE PROJECTION

UNLESS OTHERWISE SPECIFIED, ALL WELDS SHOULD ADHERE TO THE MOST CURRENT A.W.S WELDING STANDARDS

CHANGE	R/L	REVISION	DR	DATE
ECN-105989	D	SE DRAFT VERSION CREATED ITEM NO.'s SEQUENCE HAS BEEN ALTERED	SH	07-27-10
EC502519	E	L40237 QTY WAS 16, F001106 QTY WAS 22 & A0061008 QTY WAS 6, CHANGE NUMBERING SEQUENCE BECAUSE OF TEAMCENTER	HW	12-19-11
EC502767	F	ADDED DETAIL 'F' FOR WIRE ROUTING, DETAIL 'G' WAS 'F'	CJW	01-25-12

Description: COMBO CLAMP, 56 1/2

Drawing Number: ----------

Machine Type: MARK IV

Model: G8585VAD.asm

Drawn: skumar

Date Drawn: 27 Jul 10

Weight: 0.0 lbm

Scale: 1:4

APVD Eng: BPA

APVD Mkg: HW

Part Number: G85585VAD

Size: E

Sheet: 2 of 4

Inch [mm]

HARSCO RAIL

Plotted by mdonathen on 1/26/2012 G85585VAD.dft

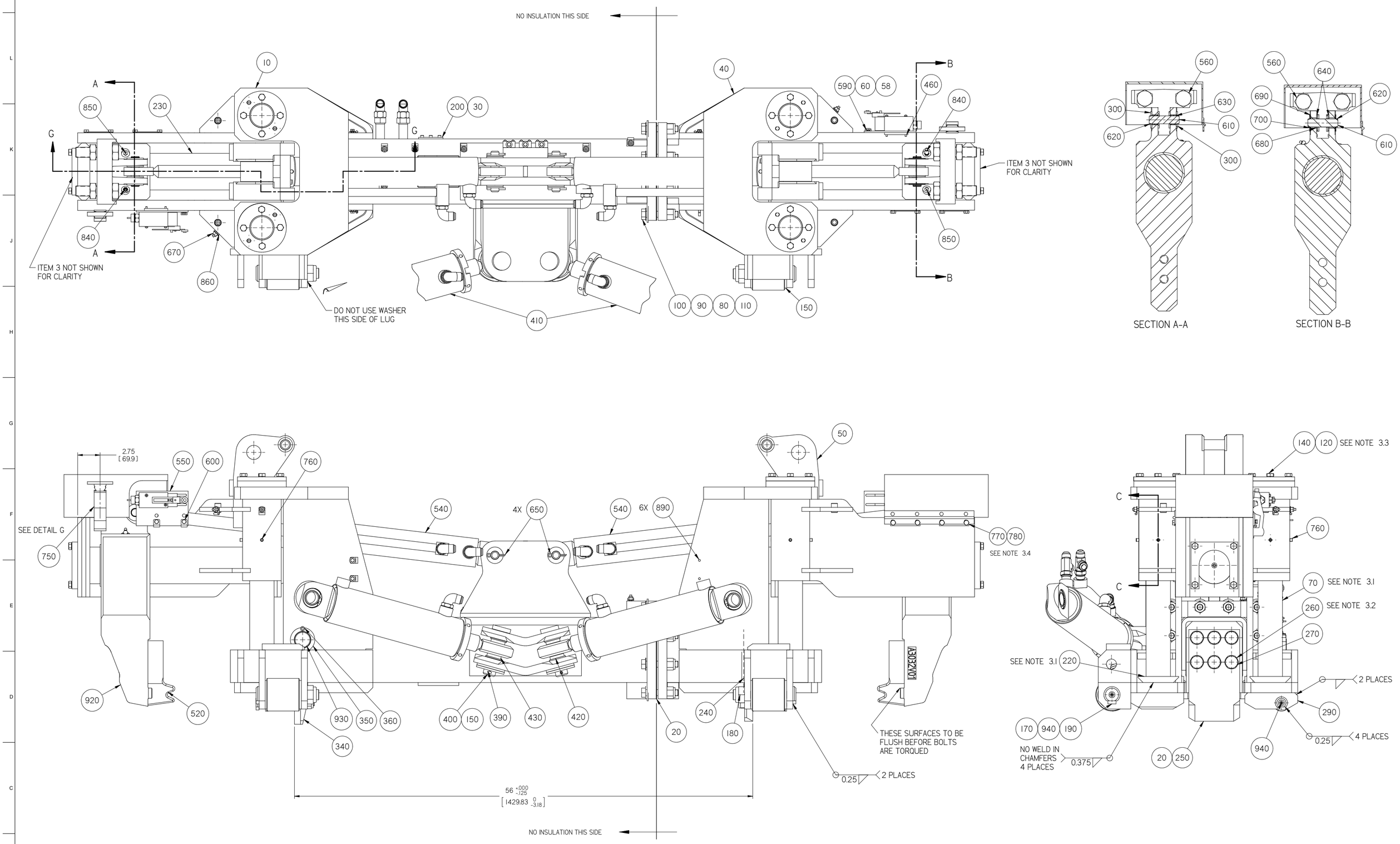

NOTES:

3.1. TO ALIGN GUIDE RODS, ITEM 21, IN REF TO CARRIER BOX ASSY, MOVE CARRIER BOX ASSY UP TO TOP PLATE, TACK WELD ITEM 17 TO TOP PLATE. LOWER CARRIER BOX ASSY TO BOTTOM PLATE, TACK WELD ITEM 5 TO BOTTOM PLATE. "MAKE SURE" CARRIER BOX ASSY SLIDES FREELY ON GUIDE RODS BEFORE FINAL WELDING.
3.2. TORQUE TO 265 FT*LB
3.3. TORQUE TO 90 FT*LB
3.4. BEND UP CORNERS OF LOCKING PLATE, ITEM 81. AFTER BOLTS ARE TIGHTENED.

CONFIDENTIAL
© COPYRIGHT 2009 HARSCO. THIS DRAWING OR DOCUMENT IS THE PROPERTY OF HARSCO AND EMBODIES CONFIDENTIAL INFORMATION, TRADE SECRET INFORMATION, AND/OR KNOW-HOW THAT IS THE PROPERTY OF HARSCO. BY ACCEPTING THIS DRAWING OR DOCUMENT, THE RECIPIENT AGREES (1) NOT TO PROVIDE, OR OTHERWISE MAKE AVAILABLE, THE DRAWING OR DOCUMENT, OR ANY INFORMATION OR KNOW-HOW EMBODIED THEREIN, TO ANY THIRD PARTY AND (2) NOT TO REPRODUCE OR USE THE DRAWING OR DOCUMENT TO MANUFACTURE ANY APPARATUS OR DEVICE, WITHOUT THE PRIOR WRITTEN AUTHORIZATION OF HARSCO.

SOLID EDGE DRAWING

IMPLIED TOLERANCES — ALL DIMENSIONS ARE IN INCHES — TOLERANCE UNLESS OTHERWISE SPECIFIED

INCH NOMINAL SIZE RANGE		PLUS OR MINUS		METRIC NOMINAL SIZE RANGE		PLUS OR MINUS	
OVER	TO	.1 PLACE	.2 PLACE	OVER	TO	.1 PLACE	.2 PLACE
0	6	.03	.005	0	150	.8	.13
6	24	.04	.008	150	600	1.0	.20
24	-	.06	.010	600	-	1.5	.25

UNLESS OTHERWISE SPECIFIED ALL MACHINED SURFACES WILL HAVE:
A SURFACE FINISH OF 125 MICROINCHES CIRCULAR TOOLMARKS OR CONCENTRICITY WITHIN .010

THIRD ANGLE PROJECTION

UNLESS OTHERWISE SPECIFIED, ALL WELDS SHOULD ADHERE TO THE MOST CURRENT A.W.S. WELDING STANDARDS

CHANGE	R/L	REVISION	DR	DATE
ECN-105989	D	SE DRAFT VERSION CREATED ITEM NO.'S SEQUENCE HAS BEEN ALTERED	SH	07-27-10
EC502519	E	,40237 QTY WAS 16, F001106 QTY WAS 22 & A0061008 QTY WAS 6, CHANGE NUMBERING SEQUENCE BECAUSE OF TEAMCENTER	HW	12-19-11
EC502767	F	ADDED DETAIL 'F' FOR WIRE ROUTING, DETAIL 'G' WAS 'F'	CJW	01-25-12

Description: COMBO CLAMP, 56 1/2
Drawing Number: ----------
Machine Type: MARK IV
Model: G85585VAD.asm
Drawn: skumar — Date Drawn: 27 Jul 10
Weight: 0.0 lbm — Scale: 1:4
APVD Eng: BPA — APVD Mfg: HW
Part Number: G85585VAD — Size: E — Sheet: 3 of 4
Part1: ---- ----

HARSCO RAIL

Inch [mm]

Plotted by mdongthen on 1/26/2012 G85585VAD.dft

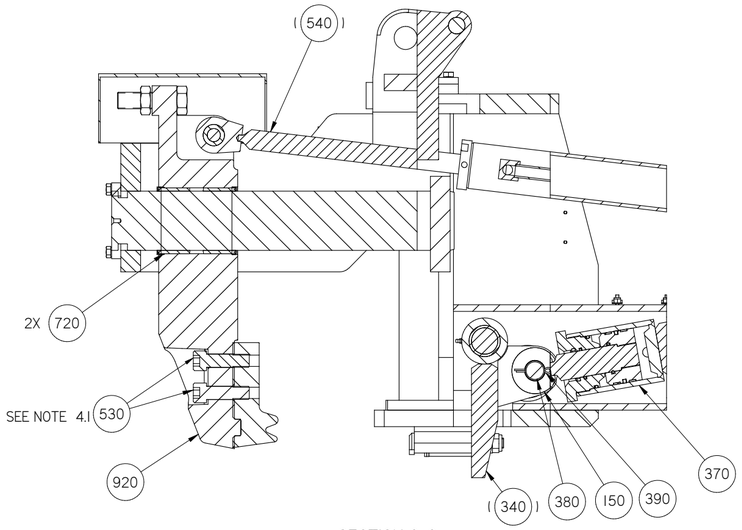

SECTION G-G

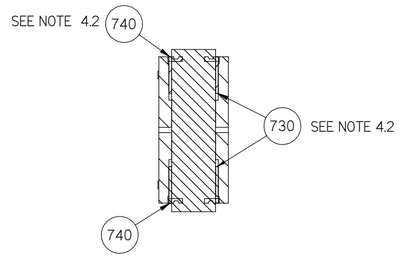

SECTION C-C

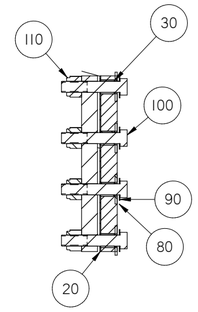

SECTION D-D

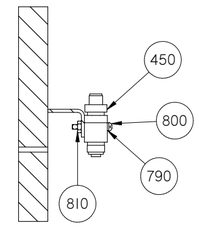

SECTION E-E
1:2

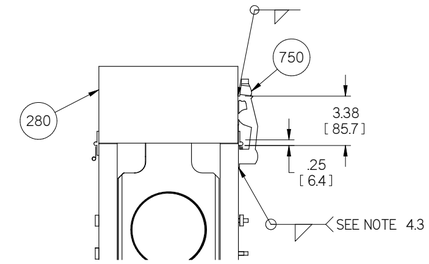

DETAIL G

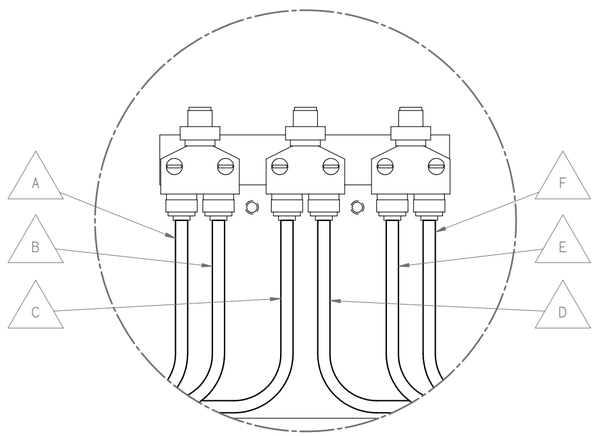

DETAIL F

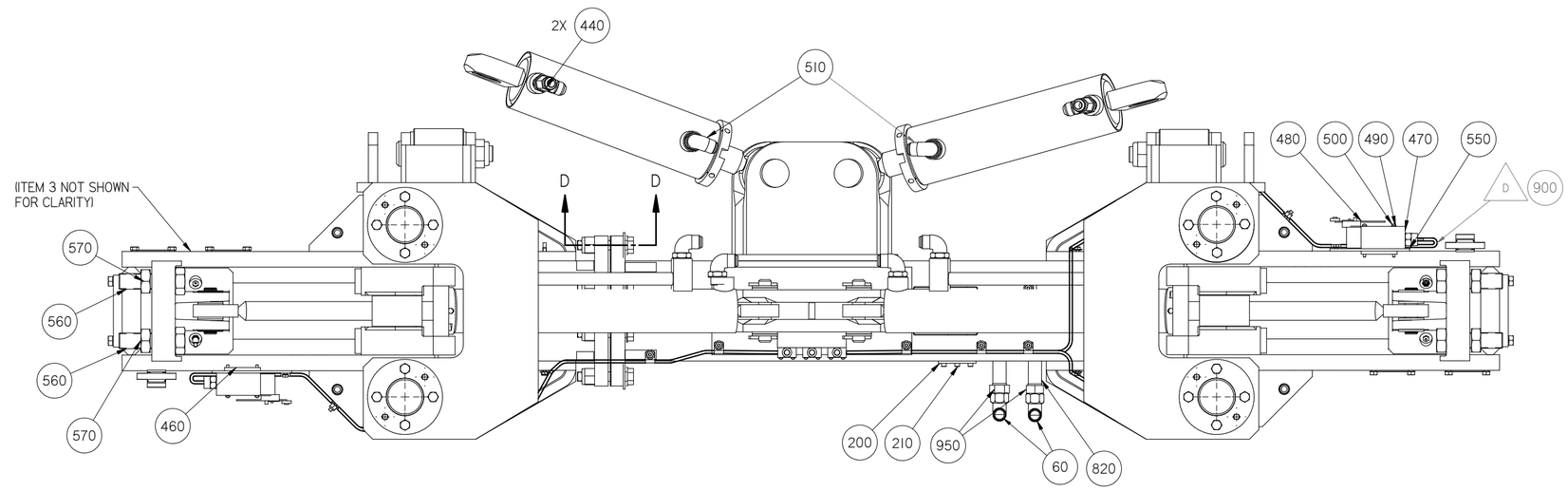

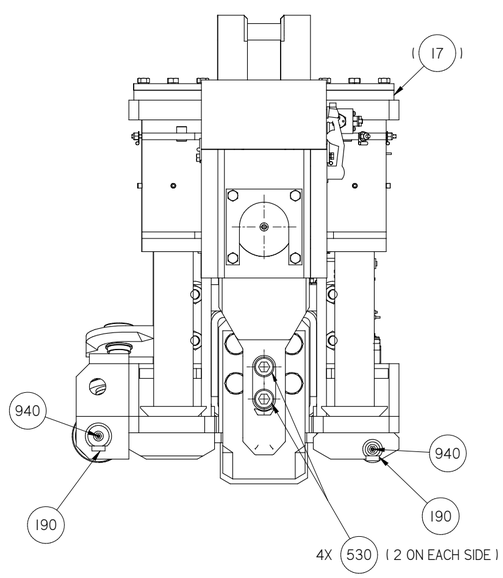

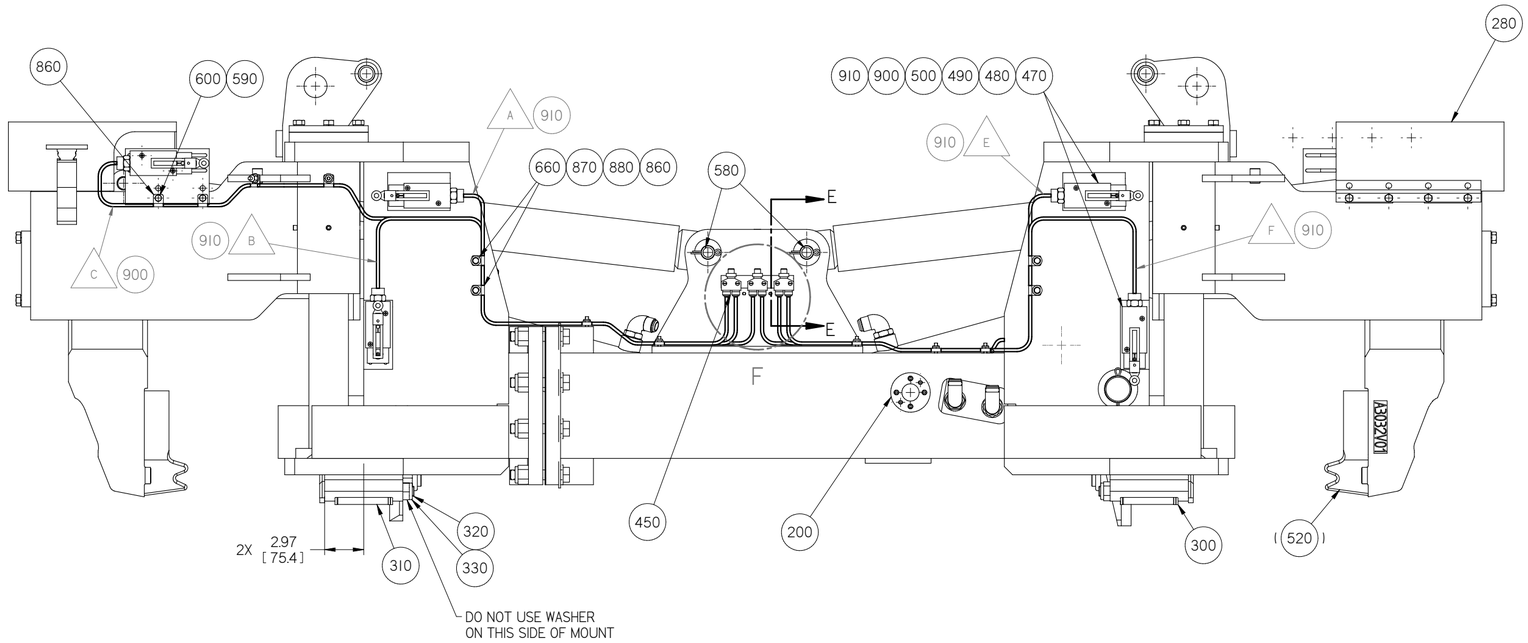

NOTES:

4.1. USE LOCTITE 0-3040000-0-07 & TORQUE TO 970 FT*LB
4.2. APPLY LOCTITE 0-3040000-0-12 TO BUSHING & WIPER.
4.3. WELD DRAW LATCH, ITEM 72, TO FRAME AS SHOWN
IN DETAIL F. WELD ONE EDGE AT A TIME ALLOWING
TIME TO COOL SO THAT TUBBER WILL NOT MELT.

CONFIDENTIAL

© COPYRIGHT 2009 HARSCO. THIS DRAWING OR DOCUMENT IS THE PROPERTY OF HARSCO AND EMBODIES CONFIDENTIAL INFORMATION, TRADE SECRET INFORMATION, AND/OR KNOW-HOW THAT IS THE PROPERTY OF HARSCO. BY ACCEPTING THIS DRAWING OR DOCUMENT, THE RECIPIENT AGREES (1) NOT TO PROVIDE, OR OTHERWISE MAKE AVAILABLE, THE DRAWING OR DOCUMENT, OR ANY INFORMATION OR KNOW-HOW EMBODIED THEREIN, TO ANY THIRD PARTY AND (2) NOT TO REPRODUCE OR USE THE DRAWING OR DOCUMENT TO MANUFACTURE ANY APPARATUS OR DEVICE, WITHOUT THE PRIOR WRITTEN AUTHORIZATION OF HARSCO.

SOLID EDGE DRAWING

IMPLIED TOLERANCES
ALL DIMENSIONS ARE IN INCHES . TOLERANCE UNLESS OTHERWISE SPECIFIED

INCH				METRIC			
NOMINAL SIZE		PLUS OR MINUS		NOMINAL SIZE		PLUS OR MINUS	
OVER	TO	1 PLACE DECIMAL	2 PLACE DECIMAL	OVER	TO	1 PLACE DECIMAL	2 PLACE DECIMAL
0	6	.03	.005	0	150	.8	.13
6	24	.04	.008	150	600	1.0	.20
24		.06	.010	600	-	1.5	.25

UNLESS OTHERWISE SPECIFIED ALL MACHINED SURFACES WILL HAVE:
A SURFACE FINISH OF 125 MICRONCHES
ANGULAR TOLERANCE OF ± 30'
CONCENTRICITY WITHIN .010

THIRD ANGLE PROJECTION

UNLESS OTHERWISE SPECIFIED, ALL WELDS SHOULD ADHERE TO THE MOST CURRENT A.W.S WELDING STANDARDS

CHANGE	R/L	REVISION	DR	DATE
ECN-105989	D	SE DRAFT VERSION CREATED ITEM NO.'s SEQUENCE HAS BEEN ALTERED	SH	07-27-10
EC502519	E	L40237 QTY WAS 16, F001106 QTY WAS 22 & A0061008 QTY WAS 6, CHANGE NUMBERING SEQUENCE BECAUSE OF TEAMCENTER	HW	12-19-11
EC502767	F	ADDED DETAIL 'F' FOR WIRE ROUTING, DETAIL 'G' WAS 'F'	CJW	01-25-12

Description: COMBO CLAMP, 56 1/2

Drawing Number: ----------

Machine Type: MARK IV

Model: G8585VAD.asm

Screen: skumar

Date Drawn: 27 Jul 10

Weight: 0.0 lbm

Scale: 1:4

APVD Mfg: BPA

APVD Dfg: HW

Part Number: G8585VAD

Size: E

Sheet: 4 of 4

HARSCO RAIL

Inch
[mm]

Plotted by mdonathen on 1/26/2012 G8585VAD.dft

CONFIDENTIAL
© COPYRIGHT 2009 HARSCO. THIS DRAWING OR DOCUMENT IS THE PROPERTY OF HARSCO AND EMBODIES CONFIDENTIAL INFORMATION, TRADE SECRET INFORMATION, AND/OR KNOW-HOW THAT IS THE PROPERTY OF HARSCO. BY ACCEPTING THIS DRAWING OR DOCUMENT, THE RECIPIENT AGREES (1) NOT TO PROVIDE, OR OTHERWISE MAKE AVAILABLE, THE DRAWING OR DOCUMENT, OR ANY INFORMATION OR KNOW-HOW EMBODIED THEREIN, TO ANY THIRD PARTY AND (2) NOT TO REPRODUCE OR USE THE DRAWING OR DOCUMENT TO MANUFACTURE ANY APPARATUS OR DEVICE, WITHOUT THE PRIOR WRITTEN AUTHORIZATION OF HARSCO.

SOLID EDGE DRAWING

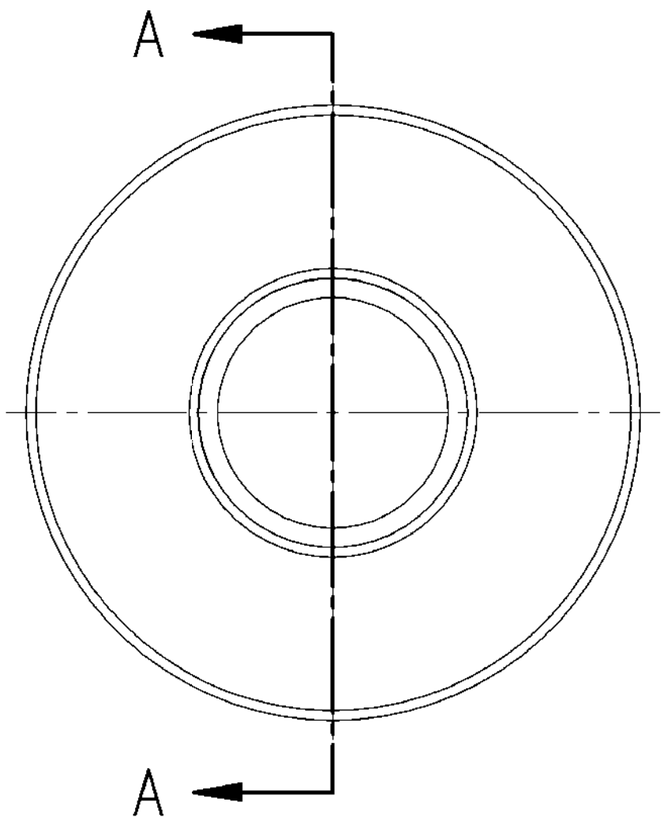

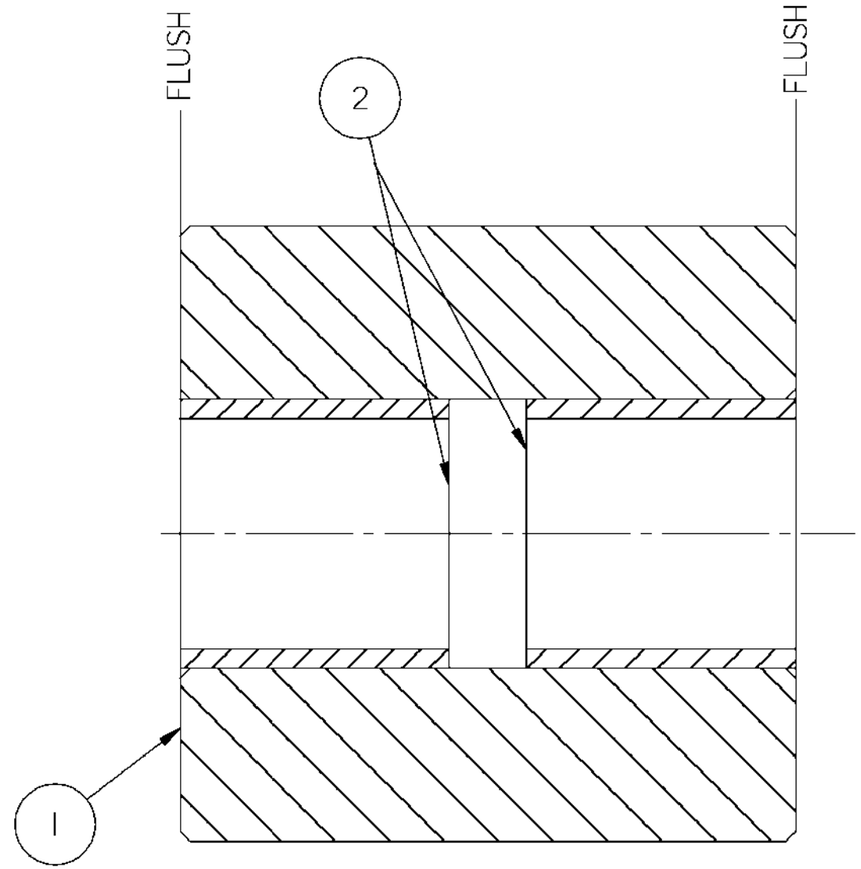

SECTION A-A

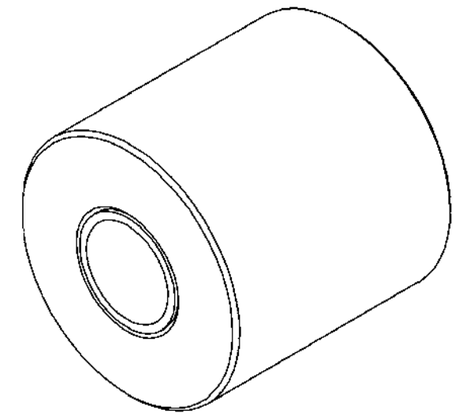

ITEM	PART NO	DESCRIPTION	QTY
2	0-3652009-0-25	BRONZE BEARING	2
1	0-1305760-0-01	ROLLER	1

Inch
[mm]

IMPLIED TOLERANCES
ALL DIMENSIONS ARE IN INCHES - TOLERANCE UNLESS OTHERWISE SPECIFIED

NOMINAL SIZE RANGE		INCH PLUS OR MINUS		NOMINAL SIZE RANGE		METRIC PLUS OR MINUS	
OVER	TO	2 PLACE DECIMAL	3 PLACE DECIMAL	OVER	TO	1 PLACE DECIMAL	2 PLACE DECIMAL
0	6	.03	.005	0	150	.8	.13
6	24	.04	.008	150	600	1.0	.20
24	-	.06	.010	600	-	1.5	.25

UNLESS OTHERWISE SPECIFIED, ALL MACHINED SURFACES WILL HAVE:
A SURFACE FINISH OF 125 MICROINCHES
ANGULAR TOLERANCE OF ± .50°
CONCENTRICITY WITHIN .010

THIRD ANGLE PROJECTION

UNLESS OTHERWISE SPECIFIED, ALL WELDS SHOULD ADHERE TO THE MOST CURRENT A.W.S WELDING STANDARDS

CHANGE	R/L	REVISION	DATE
ECN-105386	B	SE DRAFT VERSION CREATED	03-19-10

Description: ASSEMBLY, ROLLER

Drawing Number: ----------
Machine Type: MARK IV
Model: 0-2305761-0-01.asm
Drawn: skumar
Date Drawn: 18 Mar 10
Weight: 12.1 lbm
Scale: 1:1
APVD Desg: BPA
APVD ChEng: HW
Mat'l:

HARSCO RAIL

Part Number: 0-2305761-0-01
Size: B
Sheet: 1 of 1

Plotted by skumar on 4/13/2010 0-2305761-0-01.dft

CONFIDENTIAL
© COPYRIGHT 2009 HARSCO. THIS DRAWING OR DOCUMENT IS THE PROPERTY OF HARSCO AND EMBODIES CONFIDENTIAL INFORMATION, TRADE SECRET INFORMATION, AND/OR KNOW-HOW THAT IS THE PROPERTY OF HARSCO. BY ACCEPTING THIS DRAWING OR DOCUMENT, THE RECIPIENT AGREES (1) NOT TO PROVIDE, OR OTHERWISE MAKE AVAILABLE, THE DRAWING OR DOCUMENT, OR ANY INFORMATION OR KNOW-HOW EMBODIED THEREIN, TO ANY THIRD PARTY AND (2) NOT TO REPRODUCE OR USE THE DRAWING OR DOCUMENT TO MANUFACTURE ANY APPARATUS OR DEVICE, WITHOUT THE PRIOR WRITTEN AUTHORIZATION OF HARSCO.

SOLID EDGE DRAWING

Item Number	Document Number	Title	Quantity
1	A1676Y01	ROLLER	1
2	0-3652009-0-26	BRONZE BEARING	2

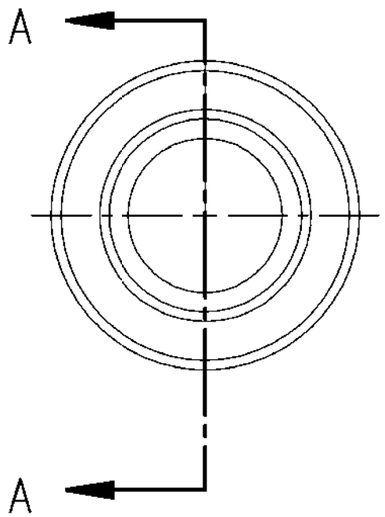

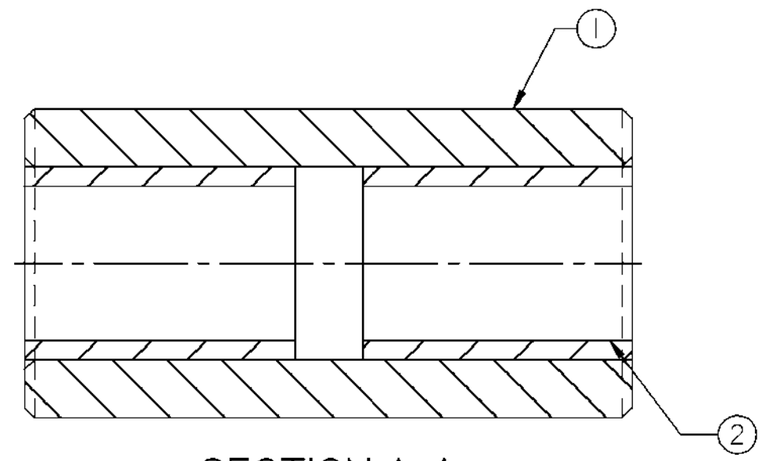

SECTION A-A

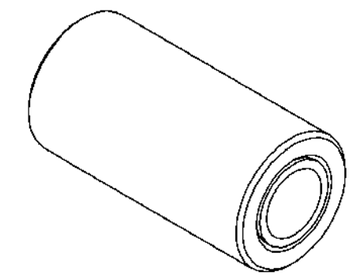

Inch
[mm]

IMPLIED TOLERANCES
ALL DIMENSIONS ARE IN INCHES - TOLERANCE UNLESS OTHERWISE SPECIFIED

NOMINAL SIZE RANGE		INCH PLUS OR MINUS		NOMINAL SIZE RANGE		METRIC PLUS OR MINUS	
OVER	TO	2 PLACE DECIMAL	3 PLACE DECIMAL	OVER	TO	1 PLACE DECIMAL	2 PLACE DECIMAL
0	6	.03	.005	0	150	8	.13
6	24	.04	.008	150	600	1.0	.20
24	-	.06	.010	600	-	1.5	.25

UNLESS OTHERWISE SPECIFIED, ALL MACHINED SURFACES WILL HAVE:
A SURFACE FINISH OF 125 MICROINCHES
ANGULAR TOLERANCE OF ± .50°
CONCENTRICITY WITHIN .010

THIRD ANGLE PROJECTION

UNLESS OTHERWISE SPECIFIED, ALL WELDS SHOULD ADHERE TO THE MOST CURRENT A.W.S WELDING STANDARDS

CHANGE	R/L	REVISION	DATE
ECN-105406	D	REDRAFTED IN SE BY HARSCO INDIA	3-26-10

Description: ASSY ROLLER

Drawing Number: ----------
Machine Type: Mark IV
Model: A1681YAA.asm
Drawn: rkamal
Date Drawn: 22 Mar 10
Weight: -----
Scale: 1:1
APVD Desg: BPA
APVD ChEng: HW
Mat'l: -----

HARSCO RAIL

Part Number: A1681YAA
Size: B
Sheet: 1 of 1

Plotted by rkamal on 3/26/2010 A1681YAA.dft

CONFIDENTIAL
© COPYRIGHT 2009 HARSCO. THIS DRAWING OR DOCUMENT IS THE PROPERTY OF HARSCO AND EMBODIES CONFIDENTIAL INFORMATION, TRADE SECRET INFORMATION, AND/OR KNOW-HOW THAT IS THE PROPERTY OF HARSCO. BY ACCEPTING THIS DRAWING OR DOCUMENT, THE RECIPIENT AGREES (1) NOT TO PROVIDE, OR OTHERWISE MAKE AVAILABLE, THE DRAWING OR DOCUMENT, OR ANY INFORMATION OR KNOW-HOW EMBODIED THEREIN, TO ANY THIRD PARTY AND (2) NOT TO REPRODUCE OR USE THE DRAWING OR DOCUMENT TO MANUFACTURE ANY APPARATUS OR DEVICE, WITHOUT THE PRIOR WRITTEN AUTHORIZATION OF HARSCO.

SOLID EDGE DRAWING

ITEM	PART NO	DESCRIPTION	QTY
1	A7657YAA	PAD, BIASING	1
2	0-3652009-0-15	PHOSPOR BRONZE BEARING	2
3	L40273	FITTING GREASE	1

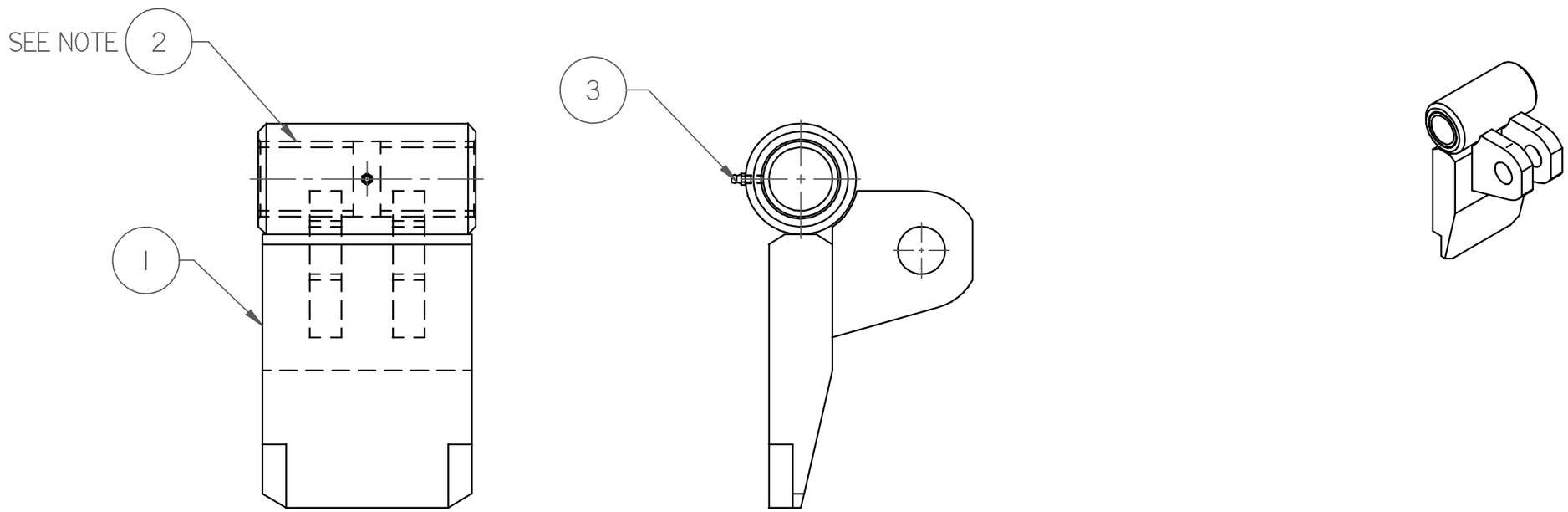

NOTE:

USE LOCTITE 0-3040000-0-05 TO ASSEMBLE

Inch
[mm]

IMPLIED TOLERANCES
ALL DIMENSIONS ARE IN INCHES - TOLERANCE UNLESS OTHERWISE SPECIFIED

NOMINAL SIZE RANGE		INCH PLUS OR MINUS		NOMINAL SIZE RANGE		METRIC PLUS OR MINUS	
OVER	TO	2 PLACE DECIMAL	3 PLACE DECIMAL	OVER	TO	1 PLACE DECIMAL	2 PLACE DECIMAL
0	6	.03	.005	0	150	.8	.13
6	24	.04	.008	150	600	1.0	.20
24	-	.06	.010	600	-	1.5	.25

UNLESS OTHERWISE SPECIFIED, ALL MACHINED SURFACES WILL HAVE:
A SURFACE FINISH OF 125 MICROINCHES
ANGULAR TOLERANCE OF ±.50°
CONCENTRICITY WITHIN .010

THIRD ANGLE PROJECTION

UNLESS OTHERWISE SPECIFIED, ALL WELDS SHOULD ADHERE TO THE MOST CURRENT A.W.S WELDING STANDARDS

CHANGE	R/L	REVISION	DATE
ECN-105427	E	SE DRAFT VERSION CREATED	03-31-10

Description: PAD ASSEMBLY, BIASING

Drawing Number: ----------

Machine Type: MARK IV

Model: A7660YAA.asm

Drawn: skumar

Date Drawn: 31 Mar 10

Weight: Error: No reference

Scale: 1:4

APVD Desg: BPA

APVD ChEng: HW

Mat'l

HARSCO RAIL

Part Number: A7660YAA

Size: B

Sheet: 1 of 1

Plotted by skumar on 2/24/2011 A7660YAA.dft

ITEM	PART NO	QTY	DESCRIPTION
10	B5691XAC	1	CYLINDER BODY ASSEMBLY 4"
20	B5498X01	1	ROD BUSHING
30	B5459X01	1	PISTON-4"
40	B5677XAA	1	ROD & LUG ASSEMBLY
50	A0062022	1	5/16-18X3/4 SHSSCR CUP
60	L424439	2	BUSHING USE F016962
70	L40001	4	RING RETAINING USE F013601
80	B5430YAA	1	SEAL KIT 4"CYL, 2"ROD

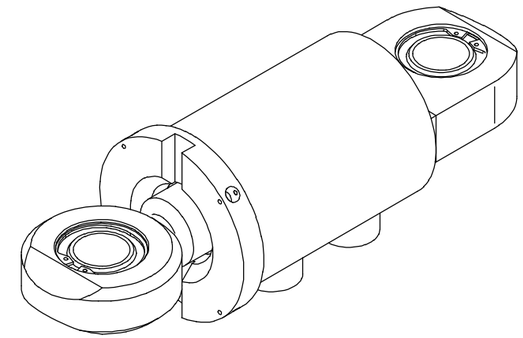

NOTES:

1. TIGHTEN ITEM 30 (PISTON) TO 150-100 LB. FT.
2. CYLINDER ASSEMBLY SHALL NOT LEAK AT ANY WELDED JOINT WHILE MAINTAINING 3000 PSI AT BOTH PORTS FOR FIVE MINUTES.
3. DRILL & TAP 5/16-18 - 2B X 1.0 DEEP (AT ASSEMBLY)
4. APPLY THREAD RETAINING COMPOUND, LOCTILE No.242, 0-3040000-0-16 TO ITEM 50.
5. INSTALL LOCK WIRE L424026 17GA (0.054 DIA)
6. FOR ITEM NO 80, ,SEE SEPARATE DRAWING B5430YAA (SEAL KIT)

PRESSURE RATING:

OPERATING - 2500 PSI (175 BAR)
BURST (MIN) - 10220 PSI (700 BAR)

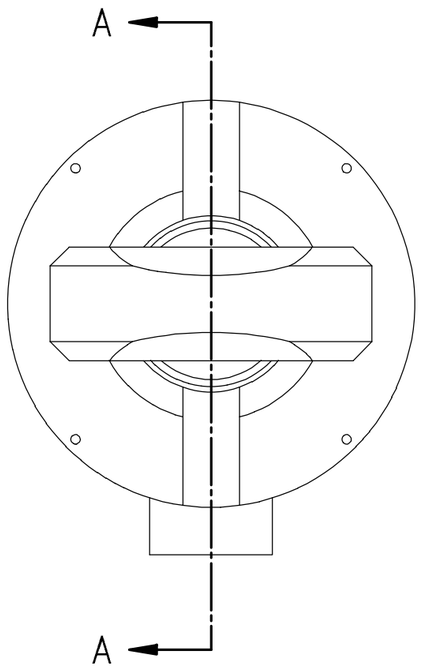

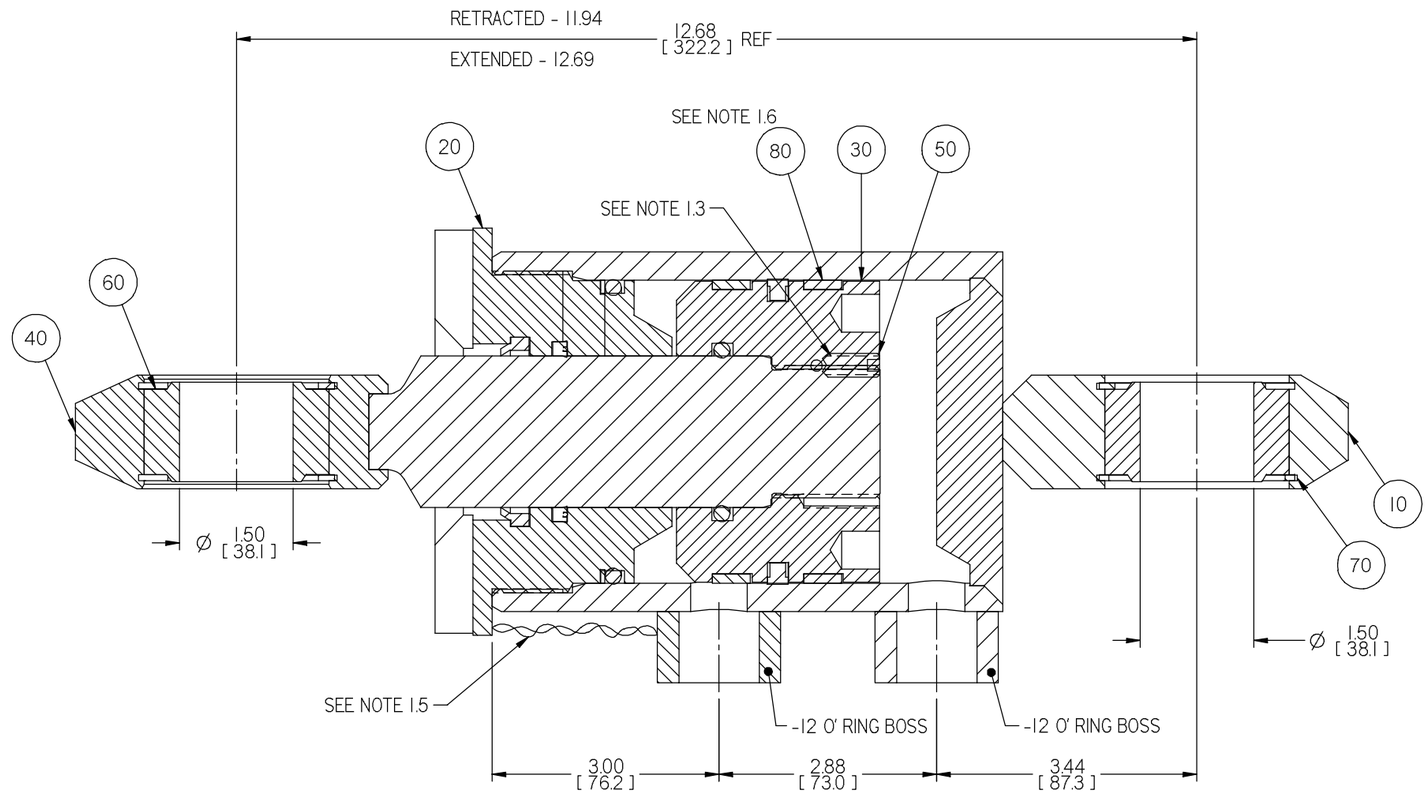

SECTION A-A

Inch
[mm]

CONFIDENTIAL.
© COPYRIGHT 2011 HARSCO. THIS DRAWING OR DOCUMENT IS THE PROPERTY OF HARSCO AND EMBODIES CONFIDENTIAL INFORMATION, TRADE SECRET INFORMATION, AND/OR KNOW-HOW THAT IS THE PROPERTY OF HARSCO. BY ACCEPTING THIS DRAWING OR DOCUMENT, THE RECIPIENT AGREES (1) NOT TO PROVIDE, OR OTHERWISE MAKE AVAILABLE, THE DRAWING OR DOCUMENT, OR ANY INFORMATION OR KNOW-HOW EMBODIED THEREIN, TO ANY THIRD PARTY AND (2) NOT TO REPRODUCE OR USE THE DRAWING OR DOCUMENT TO MANUFACTURE ANY APPARATUS OR DEVICE, WITHOUT THE PRIOR WRITTEN AUTHORIZATION OF HARSCO.

NOMINAL SIZE RANGE		INCH PLUS OR MINUS	
OVER	TO	2 PLACE DECIMAL	3 PLACE DECIMAL
0	6	.03	.005
6	24	.04	.008
24	-	.06	.010

NOMINAL SIZE RANGE		METRIC PLUS OR MINUS	
OVER	TO	1 PLACE DECIMAL	2 PLACE DECIMAL
0	150	.8	.13
150	600	1.0	.20
600	-	1.5	.25

UNLESS OTHERWISE SPECIFIED ALL MACHINED SURFACES WILL HAVE:
A SURFACE FINISH OF 125 MICROINCHES
ANGULAR TOLERANCE OF +- .87
CONCENTRICITY WITHIN .010

THIRD ANGLE PROJECTION

UNLESS OTHERWISE SPECIFIED, ALL WELDS SHOULD ADHERE TO THE MOST CURRENT A.W.S WELDING STANDARDS

CHANGE	R/L	REVISION	DR	DATE
ECN-105440	G	SE DRAFT VERSION CREATED	BPA	04-06-10

Description: CYLINDER, HYD - 4 "

HARSCO RAIL

Material: -; -
Weight: 0.0 lbm
SOLID EDGE DRAWING
Drawn: bpayyadakath 4/6/2011
DO NOT SCALE
Machine Type: MARK IV
Part Number: B5705XAB
Size: D
Sheet: 1 of 1

NOTES:
1. TIGHTEN ITEM 2 (PISTON) TO 150-100 LB. FT.
2. CYLINDER ASSEMBLY SHALL NOT LEAK AT ANY WELDED JOINT WHILE MAINTAINING 3000 PSI AT BOTH PORTS FOR FIVE MINUTES.
3. DRILL & TAP 5/16-18 - 2B X 1.0 DEEP (AT ASSEMBLY)
4. APPLY THREAD RETAINING COMPOUND, LOCTITE No.242, 0-3040000-0-16 TO ITEM 8.
5. INSTALL LOCK WIRE L424026 17GA (0.054 DIA)
6. THESE COMPONENTS ARE INCLUDED IN ITEM #8 SEAL KIT.

Item Number	Document Number	Title	Quantity
1	B5677XAB	ROD & LUG ASSY	1
2	B5459X01	PISTON-4"	1
3	B5498X01	ROD BUSHING	1
4	L40001	RETAINING RING	4
5	B5691XAL	CYLINDER BODY ASSEMBLY 4"	1
6	L424439	BEARING, 1 1/2 SPHR	2
7	A0062022	5/16-18 UNC SOC HD SET SCR	1
8*	B5430YAA	SEAL KIT	1

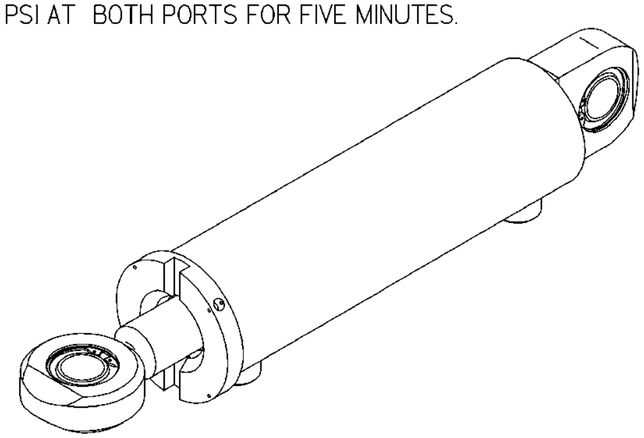

PRESSURE RATING:

OPERATING: 2,550 P.S.I (175 BAR)
BURST (MIN): 10,220 P.S.I (700 BAR)

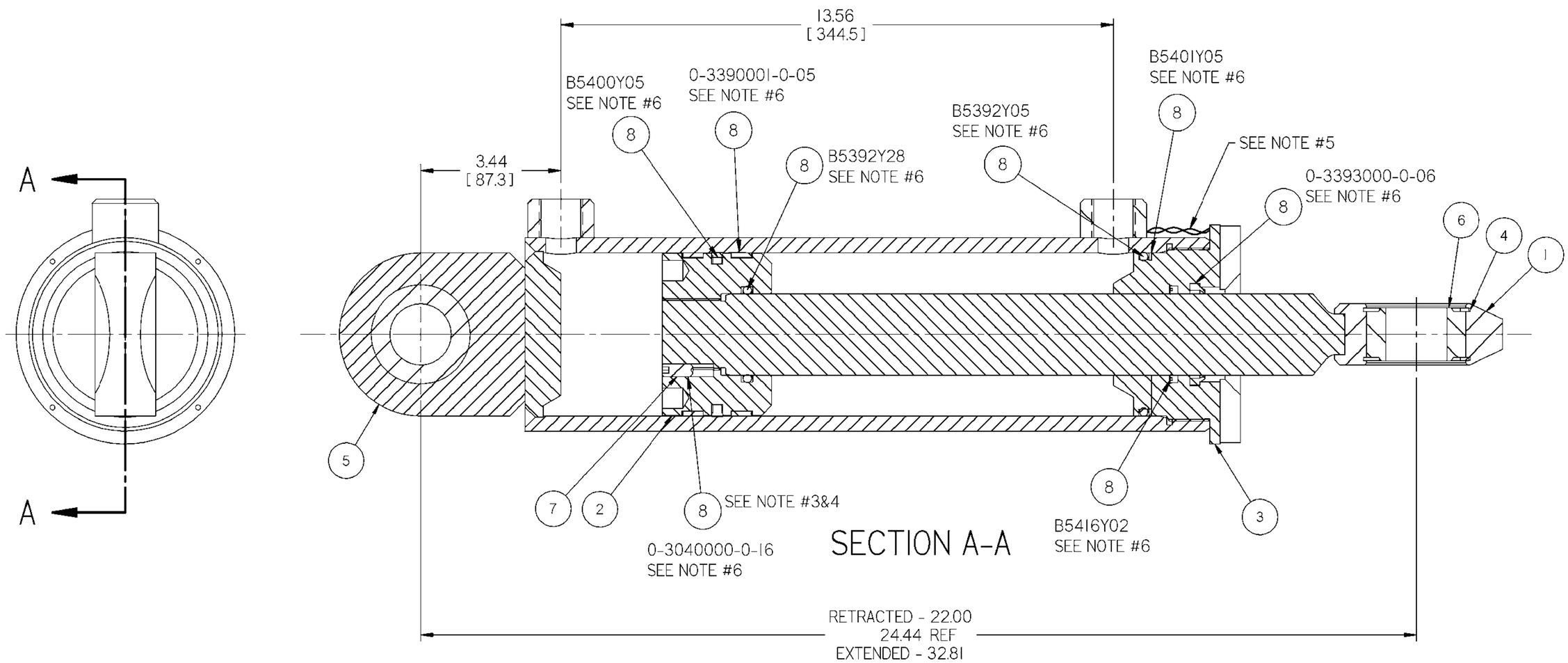

Inch
[mm]

SOLID EDGE DRAWING

CONFIDENTIAL

© COPYRIGHT 2009 HARSCO. THIS DRAWING OR DOCUMENT IS THE PROPERTY OF HARSCO AND EMBODIES CONFIDENTIAL INFORMATION, TRADE SECRET INFORMATION, AND/OR KNOW-HOW THAT IS THE PROPERTY OF HARSCO. BY ACCEPTING THIS DRAWING OR DOCUMENT, THE RECIPIENT AGREES (1) NOT TO PROVIDE, OR OTHERWISE MAKE AVAILABLE, THE DRAWING OR DOCUMENT, OR ANY INFORMATION OR KNOW-HOW EMBODIED THEREIN, TO ANY THIRD PARTY AND (2) NOT TO REPRODUCE OR USE THE DRAWING OR DOCUMENT TO MANUFACTURE ANY APPARATUS OR DEVICE, WITHOUT THE PRIOR WRITTEN AUTHORIZATION OF HARSCO.

IMPLIED TOLERANCES
ALL DIMENSIONS ARE IN INCHES - TOLERANCE UNLESS OTHERWISE SPECIFIED

INCH OVER	INCH TO	INCH PLUS OR MINUS 2 PLACE DECIMAL	INCH PLUS OR MINUS 3 PLACE DECIMAL	METRIC OVER	METRIC TO	METRIC PLUS OR MINUS 1 PLACE DECIMAL	METRIC PLUS OR MINUS 2 PLACE DECIMAL
0	6	.03	.005	0	150	.8	13
6	24	.04	.008	150	600	1.0	.20
24	-	.06	.010	600	-	1.5	25

UNLESS OTHERWISE SPECIFIED ALL MACHINED SURFACES WILL HAVE;
A SURFACE FINISH OF 125 MICROINCHES
ANGULAR TOLERANCE OF ± .50°
CONCENTRICITY WITHIN .010

THIRD ANGLE PROJECTION

UNLESS OTHERWISE SPECIFIED, ALL WELDS SHOULD ADHERE TO THE MOST CURRENT A.W.S WELDING STANDARDS

CHANGE	R/L	REVISION	DATE
ECN-105401	G	SE DRAFT VERSION CREATED (ITEM NUMBER SEQUENCE ALTERED)	03-24-10

Description: CYLINDER, HYDRAULIC - 4"
Drawing Number: ----------
Machine Type: MARK IV
Model: B5705XAF.asm
Drawn: bpayyadakkath
Date Drawn: 24 Mar 10
Weight:
Scale: 1:2
APVD Desg: SRK
APVD ChEng: HW
Mat'l:

HARSCO RAIL

Part Number: B5705XAF
Size: C
Sheet: 1 of 1

Plotted by bpayyadakkath on 8/9/2010 B5705XAF.dft

ITEM	PART NO	DESCRIPTION	QTY
	B5694XAA	CYLINDER BODY ASSEMBLY	1
2	B5677XAD	ROD AND LUG ASSEMBLY	1
3	L40705	SPHERICAL BEARING	2
4	B5458X0	PISTON	1
5	B5497X01	ROD BUSHING	1
6	B5392Y25	O RING	1
7	A0062022	5/16-18 UNC SOCKET SET SCR	1
8	B5429YAA	SEAL KIT	1

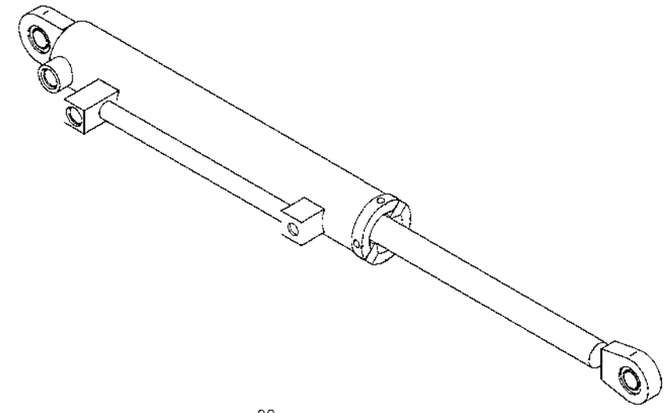

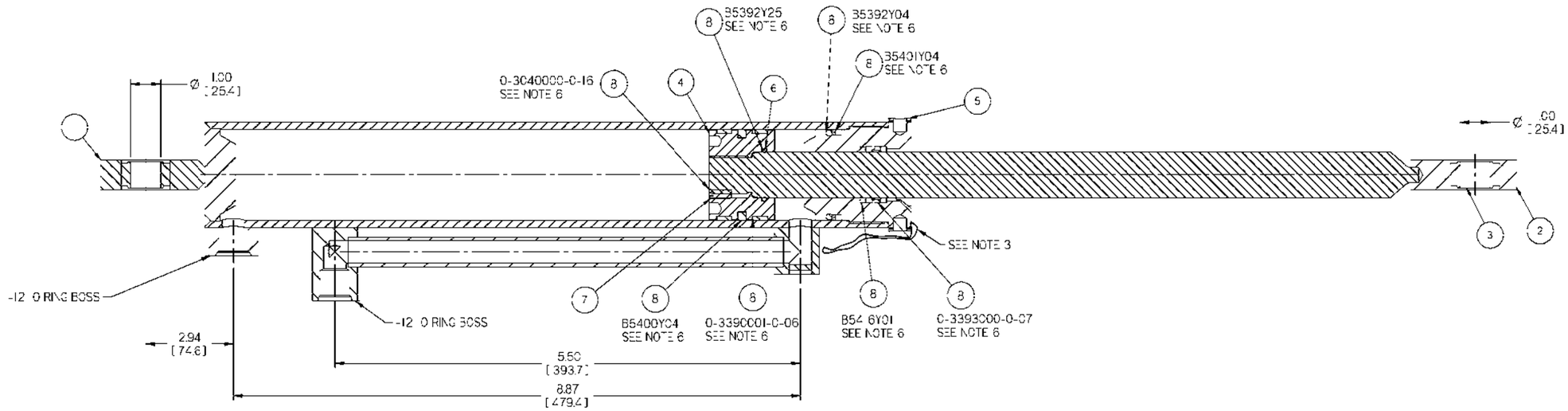

SECTION B-B

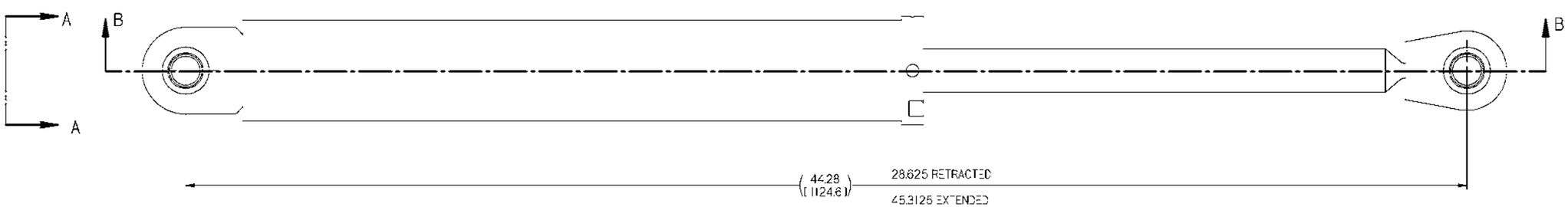

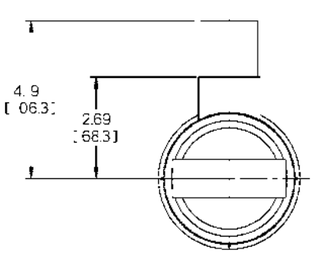

VIEW A-A

NOTES

1. TORQUE ITEM-4 (PISTON) TO 50-100 LB FT
2. CYLINDER ASSEMBLY SHALL NOT LEAK AT ANY WELDED JOINT WHILE MAINTAINING 3000 PSI AT BOTH PORTS FOR FIVE MINUTES.
3. INSTALL LOCKWIRE L424026 17 GA.1054 DIA
4. TAP DRILL 1/4" DEEP & 5/16-18 UNC-3B X 1" DEEP (AT ASSY)
5. PART NO. B5429YAA - SEAL KIT INCLUDES ITEMS-3,4,7,9, 0, , 2
6. SEE SEPARATE DRAWING FOR SEAL KIT ITEMS.

PRESSURE RATING

OPERATING ----
2,550 PSI (175 BAR)
BURST (MIN) ----
(6,220 PSI (700 BAR))

inch
[mm]

SOLID EDGE DRAWING

CONFIDENTIAL
© COPYRIGHT 2009 HARSCO. THIS DRAWING OR DOCUMENT IS THE PROPERTY OF HARSCO AND EVSCO IS CONFIDENTIAL INFORMATION, TRADE SECRET INFORMATION AND/OR KNOW-HOW THAT IS THE PROPERTY OF HARSCO. BY ACCEPTING THIS DRAWING OR DOCUMENT, THE RECIPIENT AGREES (1) NOT TO PROVIDE, OR OTHERWISE MAKE AVAILABLE, THE DRAWING OR DOCUMENT OR ANY INFORMATION OR KNOW-HOW EMBODIED THEREIN TO ANY THIRD PARTY AND (2) NOT TO REPRODUCE OR USE THE DRAWING OR DOCUMENT TO MANUFACTURE ANY APPARATUS OR DEVICE, WITHOUT THE PRIOR WRITTEN AUTHORIZATION OF HARSCO.

APPLIED TOLERANCES

CHANGE	REV	REVISION	DATE
ECN-25637	1	SEE DRAWING RECORD	04-08-10

DESCRIPTION: 3" BORE, 1/2" ROD CYLINDER ASSEMBLY
DRAWING NUMBER: ----------
PRODUCT LINE: MARK IV
MODEL: B5708XAA.asm
DRAWN: skumar 07 Apr 10
WEIGHT: 0.0 lbm
SCALE: 1:2
APPD Eng: BPA
APPD Eng: HW
MATL:
PART NUMBER: B5708XAA
REV: D
SHEET: 1 of 1

HARSCO RAIL

Plotted by skumar on 9/ 6/20 C:\5708XAA.dft

LINING COMPONENTS

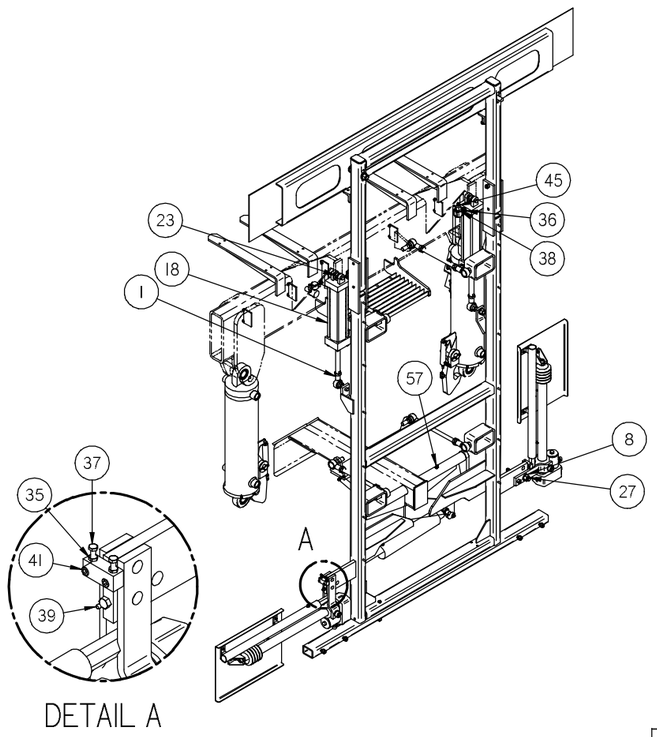

DETAIL A

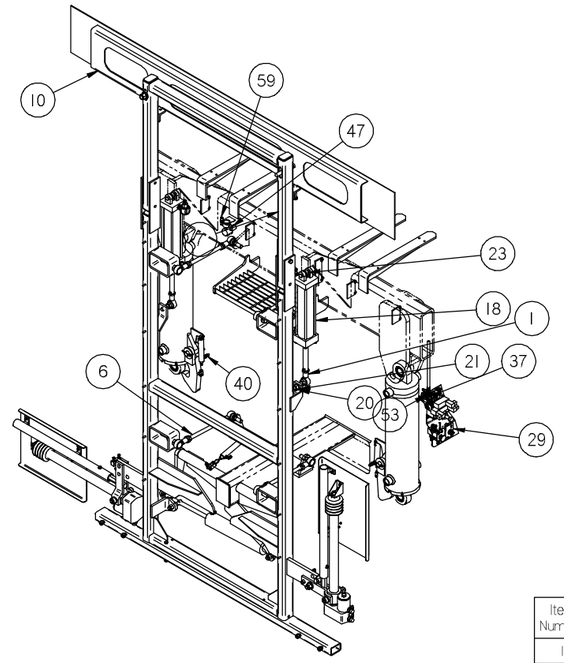

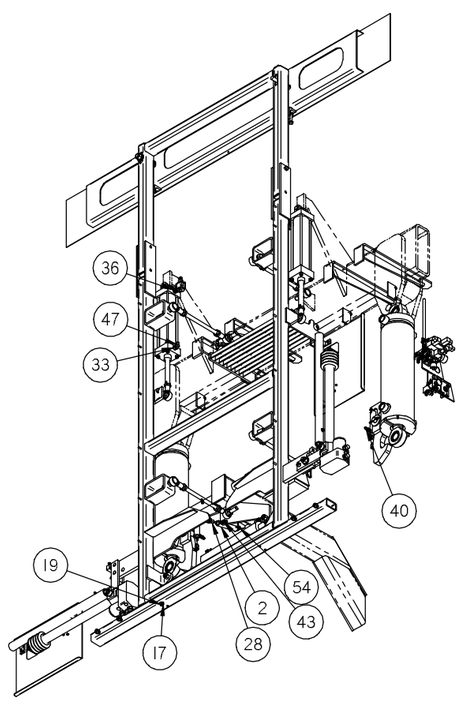

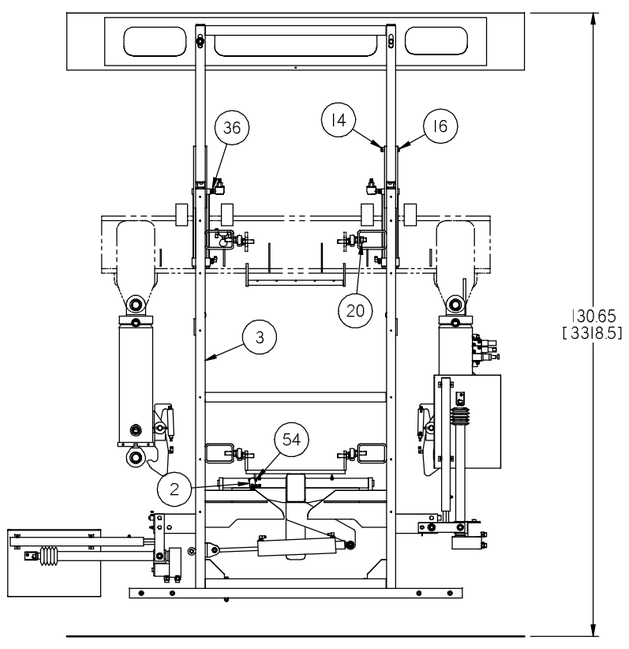

Item Number	Part Number	Description	Quantity
1	0-3652048-0-01	ROD END WITH STUD	2
2	A4771Y04	AIR CYL SINGLE ACTING	1
3	4021832	SHADOWBOARD FRAME	1
4	F011182	HEX ELASTIC STOP NUT .750-16	2
5*	4021700	BASE AND WHEELS ASSEMBLY	1
6	0-2303638-0-03	GIMBEL ASSY	4
7	C9258XAA	SHADOW BOARD TOP	1
8	F002929	DC-SAE WASHER 3/4 ZP *	9
9	0-3019002-0-07	3/4 HARDENED FL WASHER	4
10	C0763WAA	SHADOWBOARD	1
11*	A0978WAE	FLAG ARM ASSY, LINER RH	1
12*	A0978WAF	FLAG ARM ASSY, LINER LH	1
13	F001864	DC-HEX NUT 1/2-20 GR5 ZP	2
14	F013500	HEX ELASTIC STOP NUT .500-13	4
15	A0036161	1/2-20 X 3 1/2 HHCSC FULL THD	2
16	F001791	DC-HEX HD CAP SCR 1/2-13X3 1/2	4
17	F004600	HEX ELASTIC STOP NUT .375-16	4
18	C0839Y01	AIR CYL 3 1/4	2
19	700522475	HHCS .375-16X4.75	4
20	F005170	HEX NUT .750-16	10
21	F001354	DC-SAE RGLR LOCK WASHER 3/4 ZP	10
22	F012452	HEX ELASTIC STOP NUT .625-11	2
23	L41811	SPHERICAL BEARING	2
24	A0041158	5/8-11 X 3 SOC HD CP SCR	2
25*	0-2303635-0-06	AIR CYLINDER ASSEMBLY	1
26	A0215T46	SPACER	2
27	F013633_PAR2	3/4-10 HEX ELASTIC STOP	2
28	0-3014001-0-01	CLEVIS	1
B 29	4027637	NAMEPLATE, S/B LIFT	1
30	L424114	VALVE, LOCK	1

Item Number	Part Number	Description	Quantity
31	D4741Y01	PUSH/PULL AIR VALVE	1
32	F004214	DC-3/4-10X3 1/4 HH CS GR5 ZP	2
33	F014590	DC-STR 4FPTX8NPT	2
34	A2956Y01	HITCH PIN	2
35	F002368	HEX JAM NUT .250-20	4
36	F024212	REDUCER -8MP-4MP	2
37	F004178	HHCS .250-20X.875	6
38	G2774Y01	QUICK EXHAUST VALVE	2
39	L420428	1/4 GREASE FITTING	2
40	F013193	DC-STR 4X2NPT	2
41	F012429	SKT HD OVAL PT SS .500-13 X 1.00	4
42	F010680	DC- TEE 4FPTX4NPTX4FPT	2
43	A5443Y20	FITTING 90 DEGREE-1/8NPT	3
44	F015085	ELB 90 4X4FS	3
45	A5443Y10	COMPRESSION TUBE FITTING	4
46	F021905	TEE 4FSX4X4	1
47	A5443Y07	FITTING, COMPRESSN TUBE	3
48*	A5443Y04	FITTING, COMPRESSN TUBE	2
49	A5443Y05	COMPRESSION FITTING	1
50	L423094	HOSE, 1/4 LP	30
51*	A5524Y02	TUBING, PLASTIC	40
52	F012507	HOSE END FTG JIC 1/4"	8
53	F013588	DC-1/4-20 ELAS STP NUT	5
54	F001213	DC-HEX HD CAP SCR 1/4 - 20X1 1	1
57	F009420_PAR2	GREASE FTG 1/8 X 45	2
58*	L422845	REGULATOR, AIR	1
59	A5443Y09	COMPRESSION FITTING, TEE	1

CONFIDENTIAL

© COPYRIGHT 2001 HARSCO TRACK TECHNOLOGIES. THIS DRAWING OR DOCUMENT IS THE PROPERTY OF HARSCO TRACK TECHNOLOGIES AND EMBODIES CONFIDENTIAL INFORMATION, TRADE SECRET INFORMATION, AND/OR KNOW-HOW THAT IS THE PROPERTY OF HARSCO TRACK TECHNOLOGIES. BY ACCEPTING THIS DRAWING OR DOCUMENT, THE RECIPIENT AGREES (1) NOT TO PROVIDE, OR OTHERWISE MAKE AVAILABLE, THE DRAWING OR DOCUMENT, OR ANY INFORMATION OR KNOW-HOW EMBODIED THEREIN, TO ANY THIRD PARTY AND (2) NOT TO REPRODUCE OR USE THE DRAWING OR DOCUMENT TO MANUFACTURE ANY APPARATUS OR DEVICE, WITHOUT THE PRIOR WRITTEN AUTHORIZATION OF HARSCO TRACK TECHNOLOGIES.

SOLID EDGE DRAWING

IMPLIED TOLERANCES

ALL DIMENSIONS ARE IN INCHES - TOLERANCE UNLESS OTHERWISE SPECIFIED

INCH NOMINAL SIZE RANGE OVER	TO	PLUS OR MINUS 2 PLACE DECIMAL	3 PLACE DECIMAL	METRIC NOMINAL SIZE RANGE OVER	TO	PLUS OR MINUS 1 PLACE DECIMAL	2 PLACE DECIMAL
0	6	.03	.005	0	150	.8	.13
6	24	.04	.008	150	600	1.0	.20
24	-	.06	.010	-	600	1.5	.25

UNLESS OTHERWISE SPECIFIED ALL MACHINED SURFACES WILL HAVE A SURFACE FINISH OF 125 MICROINCHES ANGULAR TOLERANCE OF +.50° CONCENTRICITY WITHIN .010

THIRD ANGLE PROJECTION

UNLESS OTHERWISE SPECIFIED ALL WELDS SHOULD ADHERE TO THE LATEST HTT WELDING SPECIFICATION 101

CHANGE	R/L	REVISION			DATE
ECN-102830	A	RELEASE			
ECN-105037	B	PICTORIAL CORRECTION - REORIENTED S/B & LINER FLAGS IT 29 WAS C7848Y05	AO	HW	16 DEC 09

Description: SHADOWBOARD ASSEMBLY, INSTL

Drawing Number: ———— SHADOWBOARD ASSEMBLY, INSTL

Machine Type

Model: 4021904.asm

Drawn: aouzts — Date Drawn: 23 JUN 09

Weight: 0.0 lbm — Scale: — APVD Dwg: HW — APVD Chkg: HW

Mat'l: - -

HTT
Harsco Track Technologies
Harsco
Columbia, SC

Part Number: **4021904** — Size: D — Sheet: 1 of 2

Plotted by rgiordano on 11/29/2011 4021904.dft

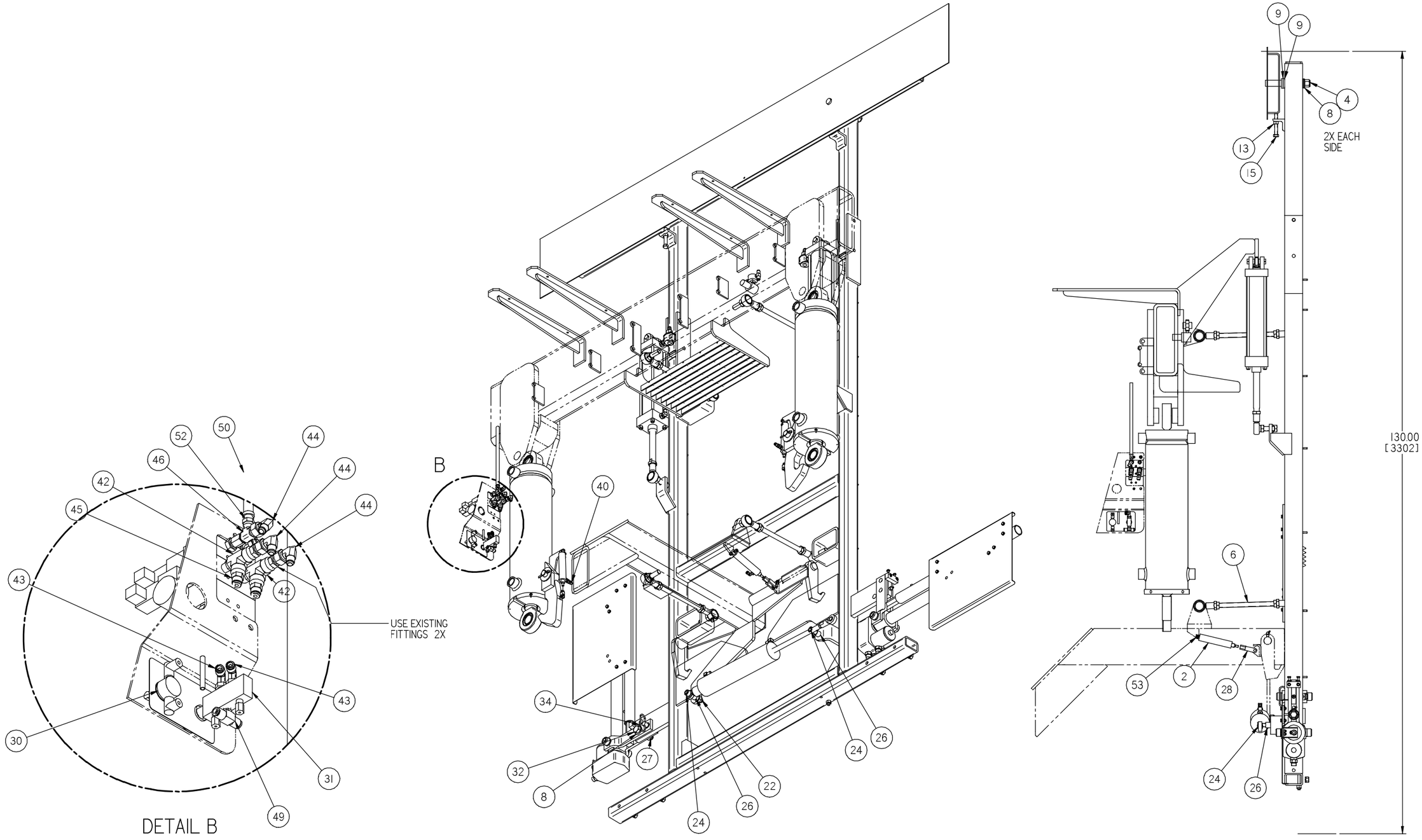

SOLID EDGE DRAWING

CONFIDENTIAL

© COPYRIGHT 2001 HARSCO TRACK TECHNOLOGIES. THIS DRAWING OR DOCUMENT IS THE PROPERTY OF HARSCO TRACK TECHNOLOGIES AND EMBODIES CONFIDENTIAL INFORMATION, TRADE SECRET INFORMATION, AND/OR KNOW-HOW THAT IS THE PROPERTY OF HARSCO TRACK TECHNOLOGIES. BY ACCEPTING THIS DRAWING OR DOCUMENT, THE RECIPIENT AGREES (1) NOT TO PROVIDE, OR OTHERWISE MAKE AVAILABLE, THE DRAWING OR DOCUMENT, OR ANY INFORMATION OR KNOW-HOW EMBODIED THEREIN, TO ANY THIRD PARTY AND (2) NOT TO REPRODUCE OR USE THE DRAWING OR DOCUMENT TO MANUFACTURE ANY APPARATUS OR DEVICE, WITHOUT THE PRIOR WRITTEN AUTHORIZATION OF HARSCO TRACK TECHNOLOGIES.

IMPLIED TOLERANCES

ALL DIMENSIONS ARE IN INCHES - TOLERANCE UNLESS OTHERWISE SPECIFIED

NOMINAL SIZE RANGE OVER	TO	INCH PLUS OR MINUS 2 PLACE DECIMAL	3 PLACE DECIMAL	NOMINAL SIZE RANGE OVER	TO	METRIC PLUS OR MINUS 1 PLACE DECIMAL	2 PLACE DECIMAL
0	6	.03	.005	0	150	.8	.13
6	24	.04	.008	150	600	1.0	.20
24	-	.06	.010	-	600	1.5	.25

UNLESS OTHERWISE SPECIFIED ALL MACHINED SURFACES WILL HAVE:
A SURFACE FINISH OF 125 MICROINCHES
ANGULAR TOLERANCE OF +.25°
CONCENTRICITY WITHIN .016

THIRD ANGLE PROJECTION

UNLESS OTHERWISE SPECIFIED ALL WELDS SHOULD ADHERE TO THE LATEST HTT WELDING SPECIFICATION 101

CHANGE	R/L	REVISION			DATE
ECN-102830	A	RELEASE			
ECN-105037	B	PICTORIAL CORRECTION - REORIENTED S/B & LINER FLAGS IT 29 WAS C7848Y05	AO	HW	16 DEC 09

Description: SHADOWBOARD ASSEMBLY, INSTL

Drawing Number: SHADOWBOARD ASSEMBLY, INSTL

Machine Type: Harsco

Model: 4021904.asm

Weight: 0.0 lbm

Scale:

Drawn: souzts

Date Drawn: 23 JUN 09

APVD Dwg: HW

APVD Chkg: HW

Mat'l: - -

HTT
Harsco Track Technologies
Columbia, SC

Part Number: 4021904

Size: D

Sheet: 2 of 2

Plotted by rgiordano on 11/29/2011 4021904.dft

Item Number	Part Number	Description	Quantity
10	4014388	TUBE, S/B BOTTOM	1
20	A0219WAA	WHEEL ASSY R/H	1
30	A0219WAB	WHEEL ASSY L/H	1
40	F004229	DC-HEX HD CAP SCR 1/2-13X4 1/2	4
50	A0061013	1/2 MED LOK WSHR	4
60	F003598	DC-HEX NUT 1/2-13 GR5 ZP	4

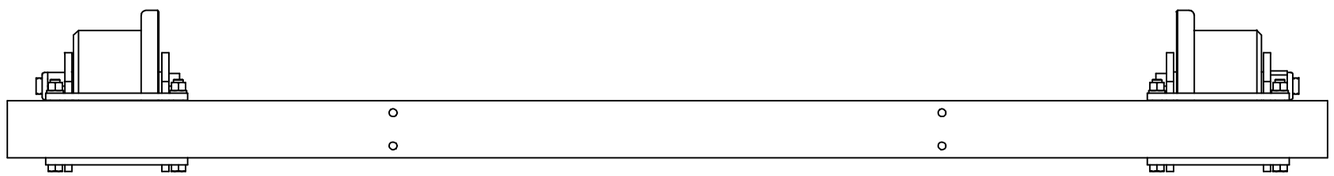

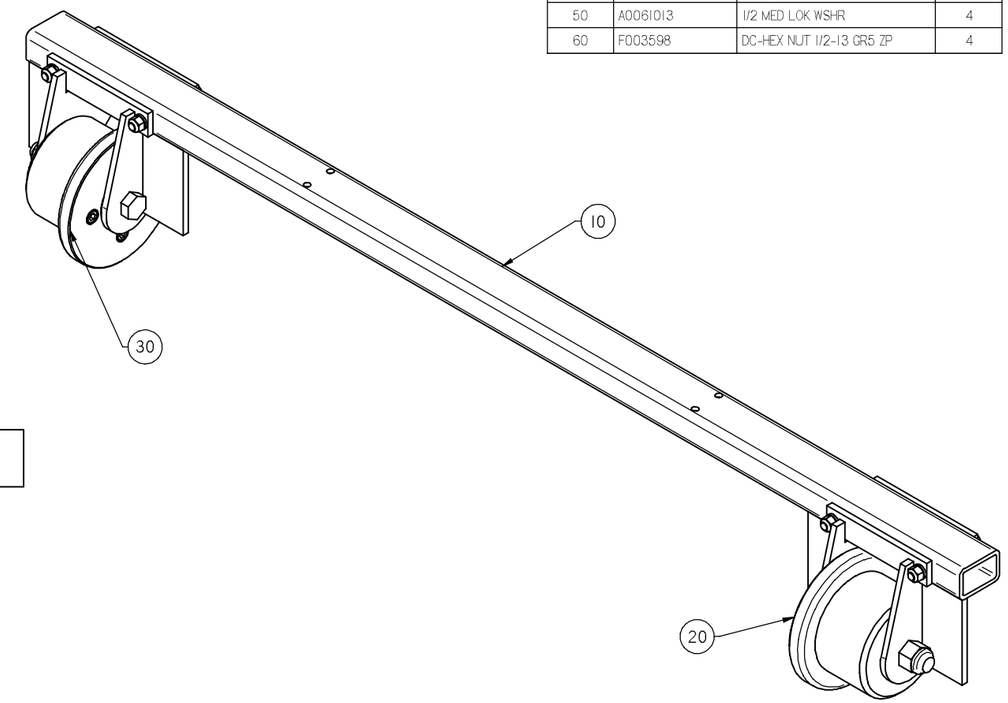

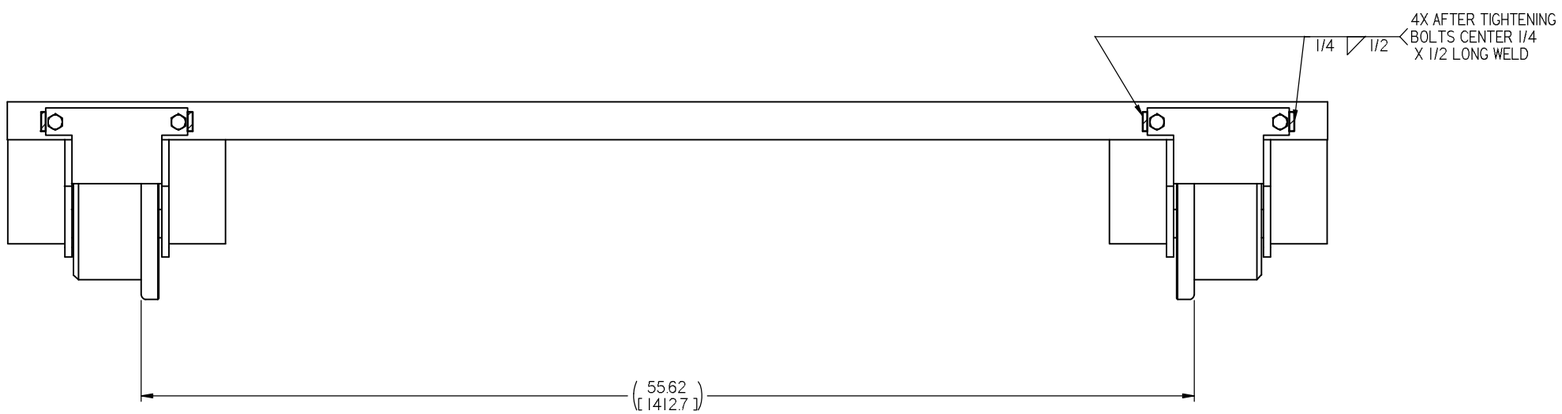

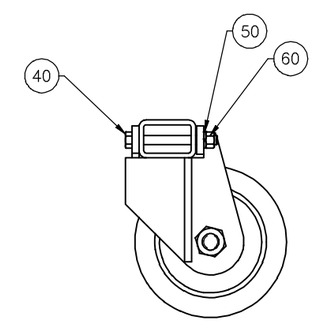

CONFIDENTIAL

© COPYRIGHT 2001 HARSCO TRACK TECHNOLOGIES. THIS DRAWING OR DOCUMENT IS THE PROPERTY OF HARSCO TRACK TECHNOLOGIES AND EMBODIES CONFIDENTIAL INFORMATION, TRADE SECRET INFORMATION, AND/OR KNOW-HOW THAT IS THE PROPERTY OF HARSCO TRACK TECHNOLOGIES. BY ACCEPTING THIS DRAWING OR DOCUMENT, THE RECIPIENT AGREES (1) NOT TO PROVIDE, OR OTHERWISE MAKE AVAILABLE, THE DRAWING OR DOCUMENT, OR ANY INFORMATION OR KNOW-HOW EMBODIED THEREIN, TO ANY THIRD PARTY AND (2) NOT TO REPRODUCE OR USE THE DRAWING OR DOCUMENT TO MANUFACTURE ANY APPARATUS OR DEVICE, WITHOUT THE PRIOR WRITTEN AUTHORIZATION OF HARSCO TRACK TECHNOLOGIES.

SOLID EDGE DRAWING

IMPLIED TOLERANCES

ALL DIMENSIONS ARE IN INCHES - TOLERANCE UNLESS OTHERWISE SPECIFIED

INCH NOMINAL SIZE RANGE OVER	TO	2 PLACE DECIMAL	3 PLACE DECIMAL	METRIC NOMINAL SIZE RANGE OVER	TO	1 PLACE DECIMAL	2 PLACE DECIMAL
0	6	.03	.005	0	150	.8	.13
6	24	.04	.008	150	600	1.0	.20
24	-	.06	.010	-	600	1.5	.25

PLUS OR MINUS

UNLESS OTHERWISE SPECIFIED ALL MACHINED SURFACES WILL HAVE:
A SURFACE FINISH OF 125 MICROINCHES
ANGULAR TOLERANCE OF +.25°
CONCENTRICITY WITHIN .016

THIRD ANGLE PROJECTION

UNLESS OTHERWISE SPECIFIED ALL WELDS SHOULD ADHERE TO THE LATEST HTT WELDING SPECIFICATION 101

CHANGE	R/L	REVISION	DATE
ECN-102719	A	NEW RELEASE	4-16-09
ECS00680	B	REDESIGN TO A BOLTED ON ASSEMBLY	4-11-11

Description: BASE AND WHEELS ASSEMBLY

Drawing Number: ----------

Machine Type: MARK IV

Model: 4021700.asm

Drawn: bbrunson — Date Drawn: 4-16-09

Weight: 144.6 lbm — Scale: 1:4 — APVD Dwg: JBR — APVD Chkng: JBR

Mat'l: - -

HTT
Harsco Track Technologies
Harsco
Columbia, SC

Part Number: **4021700** — Size: D — Sheet: 1 of 1

Plotted by hwiggins on 4/12/2011 4021700.dft

ITEM	PART NO	QTY	DESCRIPTION
10	A0213WAA	1	WHEEL BRACKET ASSY
20	0-1202407-0-01	1	WHEEL ROLLER
30	0-1202408-0-01	1	WHEEL FLANGE
40	0-3011001-0-07	1	LOCKNUT
50	A0036331	1	HHCS 7/8-9 X 7 GR5
60	Z752199	1	SPACER
70	Z752200	1	SPACER
80	Z752201	1	SPACER
90	F014338	4	1/2-13 X 1 1/4 SKT HD CS
100	Z752202-01-001	1	INSULATING BUSHING
110	F013601	2	RETAINING RING
120	L40213	2	BEARING
130	Z762124-001	2	INSULATING WASHER

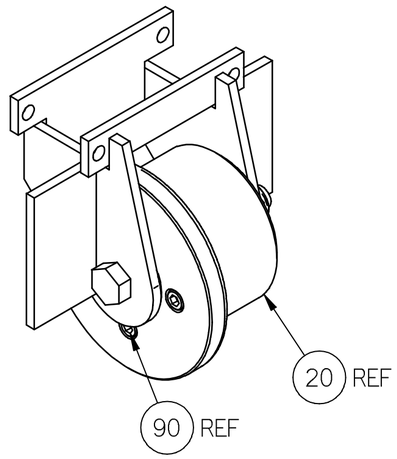

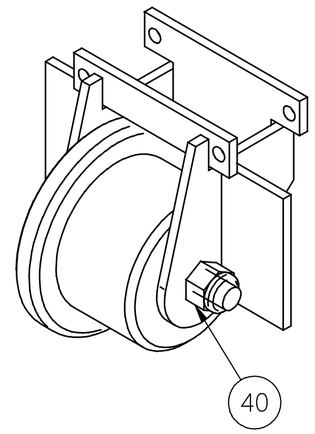

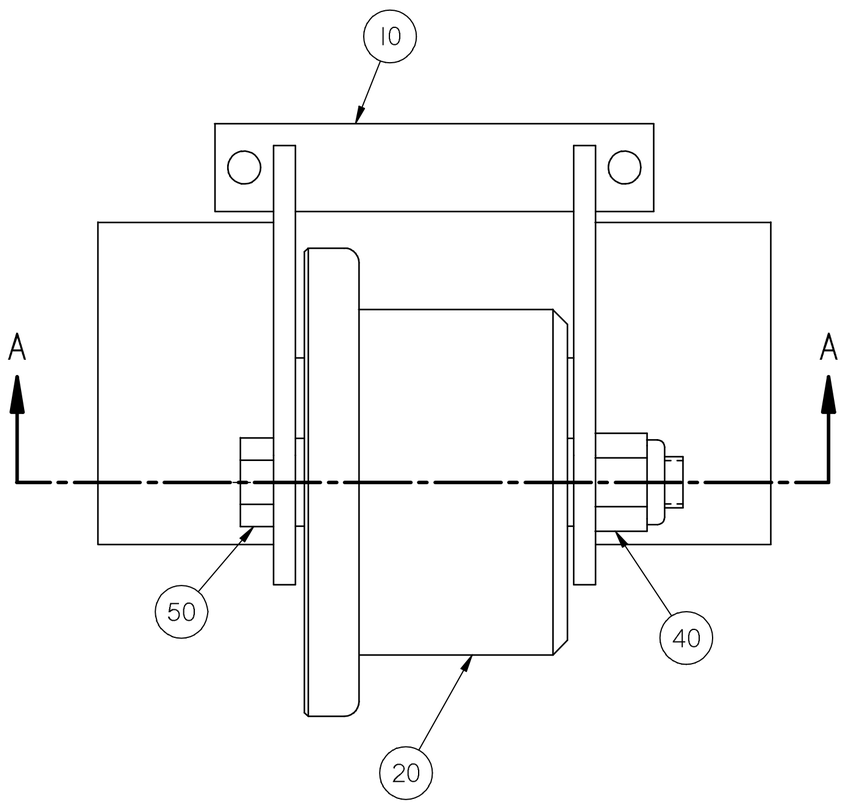

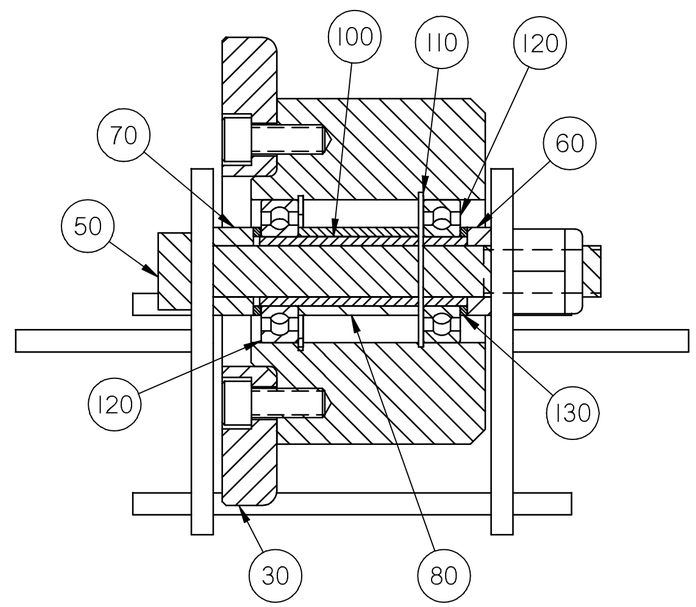

SECTION A-A

Inch
[mm]

SOLID EDGE DRAWING

CONFIDENTIAL

© COPYRIGHT 2009 HARSCO. THIS DRAWING OR DOCUMENT IS THE PROPERTY OF HARSCO AND EMBODIES CONFIDENTIAL INFORMATION, TRADE SECRET INFORMATION, AND/OR KNOW-HOW THAT IS THE PROPERTY OF HARSCO. BY ACCEPTING THIS DRAWING OR DOCUMENT, THE RECIPIENT AGREES (1) NOT TO PROVIDE, OR OTHERWISE MAKE AVAILABLE, THE DRAWING OR DOCUMENT, OR ANY INFORMATION OR KNOW-HOW EMBODIED THEREIN, TO ANY THIRD PARTY AND (2) NOT TO REPRODUCE OR USE THE DRAWING OR DOCUMENT TO MANUFACTURE ANY APPARATUS OR DEVICE, WITHOUT THE PRIOR WRITTEN AUTHORIZATION OF HARSCO.

IMPLIED TOLERANCES

ALL DIMENSIONS ARE IN INCHES - TOLERANCE UNLESS OTHERWISE SPECIFIED

NOMINAL SIZE RANGE		INCH PLUS OR MINUS		NOMINAL SIZE RANGE		METRIC PLUS OR MINUS	
OVER	TO	2 PLACE DECIMAL	3 PLACE DECIMAL	OVER	TO	1 PLACE DECIMAL	2 PLACE DECIMAL
0	6	.03	.005	0	150	.8	.13
6	24	.04	.008	150	600	1.0	.20
24	-	.06	.010	600	-	1.5	.25

UNLESS OTHERWISE SPECIFIED ALL MACHINED SURFACES WILL HAVE;
A SURFACE FINISH OF 125 MICROINCHES
ANGULAR TOLERANCE OF ±.50°
CONCENTRICITY WITHIN .010

THIRD ANGLE PROJECTION

UNLESS OTHERWISE SPECIFIED, ALL WELDS SHOULD ADHERE TO THE MOST CURRENT A.W.S WELDING STANDARDS

CHANGE	R/L	REVISION	DATE
ECN-106388	D	SE DRAFT VERSION CREATED	09-29-10

Description: WHEEL ASSY R/H

Drawing Number: ---

Machine Type: MARK IV

Model: A0219WAA.asm

Drawn: skumar

Date Drawn: 29 Sep 10

Weight: 51.6 lbm

Scale: 1:2

APVD Desg: BPA

APVD ChEng: HW

Mat'l: ----

HARSCO RAIL

Part Number: A0219WAA

Size: C

Sheet: 1 of 1

Plotted by skumar on 5/19/2011 A0219WAA.dft

ITEM	PART NO	QTY	DESCRIPTION
10	A0213WAA	1	WHEEL BRACKET ASSY
20	0-1202407-0-01	1	WHEEL ROLLER
30	0-1202408-0-01	1	WHEEL FLANGE
40	A0036331	1	HHCS 7/8-9 X 7 GR5
50	0-3011001-0-07	1	LOCKNUT
60	F014338	4	1/2-13 X 1 1/4 SKT HD CS
70	Z752200	1	SPACER
80	Z752199	1	SPACER
90	Z752202-01-001	1	INSULATING BUSHING
100	Z762124-001	2	INSULATING WASHER
110	Z752201	1	SPACER
120	F013601	2	RETAINING RING
130	L40213	2	BEARING

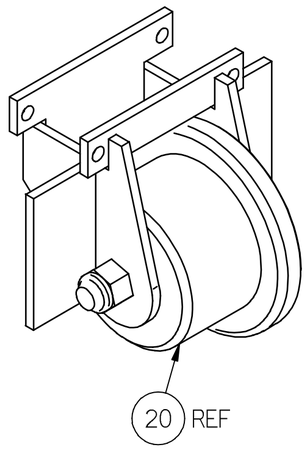

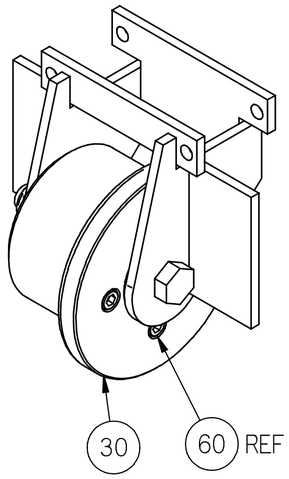

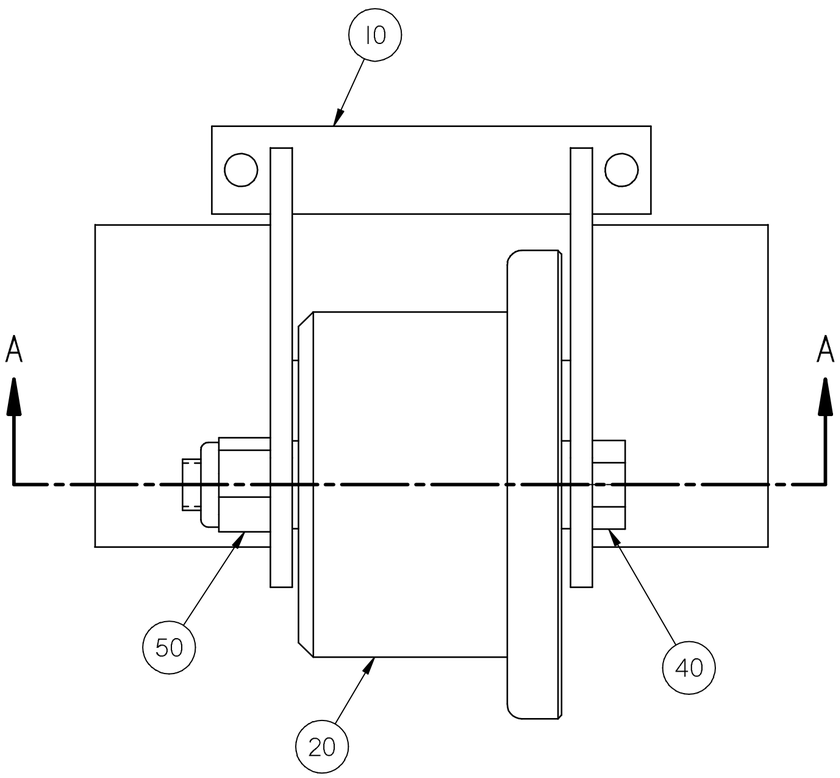

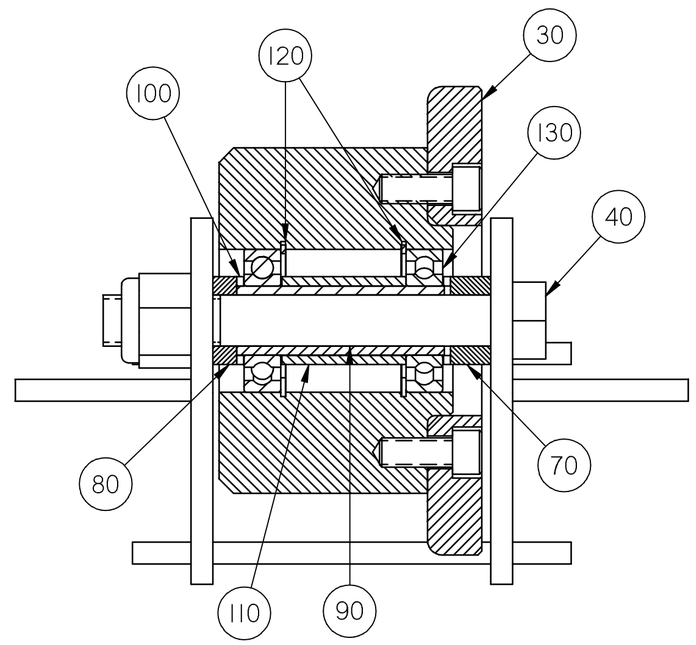

SECTION A-A

Inch
[mm]

SOLID EDGE DRAWING

CONFIDENTIAL

© COPYRIGHT 2009 HARSCO. THIS DRAWING OR DOCUMENT IS THE PROPERTY OF HARSCO AND EMBODIES CONFIDENTIAL INFORMATION, TRADE SECRET INFORMATION, AND/OR KNOW-HOW THAT IS THE PROPERTY OF HARSCO. BY ACCEPTING THIS DRAWING OR DOCUMENT, THE RECIPIENT AGREES (1) NOT TO PROVIDE, OR OTHERWISE MAKE AVAILABLE, THE DRAWING OR DOCUMENT, OR ANY INFORMATION OR KNOW-HOW EMBODIED THEREIN, TO ANY THIRD PARTY AND (2) NOT TO REPRODUCE OR USE THE DRAWING OR DOCUMENT TO MANUFACTURE ANY APPARATUS OR DEVICE, WITHOUT THE PRIOR WRITTEN AUTHORIZATION OF HARSCO.

IMPLIED TOLERANCES

ALL DIMENSIONS ARE IN INCHES - TOLERANCE UNLESS OTHERWISE SPECIFIED

INCH NOMINAL SIZE RANGE OVER	TO	INCH PLUS OR MINUS 2 PLACE DECIMAL	INCH PLUS OR MINUS 3 PLACE DECIMAL	METRIC NOMINAL SIZE RANGE OVER	TO	METRIC PLUS OR MINUS 1 PLACE DECIMAL	METRIC PLUS OR MINUS 2 PLACE DECIMAL
0	6	.03	.005	0	150	.8	.13
6	24	.04	.008	150	600	1.0	.20
24	-	.06	.010	600	-	1.5	.25

UNLESS OTHERWISE SPECIFIED ALL MACHINED SURFACES WILL HAVE;
A SURFACE FINISH OF 125 MICROINCHES
ANGULAR TOLERANCE OF ± .50°
CONCENTRICITY WITHIN .010

THIRD ANGLE PROJECTION

UNLESS OTHERWISE SPECIFIED, ALL WELDS SHOULD ADHERE TO THE MOST CURRENT A.W.S WELDING STANDARDS

CHANGE	R/L	REVISION	DATE
ECN-106388	D	SE DRAFT VERSION CREATED	09-29-10

Description: WHEEL ASSY L/H

Drawing Number: ---

Machine Type: MARK IV

Model: A0219WAB.asm

Drawn: skumar

Date Drawn: 29 Sep 10

Weight: 51.6 lbm

Scale: 1:2

APVD Desg: BPA

APVD ChEng: HW

Mat'l: ----

HARSCO RAIL

Part Number: A0219WAB

Size: C

Sheet: 1 of 1

Plotted by skumar on 5/19/2011 A0219WAB.dft

CONFIDENTIAL
© COPYRIGHT 2009 HARSCO. THIS DRAWING OR DOCUMENT IS THE PROPERTY OF HARSCO AND EMBODIES CONFIDENTIAL INFORMATION, TRADE SECRET INFORMATION, AND/OR KNOW-HOW THAT IS THE PROPERTY OF HARSCO. BY ACCEPTING THIS DRAWING OR DOCUMENT, THE RECIPIENT AGREES (1) NOT TO PROVIDE, OR OTHERWISE MAKE AVAILABLE, THE DRAWING OR DOCUMENT, OR ANY INFORMATION OR KNOW-HOW EMBODIED THEREIN, TO ANY THIRD PARTY AND (2) NOT TO REPRODUCE OR USE THE DRAWING OR DOCUMENT TO MANUFACTURE ANY APPARATUS OR DEVICE, WITHOUT THE PRIOR WRITTEN AUTHORIZATION OF HARSCO.

SOLID EDGE DRAWING

ITEM	PART NO	QTY	DESCRIPTION
10	A060IT45	1	THREADED ROD
20	0-3652048-0-01	2	ROD END WITH STUD
30	A0056035	2	3/4-16 HVY HEX JAM NUT

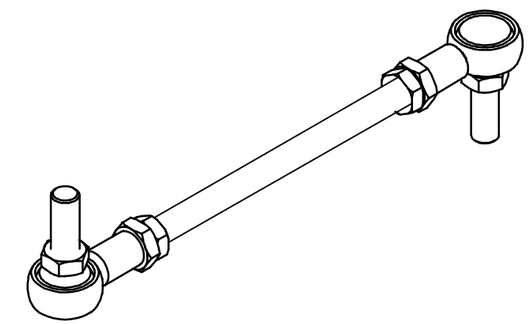

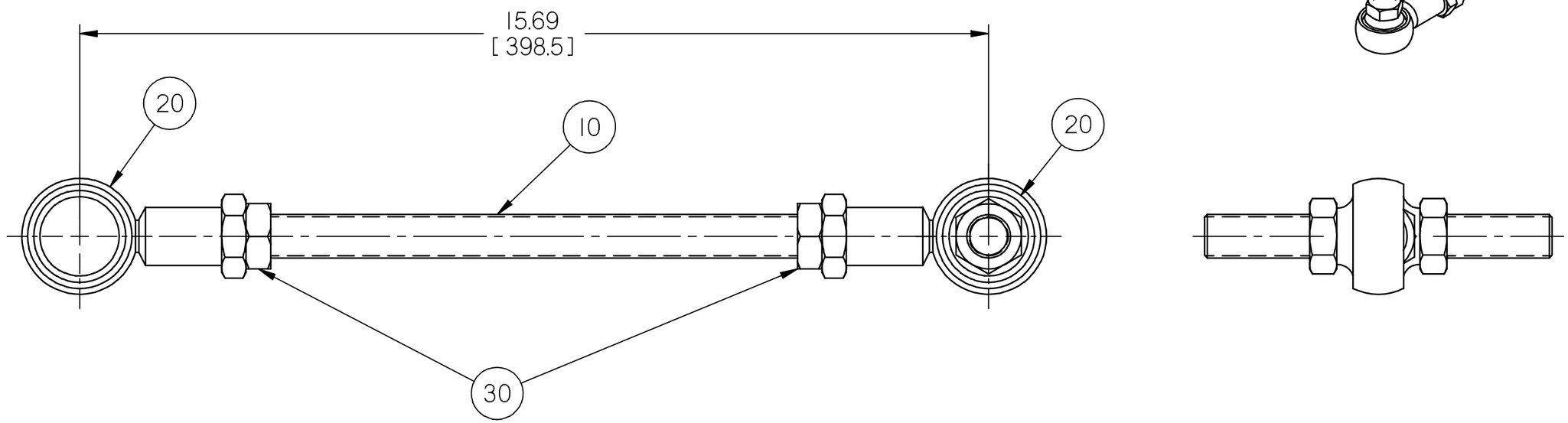

Inch
[mm]

IMPLIED TOLERANCES
ALL DIMENSIONS ARE IN INCHES - TOLERANCE UNLESS OTHERWISE SPECIFIED

NOMINAL SIZE RANGE		INCH PLUS OR MINUS		NOMINAL SIZE RANGE		METRIC PLUS OR MINUS	
OVER	TO	2 PLACE DECIMAL	3 PLACE DECIMAL	OVER	TO	1 PLACE DECIMAL	2 PLACE DECIMAL
0	6	.03	.005	0	150	.8	.13
6	24	.04	.008	150	600	1.0	.20
24	-	.06	.010	600	-	1.5	.25

UNLESS OTHERWISE SPECIFIED, ALL MACHINED SURFACES WILL HAVE:
A SURFACE FINISH OF 125 MICROINCHES
ANGULAR TOLERANCE OF ± .50°
CONCENTRICITY WITHIN .010

THIRD ANGLE PROJECTION

UNLESS OTHERWISE SPECIFIED, ALL WELDS SHOULD ADHERE TO THE MOST CURRENT A.W.S WELDING STANDARDS

CHANGE	R/L	REVISION	DATE
ECN-106388	B	SE DRAFT VERSION CREATED	08-17-10

Description: GIMBEL ASSY
Drawing Number: ---
Machine Type: MARK IV
Model: 0-2303638-0-03.asm
Drawn: skumar
Date Drawn: 17 Aug 10
Weight: 4.4 lbm
Scale: 1:2
APVD Desg: BPA
APVD ChEng: HW
Mat'l --- ---

HARSCO RAIL

Part Number: 0-2303638-0-03
Size: B
Sheet: 1 of 1

Plotted by skumar on 5/19/2011 0-2303638-0-03.dft

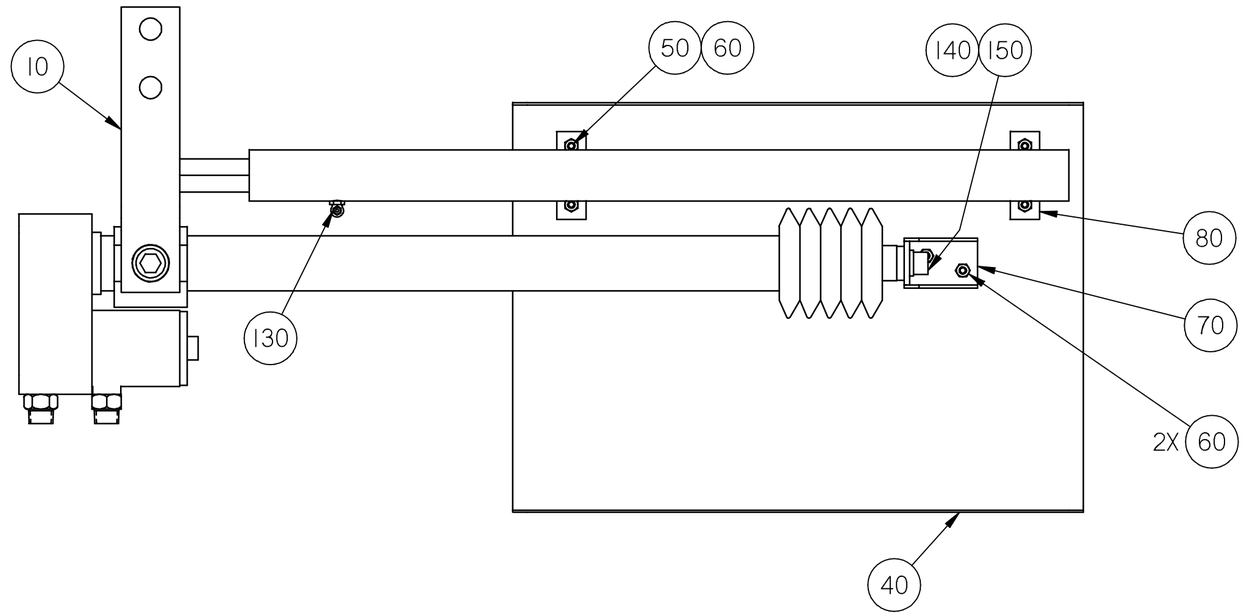

ITEM	PART NO	QTY	DESCRIPTION
10	B4838XAA	1	SUPPORT ARM ASSY
20	F001354	2	DC-SAE RGLR LOCK WASHER 3/4 ZP
30	A0926Y01	2	PIVOT PIN
40	A0900W01	1	FLAG LINER
50	F002355	6	DC-HHD CAP SCR1/4-20X3/4GR5
60	F007022	6	DC-HEX NUT 1/4-20 GR5 ZP
70	A0899YAA	1	BRACKET
80	A9091XAA	1	GUIDE ASSY, FLAG
90	A0061008	6	1/4 MED LOK WSHR
100	C0046XAC	1	LINEAR ACTUATOR ASSEMBLY
110	A7347Y01	1	ACTUATOR BOOT
120	0-3274003-0-09	2	NYLON HOLE PLUG
130	L425183	1	90 DEG. FITTING
140	A0061013	1	1/2 MED LOK WSHR
150	A0041144	1	1/2-20X1 SOC HD CAPSCREW

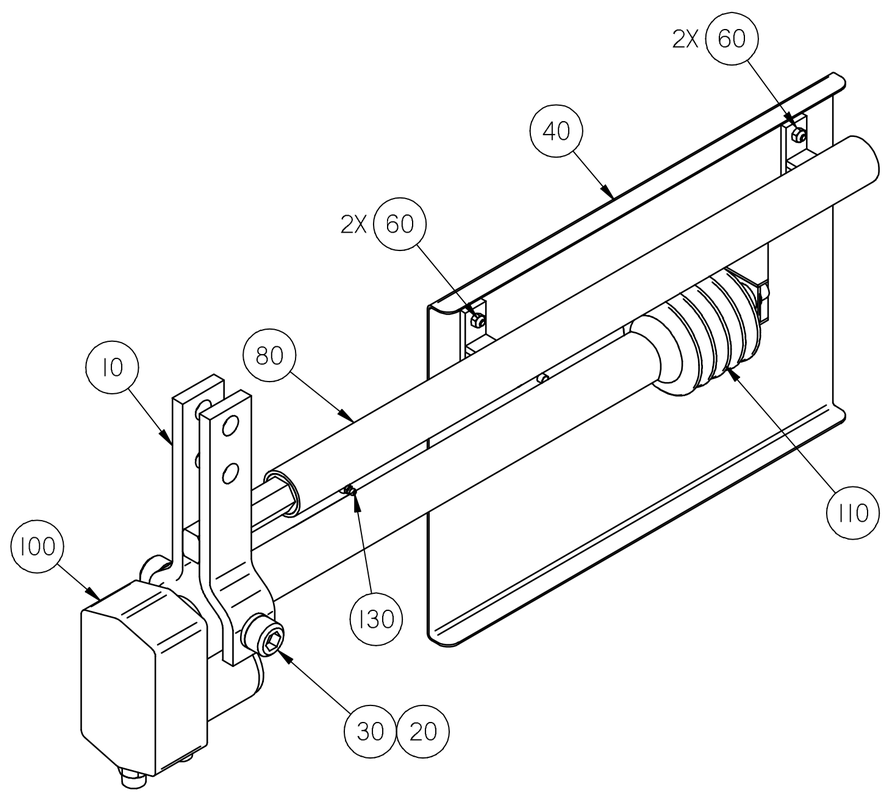

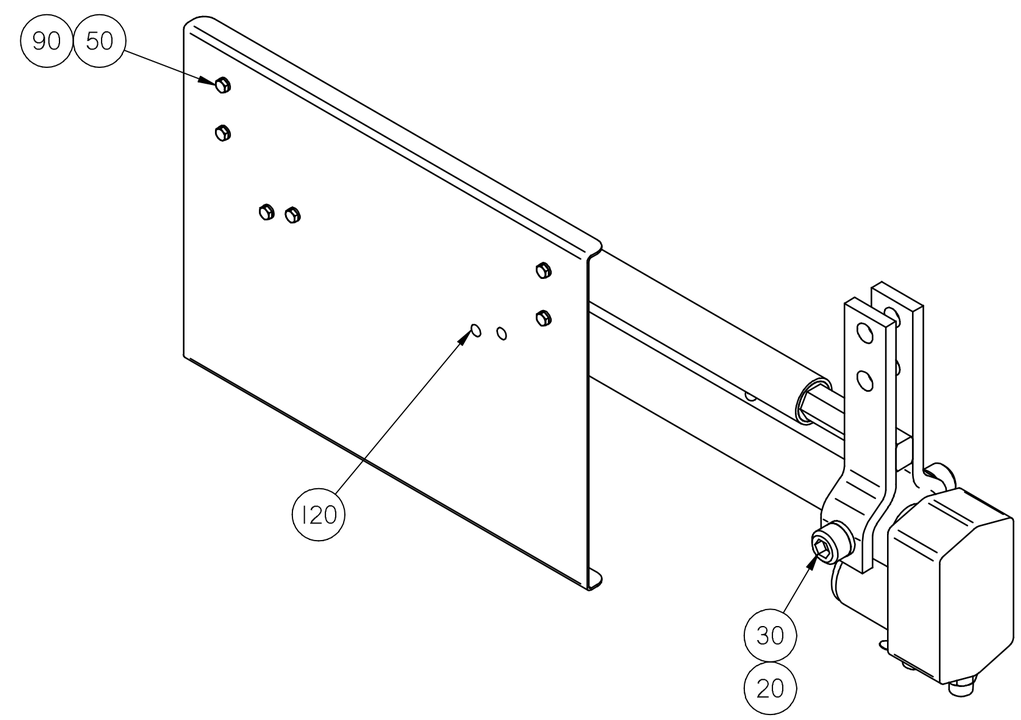

Inch
[mm]

SOLID EDGE DRAWING

CONFIDENTIAL

© COPYRIGHT 2009 HARSCO. THIS DRAWING OR DOCUMENT IS THE PROPERTY OF HARSCO AND EMBODIES CONFIDENTIAL INFORMATION, TRADE SECRET INFORMATION, AND/OR KNOW-HOW THAT IS THE PROPERTY OF HARSCO. BY ACCEPTING THIS DRAWING OR DOCUMENT, THE RECIPIENT AGREES (1) NOT TO PROVIDE, OR OTHERWISE MAKE AVAILABLE, THE DRAWING OR DOCUMENT, OR ANY INFORMATION OR KNOW-HOW EMBODIED THEREIN, TO ANY THIRD PARTY AND (2) NOT TO REPRODUCE OR USE THE DRAWING OR DOCUMENT TO MANUFACTURE ANY APPARATUS OR DEVICE, WITHOUT THE PRIOR WRITTEN AUTHORIZATION OF HARSCO.

IMPLIED TOLERANCES

ALL DIMENSIONS ARE IN INCHES - TOLERANCE UNLESS OTHERWISE SPECIFIED

NOMINAL SIZE RANGE		INCH PLUS OR MINUS		NOMINAL SIZE RANGE		METRIC PLUS OR MINUS	
OVER	TO	2 PLACE DECIMAL	3 PLACE DECIMAL	OVER	TO	1 PLACE DECIMAL	2 PLACE DECIMAL
0	6	.03	.005	0	150	.8	.13
6	24	.04	.008	150	600	1.0	.20
24	-	.06	.010	600	-	1.5	.25

UNLESS OTHERWISE SPECIFIED ALL MACHINED SURFACES WILL HAVE;
A SURFACE FINISH OF 125 MICROINCHES
ANGULAR TOLERANCE OF ± .50°
CONCENTRICITY WITHIN .010

THIRD ANGLE PROJECTION

UNLESS OTHERWISE SPECIFIED, ALL WELDS SHOULD ADHERE TO THE MOST CURRENT A.W.S WELDING STANDARDS

CHANGE	R/L	REVISION	DATE
ECN-106388	C	SE DRAFT VERSION CREATED	09-21-10
EC501827	D	NO CHANGE	08-24-11

Description: FLAG ARM ASSY, LINER RH

Drawing Number: ----------

Machine Type: MARK IV

Model: A0978WAE.asm!MARK IV

Drawn: skumar

Date Drawn: 21 Sep 10

Weight: 56.8 lbm

Scale: 1:4

APVD Desg: BPA

APVD ChEng: HW

Mat'l: ---

HARSCO RAIL

Part Number: A0978WAE

Size: C

Sheet: 1 of 1

Plotted by bpayyadakkath on 8/25/2011 A0978WAE.dft

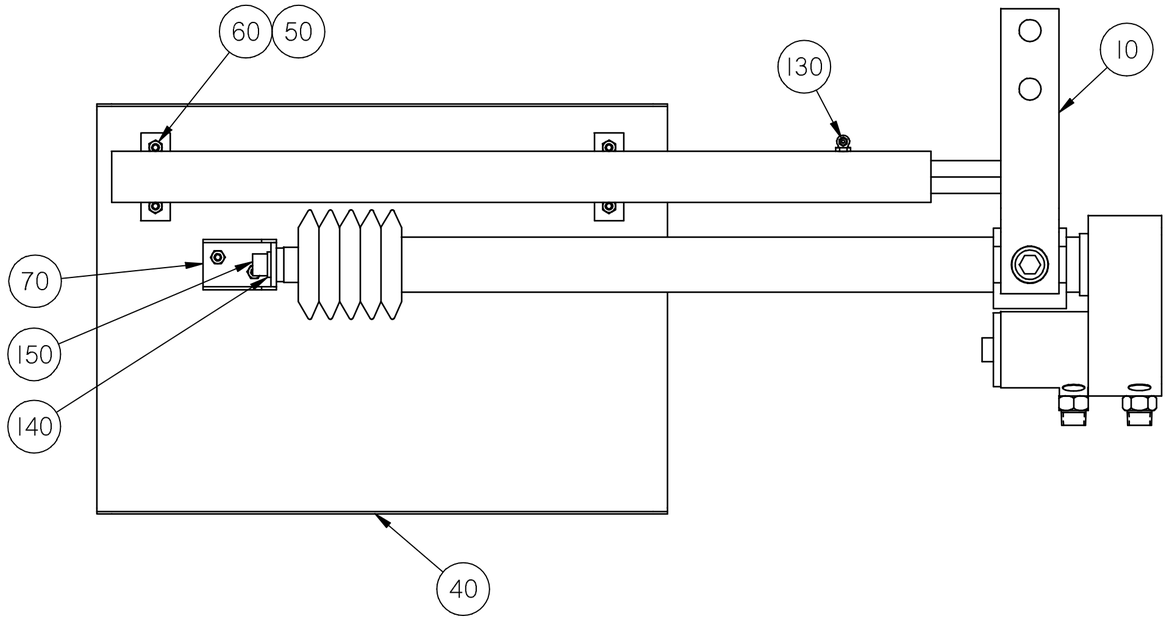

ITEM	PART NO	QTY	DESCRIPTION
10	B4838XAA	1	SUPPORT ARM ASSY
20	F001354	2	DC-SAE RGLR LOCK WASHER 3/4 ZP
30	A0926Y01	2	PIVOT PIN
40	A0900W01	1	FLAG LINER
50	F002355	6	DC-HHD CAP SCR1/4-20X3/4GR5
60	F007022	6	DC-HEX NUT 1/4-20 GR5 ZP
70	A0899YAA	1	BRACKET
80	A9091XAA	1	GUIDE ASSY, FLAG
90	A0061008	6	1/4 MED LOK WSHR
100	C0046XAC	1	LINEAR ACTUATOR ASSEMBLY
110	A7347Y01	1	ACTUATOR BOOT
120	0-3274003-0-09	2	NYLON HOLE PLUG
130	L425183	1	90 DEG. FITTING
140	A0061013	1	1/2 MED LOK WSHR
150	A0041144	1	1/2-20X1 SOC HD CAPSCREW

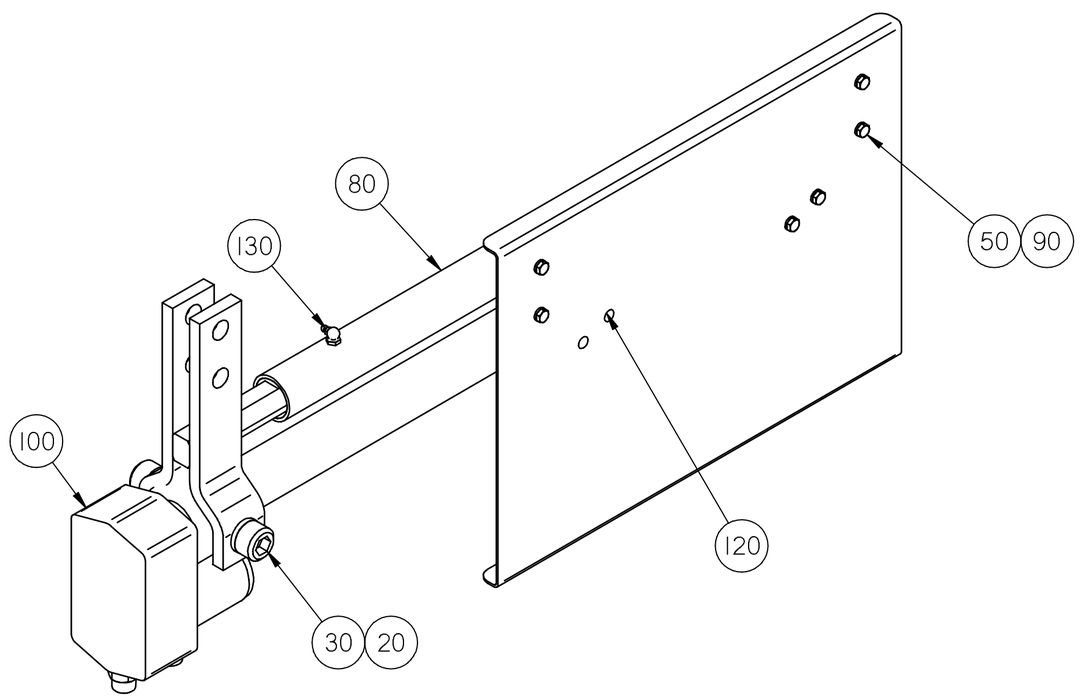

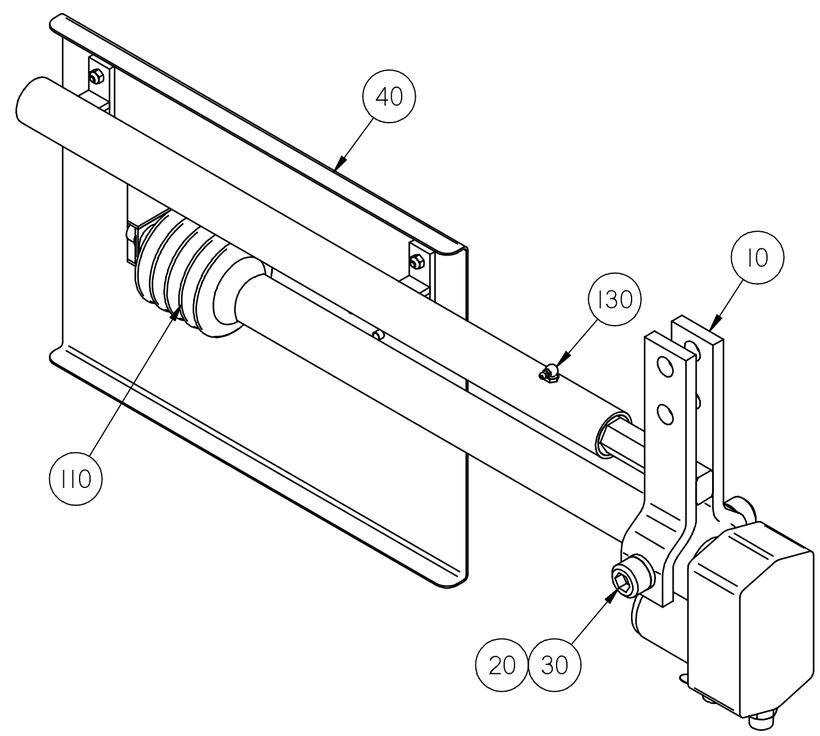

Inch
[mm]

SOLID EDGE DRAWING

CONFIDENTIAL

© COPYRIGHT 2009 HARSCO. THIS DRAWING OR DOCUMENT IS THE PROPERTY OF HARSCO AND EMBODIES CONFIDENTIAL INFORMATION, TRADE SECRET INFORMATION, AND/OR KNOW-HOW THAT IS THE PROPERTY OF HARSCO. BY ACCEPTING THIS DRAWING OR DOCUMENT, THE RECIPIENT AGREES (1) NOT TO PROVIDE, OR OTHERWISE MAKE AVAILABLE, THE DRAWING OR DOCUMENT, OR ANY INFORMATION OR KNOW-HOW EMBODIED THEREIN, TO ANY THIRD PARTY AND (2) NOT TO REPRODUCE OR USE THE DRAWING OR DOCUMENT TO MANUFACTURE ANY APPARATUS OR DEVICE, WITHOUT THE PRIOR WRITTEN AUTHORIZATION OF HARSCO.

IMPLIED TOLERANCES

ALL DIMENSIONS ARE IN INCHES - TOLERANCE UNLESS OTHERWISE SPECIFIED

NOMINAL SIZE RANGE OVER	TO	INCH PLUS OR MINUS 2 PLACE DECIMAL	3 PLACE DECIMAL	NOMINAL SIZE RANGE OVER	TO	METRIC PLUS OR MINUS 1 PLACE DECIMAL	2 PLACE DECIMAL
0	6	.03	.005	0	150	.8	.13
6	24	.04	.008	150	600	1.0	.20
24	-	.06	.010	600	-	1.5	.25

UNLESS OTHERWISE SPECIFIED ALL MACHINED SURFACES WILL HAVE;
A SURFACE FINISH OF 125 MICROINCHES
ANGULAR TOLERANCE OF ±.50°
CONCENTRICITY WITHIN .010

THIRD ANGLE PROJECTION

UNLESS OTHERWISE SPECIFIED, ALL WELDS SHOULD ADHERE TO THE MOST CURRENT A.W.S WELDING STANDARDS

CHANGE	R/L	REVISION	DATE
ECN-106388	D	SE DRAFT VERSION CREATED	09-21-10
EC501827	E	NO CHANGE	08-25-11

Description: FLAG ARM ASSY, LINER LH

Drawing Number: ----------

Machine Type: MARK IV

Model: A0978WAF.asm!MARK IV

Drawn: skumar

Date Drawn: 21 Sep 10

Weight: 60.3 lbm

Scale: 1:4

APVD Desg: BPA

APVD ChEng: HW

Mat'l: -----

HARSCO RAIL

Part Number: A0978WAF

Size: C

Sheet: 1 of 1

Plotted by bpayyadakkath on 8/25/2011 A0978WAF.dft

CONFIDENTIAL
© COPYRIGHT 2009 HARSCO. THIS DRAWING OR DOCUMENT IS THE PROPERTY OF HARSCO AND EMBODIES CONFIDENTIAL INFORMATION, TRADE SECRET INFORMATION, AND/OR KNOW-HOW THAT IS THE PROPERTY OF HARSCO. BY ACCEPTING THIS DRAWING OR DOCUMENT, THE RECIPIENT AGREES (1) NOT TO PROVIDE, OR OTHERWISE MAKE AVAILABLE, THE DRAWING OR DOCUMENT, OR ANY INFORMATION OR KNOW-HOW EMBODIED THEREIN, TO ANY THIRD PARTY AND (2) NOT TO REPRODUCE OR USE THE DRAWING OR DOCUMENT TO MANUFACTURE ANY APPARATUS OR DEVICE, WITHOUT THE PRIOR WRITTEN AUTHORIZATION OF HARSCO.

SOLID EDGE DRAWING

ITEM	PART NO	QTY	DESCRIPTION
10	B8409X02	1	ELECTRIC LINEAR ACTUATOR
20	H5961Y01	1	DECAL DOT MEDIUM YELLOW
30	H5961Y02	1	DECAL DOT LIGHT GRAY
40	0-3250001-0-01	5	TERMINAL LUG
50	185639	2	RECEPTACLE, M12, MALE, 4 PIN

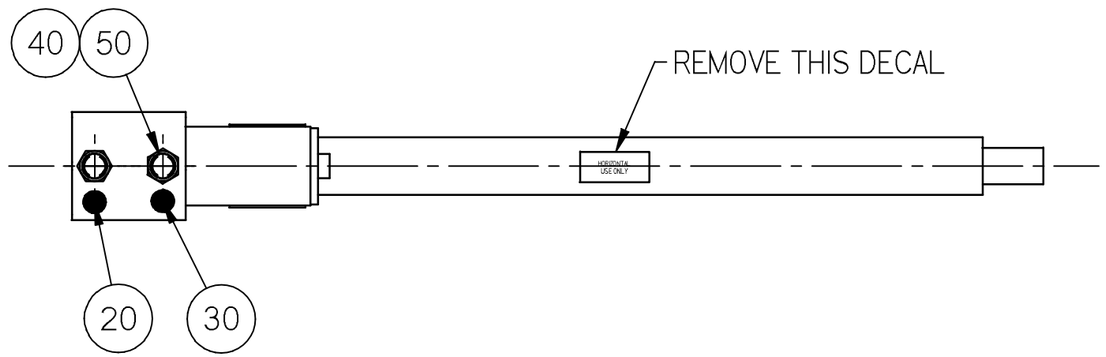

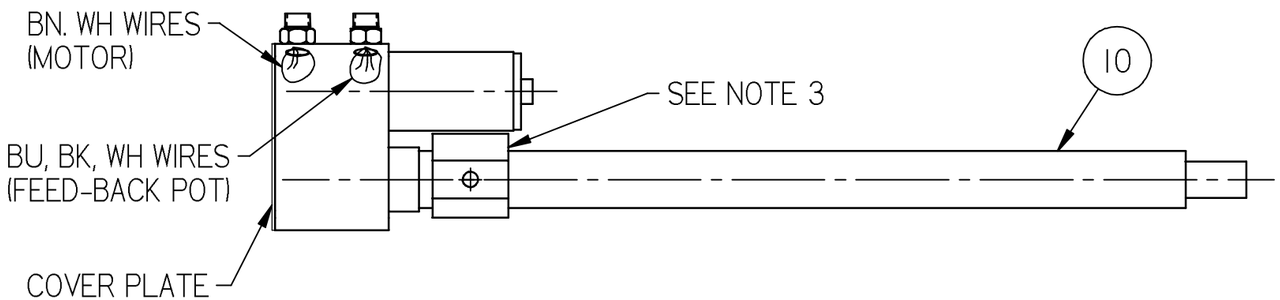

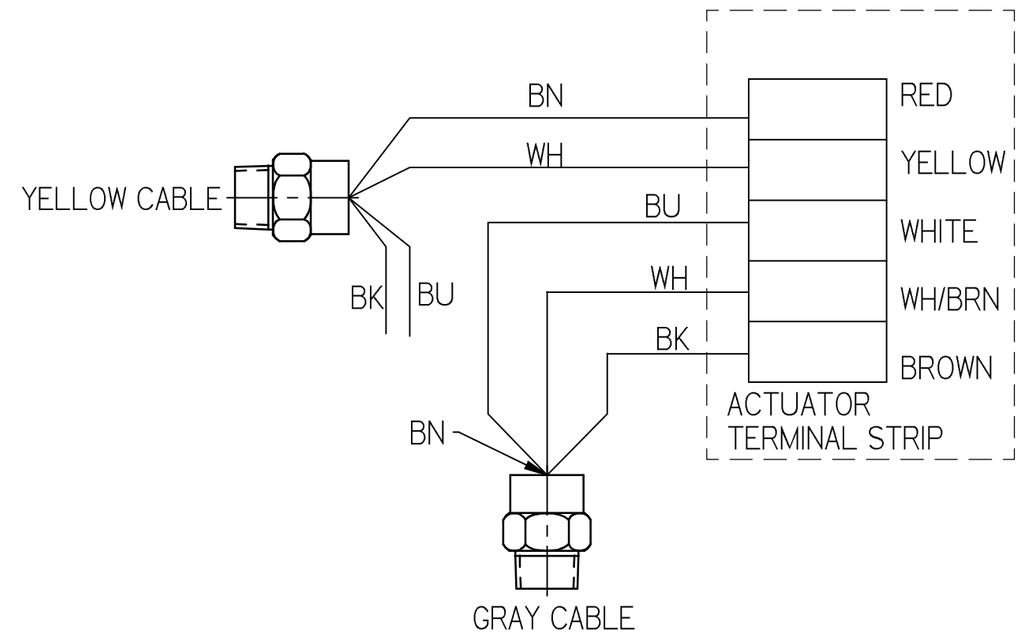

ACTUATOR WIRING

NOTES:

1. CUT OFF EXCESS LENGTH OF WIRE THEN STRIP ENDS 1/4", SOLDER WIRES TO TERMINAL LUGS. TAPE UP UNUSED WIRES.
2. USE BLUE LOCTITE TO SEAL THREADS.
3. APPLY RED LOCTITE, 0-3040000-0-07, TO BARREL AND TIGHTEN INTO ACTUATOR BODY UNTIL A NO LOAD AMP READING OF 2.00 ± .1 AMPS IS ACHIEVED.

Inch
[mm]

IMPLIED TOLERANCES
ALL DIMENSIONS ARE IN INCHES - TOLERANCE UNLESS OTHERWISE SPECIFIED

NOMINAL SIZE RANGE		INCH PLUS OR MINUS		NOMINAL SIZE RANGE		METRIC PLUS OR MINUS	
OVER	TO	2 PLACE DECIMAL	3 PLACE DECIMAL	OVER	TO	1 PLACE DECIMAL	2 PLACE DECIMAL
0	6	.03	.005	0	150	.8	.13
6	24	.04	.008	150	600	1.0	.20
24	-	.06	.010	600	-	1.5	.25

UNLESS OTHERWISE SPECIFIED, ALL MACHINED SURFACES WILL HAVE:
A SURFACE FINISH OF 125 MICROINCHES
ANGULAR TOLERANCE OF ±.50°
CONCENTRICITY WITHIN .010

THIRD ANGLE PROJECTION

UNLESS OTHERWISE SPECIFIED, ALL WELDS SHOULD ADHERE TO THE MOST CURRENT A.W.S WELDING STANDARDS

CHANGE	R/L	REVISION	DATE
ECN-106388	D	SE DRAFT VERSION CREATED	10-27-10

Description: LINEAR ACTUATOR ASSY
Drawing Number: ----------
Machine Type: MARK IV
Model: C0046XAC.asm
Drawn: skumar
Date Drawn: 27 Oct 10
Weight: 23.9 lbm
Scale: 1:5
APVD Desg: BPA
APVD ChEng: HW
Mat'l: ----

HARSCO RAIL

Part Number: C0046XAC
Size: B
Sheet: 1 of 1

Plotted by skumar on 3/18/2011 C0046XAC.dft

B8409X02 ELECTRIC ACTUATOR
REPAIR PARTS

FOR
C0046XAB ACTUATOR ASSEMBLY
C0046XAC ACTUATOR ASSEMBLY

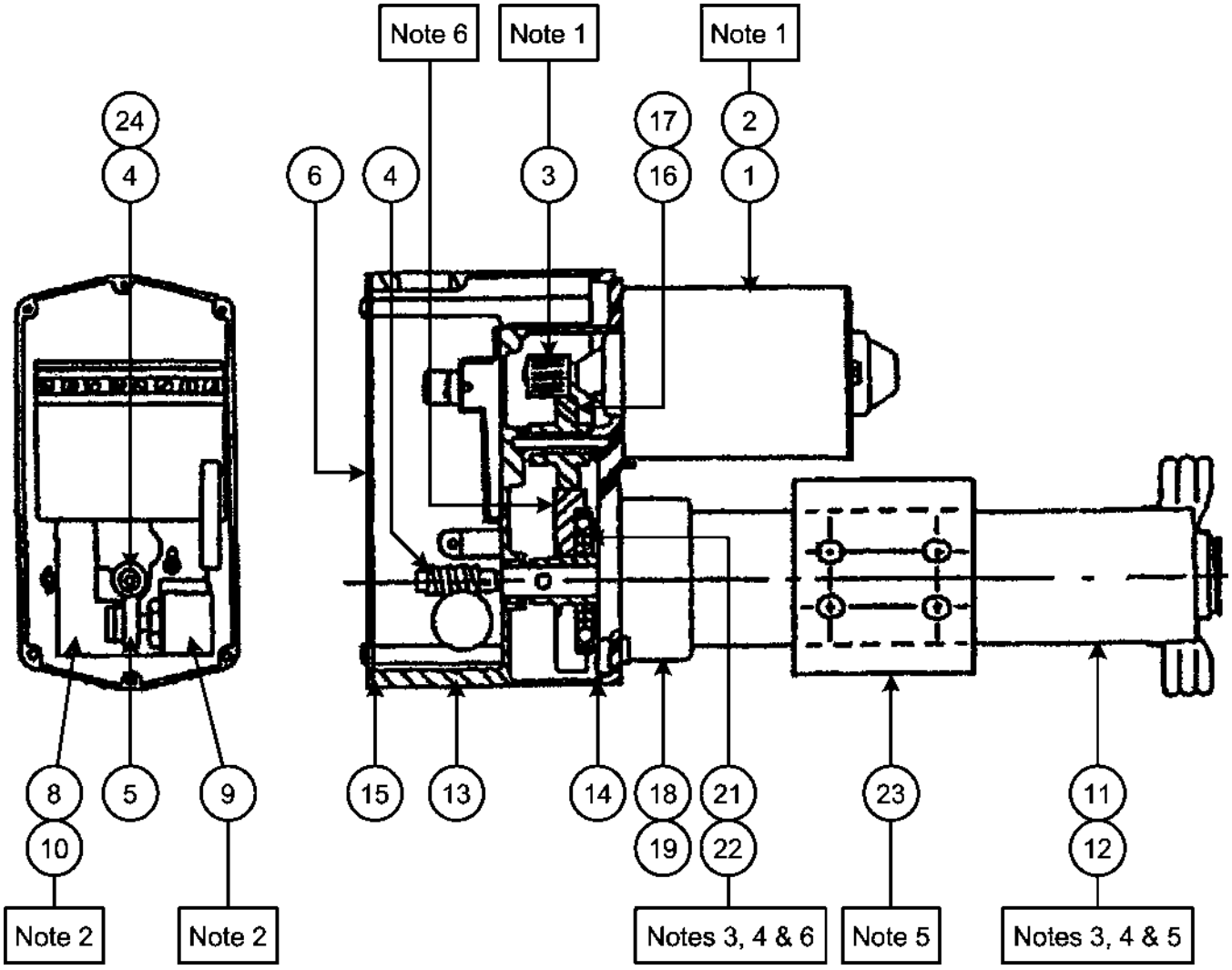

Notes:
1. Item 3 is Included in Items 1 and 2.
2. Items 8 and 9 are included in Item 10.
3. Item 21 is Included in Item 11.
4. Item 22 is Included in Item 12,
5. Item 23 is Not Included in Items 11 and 12.
6. Item 21 and 22 Clutch Assemblies Include Gear.

B8409X02 ELECTRIC ACTUATOR
REPAIR PARTS

FOR
C0046XAB ACTUATOR ASSEMBLY
C0046XAC ACTUATOR ASSEMBLY

ITEM	PART NO	DESCRIPTION	QTY
	C0046XAB	Complete Actuator Assembly	1
	C0046XAC	Complete Actuator Assembly	1
	B8409X02	Actuator Assembly for C0046XAB or C0046XAC	1
1	B8904Y01	36 VDC Motor for C0046XAB	1
2	B8904Y02	36 VDC Motor for C0046XAC	1
3	B8904Y03	Motor Gear	1
4	B8904Y04	Potentiometer Worm Gear	1
5	B8904Y05	Potentiometer Gear	1
6	B8904Y06	Cover	1
7	B8904Y07	Rod End	1
8	B8904Y08	Potentiometer Bracket	1
9	B8904Y09	Potentiometer with Lead Wires and Lugs	1
10	B8904Y10	Potentiometer with Bracket, Terminals, Wire	1
13	B8904Y13	Main Housing	1
14	B8904Y14	Front Gasket - Motor End	1
15	B8904Y15	Rear Gasket - Cover End	1
16	B8904Y16	Intermediate Gear Assembly for C0046XAC	1
17	B8904Y17	Intermediate Gear Assembly for C0046XAB	1
18	B8904Y18	Front Housing Assembly for C0046XAC	1
19	B8904Y19	Front Housing Assembly for C0046XAB	1
20	A7347Y01	Dust Cover	1
21	B8904Y21	Clutch Assembly for C0046XAB	1
22	B8904Y22	Clutch Assembly for C0046XAC	1
23	B8904Y23	Adaptor	1
24	L421297	Retaining Ring External	1

CONFIDENTIAL
© COPYRIGHT 2009 HARSCO. THIS DRAWING OR DOCUMENT IS THE PROPERTY OF HARSCO AND EMBODIES CONFIDENTIAL INFORMATION, TRADE SECRET INFORMATION, AND/OR KNOW-HOW THAT IS THE PROPERTY OF HARSCO. BY ACCEPTING THIS DRAWING OR DOCUMENT, THE RECIPIENT AGREES (1) NOT TO PROVIDE, OR OTHERWISE MAKE AVAILABLE, THE DRAWING OR DOCUMENT, OR ANY INFORMATION OR KNOW-HOW EMBODIED THEREIN, TO ANY THIRD PARTY AND (2) NOT TO REPRODUCE OR USE THE DRAWING OR DOCUMENT TO MANUFACTURE ANY APPARATUS OR DEVICE, WITHOUT THE PRIOR WRITTEN AUTHORIZATION OF HARSCO.

SOLID EDGE DRAWING

ITEM	PART NO	QTY	DESCRIPTION
10	G5869Y01	1	AIR CYLINDER 3" BORE
20	0-3652049-0-01	1	FEMALE ROD END
30	0-3652053-0-07	1	MALE ROD END
40	F011937	2	DC-ELB90 4X4NPT
50	F011079	2	DC-STR 6NPTX4FPT
60	F014212	1	DC-HEX JAM NUT 5/8-18 GR2 ZP *

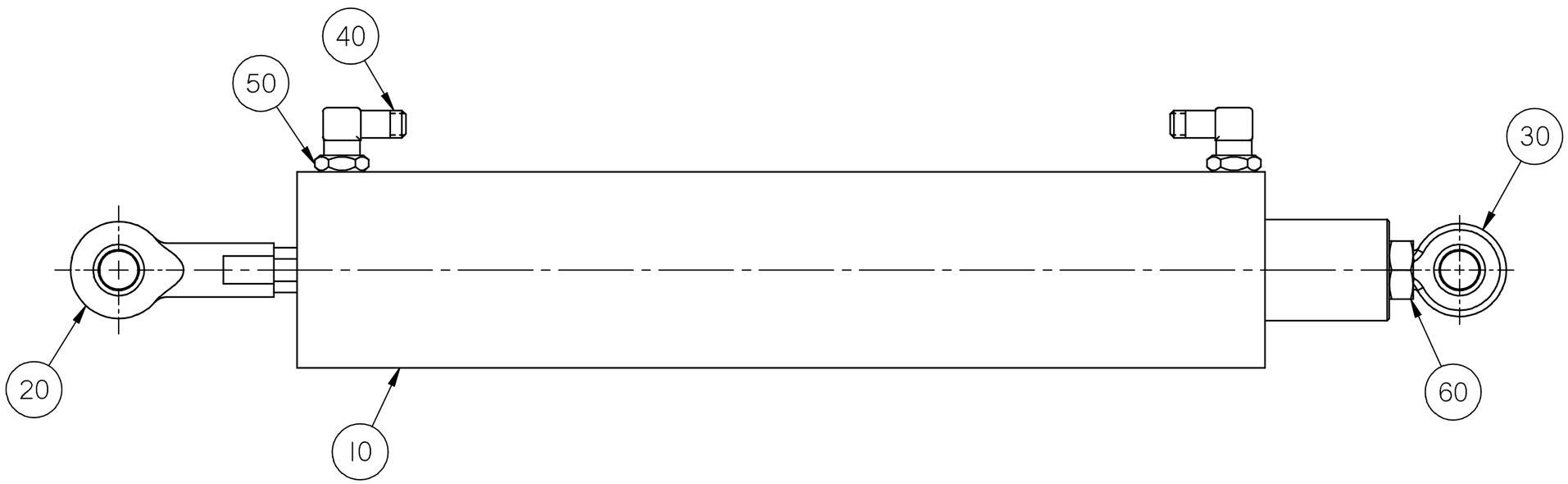

NOTE:

APPLY LOCTITE 242 TO THREADS ON CYLINDER ROD END AND MALE ROD END, ITEM 30.

Inch
[mm]

IMPLIED TOLERANCES
ALL DIMENSIONS ARE IN INCHES - TOLERANCE UNLESS OTHERWISE SPECIFIED

NOMINAL SIZE RANGE		INCH PLUS OR MINUS		NOMINAL SIZE RANGE		METRIC PLUS OR MINUS	
OVER	TO	2 PLACE DECIMAL	3 PLACE DECIMAL	OVER	TO	1 PLACE DECIMAL	2 PLACE DECIMAL
0	6	.03	.005	0	150	.8	.13
6	24	.04	.008	150	600	1.0	.20
24	-	.06	.010	600	-	1.5	.25

UNLESS OTHERWISE SPECIFIED, ALL MACHINED SURFACES WILL HAVE:
A SURFACE FINISH OF 125 MICROINCHES
ANGULAR TOLERANCE OF ± .50°
CONCENTRICITY WITHIN .010

THIRD ANGLE PROJECTION

UNLESS OTHERWISE SPECIFIED, ALL WELDS SHOULD ADHERE TO THE MOST CURRENT A.W.S WELDING STANDARDS

CHANGE	R/L	REVISION	DATE
ECN-106388	E	SE DRAFT VERSION CREATED	10-21-10

Description: AIR CYLINDER ASSEMBLY
Drawing Number: ----------
Machine Type: MARK IV
Model: 0-2303635-0-06.asm
Drawn: skumar
Date Drawn: 21 Oct 10
Weight: 39.76 lbm
Scale: 1:2
APVD Desg: BPA
APVD ChEng: HW
Mat'l: ----

HARSCO RAIL

Part Number: 0-2303635-0-06
Size: B
Sheet: 1 of 1

Plotted by skumar on 3/17/2011 0-2303635-0-06.dft

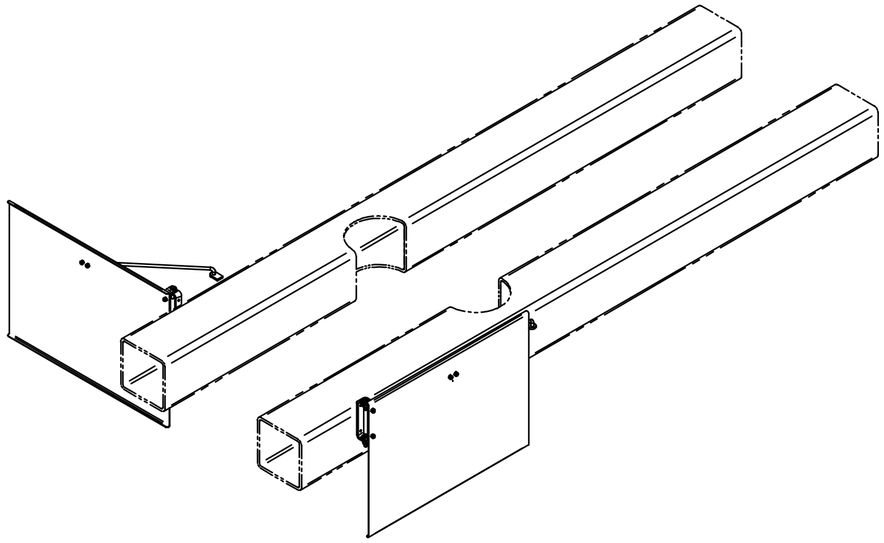

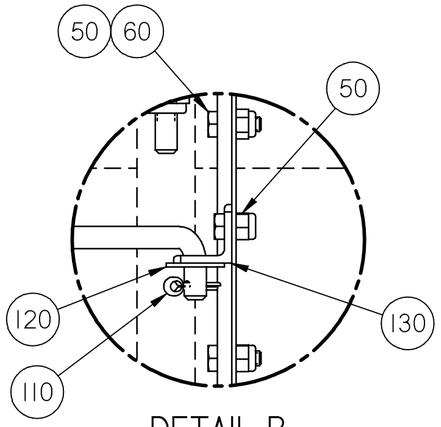

DETAIL B

ITEM	PART NO	QTY	DESCRIPTION
10	A8786X03	2	LIGHT SHIELD
20	Z768505-001	2	ROD
30	A7765X01	2	HINGE BRACKET
40	F003085	4	DC-HHDC SCR1/4-20X1/2 GR5
50	L41173	8	1/4-20 ESNA NUT
60	F002355	4	DC-HHD CAP SCR1/4-20X3/4GR5
70	A0036066	4	3/8-16 X 1 1/2 HH CAPSCREW
80	L40387	4	NUT ELASTIC STOP
110	A0068046	2	1/8X3/4 COTTER PIN
120	A0059003	2	3/8 REG PL WSHR
130	Z686257	2	ANGLE BRKT

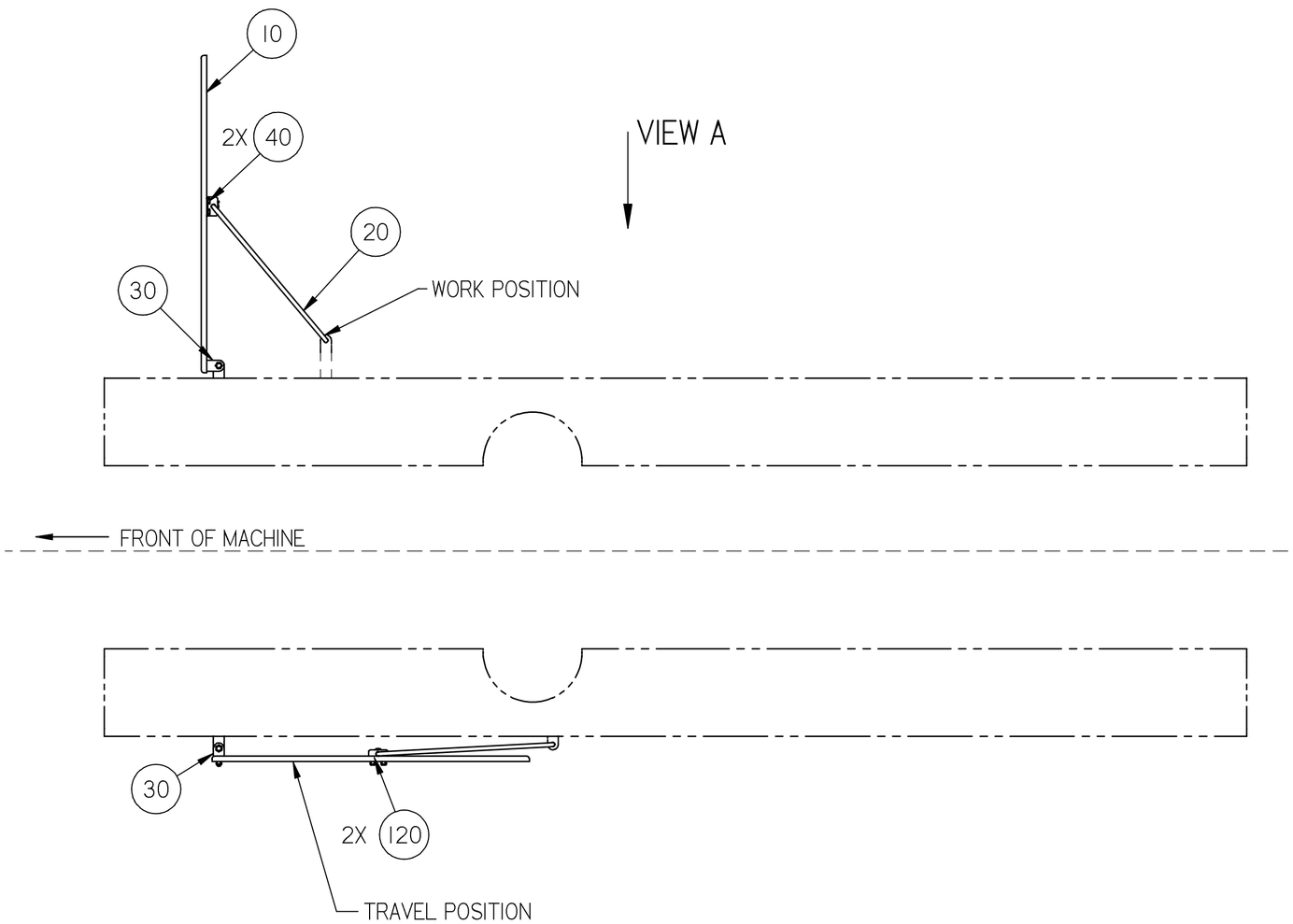

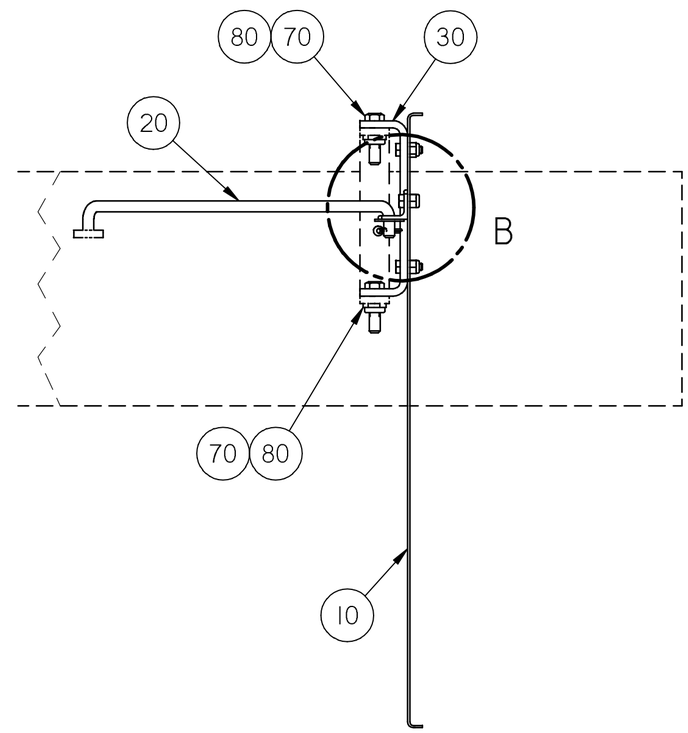

VIEW A

Inch
[mm]

SOLID EDGE DRAWING

CONFIDENTIAL

© COPYRIGHT 2009 HARSCO. THIS DRAWING OR DOCUMENT IS THE PROPERTY OF HARSCO AND EMBODIES CONFIDENTIAL INFORMATION, TRADE SECRET INFORMATION, AND/OR KNOW-HOW THAT IS THE PROPERTY OF HARSCO. BY ACCEPTING THIS DRAWING OR DOCUMENT, THE RECIPIENT AGREES (1) NOT TO PROVIDE, OR OTHERWISE MAKE AVAILABLE, THE DRAWING OR DOCUMENT, OR ANY INFORMATION OR KNOW-HOW EMBODIED THEREIN, TO ANY THIRD PARTY AND (2) NOT TO REPRODUCE OR USE THE DRAWING OR DOCUMENT TO MANUFACTURE ANY APPARATUS OR DEVICE, WITHOUT THE PRIOR WRITTEN AUTHORIZATION OF HARSCO.

IMPLIED TOLERANCES

ALL DIMENSIONS ARE IN INCHES - TOLERANCE UNLESS OTHERWISE SPECIFIED

NOMINAL SIZE RANGE OVER	TO	INCH PLUS OR MINUS 2 PLACE DECIMAL	3 PLACE DECIMAL	NOMINAL SIZE RANGE OVER	TO	METRIC PLUS OR MINUS 1 PLACE DECIMAL	2 PLACE DECIMAL
0	6	.03	.005	0	150	.8	.13
6	24	.04	.008	150	600	1.0	.20
24	-	.06	.010	600	-	1.5	.25

UNLESS OTHERWISE SPECIFIED ALL MACHINED SURFACES WILL HAVE;
A SURFACE FINISH OF 125 MICROINCHES
ANGULAR TOLERANCE OF ± .50°
CONCENTRICITY WITHIN .010

THIRD ANGLE PROJECTION

UNLESS OTHERWISE SPECIFIED, ALL WELDS SHOULD ADHERE TO THE MOST CURRENT A.W.S WELDING STANDARDS

CHANGE	R/L	REVISION	DATE
ECN-106568	C	SE DRAFT VERSION CREATED	10-26-10

Description: LIGHT SHIELDS INSTL

Drawing Number: ----------

Machine Type: MARK IV

Model: A7762WAC.asm!Member1

Drawn: skumar

Date Drawn: 26 Oct 10

Weight: 30.4 lbm

Scale: 1:10

APVD Desg: BPA

APVD ChEng: HW

Mat'l: ----

HARSCO RAIL

Part Number: A7762WAC

Size: C

Sheet: 1 of 1

Plotted by skumar on 3/22/2011 A7762WAC.dft

ITEM	PART NO	QTY	DESCRIPTION
10	G9427WAG	1	CARRIAGE & WHEEL ASSY
20	Z683672	2	SPRING SHOE TENSION
30	0-3015002-0-13	1	CLEVIS PIN
40	F001753	2	DC-WROUGHT WAHER 3/4 ZP
50	F001182	1	DC-1/8 X 1 1/4 COTTER PIN *
60	Z752500-041	1	5/8 - 6 SHOULDER BOLT
70	L41523	1	NUT
80	A1901YAA	1	CYLINDER ASSY

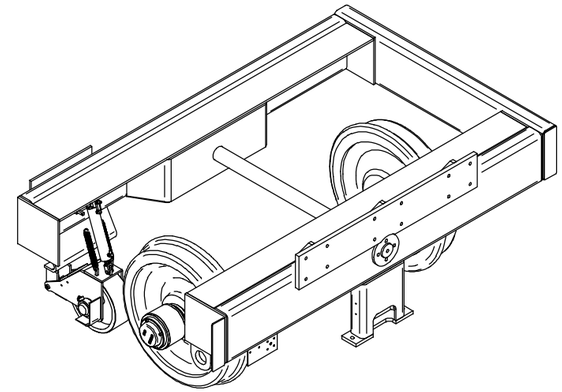

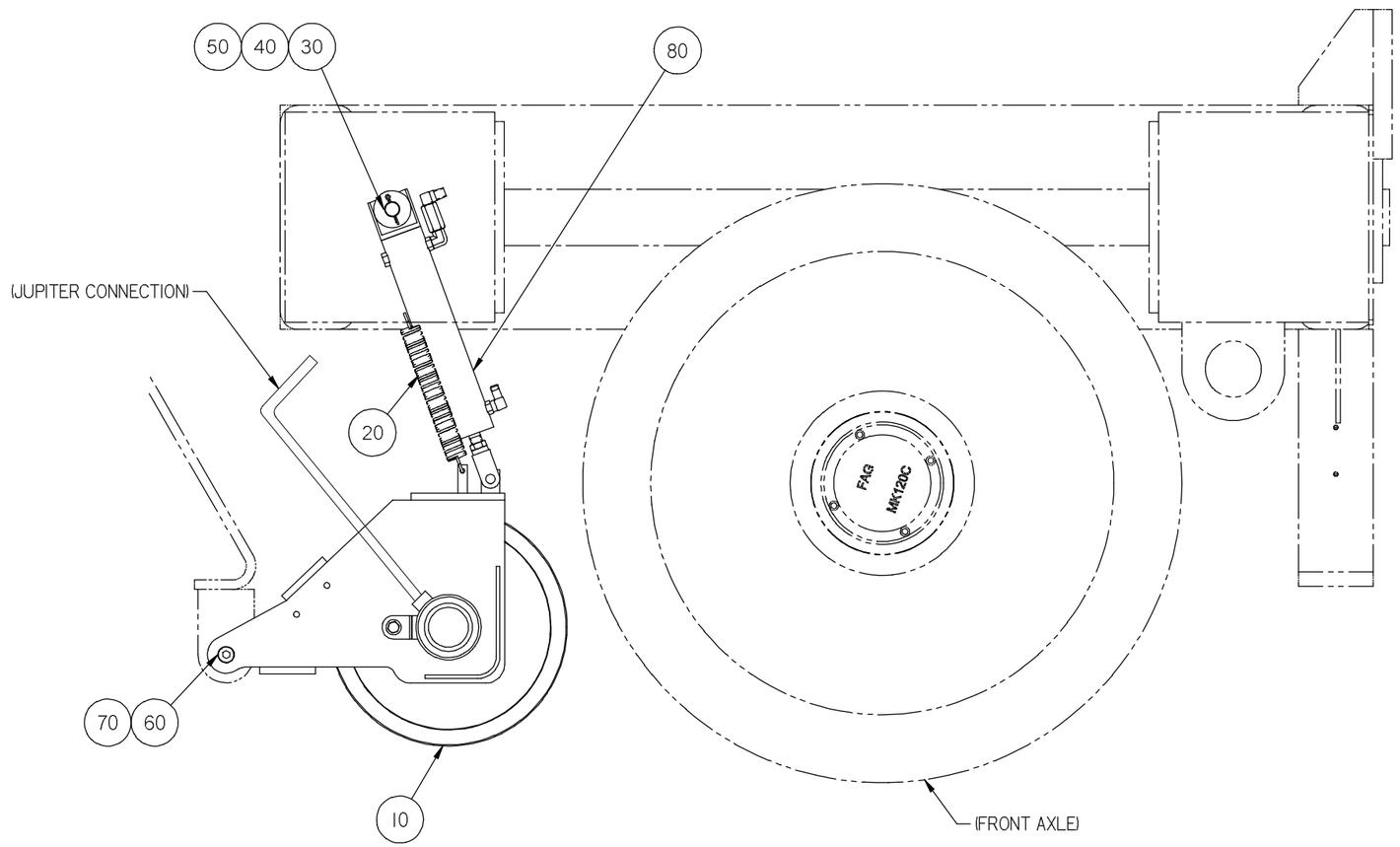

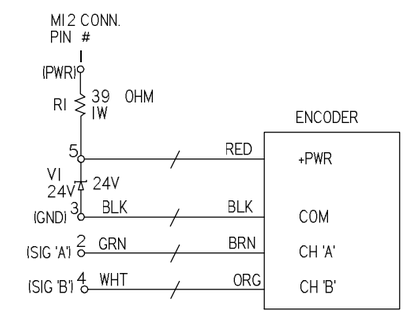

Inch
[mm]

CONFIDENTIAL
© COPYRIGHT 2011 HARSCO. THIS DRAWING OR DOCUMENT IS THE PROPERTY OF HARSCO AND EMBODIES CONFIDENTIAL INFORMATION, TRADE SECRET INFORMATION, AND/OR KNOW-HOW THAT IS THE PROPERTY OF HARSCO. BY ACCEPTING THIS DRAWING OR DOCUMENT, THE RECIPIENT AGREES (1) NOT TO PROVIDE, OR OTHERWISE MAKE AVAILABLE, THE DRAWING OR DOCUMENT, OR ANY INFORMATION OR KNOW-HOW EMBODIED THEREIN, TO ANY THIRD PARTY AND (2) NOT TO REPRODUCE OR USE THE DRAWING OR DOCUMENT TO MANUFACTURE ANY APPARATUS OR DEVICE, WITHOUT THE PRIOR WRITTEN AUTHORIZATION OF HARSCO.

NOMINAL SIZE RANGE OVER	TO	INCH PLUS OR MINUS 2 PLACE DECIMAL	3 PLACE DECIMAL	NOMINAL SIZE RANGE OVER	TO	METRIC PLUS OR MINUS 1 PLACE DECIMAL	2 PLACE DECIMAL
0	6	.03	.005	0	150	.5	.13
6	24	.04	.008	150	600	1.0	.20
24	-	.06	.010	600	-	1.5	.25

UNLESS OTHERWISE SPECIFIED ALL MACHINED SURFACES WILL HAVE; A SURFACE FINISH OF 125 MICROINCHES ANGULAR TOLERANCE OF ± .87 CONCENTRICITY WITHIN .010

THIRD ANGLE PROJECTION

UNLESS OTHERWISE SPECIFIED, ALL WELDS SHOULD ADHERE TO THE MOST CURRENT A.W.S WELDING STANDARDS

CHANGE	R/L	REVISION	DR	DATE
EC500910	B	SE DRAFT VERSION CREATED	SRK	05-31-11

Description: ENCODER WHEEL INSTL

HARSCO RAIL

Material: —; —

Machine Type: MARK IV

Size: D

Weight: 2317.2 lbm

Drawn: skumar

Date Drawn: 5/31/2011

Part Number: G9426WAG

Sheet: 1 of 1

SOLID EDGE DRAWING

DO NOT SCALE

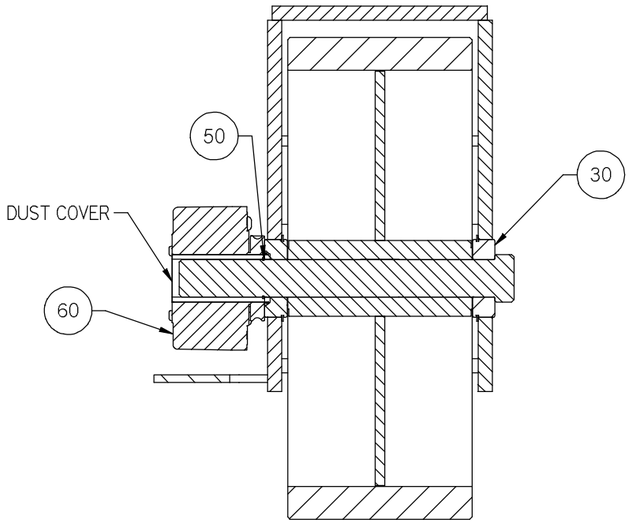

SECTION A-A

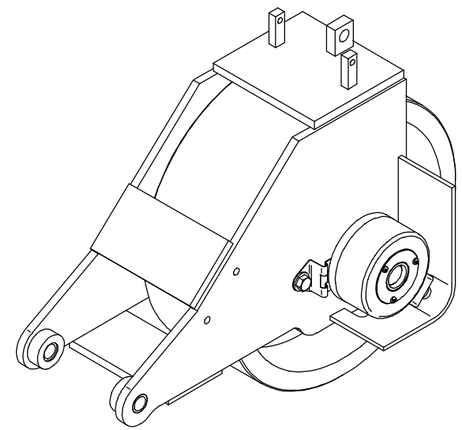

ITEM	PART NO	QTY	DESCRIPTION
10	C0729WAB	1	WHEEL CARRIAGE WELDMENT
20	B0356WAA	1	WHEEL
30	L422822	2	SNAP RING TYPE BALL BEAR
40	G9428Y01	1	ENCODER WHEEL AXLE
50	L40456	1	RETAINING RING
60	5004402	1	ENCODER, 50PPR, M12
70	Z9668AR	1	KEY
80	L422823	2	PLAIN BEARING
90	H4938Y01	1	ENCODER KEY
100	F009681	1	SAE WASHER 3/8 ZP
110	F002887	1	DC-HHD CAP SCR3/8-16X3/4GR5
120	F020984	4	CABLE TIE MOUNT
130	F012914	4	DC-RD HD MS #6-32X3/4 ZP
140	L420492	4	STANDARD TIE

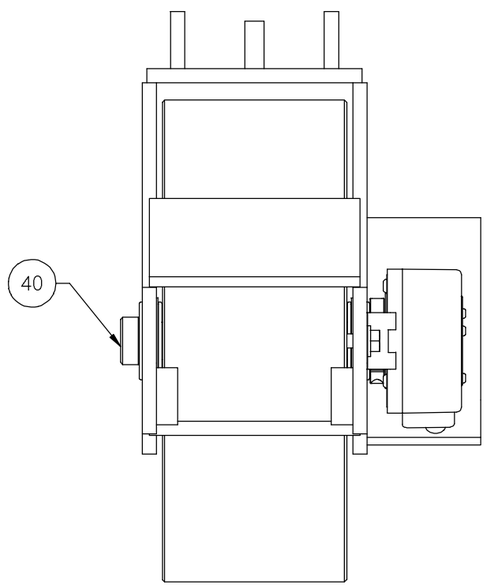

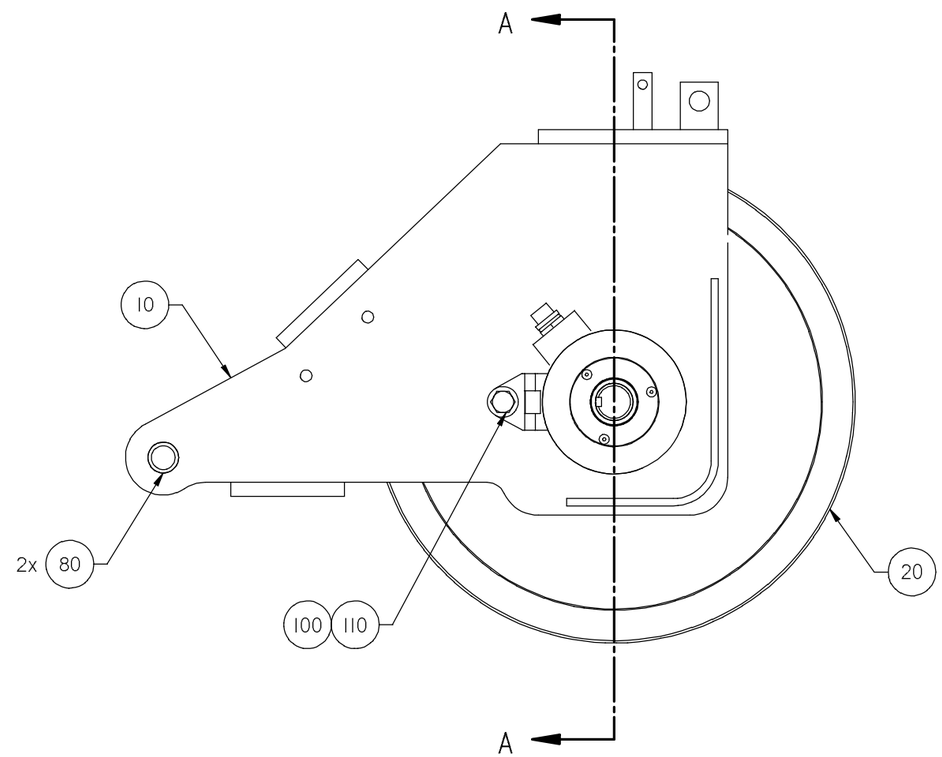

Inch
[mm]

CONFIDENTIAL
© COPYRIGHT 2011 HARSCO. THIS DRAWING OR DOCUMENT IS THE PROPERTY OF HARSCO AND EMBODIES CONFIDENTIAL INFORMATION, TRADE SECRET INFORMATION, AND/OR KNOW-HOW THAT IS THE PROPERTY OF HARSCO. BY ACCEPTING THIS DRAWING OR DOCUMENT, THE RECIPIENT AGREES (1) NOT TO PROVIDE, OR OTHERWISE MAKE AVAILABLE, THE DRAWING OR DOCUMENT, OR ANY INFORMATION OR KNOW-HOW EMBODIED THEREIN, TO ANY THIRD PARTY AND (2) NOT TO REPRODUCE OR USE THE DRAWING OR DOCUMENT TO MANUFACTURE ANY APPARATUS OR DEVICE, WITHOUT THE PRIOR WRITTEN AUTHORIZATION OF HARSCO.

NOMINAL SIZE RANGE OVER	TO	INCH PLUS OR MINUS 2 PLACE DECIMAL	3 PLACE DECIMAL
0	6	.03	.005
6	24	.04	.008
24	-	.06	.010

NOMINAL SIZE RANGE OVER	TO	METRIC PLUS OR MINUS 1 PLACE DECIMAL	2 PLACE DECIMAL
0	150	.5	.13
150	600	1.0	.20
600	-	1.5	.25

UNLESS OTHERWISE SPECIFIED ALL MACHINED SURFACES WILL HAVE;
A SURFACE FINISH OF 125 MICROINCHES
ANGULAR TOLERANCE OF ± .02°
CONCENTRICITY WITHIN .010

THIRD ANGLE PROJECTION

UNLESS OTHERWISE SPECIFIED, ALL WELDS SHOULD ADHERE TO THE MOST CURRENT AWS WELDING STANDARDS

CHANGE	R/L	REVISION	DR	DATE
EC500910	C	SE DRAFT VERSION CREATED	SRK	05-10-11
EC502165	D	PART 5004402 WAS 2006977	BPA	10-12-11

Description: CARRIAGE & WHEEL ASSY

HARSCO RAIL

Material: -; -
Machine Type: MARK IV
Size: D
Weight: 92.7 lbm
Drawn: skumar
Date Drawn: 5/10/11
Part Number: G9427WAG
Sheet: 1 of 2

SOLID EDGE DRAWING
DO NOT SCALE

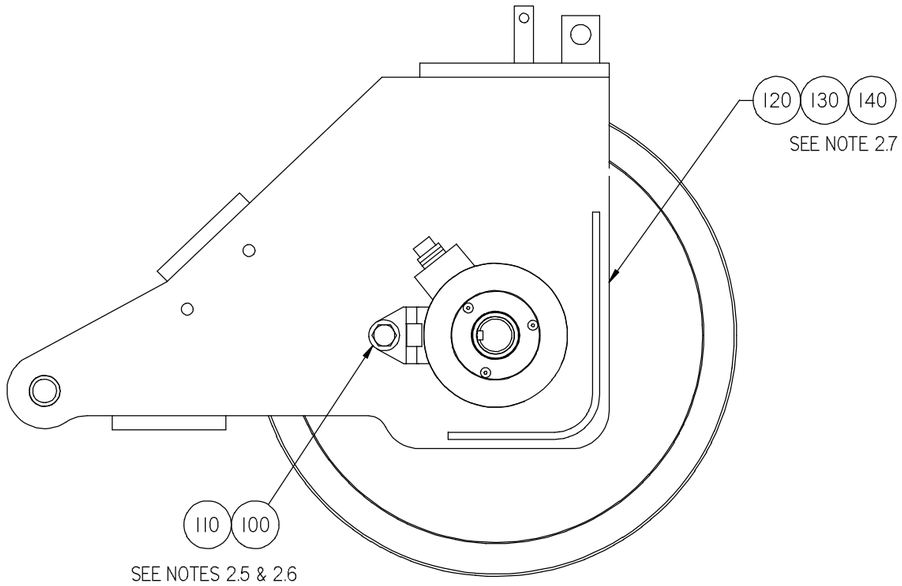

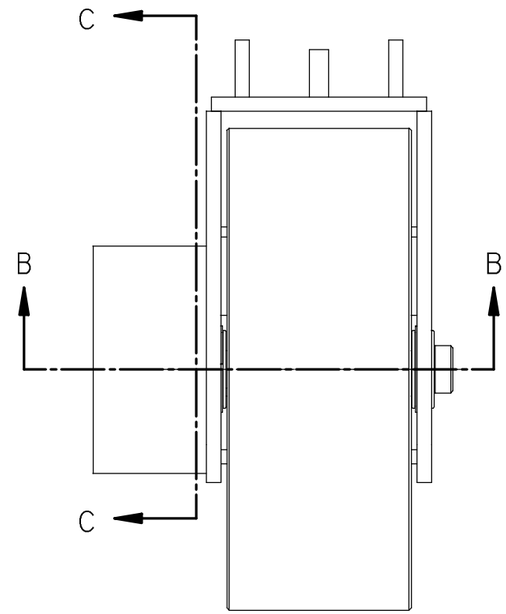

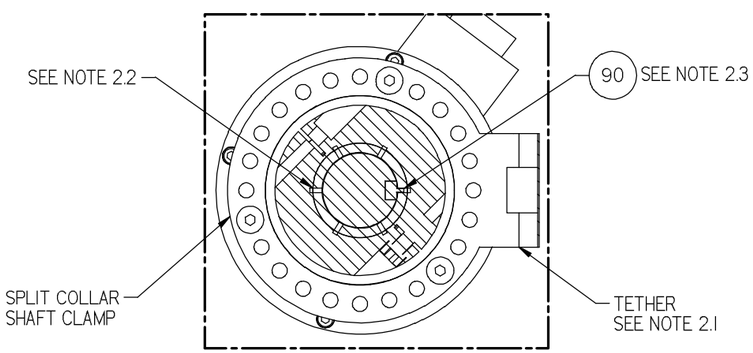

SECTION C-C

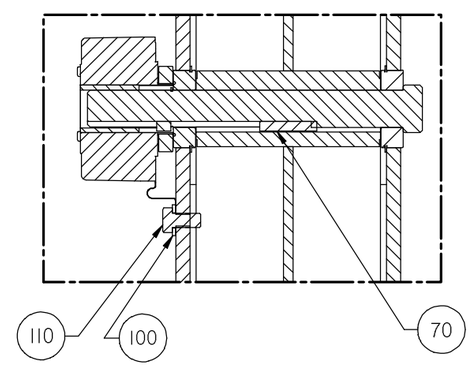

SECTION B-B

NOTES:

2.1. INSTALL THE TETHER ON THE ENCODER SO THAT CABLE CONNECTOR WILL BE LOCATED AS SHOWN.

2.2. THE SPLIT COLLAR SHAFT CLAMP CAN BE TAKEN OFF AND RORATED IN 90° INCREMENTS TO MAKE THE CLAMP SCREW EASIER TO ACCESS.

2.3. INSTALL ENCODER KEY, IT-90, IN SHAFT KEYWAY. IT-40, (IT MAY BE NECESSARY TO TAP IT IN WITH A PLASTIC HAMMER). THE END OF THE KEY, IT-90, SHOULD JUST BE TOUCHING THE SNAP RING, IT-50.

2.4. SLIDE THE ENCODER ON THE SHAFT, ALIGINING THE TONGUE ON THE KEY, IT-90, WITH ONE OF THE SLOTS IN THE ENCODER HOLLOW SHAFT. THEN APPLY LOCTITE 242 THREADLOCKER TO COLLAR SCREW AND TIGHTEN.

2.5. APPLY LOCTITE 242 THREADLOCKE & TIGHTEN TETHER BOLT 125 TO 150 IN LB.

2.6. TETHER SHOULD MOUNT FLAT AGAINST THE WHEEL CARRIER - SO THAT IT IS NOT BENT, STRETCHED OR TWISTED. REINSTALL IF NECESSARY.

2.7. WHEN SECURING CABLE, MAKE SURE THAT LOOPS ARE ROUTED IN SUCH A WAY THAT THEY WILL NOT GET SNAGGED BY WHEEL.

Inch
[mm]

CONFIDENTIAL
© COPYRIGHT 2011 HARSCO. THIS DRAWING OR DOCUMENT IS THE PROPERTY OF HARSCO AND EMBODIES CONFIDENTIAL INFORMATION, TRADE SECRET INFORMATION, AND/OR KNOW-HOW THAT IS THE PROPERTY OF HARSCO. BY ACCEPTING THIS DRAWING OR DOCUMENT, THE RECIPIENT AGREES (1) NOT TO PROVIDE, OR OTHERWISE MAKE AVAILABLE, THE DRAWING OR DOCUMENT, OR ANY INFORMATION OR KNOW-HOW EMBODIED THEREIN, TO ANY THIRD PARTY AND (2) NOT TO REPRODUCE OR USE THE DRAWING OR DOCUMENT TO MANUFACTURE ANY APPARATUS OR DEVICE, WITHOUT THE PRIOR WRITTEN AUTHORIZATION OF HARSCO.

NOMINAL SIZE RANGE		INCH PLUS OR MINUS	
OVER	TO	3 PLACE DECIMAL	2 PLACE DECIMAL
0	6	.03	.005
6	24	.04	.008
24	-	.06	.010

NOMINAL SIZE RANGE		METRIC PLUS OR MINUS	
OVER	TO	1 PLACE DECIMAL	2 PLACE DECIMAL
0	150	.8	.13
150	600	1.0	.20
600	-	1.5	.25

UNLESS OTHERWISE SPECIFIED ALL MACHINED SURFACES WILL HAVE:
A SURFACE FINISH OF 125 MICROINCHES
ANGULAR TOLERANCE OF ± .05°
CONCENTRICITY WITHIN .010

THIRD ANGLE PROJECTION

UNLESS OTHERWISE SPECIFIED, ALL WELDS SHOULD ADHERE TO THE MOST CURRENT AWS WELDING STANDARDS

CHANGE	R/L	REVISION	DR	DATE
EC500910	C	SE DRAFT VERSION CREATED	SRK	05-10-11
EC502165	D	PART 5004402 WAS 2006977	BPA	10-12-11

Description: CARRIAGE & WHEEL ASSY

HARSCO RAIL

Material: -; -
Machine Type: MARK IV
Size: D
Weight: 92.7 lbm
Drawn: skumar
Date Drawn: 5/10/11
Part Number: G9427WAG
Sheet: 2 of 2

SOLID EDGE DRAWING
DO NOT SCALE

ITEM	PART NO	QTY	DESCRIPTION
10	0-3470007-0-01	1	AIR CYL
20	0-1301697-0-01	1	AIR CYL END LUG (GRPHL)
30	0-3014001-0-07	1	CLEVIS W/PIN
40	F011937	2	DC-ELB90 4X4NPT
50	F013685	1	DC-ELB90 4NPTX4NPT
60	A0758Y06	1	RESTRICTOR
70	F002737	1	DC-HEX JAM NUT 1/2-13 GR2 ZP
80	A0043057	2	5/16-24X3/4 SOCHDSCRNLOK

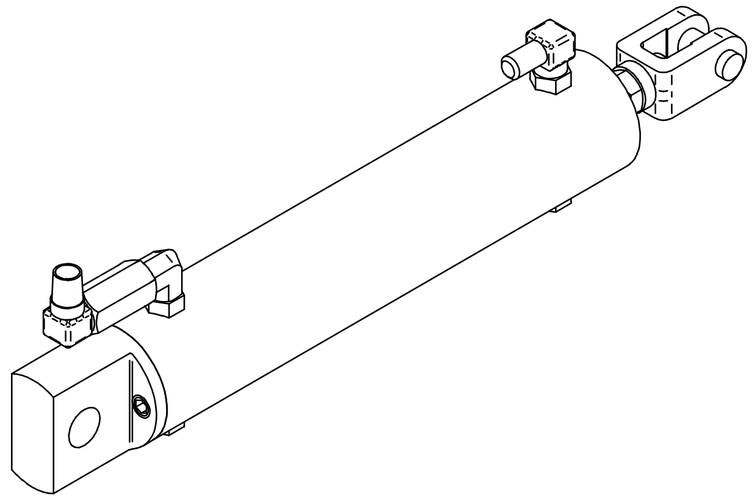

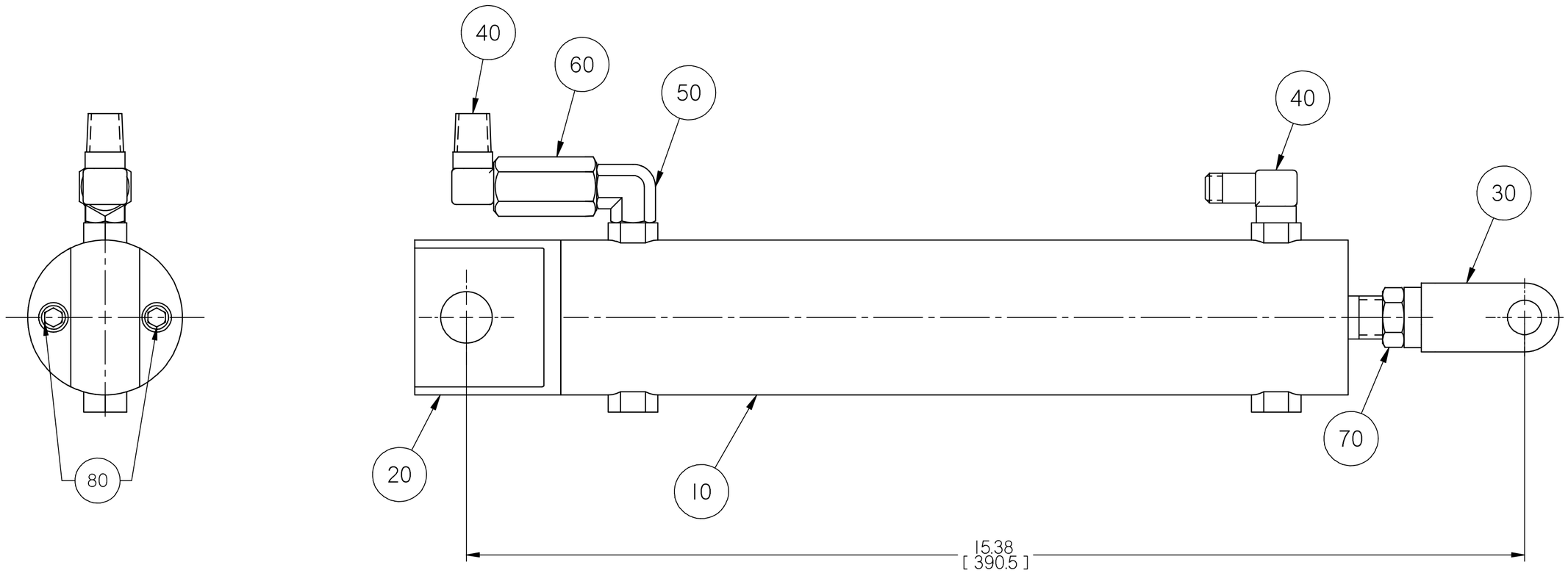

Inch
[mm]

CONFIDENTIAL

© COPYRIGHT 2011 HARSCO. THIS DRAWING OR DOCUMENT IS THE PROPERTY OF HARSCO AND EMBODIES CONFIDENTIAL INFORMATION, TRADE SECRET INFORMATION, AND/OR KNOW-HOW THAT IS THE PROPERTY OF HARSCO. BY ACCEPTING THIS DRAWING OR DOCUMENT, THE RECIPIENT AGREES (1) NOT TO PROVIDE, OR OTHERWISE MAKE AVAILABLE, THE DRAWING OR DOCUMENT, OR ANY INFORMATION OR KNOW-HOW EMBODIED THEREIN, TO ANY THIRD PARTY AND (2) NOT TO REPRODUCE OR USE THE DRAWING OR DOCUMENT TO MANUFACTURE ANY APPARATUS OR DEVICE, WITHOUT THE PRIOR WRITTEN AUTHORIZATION OF HARSCO.

NOMINAL SIZE RANGE		INCH PLUS OR MINUS		NOMINAL SIZE RANGE		METRIC PLUS OR MINUS	
OVER	TO	2 PLACE DECIMAL	3 PLACE DECIMAL	OVER	TO	1 PLACE DECIMAL	2 PLACE DECIMAL
0	6	.03	.005	0	150	.8	.13
6	24	.04	.008	150	600	1.0	.20
24	-	.06	.010	600	-	1.5	.25

UNLESS OTHERWISE SPECIFIED ALL MACHINED SURFACES WILL HAVE;
A SURFACE FINISH OF 125 MICROINCHES
ANGULAR TOLERANCE OF ± .50°
CONCENTRICITY WITHIN .010

THIRD ANGLE PROJECTION

UNLESS OTHERWISE SPECIFIED, ALL WELDS SHOULD ADHERE TO THE MOST CURRENT A.W.S WELDING STANDARDS

CHANGE	R/L	REVISION	DR	DATE
EC500910	E	SE DRAFT VERSION CREATED	SRK	05-10-11

Description: CYLINDER ASSY

HARSCO RAIL

Material: ---; ---

Machine Type: MARK IV

Weight: 7.0 lbm

Drawn: skumar

Date Drawn: 5/10/2011

Part Number: A1901YAA

Size: C

Sheet: 1 of 1

SOLID EDGE DRAWING

DO NOT SCALE

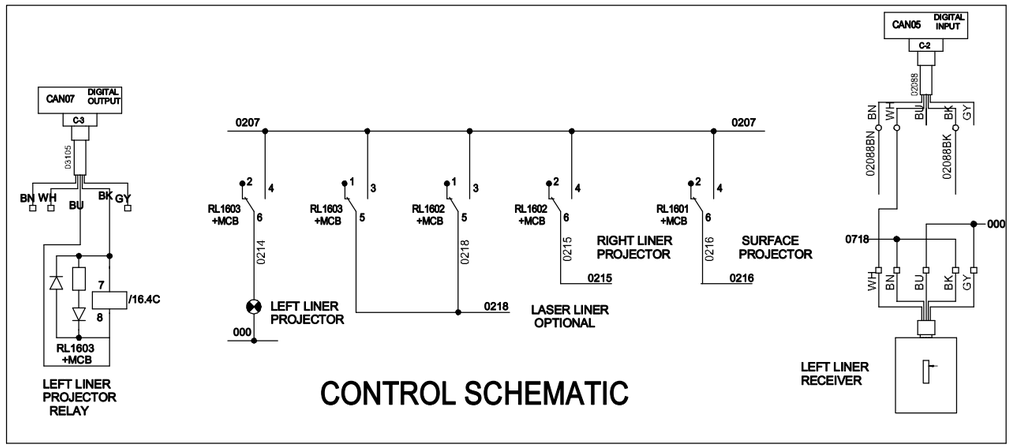

CONTROL SCHEMATIC

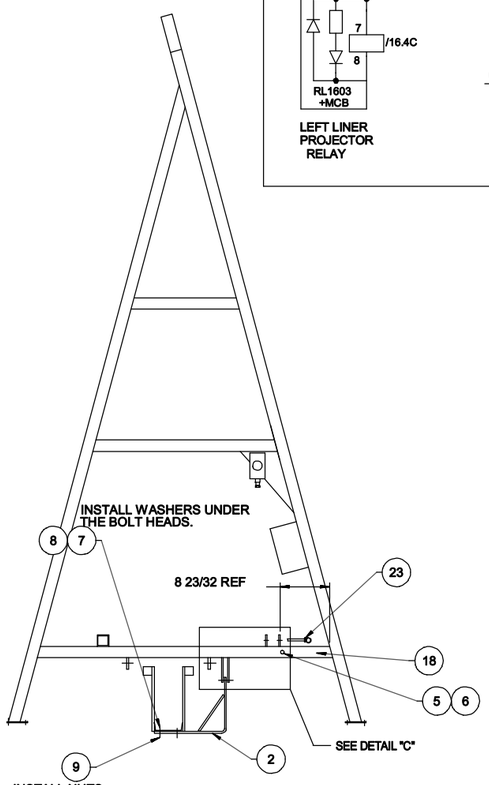

VIEW "A-A"

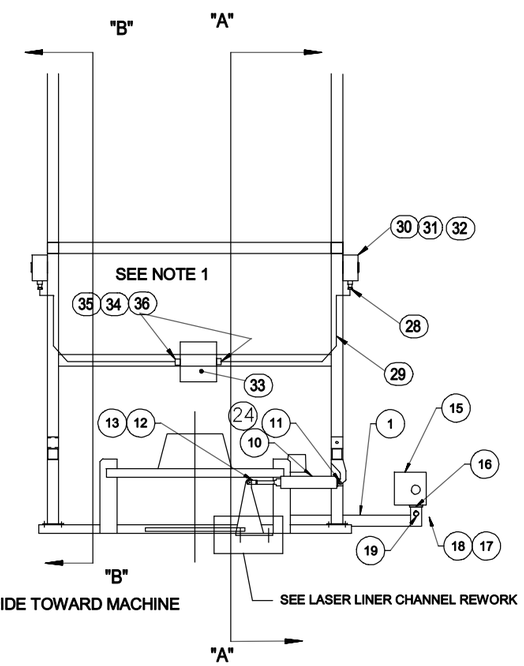

"B"
SIDE TOWARD MACHINE

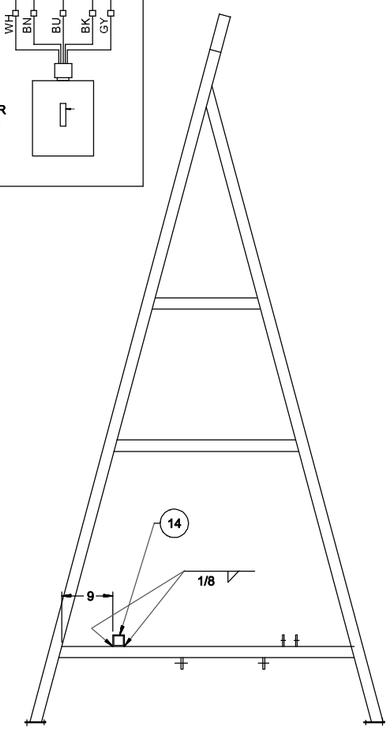

VIEW "B-B"

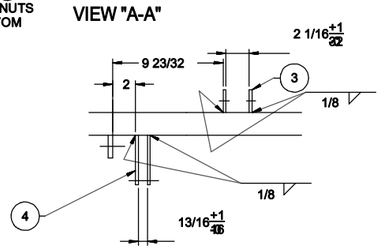

DETAIL "C"

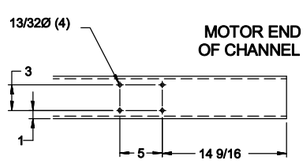

LASER LINER CHANNEL REWORK

FOR 56 1/2 GA MACHINES EQUIPPED WITH LASER ALIGNMENT.

NOTES:

1. RETURN EXISTING COVER (A6127Y01) AND RECEPTACLE (L421260) TO STORES.

(24) THIS IS ITEM NUMBER FOR AIR BIAS KIT

ITEM	PART NUMBER	DESCRIPTION	QTY
1	0-1500299-0-18	EXTENSION BAR	1
2	D5903YAA	BIASING BRKT WELDMENT	1
3	C6100T17	EYE	2
4	C9360X01	LUG	2
5	A0036011	1/4-20X2 1/2 HHCAPSCREW	1
6	L40237	ELASTIC STOPNUT #29-NU040 USE	5
7	A0036064	3/8-16 X 1 1/8 HH CAPSCREW	4
8	A0059003	3/8 REG PL WSHR	4
9	L40387	NUT ELASTIC STOP	4
10	0-3470019-0-06	AIR CYL.	1
11	0-3015002-0-17	3/8 D X 1 7/8 CLEVIS PIN	1
12	0-3014001-0-08	CLEVIS W/PIN	1
13	A0036009	1/4-20X2 HHCAPSCREW	1
14	C8830T23	TUBE	1
15	0-2100861-0-09	PROJECTOR ASSY (IRE)	1
16	Y690486	ADAPTER PLATE ASSY	1
17	A0071007	#8X1/2 PANHDTAPSCR CADPL	1
18	A0192T12	CHAIN	2
19	L422001	PIPPEN HANDLE	1
20	4018872	RECEIVER ARM TUBE WLDT	1
21	A0037002	1/4-20X1 HHCAPSCREW PL	4
22	4007012	RECEIVER, DOUBLE BARREL	1
23	L425851	PIP PIN T-HANDLE	1
24	C9396WAA	PROJECTOR AIR BIAS KIT	1
26	A9297Y03	16 GA. WIRE	10
28	A1278Y14	90 DEG STRAIN RELIEF	2
29	0-3212004-0-30	CABLE, 12/2 CARROL SOOW USE	9
30	C8865X02	RECEPTACLE BOX	2
31	C8863Y01	RECEPTACLE COVER	2
32	0-3236012-0-01	RECEPT.	2
33	0-3220010-0-01	COVER	1
34	0-3205006-0-01	GASKET	1
35	D0090Y05	WIRE NUT 76B	6
36	L40817	CONNECTOR	2

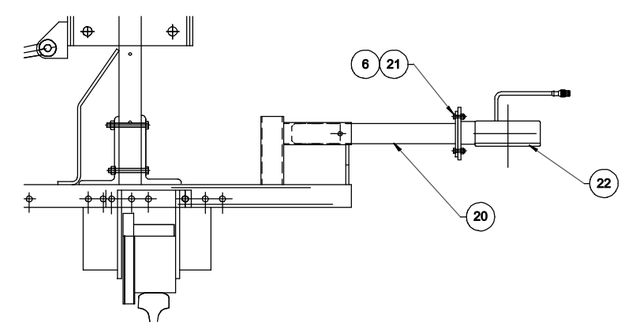

RECEIVER BUGGY INSTL

USE THIS VERSION IF USING LASER ALIGNMENT WITH DOUBLE BARREL RECEIVERS & 24 SLOT CHOPPER PROJECTORS

Inch [mm]

CONFIDENTIAL
© COPYRIGHT 2009 HARSCO. THIS DRAWING OR DOCUMENT IS THE PROPERTY OF HARSCO AND EMBODIES CONFIDENTIAL INFORMATION, TRADE SECRET INFORMATION, AND/OR KNOW-HOW THAT IS THE PROPERTY OF HARSCO. BY ACCEPTING THIS DRAWING OR DOCUMENT, THE RECIPIENT AGREES (1) NOT TO PROVIDE, OR OTHERWISE MAKE AVAILABLE, THE DRAWING OR DOCUMENT, OR ANY INFORMATION OR KNOW-HOW EMBODIED THEREIN, TO ANY THIRD PARTY AND (2) NOT TO REPRODUCE OR USE THE DRAWING OR DOCUMENT TO MANUFACTURE ANY APPARATUS OR DEVICE, WITHOUT THE PRIOR WRITTEN AUTHORIZATION OF HARSCO.

SOLID EDGE DRAWING

IMPLIED TOLERANCES
ALL DIMENSIONS ARE IN INCHES - TOLERANCE UNLESS OTHERWISE SPECIFIED

NOMINAL SIZE RANGE OVER	TO	INCH PLUS OR MINUS 2 PLACE DECIMAL	3 PLACE DECIMAL	NOMINAL SIZE RANGE OVER	TO	METRIC PLUS OR MINUS 1 PLACE DECIMAL	2 PLACE DECIMAL
0	6	.03	.005	0	150	.8	.13
6	24	.04	.008	150	600	1.0	.20
24	-	.06	.010	600	-	1.5	.25

UNLESS OTHERWISE SPECIFIED ALL MACHINED SURFACES WILL HAVE A SURFACE FINISH OF 125 MICROINCHES ANGULAR TOLERANCE OF +/-.05° CONCENTRICITY WITHIN .010

THIRD ANGLE PROJECTION

UNLESS OTHERWISE SPECIFIED, ALL WELDS SHOULD ADHERE TO THE MOST CURRENT A.W.S WELDING STANDARDS

CHANGE	R/L	REVISION	DATE
1308121	A	RELEASE	07-07-05
ECN-105640	B	ITEM 20 WAS D4427XAA	05-25-10

Description: DUAL REF ADDITION
Drawing Number: ————
Machine Type: DUAL REF ADDITION
Model: H6410WAD.asm
Drawn: hwiggins
Date Drawn: 05-25-10
Weight: 0.0 lbm
Scale: 1:4
APVD Dwg: HW
APVD Dtlng: JBR
Mat'l: - -
HARSCO RAIL
Part Number: H6410WAD
Size: D
Sheet: 1 of 2

Plotted by hwiggins on 1/13/2011 H6410WAD.dft

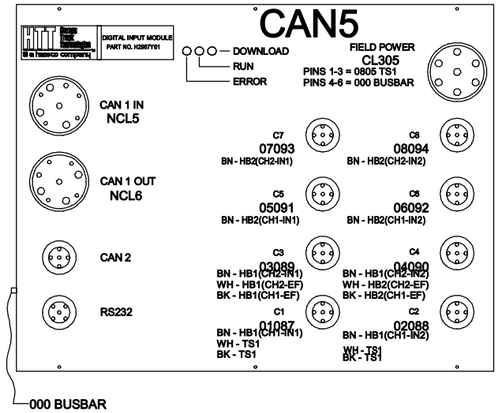

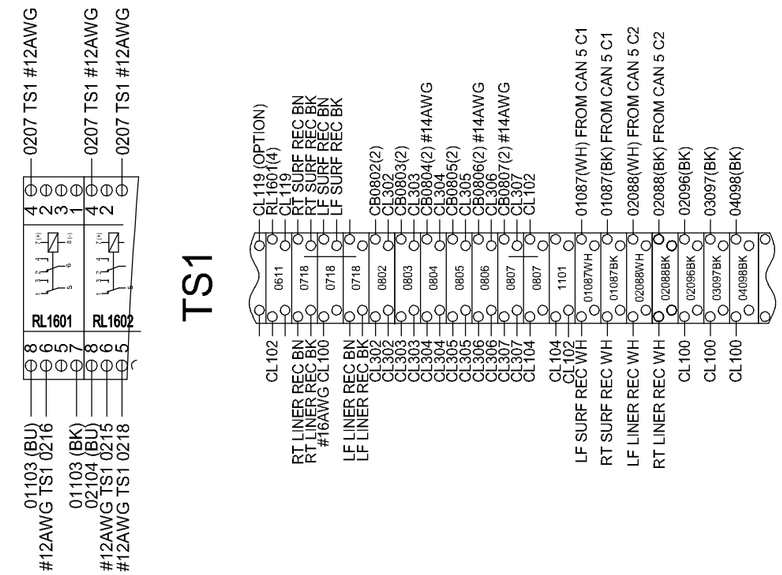

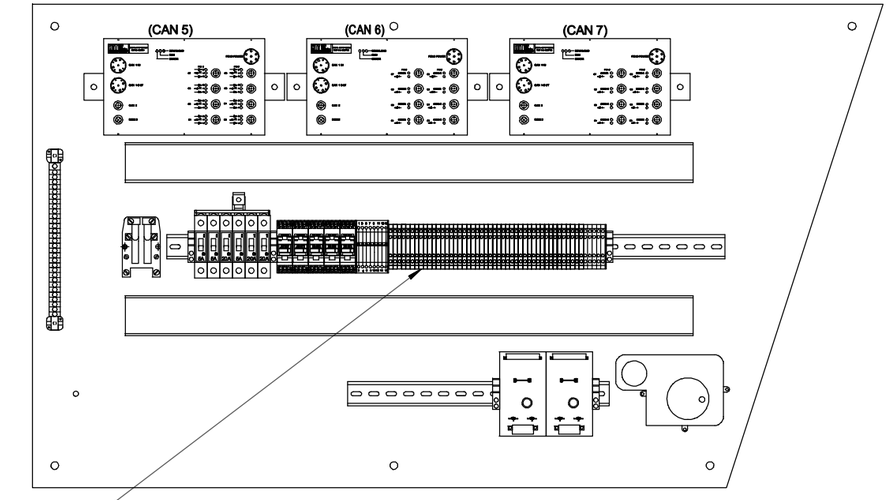

26

MCB PANEL

WIRING

NOTES CONTINUED:

2. REF BOLD PRINT FOR ASSEMBLY AND WIRING.

Inch
[mm]

CONFIDENTIAL

© COPYRIGHT 2009 HARSCO. THIS DRAWING OR DOCUMENT IS THE PROPERTY OF HARSCO AND EMBODIES CONFIDENTIAL INFORMATION, TRADE SECRET INFORMATION, AND/OR KNOW-HOW THAT IS THE PROPERTY OF HARSCO. BY ACCEPTING THIS DRAWING OR DOCUMENT, THE RECIPIENT AGREES (1) NOT TO PROVIDE, OR OTHERWISE MAKE AVAILABLE, THE DRAWING OR DOCUMENT, OR ANY INFORMATION OR KNOW-HOW EMBODIED THEREIN, TO ANY THIRD PARTY AND (2) NOT TO REPRODUCE OR USE THE DRAWING OR DOCUMENT TO MANUFACTURE ANY APPARATUS OR DEVICE, WITHOUT THE PRIOR WRITTEN AUTHORIZATION OF HARSCO.

SOLID EDGE DRAWING

IMPLIED TOLERANCES
ALL DIMENSIONS ARE IN INCHES - TOLERANCE UNLESS OTHERWISE SPECIFIED

NOMINAL SIZE RANGE		INCH PLUS OR MINUS		NOMINAL SIZE RANGE		METRIC PLUS OR MINUS	
OVER	TO	2 PLACE DECIMAL	3 PLACE DECIMAL	OVER	TO	1 PLACE DECIMAL	2 PLACE DECIMAL
0	6	.03	.005	0	150	.8	.13
6	24	.04	.005	150	600	1.0	.20
24	-	.06	.010	600	-	1.5	.25

UNLESS OTHERWISE SPECIFIED ALL MACHINED SURFACES WILL HAVE:
A SURFACE FINISH OF 125 MICROINCHES
ANGULAR TOLERANCE OF +- .25°
CONCENTRICITY WITHIN .010

THIRD ANGLE PROJECTION

UNLESS OTHERWISE SPECIFIED, ALL WELDS SHOULD ADHERE TO THE MOST CURRENT A.W.S WELDING STANDARDS

CHANGE	R/L	REVISION	DATE
1308121	A	RELEASE	07-07-05
ECN-105640	B	ITEM 20 WAS D4427XAA	05-25-10

Description: DUAL REF ADDITION
Drawing Number: ————
Machine Type: DUAL REF ADDITIO
Model: H6410WAD.asm
Weight: 0.0 lbm
Scale: 1:4
Drawn: hwiggins
Date Drawn: 05-25-10
APVD Dwg: HW
APVD Chkng: JBR
Mat'l: - -
HARSCO RAIL
Part Number: H6410WAD
Size: D
Sheet: 2 of 2

Plotted by hwiggins on 1/13/2011 H6410WAD.dft

ENG.DWG.NO.
H6410WAE

REVISIONS							
NO	ER	DESCRIPTION	ZONE	DR	CK	APP	MF
A	13081.21	NEW RELEASE		CJW	JBR	JBR	

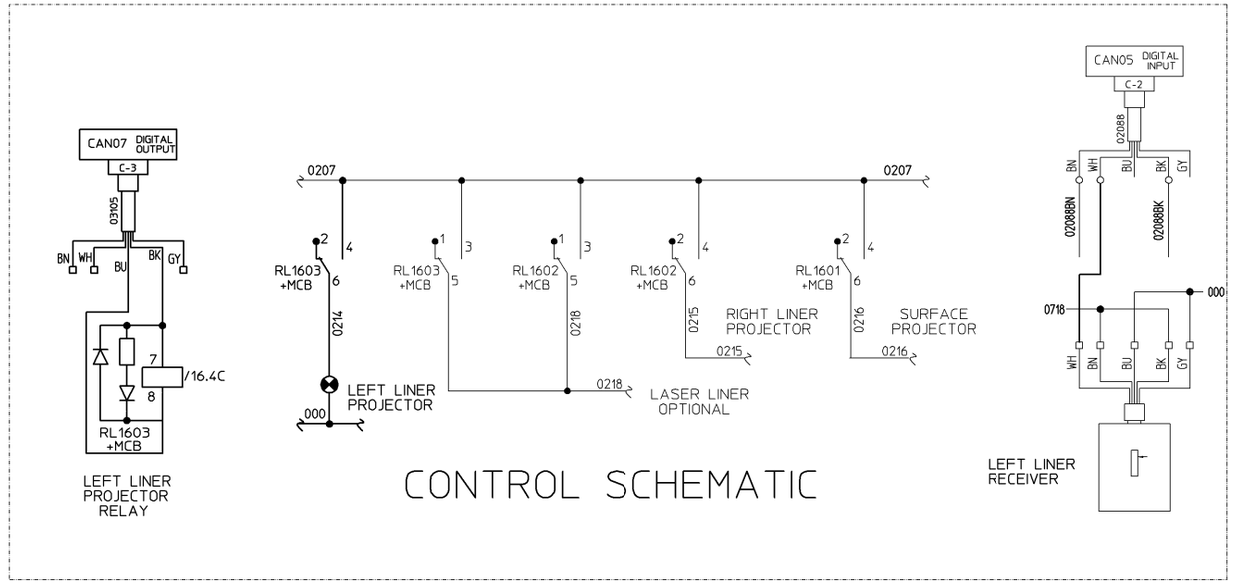

CONTROL SCHEMATIC

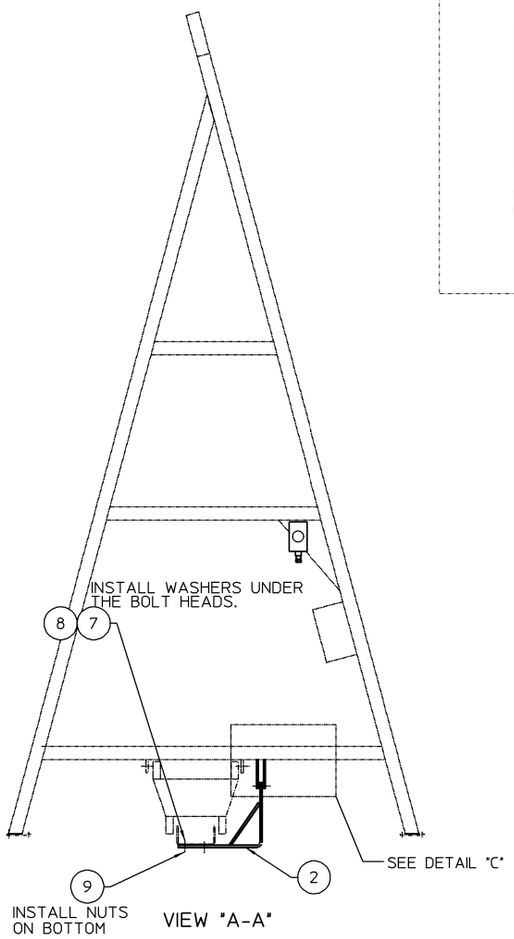

VIEW "A-A"

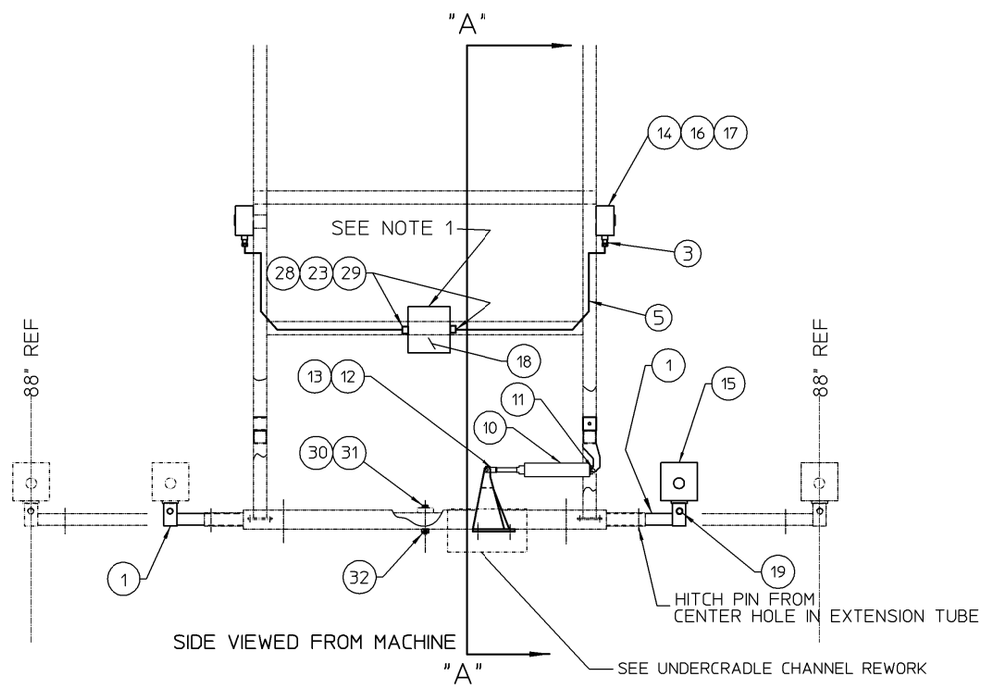

SIDE VIEWED FROM MACHINE

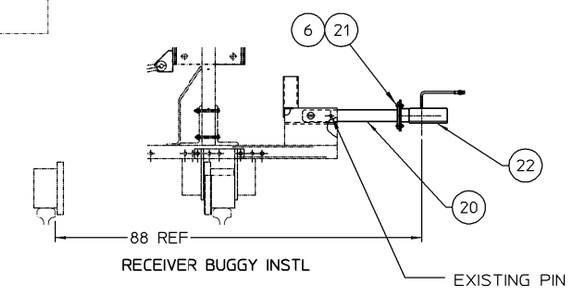

RECEIVER BUGGY INSTL

NOTES:

1. RETURN EXISTING COVER (A6127Y01), RECEPTACLE (L421260) & PROJ SUPT WLDT (0-2304170-0-01) TO STORES.

(24) THIS IS ITEM NUMBER FOR AIR BIAS KIT

USE THIS FOR STANDARD LINER WITH DOUBLE BARREL RECEIVERS & 24 SLOT CHOPPER PROJECTORS

SEE SEPARATE PARTS LIST

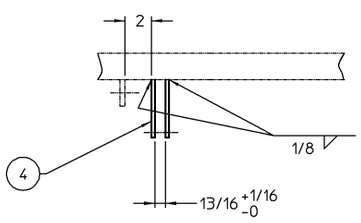

DETAIL "C"

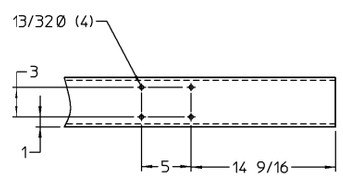

UNDER CRADLE CHANNEL REWORK

FIG NO.	ITEM NO.	PART NUMBER	DESCRIPTION AND MATERIAL SIZE (REF.ONLY)	QTY

IMPLIED TOLERANCES
ALL DIMENSIONS ARE IN INCHES-TOLERANCE UNLESS OTHERWISE SPECIFIED

NOMINAL SIZE RANGE		PLUS OR MINUS			NOMINAL SIZE RANGE		PLUS OR MINUS		
OVER	TO	FRACTION	2 PLACE DECIMAL	3 PLACE DECIMAL	OVER	TO	FRACTION	2 PLACE DECIMAL	3 PLACE DECIMAL
-	1	1/64	.01	.003	6	24	3/64	.03	.008
1	6	1/32	.02	.005	24	-	1/16	.05	.010

ANGULAR DIMENSIONS PLUS OR MINUS 1 DEGREE

√ ALL MACHINED SURFACES TO HAVE A SURFACE FINISH OF 125 MICRONCHES UNLESS OTHERWISE SPECIFIED.

WELDING SPECIFICATION

UNLESS OTHERWISE SPECIFIED ALL WELDS SHOULD ADHERE TO FAIRMONT TAMPER WELDING SPECIFICATION NO. 101

WEIGHT lbs.

3rd ANGLE PROJECTION

DO NOT SCALE

SHEET 1 CONT. ON 2

DESCRIPTION Q4
DUAL REF ADDITION

DRAWN CJWolf	DATE 9-7-05	MACHINE TYPE MKIV JUPITER 2005
CHECKED JBR	DATE 9-7-05	
APP-ENG JBR	DATE 9-7-05	Fairmont Tamper™ 2401 Edmund Road-Box 20 Coyce-West Columbia, South Carolina 29171-0020 (803) 822-9160
APP-MFG	DATE	
LAST ECR. 13081 .21	CHECKED dvan	ENG.DWG.NO. H6410WAE
	DATE 7-Sep-05	

PLOT SCALE -12

THIS DOCUMENT CONTAINS PROPRIETARY INFORMATION AND SUCH INFORMATION MAY NOT BE DISCLOSED TO OTHERS FOR ANY PURPOSE OR USED FOR MANUFACTURING PURPOSES WITHOUT THE WRITTEN PERMISSION OF FAIRMONT TAMPER.

ENG.DWG.NO.
H6410WAE

REVISIONS							
NO	ER	DESCRIPTION	ZONE	DR	CK	APP	MF
A	1308121	NEW RELEASE		CJW	JBR	JBR	

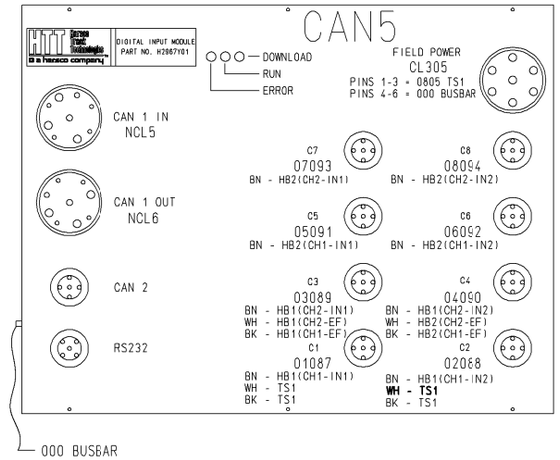

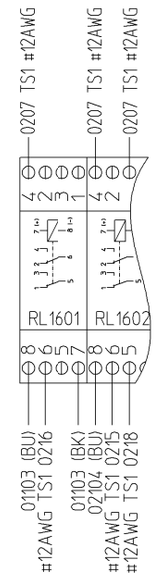

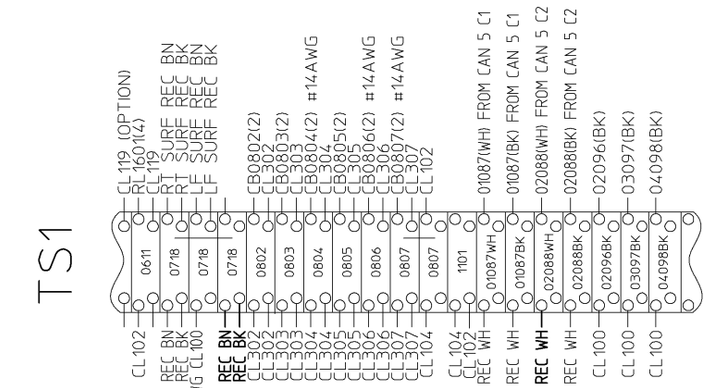

WIRING

NOTES CONTINUED:
2. REF BOLD PRINT FOR ASSEMBLY AND WIRING.

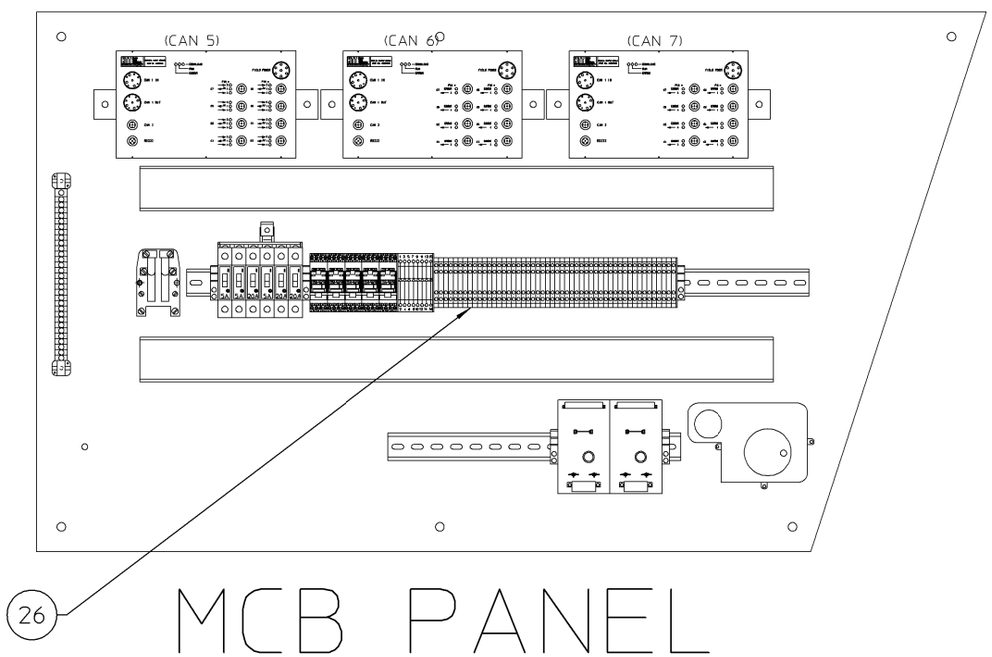

MCB PANEL

SCALE=2.5

FIG NO.	ITEM NO.	PART NUMBER	DESCRIPTION AND MATERIAL SIZE (REF.ONLY)	QTY
			SEE SEPARATE PARTS LIST	

IMPLIED TOLERANCES
ALL DIMENSIONS ARE IN INCHES-TOLERANCE UNLESS OTHERWISE SPECIFIED

NOMINAL SIZE RANGE		PLUS OR MINUS			NOMINAL SIZE RANGE		PLUS OR MINUS		
OVER	TO	FRACTION	2 PLACE DECIMAL	3 PLACE DECIMAL	OVER	TO	FRACTION	2 PLACE DECIMAL	3 PLACE DECIMAL
-	1	1/64	.01	.003	6	24	3/64	.03	.008
1	6	1/32	.02	.005	24	-	1/16	.05	.010

ANGULAR DIMENSIONS PLUS OR MINUS 1 DEGREE

√ ALL MACHINED SURFACES TO HAVE A SURFACE FINISH OF 125 MICROINCHES UNLESS OTHERWISE SPECIFIED.

WELDING SPECIFICATION

UNLESS OTHERWISE SPECIFIED ALL WELDS SHOULD ADHERE TO FAIRMONT TAMPER WELDING SPECIFICATION NO. 101

WEIGHT lbs.

3rd ANGLE PROJECTION

DO NOT SCALE

SHEET 2 CONT. – ON —

DESCRIPTION (24)
DUAL REF ADDITION

DRAWN CJWolf	DATE 9-7-05	MACHINE TYPE MKIV JUPITER 2005	
CHECKED JBR	DATE 9-7-05		
APP-ENG JBR	DATE 9-7-05	Fairmont Tamper™	2401 Edmund Road-Box 20 Cayce-West Columbia, South Carolina 29171-0020 (803) 822-9560
APP-MFG	DATE		
LAST ECR. 13081 .21	CHECKED dvan	ENG.DWG.NO. H6410WAE	
	DATE 7-Sep-05		

THIS DOCUMENT CONTAINS PROPRIETARY INFORMATION AND SUCH INFORMATION MAY NOT BE DISCLOSED TO OTHERS FOR ANY PURPOSE OR USED FOR MANUFACTURING PURPOSES WITHOUT THE WRITTEN PERMISSION OF FAIRMONT TAMPER.

PARTS LIST

ITEM NO	PART NUMBER	DESCRIPTION	QUANTITY (ASSEMBLY IDENTIFIER)
1	0-2304179-0-02	PROJECTOR SUPPORT WELDT	2
2	D5903YAA	BIASING BRKT WELDT	1
3	A1278Y14	STRAIN RELIEF 90 DEG	2
4	C9360X01	LUG	2
5	0-3212004-0-30	CABLE, 12/2	9
6	L40237	1/4-20 ESNA NUT	5
7	A0036064	3/8-16 X 1 1/8 HHCS	4
8	A0059003	3/8 FLAT WASHER	4
9	L40387	3/8-16 ESNA NUT	4
10	0-3470019-0-06	AIR CYL DBL ACT.	1
11	0-3015002-0-17	CLEVIS PIN	1
12	0-3014001-0-08	CLEV.W/PIN	1
13	A0036009	1/4-20 X 2 HHCS	1
14	C8865X02	RECEPTACLE BOX	2
15	0-2100861-0-09	PROJECTOR ASSY, IRE SYS	1
16	C8863Y01	BOX COVER	2
17	0-3236012-0-01	TWISTLOCK RECEPTACLE	2
18	0-3220010-0-01	ELECTROLET COVER	1
19	0-3015004-0-03	1/2 X 4 HITCH PIN	1
20	D4427XAA	RECEIVER ARM TUBE WLDT	1
21	A0037002	1/4-20 X 1 CP HHCS	4
22	4007012	DOUBLE BARREL RECEIVER	1
23	0-3205006-0-01	GASKET(4 9/16x4 5/8)	1
24	C9396WAA	PROJECTOR AIR BIAS KIT	1
25	BLANK		
26	A9297Y03	COPPER WIRE, 16AWG	10
27	BLANK		
28	D0090Y05	WIRE NUT 76B	6
29	L40817	1/2 IN ST STRAIN RELIEF	2
30	A0036133	1/2-13 X 4 HHCS	1
31	A0059005	1/2 FLAT WASHER	1
32	0-3011001-0-38	LOCKNUT ESNA-GRIPCO	1
33	H6410WAA	DUAL REF ADDITION	REF

STD PROJECTORS NO LASER

REVISIONS

NO	ER	DESCRIPTION	DR	CK	APP	MF
A	13081.21	NEW RELEASE	CJW	JBR	JBR	

ASSEMBLY DESCRIPTION: ER, DR, CK, APP, MF

DWG NO H6410WAE
SHEET 1
CONT ON –
DESCRIPTION (24) DUAL REF ADDITION
DRAWN CJWolf
DATE 9-7-05
CHECKED JBR
DATE 9-7-05
APP JBR
DATE 9-7-05
APP
DATE

LAST ECR 13081.21
CHECKED dvan
DATE 7-Sep-05

Fairmont Tamper™
2401 Edmund Road-Box 20
Cayce-West Columbia,
South Carolina 29171-0020
(803) 822-9160

ENG.DWG.NO.
0-2100861-0-09

REVISIONS							
NO	ER	DESCRIPTION	ZONE	DR	CK	APP	MF
18	12183 .1	REDRAWN ON CAD, AND REVISED FOR CLARITY. DEL IT.43 & VIEW 'C'. ADD NOTES 10, 11 & VIEW 'D'.		EP	HW	WG	
S	13081 .18	ADDED ITEMS 77 & 78.		CJW	JBR	JBR	

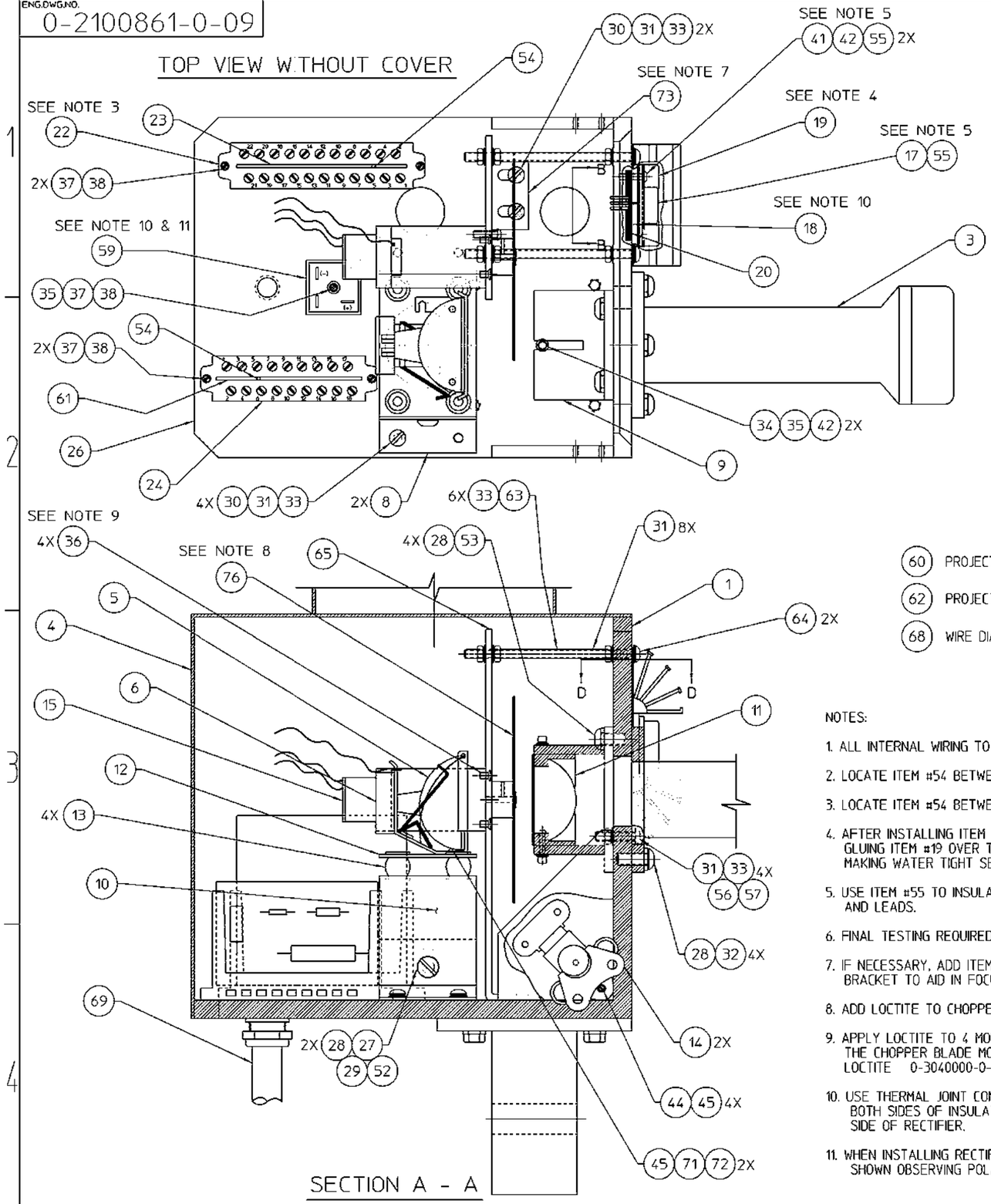

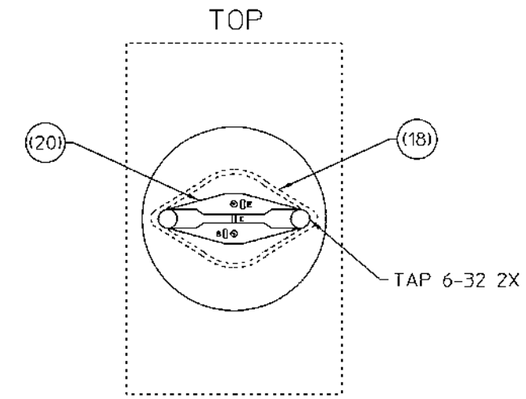

VIEW "B - B"
ENLARGED FOR MOUNTING

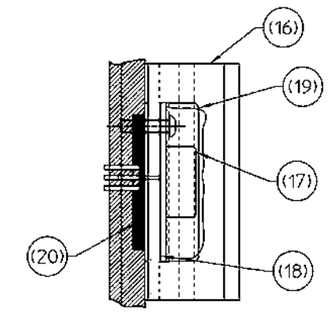

VIEW "D - D"
ENLARGED FOR MOUNTING

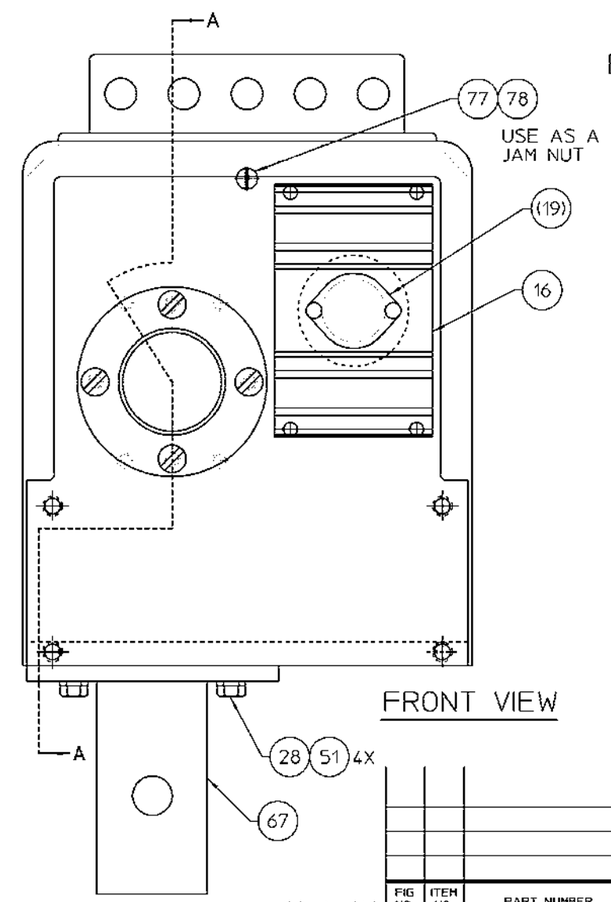

FRONT VIEW

(60) PROJECTOR ASSY SCHEMATIC

(62) PROJECTOR SET-UP

(68) WIRE DIAGRAM

NOTES:

1. ALL INTERNAL WIRING TO BE #18 AWG.
2. LOCATE ITEM #54 BETWEEN TERMINALS #5 & #6.
3. LOCATE ITEM #54 BETWEEN TERMINALS #4 & #5.
4. AFTER INSTALLING ITEM #17 USE SILICONE FOR GLUING ITEM #19 OVER THE FACE OF ITEM #17 MAKING WATER TIGHT SEAL.
5. USE ITEM #55 TO INSULATE TRANSISTOR SCREWS AND LEADS.
6. FINAL TESTING REQUIRED.
7. IF NECESSARY, ADD ITEM #73 (SHIM) TO MOTOR BRACKET TO AID IN FOCUSING.
8. ADD LOCTITE TO CHOPPER BLADE SET SCREWS.
9. APPLY LOCTITE TO 4 MOUNTING SCREWS FOR THE CHOPPER BLADE MOTOR. LOCTITE 0-3040000-0-06
10. USE THERMAL JOINT COMPOUND (L422653) ON BOTH SIDES OF INSULATOR, AND ON BOTTOM SIDE OF RECTIFIER.
11. WHEN INSTALLING RECTIFIER, INSTALL AS SHOWN OBSERVING POLARITY (-), (+).

FIG NO.	ITEM NO.	PART NUMBER	DESCRIPTION AND MATERIAL SIZE (REF.ONLY)	QTY

IMPLIED TOLERANCES
ALL DIMENSIONS ARE IN INCHES-TOLERANCE UNLESS OTHERWISE SPECIFIED

NOMINAL SIZE RANGE		PLUS OR MINUS			NOMINAL SIZE RANGE		PLUS OR MINUS		
OVER	TO	FRACTION	2 PLACE DECIMAL	3 PLACE DECIMAL	OVER	TO	FRACTION	2 PLACE DECIMAL	3 PLACE DECIMAL
-	1	1/64	.01	.003	6	24	3/64	.03	.008
1	6	1/32	.02	.005	24	-	1/16	.05	.010

ANGULAR DIMENSIONS PLUS OR MINUS 1 DEGREE
√ ALL MACHINED SURFACES TO HAVE A SURFACE FINISH OF 125 ROOTINCHES UNLESS OTHERWISE SPECIFIED.

WELDING SPECIFICATION

UNLESS OTHERWISE SPECIFIED ALL WELDS SHOULD ADHERE TO FAIRMONT TAMPER WELDING SPECIFICATION NO. 101

WEIGHT — 3rd ANGLE PROJECTION

DO NOT SCALE

SHEET 1 CONT. — ON —

DESCRIPTION (24): PROJECTOR ASSY, IRE SYS

DRAWN S. BACON	DATE	MACHINE TYPE MARK IV, MKVI
CHECKED CB ROGERS	DATE	
APP-ENG	DATE	Fairmont Tamper™ 2601 Edmund Road-Box 20 Cayce-West Columbia, South Carolina 29171-0020 (803) 822-9160
APP-MFG	DATE	
LAST ECR. 13081 .18	CHECKED dvgn DATE 2-Sep-05	DWG/DWG.NO. 0-2100861-0-09

THIS DOCUMENT CONTAINS PROPRIETARY INFORMATION AND SUCH INFORMATION MAY NOT BE DISCLOSED TO OTHERS FOR ANY PURPOSE OR USED FOR MANUFACTURING PURPOSES WITHOUT THE WRITTEN PERMISSION OF FAIRMONT TAMPER.

PARTS LIST

ITEM NO	PART NUMBER	DESCRIPTION	QUANTITY
1	0-1100860-0-01	PROJ HOUSING DRILLING	1
~~2~~	~~0-1201171-0-01~~	~~MOTOR MOUNTING BRKT~~	~~0~~
3	Y684614	INFRARED FILTER ASSEMBLY	1
4	X752836A	COVER ASSY	1
5	B9263Y01	PROJECTOR BULB	1
6	C8106Y01	SOCKET RWK, D.C.	1
~~7~~	~~Y684121B~~	~~CHOPPER BLADE ASSY~~	~~0~~
8	Z684284	LAMP BRKT	2
9	Y683992	LENS HOLDER BRKT	1
10	C1182X01	BRACKET	1
11	Z684112	PROJ LENS HOLDER ASSY	1
12	C1192Y01	ALUMINUM	1
13	L411271	SHOCK ABSORBER	4
14	L41620	SPRING FASTENER	2
15	0-3187013-0-01	PROJECTOR MOTOR	1
16	0-1404878-0-01	HEAT SINK REWORK	1
17	L424961	DARLINGTON POWER TRANSIS	1
18	0-3204003-0-01	INS, POWER SEMICONDUCTOR	1
19	0-3204002-0-01	TO-3 CASE INSULTNG COVER	1
20	L422417	TRANSISTOR SOCKET	1
~~21~~	~~0-1302129-0-01~~	~~MOTOR HEAT SHIELD JRE~~	~~0~~
22	0-3237004-0-01	PCB CONN CARD GUIDE	1
23	0-2302202-0-01	CONTROL BOARD	1
24	0-3237004-0-02	PCB CONN CARD GUIDE	1
~~25~~	~~0-2302250-0-01~~	~~LAMP VOLTAGE CONTROL BOARD~~	~~0~~
26	A9297Y02	COPPER WIRE, 18AWG	8
27	A0036001	1/4-20 X 1/2 HHCS	2
28	A0061008	1/4 MEDIUM LOCK WASHER	10
29	A0055009	1/4-20 HEX NUT	2
30	A0050053	10-24 X 3/8 PL RD HD MS	6
31	A0059025	10 MEDIUM PLTD FL WASH	18
32	A0050077	1/4-20 X 5/8 RD HD MS	4
33	A0061006	10 PLATED LOCK WASHER	16

ASSEMBLY IDENTIFIER

MKIV / MKVI IRE LINER

REVISIONS

NO	ER	DESCRIPTION	DR	CK	APP	MF
18	12183.1	SEPARATED FROM TABS 01-08. ADD TO DATA BASE. IT.26 WAS L411094 QTY OF 1. IT.30 QTY WAS 9. IT.31 QTY WAS 8.	EP	HW	WG	
S		NO CHANGE				

ASSEMBLY DESCRIPTION

ER
DR
CK
APP
MF

Fairmont Tamper™
2401 Edmund Road-Box 20
Cayce-West Columbia,
South Carolina 29171-0020
(803) 822-9160

DWG NO 0-2100861-0-09

SHEET 1 CONT ON 2

DESCRIPTION (24) PROJECTOR ASSY, IRE SYS

DRAWN S. BACON

DATE

CHECKED CB ROGERS

DATE

APP

DATE

APP

DATE

SHEET 1 CONT ON 2

LAST ECR. 13081 .18

CHECKED dvan

DATE 2-Sep-05

DWG NO 0-2100861-0-09

PARTS LIST

ITEM NO	PART NUMBER	DESCRIPTION	QUANTITY
34	A0041004	6-32 X 1/2 SOC HD CS GR8	2
35	A0059024	6 MEDIUM PLATED FL WASH	3
36	A0052006	6-32 X 1/4 PL FL HD MS	4
37	A0050102	5-40 X 1/2 PL RD HD MS	5
38	A0061003	5 PLATED LOCK WASHER	5
~~39~~		~~#5-40 X 3/8 SL RD HD MACH SCR~~	~~0~~
~~40~~		~~#5 HEX NUT~~	~~0~~
41	A0050025	6-32 X 1/2 PL RD HD MS	2
42	A0061004	6 PLATED LOCK WASHER	4
~~43~~		~~#6 HEX NUT~~	~~2~~
44	A0071125	4-40 X 1/4 PL HHCS	4
45	A0061002	4 PLATED LOCK WASHER	6
~~46~~		~~1/8 DIA X 1/4 LG POP RIVET~~	~~0~~
~~47~~	~~0-2404860-0-01~~	~~CABLE CL128~~	~~0~~
~~48~~	~~0-2302049-0-01~~	~~ADAPTER PLATE ASSY~~	~~0~~
~~49~~	~~L40177~~	~~CHAIN 12 in.~~	~~0~~
~~50~~	~~L422001~~	~~PIP PIN~~	~~0~~
51	A0036003	1/4-20 X 3/4 HHCS	4
52	A0059001	1/4 MEDIUM FLAT WASHER	2
53	A0050076	1/4-20 X 1/2 RD HD MS	4
54	L422468	POLARIZING KEY	2
55	L422146	SHRINK TUBING,1/8" (1")	1
56	A0071136	10-24 X 3/4 PL HHCS	4
57	A0055006	10-24 PLATED HEX NUT	4
~~58~~	~~0-2305661-0-01~~	~~CABLE 750~~	~~0~~
59	0-3152004-0-06	BRIDGE RECTIFIER	1
60	0-1203294-0-01	PROJ ASS'Y SCHEMATIC	REF
61	0-2306408-0-01	CONTROL BOARD	1
62	A3406Y01	PROJECTOR SET-UP	REF
63	A0055039	10-24 PLATED HEX NUT	6
64	A0050094	10-24 X 3-1/2 PL RD HDMS	2
65	A4553X01	BRACKET,MOTOR	1
~~66~~	~~Z754020C~~	~~CHOPPER DISK ASSY~~	~~0~~

ASSEMBLY IDENTIFIER

MKIV / MKVI IRE LINER

ASSEMBLY DESCRIPTION

ER
DR
CK
APP
MF

REVISIONS

NO	ER	DESCRIPTION	DR	CK	APP	MF
18	12183.1	IT.35 QTY WAS 2. IT.37 & 38 QTY WAS 4. IT.41 WAS A0050019. DEL IT.43. IT.51 WAS A0036007. IT.52 QTY WAS 3. IT.62 WAS QTY OF 1.	EP	HW	WG	
S		NO CHANGE				

SHEET 2 CONT ON 3
LAST ECR. 13081 .18
CHECKED dvan
DATE 2-Sep-05
DWG NO 0-2100861-0-09

DWG NO 0-2100861-0-09
SHEET 2
CONT ON 3
DESCRIPTION (24) PROJECTOR ASSY, IRE SYS
DRAWN S BACON
DATE
CHECKED CB ROGERS
DATE
APP
DATE
APP
DATE

Fairmont Tamper™
2401 Edmund Road-Box 20
Cayce-West Columbia,
South Carolina 29171-0020
(803) 822-9160

PARTS LIST

ITEM NO	PART NUMBER	DESCRIPTION	QUANTITY
67	0-2304178-0-01	PROJECTOR MTG BRKT	1
68	A6118X01	WIRE DIAGRAM	REF
69	A6120YAA	CABLE CL1177	1
~~70~~	~~B5946XAA~~	~~PROJECTOR LENS HOUSING~~	~~0~~
71	A0050008	4-40 X 1/4 PL RD HD MS	2
72	A0055002	4-40 PLATED HEX NUT	2
73	N/A	BRASS SHIM STOCK	REF
~~74~~	~~C3329X01~~	~~PROJECTOR ASS'Y SCHEMATIC~~	~~0~~
~~75~~	~~C3324YAA~~	~~PROJ LAMP VOLT CONTROL ASSY~~	~~0~~
76	Z754020A	CHOPPER DISK ASSY	1
77	A0050057	10-24 X 7/8 PL RD HD MS	1
78	A0055006	10-24 HEX NUT	1

ASSEMBLY IDENTIFIER

DWG NO 0-2100861-0-09

SHEET 3 CONT ON -

DESCRIPTION (24) PROJECTOR ASSY, IRE SYS

DRAWN S BACON

DATE

CHECKED CB ROGERS

DATE

APP

DATE

APP

DATE

SHEET 3 CONT ON - LAST ECR. 13081.18 CHECKED dvan DATE 2-Sep-05 DWG NO 0-2100861-0-09

REVISIONS

NO	ER	DESCRIPTION	DR	CK	APP	MF
18	12183.1	IT.68 QTY WAS 1. IT.73 QTY WAS "AS REQ'D." IT.74 WAS QTY OF 1.	EP	HW	WG	
S	13081.18	ADDED ITEMS 77 & 78	CJW	JBR	JBR	

MKIV / MKVI IRE LINER

ASSEMBLY DESCRIPTION

ER
DR
CK
APP
MF

Fairmont Tamper™
2401 Edmund Road-Box 20
Cayce-West Columbia,
South Carolina 29171-0020
(803) 822-9160

ENG. DWG NO
2 0-1203294-0

NO	DEN	DESCRIPTION		
1	83/12	NEW RELEASE	H W	

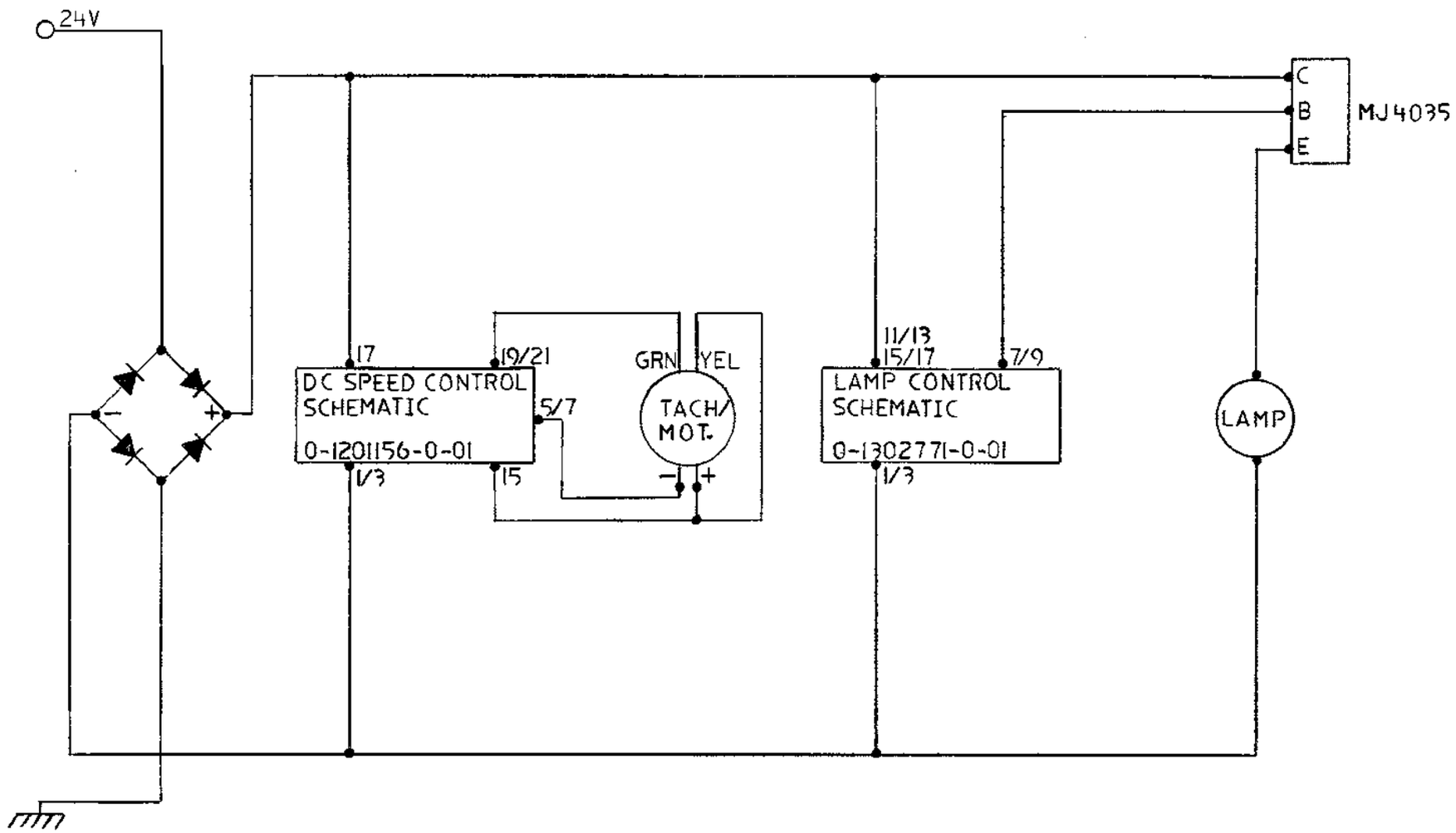

THIS DOCUMENT CONTAINS PROPRIETARY INFORMATION AND SUCH INFORMATION MAY NOT BE DISCLOSED TO OTHERS FOR ANY PURPOSE OR USED FOR MANUFACTURING PURPOSES WITHOUT THE WRITTEN PERMISSION OF TAMPER.

3rd ANGLE PROJECTION

DO NOT SCALE

WEIGHT ____ lbs.

IMPLIED TOLERANCES
ALL DIMENSIONS ARE IN INCHES — TOLERANCE UNLESS OTHERWISE SPECIFIED

NOMINAL SIZE RANGE OVER	TO	PLUS OR MINUS FRACTION	2 PLACE DECIMAL	3 PLACE DECIMAL	NOMINAL SIZE RANGES OVER	TO	PLUS OR MINUS FRACTION	2 PLACE DECIMAL	3 PLACE DECIMAL
—	1	1/64	.01	.003	6	24	3/64	.03	.008
1	6	1/32	.02	.005	24	—	1/16	.05	.010

ANGULAR DIMENSIONS PLUS OR MINUS 1 DEGREE
ALL MACHINED SURFACES TO HAVE A SURFACE FINISH OF 125 MICROINCHES UNLESS OTHERWISE SPECIFIED

DESCRIPTION (30)
PROJECTOR ASS'Y SCHEMATIC

DRAWN WODKE	DATE 4-12-83	MACHINE TYPE JRM/STM 24V
CHECKED	DATE 4/22/83	
APP	DATE APR 16 1983	Tamper Div. Cameron Corp 2401 Edmund Road West Columbia South Carolina 29169 Tel (803) 794-9160 Telex 573435
APP	DATE	
SHEET 1	CONT ON 2	ENG. DWG. NO. 2 0-1203294-0

ITEM NO	PART NO	LEG	DESCRIPTION	QTY
1	0-1203294-0-01			

american blueprint of columbia

ENGS.-10 31436

ENG.DWG.NO.
A3406Y01

REVISIONS							
NO	ER	DESCRIPTION	ZONE	DR	CK	APP	MF
1		NEW RELEASE		JLS			
2	12178.	ADD TO DATABASE. REVISED NOTES 1 & 2. DEL TABLE CHART.		EP	HW	NW	

PROJECTOR SETUP

1) PROJECTOR SPEED CONTROL

MEASURE FROM PIN 5 TO PIN 15 AND ADJUST R1 TO 15VDC.

2) PROJECTOR LAMP VOLT CONTROL ASS'Y

MEASURE FROM PIN 3 TO PIN 18. READING SHOULD BE BETWEEN 16 TO 17VDC

3) FOCUS LAMP

LOOSEN LAMP HOLDER, SLIDE FOWARD OR REVERSE UNTIL LAMP ELEMENT IS CLEARLY REFLECTED ON TEST STAND. TIGHTEN DOWN LAMP ASS'Y.

IMPLIED TOLERANCES
ALL DIMENSIONS ARE IN INCHES-TOLERANCE UNLESS OTHERWISE SPECIFIED

NOMINAL SIZE RANGE		PLUS OR MINUS			NOMINAL SIZE RANGE		PLUS OR MINUS		
OVER	TO	FRACTION	2 PLACE DECIMAL	3 PLACE DECIMAL	OVER	TO	FRACTION	2 PLACE DECIMAL	3 PLACE DECIMAL
-	1	1/64	.01	.003	6	24	3/64	.03	.008
1	6	1/32	.02	.005	24	-	1/16	.05	.010

AUGULAR DIMENSIONS PLUS OR MINUS 1 DEGREE

√ ALL MACHINED SURFACES TO HAVE A SURFACE FINISH OF 125 MICROINCHES UNLESS OTHERWISE SPECIFED.

WEIGHT lbs.

3rd ANGLE PROJECTION

DO NOT SCALE

WELDING SPECIFICATION
UNLESS OTHERWISE SPECIFIED ALL WELDS SHOULD ADHERE TO FAIRMONT TAMPER WELDING SPECIFICATION 101

MATERIAL

DESCRIPTION (24)
PROJECTOR SET-UP

DRAWN	DATE	MACHINE TYPE
SEGROVES	4-23-84	TLPM
CHECKED	DATE	
APP-ENG	DATE	
SHEET 1	CONT. ON —	
LAST ECR. 12178 .1	CHECKED hwj	ENG.DWG.NO. A3406Y01
	DATE 30-Jun-00	

Fairmont Tamper™
2401 Edmund Road-Box 20
Cayce-West Columbia,
South Carolina 29171-0020
(803) 822-9160

ENG.DWG.NO.
A6118X01

REVISIONS							
NO	ER	DESCRIPTION	ZONE	DR	CK	APP	MF
1		NEW RELEASE				RSM	
2		REDRAWN FOR DATA BASE: PWR TRANS(C) WAS GOING TO VLT CNTRL(15); PWR TRANS(E) WAS GOING TO BULB SCKT - NOW GOING TO VLT CNTRL(18)		JZ			

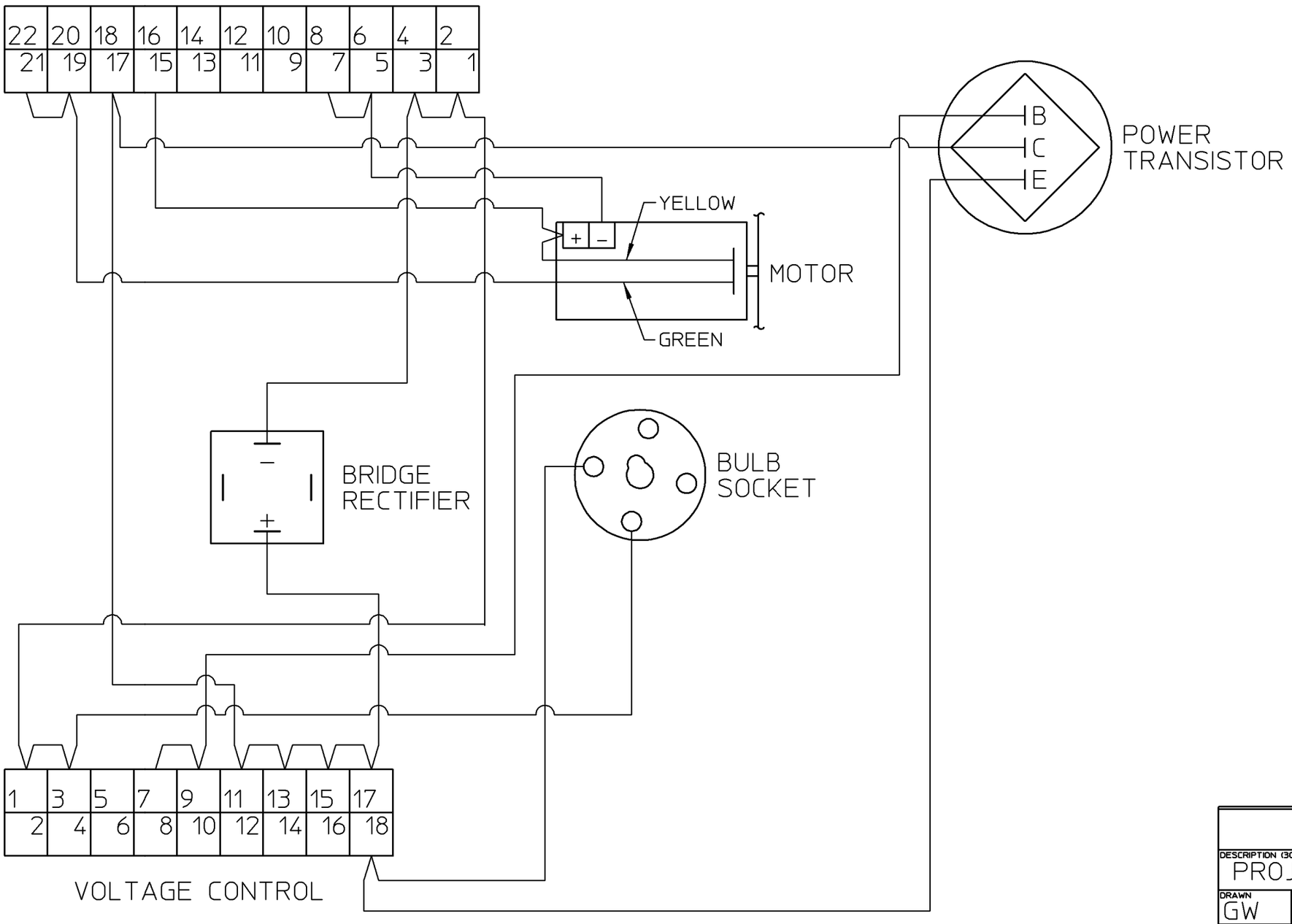

ALL WIRES WILL BE 18# AWG.

THIS DOCUMENT CONTAINS PROPRIETARY INFORMATION AND SUCH INFORMATION MAY NOT BE DISCLOSED TO OTHERS FOR ANY PURPOSE OR USED FOR MANUFACTURING PURPOSES WITHOUT THE WRITTEN PERMISSION OF FAIRMONT TAMPER.

FOR REFERENCE ONLY

DESCRIPTION (30)
PROJECTOR WIRE DIAGRAM

DRAWN GW	DATE 3/25/85	MACHINE TYPE 24V MACHINES
CHECKED	DATE	
APP-ENG RSM	DATE 4/30/85	
SHEET 1	CONT. ON —	
LAST ECR. 6696. 1	CHECKED dvan DATE 2-Mar-94	ENG.DWG.NO. A6118X01

Fairmont Tamper™
2401 Edmund Road-Box 20
Cayce-West Columbia,
South Carolina 29171-0020
(803) 822-9160

NOTES:

1. APPLY ONE DROP OF BLUE LOCTITE TO ALL THREADS

2. WIRE M12 CONNECTOR, IT-6, TO 5 POSITION PLUG, IT-9, SEE CONNECTOR WIRING DETAIL

3. FOR REFERENCE, M12 CONNECTOR, IT-6, PINOUT:
   PIN 1 BROWN PIN 2 WHITE PIN 3 BLUE
   PIN 4 BLACK PIN 5 GRAY

4. TEST AFTER ASSEMBLY

6. CLOSED CELL FOAM FILLERS ARE NOT FASTENDED IN PLACE. ITEM 16 IS PLACED UNDER PCB ASSY AND ITEM 17 IS PLACED ON TOP OF PCB ASSY

8. PLACE O-RING, ITEM 20, IN GROOVE OF LENS HOOD, ITEM 4. APPLY DIELECTRIC GREASE, H5527Y06 TO O-RING AND PRESS ON LENS SHADES ITEM 21. LENS SHADES SHOULD BE ABLE TO ROTATE BUT NOT FREELY.

9. TORQUE TO 100 IN LB

10. TORQUE TO 50 IN LB

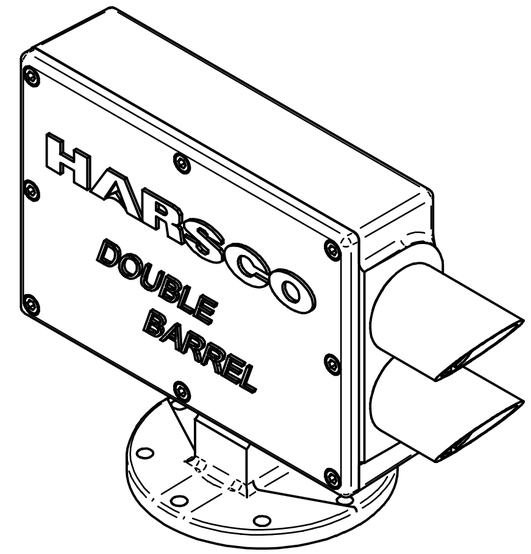

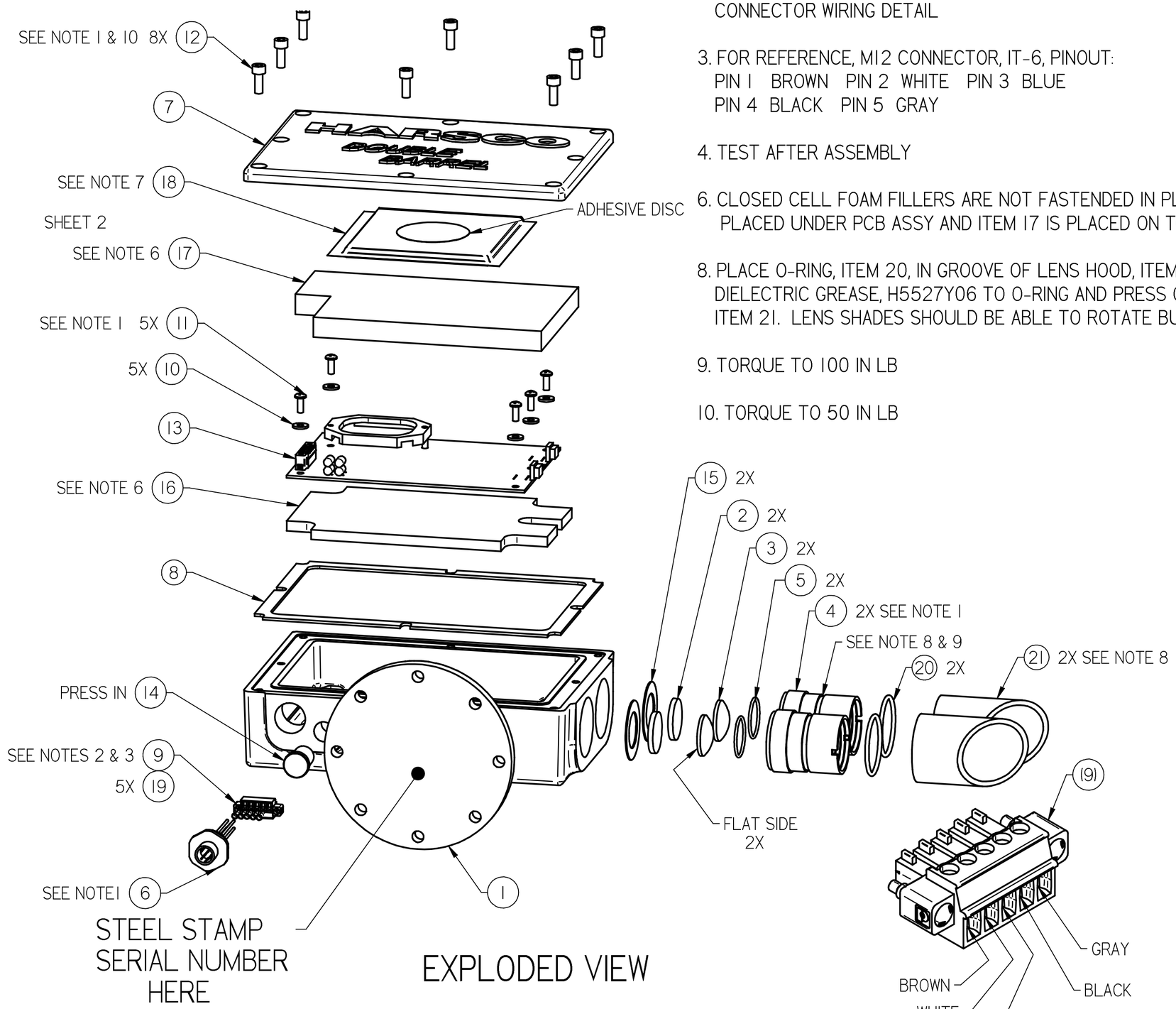

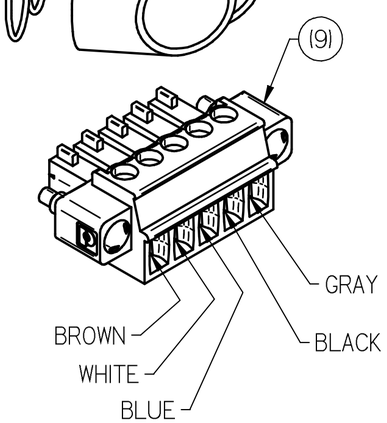

CONNECTOR WIRING DETAIL

ITEM NO,	PART NUMBER	DESCRIPTION	QTY
1	4007013	RECEIVER HOUSING MACHINING	1
2	4007019	OPTICAL FILTER	2
3	4007018	OPTICAL LENS	2
4	4007017	LENS HOOD	2
5	L410486	O-RING	2
6	4007021	CONNECTOR, M12 M 5 PIN, LEADS	1
7	4007015	RECEIVER COVER MACHINING	1
8	4010763	GASKET, FLAT COVER	1
9	A2289Y36	5 POSITION PLUG	1
10	A0059053	6 PLAIN FLAT WASHER STAINLESS	5
11	A0051043	6-32 X 3/8 PHMS STAINLESS PHILLIPS	5
12	A0041243	10-24 X 1/2 SOCHHCS STAINLESS	8
13	H6752XAD	PCB ASSY, RECEIVER	1
14	4007356	LED WINDOW	1
15	4008403	LENS CUSHION	2
16	4008946	FILLER, FOAM 1/4"	1
17	4008947	FILLER, FOAM 1/2"	1
18	4008955	DESICCANT PACKET	1
19	0-3250001-0-43	TERMINAL LUG	5
20	F015368	O-RING, -125	2
21	4010067	LENS SHADE	2

SOLID EDGE DRAWING

CONFIDENTIAL
© COPYRIGHT 2001 HARSCO TRACK TECHNOLOGIES. THIS DRAWING OR DOCUMENT IS THE PROPERTY OF HARSCO TRACK TECHNOLOGIES AND EMBODIES CONFIDENTIAL INFORMATION, TRADE SECRET INFORMATION, AND/OR KNOW-HOW THAT IS THE PROPERTY OF HARSCO TRACK TECHNOLOGIES. BY ACCEPTING THIS DRAWING OR DOCUMENT, THE RECIPIENT AGREES (1) NOT TO PROVIDE, OR OTHERWISE MAKE AVAILABLE, THE DRAWING OR DOCUMENT, OR ANY INFORMATION OR KNOW-HOW EMBODIED THEREIN, TO ANY THIRD PARTY AND (2) NOT TO REPRODUCE OR USE THE DRAWING OR DOCUMENT TO MANUFACTURE ANY APPARATUS OR DEVICE, WITHOUT THE PRIOR WRITTEN AUTHORIZATION OF HARSCO TRACK TECHNOLOGIES.

IMPLIED TOLERANCES
ALL DIMENSIONS ARE IN INCHES - TOLERANCE UNLESS OTHERWISE SPECIFIED

NOMINAL SIZE RANGE		INCH PLUS OR MINUS		NOMINAL SIZE RANGE		METRIC PLUS OR MINUS	
OVER	TO	2 PLACE DECIMAL	3 PLACE DECIMAL	OVER	TO	1 PLACE DECIMAL	2 PLACE DECIMAL
0	6	.03	.005	0	150	.8	.127
6	24	.04	.008	150	600	1.0	.203
24	-	.06	.010	-	600	1.5	.254

UNLESS OTHERWISE SPECIFIED ALL MACHINED SURFACES WILL HAVE;
A SURFACE FINISH OF 125 MICROINCHES
ANGULAR TOLERANCE OF ±.50°
CONCENTRICITY WITHIN .010

THIRD ANGLE PROJECTION

UNLESS OTHERWISE SPECIFIED ALL WELDS SHOULD ADHERE TO THE LATEST HTT WELDING SPECIFICATION 101

CHANGE	R/L	REVISION		DATE
		PLEASE SEE REVISION HISTORY SHEET		
13081.25	D	ADDED ITS-20 & 21 & NOTE 8	JBR/AML	9/22/05
100092	E	IT-8 WAS 4007020. IT-20 WAS L41740. DEL NOTE 5.	JBR/AML	12/1/05
101597	F	ADDED NOTES 9 & 10	HW/JBR	02/06/08
105138	G	VISUAL UPDATE ONLY	LR/JBR	01/29/10

Description: RECEIVER, DOUBLE BARREL
Drawing Number: ----------
Machine Type: ALL TAMPERS
Model: 4007012.asm
Drawn: JBR
Date Drawn: 9/7/04
Weight: 7.720 lbm
Scale: 1:2
APVD Desg: K.Koon
APVD ChEng: AML
Mat'l

HTT
Harsco Track Technologies
Harsco
Columbia, SC

Part Number: 4007012
Size: C
Sheet: 1 of 2

Plotted by Iroldan on 9/9/2010 4007012.dft

NOTES:
7. INNER SURFACE OF COVER MUST BE CLEAN AND DRY. ATTACH DESICCANT PACKET TO CENTER OF COVER USING THE ADHESIVE DISC THAT COMES ON THE PACKET. SEE PICTURE BELOW.

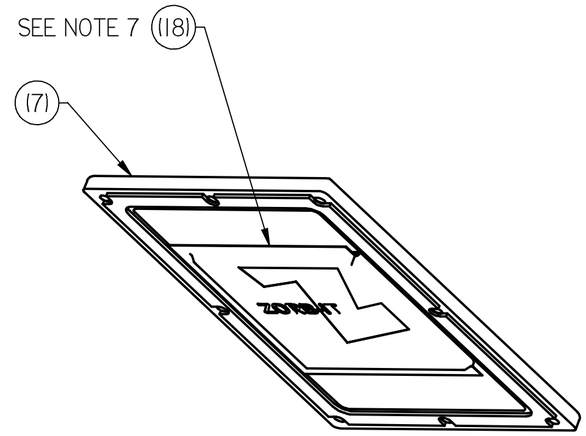

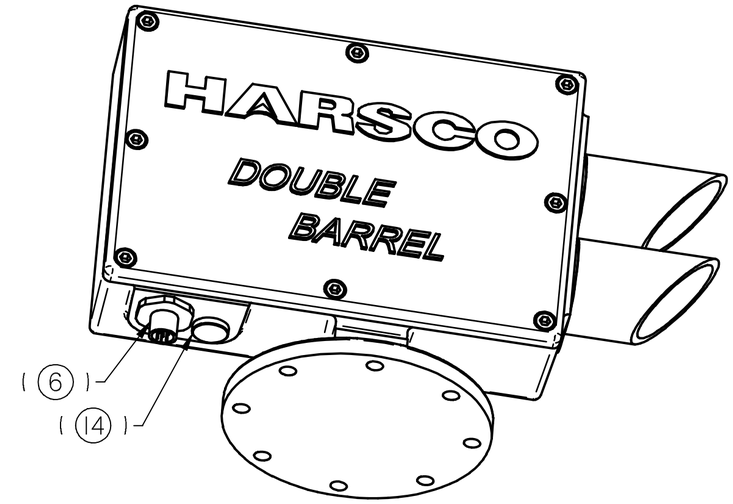

RED INDICATOR ILLUMINATES WHEN RECEIVER SEES PROJECTOR LIGHT. GREEN INDICATES POWER ON

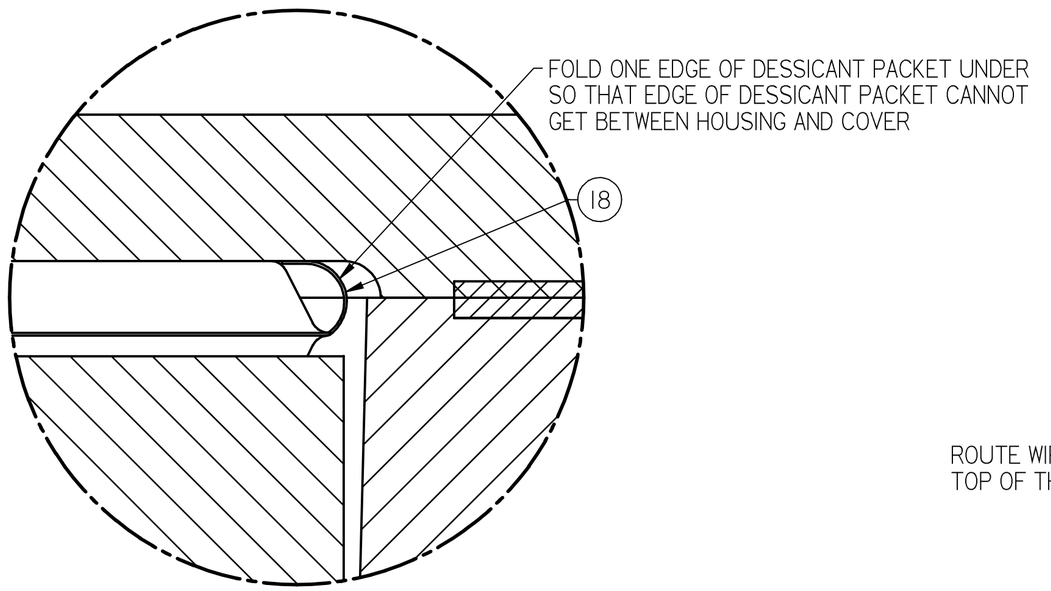

DETAIL B

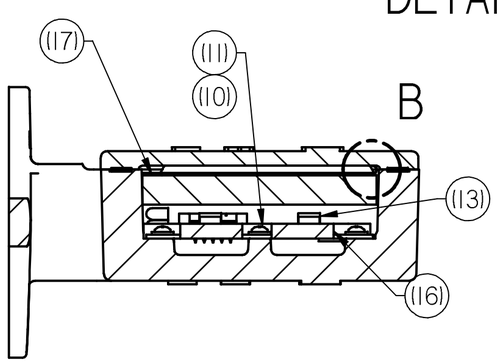

SECTION A-A

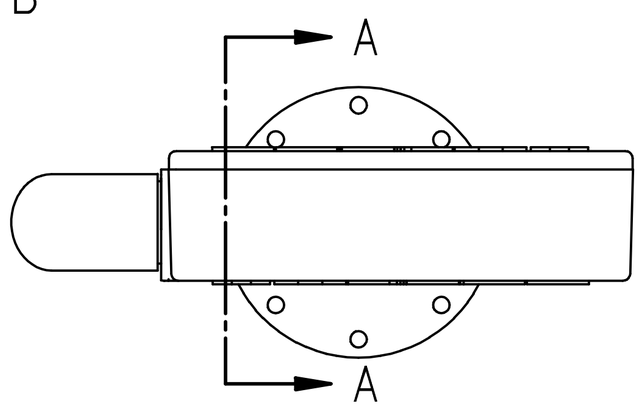

TOP VIEW

ROUTE WIRE FROM M12 CONNECTOR OVER THE TOP OF THE 1/2" CLOSED CELL FOAM FILLER

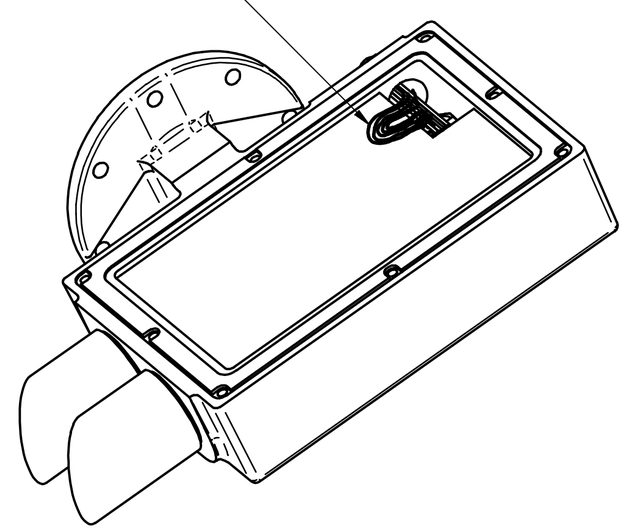

SHOWN WITH COVER REMOVED

SOLID EDGE DRAWING

CONFIDENTIAL
© COPYRIGHT 2001 HARSCO TRACK TECHNOLOGIES. THIS DRAWING OR DOCUMENT IS THE PROPERTY OF HARSCO TRACK TECHNOLOGIES AND EMBODIES CONFIDENTIAL INFORMATION, TRADE SECRET INFORMATION, AND/OR KNOW-HOW THAT IS THE PROPERTY OF HARSCO TRACK TECHNOLOGIES. BY ACCEPTING THIS DRAWING OR DOCUMENT, THE RECIPIENT AGREES (1) NOT TO PROVIDE, OR OTHERWISE MAKE AVAILABLE, THE DRAWING OR DOCUMENT, OR ANY INFORMATION OR KNOW-HOW EMBODIED THEREIN, TO ANY THIRD PARTY AND (2) NOT TO REPRODUCE OR USE THE DRAWING OR DOCUMENT TO MANUFACTURE ANY APPARATUS OR DEVICE, WITHOUT THE PRIOR WRITTEN AUTHORIZATION OF HARSCO TRACK TECHNOLOGIES.

IMPLIED TOLERANCES
ALL DIMENSIONS ARE IN INCHES - TOLERANCE UNLESS OTHERWISE SPECIFIED

NOMINAL SIZE RANGE		INCH PLUS OR MINUS		NOMINAL SIZE RANGE		METRIC PLUS OR MINUS	
OVER	TO	2 PLACE DECIMAL	3 PLACE DECIMAL	OVER	TO	1 PLACE DECIMAL	2 PLACE DECIMAL
0	6	.03	.005	0	150	.8	.127
6	24	.04	.008	150	600	1.0	.203
24	-	.06	.010	-	600	1.5	.254

UNLESS OTHERWISE SPECIFIED ALL MACHINED SURFACES WILL HAVE:
A SURFACE FINISH OF 125 MICROINCHES
ANGULAR TOLERANCE OF ± .50°
CONCENTRICITY WITHIN .010

THIRD ANGLE PROJECTION

UNLESS OTHERWISE SPECIFIED ALL WELDS SHOULD ADHERE TO THE LATEST HTT WELDING SPECIFICATION 101

CHANGE	R/L	REVISION		DATE
		PLEASE SEE REVISION HISTORY SHEET		
13081.25	D	ADDED ITS-20 & 21 & NOTE 8	JBR/AML	9/22/05
100092	E	IT-8 WAS 4007020. IT-20 WAS L41740. DEL NOTE 5.	JBR/AML	12/1/05
101597	F	ADDED NOTES 9 & 10	HW/JBR	02/06/08
105138	G	VISUAL UPDATE ONLY	LR/JBR	01/29/10

Description: RECEIVER, DOUBLE BARREL
Drawing Number: ----------
Machine Type: ALL TAMPERS
Model: 4007012.asm
Drawn: JBR
Date Drawn: 9/7/04
Weight: 7.720 lbm
Scale: 1:2
APVD Desg: K.Koon
APVD ChEng: AML
Mat'l

HTT
Harsco Track Technologies
Harsco
Columbia, SC

Part Number: 4007012
Size: C
Sheet: 2 of 2

Plotted by lroldan on 9/9/2010 4007012.dft

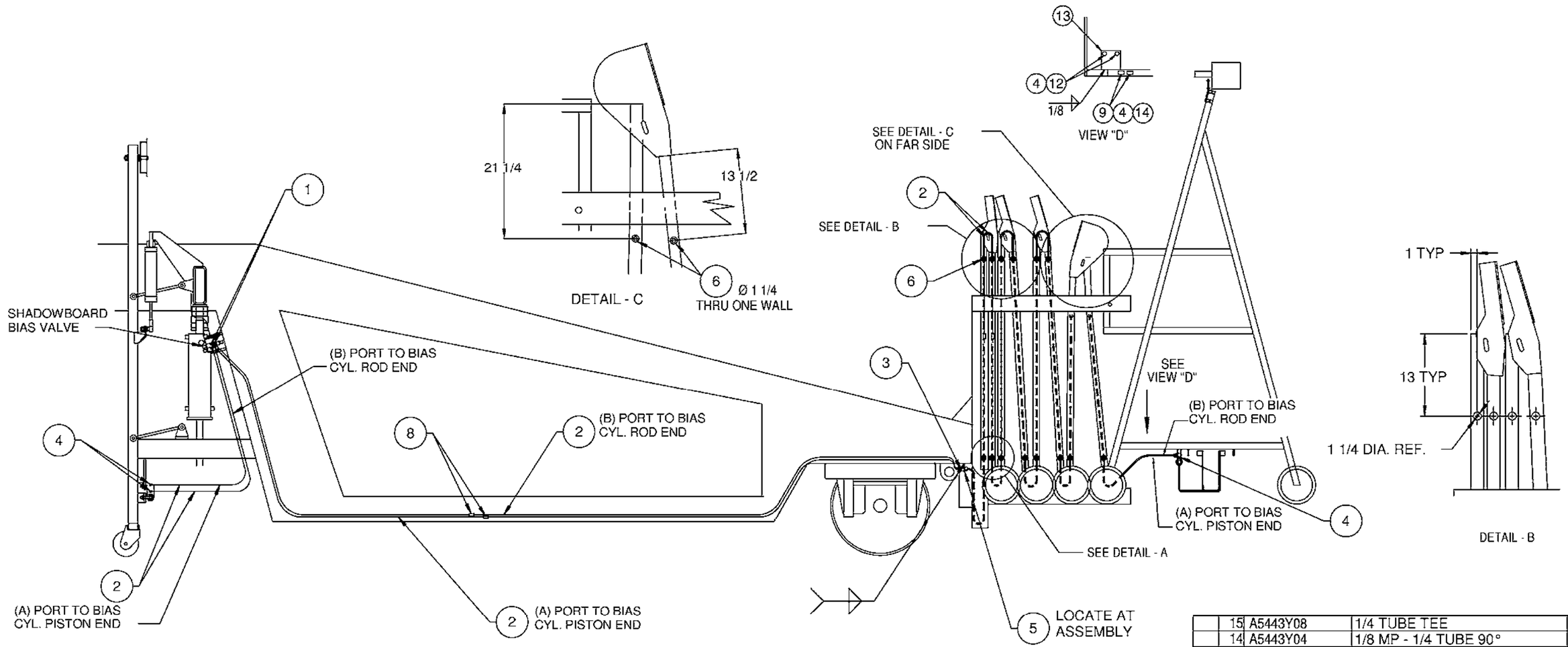

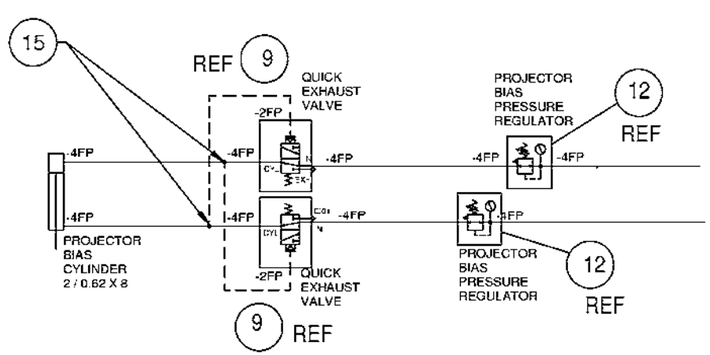

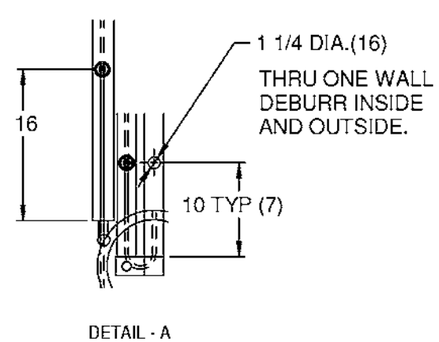

	15	A5443Y08	1/4 TUBE TEE	2
	14	A5443Y04	1/8 MP - 1/4 TUBE 90°	2
	13	C8434T06	TWO HOLE BRKT	1
	12	L422845	PRESS. REGULATOR	2
	~~11~~	~~D2479X01~~	~~GUARD~~	~~2~~
	~~10~~	~~L423299~~	~~ADAPTER 1/8 MP 1/4 MP~~	~~2~~
	9	0-3413001-0-04	PILOT OPER AIR VALVE	2
	8	A5443Y19	TUBE 1/4 UNION	8
	~~7~~	~~A5443Y03~~	~~TUBE 1/4 - 1/8 MP~~	~~2~~
	6	0-3201001-0-16	GROMMET 1 5/8 ODX7/8 ID	16
	5	A7385T83	TWO HOLE BRACKET	1
	4	A5443Y07	TUBE 1/4 - 1/4 MP 90°	12
	3	A5443Y11	TUBE UNION 1/4 TUBE	2
	2	L423607	TUBE 1/4 FT.	250
	1	A5443Y10	TUBE TEE 1/4 - 1/4 MP	2

CONFIDENTIAL
© COPYRIGHT 2001 HARSCO TRACK TECHNOLOGIES. THIS DRAWING OR DOCUMENT IS THE PROPERTY OF HARSCO TRACK TECHNOLOGIES AND EMBODIES CONFIDENTIAL INFORMATION, TRADE SECRET INFORMATION, AND/OR KNOWHOW THAT IS THE PROPERTY OF HARSCO TRACK TECHNOLOGIES. BY ACCEPTING THIS DRAWING OR DOCUMENT, THE RECIPIENT AGREES (1) NOT TO PROVIDE OR OTHERWISE MAKE AVAILABLE THE DRAWING OR DOCUMENT, OR ANY INFORMATION OR KNOWHOW EMBODIED THEREIN, TO ANY THIRD PARTY AND (2) NOT TO REPRODUCE OR USE THE DRAWING OR DOCUMENT TO MANUFACTURE ANY APPARATUS OR DEVICE, WITHOUT THE PRIOR WRITTEN AUTHORIZATION OF HARSCO TRACK TECHNOLOGIES.

SOLID EDGE DRAWING

IMPERIAL DIMENSIONS

CHANGE	BY	REVISION	DATE
100537	F	REV 6 WAS L41722	8-13-07

Description: PROJECTOR AIR BIAS KIT
Drawing Number: ----------
Machine Type: MARK IV
Model: C9396WAA.dft
Scale: 1/16
Drawn: ddalk 3/15/07
Approved: JBR
Approved: JBR
Weight:
Date:

HTT
Harsco Track Technologies
Harsco
Columbia, SC

Part Number: C9396WAA
Size: D
Sheet: 1 of 1

Plotted by dclark on 3/15/2007 C9396WAA.dft

ENG. DWG. NO. A1810V

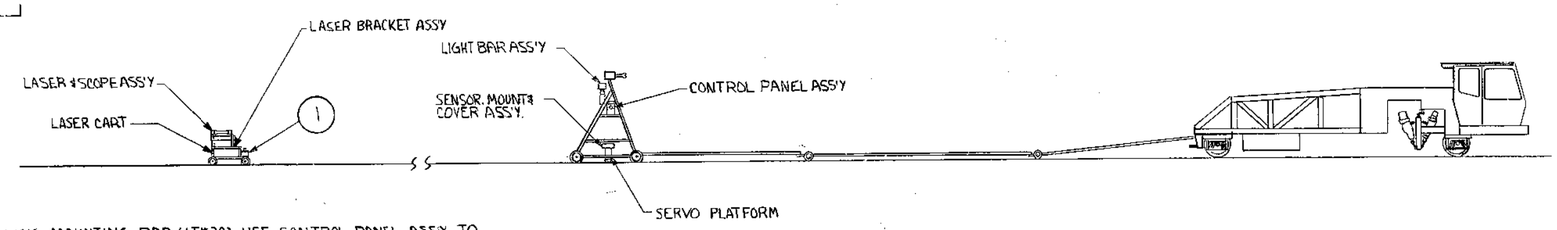

NOTES:

1. AFTER INSTALLING MOUNTING BAR (IT#30), USE CONTROL PANEL ASSY TO LOCATE MOUNTING BAR (IT#26) FOR WELDING.
2. USE LIGHT BAR MOUNTING BRACKETS AS TEMPLATE TO DRILL 11/32 DIA(4) HOLES IN PROJECTOR BUGGY SIDE FRAME MEMBERS.

2A. CENTER LIGHT BAR ON PROJECTOR BUGGY AND USE MOUNTING BRACKETS AS TEMPLATE TO DRILL I(.212) DIA. HOLES(4) IN LIGHT BAR FOR MOUNTING.

3. WELD SLOT IN EYE BOLT CLOSED AFTER INSTALLING CHAIN.
4. POSITION PROJECTOR TUBE IN STORAGE BRACKETS (IT# 52+53). USE IT#52 AS TEMPLATE TO DRILL A 3/8 DIA. HOLE THRU PROJECTOR TUBE.
5. USE LASER CART TO LOCATE STORAGE BAR (IT#19). USE STORAGE BAR AS TEMPLATE TO DRILL 29/64 DIA. HOLES(4) IN PROTECTOR BUGGY.
6. FOR REPLACEMENT PARTS SEE 0-2011400-0-02.
7. USE EXISTING TUBE IN PROJECTOR BUGGY FOR "C" SERIES MK IV CHANGE

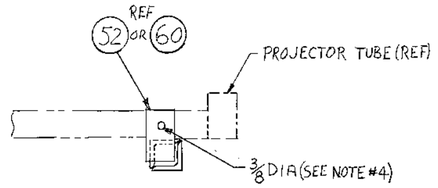

PROJECTOR TUBE REWORK

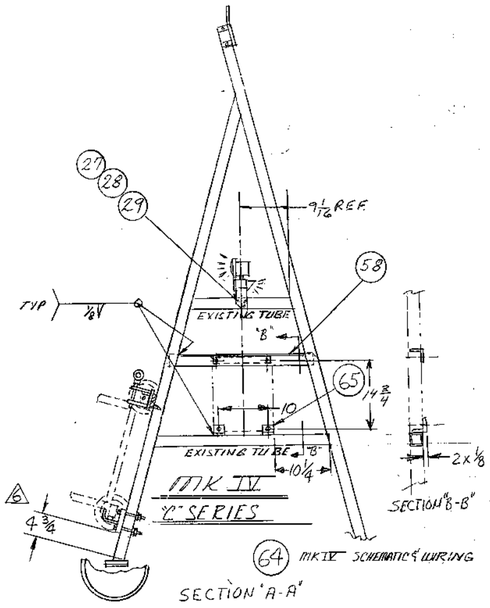

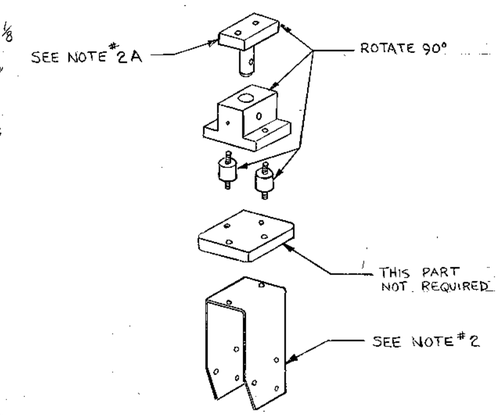

DETAIL-B

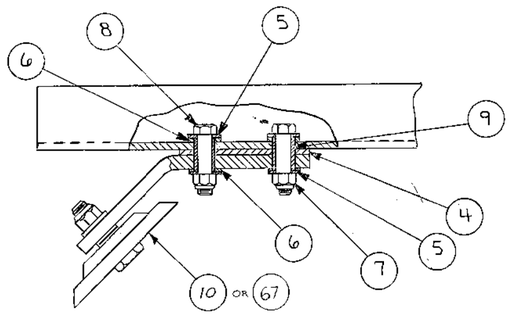

DETAIL C

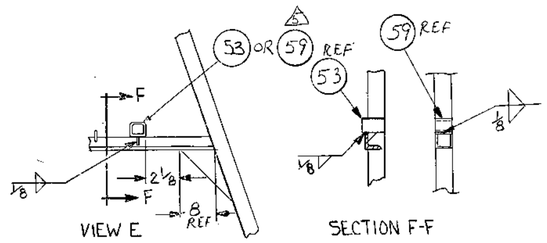

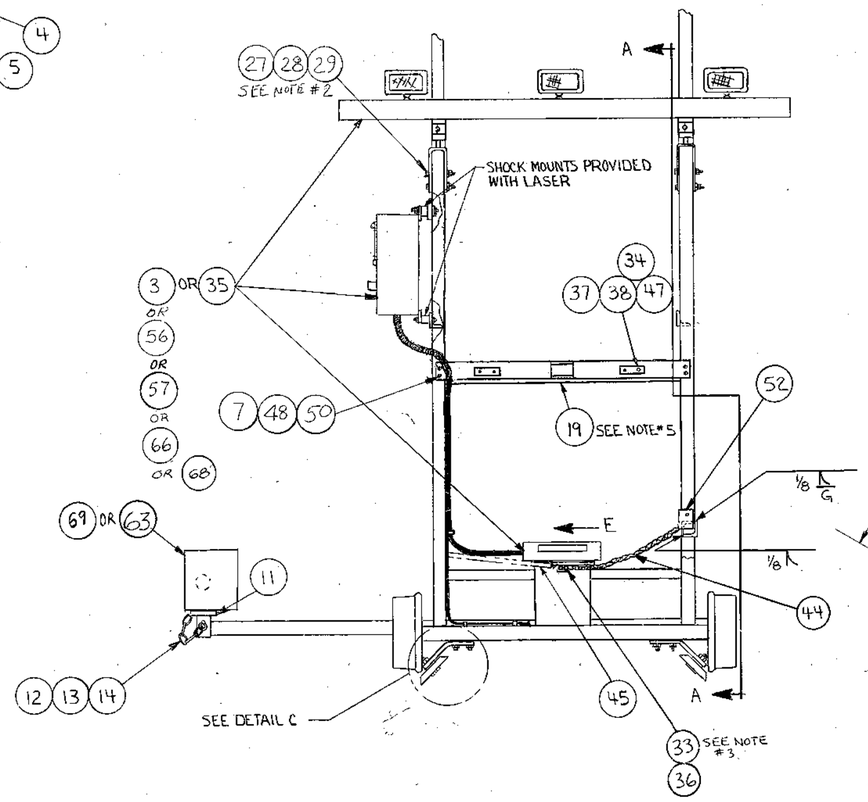

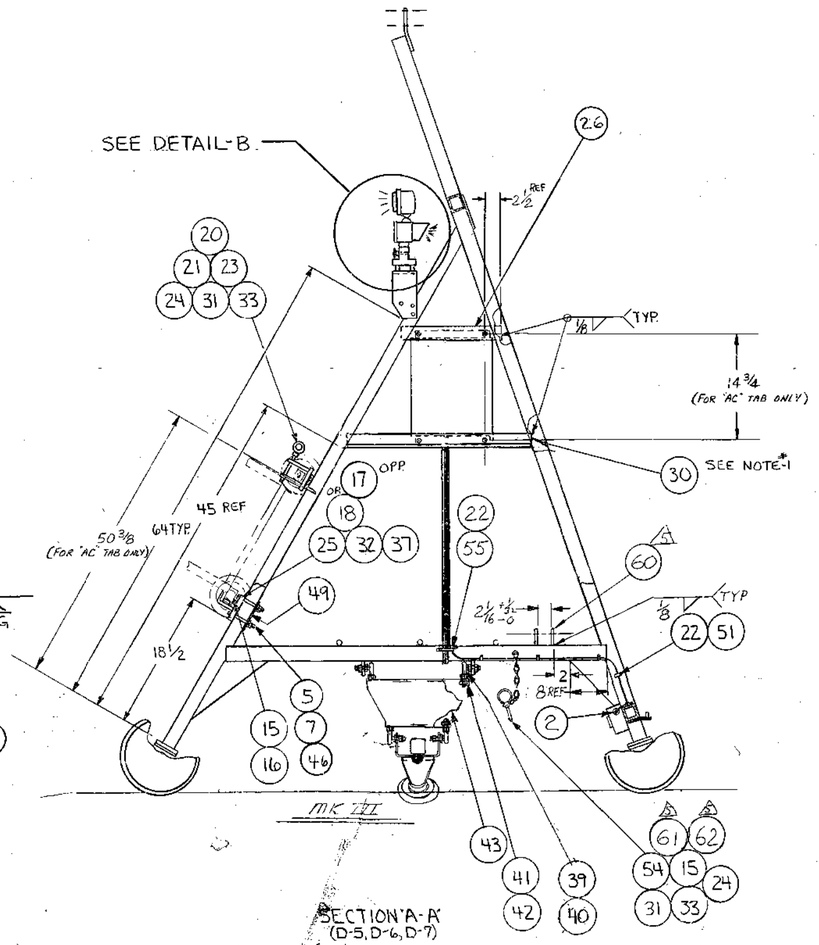

REVISIONS

NO	DEP	DESCRIPTION	ZONE	DR	CK	APP	MF
1	[illegible]	RELEASED		BK	[illegible]		
2	[illegible]	REVISED NOTE-2; RELOCATED IT-36; DELETED SECTION 3-B; ADDED DETAIL-B; DELETED 4" LOC. DIM. FOR PROT. TUBE; 45 REF WAS 45 TYP	D-7 D-6 D-5 D-4 F-6	JOC	[illegible]	[illegible]	
3	[illegible]	ADDED ITEM SUMMARY		KS	[illegible]		
4	[illegible]	ADDED IT 68		RM	RA	[illegible]	
5	[illegible]	ADDED IT. 59-63. TOOD' [illegible]		AO	[illegible]	[illegible]	
6	[illegible]	LOWERED LINER BUGGY MTG. BRKTS TO 4 3/4 FOR "C" & MK IV 11 JUL 94	G4	AO	[illegible]	[illegible]	
7		NO CHG					
8	[illegible]	ADDED IT # 69, LASER [illegible] CONTROL BOX W.S. MOUNTED BETWEEN BUGGY SIDE FRAMES	H4	AO	[illegible]	[illegible]	
9	[illegible]	ADDED IT # 65 [illegible]	H3	AO	[illegible]	[illegible]	
10		NO CHANGE					
11	11705	PICTORIAL CHANGE [illegible]	G-7	TON		JBR	
12	13008 [illegible]	DEL IT-10 + ADDED IT-68		RJG	JOC	JOC	
13	13013 [illegible]	REINSTATED IT-10		RJG	JOC	JOC	
R		NO CHANGE					

THIS DOCUMENT CONTAINS PROPRIETARY INFORMATION AND SUCH INFORMATION MAY NOT BE DISCLOSED TO OTHERS FOR ANY PURPOSE OR USED FOR MANUF. OR TURNING PURPOSES WITHOUT THE WRITTEN PERMISSION OF TAMPER.

3rd ANGLE PROJECTION

DO NOT SCALE

WEIGHT lbs.

DESCRIPTION (30): LASER LINER KIT

MACHINE TYPE: MK III, MK IV, "C" SERIES

DRAWN: B. Long 11/21/83

CHECKED: [illegible] 11-30-84

APP: JOC 11/21/84

Tamper Inc., Cannon Corp. 2401 Edisto Road, West Columbia, South Carolina 29169, Tel. (803) 794-9100, Telex 753403

SIZE: A SHEET 1 OF 1 DWG. NO. A1810V

SCANNED
REVISION ____ OF THIS DRAWING HAS BEEN SCANNED INTO THE CADCAM DATA BASE.
INITIALS DATE

PARTS LIST

ITEM NO	PART NUMBER	LEG	DESCRIPTION (30)	AA	AB	AC	AD	AE	AF	AG	AH	AJ	AK
				QUANTITY									
1	0-3181001-0-01		BATTERY 12V	1	1	0	1	1	1	1	0	0	1
2	L40818		CONNECTOR	1	1	0	1	1	1	1	1	1	1
3	0-2407897-0-05		LASER RAIL ALIGNMENT SYS. (LESS LASER & SCOPE)	0	1	0	0	0	0	0	0	0	0
4	Z750036		INSULATING PLATE	2	2	0	2	2	2	0	2	2	2
5	A0060013		3/8 SAE WASHER	24	24	8	24	24	24	8	24	24	24
6	Z750057		INSULATING WASHER	16	16	0	16	16	16	0	16	16	16
7	L40387		ESNA NUT 3/8-16	20	20	12	20	20	20	12	20	20	20
8	A0036067		HEX HD. CAPSCR. 3/8-16x1 3/4	8	8	0	8	8	8	0	8	8	8
9	Z685611		INSULATING TUBE	8	8	0	8	8	8	0	8	8	8
10	0-2302071-0-04		BIAS WHEEL ASS'Y	2	2	0	2	2	0	0	2	2	2
11	Y690486.		ADAPTOR PLATE ASS'Y.	1	1	0	1	1	1	1	1	1	1
12	A0071007		#8-32x 1/2 SELF TAPPING ASS'Y	1	1	0	1	1	1	1	1	1	1
13	A0192T12		CHAIN 6" LG	2	2	0	2	2	2	2	2	2	2
14	L422001		PIP PIN	1	1	0	1	1	1	1	1	1	1
15	A0052068		FLAT HD. MACH. SCR. #10-24x1 1/2	4	4	4	3	4	3	3	3	3	3
16	0-1407820-0-01		LASER CART BUMPER	2	2	2	2	2	2	2	2	2	2
17	0-2304237-0-01		LASER CART SUPPORT WELD'T	1	1	1	1	1	1	1	1	1	1
18	0-2304237-0-02		LASER CART SUPPORT WELD'T	1	1	1	1	1	1	1	1	1	1
19	0-7304257-0-01		STORAGE BAR	1	1	1	1	1	1	1	1	1	1
20	0-3015004-0-08		HITCH PIN	1	1	1	1	1	1	1	1	1	1
21	A0192T13		CHAIN x 12" LG.	1	1	1	1	1	1	1	1	1	1
22	A0071115		SELF-TAPPING SCREW 1/4x1/2	4	4	0	4	4	4	4	4	4	4
23	A0060011		1/4 SAE WASHER	1	1	1	1	1	1	1	1	1	1
24	A0061008		LOCKWASHER 1/4	2	2	2	1	2	1	1	1	1	1
25	A0052020		FLAT HD. MACH. SCR #10-24x1"	4	4	4	4	4	4	4	4	4	4
26	A1801Y01		MOUNT BAR	1	1	2	0	1	0	0	0	0	0
27	A0036042		HEX HD. CAPSCR. 5/16-18x3	4	4	0	4	4	4	4	4	4	4
28	A0059002		WASHER 5/16 PLAIN	4	4	0	4	4	4	4	4	4	4
29	L40388		ESNA NUT 5/16-18	4	4	0	4	4	4	4	4	4	4
30	A1802Y01		MOUNT BAR	2	2	2	0	2	0	0	0	0	0
31	A0036005		HEX HD. CAPSCR 1/4-20x1"	3	3	3	2	3	2	2	2	2	2
32	0-1407822-0-01		WEAR PAD	2	2	2	2	2	2	2	2	2	2
33	A0055009		HEX NUT 1/4-20	3	3	3	2	3	2	2	2	2	2
			ASSEMBLY DESCRIPTION	56 1/2" GA. MK III, 88" REF. WITHOUT LASER & SCOPE	56 1/2 GA. MK III, 88" REF. BUGGY BRKT ASSY	56 1/2 GA. MK III 24 V.D.C. 88" REF.	56 1/2" GA. MK III W/SERVO PLAT. REMOTE CONT.	56 1/2 GA MK III, 88" REF	63 GA MK VI 94 1/2" REF	56 1/2 GA MK II WITHOUT LASER PURCHASED PARTS	56 1/2 GA MK II W/O SCOPE, BRKT CART	56 1/2 GA MK IV W/O SCOPE, BRKT CART	56 1/2 GA MKIV 24 VDC 88" REF. DBL BAR
			DER	14988	3956 SCR	4847 SCR	54882		119841	13013 .23	13013 .3	13173 .3	
			DR		RR	RH		TAF	JBR	RJG			
			CK	HH-84						JOC			
			APP							JOC			
			MF										

REVISIONS

NO	DER	DESCRIPTION	DR	CK	APP	MF
1	4/29/460	RELEASED AA				
2	DR 2016	IT-26 QTY WAS 2	JOC			
3	4/29/87	ADDED TAB AD	RJM			
4	5860, 11	IT. 30 QTY WAS 2 TAB AD	RJM			
5	5860 258	FOR AD TAB IT. 15 QTY WAS 4, IT. 24 QTY WAS 2, IT'S 31 & 33 QTY WAS 3 26 JAN 93	AD			
6		NO CHG				
7	7286.2	IT. #10 WAS 0-2302071-0-01 3 JAN 95	AD			
12	13013 .23	DEL. IT-10, ADDED TAB AH.	RJG	JOC	JOC	
13	13013 .32	REINSTATED IT-10, ADDED QTY 2 TO IT-10 TAB AA, AB, AD, AE, AH.	RJG	JOC	JOC	
R		NO CHANGE				

SCANNED

REVISION ____ OF THIS DRAWING HAS BEEN SCANNED INTO THE CADICAM DATA BASE.

INITIALS ____ DATE ____

ENG DWG NO: A1810V

SHEET 1 CONT ON 2

DESCRIPTION (30): LASER LINER KIT

DRAWN: B. Kemp DATE: 11/18/83

CHECKED: DATE: 1-30-84

APP: JOC DATE: 11/27/84

APP: DATE:

Tamper

Div. Cameron Corp
2401 Edmunds Road
West Columbia
South Carolina 29169
Tel (803) 794-9160
Telex 573423

PARTS LIST

ITEM NO	PART NUMBER	LEG	DESCRIPTION (30)	AA	AB	AC	AD	AE	AF	AG	AH	AJ	AK
				QUANTITY									
34	0-1407851-0-01		LASER CART BUMPER	2	2	2	2	2	2	2	2	2	2
35	0-2407897-0-02		LASER RAIL ALIGNMENT SYSTEM	1	0	0	0	0	0	0	0	0	0
36	A0066001		EYE BOLT	1	1	0	1	1	1	1	1	1	1
37	L41127		ESNA NUT #10-24	12	12	12	12	12	12	12	12	12	12
38	A0050063		RD. HD. MACH. SCR. #10-24x2 1/2	4	4	4	4	4	4	4	4	4	4
39	0-3011001-0-09		ESNA NUT 1/2-20	8	8	0	0	8	0	0	0	0	0
40	D4827Y01 ✓		MALE ROD END W/STUD	8	8	0	0	8	0	0	0	0	0
41	A0056009		1/2-20 HEX JAM NUT	16	16	0	0	16	0	0	0	0	0
42	A0061013 ✓		LOCKWASHER 1/2 MEDIUM	16	16	0	0	16	0	0	0	0	0
43	X763526-003		CRADLE BRACKET	2	2	0	0	2	0	0	0	0	0
44	A0192T17		CHAIN 2FT LG	1	1	0	1	1	1	1	1	1	1
45	L410356		SPRING	4	4	0	4	4	4	4	4	4	4
46	A0036085		HEX HD CAPSCR. 3/8-16x3 1/2	8	8	8	8	8	8	8	8	8	8
47	A0060006		#10 SAE WASHER	12	12	12	12	12	12	12	12	12	12
48	A0059003		3/8 PLAIN WASHER	4	4	4	4	4	4	4	4	4	4
49	0-1407821-0-02		BOLT PLATE	2	2	2	2	2	2	2	2	2	2
50	A0036072		HEX HD. CAPSCR. 3/8-16x3	4	4	4	4	4	4	4	4	4	4
51	L40346		CLAMP	5	5	0	5	5	5	5	5	5	5
52	0-2304443-0-01		STORAGE BRACKET	1	1	1	0	1	0	0	0	0	0
53	0-2408085-0-01		STORAGE BRACKET	1	1	1	0	1	0	0	0	0	0
54	L425851		PIP PIN 3/8x2 5/8 LG.	1	1	1	1	1	1	1	1	1	1
55	L422323		CLAMP	1	1	0	1	1	1	1	1	1	1
56	0-2407897-0-06		LASER RAIL ALIGNMENT SYSTEM	0	0	0	1	0	0	0	0	0	1
57	0-2407897-0-10		LASER RAIL ALIGNMENT SYSTEM	0	0	0	0	1	0	0	0	0	0
58	D6028Y01		ANGLE MOUNT	0	0	0	1	0	1	1	1	1	1
59	C8830T23		TUBING. (2x2x1/8x2)	0	0	0	1	0	1	1	1	1	1
60	C6100T17		EYE (1/4x2x2)	0	0	0	2	0	2	2	2	2	2
61	A0036011		1/4-20x2 1/2 HH CAPSCR	0	0	0	1	0	1	1	1	1	1
62	L40237		ESNA NUT 1/4-20	0	0	0	1	0	1	1	1	1	1
63	0-2100861-0-04		LINING PROJECTOR	0	0	0	1	0	1	0	1	0	0
64	G7744WAA		LASER ALIGNMENT KIT	0	0	0	0	0	1	0	0	0	0
65	D6029Y01		MOUNT LEG	0	0	0	2	0	2	2	2	2	2
66	0-2407897-0-12		LASER RAIL ALIGNMENT SYSTEM	0	0	0	0	0	1	0	0	0	0
				56½ GA. MK III .88" REF	56½ GA. MK III .88" REF WITHOUT LASER & SCOPE	BUGGY BRTS. & MK III	56½ GA. MK III	56½ GA. MK III, 88" REF W/SECOND PART, REMOTE CONT.	63 GA MK VI, 94½" REF	56½ GA MK III, 88" REF W/O SCOPE BRKT CART	56½ GA MK IV 88" REF W/O SCOPE BRKT CART	56½ GA MKIII WITHOUT LASER PURCHASED PARTS	56½ GA MKIV 24 VOC 88" REF OBL BAR

REVISIONS

NO	DER	DESCRIPTION	DR	CK	APP	MF
1	74460	RELEASED AA				
2	ER 2016	IT-44 PT# WAS A0192T08; IT-45 QTY WAS 2	JOK		AMX	
3	ECN 4847	ADDED TAB AD & ITEM # 56	RJM			
4	5860.11	ADDED IT. 58				
5	5860 258	IT. 52 & 53 QTY WAS 1 FOR AD TAB ADDED ITS. 59-63. 26 JAN 93	AO			
7		NO CHG.				
8	7405.1	ADDED IT. #64 21 FEB 95	AO		AMX	
9	7430.1	IT. #58 WAS C 7145Y01 9 MAR 95 ADDED IT. # 65	AO		AMX	
10	11408.1	IT. 64 WAS D5932X01 LASER SCH. + WIRING.	E.P.		NG	
11	11705.1	IT. 39 WAS QTY 8 ON TABS AD & AF. IT 40 WAS L424589 QTY WAS 8 ON TABS AD & AF. IT. 41 WAS A0041144, QTY WAS 8 ON TABS AD, AF. IT. 42 WAS QTY 8 ON TABS AD & AF. IT. 43 WAS X763526-001 QTY WAS 2 ON TABS AD & AF	TCM 9-28-94		JBR	
12	13013.23	ADDED TAB AH	PJG	JOC	JOC	
P	13105.5	IT-64 TABS AD, AG & AH, QTY WAS 1.	CP	WB	WB	
R		NO CHANGE.				

ASSEMBLY DESCRIPTION

	AA	AB	AC	AD	AE	AF	AG	AH	AJ	AK
DER	1488	ECN 4847	ECN 3426	ECN 4847	5948.2		11784.1	13013 .23	13013 .23	13173 .3
DR		RK	RJM	RJM	RJM SHAW	TAF	JBR	RJM	RJM	RJM
CK	11-17-94		RJM	RJM	RJM					
APP		AMX		AMX		AMX	AMX	JOC		
MF										

Tamper

Div Canron Corp
2401 Edmond Road
West Columbia
South Carolina 29169
Tel (803) 794-9160
Telex 573423

ENG DWG NO: A1810V
SHEET 2 CONT ON 3
DESCRIPTION (30): LASER LINER KIT
DRAWN: B. Long DATE: 11/18/83
CHECKED: DATE: 1-30-84
APP: JOC
DATE: 11/27/84
APP
DATE

PARTS LIST

ITEM NO	PART NUMBER	LEG	DESCRIPTION (30)	AA	AB	AC	AD	AE	AF	AG	AH	AJ	AK
				QUANTITY									
67	0-2302071-0-06		BIAS WHEEL ASSY 60°	0	0	0	0	0	2	0	0	0	0
68	0-2407397-0-15		RAIL LASER SYSTEM	0	0	0	0	0	0	0	1	1	0
69	0-2100861-0-09		LINING PROJECTOR	0	0	0	0	0	0	0	0	1	1

ASSEMBLY IDENTIFIER

	AA	AB	AC	AD	AE	AF	AG	AH	AJ	AK
	56½ GA MKIII, 88" REF	56½ GA MKIII, 88" REF W/O LASER + SCOPE	56½ GA MKIII BUGGY BELTS ONLY	56½ GA MKIII 24 VDC 88" REF	56½ GA MKIII, 88" REF W/SERVO PLATE REMOTE C.	63 GA MK VI, 94½" REF	LASER PURCHASED PARTS	56½ GA MKIV WITHOUT W/O SCOPE, BRKT, CART	56½ GA MKIV, 88" REF W/O SCOPE, BRKT, CART	56½ GA MKIV DBL BAR 88" REF

ENG DWG NO: A1810V
SHEET: 3
CONT ON: ~
DESCRIPTION (30): LASER LINER KIT
DRAWN: B. LONG
DATE: 18 Nov '83
CHECKED: DGV
DATE: 30 Nov '84
APP: JO'C
DATE: 27 Nov '84
APP:
DATE:

REVISIONS

NO	OER	DESCRIPTION	DR	CK	APP	MF
10		NEW RELEASE	TAF		JO'C	
12	13013 .23	ADDED IT-68 & TAB AH, TABS AA, AB, AD + AE QTY-IT-67 WAS 0.	RJG	JO'C	JO'C	
13	13013 .32	TABS AA, AB, AD, AE, AH QTY IT-67 WAS 2.	RJG	JO'C	JO'C	
Q	100053	IT-69 WAS 0-2100861-0-10 ON TABS AJ & AK	GW	JBR	JBR	
R	100060	NO CHG TO DWG (PRODUCT STRUCTURE ONLY)	GW			

SHEET 3 CONT ON ~ ENG DWG NO A1810V

ASSEMBLY DESCRIPTION

	AA	AB	AC	AD	AE	AF	AG	AH	AJ	AK
OER	SCR 1488		SCR 3436	SCR 4847	5548 .2	11479 .16	11981.1	13013 .23	13081 .23	13173 .3
DR			'R	R.M	D SHEAR	TAF	JBR	RJG	GW	GW
CK	DGV	13-17-84	DGV	DGV	DGV	LW		JO'C		
APP			AML		AML			JO'C		
MF										

SCANNED
REVISION ____ OF THIS DRAWING HAS BEEN SCANNED INTO THE CADCAM DATA BASE.
INITIALS
DATE

Tamper
Div. Canron Corp.
2401 Edmund Road
West Columbia
South Carolina 29168
Tel (803) 794-9160
Telex 573423

PARTS LIST

ITEM NO	PART NUMBER	LEG	VENDOR PART No.	DESCRIPTION (30)	01	02	03	04	05	06	07	08	09	10	11
					ASSEMBLY IDENTIFIER / QUANTITY										
1	0-1407897-0-01		4000	RAIL ALIGNMENT SYSTEM	1	1	1	1	0	1	1	0	1	1	1
2	0-1407897-0-02		4010	SENSOR ASS'Y	1	1	1	1	1	1	1	0	1	1	1
3	0-1407897-0-03		4040	CONTROL PANEL ASS'Y (127VAC)	1	1	1	0	1	0	0	0	0	0	0
4	0-1407897-0-04		4015	LIGHT BAR ASS'Y	1	1	1	1	1	1	1	0	1	1	1
5	0-1407897-0-05		35696-01	LASER BRACKET ASSY	1	1	1	1	1	1	1	0	1	1	1
6	0-1407897-0-06		35697-01	SERVO PLATFORM	1	0	0	0	0	0	0	0	0	0	0
7	0-1407897-0-07		35697-02	SERVO PLATFORM	0	1	0	0	1	0	0	0	0	1	0
8	0-1407897-0-08		35689	R.R. LASER CART ASSY	1	1	0	0	1	1	1	0	0	1	1
9	0-1407897-0-09		36780-01	SERVO PLATFORM	0	0	1	0	0	0	0	0	0	0	0
10	0-1407897-0-10		36749-01	R.R. LASER CART ASS'Y	0	0	1	1	0	0	0	0	0	0	0
11	0-1407897-0-11		36780-02-24V	SERVO PLATFORM	0	0	0	1	0	0	0	0	0	0	0
12	0-1407897-0-12		4030	CONTROL PANEL ASS'Y (24VOLT)	0	0	0	1	0	1	1	0	1	0	0
13	0-1407897-0-13		35698-02	SERVO PLATFORM (PLASSER)	0	0	0	0	0	0	1	0	0	0	0
14	0-1407897-0-14		35697-04	SERVO PLATFORM 88 REF 24V	0	0	0	0	0	1	0	0	1	0	1
15	0-1407897-0-15		1-4000H	RAIL ALIGNMENT SYSTEM	0	0	0	0	0	0	0	1	0	0	0
16	0-1407897-0-16		1-4010H	SENSOR ASSY.	0	0	0	0	0	0	0	1	0	0	0
17	0-1407897-0-17		1-4030	CONTROL PANEL ASSY. 24VDC	0	0	0	0	0	0	0	1	0	0	0
18	0-1407897-0-18		1-35698-02	SERVO PLATFORM ASSY.	0	0	0	0	0	0	0	1	0	0	0
19	0-1407897-0-19		1-35689-01	LASER CART ASSY.	0	0	0	0	0	0	0	1	0	0	0
20	0-1407897-0-20		1-4015	LIGHT BAR	0	0	0	0	0	0	0	1	0	0	0
21	0-1407897-0-21		1-35696-01	LASER BRACKET	0	0	0	0	0	0	0	1	0	0	0
22	0-1407897-0-22		LATER	R.R. LASER CART ASS'Y 1 METER	0	0	0	0	0	0	0	0	1	0	0
23	0-1407897-0-23		4040SP	CONTROL PANEL ASSY, 127V W/SERVO PLAT. REMOTE CONT.	0	0	0	0	0	0	0	0	0	1	0
24	0-1407897-0-24		4030SP	CONTROL PANEL ASS'Y, 24V (4030 WIRED FOR REMOTE CONT.)	0	0	0	0	0	0	0	0	0	0	1
25	C5270P14		36102-01	REMOTE CONTROL (FOR SERVO PLATFORM)	0	0	0	0	0	0	0	0	0	0	1
26	0-1407897-0-26		35697-04-S	SERVO PLATFORM 44 1/2 REF 24V 63 GA	0	0	0	0	0	0	0	0	0	0	0
27	0-1407897-0-27		35689-01-SB	R.R. LASER CART ASSY 63 GA	0	0	0	0	0	0	0	0	0	0	0
28	0-1407897-0-28		4040R	CONTROL PANEL ASSY 127V	0	0	0	0	0	0	0	0	0	0	0
29	C5270P99		33848-01	REMOTE CONNECTOR	0	0	0	0	0	0	0	0	0	0	0

REVISIONS

NO	DER	DESCRIPTION	DR	CK	APP	MF
5	SER 1462	RELEASED. MADE SEPARATE PARTS LIST; ADDED -09 TAB	B.J.		AMJ	
6	SER 4347	[illegible] -09,	RJ			
7	5288,104	IT-5 VENDOR NO WAS 35696	AMJ			
8	5548,2	ADDED TAB -10	AMJ			

ASSEMBLY DESCRIPTION

	01	02	03	04	05	06	07	08	09	10	11
	99" REF 56½ GA 127V	88" REF 56½ GA 127V	91¾ REF 42GA 127V	80¾ REF 42GA 24V	88" REF 56½ GA 24V SLOPE ASSY, WITHOUT LASER & 88" REF 127V	88" REF 56½ GA 24V PLASSER	88" REF 56½ GA 24V PLASSER	56½ GA, R.LASER CAT 09 24V	24V 1 METER GA W/54½ GA SERVO PLAT. TO USE W/DIRE LINE	88" REF. 56½ GA, 127V W/SERVO PLAT. REMOTE CONT	R.R. "REF. 56½ GA, 24 VOLT WITH ASSIGNED CONTROL
DER	8 [illegible]	20308	81012	83069	SER 1462	SER 1603	SER 1603	SER 1462	5291/1	5291/1	7545
DR										Sheehy	
CK					Bm	Bm	Bm	Bm	B.R.		B. Rhodes
APP					AMJ	AMJ	AMJ	AMJ	AMJ	AMJ	AMJ
MF											

Tamper

Div. Gentran Corp
2401 Fomund Road
West Columbia
South Carolina 29169
Tel: (803) 794-9580
Telex: 5-3423

ENG DWG NO: 4 0-2407897-0
SHEET: 1
CONT ON: 1A
DESCRIPTION (30): LASER RAIL ALIGNMENT SYSTEM
DRAWN: B. Jones
DATE: 11/16/83
CHECKED
DATE
APP
DATE
APP
DATE: NOV 18/83

American Blueprint of Columbia

ENGS 7 38562

CONFIDENTIAL
© COPYRIGHT 2009 HARSCO. THIS DRAWING OR DOCUMENT IS THE PROPERTY OF HARSCO AND EMBODIES CONFIDENTIAL INFORMATION, TRADE SECRET INFORMATION, AND/OR KNOW-HOW THAT IS THE PROPERTY OF HARSCO. BY ACCEPTING THIS DRAWING OR DOCUMENT, THE RECIPIENT AGREES (1) NOT TO PROVIDE, OR OTHERWISE MAKE AVAILABLE, THE DRAWING OR DOCUMENT, OR ANY INFORMATION OR KNOW-HOW EMBODIED THEREIN, TO ANY THIRD PARTY AND (2) NOT TO REPRODUCE OR USE THE DRAWING OR DOCUMENT TO MANUFACTURE ANY APPARATUS OR DEVICE, WITHOUT THE PRIOR WRITTEN AUTHORIZATION OF HARSCO.

SOLID EDGE DRAWING

Item Number	Document Number	Title	Quantity
1	C1612X01	BIAS WHEEL BRACKET (60°)	1
2	Z685275	SPACER	3
3	C1695X01	BIAS WHEEL (60°)	1
4	Z685273	WHEEL AXLE	1
5	L41764	LOCKNUT, 3/4-10, PLATED	1
6	L40153	BALL BEARING	1
7	L410291	RETAINING RING	1

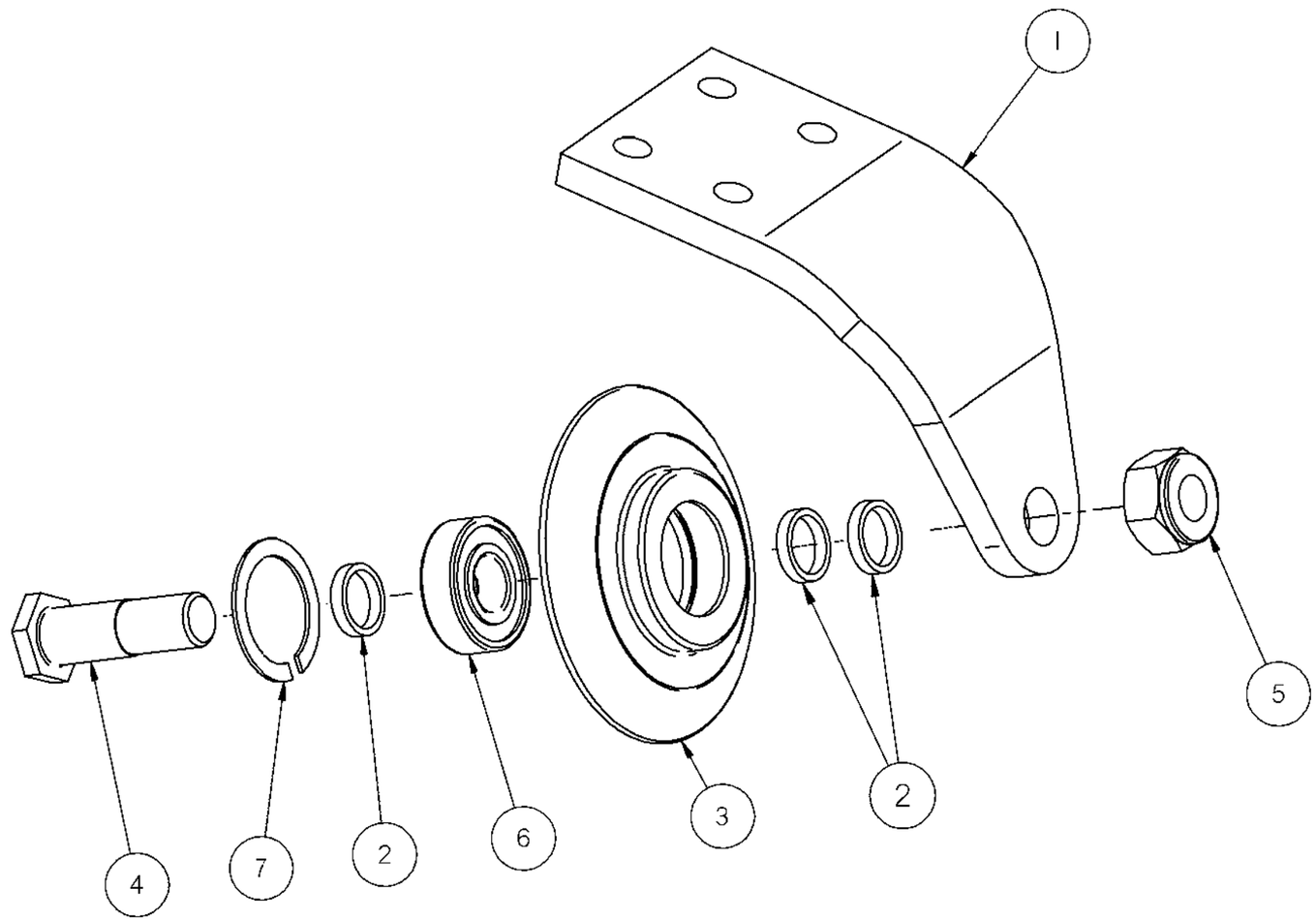

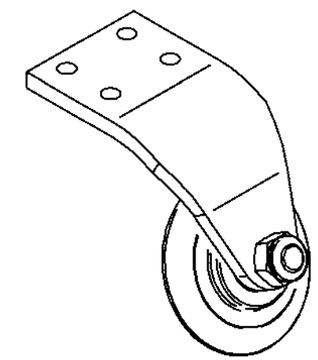

Inch
[mm]

IMPLIED TOLERANCES
ALL DIMENSIONS ARE IN INCHES - TOLERANCE UNLESS OTHERWISE SPECIFIED

NOMINAL SIZE RANGE		INCH PLUS OR MINUS		NOMINAL SIZE RANGE		METRIC PLUS OR MINUS	
OVER	TO	2 PLACE DECIMAL	3 PLACE DECIMAL	OVER	TO	1 PLACE DECIMAL	2 PLACE DECIMAL
0	6	.03	.005	0	150	.8	.13
6	24	.04	.008	150	600	1.0	.20
24	-	.06	.010	600	-	1.5	.25

UNLESS OTHERWISE SPECIFIED, ALL MACHINED SURFACES WILL HAVE:
A SURFACE FINISH OF 125 MICROINCHES
ANGULAR TOLERANCE OF ± .50°
CONCENTRICITY WITHIN .010

THIRD ANGLE PROJECTION

UNLESS OTHERWISE SPECIFIED, ALL WELDS SHOULD ADHERE TO THE MOST CURRENT A.W.S WELDING STANDARDS

CHANGE	R/L	REVISION	DATE
ECN-106406	C	SE DRAFT VERSION CREATED	09-20-10

Description: BIAS WHEEL ASSEMBLY (60°)

Drawing Number: ----------
Machine Type: MARK IV
Model: 0-2302071-0-04.asm
Drawn: bpayyadakkath
Date Drawn: 20 Sept 10
Weight: 7.2 lbm
Scale: 1:2
APVD Desg: BPA
APVD ChEng: HW
Mat'l:

HARSCO RAIL

Part Number: 0-2302071-0-04
Size: B
Sheet: 1 of 1

Plotted by bpayyadakkath on 9/20/2010 0-2302071-0-04.dft

NOTES:
1. USE BRACKET, ITEM 2, AS TEMPLATE TO LOCATE (2) Ø 5/16 HOLES IN EXISTING CHANNEL.

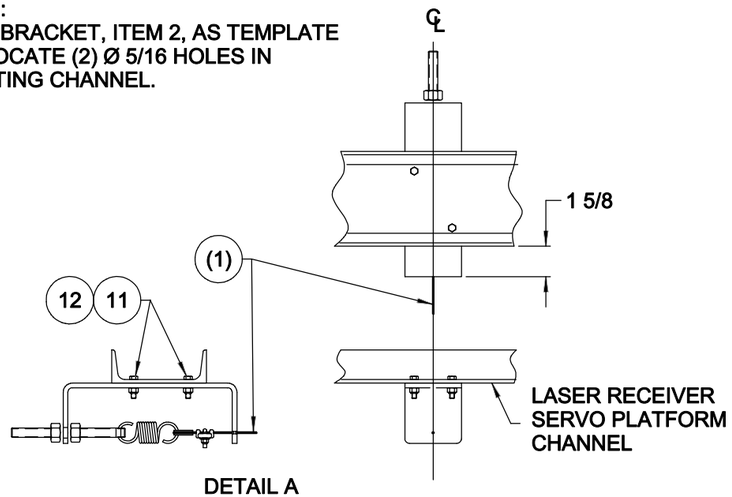

DETAIL A
FOR MACHINES WITH
LASER ALIGNMENT SYSTEM

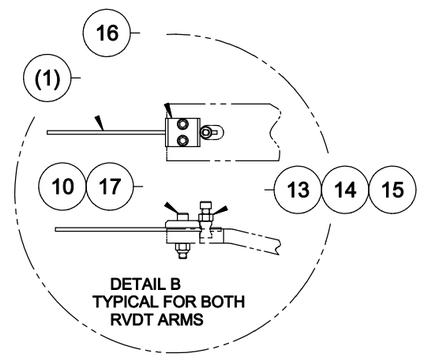

DETAIL B
TYPICAL FOR BOTH
RVDT ARMS

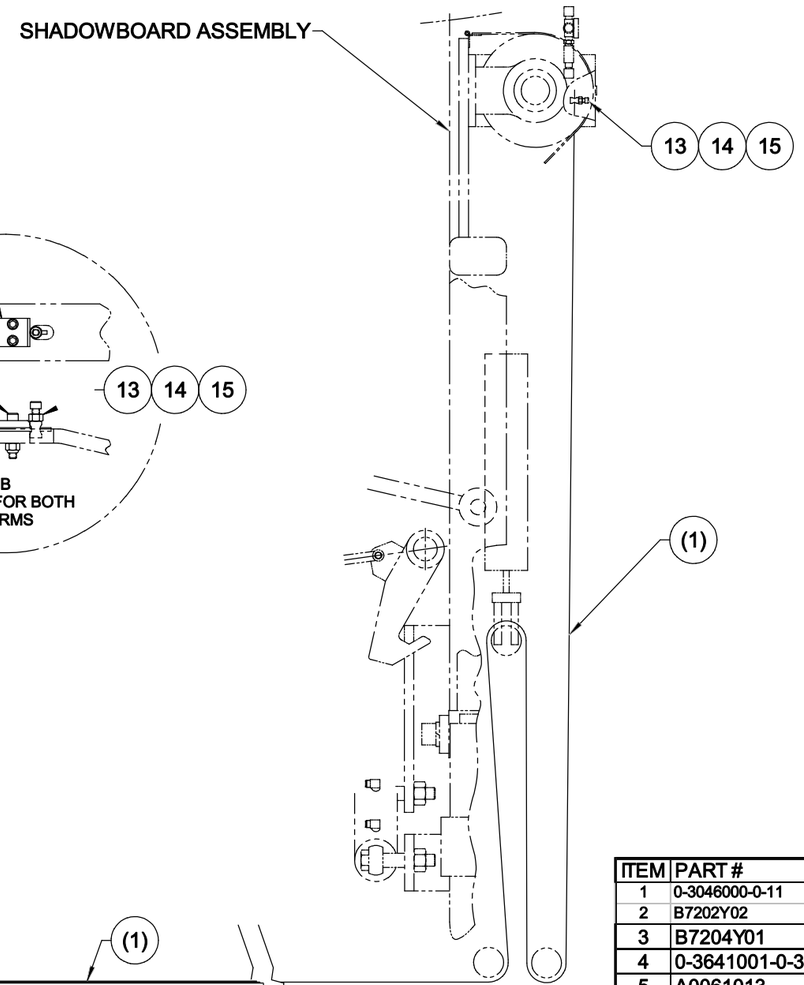

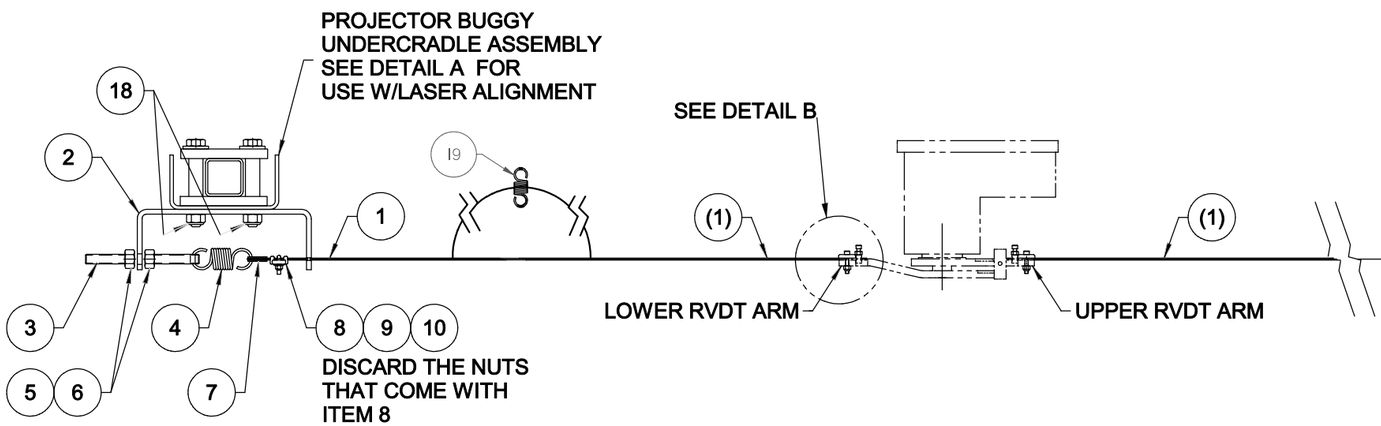

FRONT OF MACHINE

ITEM	PART #	DESCRIPTION	QTY
1	0-3046000-0-11	WIRE ROPE	120
2	B7202Y02	BRACKET	1
3	B7204Y01	THREADED ROD	1
4	0-3641001-0-32	EXT. SPRING	1
5	A0061013	1/2 MED LOK WSHR	2
6	A0055016	1/2-13 HEX NUTS USE F003598	2
7	L41873	THIMBLE, AIRCRAFT	1
8	L40243	CLIP CROSBY CABLE	1
9	A0059025	#10 MED PLAIN WSHR USE F001050	4
10	L41127	ESNA NUT 10-24 USE F018029K	6
11	A0037002	1/4-20X1 HHCAPSCREW PL	2
12	L40237	ELASTIC STOPNUT #29-NU040 USE	2
13	L40763	BUSHING THROTTLE	3
14	A0041034	10-32 X 1/2 SOCHD C SCR	3
15	A0055007	10-32 HEX NUTS USE F010825	3
16	G7413Y01	RVDT WIRE CLAMP PLATE	2
17	A0041020	10-24 X 1 SOCHD C SCR USE	4
18	0-3011001-0-38	LOCKNUT	2
19	L410848	SPRING	1

SOLID EDGE DRAWING

CONFIDENTIAL
© COPYRIGHT 2001 HARSCO TRACK TECHNOLOGIES. THIS DRAWING OR DOCUMENT IS THE PROPERTY OF HARSCO TRACK TECHNOLOGIES AND EMBODIES CONFIDENTIAL INFORMATION, TRADE SECRET INFORMATION, AND/OR KNOW-HOW THAT IS THE PROPERTY OF HARSCO TRACK TECHNOLOGIES. BY ACCEPTING THIS DRAWING OR DOCUMENT, THE RECIPIENT AGREES (1) NOT TO PROVIDE, OR OTHERWISE MAKE AVAILABLE, THE DRAWING OR DOCUMENT, OR ANY INFORMATION OR KNOW-HOW EMBODIED THEREIN, TO ANY THIRD PARTY AND (2) NOT TO REPRODUCE OR USE THE DRAWING OR DOCUMENT TO MANUFACTURE ANY APPARATUS OR DEVICE, WITHOUT THE PRIOR WRITTEN AUTHORIZATION OF HARSCO TRACK TECHNOLOGIES.

IMPLIED TOLERANCES
ALL DIMENSIONS ARE IN INCHES - TOLERANCE UNLESS OTHERWISE SPECIFIED

NOMINAL SIZE RANGE OVER	TO	INCH PLUS OR MINUS 2 PLACE DECIMAL	3 PLACE DECIMAL	NOMINAL SIZE RANGE OVER	TO	METRIC PLUS OR MINUS 1 PLACE DECIMAL	2 PLACE DECIMAL
0	6	.03	.005	0	150	.8	.13
6	24	.04	.008	150	600	1.0	.20
24	-	.06	.010	-	600	1.5	.25

UNLESS OTHERWISE SPECIFIED ALL MACHINED SURFACES WILL HAVE:
A SURFACE FINISH OF 125 MICROINCHES
ANGULAR TOLERANCE OF ± .50°
CONCENTRICITY WITHIN .010

THIRD ANGLE PROJECTION

UNLESS OTHERWISE SPECIFIED ALL WELDS SHOULD ADHERE TO THE LATEST HTT WELDING SPECIFICATION 101

CHANGE	R/L	REVISION	DATE
----	A	RELEASE	---
I02016	B	ADDED IT-I9	9/11/08

Description: LINELITE WIRE INSTL
Drawing Number: G2300XAB
Machine Type: MARK VI
Model: ----------
Weight: ----------
Scale: 1:4
Drawn: mfleming
Date Drawn: 9/11/08
APVD Dwg: HW
APVD Ctlng: JR
Mat'l: ----------

HTT
Harsco Track Technologies
Harsco
Columbia, SC

Part Number: G2300XAB
Size: D
Sheet: 1 of 1

Plotted by smadmin on 1/5/2011 G2300XAB.dft

SURFACING COMPONENTS

Item No.	Document Number	Title	Quantity
1	4012338	BASE AND WHEELS ASSEMBLY	1
4	F001530	HHCS .375-16X5.00	8
5	L40387	LOCKNUT, 3/8-16, HEAVY	18
6	4018872	RECEIVER ARM TUBE WLDT	1
7	0-3015004-0-08	HITCH PIN, 3/8 DIA	2
8	4007012	RECEIVER, DOUBLE BARREL	3
9	A0037002	1/4-20 X 1 CAD PL HHCS	12
10	L40237	LOCKNUT, 1/4-20, HEAVY	12
11	0-2303635-0-06	AIR CYLINDER ASSEMBLY	1
12	4012337	VERTICAL TUBE	2
14	A0037015	3/8-16 X 3 1/2 HHCS	8
15	D1009Y03	SLIDE PAD SHIM	8
16	D1009Y02	SLIDE PAD SHIM	8
17	D1009Y01	SLIDE PAD SHIM	8
18	C0679Y01	SLIDE PAD	8
19	A0042009	1/4-20 X 1 FL SHCS GR8	24
20	4009868	L/H STABILIZER WELDT	1
21	4009869	R/H STABILIZER WELDT	1
22	A0041158	5/8-11 X 3 SOC HD CP SCR	2
23	0-1406426-0-02	SPACER	2
24	L40006	ESNA NUT 5/8-11	2
25	A0036218	3/4-10 X 2 HHCS GR. 5	8
26	A0061022	3/4 MEDIUM LOCKWASHER	12
27	C6475XAAW	INNER GUIDE TUBE	2
28	A0926Y01	PIVOT PIN	4
29	D4713XAB_	LINEAR ACTUATOR ASSY	2
30	C8834WAAW	RECEIVER SUPPORT STAND	2
31	A0973T04	PIN W/HOLES	2
32	A0068022	3/16 X 1 COTTER PIN	4
33	C8827XAB	RECEIVER TOP MEMBER	1
34	C5894Y01	MTG PLATE	2
35	C5893X01	HAND RAIL	2
36	C5953W01	HAND RAIL , STEP	2
37	A0061023_	LOCKWASHER, 1/2, HEAVY	8

Item No.	Document Number	Title	Quantity
38	A0036122.	1/2-13 X 1 1/4 HHCS	8
39	H6053W01	FLOOR PLATE, FORMED	1
40	0-3551009-0-03	CHAMBER, SVS BRAKE 4" ROD	1
41	A0061016_	5/8 MED LOK WSHR	10
42	L420587	5/8-11 LOCKNUT	2
43	0-3014001-0-18	CLEVIS W/PIN	1
44	A0056011	5/8-18 HEX JAM NUT	1
45	L425403	ADAPTER, 3/8MP-1/4MP	1
46	A0758Y14	ORIFICE FITTING 0.125	1
47	A5443Y10_	COMPRESSION TUBE FITTING	1
48	A5524Y02	TUBING, PLASTIC (FT)	30
49	0-3040010-0-08	CHAIN LINK 1/4 (FT)	3
50	0-3422000-0-01	VINYL PLASTIC TUBING	3
51	A0036179_	HHCS 5/8-11 X 2 1/4	8
52	A3651Y06	AIR CYL	1
53	C0584Y01	PIN	1
54	A0041195	10-24 X 3 1/4 SOC HD CP SCR	4
55	0-3010004-0-10	ANCHOR SHACKLE	4
56	C0526X01	COLLAR	2
57	0-3652004-0-34	OIL IMPREGNATED BEARING	2
58	C0529WAA	TORQUE ARM	1
59	4027636	NAMEPLATE, REC LIFT	1
60	L424114	VALVE, LOCK	1
61	D4741Y01	VALVE, LIFT/LOWER	1
62	A5443Y20	TUBE FITTING	2
63	A5443Y05	COMPRESSION TUBE FITTING	2
64	A5443Y08	COMPRESSION TUBE FITTING	1
65	A5443Y04	COMPRESSION TUBE FITTING	3
66	L423094	1/4" LOW PRESSURE HOSE (FT)	50
67	L423261	HOSE END FTG JIC 1/4"	6
68	L420002	1/4MP-JIC FITTING 90	2
69	185639_	RECEPTACLE, M12, MALE, 4 PIN	2
70	C1580T78	ROUND TUBING	4
71	A0036078	3/8-16 X 6 HHCS	2

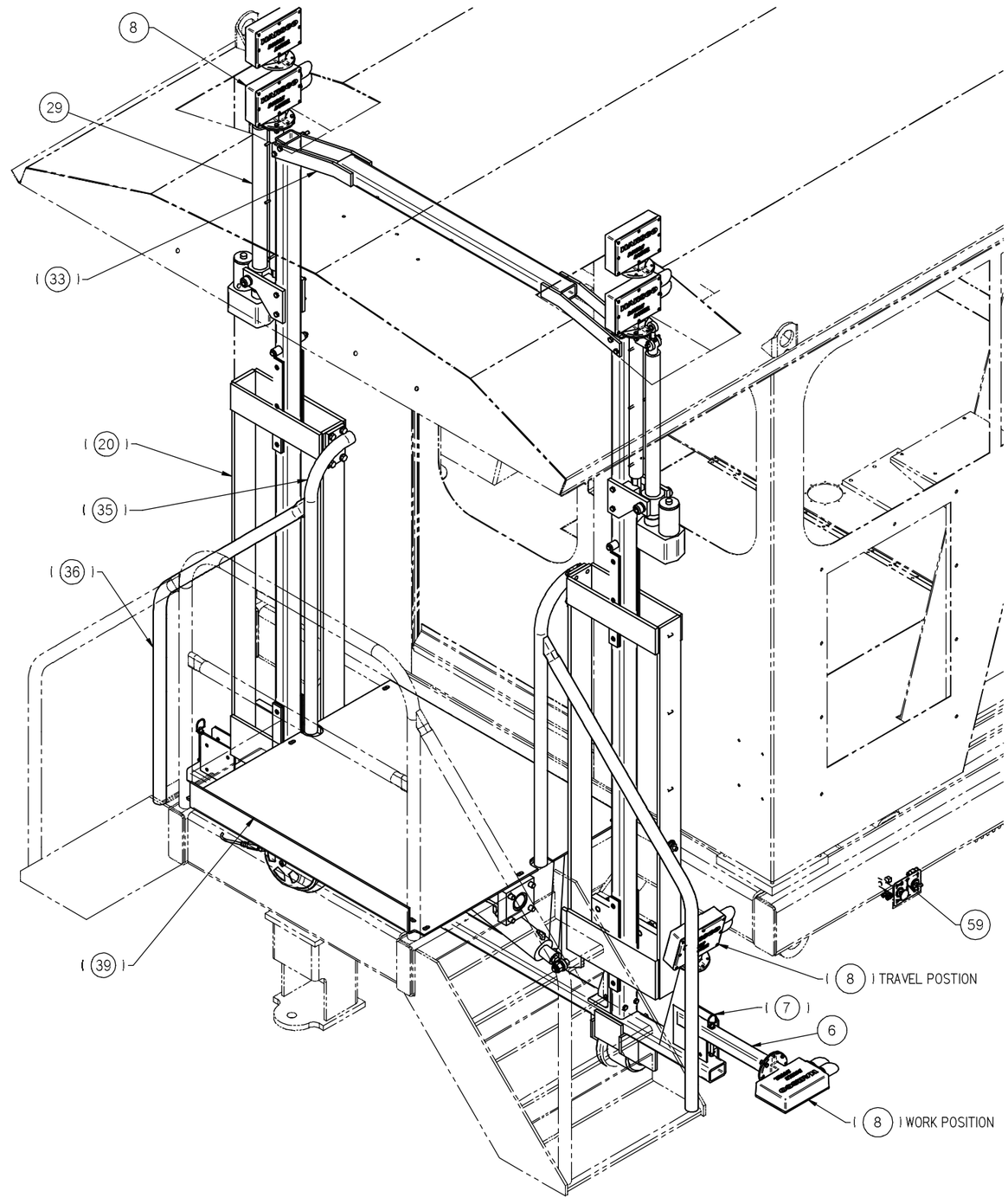

DOUBLE BARREL SURFACE AND LINER RECEIVERS

SOLID EDGE DRAWING

CONFIDENTIAL

© COPYRIGHT 2001 HARSCO TRACK TECHNOLOGIES. THIS DRAWING OR DOCUMENT IS THE PROPERTY OF HARSCO TRACK TECHNOLOGIES AND EMBODIES CONFIDENTIAL INFORMATION, TRADE SECRET INFORMATION, AND/OR KNOW-HOW THAT IS THE PROPERTY OF HARSCO TRACK TECHNOLOGIES. BY ACCEPTING THIS DRAWING OR DOCUMENT, THE RECIPIENT AGREES (1) NOT TO PROVIDE, OR OTHERWISE MAKE AVAILABLE, THE DRAWING OR DOCUMENT, OR ANY INFORMATION OR KNOW-HOW EMBODIED THEREIN, TO ANY THIRD PARTY AND (2) NOT TO REPRODUCE OR USE THE DRAWING OR DOCUMENT TO MANUFACTURE ANY APPARATUS OR DEVICE, WITHOUT THE PRIOR WRITTEN AUTHORIZATION OF HARSCO TRACK TECHNOLOGIES.

IMPLIED TOLERANCES

ALL DIMENSIONS ARE IN INCHES - TOLERANCE UNLESS OTHERWISE SPECIFIED

NOMINAL SIZE RANGE OVER	TO	INCH PLUS OR MINUS 2 PLACE DECIMAL	3 PLACE DECIMAL	NOMINAL SIZE RANGE OVER	TO	METRIC PLUS OR MINUS 1 PLACE DECIMAL	2 PLACE DECIMAL
0	6	.03	.005	0	150	.8	.127
6	24	.04	.008	150	600	1.0	.203
24	-	.06	.010	-	600	1.5	.254

UNLESS OTHERWISE SPECIFIED ALL MACHINED SURFACES WILL HAVE A SURFACE FINISH OF 125 MICROINCHES ANGULAR TOLERANCE OF +.50° CONCENTRICITY WITHIN .010

THIRD ANGLE PROJECTION

UNLESS OTHERWISE SPECIFIED ALL WELDS SHOULD ADHERE TO THE LATEST HTT WELDING SPECIFICATION 101

CHANGE	R/L	REVISION	DATE
100698	E	DELETED IT-2 A0219WAA QTY-1, IT-3 A0219WAB QTY-1 & IT-13 C0618Y01 QTY-2; IT-1 WAS 4009811; IT-4 QTY WAS 12; IT-5 QTY WAS 20; IT-8 QTY WAS 4; IT-12 WAS C8826XAB; IT-49 WAS A0192T52 QTY-2; IT-50 QTY WAS 2; IT-55 WAS L422913; IT-65 QTY WAS 2; ADDED ITS-70 & 71; PICT CHG	08-25-06
			CJW,JBR
ECN-102685	F	IT 6 WAS D4427XAA A0 HW	2 APR 09
ECN-105645	G	CHAIN LINKS 16	5-21-10
ECN-105765	H	ITEM 4 WAS A0036075 & ITEM 59 WAS C7848Y04	6-15-10

Description: RECEIVER BUGGY INSTL

Drawing Number: RECEIVER BUGGY INSTL

Model: 4009810.asm

Weight: 1091.635 lbm

Scale: 1:10

Machine Type: hwiggins

Drawn: hwiggins

Date Drawn: 9-22-05

APVD Dwg: AML

APVD Chkg: AML

Mat'l: - -

HTT
Harsco Track Technologies
Harsco
Columbia, SC

Part Number: 4009810

Size: D

Sheet: 1 of 3

Plotted by hwiggins on 9/9/2010 4009810.dft

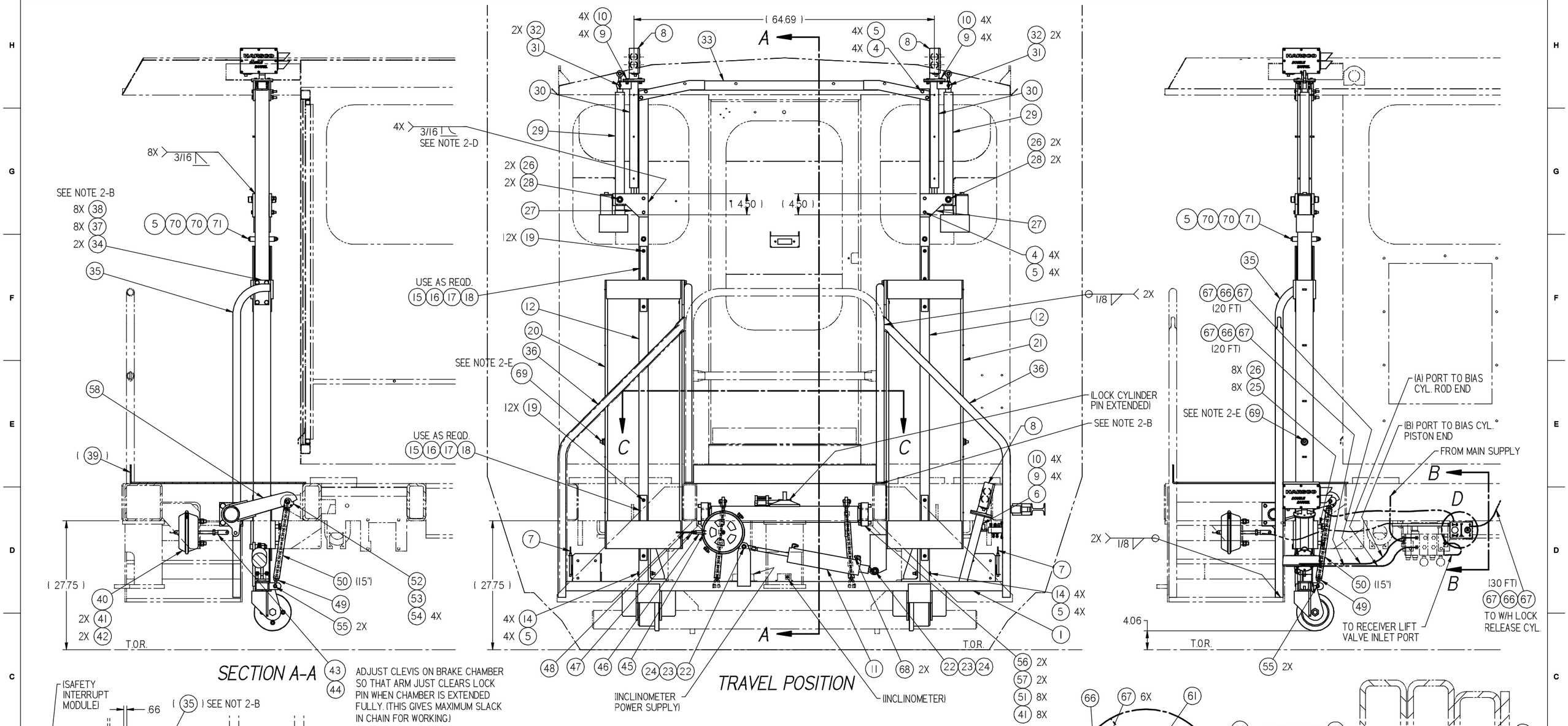

NOTE:

2-A UNLESS OTHERWISE CALLED FOR, WELDS ARE 1/8 FILLET ALL AROUND AT ALL JOINTS.

2-B BOLT MOUNTING PLATES TO ITEMS 20 & 21 USING HARDWARE, ITEMS 37 & 38, THEN WELD 1/8 FILLET ALL AROUND AT HANDRAIL BOTTOM & MAIN FRAME AND AT MOUNTING PLATE.

2-C ITEM 39 MUST BE WELDED AFTER COMPLETE INSTALLATION OF ALL OTHER PARTS OF RECEIVER.

2-D LOCATE & WELD AT ASSY (2X).

2-E WIRES TO BE CUT FLUSH WITH BACK OF RECEPTACLE, THEN MOUNTED TO WELD FLANGE AND REMOVE PINS FROM CONNECTOR.

DOUBLE BARREL SURFACE AND LINER RECEIVERS

SOLID EDGE DRAWING

CONFIDENTIAL

© COPYRIGHT 2001 HARSCO TRACK TECHNOLOGIES. THIS DRAWING OR DOCUMENT IS THE PROPERTY OF HARSCO TRACK TECHNOLOGIES AND EMBODIES CONFIDENTIAL INFORMATION, TRADE SECRET INFORMATION, AND/OR KNOW-HOW THAT IS THE PROPERTY OF HARSCO TRACK TECHNOLOGIES. BY ACCEPTING THIS DRAWING OR DOCUMENT, THE RECIPIENT AGREES (1) NOT TO PROVIDE, OR OTHERWISE MAKE AVAILABLE, THE DRAWING OR DOCUMENT, OR ANY INFORMATION OR KNOW-HOW EMBODIED THEREIN, TO ANY THIRD PARTY AND (2) NOT TO REPRODUCE OR USE THE DRAWING OR DOCUMENT TO MANUFACTURE ANY APPARATUS OR DEVICE, WITHOUT THE PRIOR WRITTEN AUTHORIZATION OF HARSCO TRACK TECHNOLOGIES.

IMPLIED TOLERANCES

ALL DIMENSIONS ARE IN INCHES - TOLERANCE UNLESS OTHERWISE SPECIFIED

INCH NOMINAL SIZE RANGE OVER	TO	2 PLACE DECIMAL	3 PLACE DECIMAL	METRIC NOMINAL SIZE RANGE OVER	TO	1 PLACE DECIMAL	2 PLACE DECIMAL
0	6	.03	.005	0	150	.8	.127
6	24	.04	.008	150	600	1.0	.203
24	-	.06	.010	-	600	1.5	.254

PLUS OR MINUS

UNLESS OTHERWISE SPECIFIED ALL MACHINED SURFACES WILL HAVE A SURFACE FINISH OF 125 MICROINCHES ANGULAR TOLERANCE OF ± .25° CONCENTRICITY WITHIN .016

THIRD ANGLE PROJECTION

UNLESS OTHERWISE SPECIFIED ALL WELDS SHOULD ADHERE TO THE LATEST HTT WELDING SPECIFICATION 101

CHANGE	R/L	REVISION	DATE
100698	E	DELETED IT-2 A0219WAA QTY-1, IT-3 A0219WAB QTY-1 & IT-13 C0618Y01 QTY-2; IT-1 WAS 4009811; IT-4 QTY WAS 12; IT-5 QTY WAS 20; IT-8 QTY WAS 4; IT-12 WAS C8826XAB; IT-49 WAS A0192T52 QTY-2; IT-50 QTY WAS 2; IT-55 WAS L422913; IT-65 QTY WAS 2; ADDED ITS-70 & 71; PICT CHG	08-25-06
ECN-I02685	F	IT 6 WAS D4427XAA	2 APR 09
ECN-I05645	G	CHAIN LINKS 16	5-21-10
ECN-I05765	H	ITEM 4 WAS A0036075 & ITEM 59 WAS C7848Y04	6-15-10

Description	RECEIVER BUGGY INSTL
Drawing Number	RECEIVER BUGGY INSTL
Model	4009810.asm
Weight	1091.635 lbm
Scale	1:10
Machine Type	
Drawn	hwiggins 9-22-05
APVD Dwg	AML
APVD Chkg	AML
CJW/JBR	
AO	HW
Mat'l	- -

HTT
Harsco Track Technologies
Harsco
Columbia, SC

Part Number 4009810 | Size D | Sheet 2 of 3

Plotted by hwiggins on 9/9/2010 4009810.dft

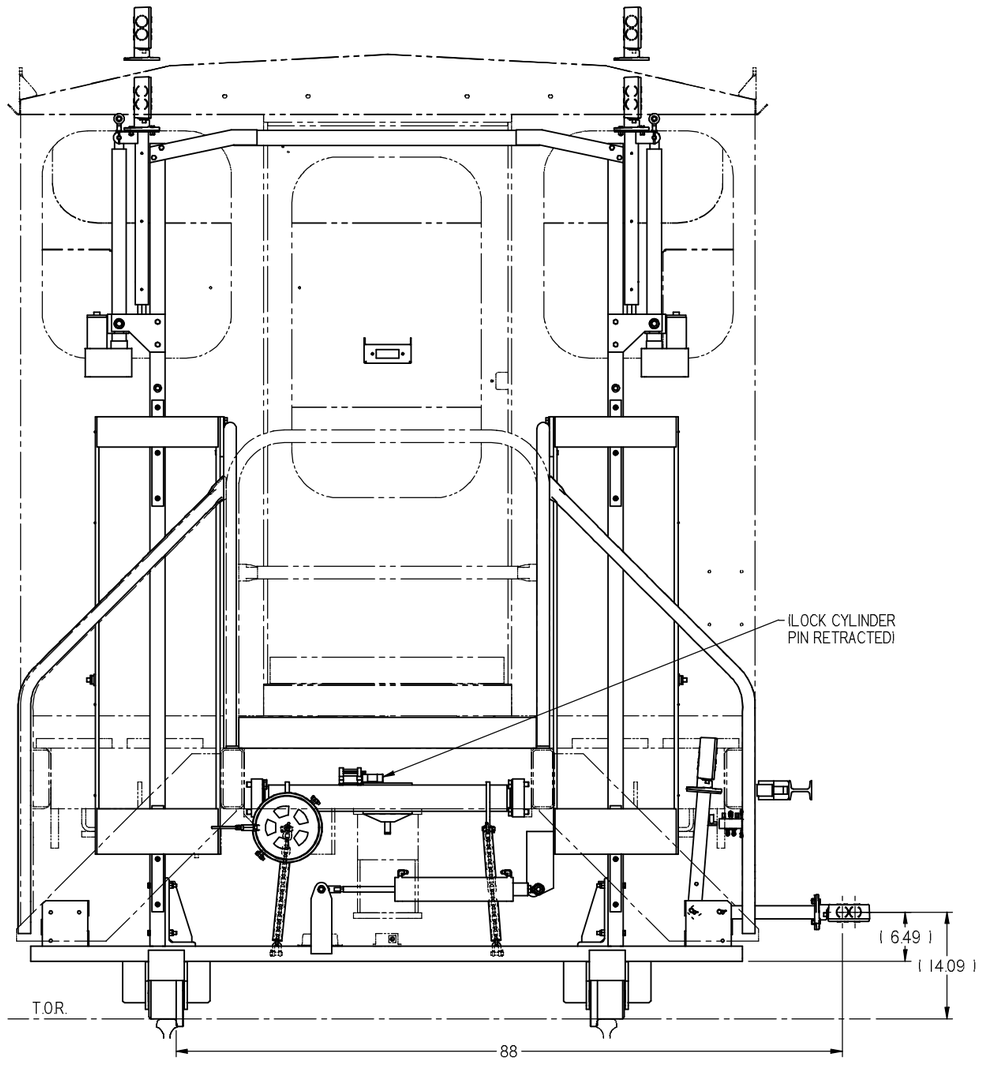

WORK POSITION

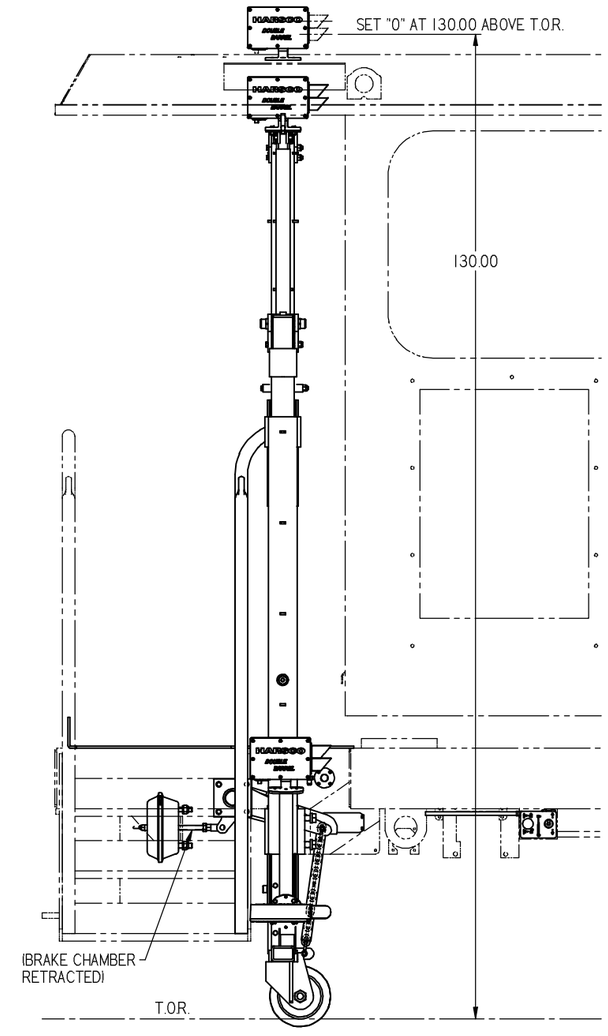

DOUBLE BARREL SURFACE AND LINER RECEIVERS

CONFIDENTIAL

© COPYRIGHT 2001 HARSCO TRACK TECHNOLOGIES. THIS DRAWING OR DOCUMENT IS THE PROPERTY OF HARSCO TRACK TECHNOLOGIES AND EMBODIES CONFIDENTIAL INFORMATION, TRADE SECRET INFORMATION, AND/OR KNOW-HOW THAT IS THE PROPERTY OF HARSCO TRACK TECHNOLOGIES. BY ACCEPTING THIS DRAWING OR DOCUMENT, THE RECIPIENT AGREES (1) NOT TO PROVIDE, OR OTHERWISE MAKE AVAILABLE, THE DRAWING OR DOCUMENT, OR ANY INFORMATION OR KNOW-HOW EMBODIED THEREIN, TO ANY THIRD PARTY AND (2) NOT TO REPRODUCE OR USE THE DRAWING OR DOCUMENT TO MANUFACTURE ANY APPARATUS OR DEVICE, WITHOUT THE PRIOR WRITTEN AUTHORIZATION OF HARSCO TRACK TECHNOLOGIES.

SOLID EDGE DRAWING

IMPLIED TOLERANCES

ALL DIMENSIONS ARE IN INCHES - TOLERANCE UNLESS OTHERWISE SPECIFIED

NOMINAL SIZE RANGE OVER	TO	HIGH PLUS OR MINUS 2 PLACE DECIMAL	3 PLACE DECIMAL	NOMINAL SIZE RANGE OVER	TO	METRIC PLUS OR MINUS 1 PLACE DECIMAL	2 PLACE DECIMAL
0	6	.03	.005	0	150	.8	.127
6	24	.04	.008	150	600	1.0	.203
24	-	.06	.010	-	600	1.5	.254

UNLESS OTHERWISE SPECIFIED ALL MACHINED SURFACES WILL HAVE:
A SURFACE FINISH OF 125 MICRONCHES
ANGULAR TOLERANCE OF +.20°
CONCENTRICITY WITHIN .010

THIRD ANGLE PROJECTION

UNLESS OTHERWISE SPECIFIED ALL WELDS SHOULD ADHERE TO THE LATEST HTT WELDING SPECIFICATION 101

CHANGE	R/L	REVISION	DATE
100698	E	DELETED IT-2 A0219WAA QTY-1, IT-3 A0219WAB QTY-1 & IT-13 C0618Y01 QTY-2; IT-1 WAS 4009811; IT-4 QTY WAS 12; IT-5 QTY WAS 20; IT-8 QTY WAS 4; IT-12 WAS C8826XAB; IT-49 WAS A0192T52 QTY-2; IT-50 QTY WAS 2; IT-55 WAS L422913; IT-65 QTY WAS 2; ADDED ITS-70 & 71; PICT CHG	08-25-06
ECN-102685	F	IT 6 WAS D4427XAA A0 HW	2 APR 09
ECN-105645	G	CHAIN LINKS 16	5-21-10
ECN-105765	H	ITEM 4 WAS A0036075 & ITEM 59 WAS C7848Y04	6-15-10

Description: RECEIVER BUGGY INSTL

Drawing Number: RECEIVER BUGGY INSTL

Machine Type: hwiggins

Date Drawn: 9-22-05

Model: 4009810.asm

Weight: 1091.635 lbm

Scale: 1:10

CJW,BR

APVD Dwg: AML

APVD Chkng: AML

Mat'l: - -

HTT
Harsco Track Technologies
Harsco
Columbia, SC

Part Number: 4009810

Size: D

Sheet: 3 of 3

Plotted by hwiggins on 9/9/2010 4009810.dft

Item Number	Part Number	Description	Quantity
10	4014388	TUBE, S/B BOTTOM	1
20	A0219WAA	WHEEL ASSY R/H	1
30	A0219WAB	WHEEL ASSY L/H	1
40	F004229	DC-HEX HD CAP SCR 1/2-13X4 1/2	4
50	A0061013	1/2 MED LOK WSHR	4
60	F003598	DC-HEX NUT 1/2-13 GR5 ZP	4

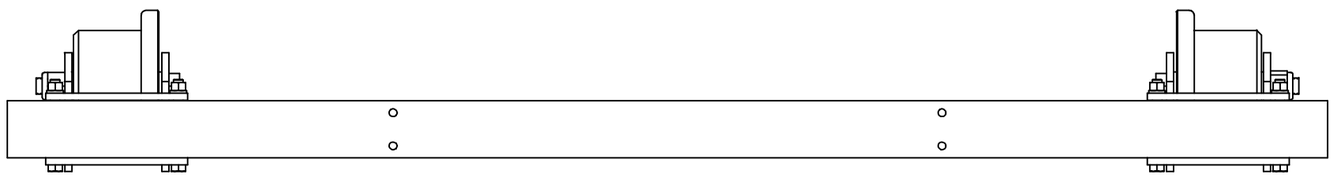

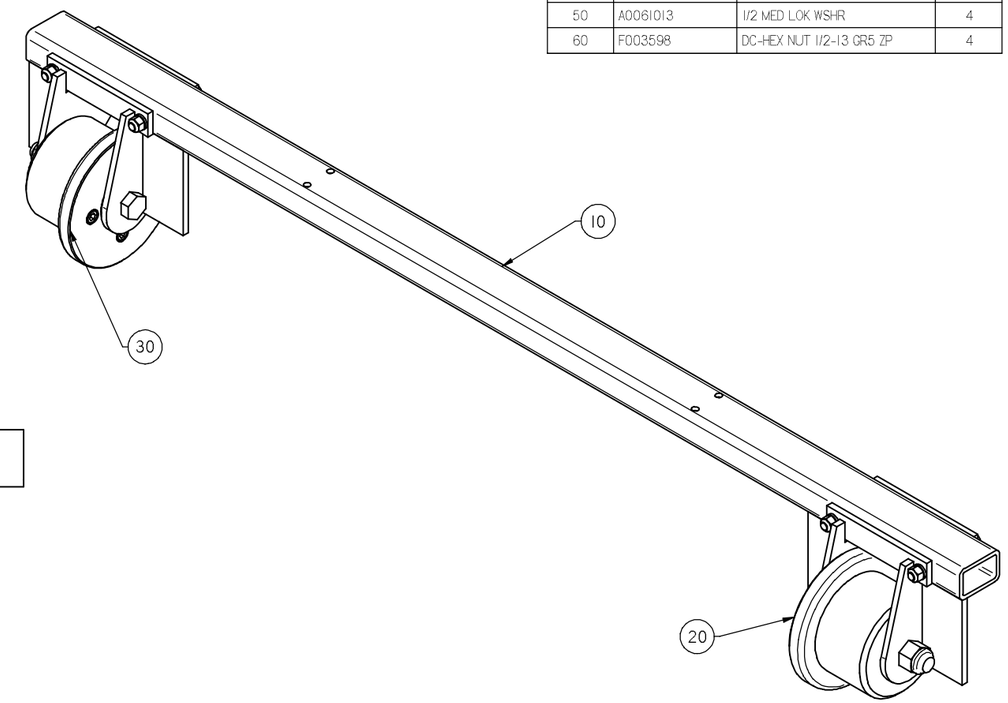

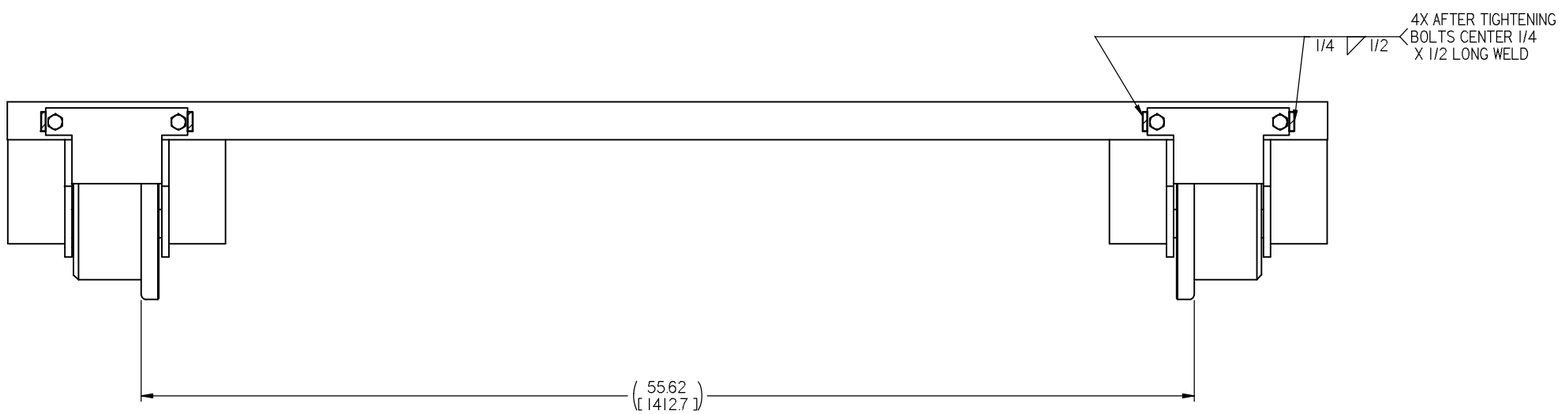

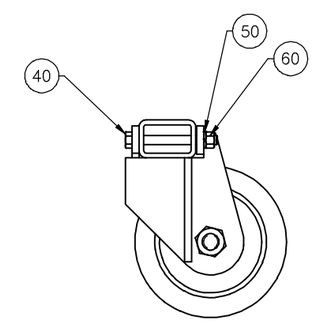

CONFIDENTIAL

© COPYRIGHT 2001 HARSCO TRACK TECHNOLOGIES. THIS DRAWING OR DOCUMENT IS THE PROPERTY OF HARSCO TRACK TECHNOLOGIES AND EMBODIES CONFIDENTIAL INFORMATION, TRADE SECRET INFORMATION, AND/OR KNOW-HOW THAT IS THE PROPERTY OF HARSCO TRACK TECHNOLOGIES. BY ACCEPTING THIS DRAWING OR DOCUMENT, THE RECIPIENT AGREES (1) NOT TO PROVIDE, OR OTHERWISE MAKE AVAILABLE, THE DRAWING OR DOCUMENT, OR ANY INFORMATION OR KNOW-HOW EMBODIED THEREIN, TO ANY THIRD PARTY AND (2) NOT TO REPRODUCE OR USE THE DRAWING OR DOCUMENT TO MANUFACTURE ANY APPARATUS OR DEVICE, WITHOUT THE PRIOR WRITTEN AUTHORIZATION OF HARSCO TRACK TECHNOLOGIES.

SOLID EDGE DRAWING

IMPLIED TOLERANCES

ALL DIMENSIONS ARE IN INCHES - TOLERANCE UNLESS OTHERWISE SPECIFIED

INCH NOMINAL SIZE RANGE OVER	TO	2 PLACE DECIMAL	3 PLACE DECIMAL	METRIC NOMINAL SIZE RANGE OVER	TO	1 PLACE DECIMAL	2 PLACE DECIMAL
0	6	.03	.005	0	150	.8	.13
6	24	.04	.008	150	600	1.0	.20
24	-	.06	.010	-	600	1.5	.25

PLUS OR MINUS

UNLESS OTHERWISE SPECIFIED ALL MACHINED SURFACES WILL HAVE:
A SURFACE FINISH OF 125 MICROINCHES
ANGULAR TOLERANCE OF +.25°
CONCENTRICITY WITHIN .016

THIRD ANGLE PROJECTION

UNLESS OTHERWISE SPECIFIED ALL WELDS SHOULD ADHERE TO THE LATEST HTT WELDING SPECIFICATION 101

CHANGE	R/L	REVISION	DATE
ECN-102719	A	NEW RELEASE	4-16-09
ECS00680	B	REDESIGN TO A BOLTED ON ASSEMBLY	4-11-11

Description: BASE AND WHEELS ASSEMBLY

Drawing Number: ----------

Machine Type: MARK IV

Model: 4021700.asm

Drawn: bbrunson — Date Drawn: 4-16-09

Weight: 144.6 lbm — Scale: 1:4 — APVD Dwg: JBR — APVD Chkng: JBR

Mat'l: - -

HTT
Harsco Track Technologies
Harsco
Columbia, SC

Part Number: **4021700** — Size: D — Sheet: 1 of 1

Plotted by hwiggins on 4/12/2011 4021700.dft

ITEM	PART NO	QTY	DESCRIPTION
10	A0213WAA	1	WHEEL BRACKET ASSY
20	0-1202407-0-01	1	WHEEL ROLLER
30	0-1202408-0-01	1	WHEEL FLANGE
40	0-3011001-0-07	1	LOCKNUT
50	A0036331	1	HHCS 7/8-9 X 7 GR5
60	Z752199	1	SPACER
70	Z752200	1	SPACER
80	Z752201	1	SPACER
90	F014338	4	1/2-13 X 1 1/4 SKT HD CS
100	Z752202-01-001	1	INSULATING BUSHING
110	F013601	2	RETAINING RING
120	L40213	2	BEARING
130	Z762124-001	2	INSULATING WASHER

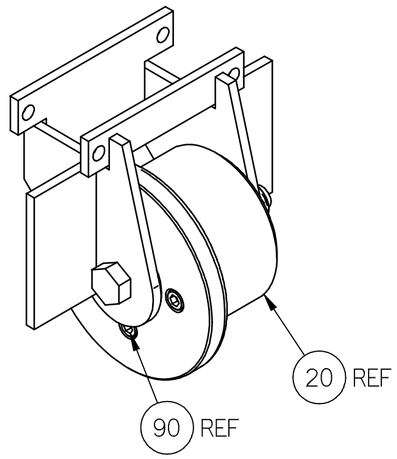

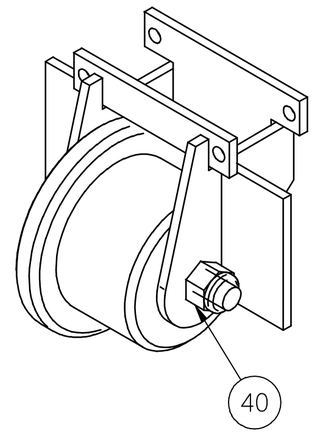

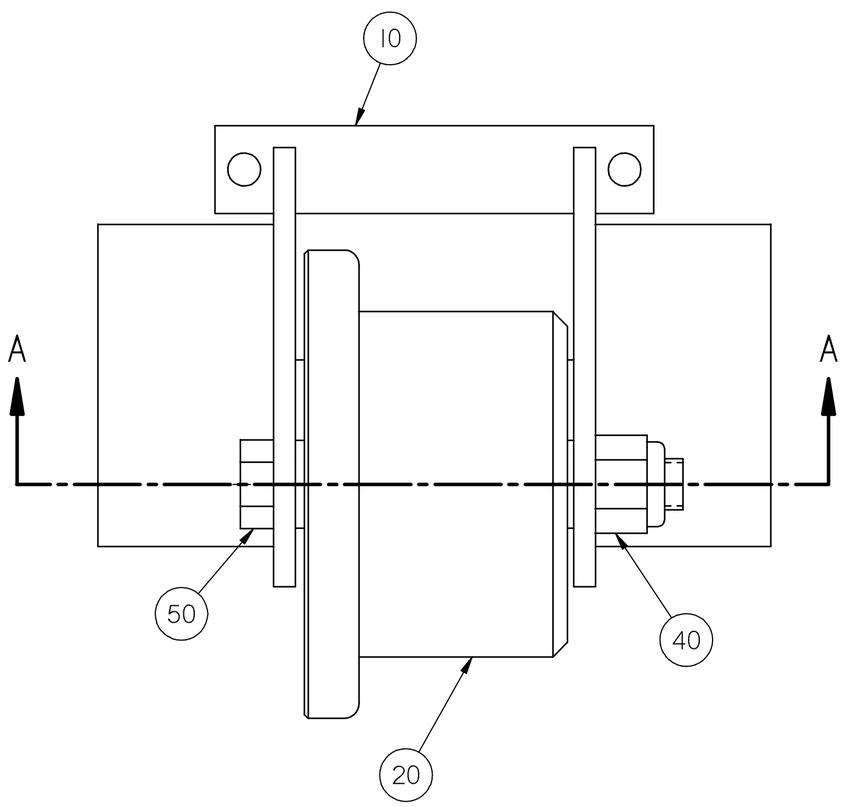

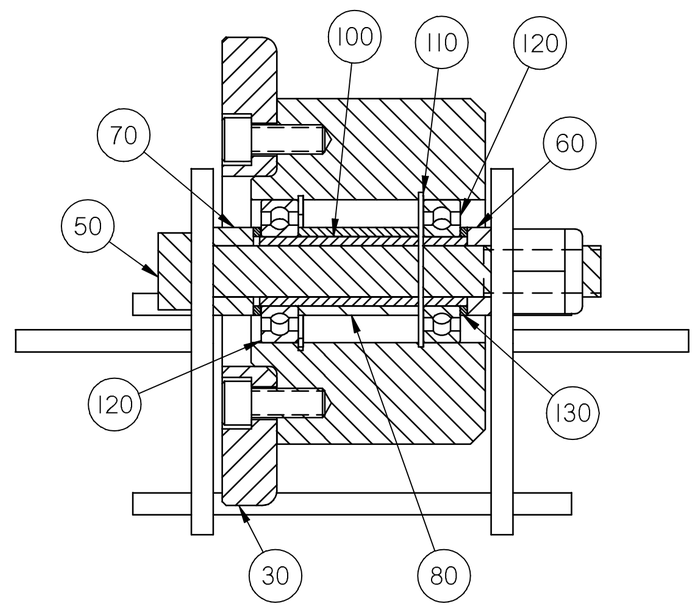

SECTION A-A

Inch
[mm]

SOLID EDGE DRAWING

CONFIDENTIAL

© COPYRIGHT 2009 HARSCO. THIS DRAWING OR DOCUMENT IS THE PROPERTY OF HARSCO AND EMBODIES CONFIDENTIAL INFORMATION, TRADE SECRET INFORMATION, AND/OR KNOW-HOW THAT IS THE PROPERTY OF HARSCO. BY ACCEPTING THIS DRAWING OR DOCUMENT, THE RECIPIENT AGREES (1) NOT TO PROVIDE, OR OTHERWISE MAKE AVAILABLE, THE DRAWING OR DOCUMENT, OR ANY INFORMATION OR KNOW-HOW EMBODIED THEREIN, TO ANY THIRD PARTY AND (2) NOT TO REPRODUCE OR USE THE DRAWING OR DOCUMENT TO MANUFACTURE ANY APPARATUS OR DEVICE, WITHOUT THE PRIOR WRITTEN AUTHORIZATION OF HARSCO.

IMPLIED TOLERANCES

ALL DIMENSIONS ARE IN INCHES - TOLERANCE UNLESS OTHERWISE SPECIFIED

NOMINAL SIZE RANGE		INCH PLUS OR MINUS		NOMINAL SIZE RANGE		METRIC PLUS OR MINUS	
OVER	TO	2 PLACE DECIMAL	3 PLACE DECIMAL	OVER	TO	1 PLACE DECIMAL	2 PLACE DECIMAL
0	6	.03	.005	0	150	.8	.13
6	24	.04	.008	150	600	1.0	.20
24	-	.06	.010	600	-	1.5	.25

UNLESS OTHERWISE SPECIFIED ALL MACHINED SURFACES WILL HAVE;
A SURFACE FINISH OF 125 MICROINCHES
ANGULAR TOLERANCE OF ±.50°
CONCENTRICITY WITHIN .010

THIRD ANGLE PROJECTION

UNLESS OTHERWISE SPECIFIED, ALL WELDS SHOULD ADHERE TO THE MOST CURRENT A.W.S WELDING STANDARDS

CHANGE	R/L	REVISION	DATE
ECN-106388	D	SE DRAFT VERSION CREATED	09-29-10

Description: WHEEL ASSY R/H

Drawing Number: ---

Machine Type: MARK IV

Model: A0219WAA.asm

Drawn: skumar

Date Drawn: 29 Sep 10

Weight: 51.6 lbm

Scale: 1:2

APVD Desg: BPA

APVD ChEng: HW

Mat'l: ----

HARSCO RAIL

Part Number: A0219WAA

Size: C

Sheet: 1 of 1

Plotted by skumar on 5/19/2011 A0219WAA.dft

ITEM	PART NO	QTY	DESCRIPTION
10	A0213WAA	1	WHEEL BRACKET ASSY
20	0-1202407-0-01	1	WHEEL ROLLER
30	0-1202408-0-01	1	WHEEL FLANGE
40	A0036331	1	HHCS 7/8-9 X 7 GR5
50	0-3011001-0-07	1	LOCKNUT
60	F014338	4	1/2-13 X 1 1/4 SKT HD CS
70	Z752200	1	SPACER
80	Z752199	1	SPACER
90	Z752202-01-001	1	INSULATING BUSHING
100	Z762124-001	2	INSULATING WASHER
110	Z752201	1	SPACER
120	F013601	2	RETAINING RING
130	L40213	2	BEARING

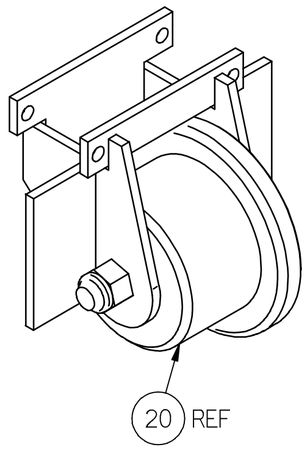

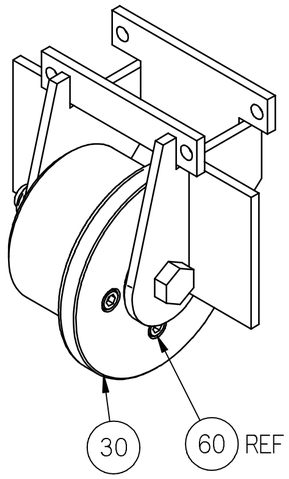

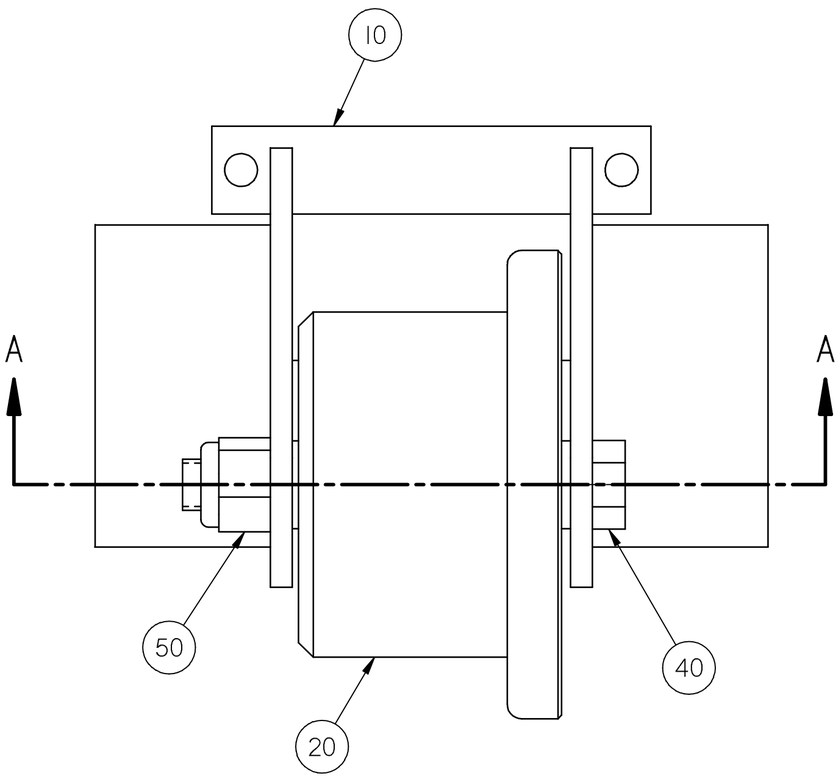

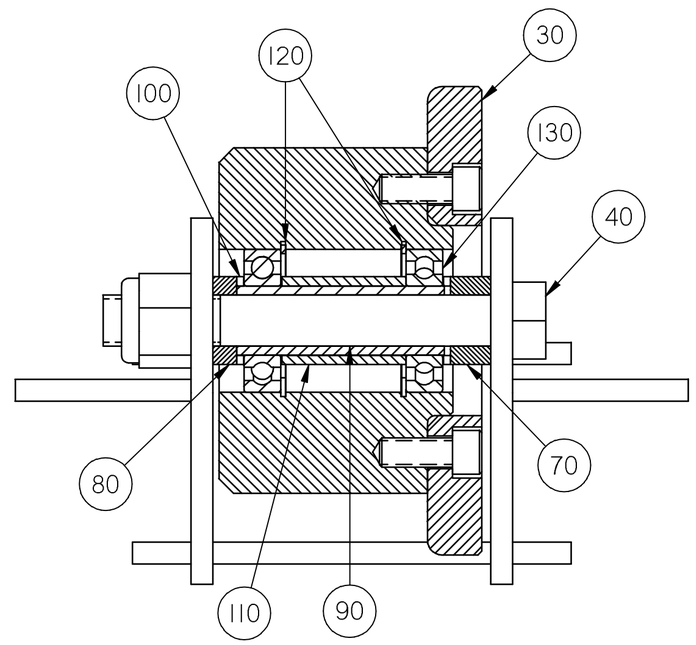

SECTION A-A

Inch
[mm]

SOLID EDGE DRAWING

CONFIDENTIAL

© COPYRIGHT 2009 HARSCO. THIS DRAWING OR DOCUMENT IS THE PROPERTY OF HARSCO AND EMBODIES CONFIDENTIAL INFORMATION, TRADE SECRET INFORMATION, AND/OR KNOW-HOW THAT IS THE PROPERTY OF HARSCO. BY ACCEPTING THIS DRAWING OR DOCUMENT, THE RECIPIENT AGREES (1) NOT TO PROVIDE, OR OTHERWISE MAKE AVAILABLE, THE DRAWING OR DOCUMENT, OR ANY INFORMATION OR KNOW-HOW EMBODIED THEREIN, TO ANY THIRD PARTY AND (2) NOT TO REPRODUCE OR USE THE DRAWING OR DOCUMENT TO MANUFACTURE ANY APPARATUS OR DEVICE, WITHOUT THE PRIOR WRITTEN AUTHORIZATION OF HARSCO.

IMPLIED TOLERANCES

ALL DIMENSIONS ARE IN INCHES - TOLERANCE UNLESS OTHERWISE SPECIFIED

INCH NOMINAL SIZE RANGE OVER	TO	INCH PLUS OR MINUS 2 PLACE DECIMAL	INCH PLUS OR MINUS 3 PLACE DECIMAL	METRIC NOMINAL SIZE RANGE OVER	TO	METRIC PLUS OR MINUS 1 PLACE DECIMAL	METRIC PLUS OR MINUS 2 PLACE DECIMAL
0	6	.03	.005	0	150	.8	.13
6	24	.04	.008	150	600	1.0	.20
24	-	.06	.010	600	-	1.5	.25

UNLESS OTHERWISE SPECIFIED ALL MACHINED SURFACES WILL HAVE;
A SURFACE FINISH OF 125 MICROINCHES
ANGULAR TOLERANCE OF ± .50°
CONCENTRICITY WITHIN .010

THIRD ANGLE PROJECTION

UNLESS OTHERWISE SPECIFIED, ALL WELDS SHOULD ADHERE TO THE MOST CURRENT A.W.S WELDING STANDARDS

CHANGE	R/L	REVISION	DATE
ECN-106388	D	SE DRAFT VERSION CREATED	09-29-10

Description: WHEEL ASSY L/H

Drawing Number: ---

Machine Type: MARK IV

Model: A0219WAB.asm

Drawn: skumar

Date Drawn: 29 Sep 10

Weight: 51.6 lbm

Scale: 1:2

APVD Desg: BPA

APVD ChEng: HW

Mat'l: ----

HARSCO RAIL

Part Number: A0219WAB

Size: C

Sheet: 1 of 1

Plotted by skumar on 5/19/2011 A0219WAB.dft

NOTES:

1. APPLY ONE DROP OF BLUE LOCTITE TO ALL THREADS

2. WIRE M12 CONNECTOR, IT-6, TO 5 POSITION PLUG, IT-9, SEE CONNECTOR WIRING DETAIL

3. FOR REFERENCE, M12 CONNECTOR, IT-6, PINOUT:
   PIN 1 BROWN PIN 2 WHITE PIN 3 BLUE
   PIN 4 BLACK PIN 5 GRAY

4. TEST AFTER ASSEMBLY

6. CLOSED CELL FOAM FILLERS ARE NOT FASTENDED IN PLACE. ITEM 16 IS PLACED UNDER PCB ASSY AND ITEM 17 IS PLACED ON TOP OF PCB ASSY

8. PLACE O-RING, ITEM 20, IN GROOVE OF LENS HOOD, ITEM 4. APPLY DIELECTRIC GREASE, H5527Y06 TO O-RING AND PRESS ON LENS SHADES ITEM 21. LENS SHADES SHOULD BE ABLE TO ROTATE BUT NOT FREELY.

9. TORQUE TO 100 IN LB

10. TORQUE TO 50 IN LB

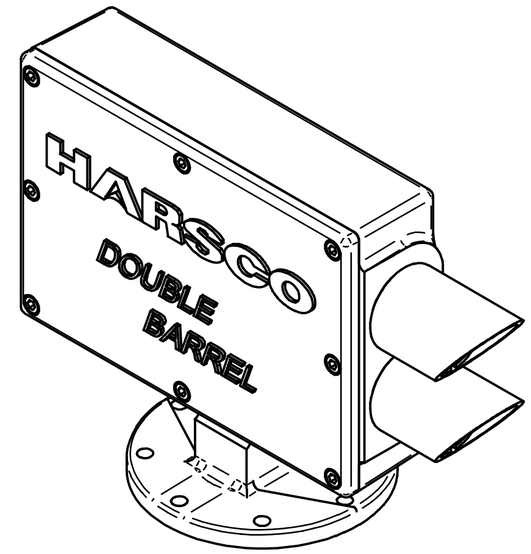

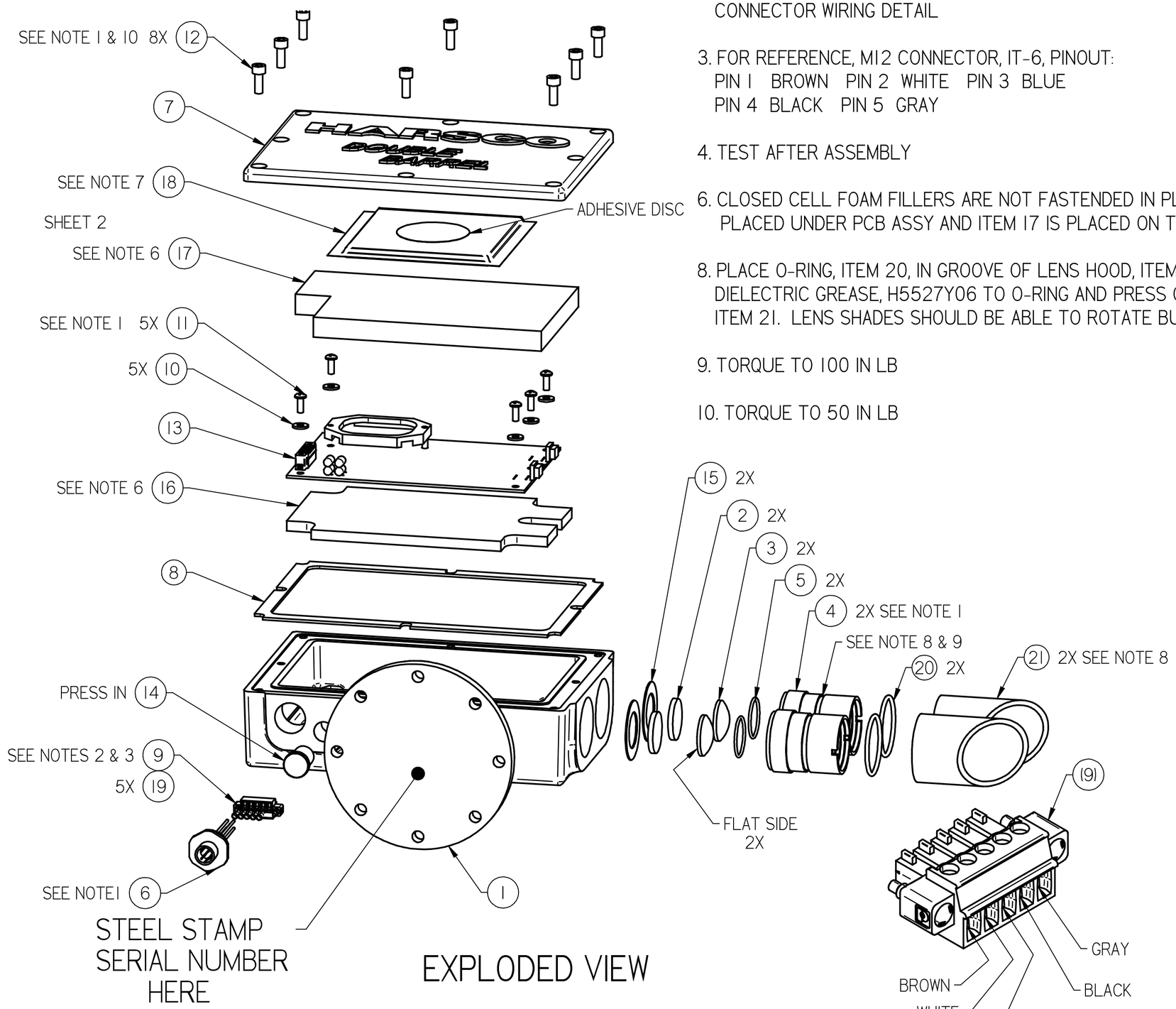

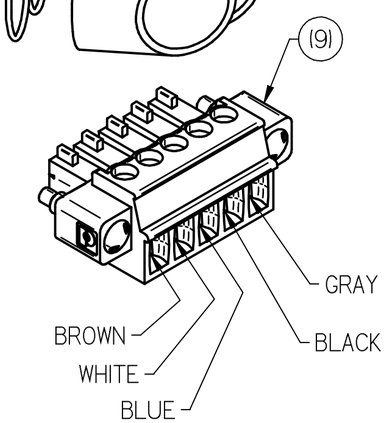

CONNECTOR WIRING DETAIL

ITEM NO,	PART NUMBER	DESCRIPTION	QTY
1	4007013	RECEIVER HOUSING MACHINING	1
2	4007019	OPTICAL FILTER	2
3	4007018	OPTICAL LENS	2
4	4007017	LENS HOOD	2
5	L410486	O-RING	2
6	4007021	CONNECTOR, M12 M 5 PIN, LEADS	1
7	4007015	RECEIVER COVER MACHINING	1
8	4010763	GASKET, FLAT COVER	1
9	A2289Y36	5 POSITION PLUG	1
10	A0059053	6 PLAIN FLAT WASHER STAINLESS	5
11	A0051043	6-32 X 3/8 PHMS STAINLESS PHILLIPS	5
12	A0041243	10-24 X 1/2 SOCHHCS STAINLESS	8
13	H6752XAD	PCB ASSY, RECEIVER	1
14	4007356	LED WINDOW	1
15	4008403	LENS CUSHION	2
16	4008946	FILLER, FOAM 1/4"	1
17	4008947	FILLER, FOAM 1/2"	1
18	4008955	DESICCANT PACKET	1
19	0-3250001-0-43	TERMINAL LUG	5
20	F015368	O-RING, -125	2
21	4010067	LENS SHADE	2

SOLID EDGE DRAWING

CONFIDENTIAL
© COPYRIGHT 2001 HARSCO TRACK TECHNOLOGIES. THIS DRAWING OR DOCUMENT IS THE PROPERTY OF HARSCO TRACK TECHNOLOGIES AND EMBODIES CONFIDENTIAL INFORMATION, TRADE SECRET INFORMATION, AND/OR KNOW-HOW THAT IS THE PROPERTY OF HARSCO TRACK TECHNOLOGIES. BY ACCEPTING THIS DRAWING OR DOCUMENT, THE RECIPIENT AGREES (1) NOT TO PROVIDE, OR OTHERWISE MAKE AVAILABLE, THE DRAWING OR DOCUMENT, OR ANY INFORMATION OR KNOW-HOW EMBODIED THEREIN, TO ANY THIRD PARTY AND (2) NOT TO REPRODUCE OR USE THE DRAWING OR DOCUMENT TO MANUFACTURE ANY APPARATUS OR DEVICE, WITHOUT THE PRIOR WRITTEN AUTHORIZATION OF HARSCO TRACK TECHNOLOGIES.

IMPLIED TOLERANCES
ALL DIMENSIONS ARE IN INCHES - TOLERANCE UNLESS OTHERWISE SPECIFIED

NOMINAL SIZE RANGE		INCH PLUS OR MINUS		NOMINAL SIZE RANGE		METRIC PLUS OR MINUS	
OVER	TO	2 PLACE DECIMAL	3 PLACE DECIMAL	OVER	TO	1 PLACE DECIMAL	2 PLACE DECIMAL
0	6	.03	.005	0	150	.8	.127
6	24	.04	.008	150	600	1.0	.203
24	-	.06	.010	-	600	1.5	.254

UNLESS OTHERWISE SPECIFIED ALL MACHINED SURFACES WILL HAVE;
A SURFACE FINISH OF 125 MICROINCHES
ANGULAR TOLERANCE OF ±.50°
CONCENTRICITY WITHIN .010

THIRD ANGLE PROJECTION

UNLESS OTHERWISE SPECIFIED ALL WELDS SHOULD ADHERE TO THE LATEST HTT WELDING SPECIFICATION 101

CHANGE	R/L	REVISION		DATE
		PLEASE SEE REVISION HISTORY SHEET		
13081.25	D	ADDED ITS-20 & 21 & NOTE 8	JBR/AML	9/22/05
100092	E	IT-8 WAS 4007020. IT-20 WAS L41740. DEL NOTE 5.	JBR/AML	12/1/05
101597	F	ADDED NOTES 9 & 10	HW/JBR	02/06/08
105138	G	VISUAL UPDATE ONLY	LR/JBR	01/29/10

Description: RECEIVER, DOUBLE BARREL
Drawing Number: ----------
Machine Type: ALL TAMPERS
Model: 4007012.asm
Drawn: JBR
Date Drawn: 9/7/04
Weight: 7.720 lbm
Scale: 1:2
APVD Desg: K.Koon
APVD ChEng: AML
Mat'l

HTT
Harsco Track Technologies
Harsco
Columbia, SC

Part Number: 4007012
Size: C
Sheet: 1 of 2

Plotted by Iroldan on 9/9/2010 4007012.dft

NOTES:
7. INNER SURFACE OF COVER MUST BE CLEAN AND DRY. ATTACH DESICCANT PACKET TO CENTER OF COVER USING THE ADHESIVE DISC THAT COMES ON THE PACKET. SEE PICTURE BELOW.

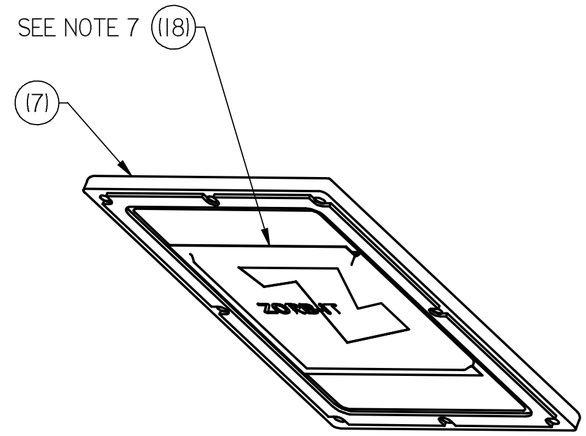

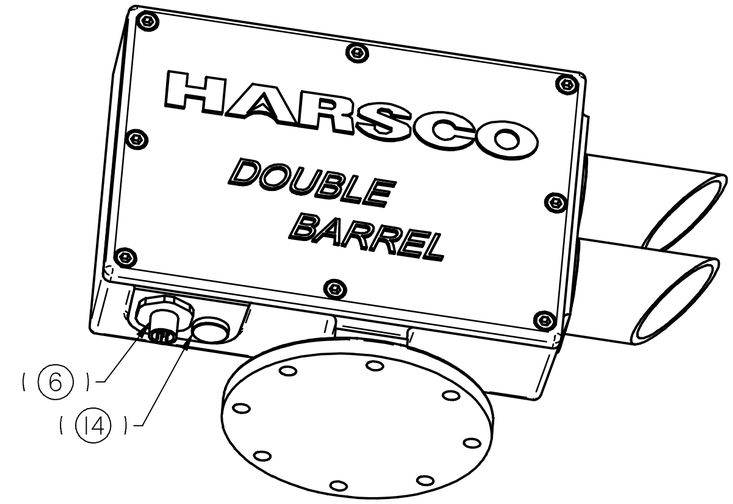

RED INDICATOR ILLUMINATES WHEN RECEIVER SEES PROJECTOR LIGHT. GREEN INDICATES POWER ON

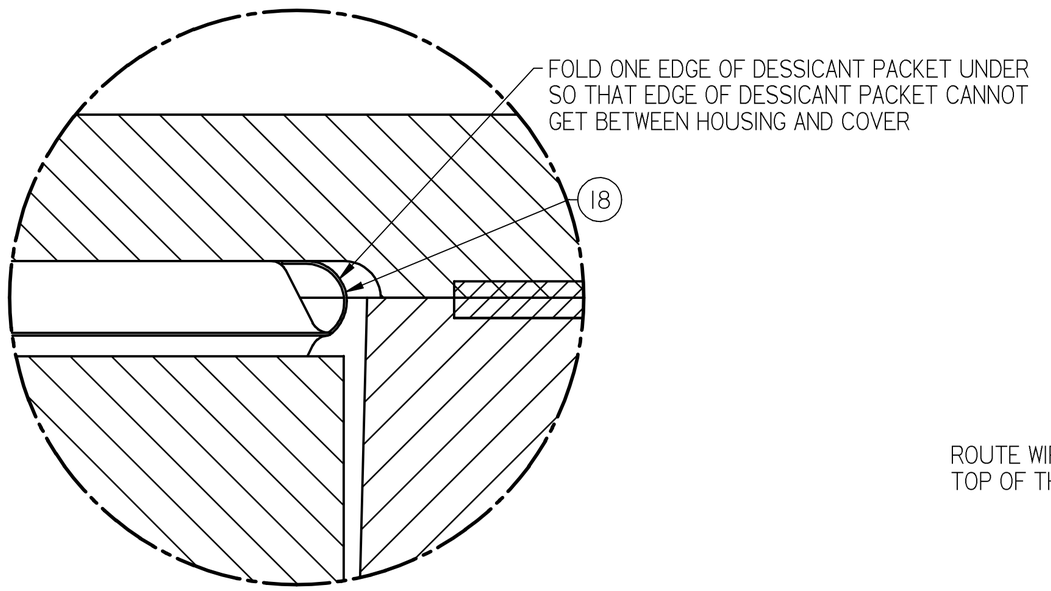

DETAIL B

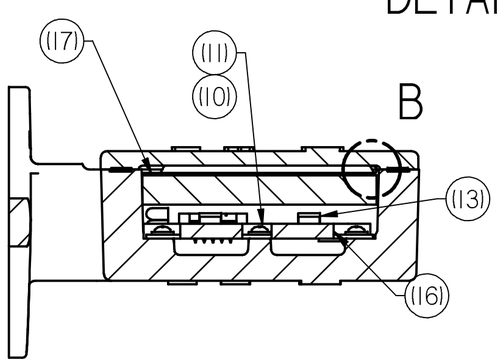

SECTION A-A

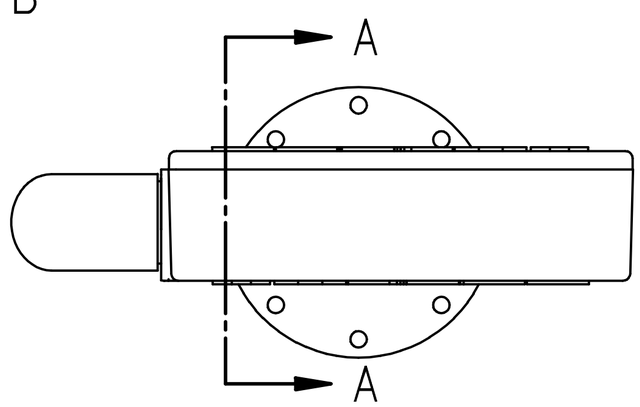

TOP VIEW

ROUTE WIRE FROM M12 CONNECTOR OVER THE TOP OF THE 1/2" CLOSED CELL FOAM FILLER

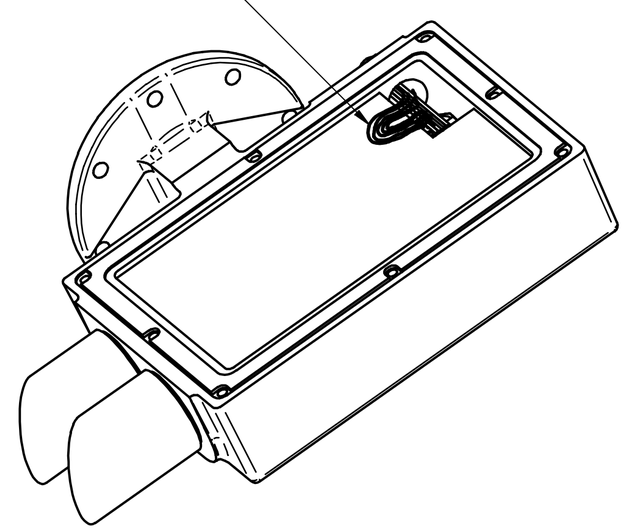

SHOWN WITH COVER REMOVED

SOLID EDGE DRAWING

CONFIDENTIAL
© COPYRIGHT 2001 HARSCO TRACK TECHNOLOGIES. THIS DRAWING OR DOCUMENT IS THE PROPERTY OF HARSCO TRACK TECHNOLOGIES AND EMBODIES CONFIDENTIAL INFORMATION, TRADE SECRET INFORMATION, AND/OR KNOW-HOW THAT IS THE PROPERTY OF HARSCO TRACK TECHNOLOGIES. BY ACCEPTING THIS DRAWING OR DOCUMENT, THE RECIPIENT AGREES (1) NOT TO PROVIDE, OR OTHERWISE MAKE AVAILABLE, THE DRAWING OR DOCUMENT, OR ANY INFORMATION OR KNOW-HOW EMBODIED THEREIN, TO ANY THIRD PARTY AND (2) NOT TO REPRODUCE OR USE THE DRAWING OR DOCUMENT TO MANUFACTURE ANY APPARATUS OR DEVICE, WITHOUT THE PRIOR WRITTEN AUTHORIZATION OF HARSCO TRACK TECHNOLOGIES.

IMPLIED TOLERANCES
ALL DIMENSIONS ARE IN INCHES - TOLERANCE UNLESS OTHERWISE SPECIFIED

NOMINAL SIZE RANGE		INCH PLUS OR MINUS		NOMINAL SIZE RANGE		METRIC PLUS OR MINUS	
OVER	TO	2 PLACE DECIMAL	3 PLACE DECIMAL	OVER	TO	1 PLACE DECIMAL	2 PLACE DECIMAL
0	6	.03	.005	0	150	.8	.127
6	24	.04	.008	150	600	1.0	.203
24	-	.06	.010	-	600	1.5	.254

UNLESS OTHERWISE SPECIFIED ALL MACHINED SURFACES WILL HAVE:
A SURFACE FINISH OF 125 MICROINCHES
ANGULAR TOLERANCE OF ± .50°
CONCENTRICITY WITHIN .010

THIRD ANGLE PROJECTION

UNLESS OTHERWISE SPECIFIED ALL WELDS SHOULD ADHERE TO THE LATEST HTT WELDING SPECIFICATION 101

CHANGE	R/L	REVISION		DATE
		PLEASE SEE REVISION HISTORY SHEET		
13081.25	D	ADDED ITS-20 & 21 & NOTE 8	JBR/AML	9/22/05
100092	E	IT-8 WAS 4007020. IT-20 WAS L41740. DEL NOTE 5.	JBR/AML	12/1/05
101597	F	ADDED NOTES 9 & 10	HW/JBR	02/06/08
105138	G	VISUAL UPDATE ONLY	LR/JBR	01/29/10

Description: RECEIVER, DOUBLE BARREL
Drawing Number: ----------
Machine Type: ALL TAMPERS
Model: 4007012.asm
Drawn: JBR
Date Drawn: 9/7/04
Weight: 7.720 lbm
Scale: 1:2
APVD Desg: K.Koon
APVD ChEng: AML
Mat'l

HTT
Harsco Track Technologies
Harsco
Columbia, SC

Part Number: 4007012
Size: C
Sheet: 2 of 2

Plotted by lroldan on 9/9/2010 4007012.dft

CONFIDENTIAL
© COPYRIGHT 2009 HARSCO. THIS DRAWING OR DOCUMENT IS THE PROPERTY OF HARSCO AND EMBODIES CONFIDENTIAL INFORMATION, TRADE SECRET INFORMATION, AND/OR KNOW-HOW THAT IS THE PROPERTY OF HARSCO. BY ACCEPTING THIS DRAWING OR DOCUMENT, THE RECIPIENT AGREES (1) NOT TO PROVIDE, OR OTHERWISE MAKE AVAILABLE, THE DRAWING OR DOCUMENT, OR ANY INFORMATION OR KNOW-HOW EMBODIED THEREIN, TO ANY THIRD PARTY AND (2) NOT TO REPRODUCE OR USE THE DRAWING OR DOCUMENT TO MANUFACTURE ANY APPARATUS OR DEVICE, WITHOUT THE PRIOR WRITTEN AUTHORIZATION OF HARSCO.

SOLID EDGE DRAWING

ITEM	PART NO	QTY	DESCRIPTION
10	C0046XAC	1	LINEAR ACTUATOR ASSEMBLY
20	A0055017	1	1/2-20 HEX NUTS
30	0-3652053-0-02	1	MALE ROD END
40	A7347Y03	1	ACTUATOR BOOT
50	L420492	1	STANDARD TIE

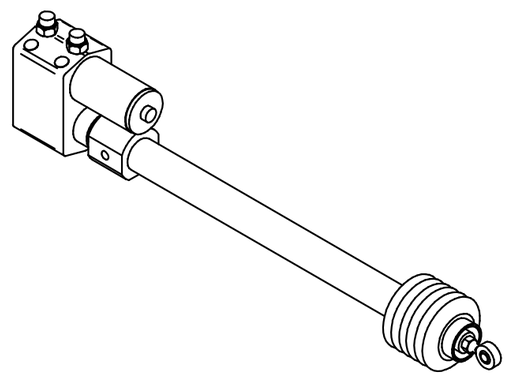

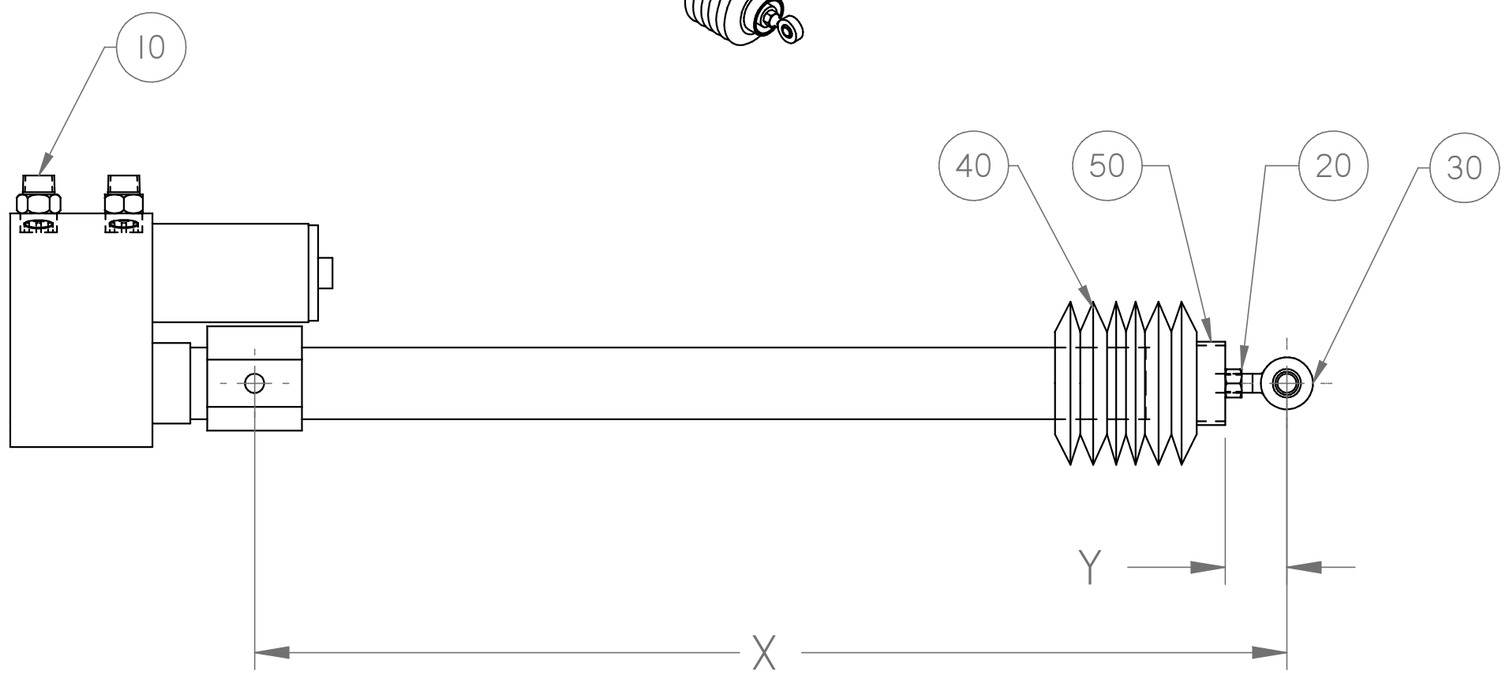

NOTE:
APPLY LOCTITE 271
TO THREADS WHEN
ASSEMBLING ITS-20 & 30

X	24 3/16 (RETRACTED)
Y	1 3/4

Inch
[mm]

IMPLIED TOLERANCES
ALL DIMENSIONS ARE IN INCHES - TOLERANCE UNLESS OTHERWISE SPECIFIED

NOMINAL SIZE RANGE		INCH PLUS OR MINUS		NOMINAL SIZE RANGE		METRIC PLUS OR MINUS	
OVER	TO	2 PLACE DECIMAL	3 PLACE DECIMAL	OVER	TO	1 PLACE DECIMAL	2 PLACE DECIMAL
0	6	.03	.005	0	150	.8	.13
6	24	.04	.008	150	600	1.0	.20
24	-	.06	.010	600	-	1.5	.25

UNLESS OTHERWISE SPECIFIED, ALL MACHINED SURFACES WILL HAVE:
A SURFACE FINISH OF 125 MICROINCHES
ANGULAR TOLERANCE OF ± .50°
CONCENTRICITY WITHIN .010

THIRD ANGLE PROJECTION

UNLESS OTHERWISE SPECIFIED, ALL WELDS SHOULD ADHERE TO THE MOST CURRENT A.W.S WELDING STANDARDS

CHANGE	R/L	REVISION	DATE
EC500764	B	SE DRAFT VERSION CREATED	12-29-10

Description: LINEAR ACTUATOR ASSY
Drawing Number: ----------
Machine Type: MARK IV
Model: D4713XAB.asm
Drawn: rkamal
Date Drawn: 29 Dec 10
Weight: 24.2 lbm
Scale: 1:4
APVD Desg: BPA
APVD ChEng: HW
Mat'l: - -
Part Number: D4713XAB
Size: B
Sheet: 1 of 1

HARSCO RAIL

Plotted by bpayyadakkath on 4/19/2011 D4713XAB.dft

CONFIDENTIAL
© COPYRIGHT 2009 HARSCO. THIS DRAWING OR DOCUMENT IS THE PROPERTY OF HARSCO AND EMBODIES CONFIDENTIAL INFORMATION, TRADE SECRET INFORMATION, AND/OR KNOW-HOW THAT IS THE PROPERTY OF HARSCO. BY ACCEPTING THIS DRAWING OR DOCUMENT, THE RECIPIENT AGREES (1) NOT TO PROVIDE, OR OTHERWISE MAKE AVAILABLE, THE DRAWING OR DOCUMENT, OR ANY INFORMATION OR KNOW-HOW EMBODIED THEREIN, TO ANY THIRD PARTY AND (2) NOT TO REPRODUCE OR USE THE DRAWING OR DOCUMENT TO MANUFACTURE ANY APPARATUS OR DEVICE, WITHOUT THE PRIOR WRITTEN AUTHORIZATION OF HARSCO.

SOLID EDGE DRAWING

ITEM	PART NO	QTY	DESCRIPTION
10	B8409X02	1	ELECTRIC LINEAR ACTUATOR
20	H5961Y01	1	DECAL DOT MEDIUM YELLOW
30	H5961Y02	1	DECAL DOT LIGHT GRAY
40	0-3250001-0-01	5	TERMINAL LUG
50	185639	2	RECEPTACLE, M12, MALE, 4 PIN

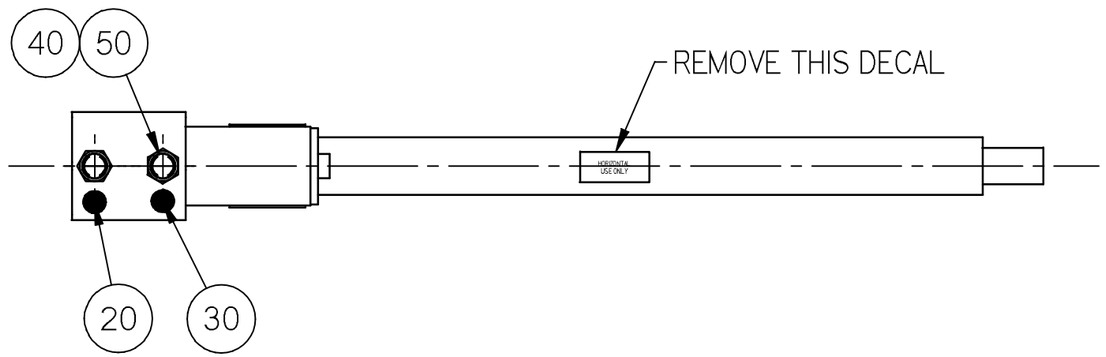

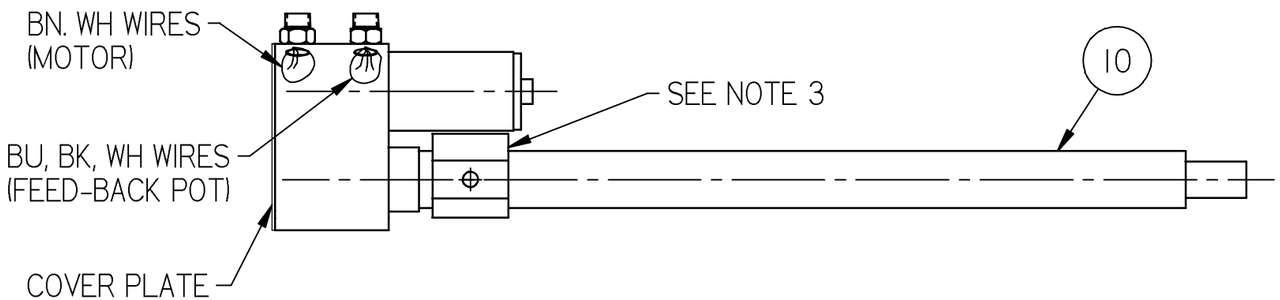

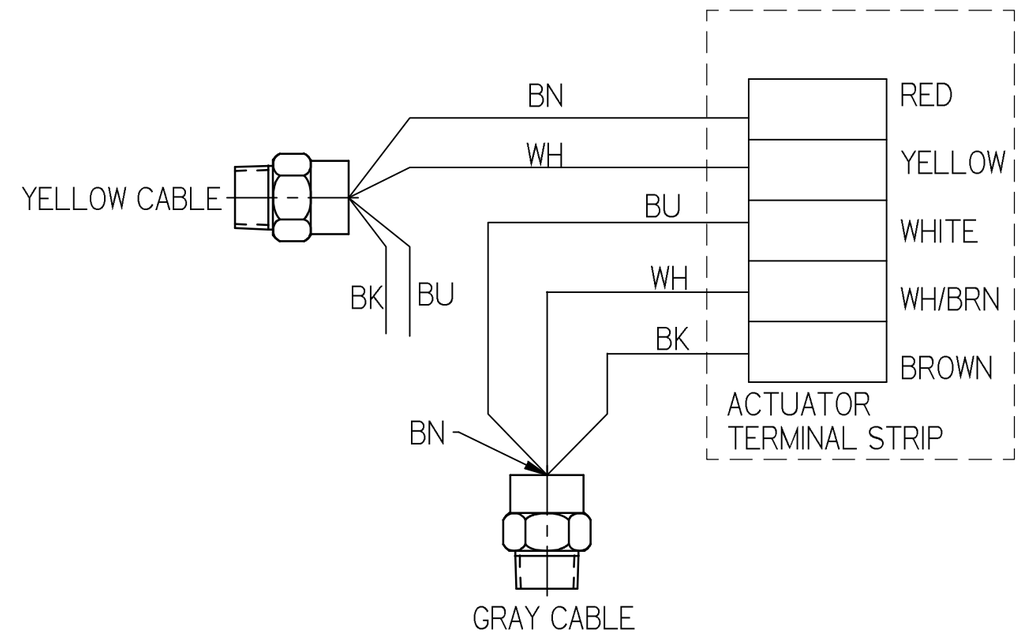

ACTUATOR WIRING

NOTES:

1. CUT OFF EXCESS LENGTH OF WIRE THEN STRIP ENDS 1/4", SOLDER WIRES TO TERMINAL LUGS. TAPE UP UNUSED WIRES.
2. USE BLUE LOCTITE TO SEAL THREADS.
3. APPLY RED LOCTITE, 0-3040000-0-07, TO BARREL AND TIGHTEN INTO ACTUATOR BODY UNTIL A NO LOAD AMP READING OF 2.00 ± .1 AMPS IS ACHIEVED.

Inch
[mm]

IMPLIED TOLERANCES
ALL DIMENSIONS ARE IN INCHES - TOLERANCE UNLESS OTHERWISE SPECIFIED

NOMINAL SIZE RANGE		INCH PLUS OR MINUS		NOMINAL SIZE RANGE		METRIC PLUS OR MINUS	
OVER	TO	2 PLACE DECIMAL	3 PLACE DECIMAL	OVER	TO	1 PLACE DECIMAL	2 PLACE DECIMAL
0	6	.03	.005	0	150	.8	.13
6	24	.04	.008	150	600	1.0	.20
24	-	.06	.010	600	-	1.5	.25

UNLESS OTHERWISE SPECIFIED, ALL MACHINED SURFACES WILL HAVE:
A SURFACE FINISH OF 125 MICROINCHES
ANGULAR TOLERANCE OF ±.50°
CONCENTRICITY WITHIN .010

THIRD ANGLE PROJECTION

UNLESS OTHERWISE SPECIFIED, ALL WELDS SHOULD ADHERE TO THE MOST CURRENT A.W.S WELDING STANDARDS

CHANGE	R/L	REVISION	DATE
ECN-106388	D	SE DRAFT VERSION CREATED	10-27-10

Description: LINEAR ACTUATOR ASSY
Drawing Number: ----------
Machine Type: MARK IV
Model: C0046XAC.asm
Drawn: skumar
Date Drawn: 27 Oct 10
Weight: 23.9 lbm
Scale: 1:5
APVD Desg: BPA
APVD ChEng: HW
Mat'l: ----
Part Number: C0046XAC
Size: B
Sheet: 1 of 1

HARSCO RAIL

Plotted by skumar on 3/18/2011 C0046XAC.dft

B8409X02 ELECTRIC ACTUATOR
REPAIR PARTS

FOR
C0046XAB ACTUATOR ASSEMBLY
C0046XAC ACTUATOR ASSEMBLY

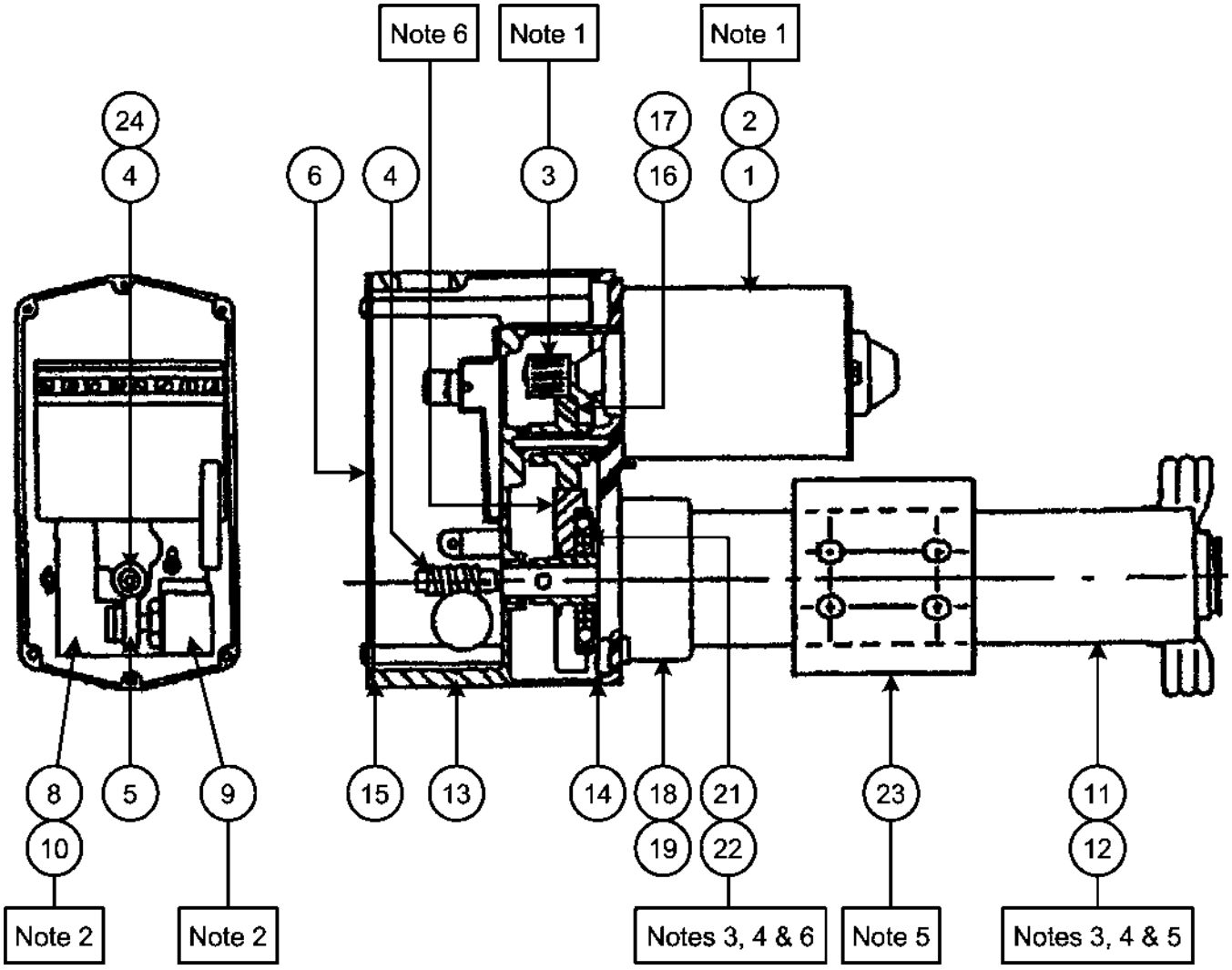

Notes:
1. Item 3 is Included in Items 1 and 2.
2. Items 8 and 9 are included in Item 10.
3. Item 21 is Included in Item 11.
4. Item 22 is Included in Item 12,
5. Item 23 is Not Included in Items 11 and 12.
6. Item 21 and 22 Clutch Assemblies Include Gear.

B8409X02 ELECTRIC ACTUATOR
REPAIR PARTS

FOR
C0046XAB ACTUATOR ASSEMBLY
C0046XAC ACTUATOR ASSEMBLY

ITEM	PART NO	DESCRIPTION	QTY
	C0046XAB	Complete Actuator Assembly	1
	C0046XAC	Complete Actuator Assembly	1
	B8409X02	Actuator Assembly for C0046XAB or C0046XAC	1
1	B8904Y01	36 VDC Motor for C0046XAB	1
2	B8904Y02	36 VDC Motor for C0046XAC	1
3	B8904Y03	Motor Gear	1
4	B8904Y04	Potentiometer Worm Gear	1
5	B8904Y05	Potentiometer Gear	1
6	B8904Y06	Cover	1
7	B8904Y07	Rod End	1
8	B8904Y08	Potentiometer Bracket	1
9	B8904Y09	Potentiometer with Lead Wires and Lugs	1
10	B8904Y10	Potentiometer with Bracket, Terminals, Wire	1
13	B8904Y13	Main Housing	1
14	B8904Y14	Front Gasket - Motor End	1
15	B8904Y15	Rear Gasket - Cover End	1
16	B8904Y16	Intermediate Gear Assembly for C0046XAC	1
17	B8904Y17	Intermediate Gear Assembly for C0046XAB	1
18	B8904Y18	Front Housing Assembly for C0046XAC	1
19	B8904Y19	Front Housing Assembly for C0046XAB	1
20	A7347Y01	Dust Cover	1
21	B8904Y21	Clutch Assembly for C0046XAB	1
22	B8904Y22	Clutch Assembly for C0046XAC	1
23	B8904Y23	Adaptor	1
24	L421297	Retaining Ring External	1

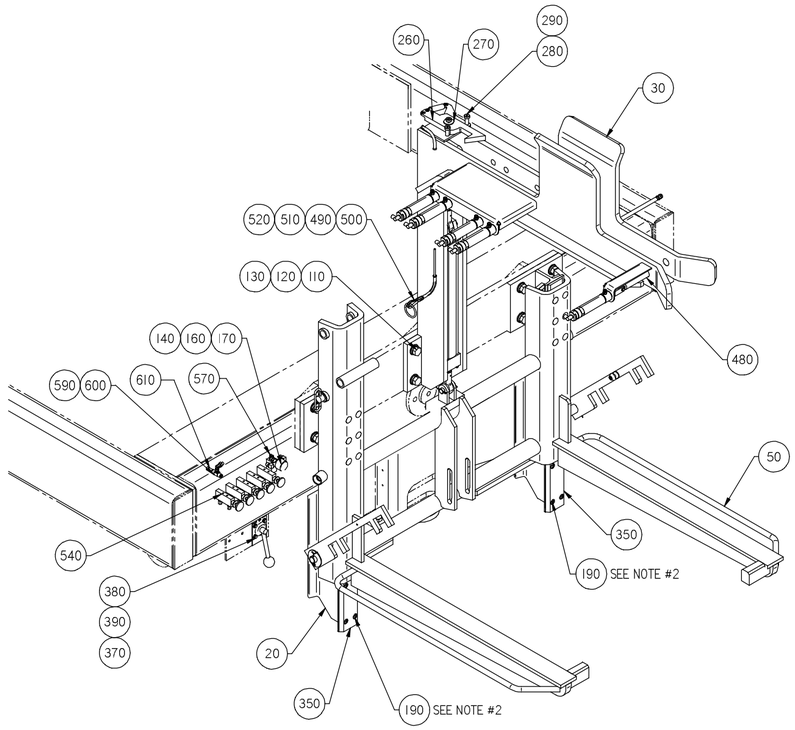

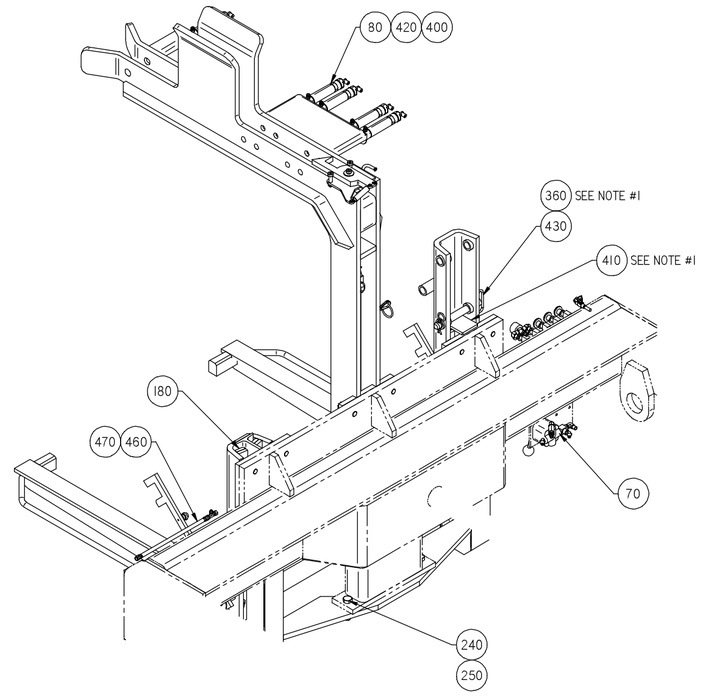

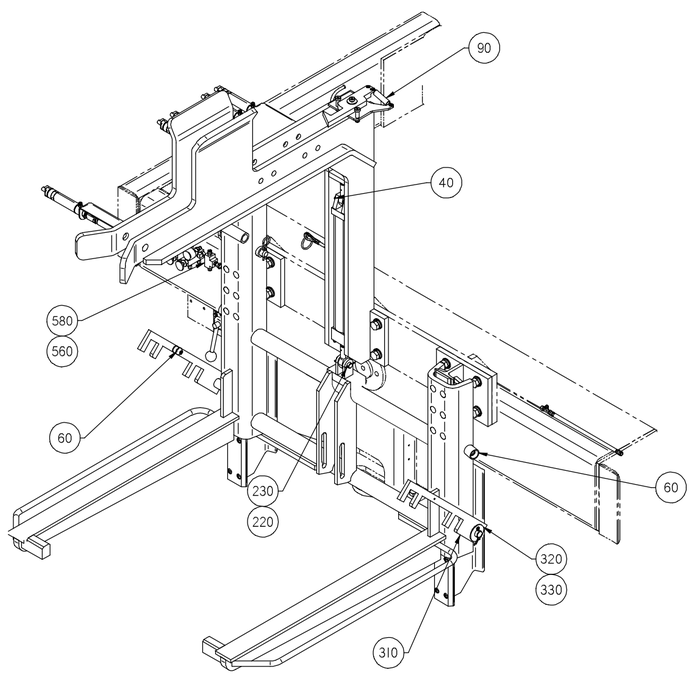

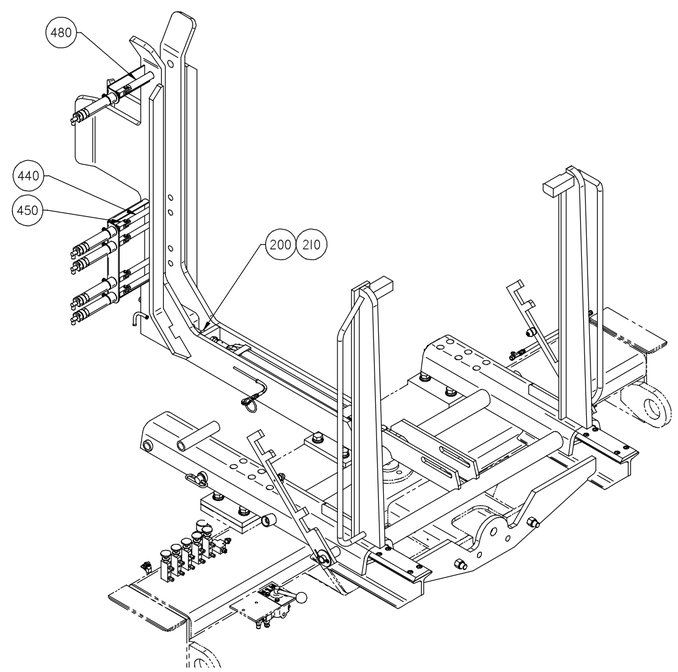

ITEM	PART NO	QTY	DESCRIPTION
20	A7046WAB	1	BRACE ASSEMBLY
30	H5932VAA	1	BUGGY SUPPORT WELDMENT
40	G7733YAA	1	BUGGY LIFT CYLINDER ASSY
50	G7721WAA	1	BUGGY LIFT WELDMENT
60	C8837Y02	2	DOOR HOLDER
70	C7417XAA	1	PROJECTOR BUGGY LIFT
80	0-3470019-0-14	5	DBL ACT AIR CYL
90	L40984	1	EXTENSION SPRING
100	A0042012	12	5/16-18X1 1/2 FL SOC ALL
110	A0036219	12	3/4-10 X 2 1/4 CAPSCREW
120	A0060018	26	3/4 SAE WSHR USE F002929
130	A0061022	12	3/4 MED LOCKWASHER USE F001354
140	L41385	1	PIPE, JIC/MALE USE F012318
150	L40388	12	LOCKNUT, 5/16-18, HEAVY, THIN
160	A5443Y07	2	FITTING, COMPRESSN TUBE
170	5006483	1	MINIATURE PRESSURE W/GAU
180	A7056X01	4	SLIDE PAD
190	A0052039	12	5/16-18X3/4 FLHD MSCR
200	A0055023	2	3/4-16 HEX NUTS
210	A0056013	1	3/4-16HEX JAM NUTS USE F010972
220	D5507T09	1	PIN W/HOLES
230	A0068014	2	1/8 X1 1/4 COTTER PIN USE
240	A0036222	2	3/4-10X3 CAPSCREW USE F007986
250	L41148	2	3/4-10 LOCKNUT CHAD PLATE
260	H5943X01	1	LATCH
270	A0059005	2	1/2 PL WSHR USE F001267
280	Z752500-026	3	1/2 X 1 1/4 HEX SOC SHD
290	0-3011001-0-90	3	3/8-16 LOCKNUT STAINLESS STEEL
300	A0043033	2	1/4-20x3/4 SHCS w/NYLOK
310	A7367X01	2	STORAGE BAR
320	A0059010	2	1 MED PL WSHR USE F013412
330	A0068025	2	3/16 X 2 COTTER PIN USE
340	A0043035	2	1/4-20x1 1/4 SHCS w/NYLOK
350	A7051W01	2	SLIDE PAD
360	0-3015005-0-05	1	HAIR PIN COTTER
370	B8821Y01	1	BUGGY LIFT NAMEPLATE
380	A0036032	4	5/16-18 X 3/4 HHCS U/F001489
390	A0061009	4	5/16 MED LOCK WSHR USE F009546
400	A5443Y04	5	FITTING, COMPRESSN TUBE
410	D3692Y01	1	STOP PAD
420	A5443Y03	15	FITTING,COMPRESSN TUBE
430	0-3015004-0-01	1	HITCH PIN
440	4000334	4	LOCK PIN
450	0-3014001-0-23	5	ROD CLEVIS W/PIN
460	L423094	15	HOSE, 1/4 LP
470	L423261	2	HOSE END, -4 JIC SW
480	4000335	1	LOCK PIN
490	L41133	4	ROPE, AIRCRAFT STL, WIRE
500	L410636	1	THIMBLE CABLE
510	L420681	2	SWAGE SLEEVE
520	Z686508	1	CENTER JACK RING
540	D4741Y01	5	PUSH/PULL AIR VALVE
550	0-3304057-0-07	1	TEE, -4/-4/-4 SW RUN USE
560	A1302Y03	1	FITTING
570	A5443Y10	2	TUBE FITTING
580	0-3410004-0-02	1	SHUTTLE VALVE
590	A5443Y20	1	FITTING 90 DEGREE-1/8NPT
600	A5443Y05	4	COMPRESSION FITTING
610	L423607	250	NYLON TUBING (FT)

NOTES:

1. AFTER STOP PAD, IT-410, IS WELDED, ADJUST THE LIFT CYLINDER MOUNT TO OBTAIN 1/4" GAP BETWEEN HITCH PIN, IT-430 & STOP PAD, IT-410 WHEN THE LIFT CYLINDER IS FULLY RETRACTED.
2. APPLY LOCTITE, 0-3040000-0-06 (LOCTITE 242) TO SCREW THREADS USED TO FASTEN LOWER SLIDE PADS
3. REPLACE EXISTING FITTING FROM AIR SUPPLY WITH IT-550

CONFIDENTIAL

© COPYRIGHT 2009 HARSCO. THIS DRAWING OR DOCUMENT IS THE PROPERTY OF HARSCO AND EMBODIES CONFIDENTIAL INFORMATION, TRADE SECRET INFORMATION, AND/OR KNOW-HOW THAT IS THE PROPERTY OF HARSCO. BY ACCEPTING THIS DRAWING OR DOCUMENT, THE RECEIVER (1) AGREES (A) NOT TO PROVIDE, OR OTHERWISE MAKE AVAILABLE THE DRAWING OR DOCUMENT, OR ANY INFORMATION OR KNOW-HOW EMBODIED THEREIN, TO ANY OTHER PARTY AND (B) NOT TO REPRODUCE OR USE THE DRAWING OR DOCUMENT TO MANUFACTURE ANY APPARATUS OR DEVICE, WITHOUT THE PRIOR WRITTEN AUTHORIZATION OF HARSCO.

SOLID EDGE DRAWING

IMPLIED TOLERANCES

ALL DIMENSIONS ARE IN INCHES - TOLERANCE UNLESS OTHERWISE SPECIFIED

NOMINAL DIMENSION		INCH PLUS OR MINUS		NOMINAL DIMENSION	METRIC PLUS OR MINUS	
OVER	TO	2 PLACE DECIMAL	3 PLACE DECIMAL	OVER	TO	1 PLACE DECIMAL	2 PLACE DECIMAL
0	6	.03	.005	0	150	.8	.13
6	24	.04	.005	150	600	1.0	.20
24	-	.06	.010	600	-	1.5	.25

UNLESS OTHERWISE SPECIFIED: ALL MACHINED SURFACES WILL HAVE A SURFACE FINISH OF 125 MICROINCHES ANGULAR TOLERANCE OF +-30' CONCENTRICITY WITHIN .010

THIRD ANGLE PROJECTION

UNLESS OTHERWISE SPECIFIED, ALL WELDS WOULD ADHERE TO THE MOST CURRENT AWS WELDING STANDARDS

CHANGE	R/L	REVISION	DATE
100893	C	WAS ME10 DWG W/SEP P/L, IT-7 & 8 QTY WAS 2, IT-46 WAS A5638T01, IT-51 QTY WAS 100, DELETED IT-61 0-3304106-0-13 QTY-1	12-08-08
ECN-101706	D	DELETED IT-45, Z698548	03-31-09
ECS00744	E	REDRAFTED BASED ON SE MODEL BY HARSCO INDIA, PARTS LIST REARRANGED	11-11-10

Description: BUGGY LIFT SYSTEM

Drawing Number: H5953VAA.asm

Model: H5953VAA.asm

Weight: 3055.8 lbm

Scale: 1:8

Machine Type: MARK IV

Drawn: bpayyadakkath

Date Drawn: 11 Nov 10

APVD Eng: BPA

APVD Dftg: HW

Part Number: H5953VAA

Size: E

Sheet: 1 of 2

Inch [mm]

HARSCO RAIL

Plotted by bpayyadakkath on 3/22/2011 H5953VAA.dft

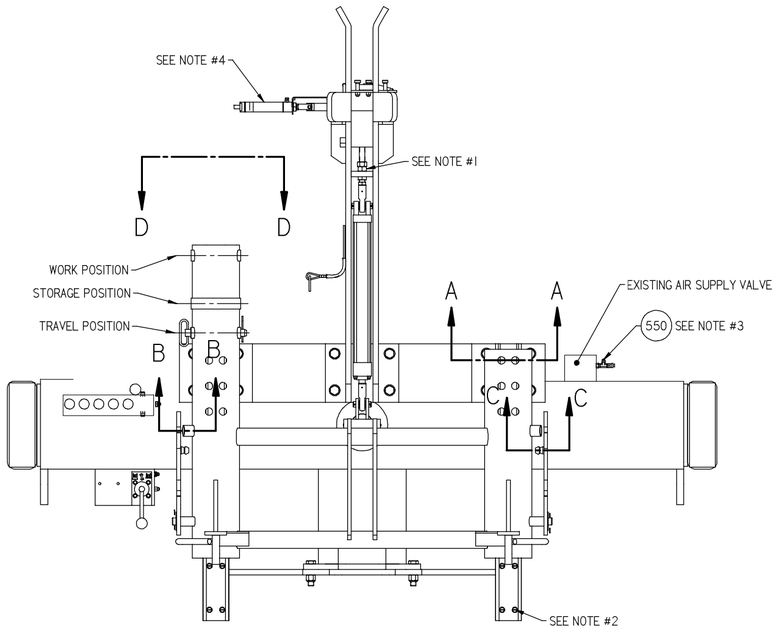

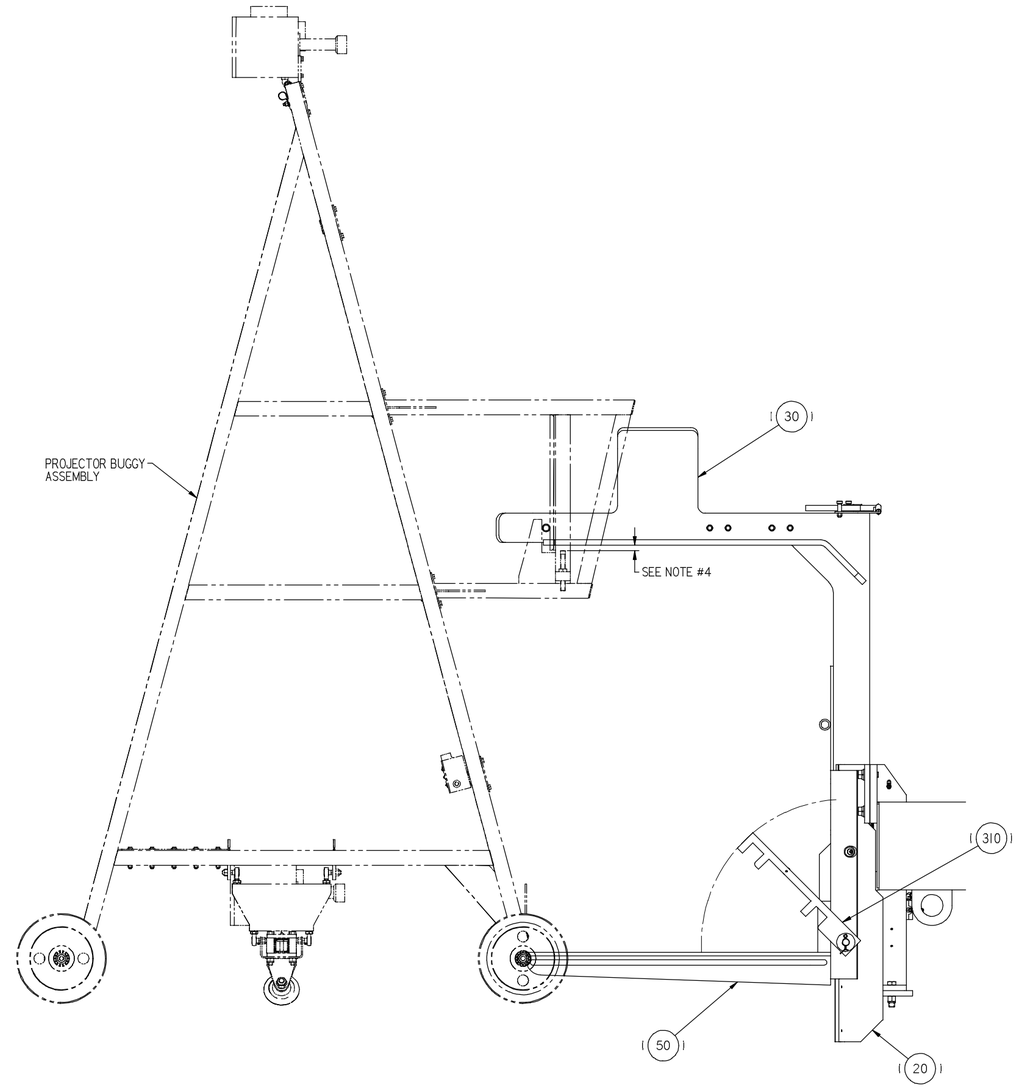

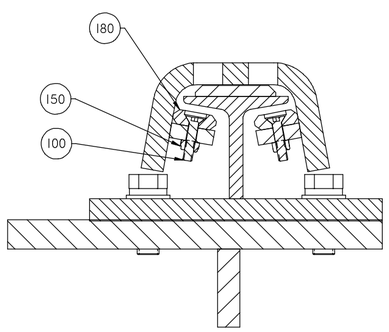

SECTION A-A

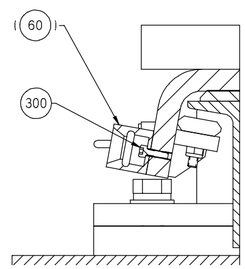

SECTION B-B

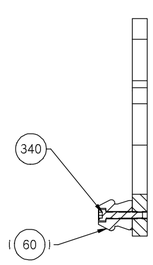

SECTION C-C

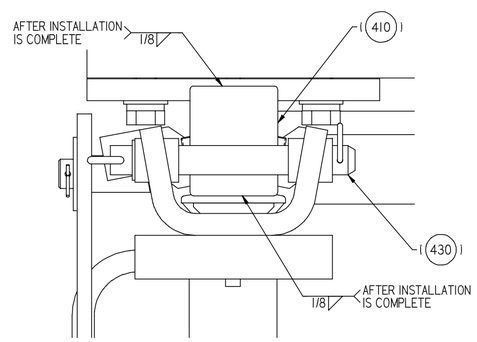

VIEW D-D

NOTES:

1. AFTER STOP PAD, IT-410, IS WELDED, ADJUST THE LIFT CYLINDER MOUNT TO OBTAIN 1/4" GAP BETWEEN HITCH PIN, IT-430 & STOP PAD, IT-410 WHEN THE LIFT CYLINDER IS FULLY RETRACTED.
2. APPLY LOCTITE, 0-3040000-0-06 (LOCTITE 242) TO SCREW THREADS USED TO FASTEN LOWER SLIDE PADS
3. REPLACE EXISTING FITTING FROM AIR SUPPLY WITH IT-550
4. AFTER CYLINDER MOUNT IS ADJUSTED AS PER NOTE #1, ADJUST SET SCREW ON PROJECTOR BUGGY TO OBTAIN 1/8" GAP WHEN THE LIFT CYLINDER IS FULLY RETRACTED

CONFIDENTIAL

© COPYRIGHT 2009 HARSCO. THIS DRAWING OR DOCUMENT IS THE PROPERTY OF HARSCO AND EMBODIES CONFIDENTIAL INFORMATION, TRADE SECRET INFORMATION, AND/OR KNOW-HOW THAT IS THE PROPERTY OF HARSCO. BY ACCEPTING THIS DRAWING OR DOCUMENT, THE RECIPIENT AGREES (1) NOT TO PROVIDE, OR OTHERWISE MAKE AVAILABLE, THE DRAWING OR DOCUMENT, OR ANY INFORMATION OR KNOW-HOW EMBODIED THEREIN, TO ANY THIRD PARTY AND (2) NOT TO REPRODUCE OR USE THE DRAWING OR DOCUMENT TO MANUFACTURE ANY APPARATUS OR DEVICE, WITHOUT THE PRIOR WRITTEN AUTHORIZATION OF HARSCO.

SOLID EDGE DRAWING

IMPLIED TOLERANCES

ALL DIMENSIONS ARE IN INCHES - TOLERANCE UNLESS OTHERWISE SPECIFIED

NOMINAL SIZE RANGE OVER	TO	RIDE PLUS OR MINUS ±FRACT. DECIMAL	±FRACT. DECIMAL	NOMINAL SIZE RANGE OVER	TO	METRIC PLUS OR MINUS ±FRACT. DECIMAL	±FRACT. DECIMAL
0	6	.03	.005	0	150	.8	.10
6	24	.04	.006	150	600	1.0	.20
24	-	.06	.010	600	-	1.5	.25

UNLESS OTHERWISE SPECIFIED ALL MACHINED SURFACES TO BE 125 RMS.
A SURFACE FINISH OF 125 MICRONCHES
ANGULAR TOLERANCE OF ± .50°
CONCENTRICITY WITHIN .010

THIRD ANGLE PROJECTION

UNLESS OTHERWISE SPECIFIED, ALL WELDS SHOULD ADHERE TO THE MOST CURRENT AWS WELDING STANDARDS

CHANGE	R/L	REVISION	DATE
100693	C	WAS ME10 DWG W/SEP P/L, IT-7 & 8 QTY WAS 2, IT-46 WAS A5638T01, IT-51 QTY WAS 100, DELETED IT-61, 0-3304105-0-13 QTY-1	12-08-09
ECN-101706	D	DELETED IT-45, 2686548	03-31-09
ECS00744	E	REDRAFTED BASED ON SE MODEL BY HARSCO INDIA, PARTS LIST REARRANGED	11-11-10

Description: BUGGY LIFT SYSTEM

Drawing Number: ——————

Machine Type: MARK IV

Model: H5953VAA.asm

Weight: 3055.8 lbm

Scale: 1:8

Drawn: bpayyadakath, 11 Nov 10

KPD Eng: BPA, KPD Dsng: HW

Part Number: H5953VAA

Size: E

Sheet: 2 of 2

Inch [mm]

HARSCO RAIL

Plotted by bpayyadakkath on 3/22/2011 H5953VAA.dft

ENG.DWG.NO.
G7733YAA

REVISIONS							
NO	ER	DESCRIPTION	ZONE	DR	CK	APP	MF
1	11309.2	NEW RELEASE		JBR			
2	11309.6	IT-7 WAS D5507T09 11/3/98	X-X	JBR	DGV	AML	
3	11711	(5-1/4) WAS (4-3/4) 07/29/99	X-X	TCW	DGV	JBR	

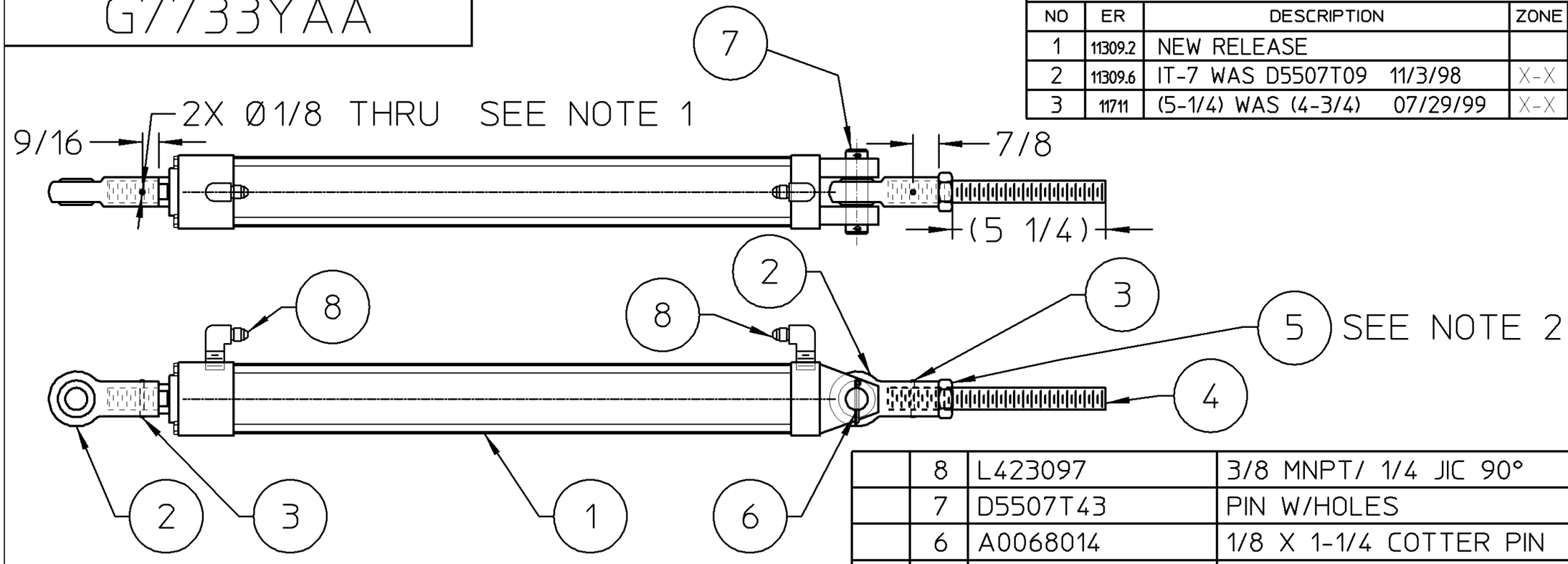

NOTES:
1. AFTER SECURELY TIGHTENING ROD END DRILL Ø1/8 HOLE AND INSERT ROLL PIN
2. TIGHTEN JAM NUT BEFORE DRILLING

PLOT SCALE = -4

FIG NO.	ITEM NO.	PART NUMBER	DESCRIPTION AND MATERIAL SIZE (REF.ONLY)	QTY
	8	L423097	3/8 MNPT/ 1/4 JIC 90°	2
	7	D5507T43	PIN W/HOLES	1
	6	A0068014	1/8 X 1-1/4 COTTER PIN	2
	5	A0056011	5/8-18 HEX JAM NUT	1
	4	G7745Y01	THREADED ROD	1
	3	L41005	1/8 X 1-1/4 ROLL PIN	2
	2	0-3652049-0-04	ROD END (FEMALE)	2
	1	A1593Y12	HYDRAULIC CYLINDER	1

IMPLIED TOLERANCES
ALL DIMENSIONS ARE IN INCHES-TOLERANCE UNLESS OTHERWISE SPECIFIED

NOMINAL SIZE RANGE		PLUS OR MINUS			NOMINAL SIZE RANGE		PLUS OR MINUS		
OVER	TO	FRACTION	2 PLACE DECIMAL	3 PLACE DECIMAL	OVER	TO	FRACTION	2 PLACE DECIMAL	3 PLACE DECIMAL
-	1	1/64	.01	.003	6	24	3/64	.03	.008
1	6	1/32	.02	.005	24	-	1/16	.05	.010

AUGULAR DIMENSIONS PLUS OR MINUS 1 DEGREE

√ ALL MACHINED SURFACES TO HAVE A SURFACE FINISH OF 125 MICROINCHES UNLESS OTHERWISE SPECIFIED.

WEIGHT lbs.

3rd ANGLE PROJECTION

DO NOT SCALE

WELDING SPECIFICATION
UNLESS OTHERWISE SPECIFIED ALL WELDS SHOULD ADHERE TO FAIRMONT TAMPER WELDING SPECIFICATION 101

DESCRIPTION (24)
BUGGY LIFT CYLINDER ASSY

DRAWN J Rowell	DATE 09/21/98	MACHINE TYPE MARK IV
CHECKED HW	DATE 09/30/98	
APP-ENG A.Lindsey	DATE 09/30/98	
SHEET 1	CONT. ON —	
LAST ECR. 11711 .22	CHECKED dvan DATE 17-Aug-99	ENG.DWG.NO. G7733YAA

Fairmont Tamper™
2401 Edmund Road-Box 20
Cayce-West Columbia,
South Carolina 29171-0020
(803) 822-9160

ENG.DWG.NO.
C7417XAA

REVISIONS							
NO	ER	DESCRIPTION	ZONE	DR	CK	APP	MF
1	5860 .31	NEW RELEASE					
2	6711 .8	ADDED ITEMS 8-10; IT-2 WAS A1299Y02; IT-7 WAS L420969; QTY IT-5 WAS 1; QTY IT-4 WAS 4; PICTORIAL CHANGES.		HAP	DGV	AML	
3		ADDED 1/4 x 1/2 CHAMFER		HAP		AML	

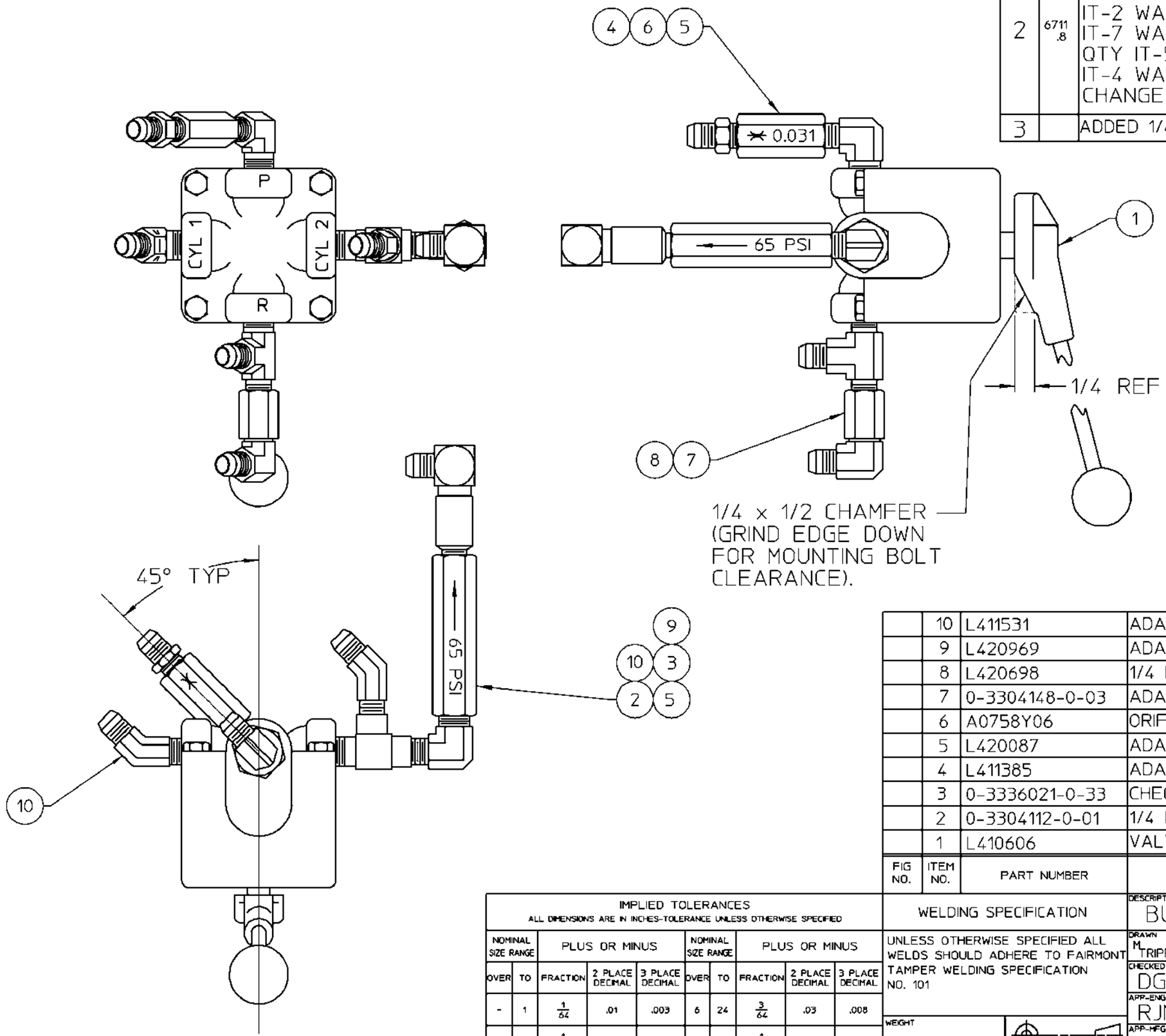

FIG NO.	ITEM NO.	PART NUMBER	DESCRIPTION AND MATERIAL SIZE (REF.ONLY)	QTY
	10	L411531	ADAPTER 1/4 MP-JIC 45°	2
	9	L420969	ADAPTER 1/4 MP-JIC 90°	1
	8	L420698	1/4 MP-JIC-JIC TEE	1
	7	0-3304148-0-03	ADAPTER 1/4 SWIVEL JIC-JIC 90°	1
	6	A0758Y06	ORIFICE FITTING 0.031	1
	5	L420087	ADAPTER 1/4 MP-MP 90°	2
	4	L411385	ADAPTER 1/4 MP-JIC STR	1
	3	0-3336021-0-33	CHECK VALVE 1/4 FP	1
	2	0-3304112-0-01	1/4 MP-FP-FP TEE	1
	1	L410606	VALVE, 4-WAY HYDR.	1

IMPLIED TOLERANCES
ALL DIMENSIONS ARE IN INCHES-TOLERANCE UNLESS OTHERWISE SPECIFIED

NOMINAL SIZE RANGE		PLUS OR MINUS			NOMINAL SIZE RANGE		PLUS OR MINUS		
OVER	TO	FRACTION	2 PLACE DECIMAL	3 PLACE DECIMAL	OVER	TO	FRACTION	2 PLACE DECIMAL	3 PLACE DECIMAL
-	1	1/64	.01	.003	6	24	3/64	.03	.008
1	6	1/32	.02	.005	24	-	1/16	.05	.010

ANGULAR DIMENSIONS PLUS OR MINUS 1 DEGREE

√ ALL MACHINED SURFACES TO HAVE A SURFACE FINISH OF 125 MICRONCHES UNLESS OTHERWISE SPECIFIED.

WELDING SPECIFICATION

UNLESS OTHERWISE SPECIFIED ALL WELDS SHOULD ADHERE TO FAIRMONT TAMPER WELDING SPECIFICATION NO. 101

WEIGHT lbs.

3rd ANGLE PROJECTION

DO NOT SCALE

SHEET 1 CONT. ON –

DESCRIPTION (24
BUGGY LIFT VALVE ASSY

DRAWN M TRIPPE	DATE 3/3/92	MACHINE TYPE MARK IV	
CHECKED DGV	DATE 3/12/92	Fairmont Tamper™ 2401 Edmund Road-Box 20 Coyce-West Columbia, South Carolina 29171-0020 (803) 822-9160	
APP-ENG RJM	DATE 3/12/92		
APP-MFG	DATE		
LAST ECR. 6711. 11	CHECKED jgg DATE 15-Feb-94	ENG.DWG.NO. C7417XAA	

THIS DOCUMENT CONTAINS PROPRIETARY INFORMATION AND SUCH INFORMATION MAY NOT BE DISCLOSED TO OTHERS FOR ANY PURPOSE OR USED FOR MANUFACTURING PURPOSES WITHOUT THE WRITTEN PERMISSION OF FAIRMONT TAMPER.

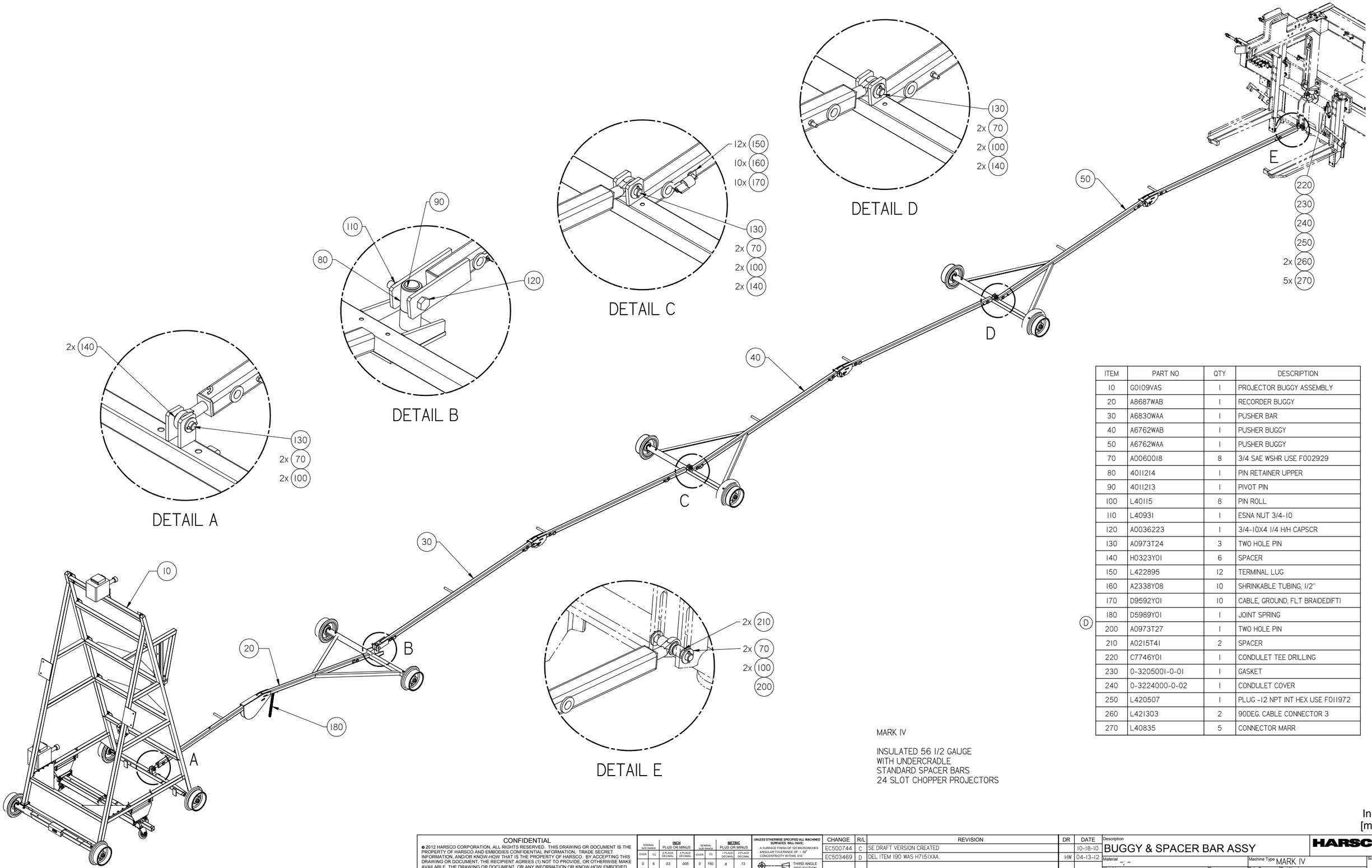

ITEM	PART NO	QTY	DESCRIPTION
10	G0109VAS	1	PROJECTOR BUGGY ASSEMBLY
20	A8687WAB	1	RECORDER BUGGY
30	A6830WAA	1	PUSHER BAR
40	A6762WAB	1	PUSHER BUGGY
50	A6762WAA	1	PUSHER BUGGY
70	A0060018	8	3/4 SAE WSHR USE F002929
80	4011214	1	PIN RETAINER UPPER
90	4011213	1	PIVOT PIN
100	L40115	8	PIN ROLL
110	L40931	1	ESNA NUT 3/4-10
120	A0036223	1	3/4-10X4 1/4 H/H CAPSCR
130	A0973T24	3	TWO HOLE PIN
140	H0323Y01	6	SPACER
150	L422895	12	TERMINAL LUG
160	A2338Y08	10	SHRINKABLE TUBING, 1/2"
170	D9592Y01	10	CABLE, GROUND, FLT BRAIDEDIFTI
180	D5989Y01	1	JOINT SPRING
200	A0973T27	1	TWO HOLE PIN
210	A0215T41	2	SPACER
220	C7746Y01	1	CONDULET TEE DRILLING
230	0-3205001-0-01	1	GASKET
240	0-3224000-0-02	1	CONDULET COVER
250	L420507	1	PLUG -12 NPT INT HEX USE F011972
260	L421303	2	90DEG. CABLE CONNECTOR 3
270	L40835	5	CONNECTOR MARR

MARK IV

INSULATED 56 1/2 GAUGE
WITH UNDERCRADLE
STANDARD SPACER BARS
24 SLOT CHOPPER PROJECTORS

Inch
[mm]

CONFIDENTIAL
© 2012 HARSCO CORPORATION, ALL RIGHTS RESERVED. THIS DRAWING OR DOCUMENT IS THE PROPERTY OF HARSCO AND EMBODIES CONFIDENTIAL INFORMATION, TRADE SECRET INFORMATION, AND/OR KNOW-HOW THAT IS THE PROPERTY OF HARSCO. BY ACCEPTING THIS DRAWING OR DOCUMENT, THE RECIPIENT AGREES (1) NOT TO PROVIDE, OR OTHERWISE MAKE AVAILABLE, THE DRAWING OR DOCUMENT, OR ANY INFORMATION OR KNOW-HOW EMBODIED THEREIN, TO ANY THIRD PARTY AND (2) NOT TO REPRODUCE OR USE THE DRAWING OR DOCUMENT TO MANUFACTURE ANY APPARATUS OR DEVICE, WITHOUT THE PRIOR WRITTEN AUTHORIZATION OF HARSCO.

NOMINAL SIZE RANGE		INCH PLUS OR MINUS	
OVER	TO	2 PLACE DECIMAL	3 PLACE DECIMAL
0	6	.03	.005
6	24	.04	.008
24	-	.06	.010

NOMINAL SIZE RANGE		METRIC PLUS OR MINUS	
OVER	TO	1 PLACE DECIMAL	2 PLACE DECIMAL
0	150	.8	.13
150	600	1.0	.20
600	-	1.5	.25

UNLESS OTHERWISE SPECIFIED ALL MACHINED SURFACES WILL HAVE:
A SURFACE FINISH OF 125 MICRONINCHES
ANGULAR TOLERANCE OF ± 50'
CONCENTRICITY WITHIN .010

THIRD ANGLE PROJECTION

UNLESS OTHERWISE SPECIFIED, ALL WELDS SHOULD ADHERE TO THE MOST CURRENT A.W.S WELDING STANDARDS

CHANGE	R/L	REVISION	DR	DATE
EC500744	C	SE DRAFT VERSION CREATED		10-18-10
EC503469	D	DEL ITEM 190 WAS H7151XAA.	HW	04-13-12

Description: BUGGY & SPACER BAR ASSY

HARSCO RAIL

Material: –; –

Machine Type: MARK IV

Size: D

Weight: 2265.6 lbm

Drawn: bpayyadakkath

Date Drawn: 10/21/2010

Part Number: G7897WAK

Sheet: 1 of 1

SOLID EDGE DRAWING

DO NOT SCALE

Item Number	Document Number	Quantity	Title
10	A8214VAC	1	PROJECTOR WELDMENT, RIGHT SIDE
20	A8213VAC	1	PROJECTOR WELDMENT, LEFT SIDE
30	A0036012	10	1/4-20 X 2 3/4 HHCAPSCREW USE
40	A0059001	14	1/4 MED PL WSHR USE F001106
50	L40237	39	ELASTIC STOPNUT #29-NU040 USE
60	A0036005	16	1/4-20 X1 HHCAPSCREW USE
70	0-2100861-0-10	1	SURFACE PROJECTOR ASSY
80	A0036033	4	5/16-18 X 7/8 HHCS USE F002831
90	A0061009	4	5/16 MED LOCK WSHR USE F009546
100*	0-2201452-0-01	4	WHEEL ASSEMBLY, INSULATED
110	A0059003	8	3/8 REG PL WSHR
120	L40387	28	NUT ELASTIC STOP
130	0-3652003-0-03	2	OIL IMPREGNATED FLG BRG
140	0-2306204-0-01	1	PIN
150	A0036003	2	1/4-20 X 3/4 HHCS
160	A0061008	2	1/4 MED LOK WSHR
170	L420607	1	90 DEG ELBOW CABLE CONNE
180	A0071062	9	1/4-20 X 3/4 WELD STUD USE
190*	L411085	17	CABLE 14/2TYPE SOO USE F012780
200	L40347	9	CLAMP CUSHION
210	0-2302674-0-12	2	SPACER BAR
220	A0036065	20	3/8-16 X 1 1/4 HH CAPSCREW
230	5016794	1	BRACKET, ENCLOSURE
240	5009441	1	DISTRIBUTION J-BOX ASSEMBLY
250	F002355	4	DC-HHD CAP SCR1/4-20X3/4GR5
270	A8215XAA	1	AXLE WELDMENT, FRONT
280	A6819WAA	1	AXLE MOUNT
290	A1109YAA	1	PIVOT AXLE
300	0-2302674-0-06	1	SPACER BAR
310	A7019Y01	1	WEAR PAD
320	A0036070	8	3/8-16 X 2 1/2 HH CAPSCREW
330	A8205WAA	1	LOCK UP BRACKET
340	A0052027	4	1/4-20 X 1 FLHD MSCR
350	A7339Y02	4	MOUNTING PAD
370	C7135YAA	1	PROJECTOR SUPPORT TUBE
380	Z683672	4	SHOE TENSION SPRING
390*	0-2405369-0-01	1	CABLE PIN
400	0-3011001-0-09	8	LOCKNUT USE F010606
410	D4827Y01	8	MALE ROD END W/STUD
420	X763526-003	2	CRADLE BRACKET
430	0-2304179-0-01	1	PROJECTOR SUPPORT ARM
440	0-2100917-0-15	1	PROJECTOR SUPPORT CHANNEL ASSY
450	A0056009	16	1/2-20 HEX JAM NUTS
460	A0061013	16	1/2 MED LOK WSHR
470	0-2100861-0-09	1	PROJECTOR ASSY
480	0-3015004-0-03	2	HITCH PIN
490	0-1303699-0-01	1	TUBE
540	L40177	15	CHAIN USE F026227

E

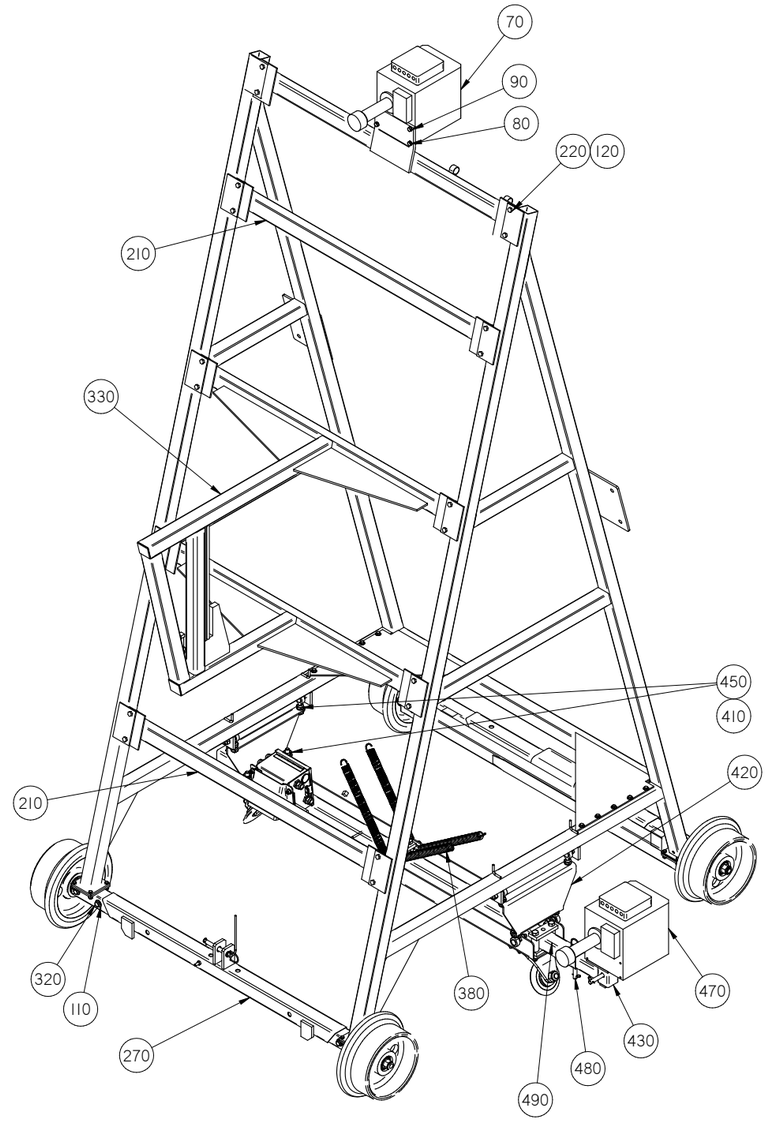

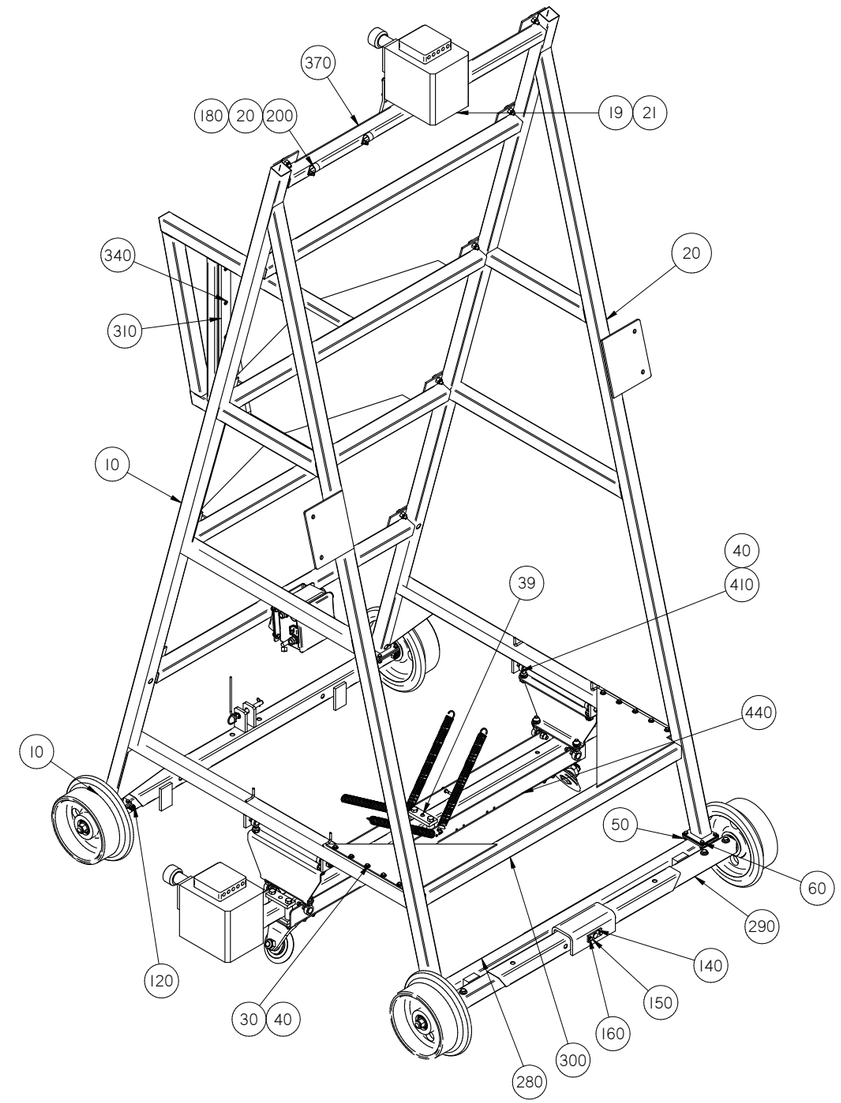

Inch
[mm]

CONFIDENTIAL
© 2012 HARSCO CORPORATION. ALL RIGHTS RESERVED. THIS DRAWING OR DOCUMENT IS THE PROPERTY OF HARSCO AND EMBODIES CONFIDENTIAL INFORMATION, TRADE SECRET INFORMATION, AND/OR KNOW-HOW THAT IS THE PROPERTY OF HARSCO. BY ACCEPTING THIS DRAWING OR DOCUMENT, THE RECIPIENT AGREES (1) NOT TO PROVIDE, OR OTHERWISE MAKE AVAILABLE, THE DRAWING OR DOCUMENT, OR ANY INFORMATION OR KNOW-HOW EMBODIED THEREIN, TO ANY THIRD PARTY AND (2) NOT TO REPRODUCE OR USE THE DRAWING OR DOCUMENT TO MANUFACTURE ANY APPARATUS OR DEVICE, WITHOUT THE PRIOR WRITTEN AUTHORIZATION OF HARSCO.

NOMINAL SIZE RANGE		INCH PLUS OR MINUS	
OVER	TO	2 PLACE DECIMAL	3 PLACE DECIMAL
0	6	.03	.005
6	24	.04	.008
24	-	.06	.010

NOMINAL SIZE RANGE		METRIC PLUS OR MINUS	
OVER	TO	1 PLACE DECIMAL	2 PLACE DECIMAL
0	150	.8	.13
150	600	1.0	.20
600	-	1.5	.25

UNLESS OTHERWISE SPECIFIED ALL MACHINED SURFACES WILL HAVE:
A SURFACE FINISH OF 125 MICROINCHES
ANGULAR TOLERANCE OF +/- 50'
CONCENTRICITY WITHIN: .010

THIRD ANGLE PROJECTION

UNLESS OTHERWISE SPECIFIED, ALL WELDS SHOULD ADHERE TO THE MOST CURRENT A.W.S WELDING STANDARDS

CHANGE	R/L	REVISION	DR	DATE
EC503235	E	ITRM 230 WAS 5008267	HW	03-19-12

Description: PROJECTOR BUGGY ASSEMBLY

HARSCO RAIL

Material: --, --

Machine Type: MARK IV

Size: D

Weight: 826.7 lbm

Drawn: bpayyadakkath

Date Drawn: 9/27/2010

Part Number: G0109VAS

Sheet: 1 of 2

SOLID EDGE DRAWING

DO NOT SCALE

COMPONENT	WIRE NUMBERS
SURFACING PROJECTOR	0216.000
LINING PROJECTOR	0215.000
DUAL REF PROJECTOR (OPTION)	0214.000
LASER CONTROL PANEL (OPTION)	0218.000

NOTE: LASER CONTROL PANEL OPTION WIRING:
WHITE: 0218, BLACK: 000.

FOR WIRING, SEE NOTE #2

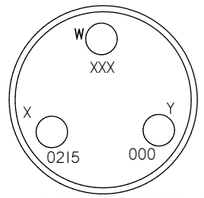

LINING PROJECTOR RECEPTABLE WIRING

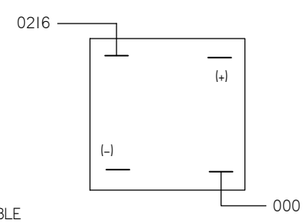

SURFACING PROJECTOR WIRING

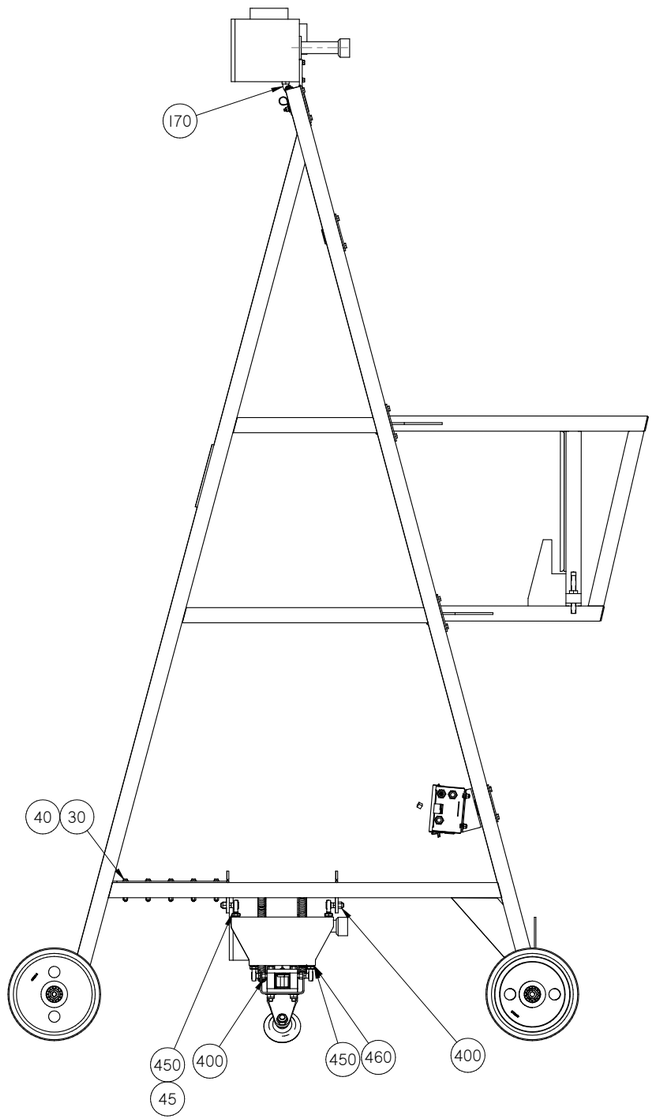

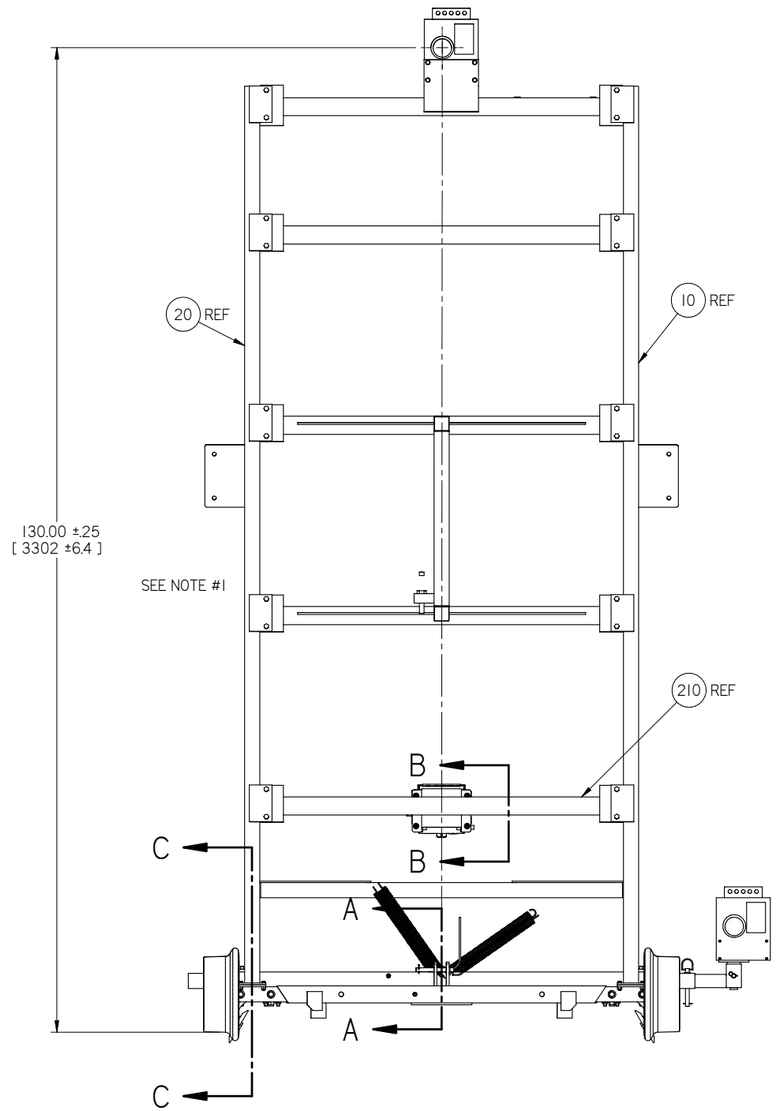

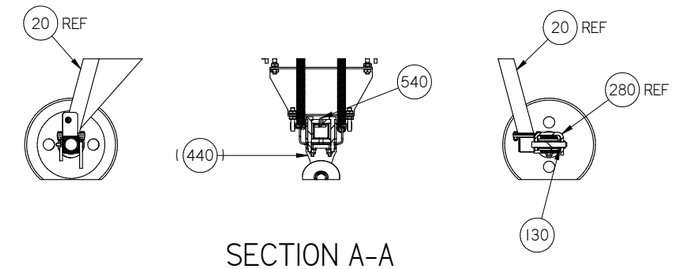

SECTION A-A

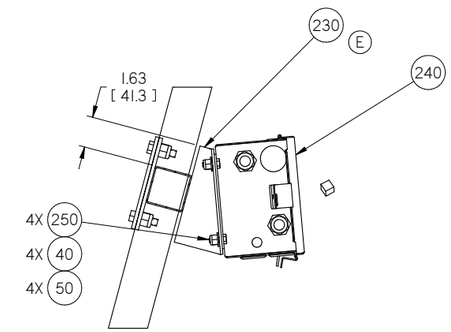

SECTION B-B

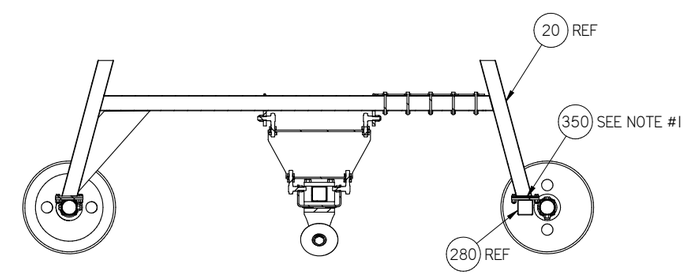

SECTION C-C

24 SLOT CHOPPER PROJECTORS WITH UNDERCRADLE INSULATED.

NOTES:

1. USE SHIMS, ITEM 35 AS REQUIRED FOR 130" HEIGHT.

2. ROUTE CABLE (IT.21) FROM RECEPTABLE BOX (IT.24) TO HOLE IN FRAME, USING GROMMET (IT.36) TO FEED THRU TUBE TO TOP.
USE STRAIN RELIEF (IT.19) TO RUN CABLE IN TO SURFACE PROJECTOR ASSY (IT.7). USE WIRE NUTS TO TIE WIRES TOGETHER IN RECEPTABLE BOX.

Inch
[mm]

CONFIDENTIAL
© 2012 HARSCO CORPORATION, ALL RIGHTS RESERVED. THIS DRAWING OR DOCUMENT IS THE PROPERTY OF HARSCO AND EMBODIES CONFIDENTIAL INFORMATION, TRADE SECRET INFORMATION, AND/OR KNOW-HOW THAT IS THE PROPERTY OF HARSCO. BY ACCEPTING THIS DRAWING OR DOCUMENT, THE RECIPIENT AGREES (1) NOT TO PROVIDE, OR OTHERWISE MAKE AVAILABLE, THE DRAWING OR DOCUMENT, OR ANY INFORMATION OR KNOW-HOW EMBODIED THEREIN, TO ANY THIRD PARTY AND (2) NOT TO REPRODUCE OR USE THE DRAWING OR DOCUMENT TO MANUFACTURE ANY APPARATUS OR DEVICE, WITHOUT THE PRIOR WRITTEN AUTHORIZATION OF HARSCO.

NOMINAL SIZE RANGE		INCH PLUS OR MINUS		NOMINAL SIZE RANGE		METRIC PLUS OR MINUS	
OVER	TO	2 PLACE DECIMAL	3 PLACE DECIMAL	OVER	TO	1 PLACE DECIMAL	2 PLACE DECIMAL
0	6	.03	.005	0	150	.8	.13
6	24	.04	.008	150	600	1.0	.20
24	-	.06	.010	600	-	1.5	.25

UNLESS OTHERWISE SPECIFIED ALL MACHINED SURFACES WILL HAVE:
A SURFACE FINISH OF 125 MICROINCHES
ANGULAR TOLERANCE OF ± 50"
CONCENTRICITY WITHIN .010

THIRD ANGLE PROJECTION

UNLESS OTHERWISE SPECIFIED, ALL WELDS SHOULD ADHERE TO THE MOST CURRENT A W S WELDING STANDARDS

CHANGE	R/L	REVISION	DR	DATE
EC503235	E	ITRM 230 WAS 5008267	HW	03-19-12

Description: PROJECTOR BUGGY ASSEMBLY

HARSCO RAIL

Material: –, –
Machine Type: MARK IV
Size: D
Weight: 826.7 lbm
Drawn: bpayyadakkath
Date Drawn: 09/27/2010
Part Number: G0109VAS
Sheet: 2 of 2

SOLID EDGE DRAWING
DO NOT SCALE

CONFIDENTIAL
© COPYRIGHT 2009 HARSCO. THIS DRAWING OR DOCUMENT IS THE PROPERTY OF HARSCO AND EMBODIES CONFIDENTIAL INFORMATION, TRADE SECRET INFORMATION, AND/OR KNOW-HOW THAT IS THE PROPERTY OF HARSCO. BY ACCEPTING THIS DRAWING OR DOCUMENT, THE RECIPIENT AGREES (1) NOT TO PROVIDE, OR OTHERWISE MAKE AVAILABLE, THE DRAWING OR DOCUMENT, OR ANY INFORMATION OR KNOW-HOW EMBODIED THEREIN, TO ANY THIRD PARTY AND (2) NOT TO REPRODUCE OR USE THE DRAWING OR DOCUMENT TO MANUFACTURE ANY APPARATUS OR DEVICE, WITHOUT THE PRIOR WRITTEN AUTHORIZATION OF HARSCO.

SOLID EDGE DRAWING

Item Number	Document Number	Title	Quantity
1	X685831	10" WHEEL	1
2	L40213	BEARING	2
3	A0059031	5/8 PLAIN WASHER MED	1
4	Z62175	INSULATING WASHER	2
5	L40006	ESNA NUT 5/8-11	1
6	Z685917	INSULATING BUSHING	1
7	0-1304933-0-01	WHEEL SHAFT	1
8	L40001	RETAINING RING	1

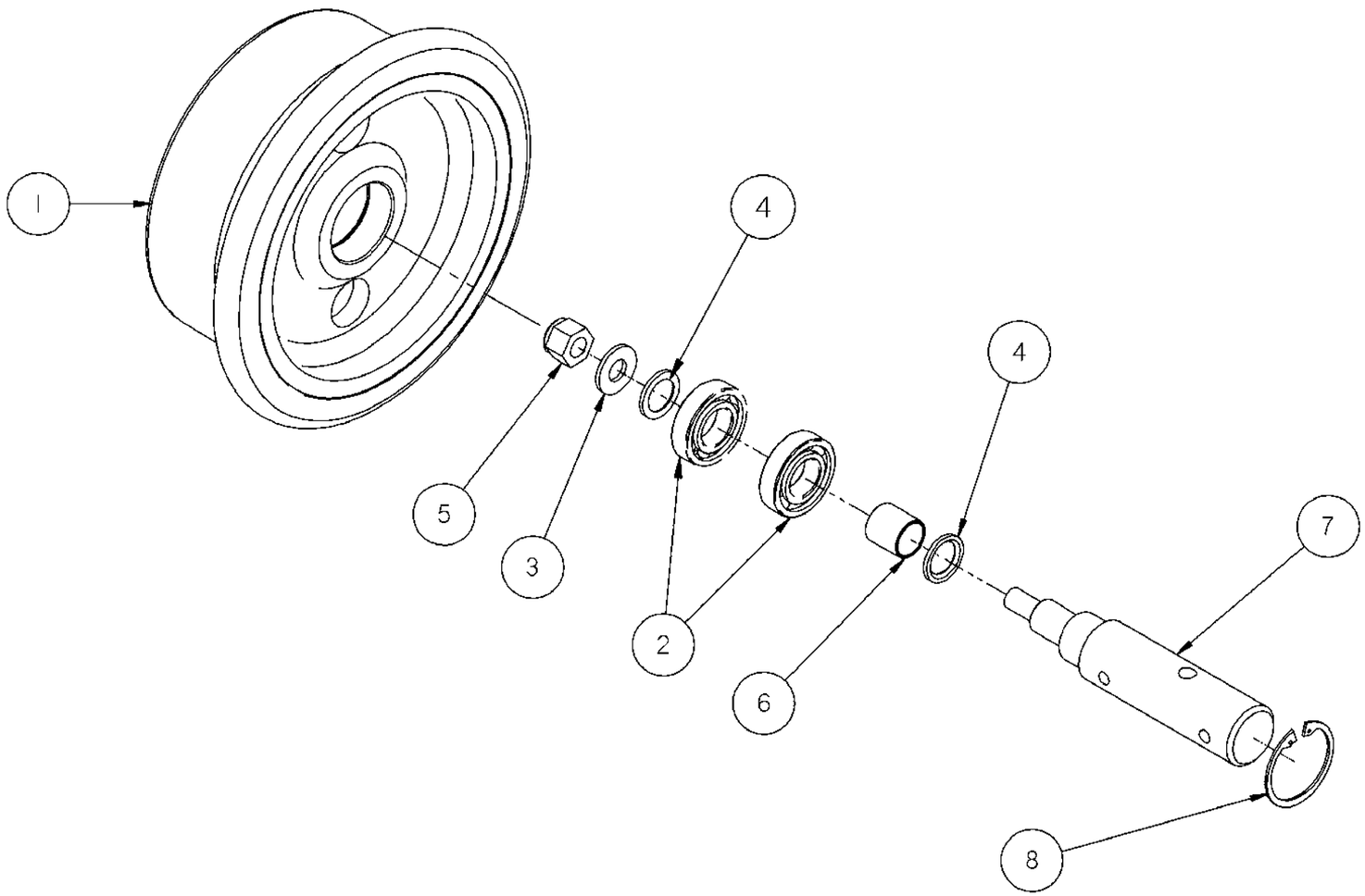

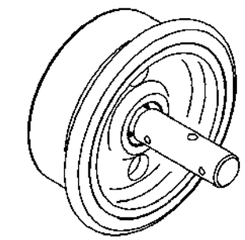

Inch
[mm]

IMPLIED TOLERANCES
ALL DIMENSIONS ARE IN INCHES - TOLERANCE UNLESS OTHERWISE SPECIFIED

NOMINAL SIZE RANGE		INCH PLUS OR MINUS		NOMINAL SIZE RANGE		METRIC PLUS OR MINUS	
OVER	TO	2 PLACE DECIMAL	3 PLACE DECIMAL	OVER	TO	1 PLACE DECIMAL	2 PLACE DECIMAL
0	6	.03	.005	0	150	.8	.13
6	24	04	.008	150	600	1.0	.20
24	-	.06	.010	600	-	1.5	.25

UNLESS OTHERWISE SPECIFIED, ALL MACHINED SURFACES WILL HAVE:
A SURFACE FINISH OF 125 MICROINCHES
ANGULAR TOLERANCE OF ± .50°
CONCENTRICITY WITHIN .010

THIRD ANGLE PROJECTION

UNLESS OTHERWISE SPECIFIED, ALL WELDS SHOULD ADHERE TO THE MOST CURRENT A.W.S WELDING STANDARDS

CHANGE	R/L	REVISION	DATE
ECN-106355	H	REDRAFTED IN NEW TEMPLATE	09-03-10

Description: WHEEL ASSEMBLY, INSULATED

Drawing Number: ----------

Machine Type: MARK IV

Model: 0-2201452-0-01.asm!Member1

Drawn: bpayyadakkath

Date Drawn: 03 Sept 10

Weight: 19.9 lbm

Scale: 1:4

APVD Desg: BPA

APVD ChEng: HW

Mat'l

HARSCO RAIL

Part Number: 0-2201452-0-01

Size: B

Sheet: 1 of 1

Plotted by bpayyadakkath on 9/3/2010 0-2201452-0-01.dft

ENG.DWG.NO.
0-2100861-0-09

REVISIONS							
NO	ER	DESCRIPTION	ZONE	DR	CK	APP	MF
18	12183 .1	REDRAWN ON CAD, AND REVISED FOR CLARITY. DEL IT.43 & VIEW 'C'. ADD NOTES 10, 11 & VIEW 'D'.		EP	HW	WG	
S	13081 .18	ADDED ITEMS 77 & 78.		CJW	JBR	JBR	

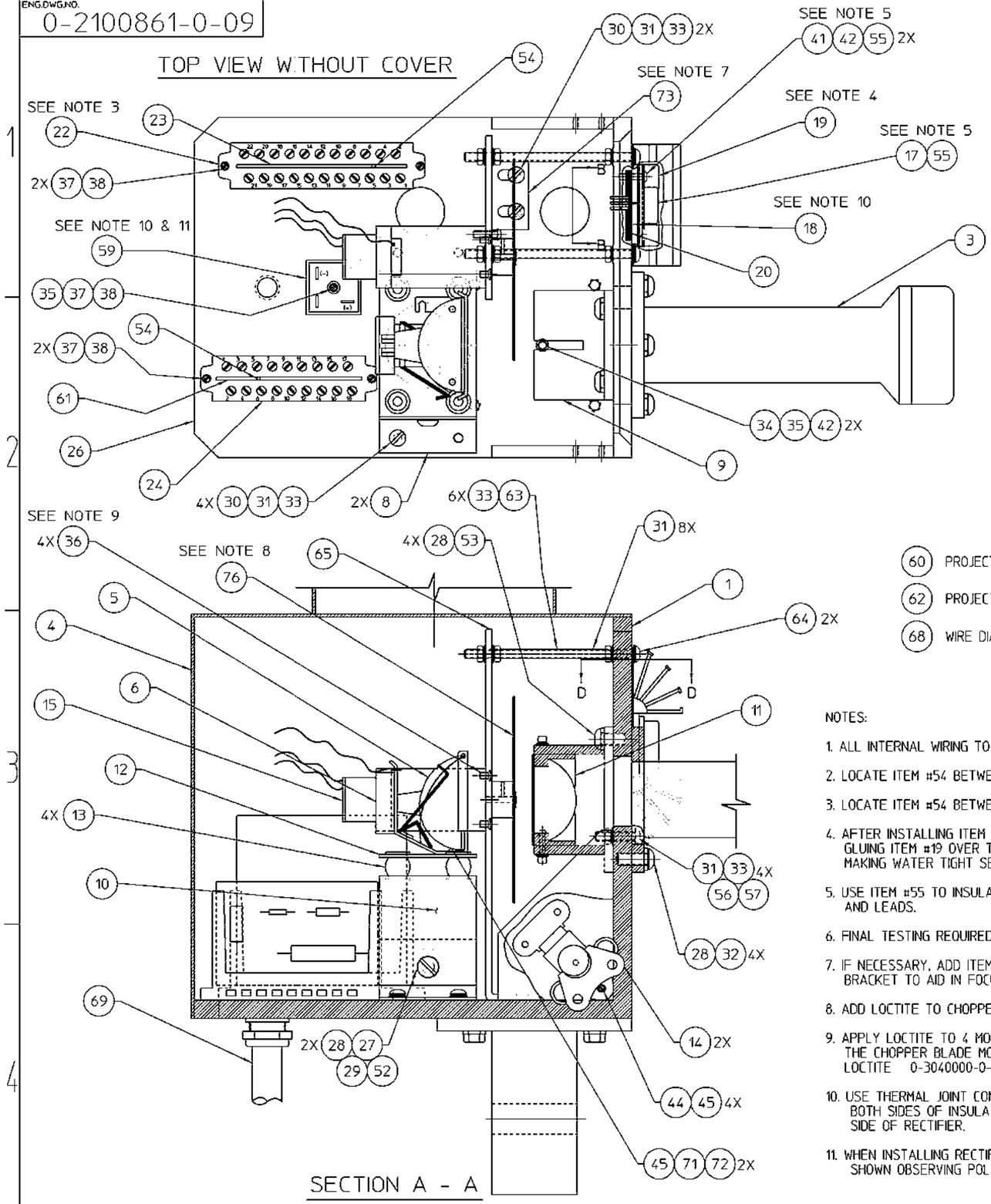

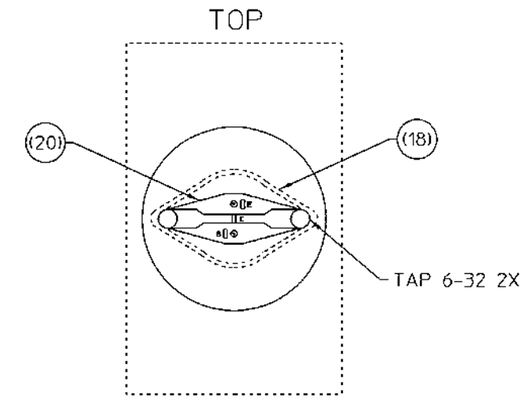

VIEW "B - B"
ENLARGED FOR MOUNTING

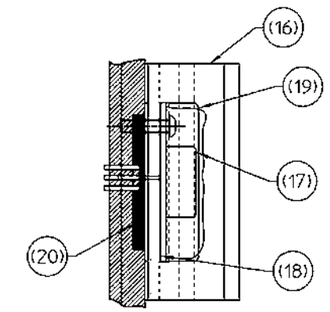

VIEW "D - D"
ENLARGED FOR MOUNTING

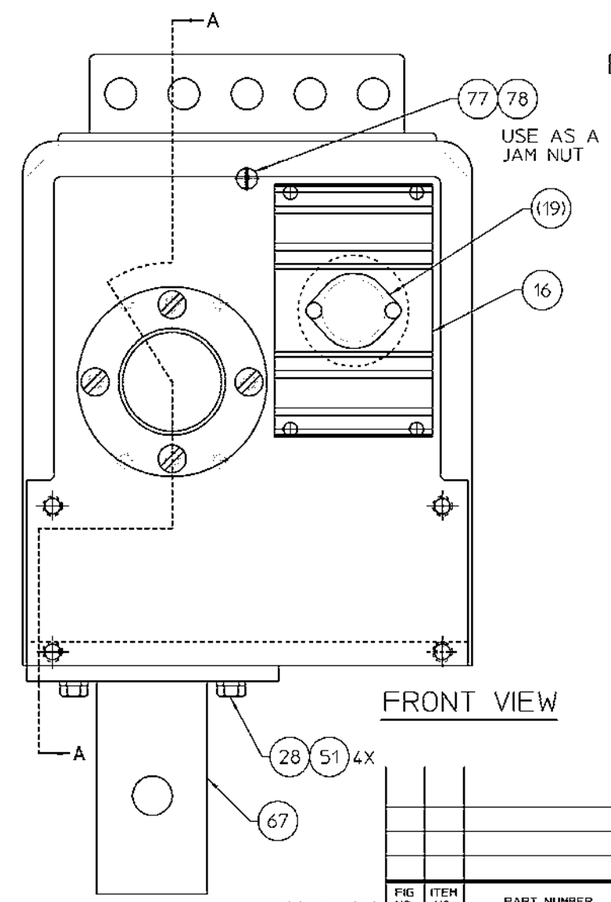

FRONT VIEW

(60) PROJECTOR ASSY SCHEMATIC

(62) PROJECTOR SET-UP

(68) WIRE DIAGRAM

NOTES:

1. ALL INTERNAL WIRING TO BE #18 AWG.
2. LOCATE ITEM #54 BETWEEN TERMINALS #5 & #6.
3. LOCATE ITEM #54 BETWEEN TERMINALS #4 & #5.
4. AFTER INSTALLING ITEM #17 USE SILICONE FOR GLUING ITEM #19 OVER THE FACE OF ITEM #17 MAKING WATER TIGHT SEAL.
5. USE ITEM #55 TO INSULATE TRANSISTOR SCREWS AND LEADS.
6. FINAL TESTING REQUIRED.
7. IF NECESSARY, ADD ITEM #73 (SHIM) TO MOTOR BRACKET TO AID IN FOCUSING.
8. ADD LOCTITE TO CHOPPER BLADE SET SCREWS.
9. APPLY LOCTITE TO 4 MOUNTING SCREWS FOR THE CHOPPER BLADE MOTOR. LOCTITE 0-3040000-0-06
10. USE THERMAL JOINT COMPOUND (L422653) ON BOTH SIDES OF INSULATOR, AND ON BOTTOM SIDE OF RECTIFIER.
11. WHEN INSTALLING RECTIFIER, INSTALL AS SHOWN OBSERVING POLARITY (-), (+).

FIG NO.	ITEM NO.	PART NUMBER	DESCRIPTION AND MATERIAL SIZE (REF.ONLY)	QTY

IMPLIED TOLERANCES
ALL DIMENSIONS ARE IN INCHES-TOLERANCE UNLESS OTHERWISE SPECIFIED

NOMINAL SIZE RANGE		PLUS OR MINUS			NOMINAL SIZE RANGE		PLUS OR MINUS		
OVER	TO	FRACTION	2 PLACE DECIMAL	3 PLACE DECIMAL	OVER	TO	FRACTION	2 PLACE DECIMAL	3 PLACE DECIMAL
-	1	1/64	.01	.003	6	24	3/64	.03	.008
1	6	1/32	.02	.005	24	-	1/16	.05	.010

ANGULAR DIMENSIONS PLUS OR MINUS 1 DEGREE
√ ALL MACHINED SURFACES TO HAVE A SURFACE FINISH OF 125 ROOTINCHES UNLESS OTHERWISE SPECIFIED.

WELDING SPECIFICATION

UNLESS OTHERWISE SPECIFIED ALL WELDS SHOULD ADHERE TO FAIRMONT TAMPER WELDING SPECIFICATION NO. 101

WEIGHT — 3rd ANGLE PROJECTION

DO NOT SCALE

SHEET 1 CONT. — ON —

DESCRIPTION (24): PROJECTOR ASSY, IRE SYS

DRAWN S. BACON	DATE	MACHINE TYPE MARK IV, MKVI
CHECKED CB ROGERS	DATE	
APP-ENG	DATE	Fairmont Tamper™ 2601 Edmund Road-Box 20 Cayce-West Columbia, South Carolina 29171-0020 (803) 822-9160
APP-MFG	DATE	
LAST ECR. 13081 .18	CHECKED dvgn DATE 2-Sep-05	DWG/DWG.NO. 0-2100861-0-09

THIS DOCUMENT CONTAINS PROPRIETARY INFORMATION AND SUCH INFORMATION MAY NOT BE DISCLOSED TO OTHERS FOR ANY PURPOSE OR USED FOR MANUFACTURING PURPOSES WITHOUT THE WRITTEN PERMISSION OF FAIRMONT TAMPER.

PARTS LIST

ITEM NO	PART NUMBER	DESCRIPTION	QUANTITY
1	0-1100860-0-01	PROJ HOUSING DRILLING	1
~~2~~	~~0-1201171-0-01~~	~~MOTOR MOUNTING BRKT~~	~~0~~
3	Y684614	INFRARED FILTER ASSEMBLY	1
4	X752836A	COVER ASSY	1
5	B9263Y01	PROJECTOR BULB	1
6	C8106Y01	SOCKET RWK, D.C.	1
~~7~~	~~Y684121B~~	~~CHOPPER BLADE ASSY~~	~~0~~
8	Z684284	LAMP BRKT	2
9	Y683992	LENS HOLDER BRKT	1
10	C1182X01	BRACKET	1
11	Z684112	PROJ LENS HOLDER ASSY	1
12	C1192Y01	ALUMINUM	1
13	L411271	SHOCK ABSORBER	4
14	L41620	SPRING FASTENER	2
15	0-3187013-0-01	PROJECTOR MOTOR	1
16	0-1404878-0-01	HEAT SINK REWORK	1
17	L424961	DARLINGTON POWER TRANSIS	1
18	0-3204003-0-01	INS, POWER SEMICONDUCTOR	1
19	0-3204002-0-01	TO-3 CASE INSULTNG COVER	1
20	L422417	TRANSISTOR SOCKET	1
~~21~~	~~0-1302129-0-01~~	~~MOTOR HEAT SHIELD JRE~~	~~0~~
22	0-3237004-0-01	PCB CONN CARD GUIDE	1
23	0-2302202-0-01	CONTROL BOARD	1
24	0-3237004-0-02	PCB CONN CARD GUIDE	1
~~25~~	~~0-2302250-0-01~~	~~LAMP VOLTAGE CONTROL BOARD~~	~~0~~
26	A9297Y02	COPPER WIRE, 18AWG	8
27	A0036001	1/4-20 X 1/2 HHCS	2
28	A0061008	1/4 MEDIUM LOCK WASHER	10
29	A0055009	1/4-20 HEX NUT	2
30	A0050053	10-24 X 3/8 PL RD HD MS	6
31	A0059025	10 MEDIUM PLTD FL WASH	18
32	A0050077	1/4-20 X 5/8 RD HD MS	4
33	A0061006	10 PLATED LOCK WASHER	16

ASSEMBLY IDENTIFIER

MKIV / MKVI IRE LINER

REVISIONS

NO	ER	DESCRIPTION	DR	CK	APP	MF
18	12183.1	SEPARATED FROM TABS 01-08. ADD TO DATA BASE. IT.26 WAS L411094 QTY OF 1. IT.30 QTY WAS 9. IT.31 QTY WAS 8.	EP	HW	WG	
S		NO CHANGE				

ASSEMBLY DESCRIPTION

ER
DR
CK
APP
MF

Fairmont Tamper™
2401 Edmund Road-Box 20
Cayce-West Columbia,
South Carolina 29171-0020
(803) 822-9160

DWG NO 0-2100861-0-09

SHEET 1 CONT ON 2

DESCRIPTION (24) PROJECTOR ASSY, IRE SYS

DRAWN S. BACON

DATE

CHECKED CB ROGERS

DATE

APP

DATE

APP

DATE

SHEET 1 CONT ON 2

LAST ECR. 13081 .18

CHECKED dvan

DATE 2-Sep-05

DWG NO 0-2100861-0-09

PARTS LIST

ITEM NO	PART NUMBER	DESCRIPTION	QUANTITY
34	A0041004	6-32 X 1/2 SOC HD CS GR8	2
35	A0059024	6 MEDIUM PLATED FL WASH	3
36	A0052006	6-32 X 1/4 PL FL HD MS	4
37	A0050102	5-40 X 1/2 PL RD HD MS	5
38	A0061003	5 PLATED LOCK WASHER	5
~~39~~		~~#5-40 X 3/8 SL RD HD MACH SCR~~	~~0~~
~~40~~		~~#5 HEX NUT~~	~~0~~
41	A0050025	6-32 X 1/2 PL RD HD MS	2
42	A0061004	6 PLATED LOCK WASHER	4
~~43~~		~~#6 HEX NUT~~	~~2~~
44	A0071125	4-40 X 1/4 PL HHCS	4
45	A0061002	4 PLATED LOCK WASHER	6
~~46~~		~~1/8 DIA X 1/4 LG POP RIVET~~	~~0~~
~~47~~	~~0-2404860-0-01~~	~~CABLE CL128~~	~~0~~
~~48~~	~~0-2302049-0-01~~	~~ADAPTER PLATE ASSY~~	~~0~~
~~49~~	~~L40177~~	~~CHAIN 12 in.~~	~~0~~
~~50~~	~~L422001~~	~~PIP PIN~~	~~0~~
51	A0036003	1/4-20 X 3/4 HHCS	4
52	A0059001	1/4 MEDIUM FLAT WASHER	2
53	A0050076	1/4-20 X 1/2 RD HD MS	4
54	L422468	POLARIZING KEY	2
55	L422146	SHRINK TUBING,1/8" (1")	1
56	A0071136	10-24 X 3/4 PL HHCS	4
57	A0055006	10-24 PLATED HEX NUT	4
~~58~~	~~0-2305661-0-01~~	~~CABLE 750~~	~~0~~
59	0-3152004-0-06	BRIDGE RECTIFIER	1
60	0-1203294-0-01	PROJ ASS'Y SCHEMATIC	REF
61	0-2306408-0-01	CONTROL BOARD	1
62	A3406Y01	PROJECTOR SET-UP	REF
63	A0055039	10-24 PLATED HEX NUT	6
64	A0050094	10-24 X 3-1/2 PL RD HDMS	2
65	A4553X01	BRACKET,MOTOR	1
~~66~~	~~Z754020C~~	~~CHOPPER DISK ASSY~~	~~0~~

ASSEMBLY IDENTIFIER

MKIV / MKVI IRE LINER

ASSEMBLY DESCRIPTION

ER
DR
CK
APP
MF

REVISIONS

NO	ER	DESCRIPTION	DR	CK	APP	MF
18	12183.1	IT.35 QTY WAS 2. IT.37 & 38 QTY WAS 4. IT.41 WAS A0050019. DEL IT.43. IT.51 WAS A0036007. IT.52 QTY WAS 3. IT.62 WAS QTY OF 1.	EP	HW	WG	
S		NO CHANGE				

SHEET 2 CONT ON 3
LAST ECR. 13081 .18
CHECKED dvan
DATE 2-Sep-05
DWG NO 0-2100861-0-09

DWG NO 0-2100861-0-09
SHEET 2
CONT ON 3
DESCRIPTION (24) PROJECTOR ASSY, IRE SYS
DRAWN S BACON
DATE
CHECKED CB ROGERS
DATE
APP
DATE
APP
DATE

Fairmont Tamper™
2401 Edmund Road-Box 20
Cayce-West Columbia,
South Carolina 29171-0020
(803) 822-9160

PARTS LIST

ITEM NO	PART NUMBER	DESCRIPTION	QUANTITY
67	0-2304178-0-01	PROJECTOR MTG BRKT	1
68	A6118X01	WIRE DIAGRAM	REF
69	A6120YAA	CABLE CL1177	1
~~70~~	~~B5946XAA~~	~~PROJECTOR LENS HOUSING~~	~~0~~
71	A0050008	4-40 X 1/4 PL RD HD MS	2
72	A0055002	4-40 PLATED HEX NUT	2
73	N/A	BRASS SHIM STOCK	REF
~~74~~	~~C3329X01~~	~~PROJECTOR ASS'Y SCHEMATIC~~	~~0~~
~~75~~	~~C3324YAA~~	~~PROJ LAMP VOLT CONTROL ASSY~~	~~0~~
76	Z754020A	CHOPPER DISK ASSY	1
77	A0050057	10-24 X 7/8 PL RD HD MS	1
78	A0055006	10-24 HEX NUT	1

ASSEMBLY IDENTIFIER

DWG NO 0-2100861-0-09

SHEET 3 CONT ON -

DESCRIPTION (24) PROJECTOR ASSY, IRE SYS

DRAWN S BACON

DATE

CHECKED CB ROGERS

DATE

APP

DATE

APP

DATE

SHEET 3 CONT ON - LAST ECR. 13081.18 CHECKED dvan DATE 2-Sep-05 DWG NO 0-2100861-0-09

REVISIONS

NO	ER	DESCRIPTION	DR	CK	APP	MF
18	12183.1	IT.68 QTY WAS 1. IT.73 QTY WAS "AS REQ'D." IT.74 WAS QTY OF 1.	EP	HW	WG	
S	13081.18	ADDED ITEMS 77 & 78	CJW	JBR	JBR	

MKIV / MKVI IRE LINER

ASSEMBLY DESCRIPTION

ER
DR
CK
APP
MF

Fairmont Tamper™
2401 Edmund Road-Box 20
Cayce-West Columbia,
South Carolina 29171-0020
(803) 822-9160

ENG. DWG NO
2 0-1203294-0

NO	DEN	DESCRIPTION		
1	83/12	NEW RELEASE	H W	

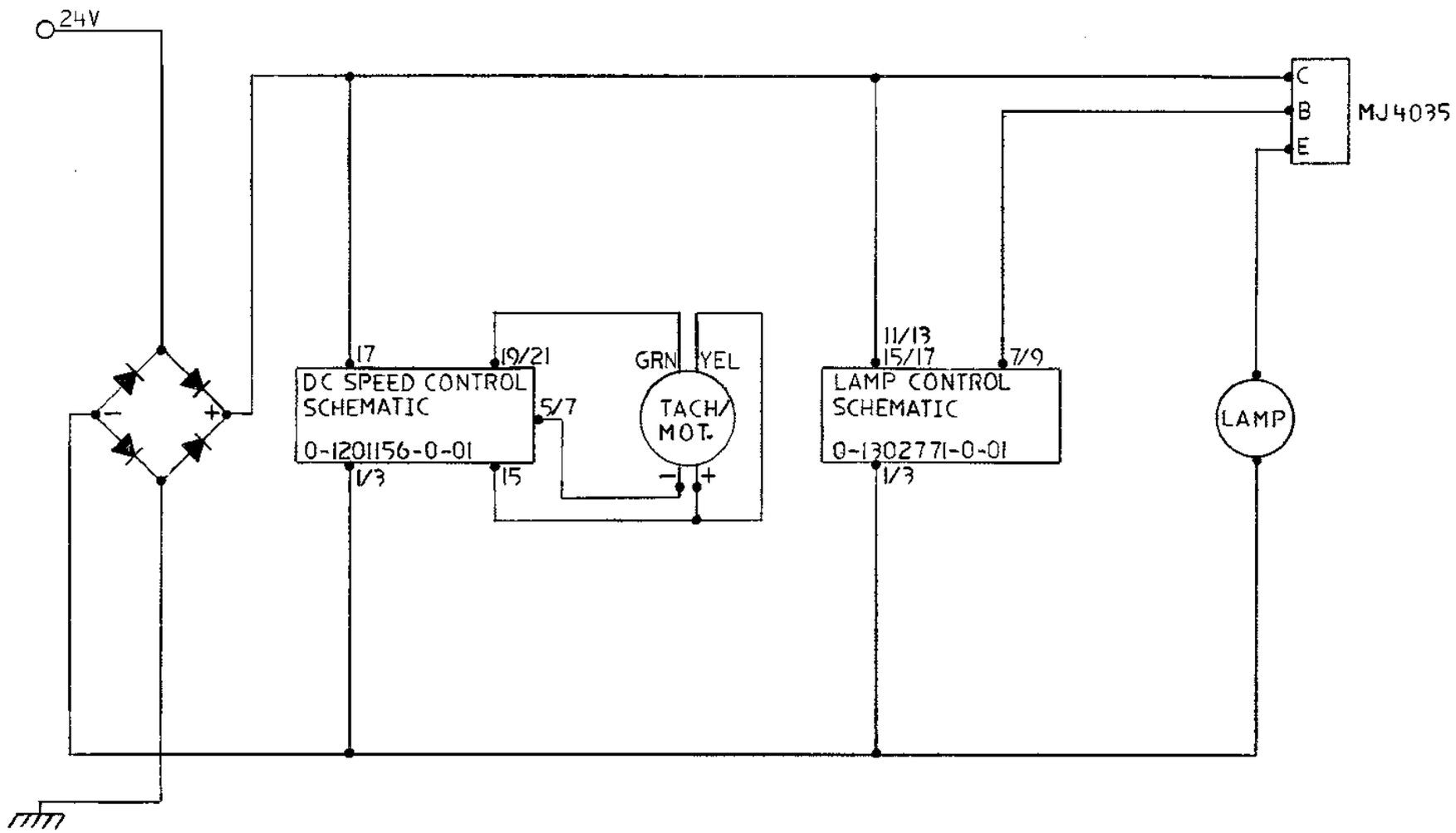

THIS DOCUMENT CONTAINS PROPRIETARY INFORMATION AND SUCH INFORMATION MAY NOT BE DISCLOSED TO OTHERS FOR ANY PURPOSE OR USED FOR MANUFACTURING PURPOSES WITHOUT THE WRITTEN PERMISSION OF TAMPER.

3rd ANGLE PROJECTION

DO NOT SCALE

WEIGHT ____ lbs.

IMPLIED TOLERANCES
ALL DIMENSIONS ARE IN INCHES — TOLERANCE UNLESS OTHERWISE SPECIFIED

NOMINAL SIZE RANGE OVER	TO	PLUS OR MINUS FRACTION	2 PLACE DECIMAL	3 PLACE DECIMAL	NOMINAL SIZE RANGES OVER	TO	PLUS OR MINUS FRACTION	2 PLACE DECIMAL	3 PLACE DECIMAL
—	1	1/64	.01	.003	6	24	3/64	.03	.008
1	6	1/32	.02	.005	24	—	1/16	.05	.010

ANGULAR DIMENSIONS PLUS OR MINUS 1 DEGREE
ALL MACHINED SURFACES TO HAVE A SURFACE FINISH OF 125 MICROINCHES UNLESS OTHERWISE SPECIFIED

DESCRIPTION (30)
PROJECTOR ASS'Y SCHEMATIC

DRAWN WODKE	DATE 4-12-83	MACHINE TYPE JRM/STM 24V
CHECKED	DATE 4/22/83	
APP	DATE APR 16 1983	Tamper Div. Cameron Corp 2401 Edmund Road West Columbia South Carolina 29169 Tel (803) 794-9160 Telex 573435
APP	DATE	
SHEET 1	CONT ON 2	ENG. DWG. NO. 2 0-1203294-0

ITEM NO	PART NO	LEG	DESCRIPTION	QTY
1	0-1203294-0-01			

american blueprint of columbia

ENGS.-10 31436

ENG.DWG.NO.
A3406Y01

REVISIONS							
NO	ER	DESCRIPTION	ZONE	DR	CK	APP	MF
1		NEW RELEASE		JLS			
2	12178.	ADD TO DATABASE. REVISED NOTES 1 & 2. DEL TABLE CHART.		EP	HW	NW	

PROJECTOR SETUP

1) PROJECTOR SPEED CONTROL

MEASURE FROM PIN 5 TO PIN 15 AND ADJUST R1 TO 15VDC.

2) PROJECTOR LAMP VOLT CONTROL ASS'Y

MEASURE FROM PIN 3 TO PIN 18. READING SHOULD BE BETWEEN 16 TO 17VDC

3) FOCUS LAMP

LOOSEN LAMP HOLDER, SLIDE FOWARD OR REVERSE UNTIL LAMP ELEMENT IS CLEARLY REFLECTED ON TEST STAND. TIGHTEN DOWN LAMP ASS'Y.

IMPLIED TOLERANCES
ALL DIMENSIONS ARE IN INCHES-TOLERANCE UNLESS OTHERWISE SPECIFIED

NOMINAL SIZE RANGE		PLUS OR MINUS			NOMINAL SIZE RANGE		PLUS OR MINUS		
OVER	TO	FRACTION	2 PLACE DECIMAL	3 PLACE DECIMAL	OVER	TO	FRACTION	2 PLACE DECIMAL	3 PLACE DECIMAL
-	1	1/64	.01	.003	6	24	3/64	.03	.008
1	6	1/32	.02	.005	24	-	1/16	.05	.010

AUGULAR DIMENSIONS PLUS OR MINUS 1 DEGREE

√ ALL MACHINED SURFACES TO HAVE A SURFACE FINISH OF 125 MICROINCHES UNLESS OTHERWISE SPECIFED.

WEIGHT lbs.

3rd ANGLE PROJECTION

DO NOT SCALE

WELDING SPECIFICATION
UNLESS OTHERWISE SPECIFIED ALL WELDS SHOULD ADHERE TO FAIRMONT TAMPER WELDING SPECIFICATION 101

MATERIAL

DESCRIPTION (24)
PROJECTOR SET-UP

DRAWN	DATE	MACHINE TYPE
SEGROVES	4-23-84	TLPM
CHECKED	DATE	
APP-ENG	DATE	
SHEET 1	CONT. ON —	
LAST ECR. 12178 .1	CHECKED hwj	ENG.DWG.NO. A3406Y01
	DATE 30-Jun-00	

Fairmont Tamper™
2401 Edmund Road-Box 20
Cayce-West Columbia,
South Carolina 29171-0020
(803) 822-9160

ENG.DWG.NO.
A6118X01

REVISIONS							
NO	ER	DESCRIPTION	ZONE	DR	CK	APP	MF
1		NEW RELEASE				RSM	
2		REDRAWN FOR DATA BASE: PWR TRANS(C) WAS GOING TO VLT CNTRL(15); PWR TRANS(E) WAS GOING TO BULB SCKT - NOW GOING TO VLT CNTRL(18)		JZ			

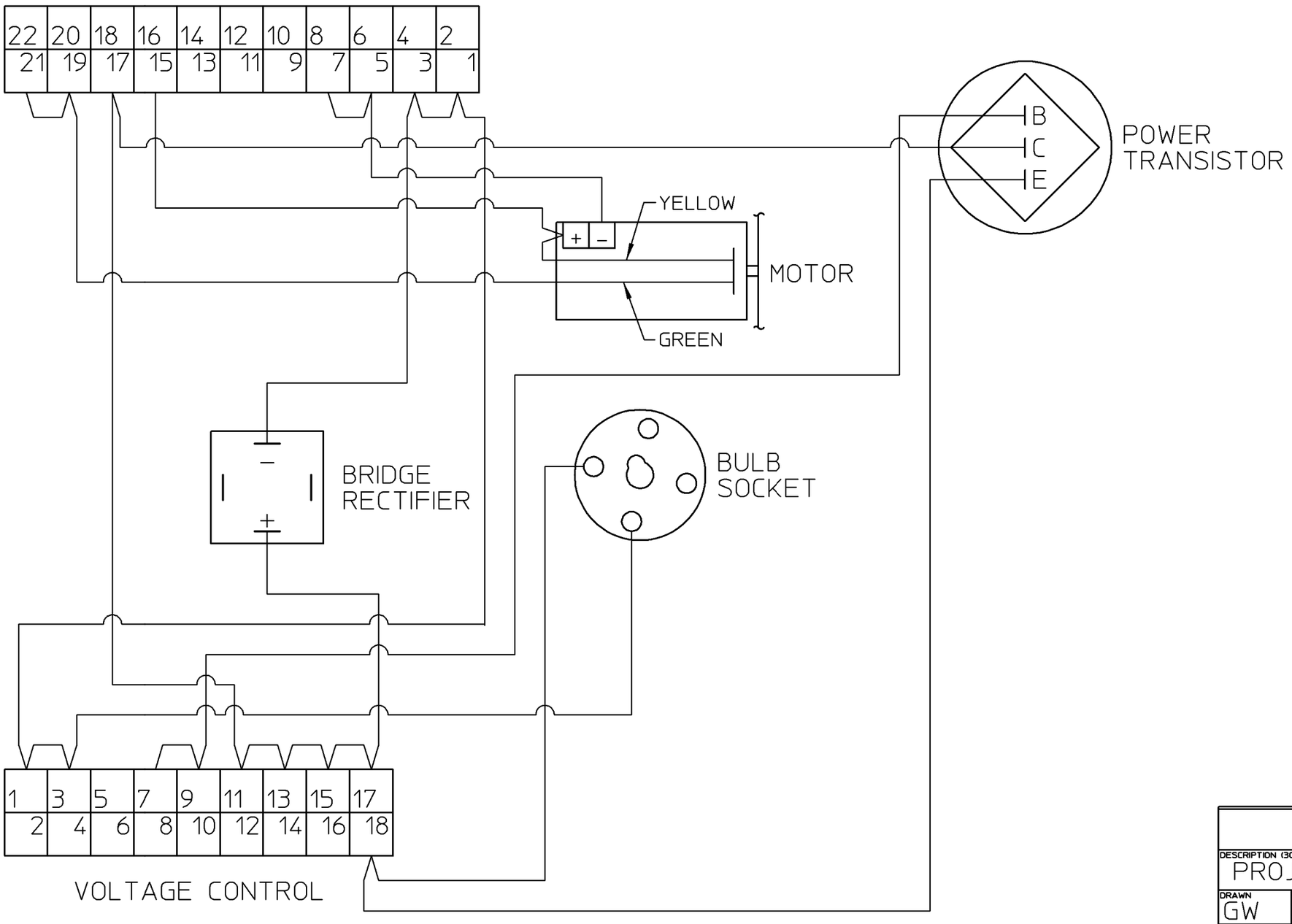

ALL WIRES WILL BE 18# AWG.

THIS DOCUMENT CONTAINS PROPRIETARY INFORMATION AND SUCH INFORMATION MAY NOT BE DISCLOSED TO OTHERS FOR ANY PURPOSE OR USED FOR MANUFACTURING PURPOSES WITHOUT THE WRITTEN PERMISSION OF FAIRMONT TAMPER.

FOR REFERENCE ONLY

DESCRIPTION (30)
PROJECTOR WIRE DIAGRAM

DRAWN GW	DATE 3/25/85	MACHINE TYPE 24V MACHINES
CHECKED	DATE	
APP-ENG RSM	DATE 4/30/85	
SHEET 1	CONT. ON —	
LAST ECR. 6696. 1	CHECKED dvan DATE 2-Mar-94	ENG.DWG.NO. A6118X01

Fairmont Tamper™
2401 Edmund Road-Box 20
Cayce-West Columbia,
South Carolina 29171-0020
(803) 822-9160

ENG.DWG.NO.
0-2100861-0-10

REVISIONS							
NO	ER	DESCRIPTION	ZONE	DR	CK	APP	MF
A	13039 .80	NEW RELEASE		PJG			
B	13081 .18	ADDED ITEMS 77 & 78.		CJW	JBR	JBR	

TOP VIEW WITHOUT COVER

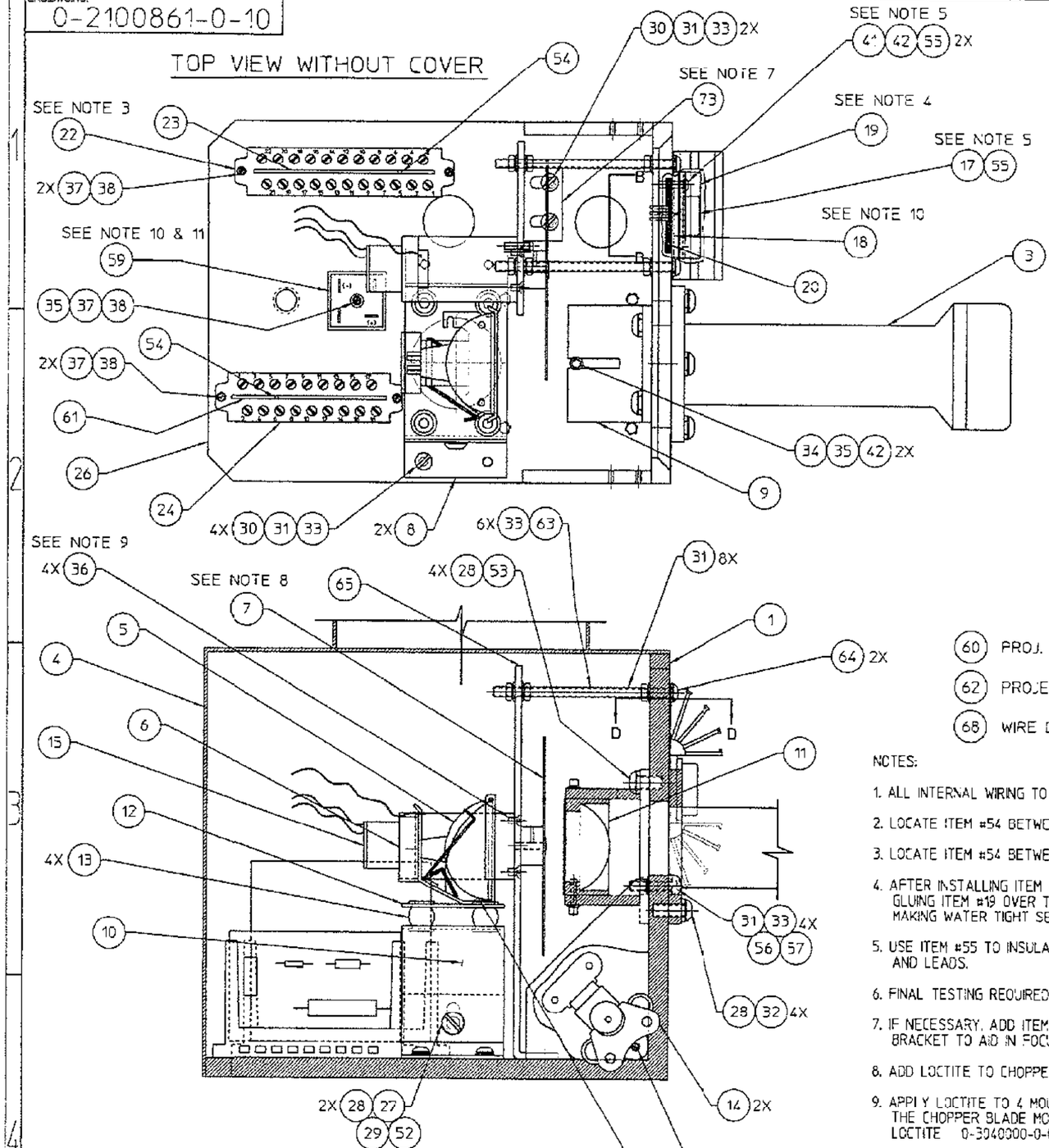

SECTION A - A

60 PROJ. ASS'Y SCHEMATIC

62 PROJECTOR SET-UP

68 WIRE DIAGRAM

NOTES:

1. ALL INTERNAL WIRING TO BE #18 AWG.
2. LOCATE ITEM #54 BETWEEN TERMINALS #5 & #6.
3. LOCATE ITEM #54 BETWEEN TERMINALS #4 & #5.
4. AFTER INSTALLING ITEM #17 USE SILICONE FOR GLUING ITEM #19 OVER THE FACE OF ITEM #17 MAKING WATER TIGHT SEAL.
5. USE ITEM #55 TO INSULATE TRANSISTOR SCREWS AND LEADS.
6. FINAL TESTING REQUIRED.
7. IF NECESSARY, ADD ITEM #73 (SHIM) TO MOTOR BRACKET TO AID IN FOCUSING.
8. ADD LOCTITE TO CHOPPER BLADE SET SCREWS.
9. APPLY LOCTITE TO 4 MOUNTING SCREWS FOR THE CHOPPER BLADE MOTOR. LOCTITE 0-3040000-0-06
10. USE THERMAL JOINT COMPOUND (L422653) ON BOTH SIDES OF INSULATOR, AND ON BOTTOM SIDE OF RECTIFIER.
11. WHEN INSTALLING RECTIFIER, INSTALL AS SHOWN OBSERVING POLARITY (-), (+).

TOP

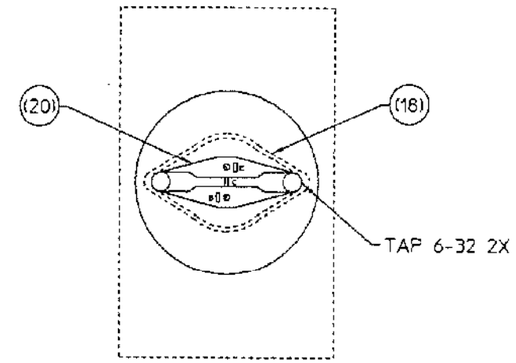

VIEW "B - B"
ENLARGED FOR MOUNTING

SECTION N-8A

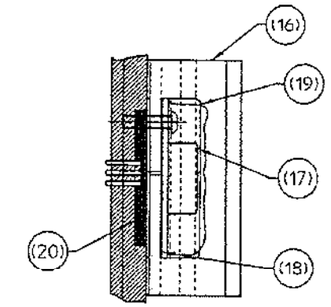

VIEW "D - D"
ENLARGED FOR MOUNTING

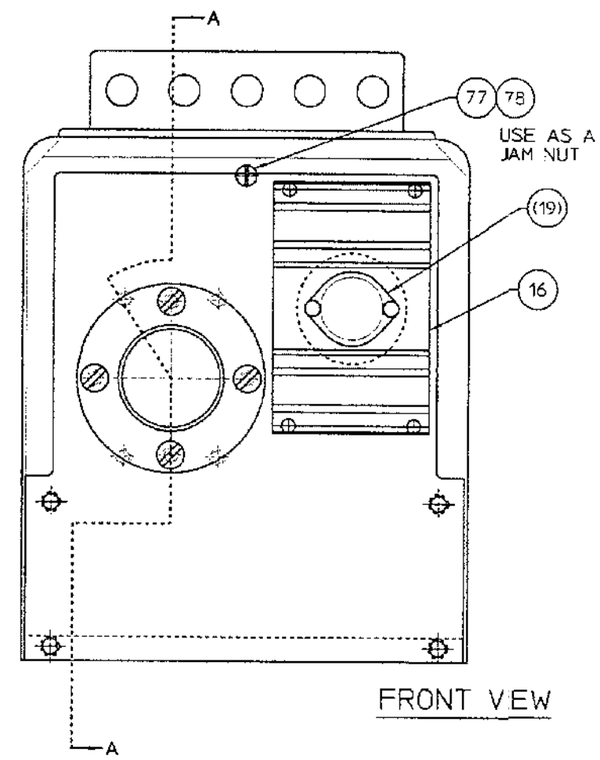

FRONT VEW

PLOT @ -1.25

IMPLIED TOLERANCES ALL DIMENSIONS ARE IN INCHES-TOLERANCE UNLESS OTHERWISE SPECIFIED								
NOMINAL SIZE RANGE		PLUS OR MINUS			NOMINAL SIZE RANGE		PLUS OR MINUS		
OVER	TO	FRACTION	2 PLACE DECIMAL	3 PLACE DECIMAL	OVER	TO	FRACTION	2 PLACE DECIMAL	3 PLACE DECIMAL
-	1	1/64	.01	.003	6	24	3/64	.03	.005
1	6	1/32	.02	.005	24	-	1/16	.05	.010
ANGULAR DIMENSIONS PLUS OR MINUS 1 DEGREE									
√ ALL MACHINED SURFACES TO HAVE A SURFACE FINISH OF 125 MICROINCHES UNLESS OTHERWISE SPECIFIED.									

WELDING SPECIFICATION

UNLESS OTHERWISE SPECIFIED ALL WELDS SHOULD ADHERE TO FAIRMONT TAMPER WELDING SPECIFICATION NO. 101

WEIGHT LBS

3rd ANGLE PROJECTION

DO NOT SCALE

SHEET 1 CONT. — ON —

FIG NO.	ITEM NO.	PART NUMBER	DESCRIPTION AND MATERIAL SIZE (REF.ONLY)	QTY

DESCRIPTION (2)
SURFACE PROJECTOR ASSY

DRAWN PJG	DATE 05-03-04	MACHINE TYPE IRE/SURFACE	
CHECKED JDC	DATE 05-25-04	Fairmont Tamper 2401 Edmund Road-Box 20 Cayce-West Columbia South Carolina 29171-0020 (803) 822-1980	
APPROVED JDC	DATE 05-25-04		
APPROVED	DATE		
LAST ECN. 13081 .18	CHECKED GVGN	ENG.DWG.NO. 0-2100861-0-10	
	DATE 2-Sep-05		

THIS DOCUMENT CONTAINS PROPRIETARY INFORMATION AND SUCH INFORMATION MAY NOT BE DISCLOSED TO OTHERS FOR ANY PURPOSE OR USED FOR MANUFACTURING PURPOSES WITHOUT THE WRITTEN PERMISSION OF FAIRMONT TAMPER.

PARTS LIST

ASSEMBLY IDENTIFIER

ITEM NO	PART NUMBER	DESCRIPTION	QUANTITY
1	0-1100860-0-01	PROJ HOUSING DRILLING	1
2	BLANK		
3	Y684614	INFRARED FILTER ASSEMBLY	1
4	X752836A	COVER ASSY	1
5	B9263Y01	PROJECTOR BULB	1
6	C8106Y01	SOCKET RWK, D.C.	1
7	Z754020A	CHOPPER DISK ASSY	1
8	Z684284	LAMP BRKT	2
9	Y683992	LENS HOLDER BRKT	1
10	C1182X01	BRACKET	1
11	Z684112	PROJ LENS HOLDER ASSY	1
12	C1192Y01	ALUMINUM	1
13	L411271	SHOCK ABSORBER	4
14	L41620	SPRING FASTENER	2
15	0-3187013-0-01	PROJECTOR MOTOR	1
16	0-1404878-0-01	HEAT SINK REWORK	1
17	L424961	DARLINGTON POWER TRANSIS	1
18	0-3204003-0-01	INS, POWER SEMICONDUCTOR	1
19	0-3204002-0-01	TO-3 CASE INSULTNG COVER	1
20	L422417	TRANSISTOR SOCKET	1
21	BLANK		
22	0-3237004-0-01	PCB CONN CARD GUIDE	1
23	0-2302202-0-01	CONTROL BOARD	1
24	0-3237004-0-02	PCB CONN CARD GUIDE	1
25	BLANK		
26	A9297Y02	COPPER WIRE, 18AWG	8
27	A0036001	1/4-20 X 1/2 HHCS	2
28	A0061008	1/4 MEDIUM LOCK WASHER	6
29	A0055009	1/4-20 HEX NUT	2
30	A0050053	10-24 X 3/8 PL RD HD MS	6
31	A0059025	10 MEDIUM PLTD FL WASH	18
32	A0050077	1/4-20 X 5/8 RD HD MS	4
33	A0061006	10 PLATED LOCK WASHER	16

REVISIONS

NO	ER	DESCRIPTION	DR	CK	APP	MF
A	13039 .80	NEW RELEASE	PJG			
B		NO CHANGE				

ASSEMBLY DESCRIPTION

ER
DR
CK
APP
MF

Fairmont Tamper™
2401 Edmund Road-Box 20
Cayce-West Columbia,
South Carolina 29171-0020
(803) 822-9160

DWG NO 0-2100861-0-10
SHEET 1
CONT ON 2
DESCRIPTION (24) SURFACE PROJECTOR ASSY
DRAWN PJG
DATE 05-03-04
CHECKED JOC
DATE 05-25-04
APP JOC
DATE 05-25-04
APP
DATE

SHEET 1
CONT ON 2
LAST ECR 13081 .18
CHECKED dvan
DATE 2-Sep-05
DWG NO 0-2100861-0-10

PARTS LIST

ASSEMBLY IDENTIFIER

ITEM NO	PART NUMBER	DESCRIPTION	QUANTITY
34	A0041004	6-32 X 1/2 SOC HD CS GR8	2
35	A0059024	6 MEDIUM PLATED FL WASH	3
36	A0052006	6-32 X 1/4 PL FL HD MS	4
37	A0050102	5-40 X 1/2 PL RD HD MS	5
38	A0061003	5 PLATED LOCK WASHER	5
39	BLANK		
40	BLANK		
41	A0050025	6-32 X 1/2 PL RD HD MS	2
42	A0061004	6 PLATED LOCK WASHER	4
43	BLANK		
44	A0071125	4-40 X 1/4 PL HHCS	4
45	A0061002	4 PLATED LOCK WASHER	6
46	BLANK		
47	BLANK		
48	BLANK		
49	BLANK		
50	BLANK		
51	BLANK		
52	A0059001	1/4 MEDIUM FLAT WASHER	2
53	A0050076	1/4-20 X 1/2 RD HD MS	4
54	L422468	POLARIZING KEY	2
55	L422146	SHRINK TUBING,1/8"	1
56	A0071136	10-24 X 3/4 PL HHCS	4
57	A0055006	10-24 PLATED HEX NUT	4
58	BLANK		
59	0-3152004-0-06	BRIDGE RECTIFIER	1
61	0-2306408-0-01	CONTROL BOARD	1
63	A0055039	10-24 PLATED HEX NUT	6
64	A0050094	10-24 X 3-1/2 PL RD HDMS	2
65	A4553X01	BRACKET,MOTOR	1
66	BLANK		

REVISIONS

NO	ER	DESCRIPTION	DR	CK	APP	MF
A	13039 .80	NEW RELEASE	PJG			
B		NO CHANGE				

IRE/SURFACE

ASSEMBLY DESCRIPTION

ER
DR
CK
APP
MF

Fairmont Tamper™
2401 Edmund Road-Box 20
Cayce-West Columbia,
South Carolina 29171-0020
(803) 822-9160

DWG NO 0-2100861-0-10
SHEET 2
CONT ON 3
DESCRIPTION (24) SURFACE PROJECTOR ASSY
DRAWN PJG
DATE 05-03-04
CHECKED JOC
DATE 05-25-04
APP JOC
DATE 05-25-04
APP
DATE

SHEET 2
CONT ON 3
LAST ECR 13081 .18
CHECKED dvan
DATE 2-Sep-05
DWG NO 0-2100861-0-10

PARTS LIST

ITEM NO	PART NUMBER	DESCRIPTION	QUANTITY
67	BLANK		
69	BLANK		
70	BLANK		
71	A0050008	4-40 X 1/4 PL RD HD MS	2
72	A0055002	4-40 PLATED HEX NUT	2
73	N/A	BRASS SHIM STOCK	REF
74	BLANK		
75	BLANK		
76	BLANK		
77	A0050057	10-24 X 7/8 PL RD HD MS	1
78	A0055006	10-24 HEX NUT	1

ASSEMBLY IDENTIFIER

IRE/SURFACE

ASSEMBLY DESCRIPTION

ER
DR
CK
APP
MF

REVISIONS

NO	ER	DESCRIPTION	DR	CK	APP	MF
A	13039 .80	NEW RELEASE	PJG			
B	13081 .18	ADDED ITEMS 77 & 78	CJW	JBR	JBR	

DWG NO 0-2100861-0-10
SHEET 3
CONT ON -
DESCRIPTION (24) SURFACE PROJECTOR ASSY
DRAWN PJG
DATE 05-03-04
CHECKED JOC
DATE 05-25-04
APP JOC
DATE 05-25-04
APP
DATE

SHEET 3
CONT ON -
LAST ECR 13081 .18
CHECKED dvan
DATE 2-Sep-05
DWG NO 0-2100861-0-10

Fairmont Tamper™
2401 Edmund Road-Box 20
Cayce-West Columbia,
South Carolina 29171-0020
(803) 822-9160

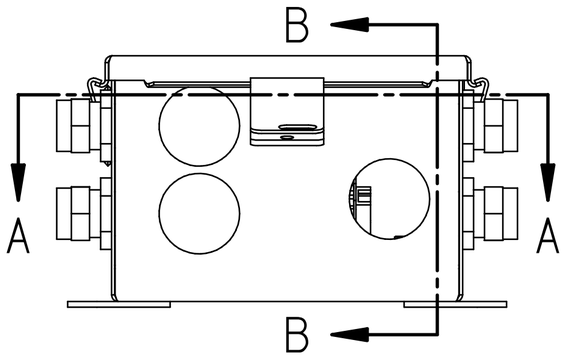

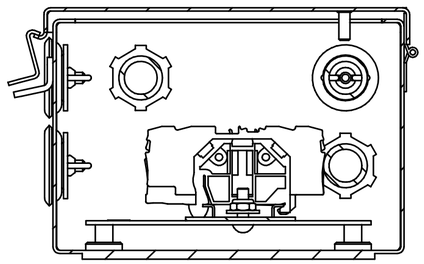

SECTION B-B

Item Number	Document Number	Title	Quantity
10	5008288	ENCLOSURE DRILLING	1
20	405596	MOUNTING RAIL	1
30	F018029K	#10-24 ELASTIC STOP NUT	2
40	F001050	DC-WROUGHT WASHER #10(.190)	2
50	F009594	RD HD MS #10-24 X .625	2
60	F041270	END STOP	2
70	4011819	TERM BLOCK, 4 COND, 20-10AWG	10
80	4011820	END PLATE, TB 4 COND, 20-10AWG	1
90	F040134	DC-DECAL	1
100	4016767	TERNINAL MARKER CARD, WAGO	AS REQ'D
110	L40818	WATER TIGHT CONNECTOR	5
120	F020177	HOLE SEAL	3
130*	A1278Y19	STRAIN RELIEF, 1 IN, 90 DEG	1

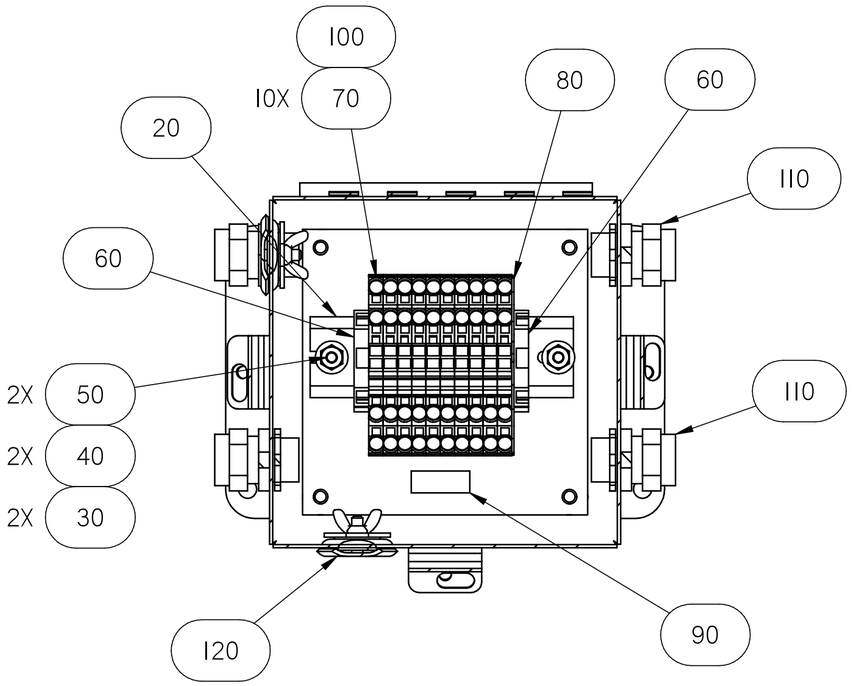

SECTION A-A

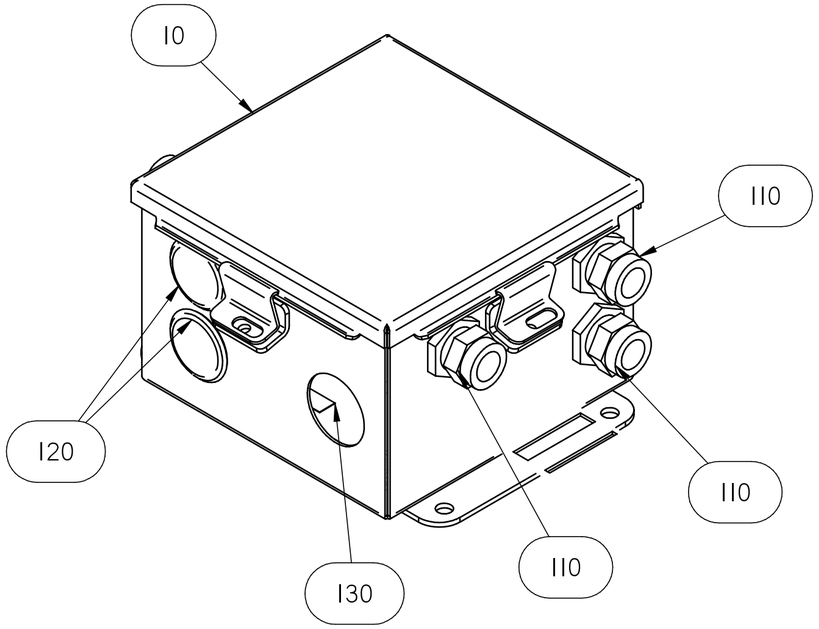

Inch
[mm]

CONFIDENTIAL

© COPYRIGHT 2011 HARSCO. THIS DRAWING OR DOCUMENT IS THE PROPERTY OF HARSCO AND EMBODIES CONFIDENTIAL INFORMATION, TRADE SECRET INFORMATION, AND/OR KNOW-HOW THAT IS THE PROPERTY OF HARSCO. BY ACCEPTING THIS DRAWING OR DOCUMENT, THE RECIPIENT AGREES (1) NOT TO PROVIDE, OR OTHERWISE MAKE AVAILABLE, THE DRAWING OR DOCUMENT, OR ANY INFORMATION OR KNOW-HOW EMBODIED THEREIN, TO ANY THIRD PARTY AND (2) NOT TO REPRODUCE OR USE THE DRAWING OR DOCUMENT TO MANUFACTURE ANY APPARATUS OR DEVICE, WITHOUT THE PRIOR WRITTEN AUTHORIZATION OF HARSCO.

NOMINAL SIZE RANGE		INCH PLUS OR MINUS		NOMINAL SIZE RANGE		METRIC PLUS OR MINUS	
OVER	TO	2 PLACE DECIMAL	3 PLACE DECIMAL	OVER	TO	1 PLACE DECIMAL	2 PLACE DECIMAL
0	6	.03	.005	0	150	.8	.13
6	24	.04	.008	150	600	1.0	.20
24	-	.06	.010	600	-	1.5	.25

UNLESS OTHERWISE SPECIFIED ALL MACHINED SURFACES WILL HAVE;
A SURFACE FINISH OF 125 MICROINCHES
ANGULAR TOLERANCE OF ± .50°
CONCENTRICITY WITHIN .010

THIRD ANGLE PROJECTION

UNLESS OTHERWISE SPECIFIED, ALL WELDS SHOULD ADHERE TO THE MOST CURRENT A.W.S WELDING STANDARDS

CHANGE	R/L	REVISION	DR	DATE
EC501495	A	RELEASE	HW	06-07-11

Description: DISTRIBUTION J-BOX ASSEMBLY

HARSCO RAIL

Material: ----------
Machine Type: MARK IV HD
Size: C
Weight: 5.1 lbm
Drawn: hwiggins
Date Drawn: 7/7/2011
Part Number: 5009441
Sheet: 1 of 1

SOLID EDGE DRAWING — DO NOT SCALE

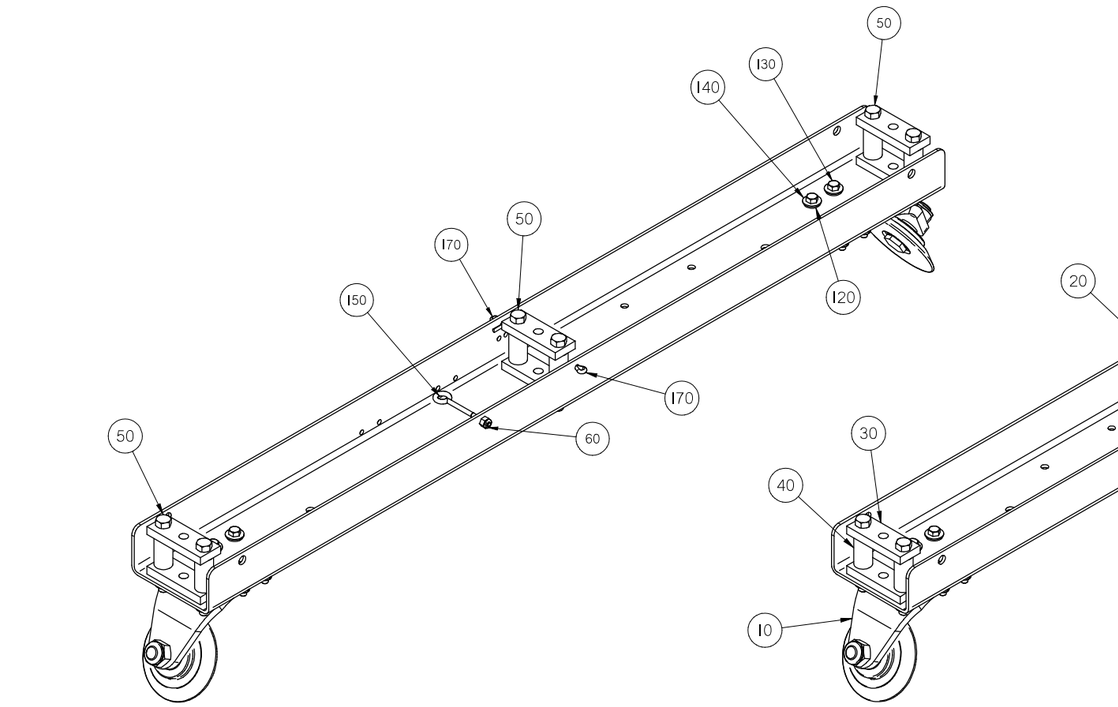

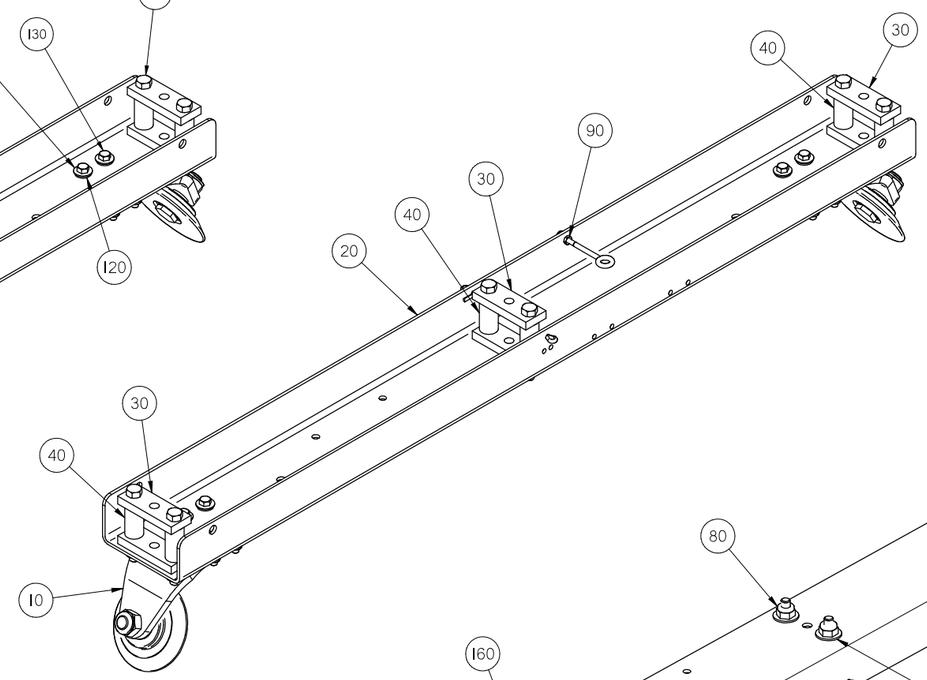

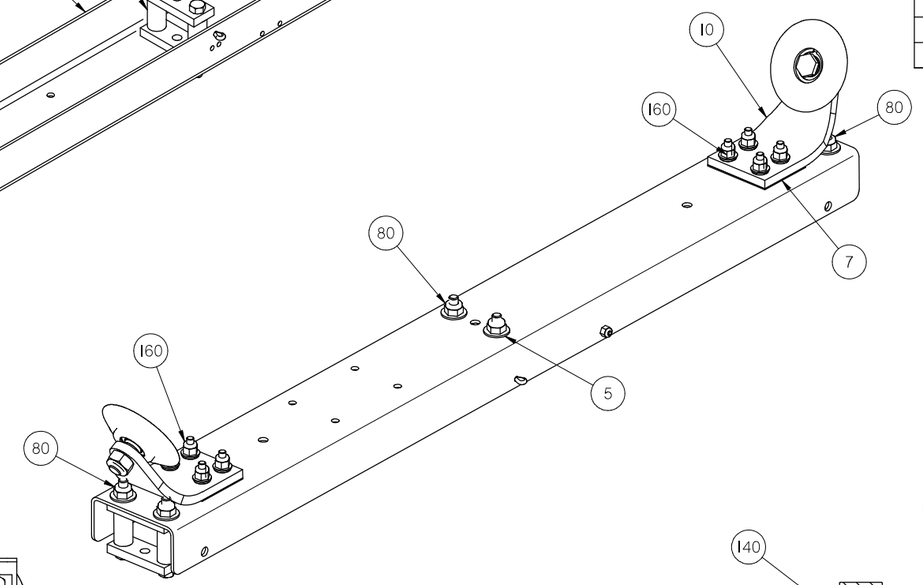

ITEM	PART NO	QTY	DESCRIPTION
10	0-230207-0-04	2	BIAS WHEEL ASSEMBLY (60 DEG)
20	4000551	1	CHANNEL
30	0-1405308-0-01	6	GUIDE BAR
40	0-1405307-0-01	6	GUIDE TUBE
50	A0036144	6	1/2-13X4 1/4 H/H CAPSCR
60	L40237	1	ELASTIC STOPNUT #29-NU040 USE
70	A0059005	6	1/2 PL WSHR USE F001267
80	L41523	6	NUT
90	A0056001	1	1/4-20 HEX JAM NUTS
100	Z750036	2	INSULATING PLATE
110	Z685611	8	INSULATING TUBE
120	Z750057	24	INSULATING WASHER
130	A0036068	8	3/8-16 X 2 HHCS USE F001640
140	A0059003	16	3/8 REG PL WSHR
150	A0066001	1	1/4-20 X 1 EYE BOLT
160	L40387	8	NUT ELASTIC STOP
170	A0068028	2	1/4 X 1 COTTER PIN

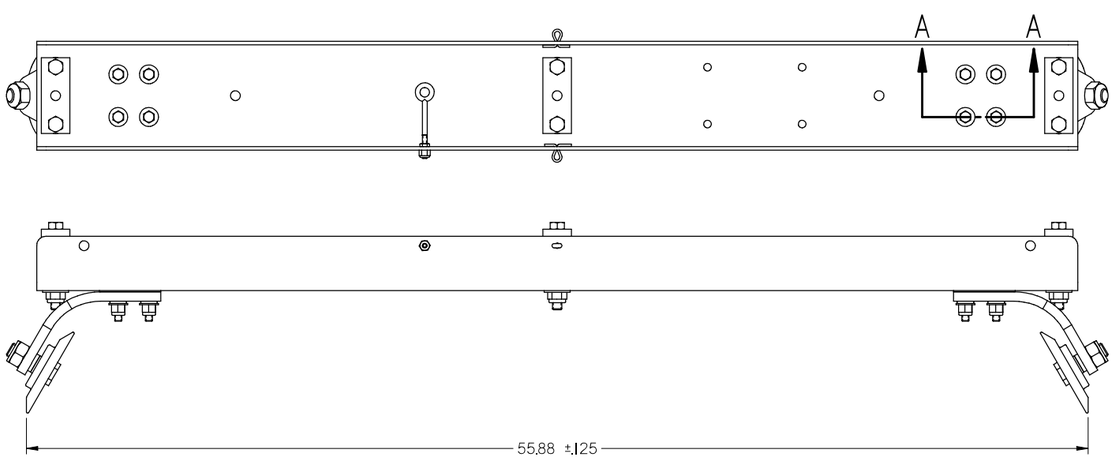

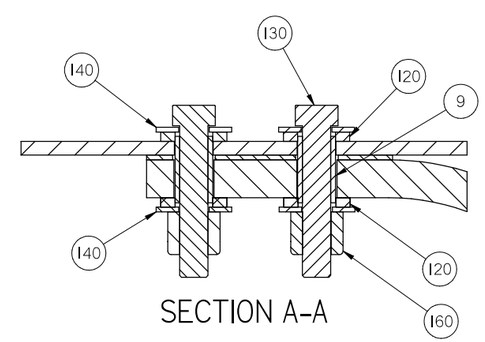

Inch
[mm]

SOLID EDGE DRAWING

CONFIDENTIAL

© COPYRIGHT 2009 HARSCO. THIS DRAWING OR DOCUMENT IS THE PROPERTY OF HARSCO AND EMBODIES CONFIDENTIAL INFORMATION, TRADE SECRET INFORMATION, AND/OR KNOW-HOW THAT IS THE PROPERTY OF HARSCO. BY ACCEPTING THIS DRAWING OR DOCUMENT, THE RECIPIENT AGREES (1) NOT TO PROVIDE, OR OTHERWISE MAKE AVAILABLE, THE DRAWING OR DOCUMENT, OR ANY INFORMATION OR KNOW-HOW EMBODIED THEREIN, TO ANY THIRD PARTY AND (2) NOT TO REPRODUCE OR USE THE DRAWING OR DOCUMENT TO MANUFACTURE ANY APPARATUS OR DEVICE, WITHOUT THE PRIOR WRITTEN AUTHORIZATION OF HARSCO.

IMPLIED TOLERANCES

ALL DIMENSIONS ARE IN INCHES - TOLERANCE UNLESS OTHERWISE SPECIFIED

NOMINAL SIZE RANGE		INCH PLUS OR MINUS		NOMINAL SIZE RANGE		METRIC PLUS OR MINUS	
OVER	TO	3 PLACE DECIMAL	5 PLACE DECIMAL	OVER	TO	1 PLACE DECIMAL	2 PLACE DECIMAL
0	6	.03	.005	0	150	.5	.13
6	24	.04	.008	150	600	1.0	.20
24	-	.06	.010	600	-	1.5	.25

UNLESS OTHERWISE SPECIFIED ALL MACHINED SURFACES WILL HAVE:
A SURFACE FINISH OF 125 MICRONCHES
ANGULAR TOLERANCE OF ±.50°
CONCENTRICITY WITHIN .010

THIRD ANGLE PROJECTION

UNLESS OTHERWISE SPECIFIED, ALL WELDS SHOULD ADHERE TO THE MOST CURRENT A.W.S WELDING STANDARDS

CHANGE	R/L	REVISION	DATE
ECN-106406	L	SE DRAFT VERSION CREATED	09-20-10
ECN-106570	M	BOM UPDATED	11-01-10

Description: PROJECTOR SUPPORT CHANNEL ASSY

Drawing Number: ----------

Machine Type: MARK IV

Model: 0-2100917-0-15.asm

Drawn: bpayyadakkath — Date Drawn: 20 Sept 10

Weight: 50.7 lbm — Scale: 1:4 — APVD Dwg: BPA — APVD Ctlng: HW

Mat'l: - -

HARSCO RAIL

Part Number: 0-2100917-0-15 — Size: D — Sheet: 1 of 1

Plotted by bpayyadakkath on 3/17/2011 0-2100917-0-15.dft

CONFIDENTIAL
© COPYRIGHT 2009 HARSCO. THIS DRAWING OR DOCUMENT IS THE PROPERTY OF HARSCO AND EMBODIES CONFIDENTIAL INFORMATION, TRADE SECRET INFORMATION, AND/OR KNOW-HOW THAT IS THE PROPERTY OF HARSCO. BY ACCEPTING THIS DRAWING OR DOCUMENT, THE RECIPIENT AGREES (1) NOT TO PROVIDE, OR OTHERWISE MAKE AVAILABLE, THE DRAWING OR DOCUMENT, OR ANY INFORMATION OR KNOW-HOW EMBODIED THEREIN, TO ANY THIRD PARTY AND (2) NOT TO REPRODUCE OR USE THE DRAWING OR DOCUMENT TO MANUFACTURE ANY APPARATUS OR DEVICE, WITHOUT THE PRIOR WRITTEN AUTHORIZATION OF HARSCO.

SOLID EDGE DRAWING

Item Number	Document Number	Title	Quantity
1	C1612X01	BIAS WHEEL BRACKET (60°)	1
2	Z685275	SPACER	3
3	C1695X01	BIAS WHEEL (60°)	1
4	Z685273	WHEEL AXLE	1
5	L41764	LOCKNUT, 3/4-10, PLATED	1
6	L40153	BALL BEARING	1
7	L410291	RETAINING RING	1

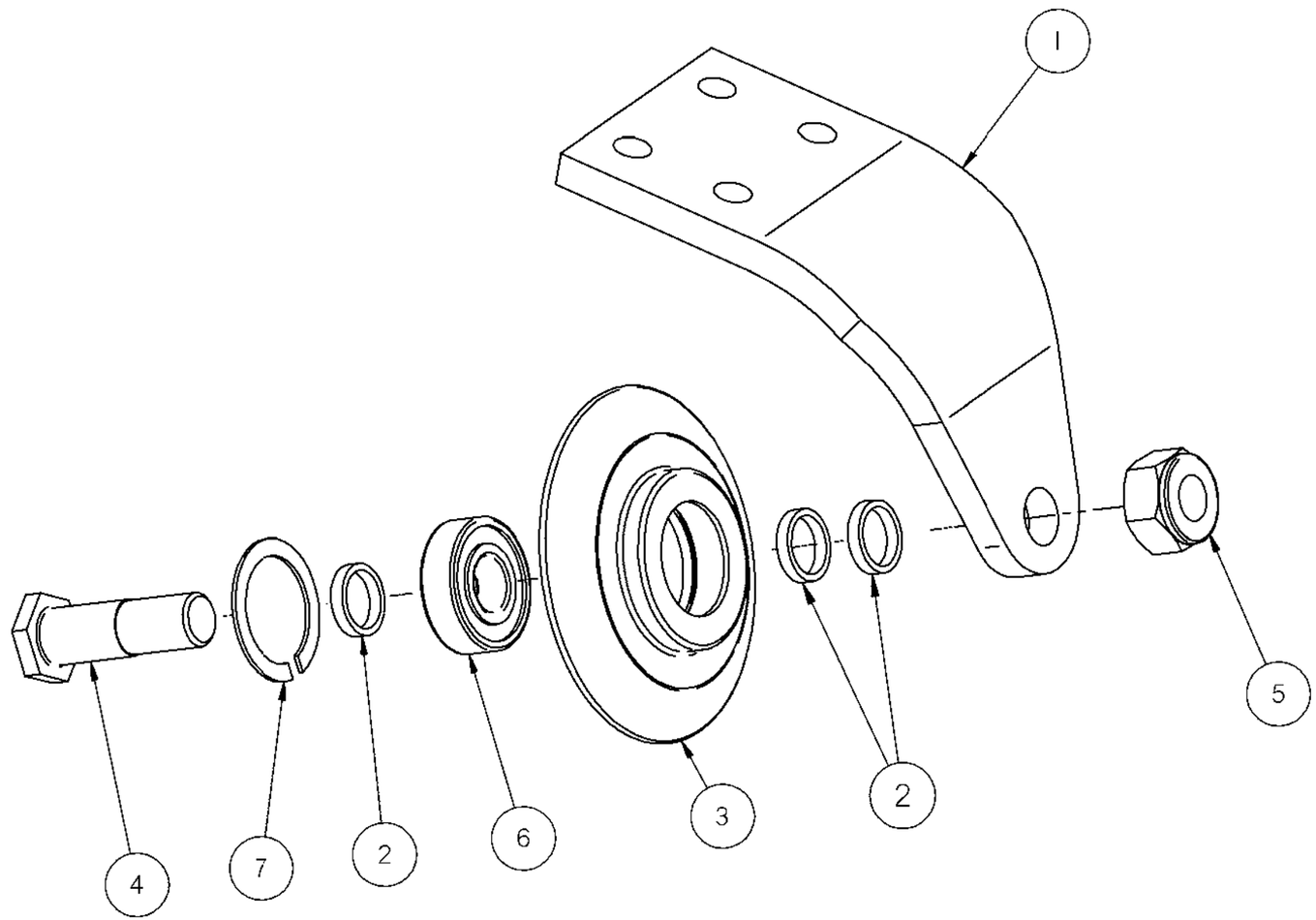

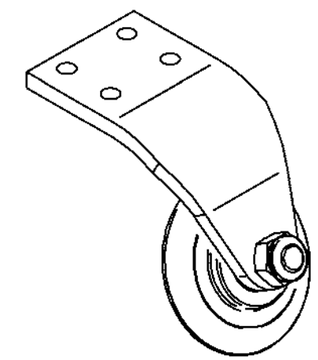

Inch
[mm]

IMPLIED TOLERANCES
ALL DIMENSIONS ARE IN INCHES - TOLERANCE UNLESS OTHERWISE SPECIFIED

NOMINAL SIZE RANGE		INCH PLUS OR MINUS		NOMINAL SIZE RANGE		METRIC PLUS OR MINUS	
OVER	TO	2 PLACE DECIMAL	3 PLACE DECIMAL	OVER	TO	1 PLACE DECIMAL	2 PLACE DECIMAL
0	6	.03	.005	0	150	.8	.13
6	24	.04	.008	150	600	1.0	.20
24	-	.06	.010	600	-	1.5	.25

UNLESS OTHERWISE SPECIFIED, ALL MACHINED SURFACES WILL HAVE:
A SURFACE FINISH OF 125 MICROINCHES
ANGULAR TOLERANCE OF ± .50°
CONCENTRICITY WITHIN .010

THIRD ANGLE PROJECTION

UNLESS OTHERWISE SPECIFIED, ALL WELDS SHOULD ADHERE TO THE MOST CURRENT A.W.S WELDING STANDARDS

CHANGE	R/L	REVISION	DATE
ECN-106406	C	SE DRAFT VERSION CREATED	09-20-10

Description: BIAS WHEEL ASSEMBLY (60°)

Drawing Number: ----------
Machine Type: MARK IV
Model: 0-2302071-0-04.asm
Drawn: bpayyadakkath
Date Drawn: 20 Sept 10
Weight: 7.2 lbm
Scale: 1:2
APVD Desg: BPA
APVD ChEng: HW
Mat'l:

HARSCO RAIL

Part Number: 0-2302071-0-04
Size: B
Sheet: 1 of 1

Plotted by bpayyadakkath on 9/20/2010 0-2302071-0-04.dft

Item Number	Document Number	Title	Quantity
1	A6825XAA	PUSHER BAR (TUBE 101 3/8" LG)	1
2	A6823XAA	PUSHER BAR (TUBE 99" LG)	1
3	0-2201452-0-01	WHEEL ASSEMBLY, INSULATED	2
4	A0036070	3/8-16 2 1/2 HHCS	4
5	L40387	LOCKNUT, 3/8-16, HEAVY	4
6	B5391T82	TWO HOLE PIN	1
7	A0059007	5/8 FLAT WASHER	2
8	L40115	ROLL PIN, 3/16 DIA X 1 1/4 LG	2
9	0-3201001-0-16	GROMMET, 7/8 I.D.	4
10	L41938	GROMMET, 5/8 I.D.	4
11	0-3015004-0-17	HITCH PIN, 1/2 DIA	1

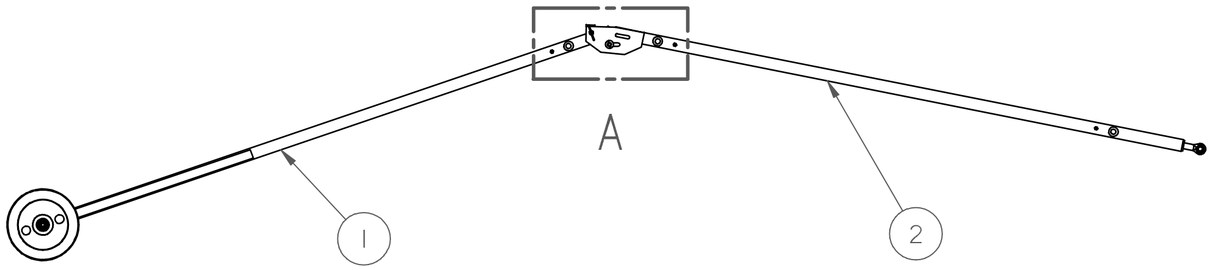

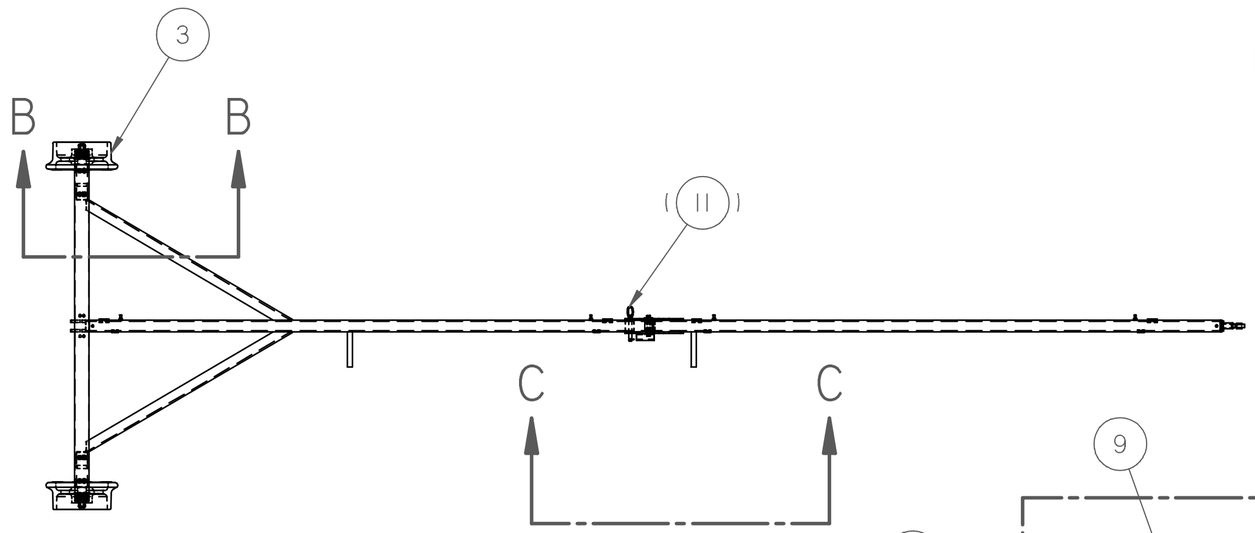

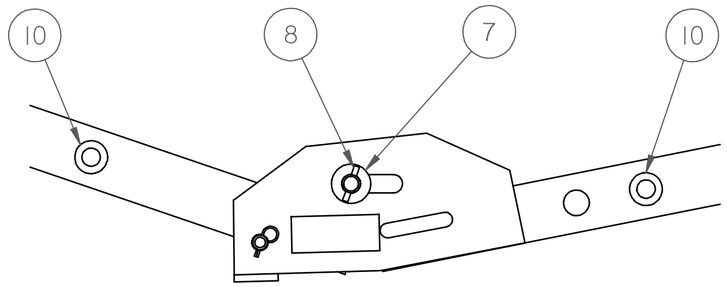

VIEW C-C

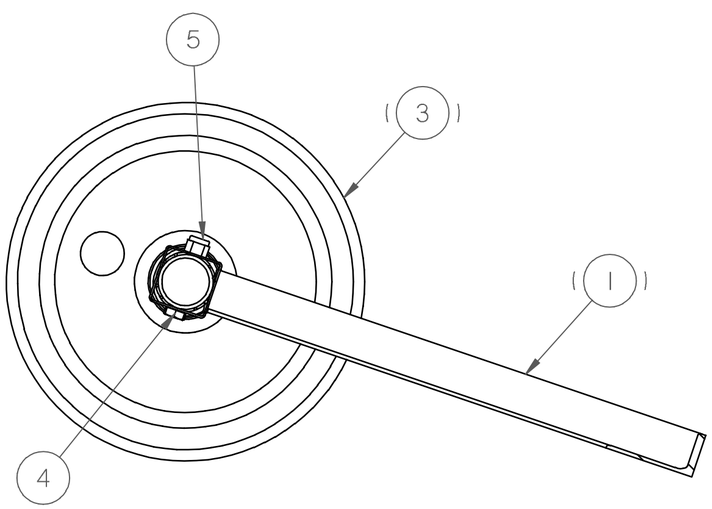

SECTION B-B

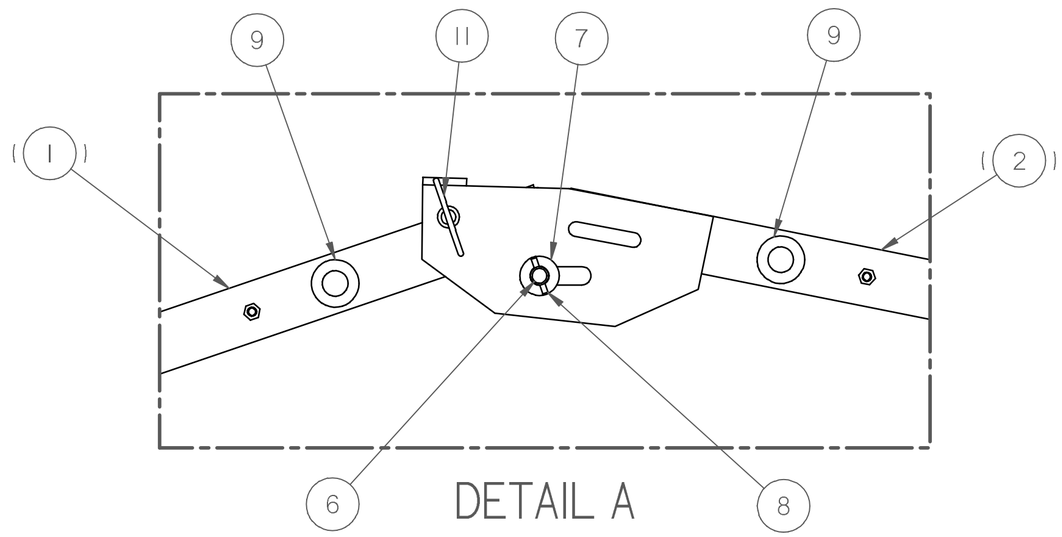

DETAIL A

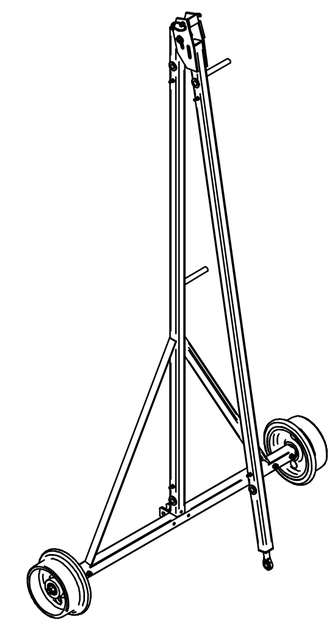

NOTE:

UNFOLD PUSHER BARS OUT TO THEIR MAXIMUM AND USE HOLE INSIDE PLATE AS TEMPLATE TO LOCATE AND DRILL A DIA .56 HOLE FOR LOCKING PIN (IT.11)

Inch [mm]

SOLID EDGE DRAWING

CONFIDENTIAL

© COPYRIGHT 2009 HARSCO. THIS DRAWING OR DOCUMENT IS THE PROPERTY OF HARSCO AND EMBODIES CONFIDENTIAL INFORMATION, TRADE SECRET INFORMATION, AND/OR KNOW-HOW THAT IS THE PROPERTY OF HARSCO. BY ACCEPTING THIS DRAWING OR DOCUMENT, THE RECIPIENT AGREES (1) NOT TO PROVIDE, OR OTHERWISE MAKE AVAILABLE, THE DRAWING OR DOCUMENT, OR ANY INFORMATION OR KNOW-HOW EMBODIED THEREIN, TO ANY THIRD PARTY AND (2) NOT TO REPRODUCE OR USE THE DRAWING OR DOCUMENT TO MANUFACTURE ANY APPARATUS OR DEVICE, WITHOUT THE PRIOR WRITTEN AUTHORIZATION OF HARSCO.

IMPLIED TOLERANCES

ALL DIMENSIONS ARE IN INCHES - TOLERANCE UNLESS OTHERWISE SPECIFIED

NOMINAL SIZE RANGE		INCH PLUS OR MINUS		NOMINAL SIZE RANGE		METRIC PLUS OR MINUS	
OVER	TO	2 PLACE DECIMAL	3 PLACE DECIMAL	OVER	TO	1 PLACE DECIMAL	2 PLACE DECIMAL
0	6	.03	.005	0	150	.8	.13
6	24	.04	.008	150	600	1.0	.20
24	-	.06	.010	600	-	1.5	.25

UNLESS OTHERWISE SPECIFIED ALL MACHINED SURFACES WILL HAVE;
A SURFACE FINISH OF 125 MICROINCHES
ANGULAR TOLERANCE OF ±.50°
CONCENTRICITY WITHIN .010

THIRD ANGLE PROJECTION

UNLESS OTHERWISE SPECIFIED, ALL WELDS SHOULD ADHERE TO THE MOST CURRENT A.W.S WELDING STANDARDS

CHANGE	R/L	REVISION	DATE
ECN-106474	K	SE DRAFT VERSION CREATED	10-05-10

Description: PUSHER BUGGY

Drawing Number: ----------

Machine Type: MARK IV

Model: A6762WAA.asm!Member2

Drawn: bpayyadakkath

Date Drawn: 05 Oct 10

Weight: 140.7 lbm

Scale: 1:20

APVD Desg: BPA

APVD ChEng: HW

Mat'l

HARSCO RAIL

Part Number: A6762WAA

Size: C

Sheet: 1 of 1

Plotted by bpayyadakkath on 2/24/2011 A6762WAA.dft

Item Number	Document Number	Title	Quantity
1	A6825XAA	PUSHER BAR (TUBE 101 3/8" LG)	1
2	A6823XAB	PUSHER BAR (TUBE 99" LG)	1
3	0-2201452-0-01	WHEEL ASSEMBLY, INSULATED	2
4	A0036070	3/8-16 2 1/2 HHCS	4
5	L40387	LOCKNUT, 3/8-16, HEAVY	4
6	B5391T82	TWO HOLE PIN	1
7	A0059007	5/8 FLAT WASHER	2
8	L40115	ROLL PIN, 3/16 DIA X 1 1/4 LG	2
9	0-3201001-0-16	GROMMET, 7/8 I.D.	4
10	L41938	GROMMET, 5/8 I.D.	4
11	0-3015004-0-17	HITCH PIN, 1/2 DIA	1

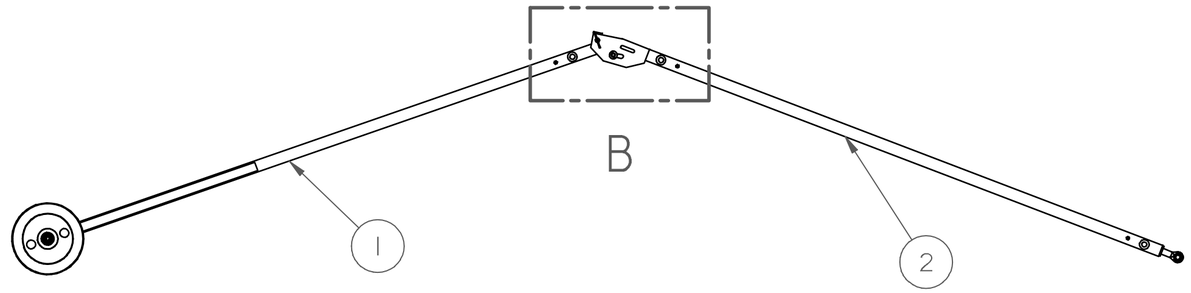

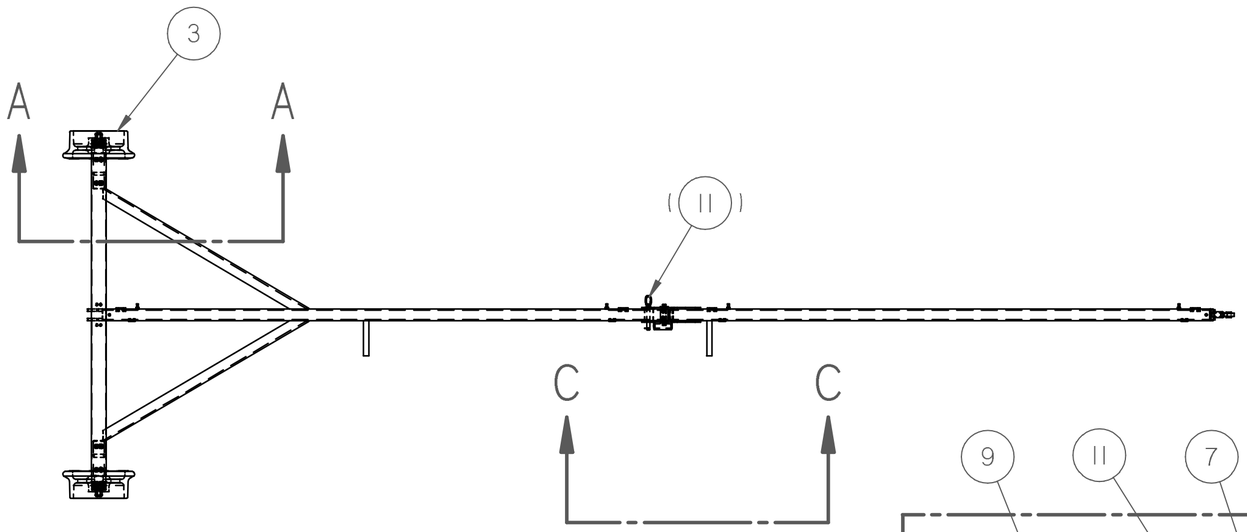

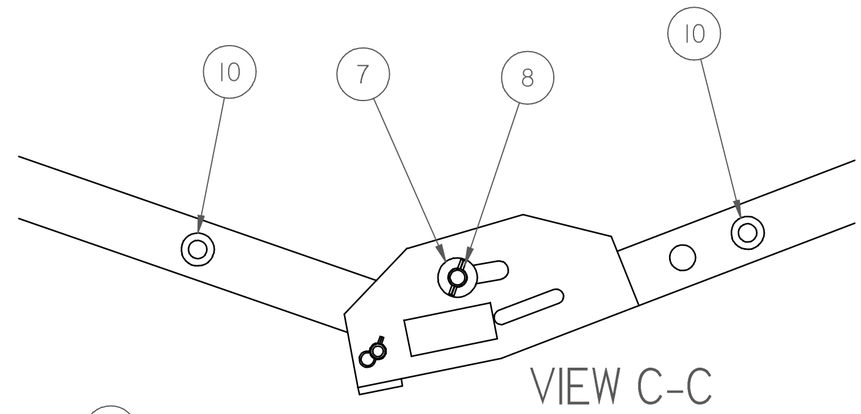

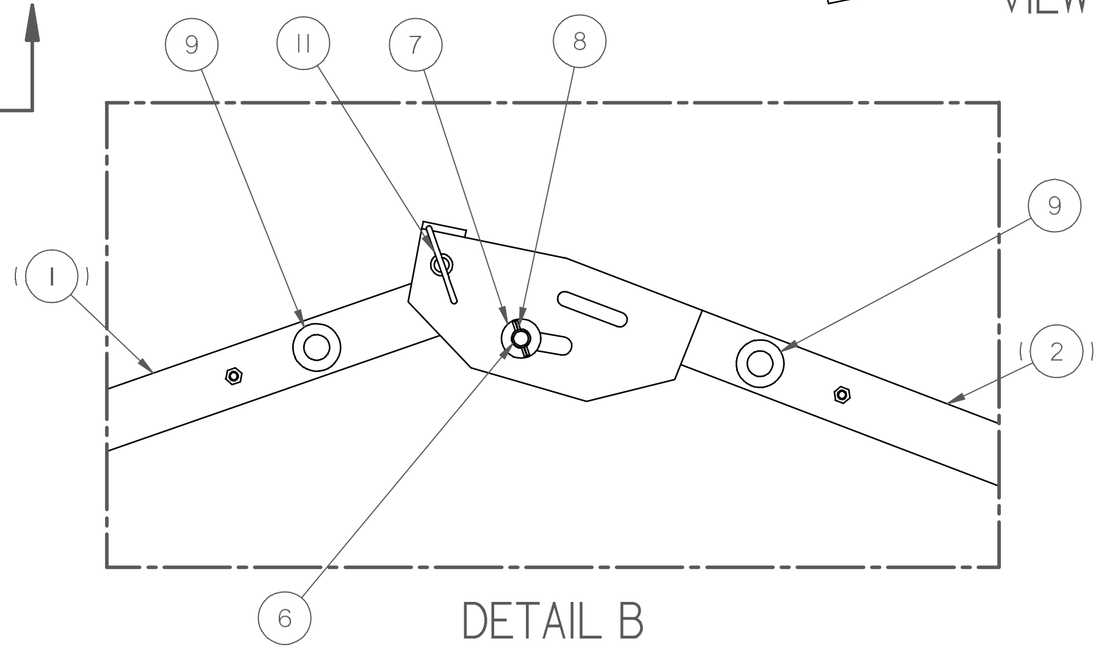

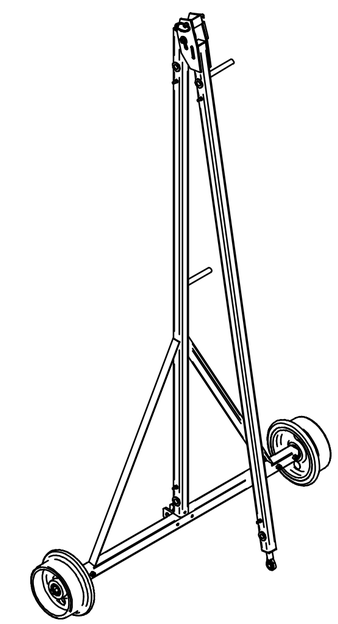

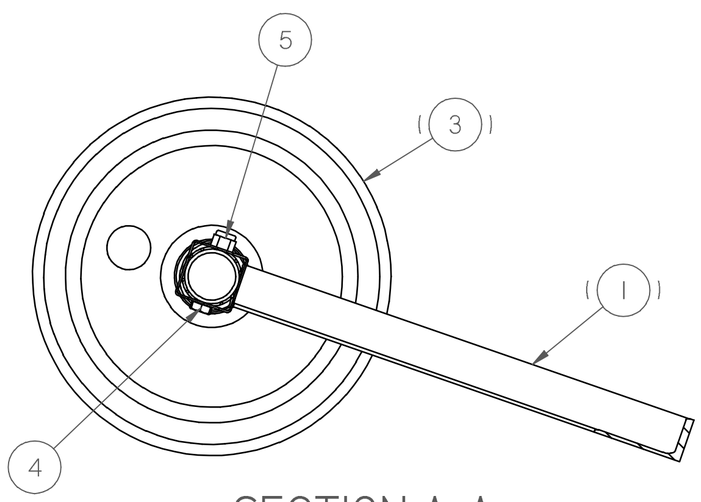

NOTES:

UNFOLD PUSHER BARS OUT TO THEIR MAXIMUM AND USE HOLE INSIDE PLATE AS TEMPLATE TO LOCATE AND DRILL A DIA .56 HOLE FOR LOCKING PIN (IT.11)

Inch [mm]

SOLID EDGE DRAWING

CONFIDENTIAL

© COPYRIGHT 2009 HARSCO. THIS DRAWING OR DOCUMENT IS THE PROPERTY OF HARSCO AND EMBODIES CONFIDENTIAL INFORMATION, TRADE SECRET INFORMATION, AND/OR KNOW-HOW THAT IS THE PROPERTY OF HARSCO. BY ACCEPTING THIS DRAWING OR DOCUMENT, THE RECIPIENT AGREES (1) NOT TO PROVIDE, OR OTHERWISE MAKE AVAILABLE, THE DRAWING OR DOCUMENT, OR ANY INFORMATION OR KNOW-HOW EMBODIED THEREIN, TO ANY THIRD PARTY AND (2) NOT TO REPRODUCE OR USE THE DRAWING OR DOCUMENT TO MANUFACTURE ANY APPARATUS OR DEVICE, WITHOUT THE PRIOR WRITTEN AUTHORIZATION OF HARSCO.

IMPLIED TOLERANCES

ALL DIMENSIONS ARE IN INCHES - TOLERANCE UNLESS OTHERWISE SPECIFIED

NOMINAL SIZE RANGE		INCH PLUS OR MINUS		NOMINAL SIZE RANGE		METRIC PLUS OR MINUS	
OVER	TO	2 PLACE DECIMAL	3 PLACE DECIMAL	OVER	TO	1 PLACE DECIMAL	2 PLACE DECIMAL
0	6	.03	.005	0	150	.8	.13
6	24	.04	.008	150	600	1.0	.20
24	-	.06	.010	600	-	1.5	.25

UNLESS OTHERWISE SPECIFIED ALL MACHINED SURFACES WILL HAVE;
A SURFACE FINISH OF 125 MICROINCHES
ANGULAR TOLERANCE OF ± .50°
CONCENTRICITY WITHIN .010

THIRD ANGLE PROJECTION

UNLESS OTHERWISE SPECIFIED, ALL WELDS SHOULD ADHERE TO THE MOST CURRENT A.W.S WELDING STANDARDS

CHANGE	R/L	REVISION	DATE
ECN-106474	K	SE DRAFT VERSION CREATED	10-05-10

Description: PUSHER BUGGY

Drawing Number: ----------

Machine Type: MARK IV

Model: A6762WAB.asm!Member3

Drawn: bpayyadakkath

Date Drawn: 05 Oct 10

Weight: 140.7 lbm

Scale: 1:20

APVD Desg: BPA

APVD ChEng: HW

Mat'l

HARSCO RAIL

Part Number: A6762WAB

Size: C

Sheet: 1 of 1

Plotted by bpayyadakkath on 2/24/2011 A6762WAB.dft

CONFIDENTIAL
© COPYRIGHT 2009 HARSCO. THIS DRAWING OR DOCUMENT IS THE PROPERTY OF HARSCO AND EMBODIES CONFIDENTIAL INFORMATION, TRADE SECRET INFORMATION, AND/OR KNOW-HOW THAT IS THE PROPERTY OF HARSCO. BY ACCEPTING THIS DRAWING OR DOCUMENT, THE RECIPIENT AGREES (1) NOT TO PROVIDE, OR OTHERWISE MAKE AVAILABLE, THE DRAWING OR DOCUMENT, OR ANY INFORMATION OR KNOW-HOW EMBODIED THEREIN, TO ANY THIRD PARTY AND (2) NOT TO REPRODUCE OR USE THE DRAWING OR DOCUMENT TO MANUFACTURE ANY APPARATUS OR DEVICE, WITHOUT THE PRIOR WRITTEN AUTHORIZATION OF HARSCO.

SOLID EDGE DRAWING

Item Number	Document Number	Title	Quantity
1	X685831	10" WHEEL	1
2	L40213	BEARING	2
3	A0059031	5/8 PLAIN WASHER MED	1
4	Z62175	INSULATING WASHER	2
5	L40006	ESNA NUT 5/8-11	1
6	Z685917	INSULATING BUSHING	1
7	0-1304933-0-01	WHEEL SHAFT	1
8	L40001	RETAINING RING	1

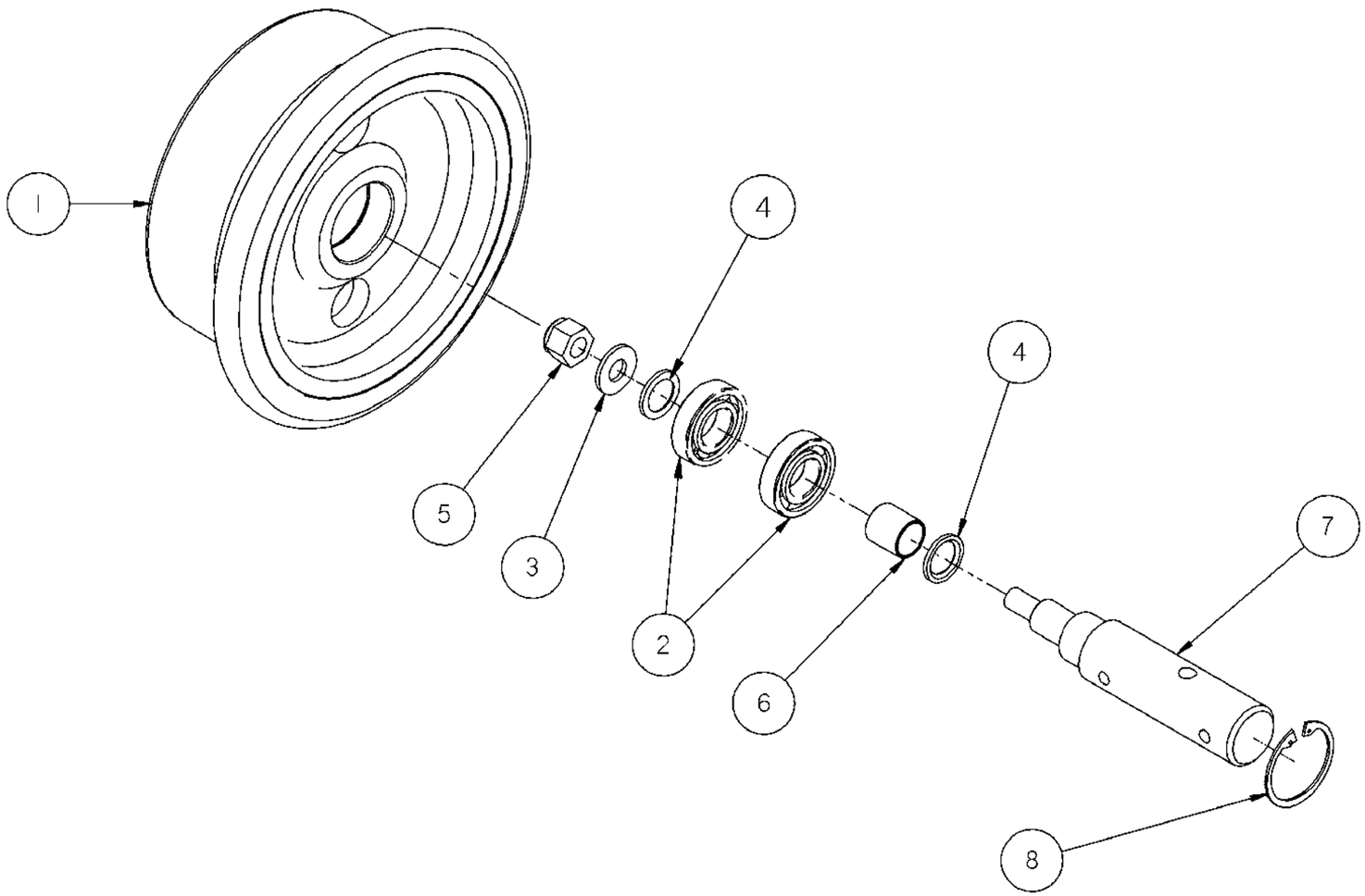

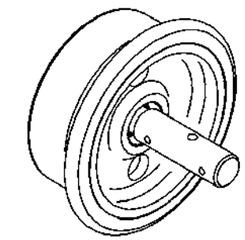

Inch
[mm]

IMPLIED TOLERANCES
ALL DIMENSIONS ARE IN INCHES - TOLERANCE UNLESS OTHERWISE SPECIFIED

NOMINAL SIZE RANGE		INCH PLUS OR MINUS		NOMINAL SIZE RANGE		METRIC PLUS OR MINUS	
OVER	TO	2 PLACE DECIMAL	3 PLACE DECIMAL	OVER	TO	1 PLACE DECIMAL	2 PLACE DECIMAL
0	6	.03	.005	0	150	.8	.13
6	24	04	.008	150	600	1.0	.20
24	-	.06	.010	600	-	1.5	.25

UNLESS OTHERWISE SPECIFIED, ALL MACHINED SURFACES WILL HAVE:
A SURFACE FINISH OF 125 MICROINCHES
ANGULAR TOLERANCE OF ± .50°
CONCENTRICITY WITHIN .010

THIRD ANGLE PROJECTION

UNLESS OTHERWISE SPECIFIED, ALL WELDS SHOULD ADHERE TO THE MOST CURRENT A.W.S WELDING STANDARDS

CHANGE	R/L	REVISION	DATE
ECN-106355	H	REDRAFTED IN NEW TEMPLATE	09-03-10

Description: WHEEL ASSEMBLY, INSULATED

Drawing Number: ----------

Machine Type: MARK IV

Model: 0-2201452-0-01.asm!Member1

Drawn: bpayyadakkath

Date Drawn: 03 Sept 10

Weight: 19.9 lbm

Scale: 1:4

APVD Desg: BPA

APVD ChEng: HW

Mat'l

HARSCO RAIL

Part Number: 0-2201452-0-01

Size: B

Sheet: 1 of 1

Plotted by bpayyadakkath on 9/3/2010 0-2201452-0-01.dft

Item Number	Document Number	Title	Quantity
1	A6826YAA	PUSHER BAR (TUBE 104 3/8" LG)	1
2	A6823XAA	PUSHER BAR (TUBE 99" LG)	1
3	B5391T82	TWO HOLE PIN	1
4	A0059007	5/8 FLAT WASHER	2
5	L40115	ROLL PIN, 3/16 DIA X 1 1/4 LG	2
6	0-3201001-0-16	GROMMET, 7/8 I.D.	4
7	L41938	GROMMET, 5/8 I.D.	4
8	0-3015004-0-17	HITCH PIN, 1/2 DIA	1

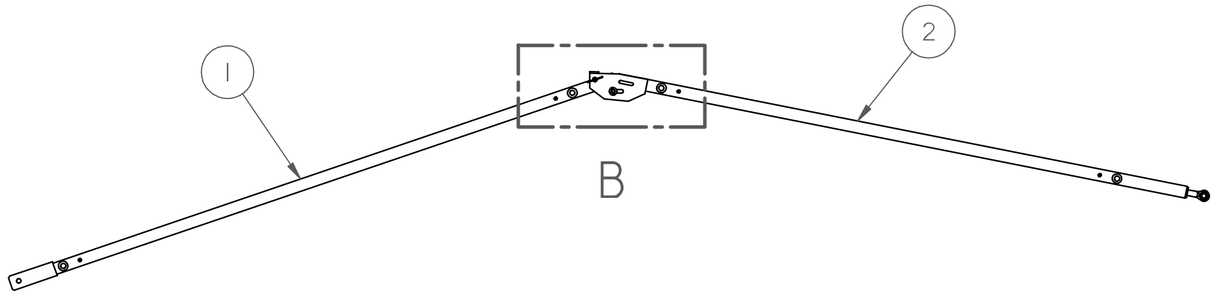

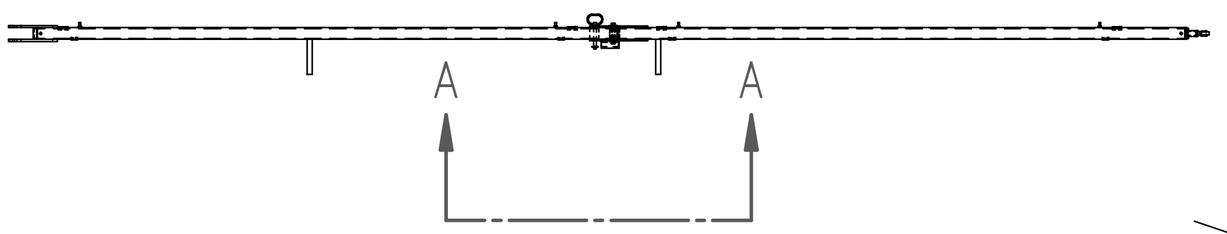

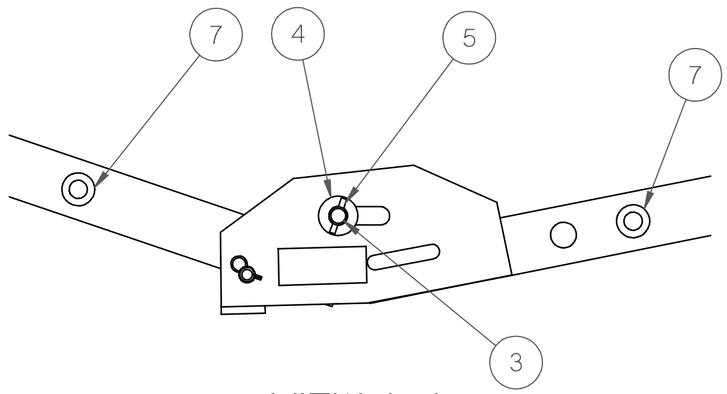

VIEW A-A

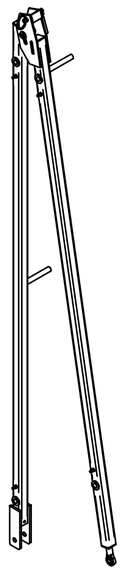

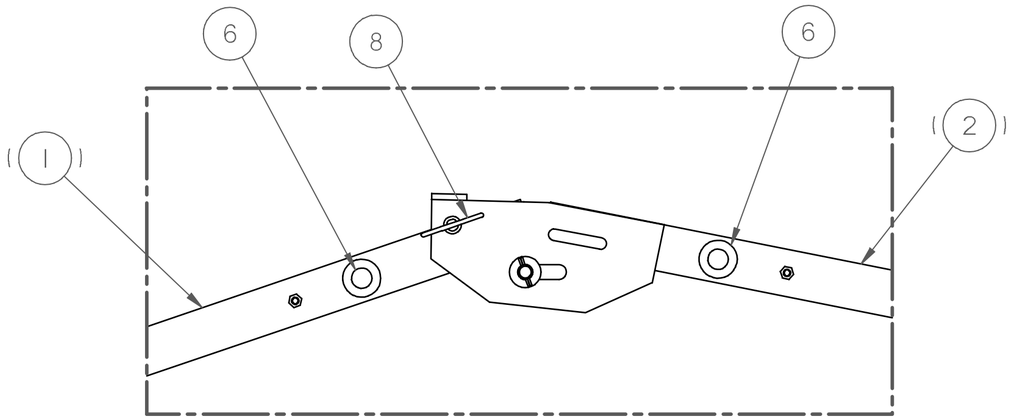

DETAIL B

NOTES:

UNFOLD PUSHER BARS OUT TO THEIR MAXIMUM AND USE HOLE INSIDE PLATE AS TEMPLATE TO LOCATE AND DRILL A DIA .56 HOLE FOR LOCKING PIN (IT.8)

Inch
[mm]

SOLID EDGE DRAWING

CONFIDENTIAL

© COPYRIGHT 2009 HARSCO. THIS DRAWING OR DOCUMENT IS THE PROPERTY OF HARSCO AND EMBODIES CONFIDENTIAL INFORMATION, TRADE SECRET INFORMATION, AND/OR KNOW-HOW THAT IS THE PROPERTY OF HARSCO. BY ACCEPTING THIS DRAWING OR DOCUMENT, THE RECIPIENT AGREES (1) NOT TO PROVIDE, OR OTHERWISE MAKE AVAILABLE, THE DRAWING OR DOCUMENT, OR ANY INFORMATION OR KNOW-HOW EMBODIED THEREIN, TO ANY THIRD PARTY AND (2) NOT TO REPRODUCE OR USE THE DRAWING OR DOCUMENT TO MANUFACTURE ANY APPARATUS OR DEVICE, WITHOUT THE PRIOR WRITTEN AUTHORIZATION OF HARSCO.

IMPLIED TOLERANCES

ALL DIMENSIONS ARE IN INCHES - TOLERANCE UNLESS OTHERWISE SPECIFIED

NOMINAL SIZE RANGE		INCH PLUS OR MINUS		NOMINAL SIZE RANGE		METRIC PLUS OR MINUS	
OVER	TO	2 PLACE DECIMAL	3 PLACE DECIMAL	OVER	TO	1 PLACE DECIMAL	2 PLACE DECIMAL
0	6	.03	.005	0	150	.8	.13
6	24	.04	.008	150	600	1.0	.20
24	-	.06	.010	600	-	1.5	.25

UNLESS OTHERWISE SPECIFIED ALL MACHINED SURFACES WILL HAVE;
A SURFACE FINISH OF 125 MICROINCHES
ANGULAR TOLERANCE OF ±.50°
CONCENTRICITY WITHIN .010

THIRD ANGLE PROJECTION

UNLESS OTHERWISE SPECIFIED, ALL WELDS SHOULD ADHERE TO THE MOST CURRENT A.W.S WELDING STANDARDS

CHANGE	R/L	REVISION	DATE
ECN-106474	K	SE DRAFT VERSION CREATED	10-05-10

Description: PUSHER BAR

Drawing Number: ----------

Machine Type: MARK IV

Model: A6830WAA.asm!Member2

Drawn: bpayyadakkath

Date Drawn: 05 Oct 10

Weight: 89.7 lbm

Scale: 1:20

APVD Desg: BPA

APVD ChEng: HW

Mat'l

HARSCO RAIL

Part Number: A6830WAA

Size: C

Sheet: 1 of 1

Plotted by bpayyadakkath on 2/24/2011 A6830WAA.dft

ITEM	PART NO	QTY	DESCRIPTION
10	0-2201452-0-01	2	WHEEL ASSEMBLY, INSULATED
20	A6834WAA	1	PUSHER BAR
30	A0957T45	1	ROUND BAR
40	A0036072	4	3/8-16 X 3 HH CAPSCREW
50	L40387	4	NUT ELASTIC STOP
60	A0062071	2	1/4-20X5/16 SHDSSCR CUPN
80	0-3201001-0-16	4	GROMMET
90	C8380WAA	1	PUSHER BUGGY FRAME

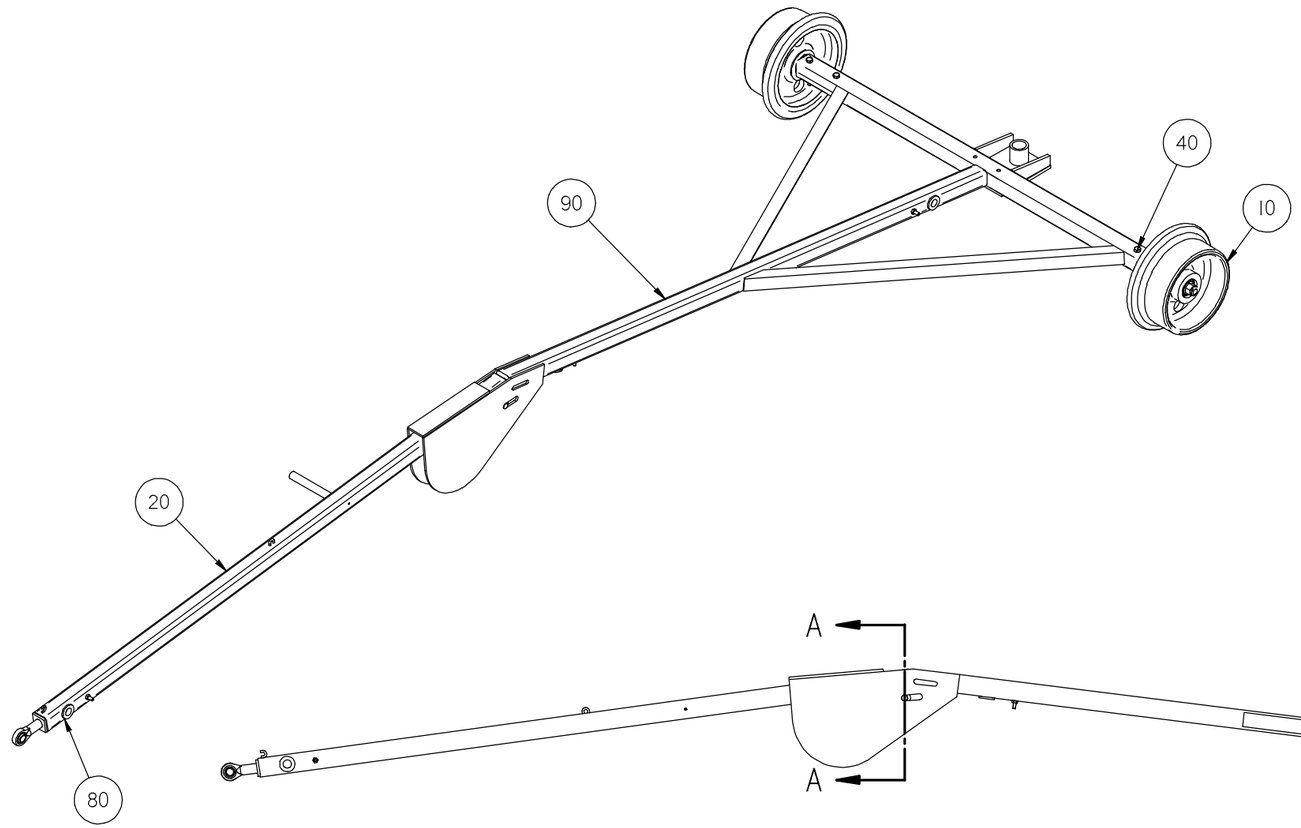

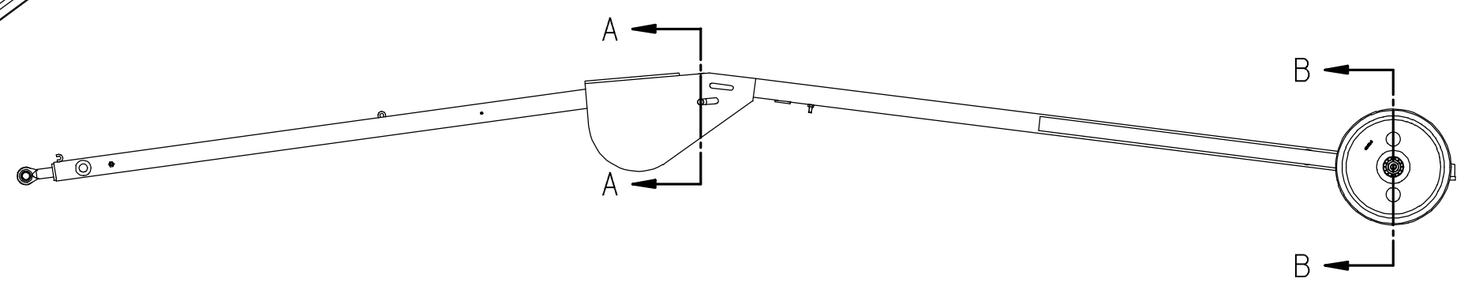

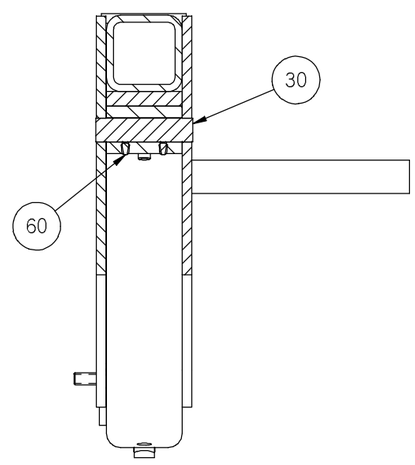

SECTION A-A

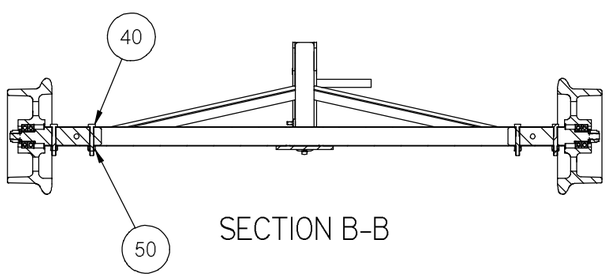

SECTION B-B

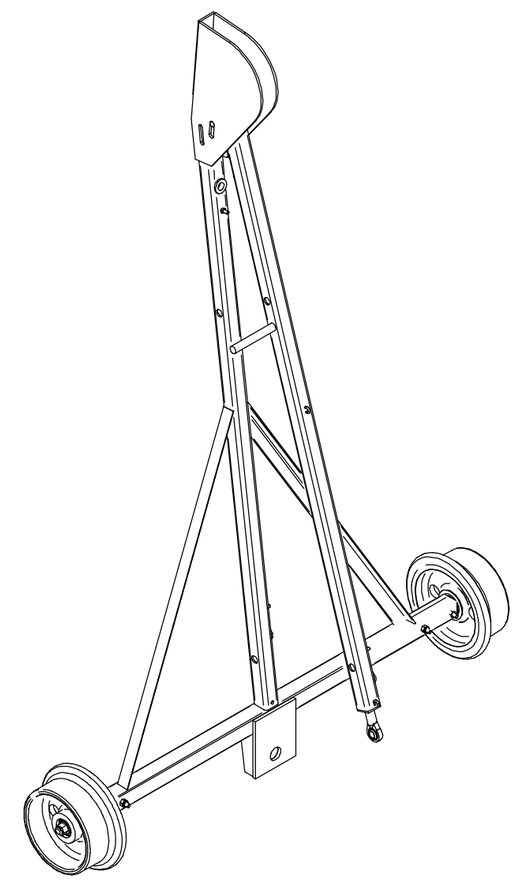

Inch
[mm]

SOLID EDGE DRAWING

CONFIDENTIAL

© COPYRIGHT 2009 HARSCO. THIS DRAWING OR DOCUMENT IS THE PROPERTY OF HARSCO AND EMBODIES CONFIDENTIAL INFORMATION, TRADE SECRET INFORMATION, AND/OR KNOW-HOW THAT IS THE PROPERTY OF HARSCO. BY ACCEPTING THIS DRAWING OR DOCUMENT, THE RECIPIENT AGREES (1) NOT TO PROVIDE, OR OTHERWISE MAKE AVAILABLE, THE DRAWING OR DOCUMENT, OR ANY INFORMATION OR KNOW-HOW EMBODIED THEREIN, TO ANY THIRD PARTY AND (2) NOT TO REPRODUCE OR USE THE DRAWING OR DOCUMENT TO MANUFACTURE ANY APPARATUS OR DEVICE, WITHOUT THE PRIOR WRITTEN AUTHORIZATION OF HARSCO.

IMPLIED TOLERANCES
ALL DIMENSIONS ARE IN INCHES - TOLERANCE UNLESS OTHERWISE SPECIFIED

NOMINAL SIZE RANGE		INCH PLUS OR MINUS		NOMINAL SIZE RANGE		METRIC PLUS OR MINUS	
OVER	TO	2 PLACE DECIMAL	3 PLACE DECIMAL	OVER	TO	1 PLACE DECIMAL	2 PLACE DECIMAL
0	6	.03	.005	0	150	.8	.13
6	24	.04	.008	150	600	1.0	.20
24	-	.06	.010	600	-	1.5	.25

UNLESS OTHERWISE SPECIFIED ALL MACHINED SURFACES WILL HAVE A SURFACE FINISH OF 125 MICROINCHES ANGULAR TOLERANCE OF +-.50° CONCENTRICITY WITHIN .010

THIRD ANGLE PROJECTION

UNLESS OTHERWISE SPECIFIED, ALL WELDS SHOULD ADHERE TO THE MOST CURRENT A.W.S WELDING STANDARDS

CHANGE	R/L	REVISION	DATE
ECN-106528	I	SE DRAFT VERSION CREATED	10-18-10

Description: RECORDER BUGGY
Drawing Number: ———-———-———-———
Machine Type: MARK IV
Model: A8687WAB.asmlMember2
Drawn: bpayyadakkath
Date Drawn: 18 Oct 10
Weight: 138.2 lbm
Scale: 1:10
APVD Dwg: BPA
APVD Dtlng: HW
Mat'l:

HARSCO RAIL

Part Number: A8687WAB
Size: D
Sheet: 1 of 1

Plotted by bpayyadakkath on 3/18/2011 A8687WAB.dft

CONFIDENTIAL
© COPYRIGHT 2009 HARSCO. THIS DRAWING OR DOCUMENT IS THE PROPERTY OF HARSCO AND EMBODIES CONFIDENTIAL INFORMATION, TRADE SECRET INFORMATION, AND/OR KNOW-HOW THAT IS THE PROPERTY OF HARSCO. BY ACCEPTING THIS DRAWING OR DOCUMENT, THE RECIPIENT AGREES (1) NOT TO PROVIDE, OR OTHERWISE MAKE AVAILABLE, THE DRAWING OR DOCUMENT, OR ANY INFORMATION OR KNOW-HOW EMBODIED THEREIN, TO ANY THIRD PARTY AND (2) NOT TO REPRODUCE OR USE THE DRAWING OR DOCUMENT TO MANUFACTURE ANY APPARATUS OR DEVICE, WITHOUT THE PRIOR WRITTEN AUTHORIZATION OF HARSCO.

SOLID EDGE DRAWING

Item Number	Document Number	Title	Quantity
1	X685831	10" WHEEL	1
2	L40213	BEARING	2
3	A0059031	5/8 PLAIN WASHER MED	1
4	Z62175	INSULATING WASHER	2
5	L40006	ESNA NUT 5/8-11	1
6	Z685917	INSULATING BUSHING	1
7	0-1304933-0-01	WHEEL SHAFT	1
8	L40001	RETAINING RING	1

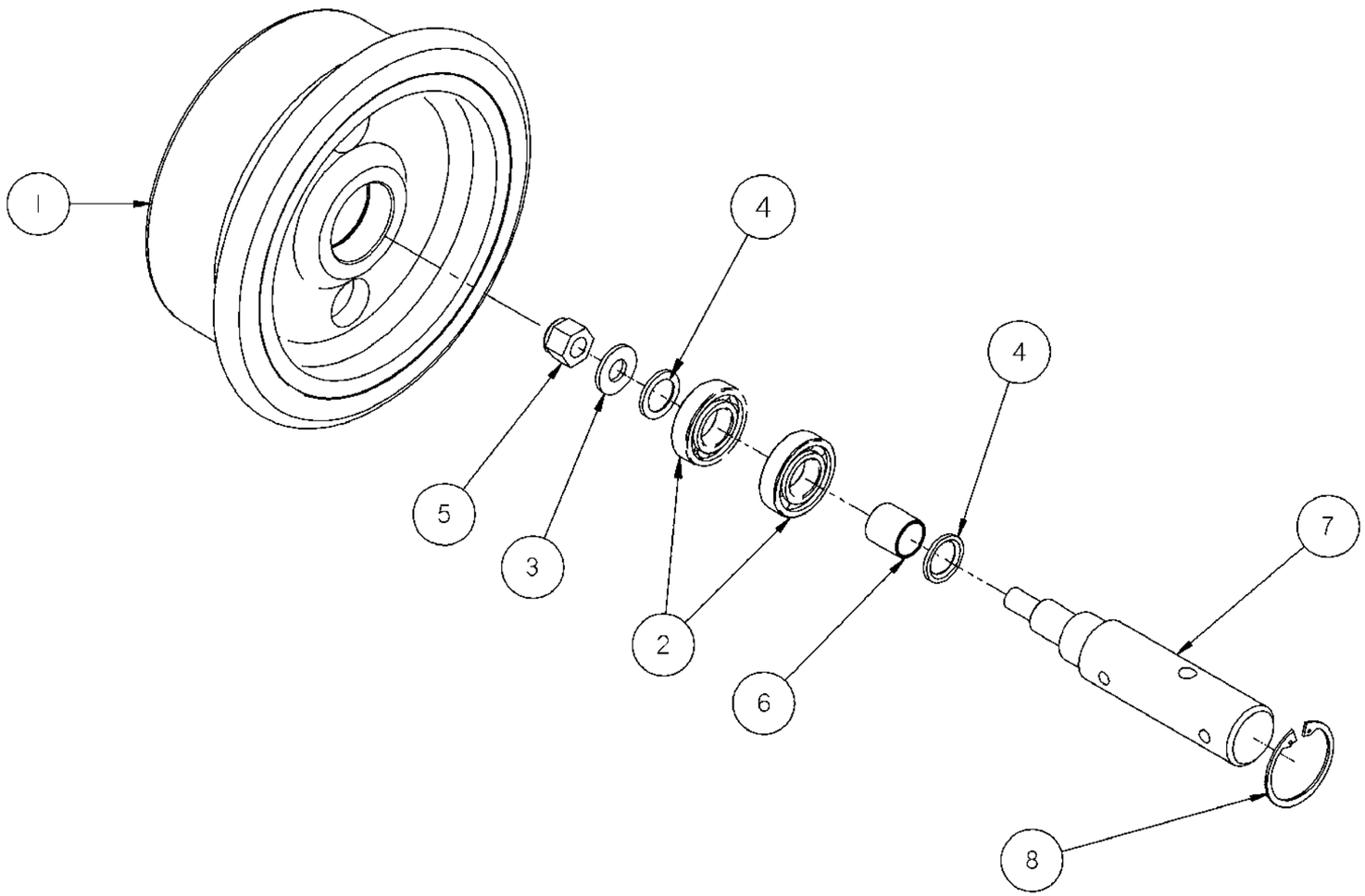

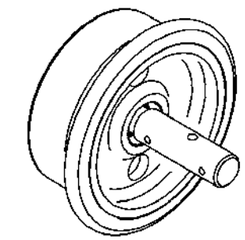

Inch
[mm]

IMPLIED TOLERANCES
ALL DIMENSIONS ARE IN INCHES - TOLERANCE UNLESS OTHERWISE SPECIFIED

NOMINAL SIZE RANGE		INCH PLUS OR MINUS		NOMINAL SIZE RANGE		METRIC PLUS OR MINUS	
OVER	TO	2 PLACE DECIMAL	3 PLACE DECIMAL	OVER	TO	1 PLACE DECIMAL	2 PLACE DECIMAL
0	6	.03	.005	0	150	.8	.13
6	24	04	.008	150	600	1.0	.20
24	-	.06	.010	600	-	1.5	.25

UNLESS OTHERWISE SPECIFIED, ALL MACHINED SURFACES WILL HAVE:
A SURFACE FINISH OF 125 MICROINCHES
ANGULAR TOLERANCE OF ± .50°
CONCENTRICITY WITHIN .010

THIRD ANGLE PROJECTION

UNLESS OTHERWISE SPECIFIED, ALL WELDS SHOULD ADHERE TO THE MOST CURRENT A.W.S WELDING STANDARDS

CHANGE	R/L	REVISION	DATE
ECN-106355	H	REDRAFTED IN NEW TEMPLATE	09-03-10

Description: WHEEL ASSEMBLY, INSULATED

Drawing Number: ----------

Machine Type: MARK IV

Model: 0-2201452-0-01.asm!Member1

Drawn: bpayyadakkath

Date Drawn: 03 Sept 10

Weight: 19.9 lbm

Scale: 1:4

APVD Desg: BPA

APVD ChEng: HW

Mat'l

HARSCO RAIL

Part Number: 0-2201452-0-01

Size: B

Sheet: 1 of 1

Plotted by bpayyadakkath on 9/3/2010 0-2201452-0-01.dft

PNEUMATIC COMPONENTS

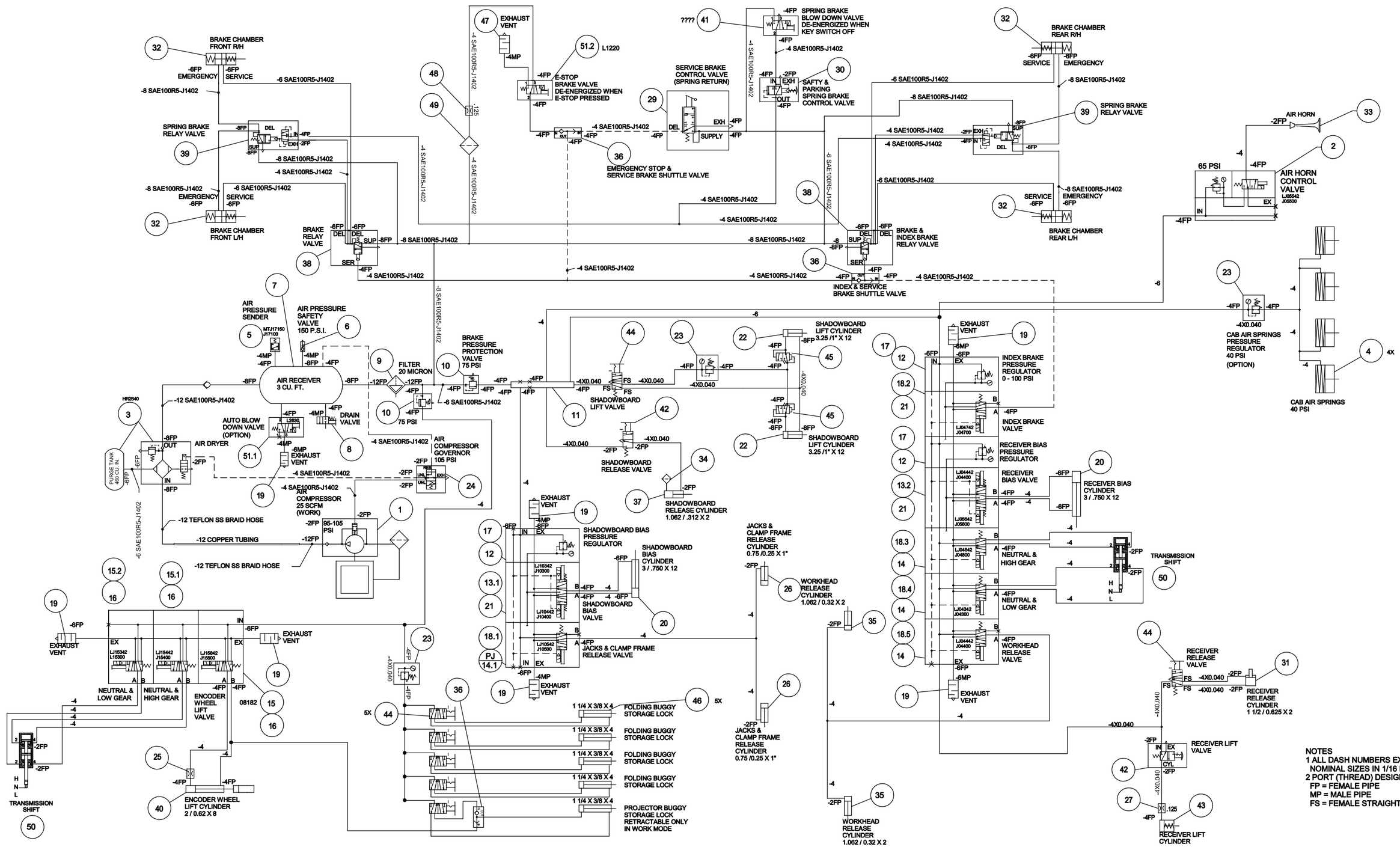

NOTES
1 ALL DASH NUMBERS EXPRESSED ARE NOMINAL SIZES IN 1/16 INCREMENTS.
2 PORT (THREAD) DESIGNATION
FP = FEMALE PIPE
MP = MALE PIPE
FS = FEMALE STRAIGHT (SAE O RING)

Inch
[mm]

CONFIDENTIAL
© COPYRIGHT 2010 HARSCO. THIS DRAWING OR DOCUMENT IS THE PROPERTY OF HARSCO AND EMBODIES CONFIDENTIAL INFORMATION, TRADE SECRET INFORMATION, AND/OR KNOW-HOW THAT IS THE PROPERTY OF HARSCO. BY ACCEPTING THIS DRAWING OR DOCUMENT, THE RECIPIENT AGREES (1) NOT TO PROVIDE, OR OTHERWISE MAKE AVAILABLE, THE DRAWING OR DOCUMENT, OR ANY INFORMATION OR KNOW-HOW EMBODIED THEREIN, TO ANY THIRD PARTY AND (2) NOT TO REPRODUCE OR USE THE DRAWING OR DOCUMENT TO MANUFACTURE ANY APPARATUS OR DEVICE, WITHOUT THE PRIOR WRITTEN AUTHORIZATION OF HARSCO.

NOMINAL SIZE RANGE OVER	TO	INCH PLUS OR MINUS 2 PLACE DECIMAL	3 PLACE DECIMAL	NOMINAL SIZE RANGE OVER	TO	METRIC PLUS OR MINUS 1 PLACE DECIMAL	2 PLACE DECIMAL
0	6	.03	.005	0	150	.8	.13
6	24	.04	.008	150	600	1.0	.20
24	-	.06	.010	600	-	1.5	.25

UNLESS OTHERWISE SPECIFIED ALL MACHINED SURFACES WILL HAVE A SURFACE FINISH OF 125 MICRONCHES ANGULAR TOLERANCE OF ±5' CONCENTRICITY WITHIN .010

THIRD ANGLE PROJECTION

UNLESS OTHERWISE SPECIFIED, ALL WELDS SHOULD ADHERE TO THE MORT CURRENT A.W.S WELDING STANDARDS

CHANGE	R/L	REVISION	DR	DATE
EC500537	A	RELEASE	BPA	2/15/11
EC501253	B	CORRECTED TRANSMISSION CIRCUIT, ADDED 51	BPA	5/31/11
EC501954	C	UPDATED WIRE NUMBERS	BPA	9/6/11

Description: PNEUMATIC SCHEMATIC

HARSCO RAIL

Material:
Weight:
Machine Type: MK IV
Drawn: badler
Date Drawn: 5/31/2011
Part Number: 5004651
Size: D
Sheet: 1 of 2

SOLID EDGE DRAWING — DO NOT SCALE

Plotted by badler on 9/20/2011 5004651.dft

PARTS LIST

ITEM NO	PART NUMBER	DESCRIPTION	
1	2013116	AIR COMPRESSOR	X
2	D4121Y02	PRESS RED VALVE ASSY	X
3	C9785X01	DRYER & PURGE TANK KIT	X
4	C6337Y01	PNEUMATIC SPRING (CAB)	X
5	3400894	SENDER	X
6	L423617	SAFETY VALVE	X
7	0-3404000-0-05	AIR RESERVOIR	X
8	A3280Y01	AIR TANK DRAIN VALVE	X
9	0-3432000-0-02	AIR FILTER	X
10	A6519Y01	PRESS. PROTECTION V.	X
11	A7811Y01	AIR MANIFOLD	X
12	0-3413005-0-18	STACKING REGULATOR	X
13	D0393Y01	DBL. SOL. VALVE 3/4	X
14	0-3401000-0-06	MANIFOLD EXPILOT	X
15	D0393Y02	SNGL. SOL. VALVE 2/4	X
16	0-3401000-0-05	MANIFOLD INPILOT	X
17	0-3401000-0-09	MANIFOLD, PRESS. REG.	X
18	D0393Y03	SNGL. SOL.VALVE 2/4	X
19	0-3350004-0-06	DUST EXCLUDER 3/8MP	X
20	G5869Y01	AIR CYLINDER	X
21	0-3401000-0-13	MANIFOLD EXPILOT	X
22	CO839Y01	AIR CYLINDER LIFT	X
23	L422845	PRESS. REGULATOR	X
24	L423613	GOVERNOR	X
25	A0758Y06	0RIFICE FITTING 0.031	X
26	L424468	AIR CYL. C/F RELEASE	X
27	A0758Y14	ORIFICE FITTING (.125)	X
28	L425194	CHECK VALVE, 2-WAY	X
29	4008071	VALVE, BRAKE, SPR RET	X
30	L422515	SAFETY&PARKING V.	X
31	A3651Y06	AIR CYLINDER	X
32	350886-1	BRAKE CHAMBER	X
33	Z780309-005	AIR HORN	X

PARTS LIST

ITEM NO	PART NUMBER	DESCRIPTION	
34	L424009	1/8 NPT VENT	X
35	Y767203-001	AIR CYLINDER W/H RLS	X
36	0-3410004-0-02	SHUTTLE VALVE	X
37	Y766898-001	AIR CYLINDER	X
38	A5045Y01	VALVE, RELAY	X
39	A5045Y02	VALVE, RELAY	X
40	0-3470007-0-01	AIR CYLINDER	X
41	0-3413003-0-15	SGL.SOL.3WAY 2 POSITION	X
42	L424114	AIR VALVE 2/3	X
43	0-3551009-0-02	AIR CYLINDER	X
44	D4741Y01	AIR VALVE 2/4 WAY	X
45	L422629	QUICK EXHAUST VALVE	X
46	0-3470019-0-14	AIR CYLINDER	X
47	L423741	FILTER MUFFLER	X
48	A0758Y14	FITTING FIXED ORIFICE	X
49	L40316	SNUBBER GAUGE	X
50	2013625	AIR CYLINDER-DOUBLE	X
51	5006344	AIR VALVE	X

Inch
[mm]

CONFIDENTIAL
© COPYRIGHT 2010 HARSCO. THIS DRAWING OR DOCUMENT IS THE PROPERTY OF HARSCO AND EMBODIES CONFIDENTIAL INFORMATION, TRADE SECRET INFORMATION, AND/OR KNOW-HOW THAT IS THE PROPERTY OF HARSCO. BY ACCEPTING THIS DRAWING OR DOCUMENT, THE RECIPIENT AGREES (1) NOT TO PROVIDE, OR OTHERWISE MAKE AVAILABLE, THE DRAWING OR DOCUMENT, OR ANY INFORMATION OR KNOW-HOW EMBODIED THEREIN, TO ANY THIRD PARTY AND (2) NOT TO REPRODUCE OR USE THE DRAWING OR DOCUMENT TO MANUFACTURE ANY APPARATUS OR DEVICE, WITHOUT THE PRIOR WRITTEN AUTHORIZATION OF HARSCO.

NOMINAL SIZE RANGE		INCH PLUS OR MINUS	
OVER	TO	2 PLACE DECIMAL	3 PLACE DECIMAL
0	6	.03	.005
6	24	.04	.008
24	-	.06	.010

NOMINAL SIZE RANGE		METRIC PLUS OR MINUS	
OVER	TO	1 PLACE DECIMAL	2 PLACE DECIMAL
0	150	.8	.13
150	600	1.0	.20
600	-	1.5	.25

UNLESS OTHERWISE SPECIFIED ALL MACHINED SURFACES WILL HAVE A SURFACE FINISH OF 125 MICROINCHES ANGULAR TOLERANCE OF ±.5° CONCENTRICITY WITHIN .010

THIRD ANGLE PROJECTION

UNLESS OTHERWISE SPECIFIED, ALL WELDS SHOULD ADHERE TO THE MOST CURRENT A.W.S WELDING STANDARDS

CHANGE	R/L	REVISION	DR	DATE
EC500537	A	RELEASE	BPA	2/15/11
EC501253	B	ITEM 5 WAS H5133WAA, ADDED ITEM 51	BPA	5/31/11
EC501954	C	ITEM 1 WAS G3489Y04	BPA	9/6/11

Description: PNEUMATIC SCHEMATIC

HARSCO RAIL

Material | Machine Type: MK IV | Size: D

Weight | Drawn: badler | Date Drawn: 5/31/2011 | Part Number: 5004651 | Sheet 2 of 2

SOLID EDGE DRAWING | DO NOT SCALE

Plotted by badler on 9/20/2011 5004651.dft

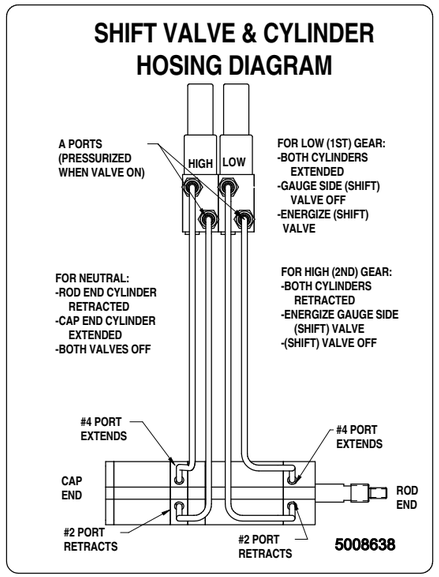

HOSING DIAGRAM
FRONT & REAR

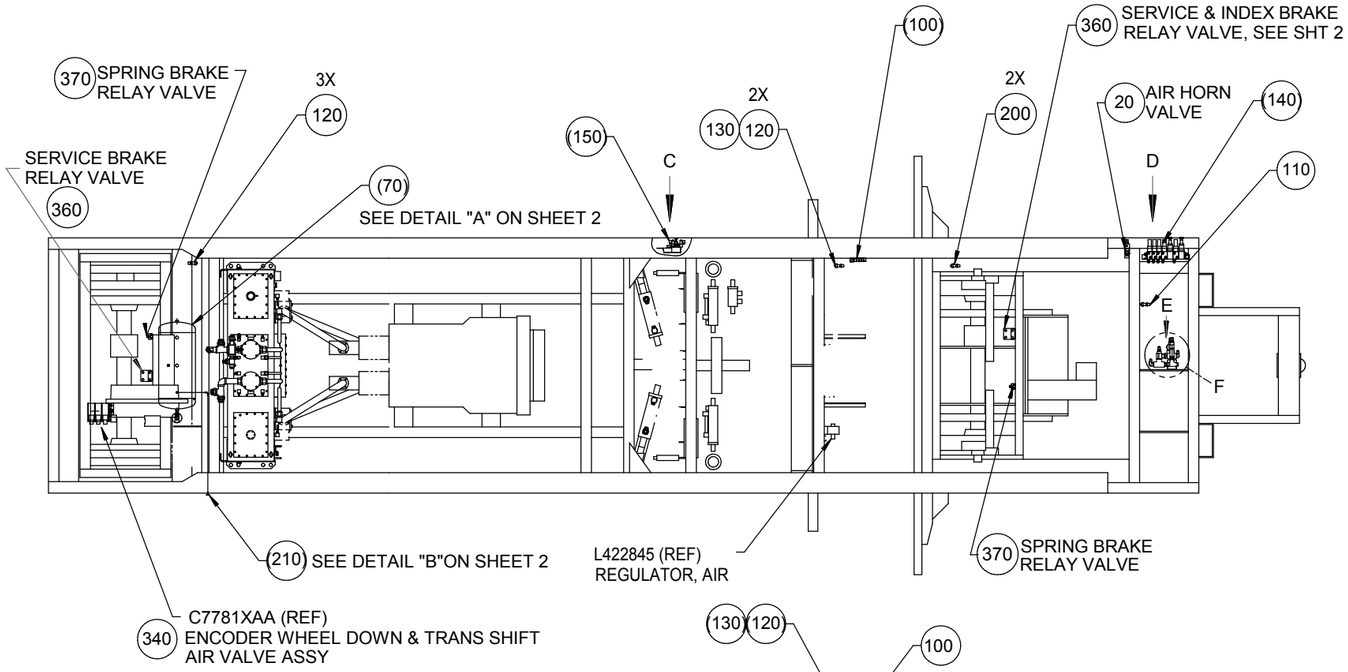

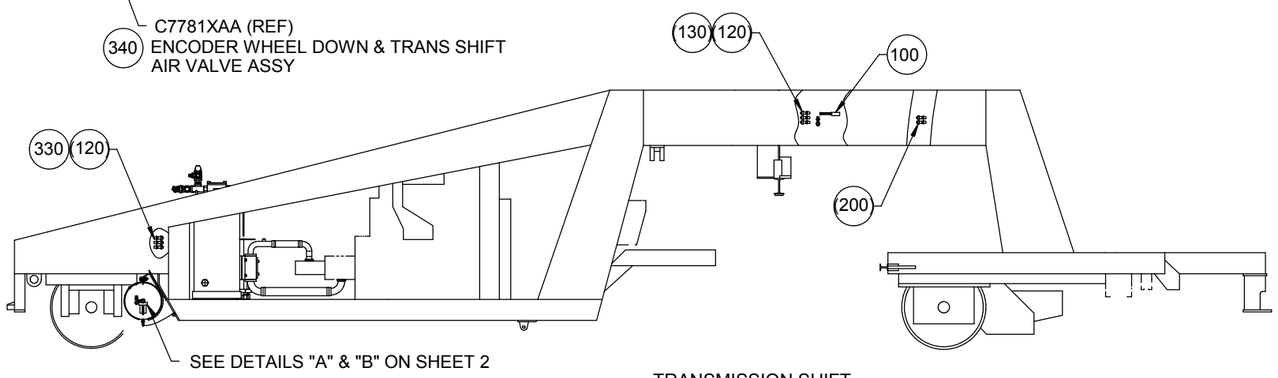

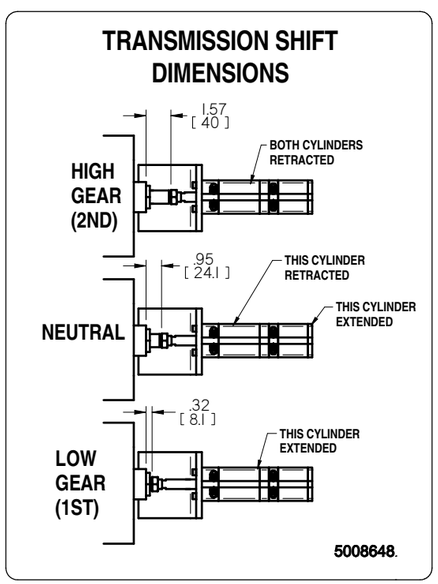

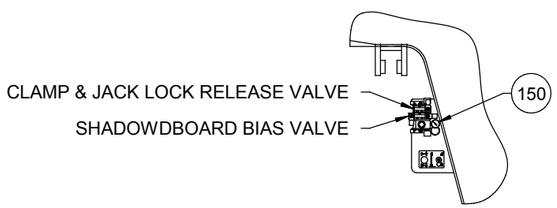

VIEW C

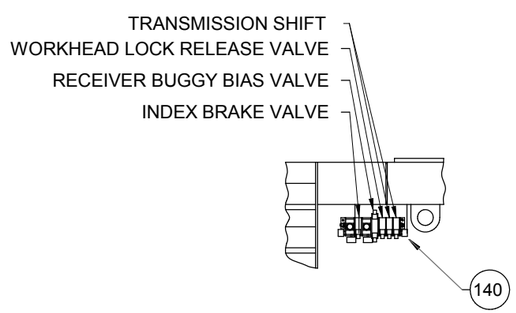

VIEW D

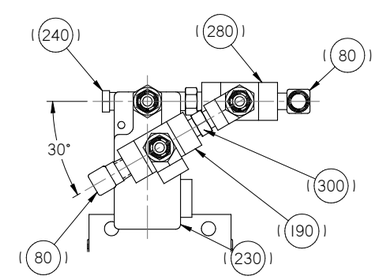

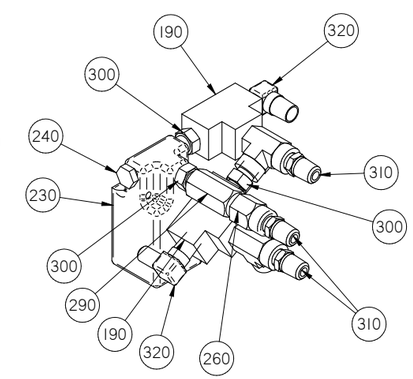

DETAIL "F"

ITEM	PART NUMBER	DESCRIPTION	QTY
10	L411407	PLUG, HEX. PIPE	1
20	D4121Y02	PRESS RED VALVE ASSY	1
30	F010584	DC-ELB90 12X8 NPT	1
40	F024212	DC-STR 8NPTX4NPT	1
50	3400894	PRESSURE TRANSDUCER, 200	1
60	L423617	SAFETY VALVE	1
70	0-3404000-0-05	AIR RECEIVER TANK	1
80	F010692	DC-TEE 8FPTX8NPTX8FPT	1
90	0-3432000-0-02	AIR LINE FILTER	1
100	A6519Y01	PRESSURE PROTECTION	2
110	F014861	DC-STR 8X8 BH	1
120	F020452	DC-STR 4X4 BH	5
130	F016945	DC-TEE 8X8BHX8	1
140	C7786XAB	INDEX BRAKE VALVE ASSY	REF
150	C7788XAA	SHADOWBOARD VALVE ASSY	REF
160	F011243	DC-STR 8NPTX8NPT	1
170	F011078	DC-ELB90 4NPTX4FPT	1
180	F014590	DC-STR 4FPTX8NPT	1
190	0-3410004-0-02	SHUTTLE VALVE	2
200	F014466	DC-ELB90 4X4BH	2
210	Z686508	CENTER JACK RING	1
220	A3280Y01	VALVE-AIR TANK DRAIN	1
230	5006344	AIR VALVE	1
240	L423741	FILTER MUFFLER	1
250	A0758Y14	FITTING FIXED ORIFICE	1
260	L40316	SNUBER GAUGE	1
270	F012054	DC-ELB90 8X8NPT	1
280	F015219	DC-TEE 8X8FSX8	1
290	F010680	DC-TEE 4FPTX4NPTX4FPT	3
300	F011074	DC-STR 4NPTX4NPT	3
310	F012318	DC-STR 4X4NPT *	3
320	F011937	DC-ELB90 4X4NPT	3
330	B1623Y05	1 1/4C0RG. CONDUIT	8
340	C7781XAA	FRONT SHIFTER VALVE ASSY	REF
350	178520	CHECK VALVE	1
360	A5045Y01	VALVE,RELAY	2
370	A5045Y02	VALVE RELAY	2
380	146291	DC-EL90 4X8 NPT	1
390	F011233	DC-TEE 8FPTX8FPTX8NPT	1
400	F024731	DC-STR 4FSX4NPT	1
410	F011621	DC-STR 8FPTX16NPT	1
420	F011339	ELBOW 90 DEGREE	1
430	F012027	DC-STR 8X8BPT	1
440	F011079	DC-STR 6NPTX4FPT	1
450	L425348	STOP LIGHT SWITCH	1
460	F010994	DC-STR 6X4NPT	1

SOLID EDGE DRAWING

CONFIDENTIAL
© COPYRIGHT 2001 HARSCO TRACK TECHNOLOGIES. THIS DRAWING OR DOCUMENT IS THE PROPERTY OF HARSCO TRACK TECHNOLOGIES AND EMBODIES CONFIDENTIAL INFORMATION, TRADE SECRET INFORMATION, AND/OR KNOW-HOW THAT IS THE PROPERTY OF HARSCO TRACK TECHNOLOGIES. BY ACCEPTING THIS DRAWING OR DOCUMENT, THE RECIPIENT AGREES (1) NOT TO PROVIDE, OR OTHERWISE MAKE AVAILABLE, THE DRAWING OR DOCUMENT, OR ANY INFORMATION OR KNOW-HOW EMBODIED THEREIN, TO ANY THIRD PARTY AND (2) NOT TO REPRODUCE OR USE THE DRAWING OR DOCUMENT TO MANUFACTURE ANY APPARATUS OR DEVICE, WITHOUT THE PRIOR WRITTEN AUTHORIZATION OF HARSCO TRACK TECHNOLOGIES.

IMPLIED TOLERANCES
ALL DIMENSIONS ARE IN INCHES - TOLERANCE UNLESS OTHERWISE SPECIFIED

INCH NOMINAL SIZE RANGE OVER	TO	2 PLACE DECIMAL	3 PLACE DECIMAL	METRIC NOMINAL SIZE RANGE OVER	TO	1 PLACE DECIMAL	2 PLACE DECIMAL
0	6	.03	.005	0	150	.8	.13
6	24	.04	.008	150	600	1.0	.20
24	-	.06	.010	-	600	1.5	.25

PLUS OR MINUS

UNLESS OTHERWISE SPECIFIED ALL MACHINED SURFACES WILL HAVE:
A SURFACE FINISH OF 125 MICRONCHES
ANGULAR TOLERANCE OF ± .50°
CONCENTRICITY WITHIN .010

THIRD ANGLE PROJECTION

UNLESS OTHERWISE SPECIFIED ALL WELDS SHOULD ADHERE TO THE LATEST HTT WELDING SPECIFICATION 101

CHANGE	R/L	REVISION		DATE
EC500370	A	RELEASE		1/19/11
EC500985	B	ADDED ITEMS 350 - 370	MLT	4-25-11
EC501253	C	50 WAS H5133WAA, 230 WAS 0-3413003-0-15, ADDED 380-430	BPA	5/31/11
EC501637	D	360 QTY WAS 1, 370 QTY WAS 1	BPA	7/28/11
EC502615	E	ADDED 440-460, 290 QTY WAS 2	BPA	1/6/12

Description: PNEUMATIC COMPONENTS
Drawing Number: ----------
Machine Type: MKIV
Model: 5004648.asm
Drawn: badler
Date Drawn: 1/13/11
Weight: 0.0 lbm
Scale:
APVD Desig: BPA
APVD ChEng: HW
Mat'l: - -

HTT
Harsco Track Technologies
Harsco
Columbia, SC

Part Number: 5004648
Size: D
Sheet: 1 of 2

Plotted by badler on 1/11/2012 5004648.dft

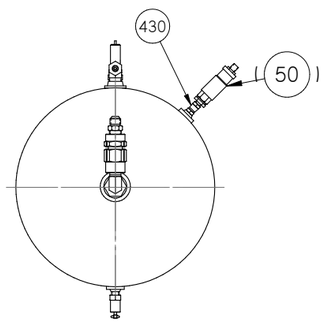

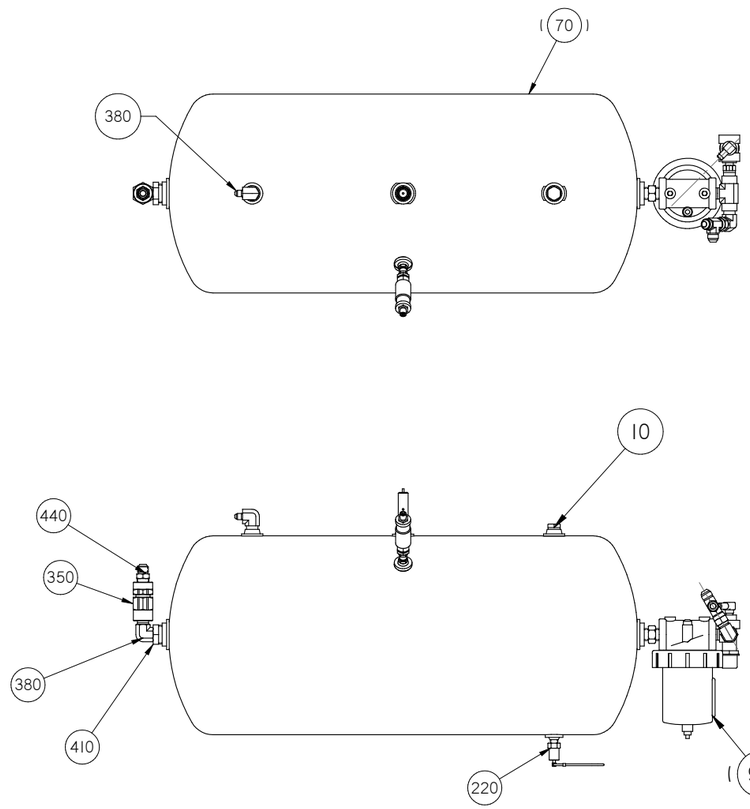

(FRONT VIEW)

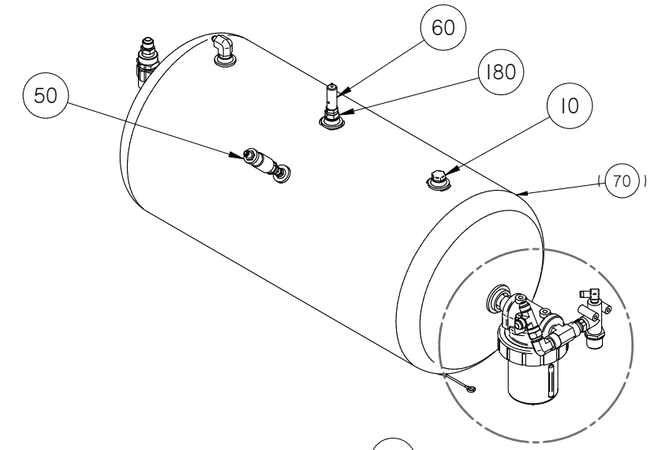

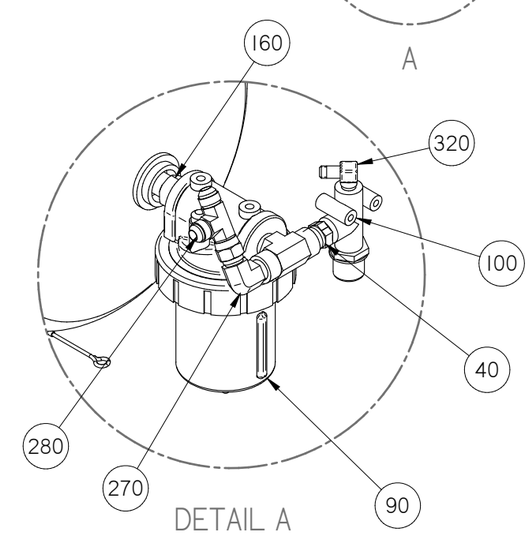

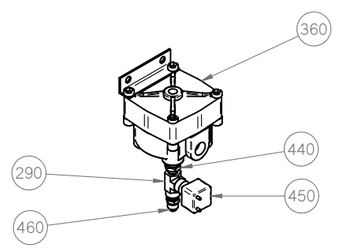

REAR SERVICE & INDEX BRAKE
RELAY VALVE

NOTE:

1. CUT CABLE END OFF & FEED CABLE THRU GUIDES. CUT CABLE TO DESIRED LENGTH & INSTALL PULL RING.

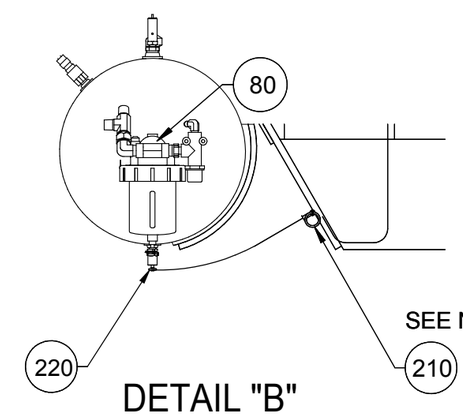

SOLID EDGE DRAWING

CONFIDENTIAL
© COPYRIGHT 2001 HARSCO TRACK TECHNOLOGIES. THIS DRAWING OR DOCUMENT IS THE PROPERTY OF HARSCO TRACK TECHNOLOGIES AND EMBODIES CONFIDENTIAL INFORMATION, TRADE SECRET INFORMATION, AND/OR KNOW-HOW THAT IS THE PROPERTY OF HARSCO TRACK TECHNOLOGIES. BY ACCEPTING THIS DRAWING OR DOCUMENT, THE RECIPIENT AGREES (1) NOT TO PROVIDE, OR OTHERWISE MAKE AVAILABLE, THE DRAWING OR DOCUMENT, OR ANY INFORMATION OR KNOW-HOW EMBODIED THEREIN, TO ANY THIRD PARTY AND (2) NOT TO REPRODUCE OR USE THE DRAWING OR DOCUMENT TO MANUFACTURE ANY APPARATUS OR DEVICE, WITHOUT THE PRIOR WRITTEN AUTHORIZATION OF HARSCO TRACK TECHNOLOGIES.

IMPLIED TOLERANCES
ALL DIMENSIONS ARE IN INCHES - TOLERANCE UNLESS OTHERWISE SPECIFIED

NOMINAL SIZE RANGE		INCH PLUS OR MINUS		NOMINAL SIZE RANGE		METRIC PLUS OR MINUS	
OVER	TO	2 PLACE DECIMAL	3 PLACE DECIMAL	OVER	TO	1 PLACE DECIMAL	2 PLACE DECIMAL
0	6	.03	.005	0	150	.8	.13
6	24	.04	.008	150	600	1.0	.20
24	-	.06	.010	-	600	1.5	.25

UNLESS OTHERWISE SPECIFIED ALL MACHINED SURFACES WILL HAVE:
A SURFACE FINISH OF 125 MICRONCHES
ANGULAR TOLERANCE OF ± .50°
CONCENTRICITY WITHIN .010

THIRD ANGLE PROJECTION

UNLESS OTHERWISE SPECIFIED ALL WELDS SHOULD ADHERE TO THE LATEST HTT WELDING SPECIFICATION 101

CHANGE	R/L	REVISION		DATE
EC500370	A	RELEASE		
EC500985	B	ADDED ITEMS 350 - 370	MLT	4-25-11
EC501253	C	ADDED 380-440	BPA	6///11
EC502615	E	ADDED 440-460	BPA	1/6/12

Description: PNEUMATIC COMPONENTS
Drawing Number: ----------
Machine Type: MKIV
Model: 5004648.asm
Drawn: badler
Date Drawn:
Weight: 0.0 lbm
Scale:
APVD Desg:
APVD ChEng:
Mat'l: - -

HTT
Harsco Track Technologies
Harsco
Columbia, SC

Part Number: 5004648
Size: D
Sheet: 2 of 2

Plotted by badler on 1/11/2012 5004648.dft

ENG.DWG.NO.
C7781XAA

REVISIONS							
NO	ER	DESCRIPTION	ZONE	DR	CK	APP	MF
1	5860 .237	NEW RELEASE					
2	6583 .1	IT. 3 WAS 0-3413005-0-24.		MLT	JA	ADL	
3	6864 .57	PICTORIAL CHANGE TO IT-1; ADDED 11/16 DIM.		HAP	DGV	AML	
4	7177	IT 5 WAS L420114, IT 6 WAS A5443Y13 8 JUN 95		AO			

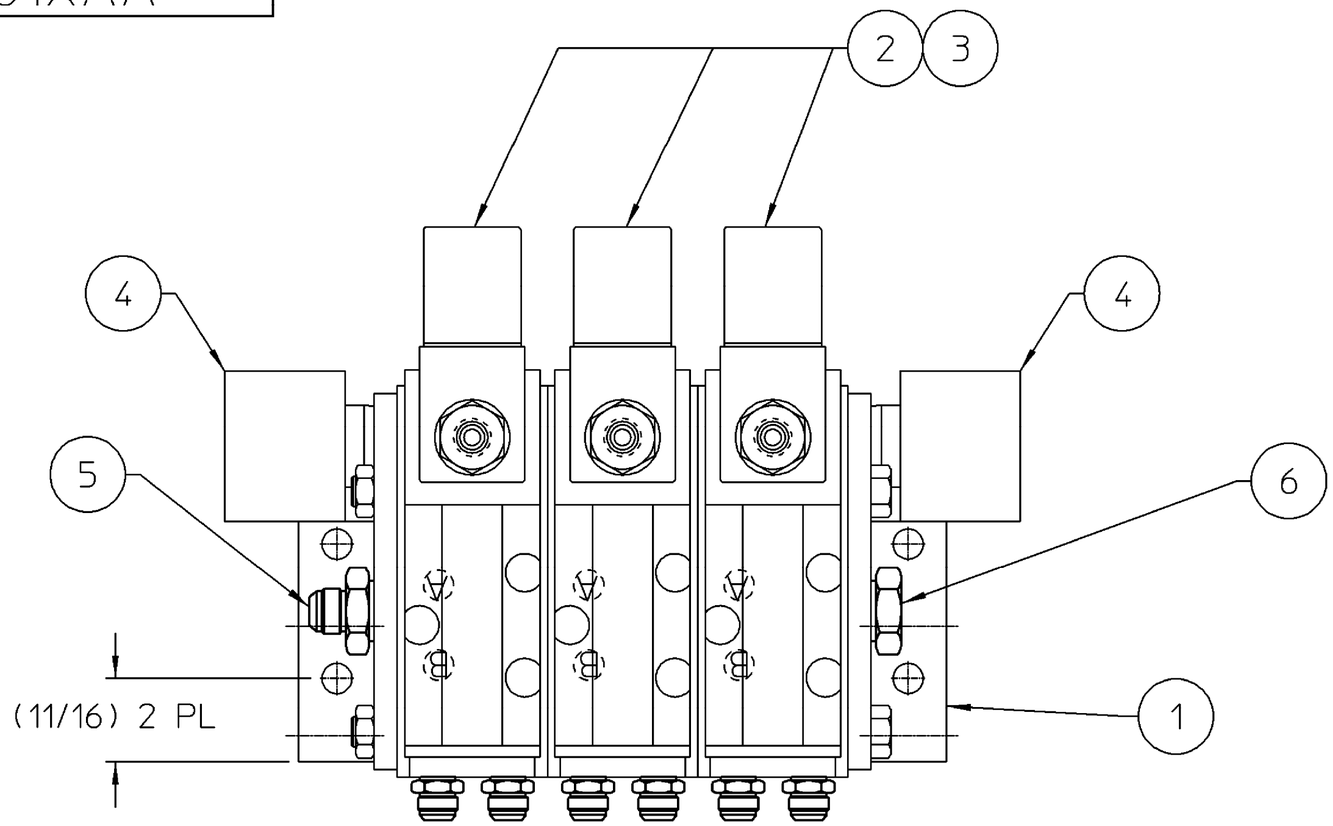

SECTION K-9

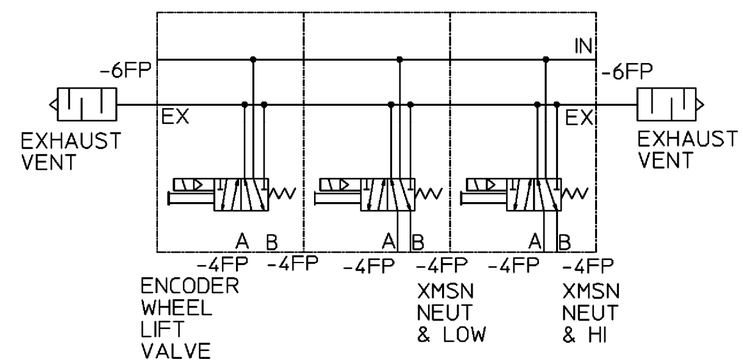

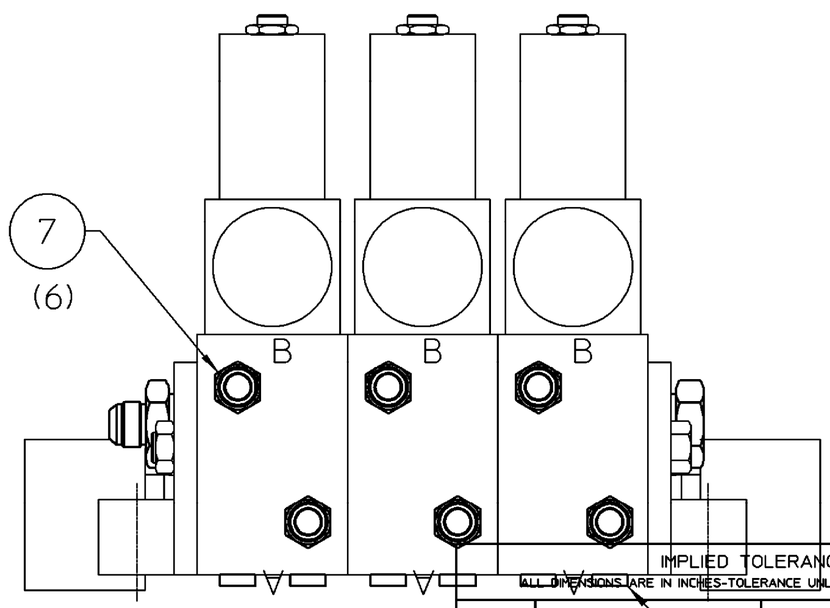

VALVE PARTS SEE D0391Y

FIG NO.	ITEM NO.	PART NUMBER	DESCRIPTION AND MATERIAL SIZE (REF.ONLY)	QTY
	8	0-3304118-0-11	PLUG HEX SOC. 1/4 NPT	6
	7	L411385	ADAPTER 1/4 MP - JIC	6
	6	L420110	3/8 MP HEX PLUG	1
	5	L411387	ADAPTER 3/8 MP - 1/4 JIC	1
	4	0-3350004-0-06	DUST EXCLUDER	2
	3	D0393Y02	VALVE SOL. 28 VDC	3
	2	0-3401000-0-05	MANIFOLD	3
	1	0-3401000-0-08	MOUNTING BRACKET	1

IMPLIED TOLERANCES
ALL DIMENSIONS ARE IN INCHES-TOLERANCE UNLESS OTHERWISE SPECIFIED

NOMINAL SIZE RANGE		PLUS OR MINUS			NOMINAL SIZE RANGE		PLUS OR MINUS		
OVER	TO	FRACTION	2 PLACE DECIMAL	3 PLACE DECIMAL	OVER	TO	FRACTION	2 PLACE DECIMAL	3 PLACE DECIMAL
-	1	1/64	.01	.003	6	24	3/64	.03	.008
1	6	1/32	.02	.005	24	-	1/16	.05	.010

ANGULAR DIMENSIONS PLUS OR MINUS 1 DEGREE

ALL MACHINED SURFACES TO HAVE A SURFACE FINISH OF 125 MICROINCHES UNLESS OTHERWISE SPECIFED.

WELDING SPECIFICATION

UNLESS OTHERWISE SPECIFIED ALL WELDS SHOULD ADHERE TO FAIRMONT TAMPER WELDING SPECIFICATION NO. 101

WEIGHT lbs.

3rd ANGLE PROJECTION

DO NOT SCALE

SHEET 1 CONT. ON –

DESCRIPTION (24
FRONT SHIFTER VALVE ASSY

DRAWN M TRIPPE	DATE 4/8/92	MACHINE TYPE MARK IV
CHECKED JA	DATE 1/5/93	
APP-ENG ADL	DATE 12/14/92	
APP-MFG	DATE	
LAST ECR. 7177. 6	CHECKED jgg	ENG.DWG.NO. C7781XAA
	DATE 26-Jun-95	

Fairmont Tamper™
2401 Edmund Road-Box 20
Cayce-West Columbia.
South Carolina 29171-0020
(803) 822-9160

THIS DOCUMENT CONTAINS PROPRIETARY INFORMATION AND SUCH INFORMATION MAY NOT BE DISCLOSED TO OTHERS FOR ANY PURPOSE OR USED FOR MANUFACTURING PURPOSES WITHOUT THE WRITTEN PERMISSION OF FAIRMONT TAMPER.

ENG.DWG.NO.
C7786XAA

REVISIONS							
NO	ER	DESCRIPTION	ZONE	DR	CK	APP	MF
1	5860.237	NEW RELEASE		MLT	JGA	ADL	
2	6583.1	ITEM 10 P/N WAS 0-3413005-0-12 ITEM 11 P/N WAS 0-3413005-0-17		MLT	JGA	ADL	

DETAIL "A"

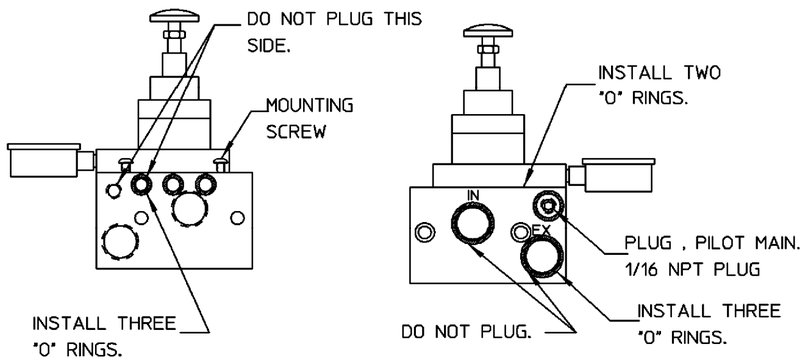

DETAIL "B"

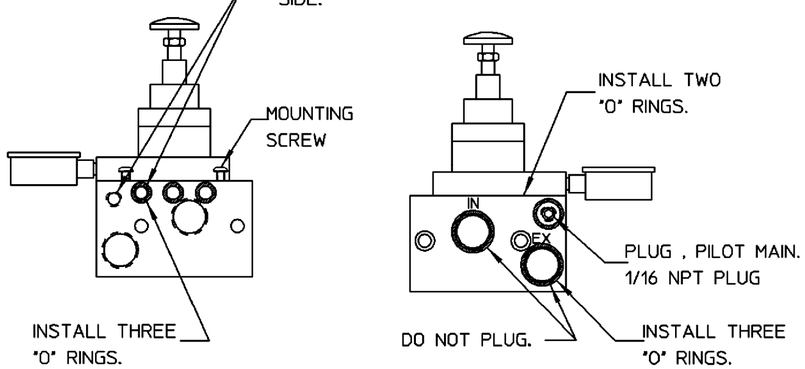

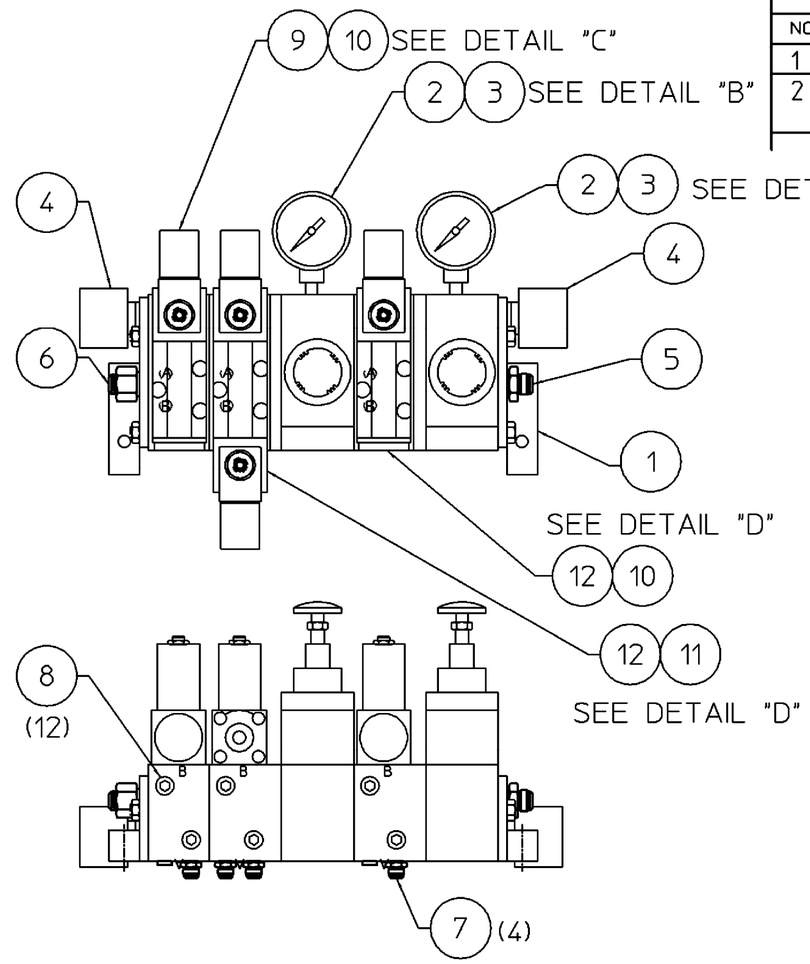

SECTION K-7

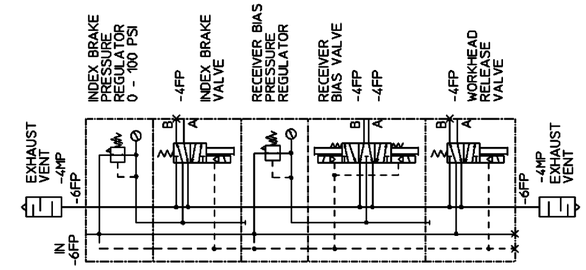

DETAIL "C"

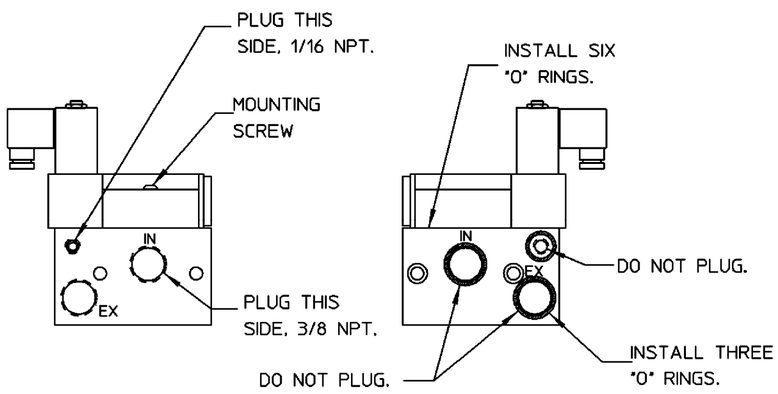

DETAIL "D"

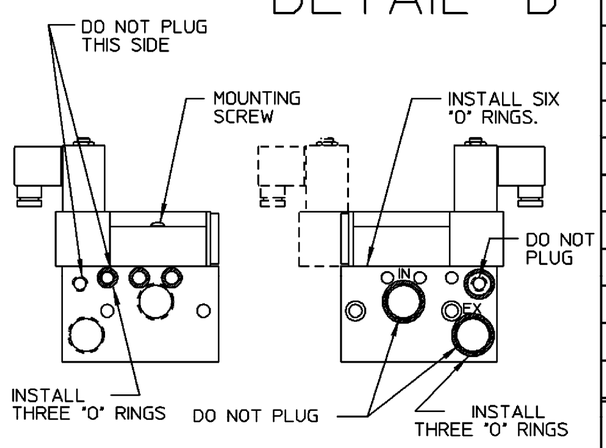

FIG NO.	ITEM NO.	PART NUMBER	DESCRIPTION AND MATERIAL SIZE (REF.ONLY)	QTY
	12	0-3401000-0-13	MANIFOLD	2
	11	D0393Y01	VALVE DBL. SOL. 28 VDC	1
	10	D0393Y03	VALVE SNGL. SOL. 28 VDC	2
	9	0-3401000-0-06	MANIFOLD	1
	8	0-3304118-0-11	PLUG HEX SOC. 1/4 NPT	8
	7	L411385	ADAPTER 1/4 MP - JIC	4
	6	A5443Y13	MALE CONNECTOR 3/8NPT-1/4TUBE	1
	5	L420114	ADAPTER 3/8 MP - JIC	1
	4	0-3350004-0-06	DUST EXCLUDER	2
	3	0-3413005-0-18	VALVE, PRESS. REGULATOR	2
	2	0-3401000-0-09	MANIFOLD, PRESS. REG.	2
	1	0-3401000-0-08	MOUNTING BRACKET	1

VALVE PARTS SEE D0391Y

IMPLIED TOLERANCES
ALL DIMENSIONS ARE IN INCHES-TOLERANCE UNLESS OTHERWISE SPECIFIED

NOMINAL SIZE RANGE		PLUS OR MINUS			NOMINAL SIZE RANGE		PLUS OR MINUS		
OVER	TO	FRACTION	2 PLACE DECIMAL	3 PLACE DECIMAL	OVER	TO	FRACTION	2 PLACE DECIMAL	3 PLACE DECIMAL
-	1	1/64	.01	.003	6	24	3/64	.03	.008
1	6	1/32	.02	.005	24	-	1/16	.05	.010

ANGULAR DIMENSIONS PLUS OR MINUS 1 DEGREE

√ ALL MACHINED SURFACES TO HAVE A SURFACE FINISH OF 125 MICROINCHES UNLESS OTHERWISE SPECIFED.

WELDING SPECIFICATION

UNLESS OTHERWISE SPECIFIED ALL WELDS SHOULD ADHERE TO FAIRMONT TAMPER WELDING SPECIFICATION NO. 101

WEIGHT 2.5 lbs.

3rd ANGLE PROJECTION

DO NOT SCALE

SHEET 1 CONT. ON –

DESCRIPTION (24
INDEX BRAKE VALVE ASSY

DRAWN MLT	DATE 08/25/92	MACHINE TYPE MKIV(STD)/MKVI(THAI)
CHECKED JGA	DATE 01/05/93	
APP-ENG ADL	DATE 12/19/92	
APP-MFG	DATE	
LAST ECR. 6583.1	CHECKED jga	ENG.DWG.NO. C7786XAA
	DATE 22-Mar-95	

Fairmont Tamper™
2401 Edmund Road-Box 20
Cayce-West Columbia,
South Carolina 29171-0020
(803) 822-9160

THIS DOCUMENT CONTAINS PROPRIETARY INFORMATION AND SUCH INFORMATION MAY NOT BE DISCLOSED TO OTHERS FOR ANY PURPOSE OR USED FOR MANUFACTURING PURPOSES WITHOUT THE WRITTEN PERMISSION OF FAIRMONT TAMPER.

ENG.DWG.NO.
C7788XAA

REVISIONS							
NO	ER	DESCRIPTION	ZONE	DR	CK	APP	MF
1	5860.237	NEW RELEASE		MLT	JGA	APD	
2	6583.1	ITEM 3 WAS 0-3413005-0-12 & ITEM 10 WAS 0-3413005-0-17		MLT	JGA	APD	
3	11711.53	ITEM 6 P/N WAS L411387		LES	HWJ	AML	

DETAIL "A"

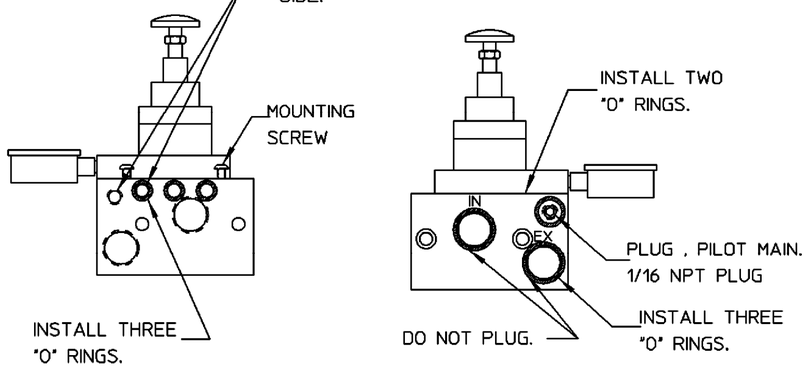

DETAIL "B"

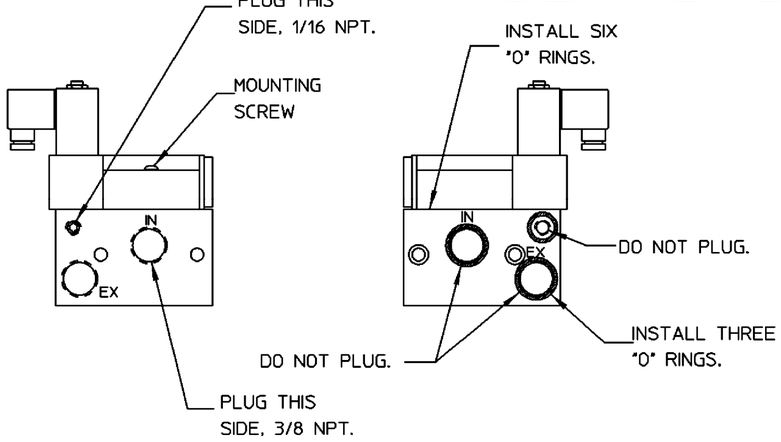

DETAIL "C"

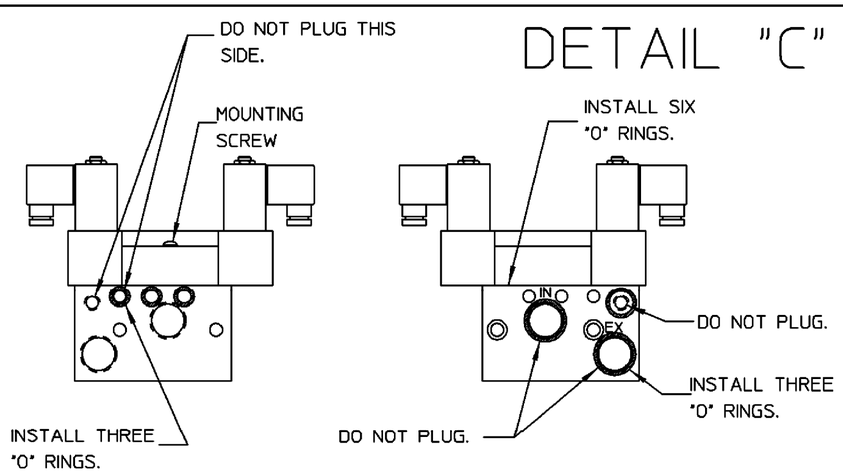

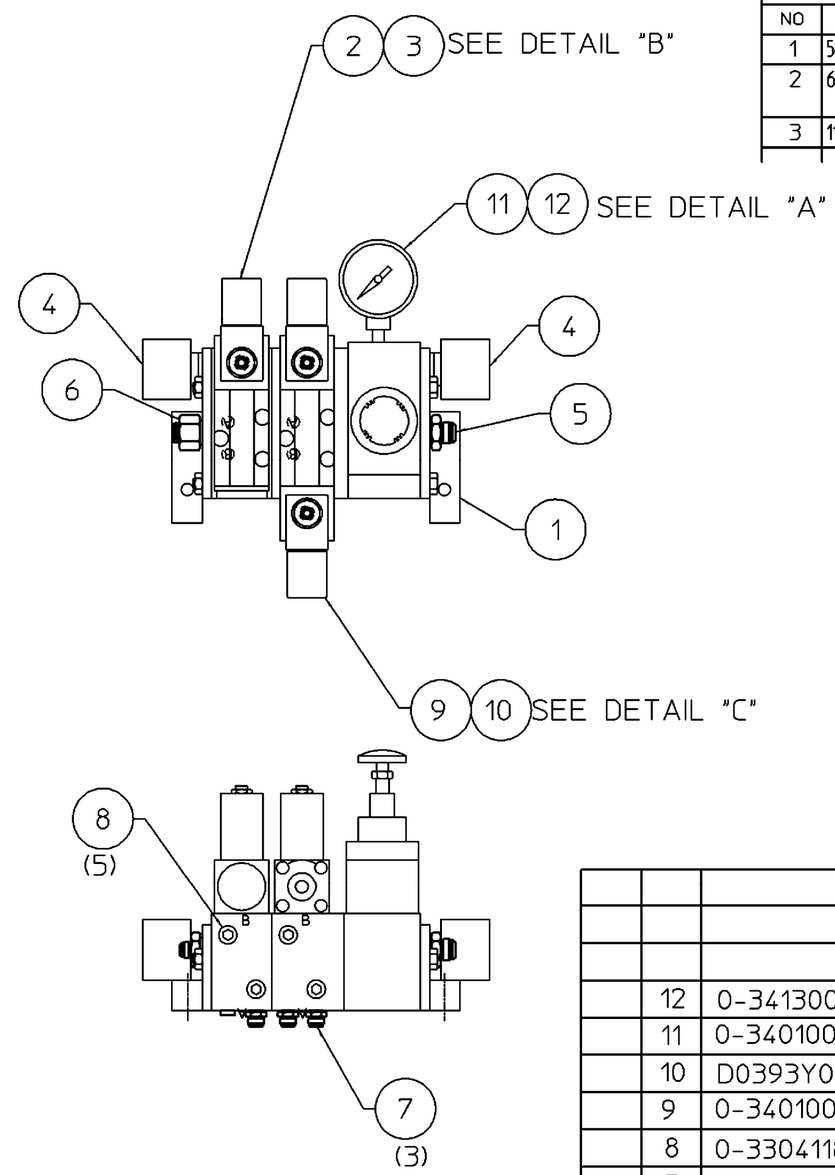

'L411387
'3/8 MP/ 1/4 JIC STR ADAPTER'
'AEROQUIP #2021-6-4S'

A5443Y13
PRESTOLOK FITTING MALE CONECTOR 1/4 TUBE SIZE - 3/8 NPTF PIPE THREAD'
'PARKER P/N 68PL-4-6 *** CORONET P/N 768-4-6'

VALVE PARTS SEE D0391Y

SECTION K-6

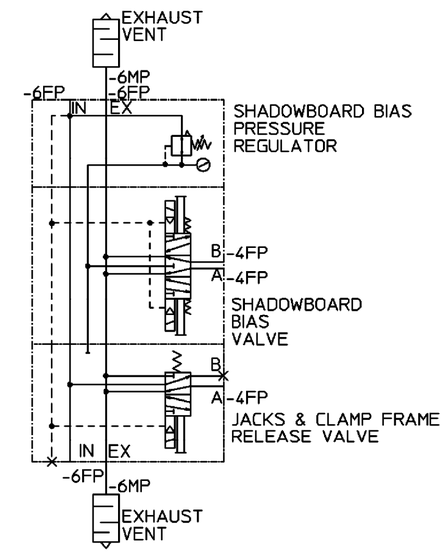

FIG NO.	ITEM NO.	PART NUMBER	DESCRIPTION AND MATERIAL SIZE (REF.ONLY)	QTY
	12	0-3413005-0-18	PRESS REGULATOR VALVE	1
	11	0-3401000-0-09	MANIFOLD, PRESS. REG.	1
	10	D0393Y01	VALVE DBL. SOL. 28 VDC	1
	9	0-3401000-0-13	MANIFOLD	1
	8	0-3304118-0-11	PLUG HEX SOC. 1/4 NPT	5
	7	L411385	ADAPTER 1/4 MP - JIC	3
	6	A5443Y13	ADAPTER 3/8 MP - 1/4 PRESTOLOCK	1
	5	L420114	ADAPTER 3/8 MP - JIC	1
	4	0-3350004-0-06	DUST EXCLUDER	2
	3	D0393Y03	VALVE SOL. 28 VDC	1
	2	0-3401000-0-06	MANIFOLD	1
	1	0-3401000-0-08	MOUNTING BRACKET	1

IMPLIED TOLERANCES
ALL DIMENSIONS ARE IN INCHES-TOLERANCE UNLESS OTHERWISE SPECIFIED

NOMINAL SIZE RANGE		PLUS OR MINUS			NOMINAL SIZE RANGE		PLUS OR MINUS		
OVER	TO	FRACTION	2 PLACE DECIMAL	3 PLACE DECIMAL	OVER	TO	FRACTION	2 PLACE DECIMAL	3 PLACE DECIMAL
-	1	1/64	.01	.003	6	24	3/64	.03	.008
1	6	1/32	.02	.005	24	-	1/16	.05	.010

ANGULAR DIMENSIONS PLUS OR MINUS 1 DEGREE

√ ALL MACHINED SURFACES TO HAVE A SURFACE FINISH OF 125 MICROINCHES UNLESS OTHERWISE SPECIFIED.

WELDING SPECIFICATION

UNLESS OTHERWISE SPECIFIED ALL WELDS SHOULD ADHERE TO FAIRMONT TAMPER WELDING SPECIFICATION NO. 101

WEIGHT 2.5X lbs.

3rd ANGLE PROJECTION

DO NOT SCALE

SHEET 1 CONT. ON –

DESCRIPTION (24
SHADOWBOARD VALVE ASSY

DRAWN MLT	DATE 8/25/92	MACHINE TYPE MARK IV	
CHECKED JGA	DATE 01/5/93		
APP-ENG APD	DATE 12/19/92	Fairmont Tamper™ 2401 Edmund Road-Box 20 Cayce-West Columbia, South Carolina 29171-0020 (803) 822-9160	
APP-MFG	DATE		
LAST ECR. 11711.53	CHECKED hwj	ENG.DWG.NO. C7788XAA	
	DATE 11-Sep-00		

THIS DOCUMENT CONTAINS PROPRIETARY INFORMATION AND SUCH INFORMATION MAY NOT BE DISCLOSED TO OTHERS FOR ANY PURPOSE OR USED FOR MANUFACTURING PURPOSES WITHOUT THE WRITTEN PERMISSION OF FAIRMONT TAMPER.

ENG.DWG.NO.
C9416YAA

USE EXISTING
SENDER & FITTING

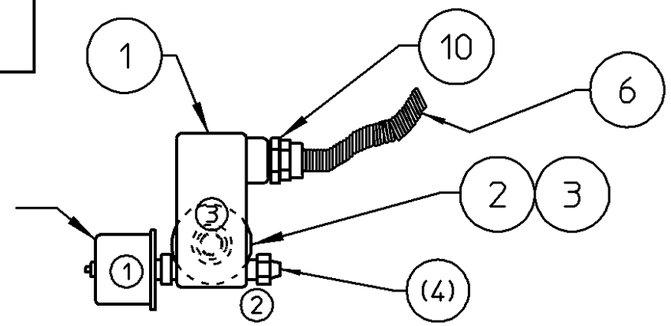

DETAIL - A

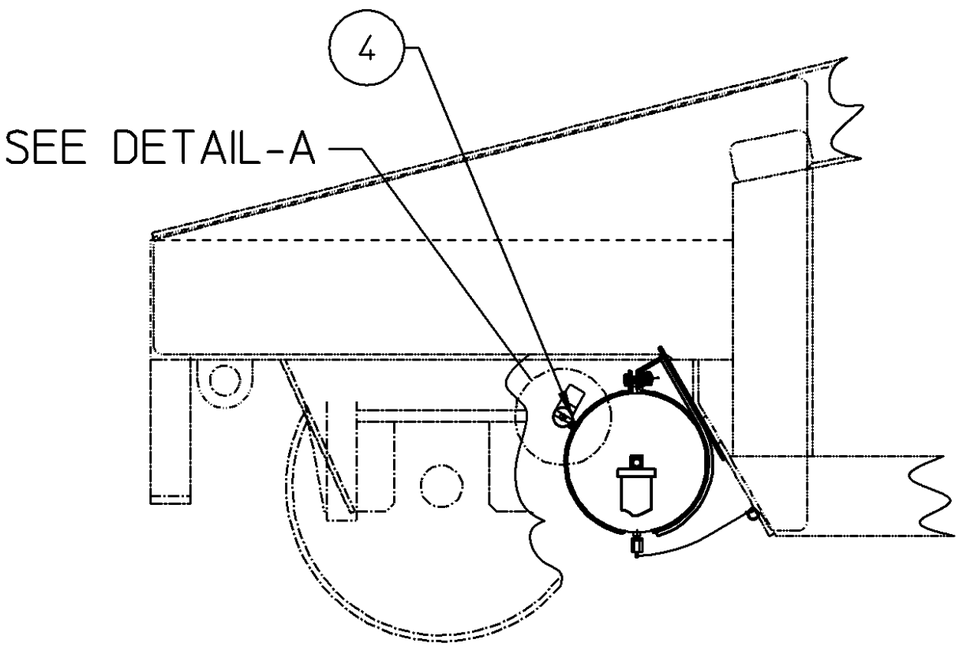

REVISIONS							
NO	ER	DESCRIPTION	ZONE	DR	CK	APP	MF
1	5860.265	RELEASED					
2	10377.1	REV'D DETAIL A, ITS 2&3 WERE CONNECTED TO PORT 2 OF IT 1.	PJG	HW	JBR		
3	11814	REV'D WIRING DIAG. DEL IT'S 5, 7, 8, 9, & 11. DEL NOTES 1 & 2. ADD CABLE CONSTRUCTION CHART. ADD IT'S 12 & 13. IT 6 QTY WAS 7.	EP	DGV	MSL		

FIG NO.	ITEM NO.	PART NUMBER	DESCRIPTION AND MATERIAL SIZE (REF.ONLY)	QTY
	13	L411089	CABLE 16/2 TYPE SO	35
	12	L424087	1/2 IN 90° STRAIN RELIEF	1
	~~11~~	~~A2338Y14~~	~~SHRINK TUBE (FT)~~	~~.25~~
	10	L410970	1/2" STRAIN RELIEF (.3-.4)	1
	~~9~~	~~L41580~~	~~5 AMP FUSE~~	~~1~~
	~~8~~	~~L425024~~	~~IN-LINE FUSE HOLDER~~	~~1~~
	~~7~~	~~A9297Y03~~	~~#16 GA. WIRE (FT)~~	~~14~~
	6	B1623Y01	1/4" CORR. CONDUIT (FT)	1
	~~5~~	~~L422499~~	~~RING LUG~~	~~1~~
	4	L41079	ADAPTER 1/4 MP-1/4 MP	1
	3	0-3350004-0-06	EXHAUST VENT	1
	2	L426252	ADAPTER 1/4 MP-3/8 FP	1
	1	0-3413003-0-15	AIR VALVE	1

CABLE CONSTRUCTION CHART							
		BOX END		DEVICE END		CABLE	
CABLE NO.	WIRE NOS.	ITEM(QTY)	OUTER INSL STRIP (INCHES)	ITEM(QTY)	OUTER INSL STRIP (INCHES)	ITEM (QTY) (FEET)	CABLE P/N
CL1182	279, 000	12 (1)	24	N/A	3	13 (35)	C9416YAACL1182

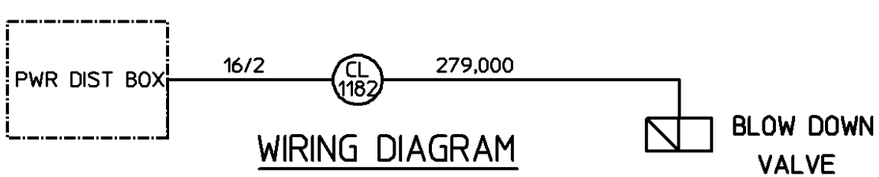

WIRING DIAGRAM

IMPLIED TOLERANCES
ALL DIMENSIONS ARE IN INCHES-TOLERANCE UNLESS OTHERWISE SPECIFIED

NOMINAL SIZE RANGE		PLUS OR MINUS			NOMINAL SIZE RANGE		PLUS OR MINUS		
OVER	TO	FRACTION	2 PLACE DECIMAL	3 PLACE DECIMAL	OVER	TO	FRACTION	2 PLACE DECIMAL	3 PLACE DECIMAL
-	1	1/64	.01	.003	6	24	3/64	.03	.008
1	6	1/32	.02	.005	24	-	1/16	.05	.010

AUGULAR DIMENSIONS PLUS OR MINUS 1 DEGREE

√ ALL MACHINED SURFACES TO HAVE A SURFACE FINISH OF 125 MICRONCHES UNLESS OTHERWISE SPECIFED.

WEIGHT lbs.

3rd ANGLE PROJECTION

DO NOT SCALE

WELDING SPECIFICATION
UNLESS OTHERWISE SPECIFIED ALL WELDS SHOULD ADHERE TO FAIRMONT TAMPER WELDING SPECIFICATION 101

DESCRIPTION (24)
AIR AUTO BLOW DOWN KIT

DRAWN M TRIPPE	DATE 2/4/93	MACHINE TYPE MARK IV
CHECKED DGV	DATE 2/11/93	
APP-ENG TD	DATE 2/11/93	
SHEET 1	CONT. — ON	
LAST ECR. 11814 .1	CHECKED dvan	ENG.DWG.NO. C9416YAA
	DATE 22-Sep-99	

Fairmont Tamper™
2401 Edmund Road-Box 20
Cayce-West Columbia,
South Carolina 29171-0020
(803) 822-9160

Item Number	Part Number	Description	Quantity
1	48956101	AIR DE-ICER	1
2	F024497	ADAPTER	2
3	0-3305024-0-21	3/4 UNION ADAPTER	2
4	0-3305023-0-01	HYD LINE CLAMP 3" SERIES	4
5	0-3305024-0-18	STACKING NUT 3/8 BOLT	4
6	40061C1	3/8 HEAVY LOCK WASHER	8
7	40036063	3/8-16 X 1" -HCS GR5	8

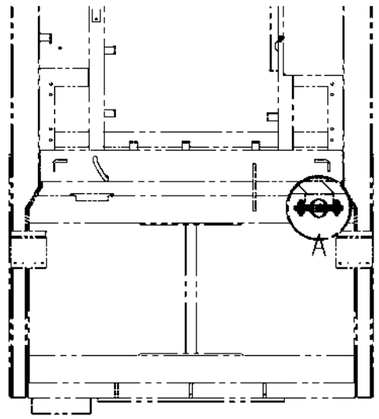

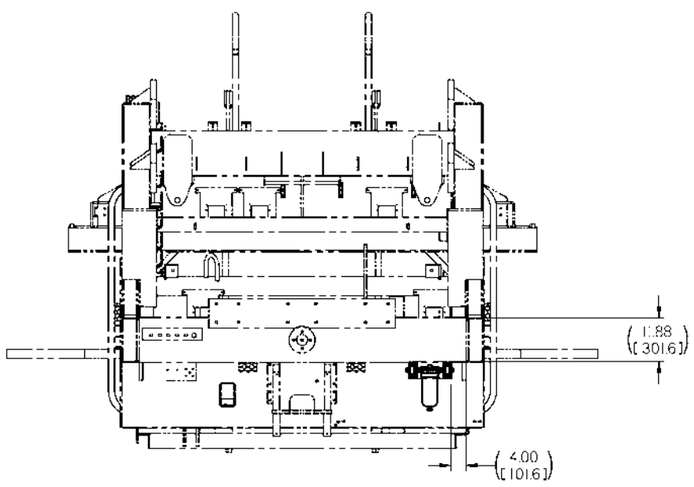

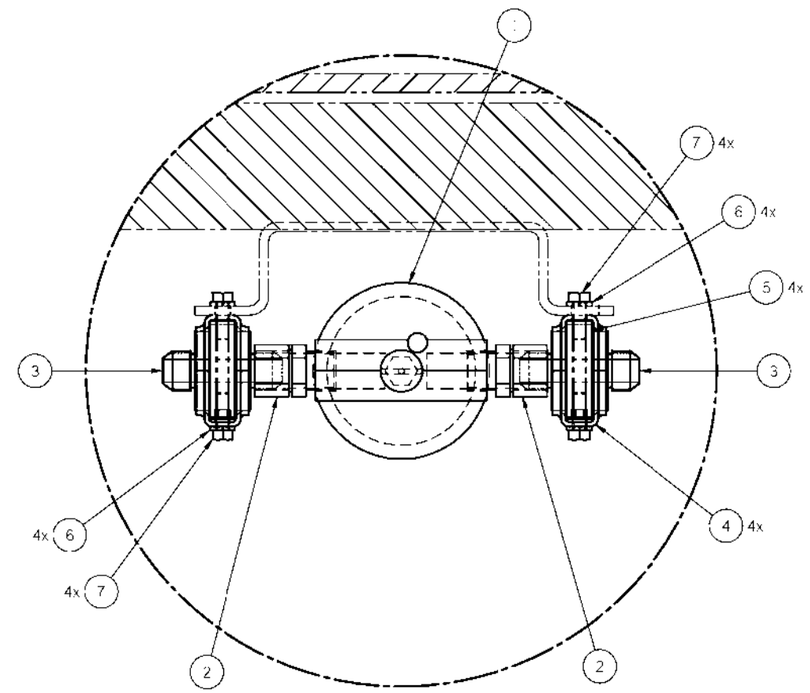

DETAIL A

SOLID EDGE DRAWING

CONFIDENTIAL
© COPYRIGHT 2001 HARSCO TRACK TECHNOLOGIES. THIS DRAWING OR DOCUMENT IS THE PROPERTY OF HARSCO TRACK TECHNOLOGIES AND EMBODIES CONFIDENTIAL INFORMATION, TRADE SECRET INFORMATION AND OR KNOW HOW THAT IS THE PROPERTY OF HARSCO TRACK TECHNOLOGIES. BY ACCEPTING THIS DRAWING OR DOCUMENT THE RECIPIENT AGREES (1) NOT TO PROVIDE OR OTHERWISE MAKE AVAILABLE THE DRAWING OR DOCUMENT OR ANY INFORMATION OR KNOW HOW PROVIDED THEREIN TO ANY THIRD PARTY AND (2) NOT TO REPRODUCE OR USE THE DRAWING OR DOCUMENT TO MANUFACTURE ANY APPARATUS OR DEVICE WITHOUT THE PRIOR WRITTEN AUTHORIZATION OF HARSCO TRACK TECHNOLOGIES.

UNLESS OTHERWISE SPECIFIED
ENGLISH | METRIC
UNCLEAN SURFACES WILL WAVE

CHANGE	REL	REVISION	DATE

DESCRIPTION: DE-ICER INSTALLATION
DRAWING NUMBER: ----------
MARK IV
DRAWN: 4021224.asm
BY: bbrunson 3-30-09
42.5 lbm | 1:4 | HW | HW
CLIENT:

HTT
Harsco Track Technologies
Harsco
Columbia, SC

4021224 D

Plotted by bbrunson on 3/30/2009 4021224.dft

CONFIDENTIAL

© COPYRIGHT 2001 HARSCO TRACK TECHNOLOGIES. THIS DRAWING OR DOCUMENT IS THE PROPERTY OF HARSCO TRACK TECHNOLOGIES AND EMBODIES CONFIDENTIAL INFORMATION, TRADE SECRET INFORMATION, AND/OR KNOW-HOW THAT IS THE PROPERTY OF HARSCO TRACK TECHNOLOGIES. BY ACCEPTING THIS DRAWING OR DOCUMENT, THE RECIPIENT AGREES (1) NOT TO PROVIDE, OR OTHERWISE MAKE AVAILABLE, THE DRAWING OR DOCUMENT, OR ANY INFORMATION OR KNOW-HOW EMBODIED THEREIN, TO ANY THIRD PARTY AND (2) NOT TO REPRODUCE OR USE THE DRAWING OR DOCUMENT TO MANUFACTURE ANY APPARATUS OR DEVICE, WITHOUT THE PRIOR WRITTEN AUTHORIZATION OF HARSCO TRACK TECHNOLOGIES.

SOLID EDGE DRAWING

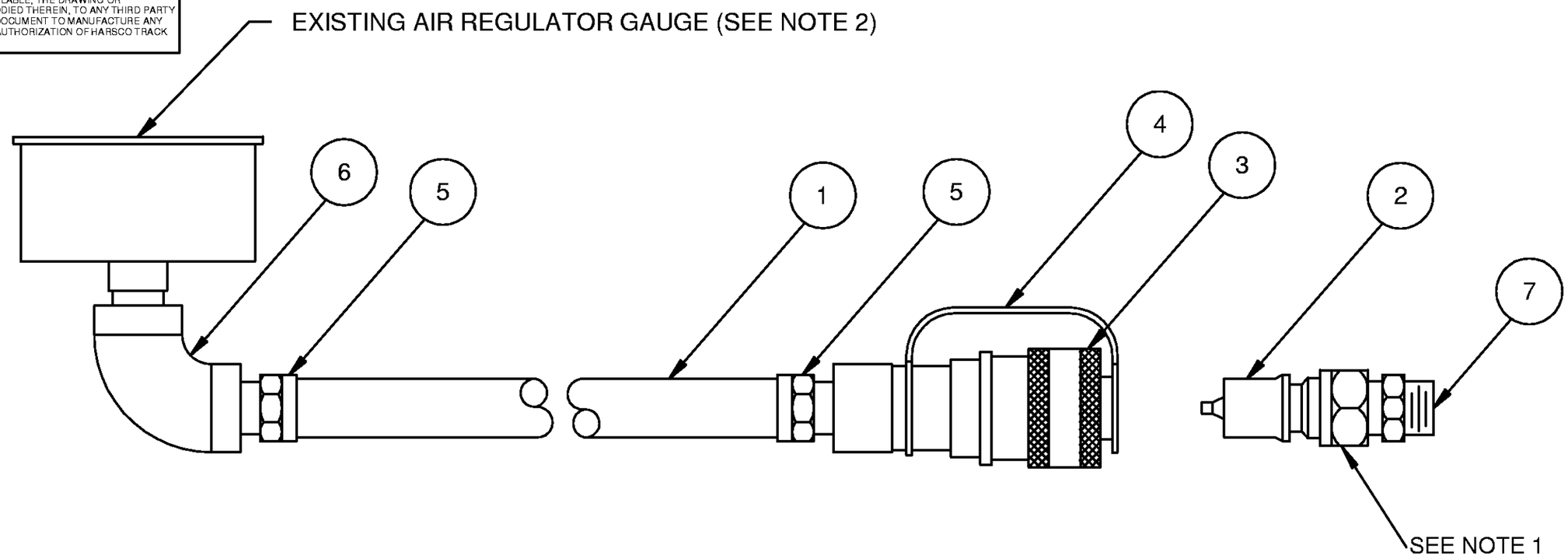

NOTES:

1. REMOVE AIR GAUGE FROM REGULATORS USED ON RECEIVER BIAS, INDEX BRAKE, SHADOWBOARD BIAS, SHADOWBOARD DOWN, PROJECTOR BIAS, RVDT BIAS, PAINT POT & HORN. THEN INSTALL ITEMS 2 & 7 IN PLACE OF EACH AIR GAUGE.
2. USE ONE OF EXISTING AIR REGULATOR GAUGES TO ASSEMBLE AIR PRESSURE TEST UNIT.

ITEM	PART NUMBER	DESCRIPTION	QTY
1	L423094	HOSE, 1/4 LP	1
2	L41228	PLUG, QUICK COUPLING	10
3	L41227	COUPLING, QUICK -4 SOCKET	1
4	0-3304086-0-17	DUST COVER	1
5	L423096	FITTING	2
6	F014532	DC-ELB90 4FPTX4FPT	1
7	L423299	MP/MP REDUCING NIPPLE	10

IMPLIED TOLERANCES

ALL DIMENSIONS ARE IN INCHES - TOLERANCE UNLESS OTHERWISE SPECIFIED

NOMINAL SIZE RANGE		INCH PLUS OR MINUS		NOMINAL SIZE RANGE		METRIC PLUS OR MINUS	
OVER	TO	2 PLACE DECIMAL	3 PLACE DECIMAL	OVER	TO	1 PLACE DECIMAL	2 PLACE DECIMAL
0	6	.03	.005	0	150	.8	.13
6	24	.04	.008	150	600	1.0	.20
24	-	.06	.010	-	600	1.5	.25

UNLESS OTHERWISE SPECIFIED ALL MACHINED SURFACES WILL HAVE;
A SURFACE FINISH OF 125 MICROINCHES
ANGULAR TOLERANCE OF ± .50°
CONCENTRICITY WITHIN .010

THIRD ANGLE PROJECTION

UNLESS OTHERWISE SPECIFIED ALL WELDS SHOULD ADHERE TO THE LATEST HTT WELDING SPECIFICATION 101

CHANGE	R/L	REVISION	DATE
8678.41	A	RELEASE	2-18-97
101913	B	IT-2 QTY WAS 1, IT-3 & 4 QTY WAS 10; PITCTROIAL UPDATE	7-18-08

Description: AIR PRESSURE TEST UNIT

Drawing Number: ----------

Machine Type: MARK VI

Model: B5370XAD.dft

Drawn: hwiggins

Date Drawn: 7-18-08

Weight: ----------

Scale: 1:4

APVD Desg: JBR

APVD ChEng: JBR

Mat'l: ----------

HTT
Harsco Track Technologies
Harsco
Columbia, SC

Part Number: B5370XAD

Size: B

Sheet: 1 of 1

Plotted by hwiggins on 8/5/2008 B5370XAD.dft

ENG.DWG.NO.
D2708XAA

REVISIONS							
NO	ER	DESCRIPTION	ZONE	DR	CK	APP	MF
1		NEW RELEASE					

NOTES:
1.REMOVE EXISTING FITTING FROM AIR FILTER & REPLACE WITH ITEM 1.

SECTION KO-0912

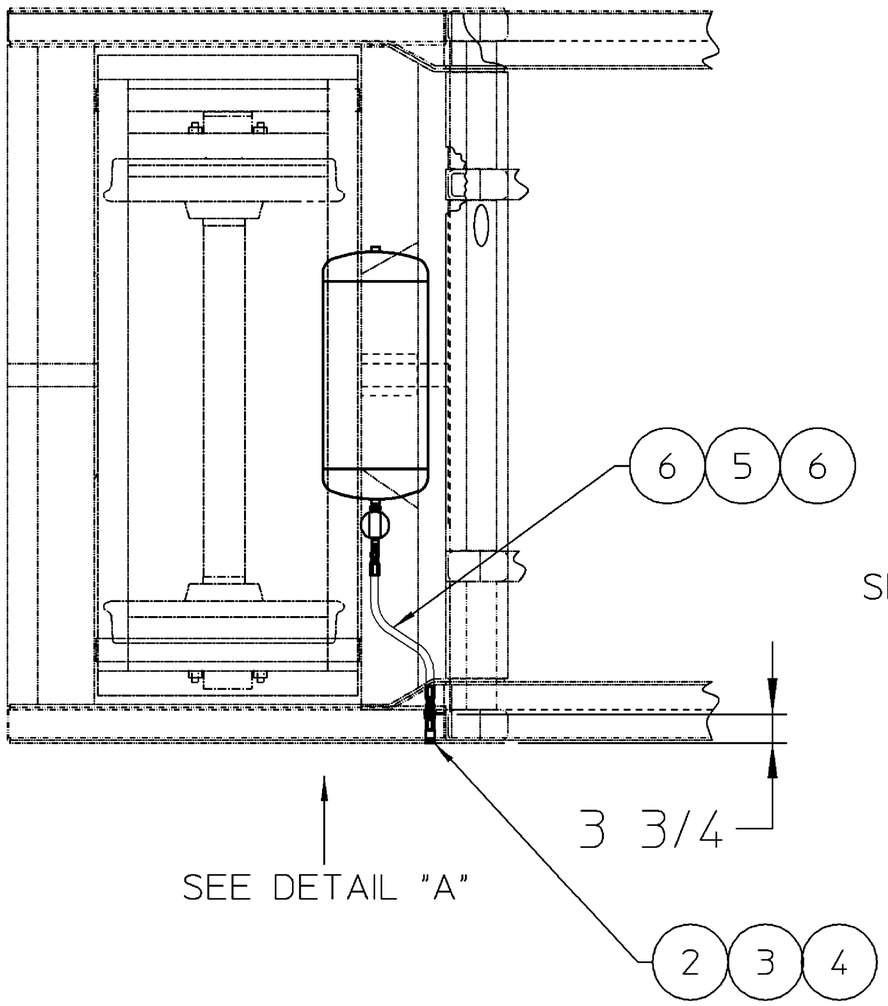

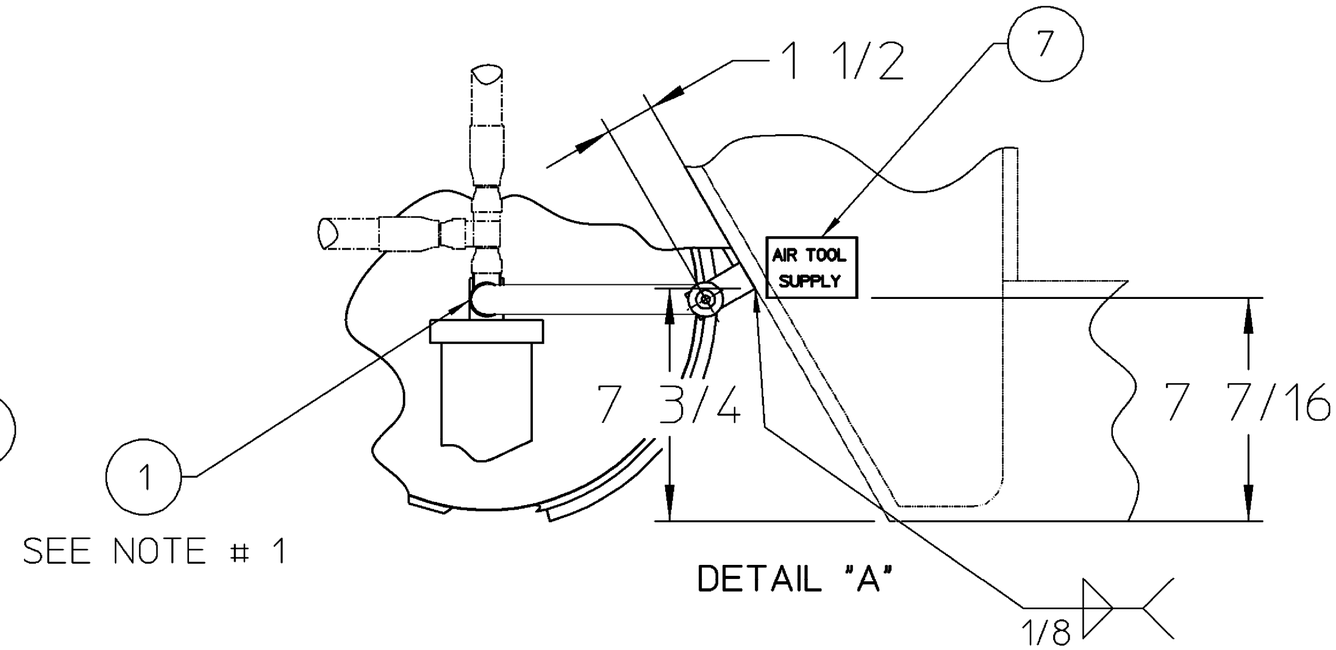

DETAIL "A"

FIG NO.	ITEM NO.	PART NUMBER	DESCRIPTION AND MATERIAL SIZE (REF.ONLY)	QTY
	7	D2746Y01	NAMEPLATE	1
	6	L411361	AIR BRAKE HOSE FITTING JIC SW 1/2	2
	5	0-3305003-0-03	AIR BRAKE HOSE 1/2 FT	3
	4	A0213T78	EYE - 3/8 THICK	1
	3	0-3304195-0-04	ADAPTER 1/2 FP-JIC BULKHEAD	1
	2	0-3420005-0-01	QUICK COUPLING 1/2	1
	1	0-3304101-0-10	TEE 1/2 MP-JIC-JIC	1

IMPLIED TOLERANCES
ALL DIMENSIONS ARE IN INCHES-TOLERANCE UNLESS OTHERWISE SPECIFIED

NOMINAL SIZE RANGE		PLUS OR MINUS			NOMINAL SIZE RANGE		PLUS OR MINUS		
OVER	TO	FRACTION	2 PLACE DECIMAL	3 PLACE DECIMAL	OVER	TO	FRACTION	2 PLACE DECIMAL	3 PLACE DECIMAL
-	1	1/64	.01	.003	6	24	3/64	.03	.008
1	6	1/32	.02	.005	24	-	1/16	.05	.010

ANGULAR DIMENSIONS PLUS OR MINUS 1 DEGREE

√ ALL MACHINED SURFACES TO HAVE A SURFACE FINISH OF 125 MICROINCHES UNLESS OTHERWISE SPECIFED.

WELDING SPECIFICATION

UNLESS OTHERWISE SPECIFIED ALL WELDS SHOULD ADHERE TO FAIRMONT TAMPER WELDING SPECIFICATION NO. 101

WEIGHT lbs.

3rd ANGLE PROJECTION

DO NOT SCALE 16

SHEET 1 CONT. ON –

DESCRIPTION (24
AIR TOOL SUPPLY KIT

DRAWN	DATE	MACHINE TYPE
M TRIPPE	2/10/94	MARK IV
CHECKED	DATE	
APP-ENG	DATE	
APP-MFG	DATE	
LAST ECR. 6745. 12	CHECKED dvan DATE 21-Feb-94	ENG.DWG.NO. D2708XAA

Fairmont Tamper™
2401 Edmund Road-Box 20
Cayce-West Columbia,
South Carolina 29171-0020
(803) 822-9160

THIS DOCUMENT CONTAINS PROPRIETARY INFORMATION AND SUCH INFORMATION MAY NOT BE DISCLOSED TO OTHERS FOR ANY PURPOSE OR USED FOR MANUFACTURING PURPOSES WITHOUT THE WRITTEN PERMISSION OF FAIRMONT TAMPER.

ITEM	PART NO	DISC	QTY
10	3400894	PRESSURE TRANSDUCER, 200	2
20	F024731	DC-STR -4FSX4NPT	2
30	F011079	DC-STR 6MPX4FPT	2
40	3401327	CABLE ASSEMBLY, M12, M/F, 5 ME	1
50	3401326	CABLE ASSEMBLY, M12, M/F, 3 ME	1
60	4019171	CABLE SLEEVE	4

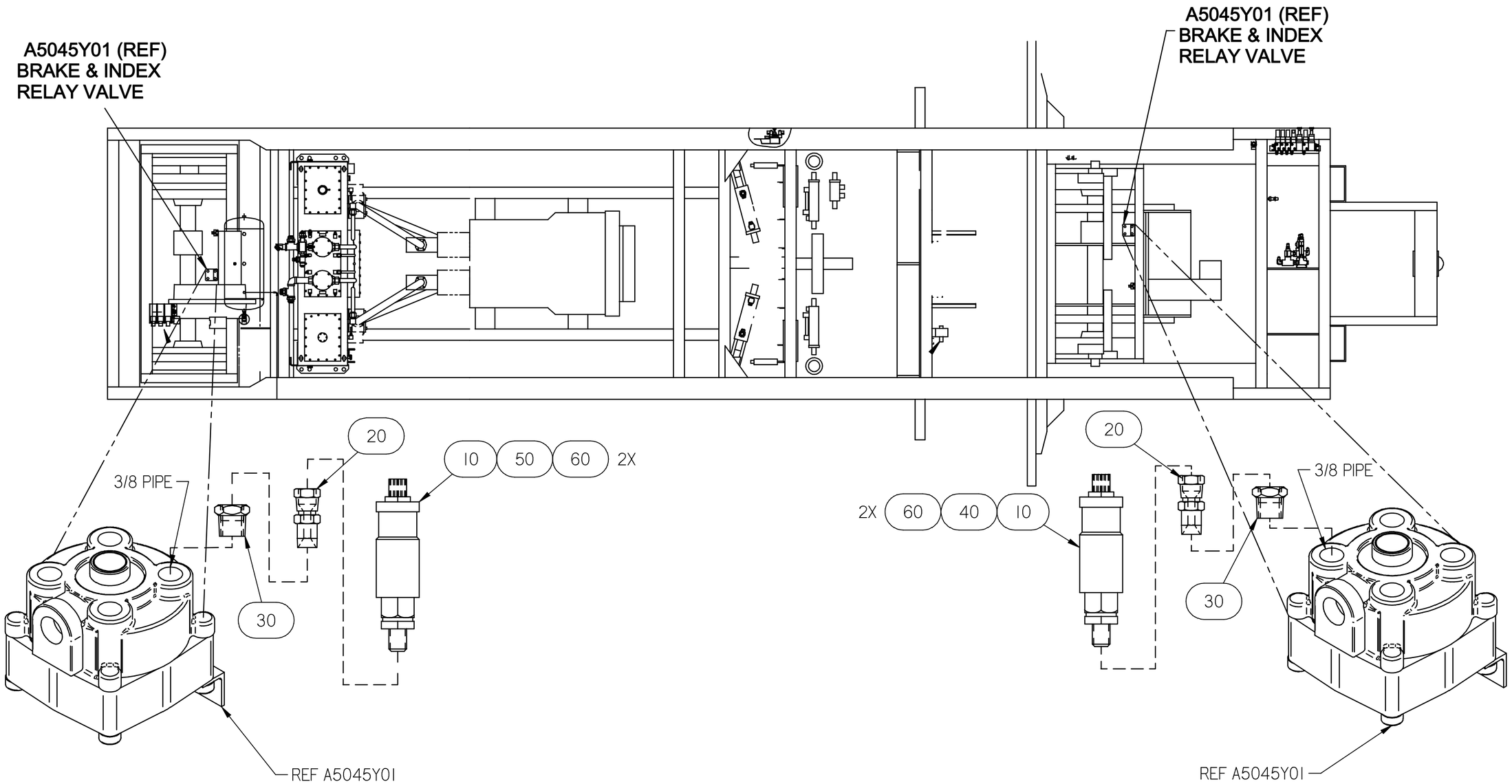

Inch
[mm]

CONFIDENTIAL
© COPYRIGHT 2011 HARSCO. THIS DRAWING OR DOCUMENT IS THE PROPERTY OF HARSCO AND EMBODIES CONFIDENTIAL INFORMATION, TRADE SECRET INFORMATION, AND/OR KNOW-HOW THAT IS THE PROPERTY OF HARSCO. BY ACCEPTING THIS DRAWING OR DOCUMENT, THE RECIPIENT AGREES (1) NOT TO PROVIDE, OR OTHERWISE MAKE AVAILABLE, THE DRAWING OR DOCUMENT, OR ANY INFORMATION OR KNOW-HOW EMBODIED THEREIN, TO ANY THIRD PARTY AND (2) NOT TO REPRODUCE OR USE THE DRAWING OR DOCUMENT TO MANUFACTURE ANY APPARATUS OR DEVICE, WITHOUT THE PRIOR WRITTEN AUTHORIZATION OF HARSCO.

NOMINAL SIZE RANGE		INCH PLUS OR MINUS		NOMINAL SIZE RANGE		METRIC PLUS OR MINUS	
OVER	TO	2 PLACE DECIMAL	3 PLACE DECIMAL	OVER	TO	1 PLACE DECIMAL	2 PLACE DECIMAL
0	6	.03	.005	0	150	.8	.13
6	24	.04	.008	150	600	1.0	.20
24	-	.06	.010	600	-	1.5	.25

UNLESS OTHERWISE SPECIFIED ALL MACHINED SURFACES WILL HAVE;
A SURFACE FINISH OF 125 MICROINCHES
ANGULAR TOLERANCE OF ± .50°
CONCENTRICITY WITHIN .010

THIRD ANGLE PROJECTION

UNLESS OTHERWISE SPECIFIED, ALL WELDS SHOULD ADHERE TO THE MOST CURRENT A.W.S WELDING STANDARDS

CHANGE	R/L	REVISION	DR	DATE
EC500931	A	RELEASE	BPA	4/18/11
EC501098	B	ADDED 40-60	BPA	5/10/11

Description: BRAKE PRESSURE TRANSDUCER KIT

HARSCO RAIL

Material: -; -

Machine Type: MARK IV

Size: C

Weight: 11.8 lbm

Drawn: badler

Date Drawn: 4/18/2011

Part Number: 5007803

Sheet: 1 of 1

SOLID EDGE DRAWING

DO NOT SCALE

ENG.DWG.NO.
G1522XAA

REVISIONS							
NO	ER	DESCRIPTION	ZONE	DR	CK	APP	MF
1	8615.2	NEW RELEASE		DAH			
2	10352	IT 1 WAS L41228, ADDED ITEMS 5 & 6 & REVISED NOTE 1.		PJG			

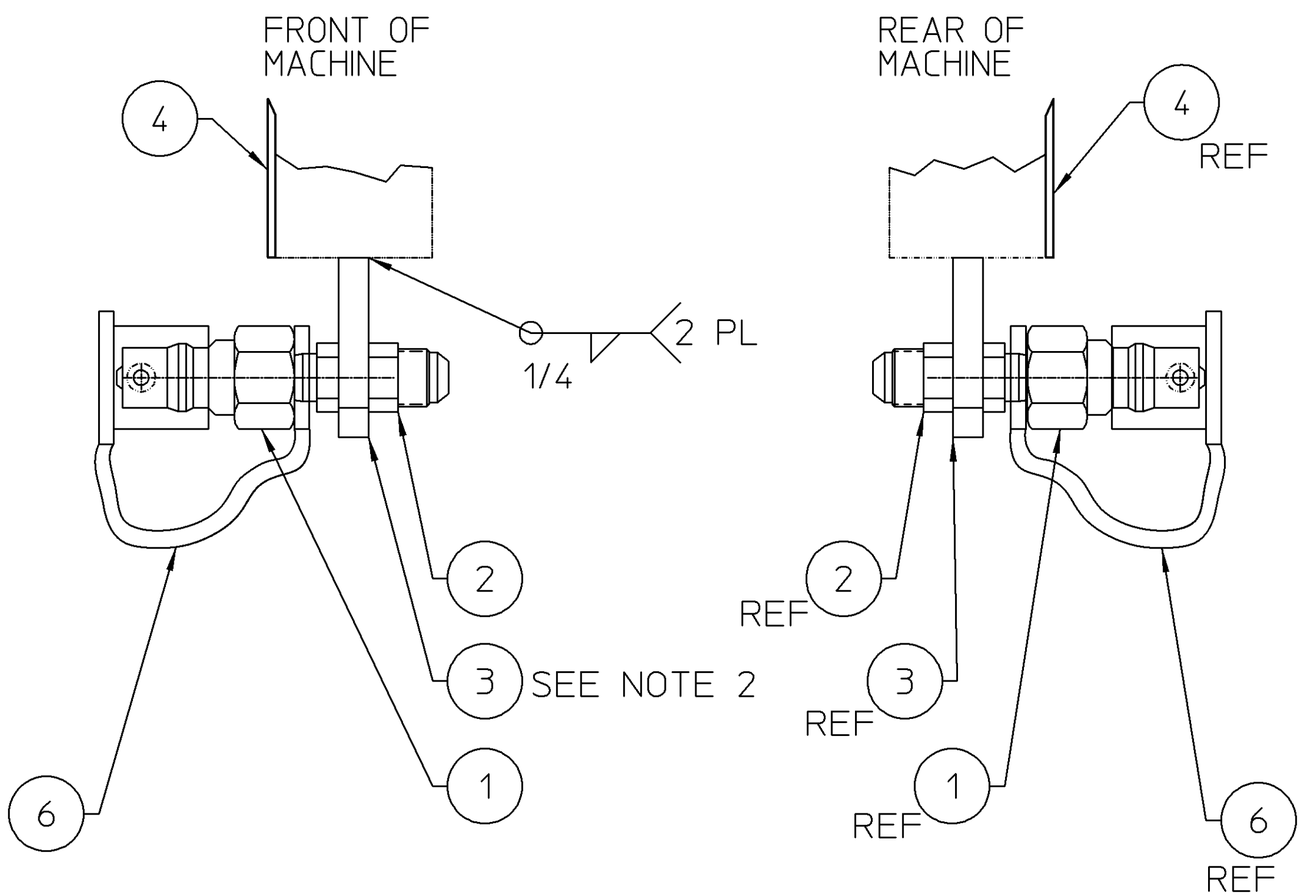

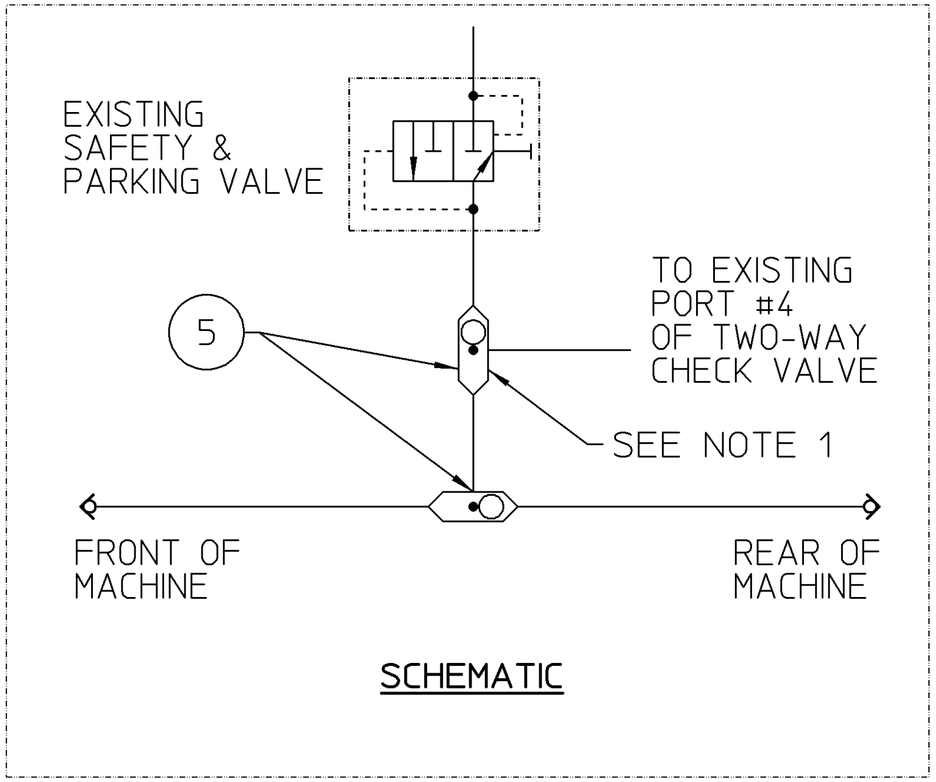

NOTES:

1. INSTALL SHUTTLE VALVES, IT-5, IN EXISTING AIR SYSTEM AS SHOWN. THEN RUN HOSE FOR QUICK DISCONNECT, IT-1, TO FRONT AND REAR OF MACHINE.

2. LOCATE IT.3 (EYE 1/4") AT EACH END OF THE MACHINE NEAR THE BUMPERS AND WELD IN PLACE.

FIG NO.	ITEM NO.	PART NUMBER	DESCRIPTION AND MATERIAL SIZE (REF.ONLY)	QTY
	6	0-3304086-0-25	QUICK CONNECT COVER	2
	5	0-3410004-0-02	1/4 NPT SHUTTLE VALVE	2
	4	G1578Y01	NP, FAILSAFE RELEASE	2
	3	C6100T54	EYE 1/4" THICK	2
	2	0-3304058-0-03	1/4 MNPT-JIC B'HEAD.STR.	2
	1	G2837Y01	QUICK CONNECT REWORK	2

SCALE=1

IMPLIED TOLERANCES
ALL DIMENSIONS ARE IN INCHES-TOLERANCE UNLESS OTHERWISE SPECIFIED

NOMINAL SIZE RANGE		PLUS OR MINUS			NOMINAL SIZE RANGE		PLUS OR MINUS		
OVER	TO	FRACTION	2 PLACE DECIMAL	3 PLACE DECIMAL	OVER	TO	FRACTION	2 PLACE DECIMAL	3 PLACE DECIMAL
-	1	1/64	.01	.003	6	24	3/64	.03	.008
1	6	1/32	.02	.005	24	-	1/16	.05	.010

ANGULAR DIMENSIONS PLUS OR MINUS 1 DEGREE

√ ALL MACHINED SURFACES TO HAVE A SURFACE FINISH OF 125 MICROINCHES UNLESS OTHERWISE SPECIFED.

WELDING SPECIFICATION

UNLESS OTHERWISE SPECIFIED ALL WELDS SHOULD ADHERE TO FAIRMONT TAMPER WELDING SPECIFICATION NO. 101

WEIGHT lbs.

3rd ANGLE PROJECTION

DO NOT SCALE

SHEET 1 CONT. ON –

DESCRIPTION (24
BRAKE QUICK RELEASE KIT

DRAWN DHEATH	DATE 11/14/96	MACHINE TYPE MARK I & II
CHECKED DGV	DATE 11/20/96	
APP-ENG JO'C	DATE 11/20/96	Fairmont Tamper™ 2401 Edmund Road-Box 20 Cayce-West Columbia, South Carolina 29171-0020 (803) 822-9160
APP-MFG	DATE	
LAST ECR. 10352 .5	CHECKED dvan DATE 2-Dec-97	ENG.DWG.NO. G1522XAA

THIS DOCUMENT CONTAINS PROPRIETARY INFORMATION AND SUCH INFORMATION MAY NOT BE DISCLOSED TO OTHERS FOR ANY PURPOSE OR USED FOR MANUFACTURING PURPOSES WITHOUT THE WRITTEN PERMISSION OF FAIRMONT TAMPER.

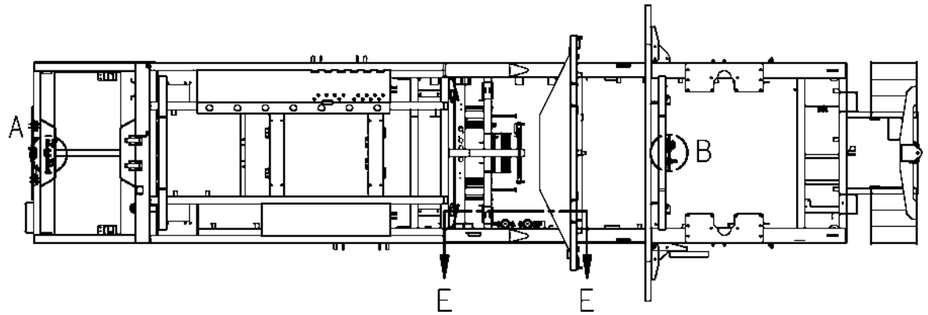

BOTTOM VIEW

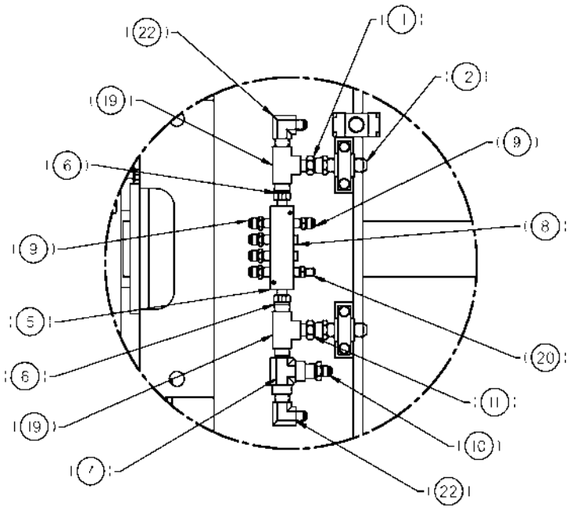

DETAIL A

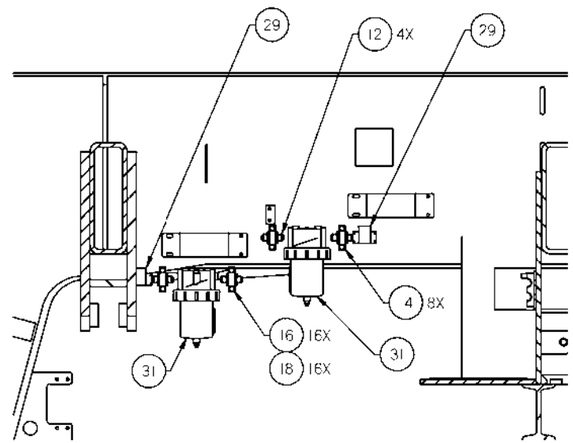

SECTION E-E

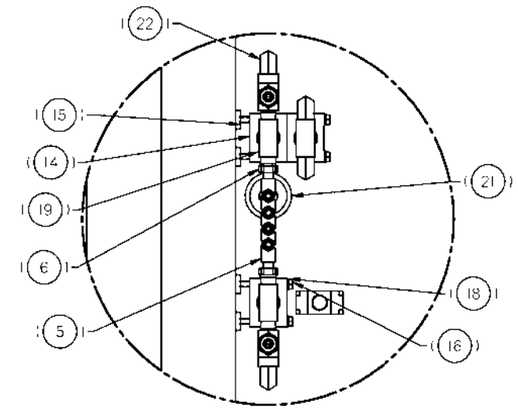

DETAIL B

Item Number	Part Number	Description	Quantity
1	4015467	DECAL, BRAKE HAZARD	3
2	4015468	DECAL, TOWING, REAR	1
3	4015469	DECAL, TOWING, FRONT	1
4	4015470	DECAL, TOWING, FRONT	1
5	478 YCI	AIR MANIFOLD	2
6	F024212	REDUCER -8MP-4MP USE F024212	4
7	F010692	TEE 8FPTX8NPTX8FPT	3
8	F010989	PLG 4NPT SKT	3
9	F010994	STR 6X4 NPT	0
10	F015959	STR 6X8NPT	3
11	F40059	DC-STR 6FSX4NPT	5
12	0-3305022-0-14	1/2 JUNCTION ADAPTER	9
13	F024720	STACKING NUT	8
14	0-3305021-0-01	2" HOLE CLAMP	8
15	0-3305022-0-20	WELD ADAPTER	8
16	F001489	H-CS .3125-18X.75	36
17	0-3305022-0-22	THREAD ADAPTOR 5/16-18	2
18	F001100	LW 3125	36
19	0-3410004-0-02	VERSA SHUTTLE VALVE	5
20	F012318	DC STR 4X4NPT	2
21	22423	LOW PRESSURE INDICATOR	1
22	F016850	ELB90 6X8NPT	6
23	0-3304085-0-37	AIR COUPLER, FEMALE	4
24	0-3305021-0-02	HYD. LINE CLAMP 2" SERIE	4
25	0-3304085-0-36	AIR COUPLER MALE	4
26	F040311	STR 6FSX4NPT	8
27	0-3305022-0-13	1/2 JUNCTION ADAPTER	8
28	0-3304088-0-17	QUICK DISC DUST COVER	4
29	0-3410004-0-04	1/2 NPT SHUTTLE VALVE	4
30	0-3304088-0-18	1 VALVE DUD COVER	4
31	0-3432000-0-02	FILTER AIR LINE MTG	2

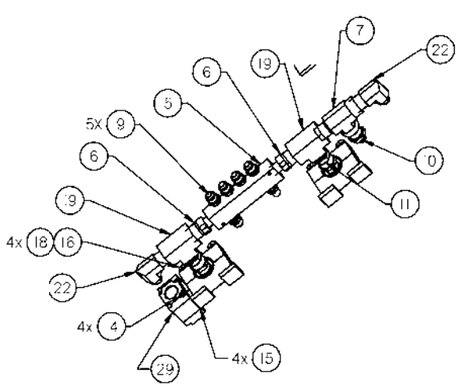

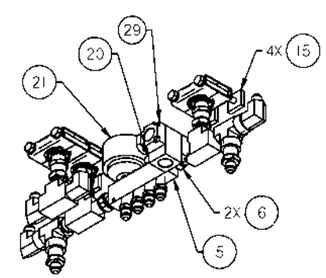

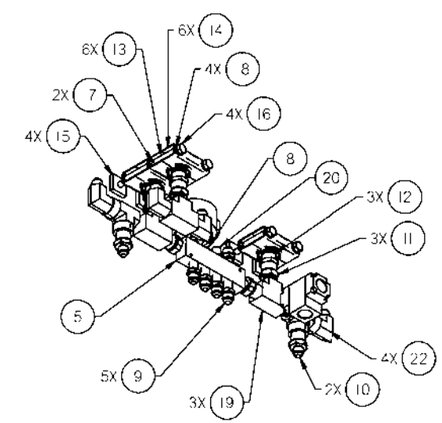

CONFIDENTIAL
© COPYRIGHT 2001 HARSCO TRACK TECHNOLOGIES. THE DRAWING OR DOCUMENT IS THE PROPERTY OF HARSCO TRACK TECHNOLOGIES AND EMBODIES CONFIDENTIAL INFORMATION OR TRADE SECRET INFORMATION AND OR KNOW HOW THAT IS THE PROPERTY OF HARSCO TRACK TECHNOLOGIES. BY ACCEPTING THE DRAWING OR DOCUMENT THE RECIPIENT AGREES (1) NOT TO PROVIDE OR OTHERWISE MAKE AVAILABLE THE DRAWING OR DOCUMENT OR ANY INFORMATION OR KNOW HOW FURNISHED THEREIN TO ANY THIRD PARTY AND (2) NOT TO REPRODUCE OR USE THE DRAWING OR DOCUMENT TO MANUFACTURE ANY APPARATUS OR DEVICE WITHOUT THE PRIOR WRITTEN AUTHORIZATION OF HARSCO TRACK TECHNOLOGIES

SOLID EDGE DRAWING

UNLESS OTHERWISE SPECIFIED DIMENSIONS ARE IN INCHES / METRIC

CHANGE	H.L.	REVISION	DATE
[illegible]	[illegible]	[illegible]	[illegible]
[illegible]	[illegible]	[illegible]	[illegible]
[illegible]	[illegible]	[illegible]	[illegible]

DESCRIPTION: EMERGENCY TOWING KIT

DRAWING STATUS: ---------- | MARK IV

DRAWN: 4021084.asm | BY: HW | DATE: 3-25-09

WT: 0.0 lbm | SCALE: 1:4 | CHK: HW

HTT Harsco Track Technologies, Harsco, Columbia, SC

4021084 | D | 1 of 2

Plotted by: nwiggins on 7/7/20 0 4021084.dfs

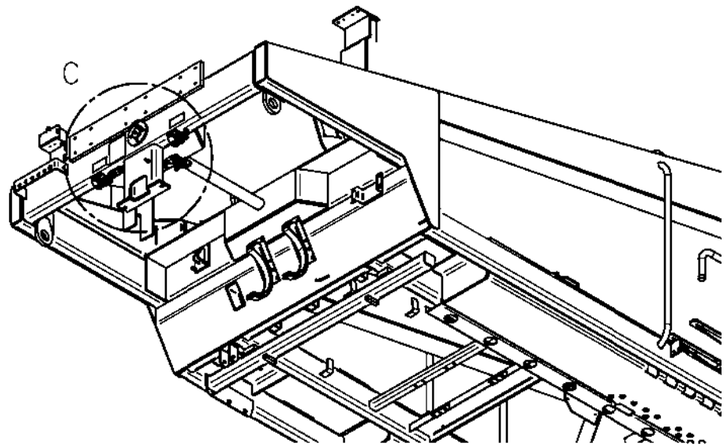

FRONT

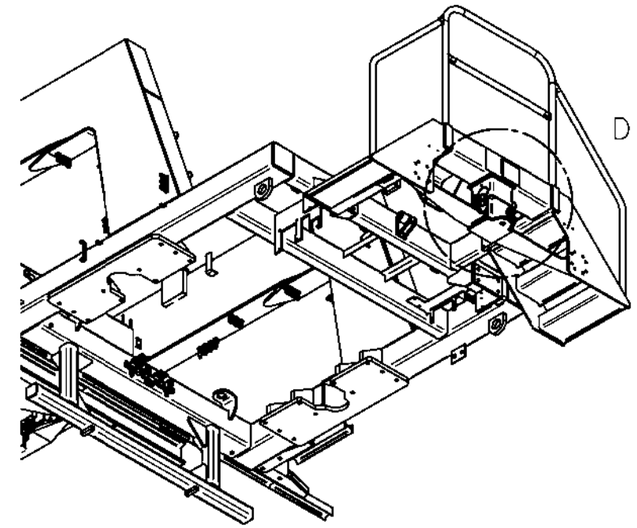

REAR

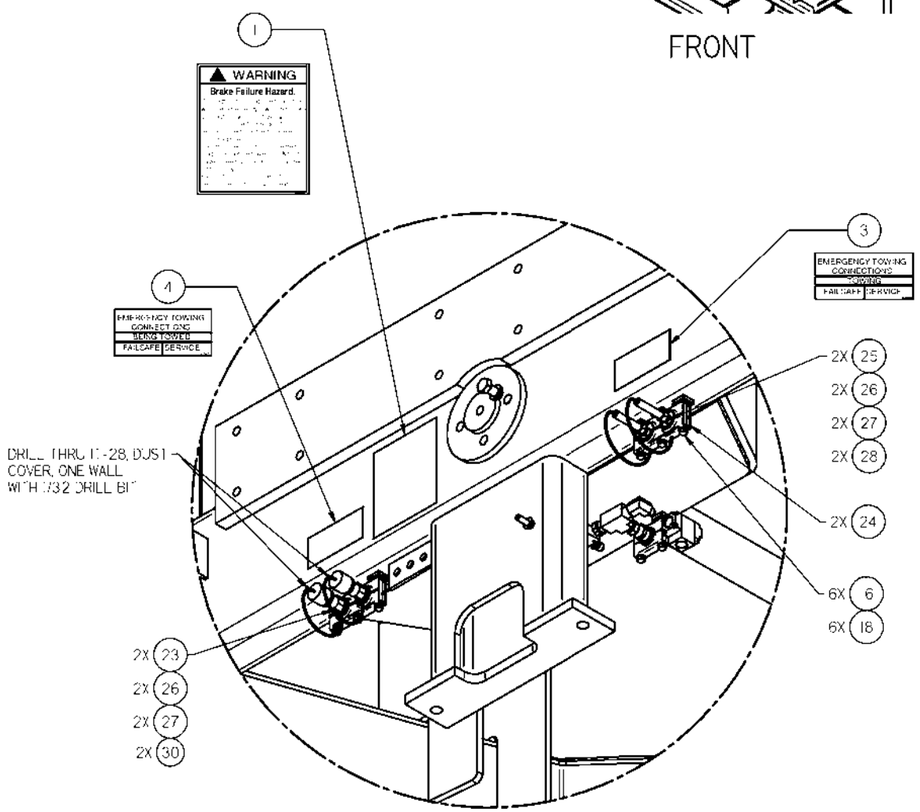

DETAIL C

NOTES:

1. ADDITIONAL ITEM 1:

TO BE PLACED INSIDE OF CAB ON LEFT INSET.

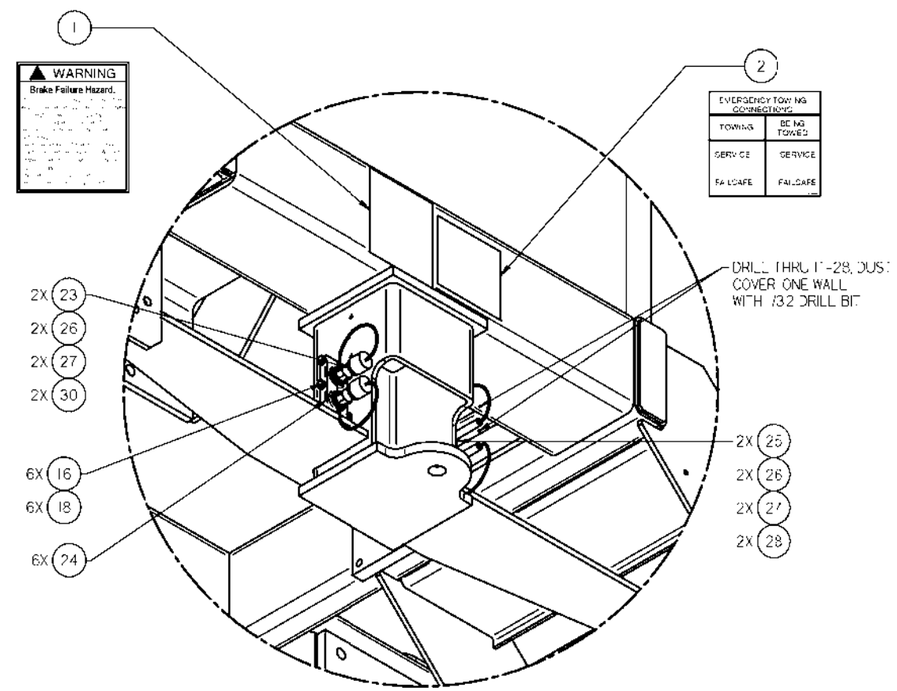

DETAIL D

CONFIDENTIAL
© COPYRIGHT 2001 HARSCO TRACK TECHNOLOGIES. THIS DRAWING OR DOCUMENT IS THE PROPERTY OF HARSCO TRACK TECHNOLOGIES AND EMBODIES CONFIDENTIAL INFORMATION, TRADE SECRET INFORMATION AND OR KNOW HOW THAT IS THE PROPERTY OF HARSCO TRACK TECHNOLOGIES. BY ACCEPTING THIS DRAWING OR DOCUMENT THE RECIPIENT AGREES (1) NOT TO PROVIDE OR OTHERWISE MAKE AVAILABLE THE DRAWING OR DOCUMENT OR ANY INFORMATION OR KNOW HOW PROVIDED THEREIN TO ANY THIRD PARTY AND (2) NOT TO REPRODUCE OR USE THE DRAWING OR DOCUMENT TO MANUFACTURE ANY APPARATUS OR DEVICE WITHOUT THE PRIOR WRITTEN AUTHORIZATION OF HARSCO TRACK TECHNOLOGIES.

SOLID EDGE DRAWING

UNLESS OTHERWISE SPECIFIED ALL SHARP EDGES WILL HAVE

CHANGE	RL	REVISION	DATE
[illegible]	[illegible]	[illegible]	[illegible]
[illegible]	[illegible]	[illegible]	[illegible]

DESCRIPTION: EMERGENCY TOWING KIT

DRAWING TITLE: ----------

MARK IV

CLIENT: 4021084.asm

SCALE: 1:4

DATE: 3-25-09

DRAWN: HW

CHECKED: HW

0.0 lbm

HTT
Harsco Track Technologies
Harsco
Columbia, SC

4021084 D 2 of 2

Plotted by nwiggins on 7/7/20 0 4021084.dft

CONFIDENTIAL

© COPYRIGHT 2001 HARSCO TRACK TECHNOLOGIES. THIS DRAWING OR DOCUMENT IS THE PROPERTY OF HARSCO TRACK TECHNOLOGIES AND EMBODIES CONFIDENTIAL INFORMATION, TRADE SECRET INFORMATION, AND/OR KNOW-HOW THAT IS THE PROPERTY OF HARSCO TRACK TECHNOLOGIES. BY ACCEPTING THIS DRAWING OR DOCUMENT, THE RECIPIENT AGREES (1) NOT TO PROVIDE, OR OTHERWISE MAKE AVAILABLE, THE DRAWING OR DOCUMENT, OR ANY INFORMATION OR KNOW-HOW EMBODIED THEREIN, TO ANY THIRD PARTY AND (2) NOT TO REPRODUCE OR USE THE DRAWING OR DOCUMENT TO MANUFACTURE ANY APPARATUS OR DEVICE, WITHOUT THE PRIOR WRITTEN AUTHORIZATION OF HARSCO TRACK TECHNOLOGIES.

SOLID EDGE DRAWING

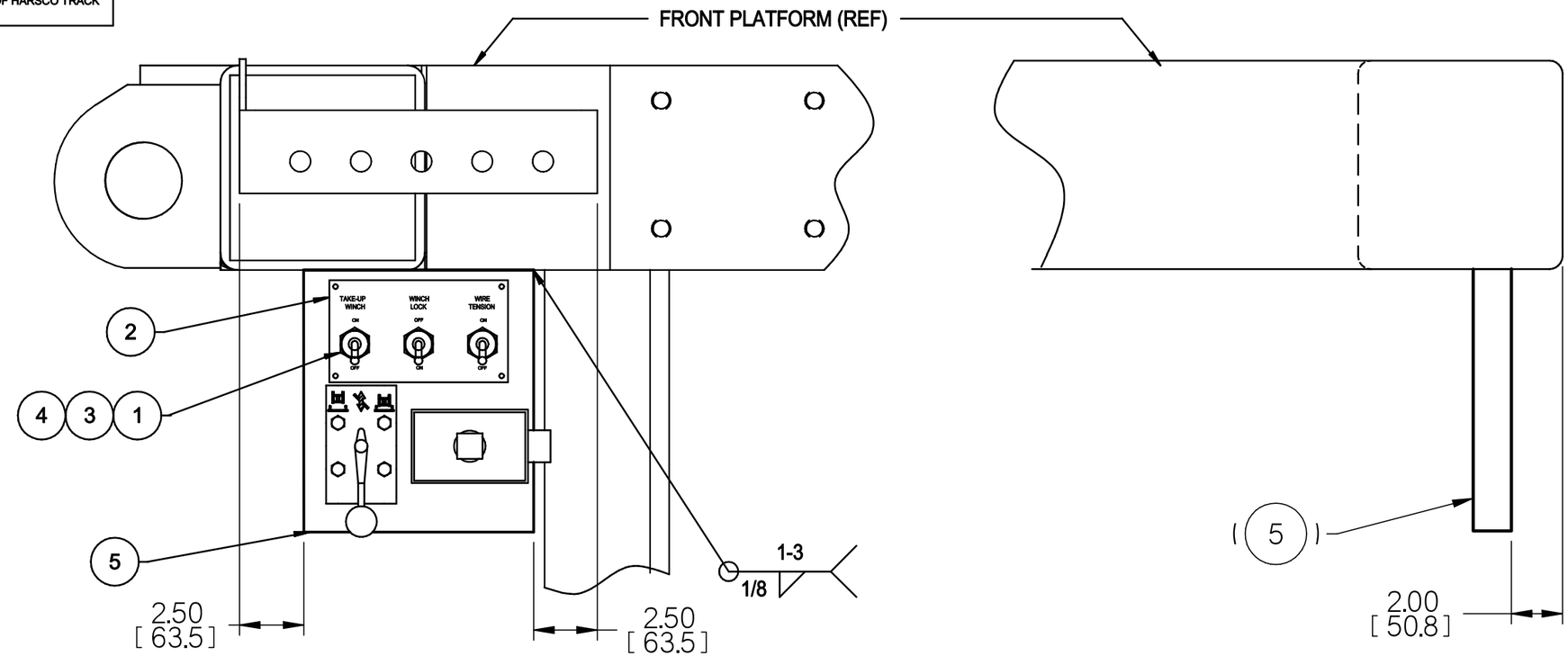

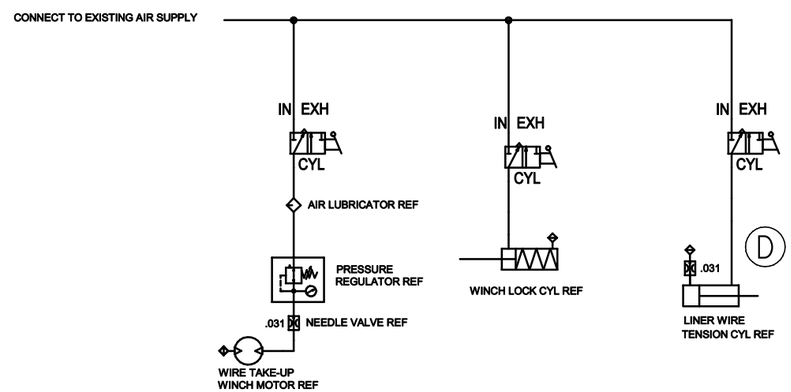

AIR SCHEMATIC

ITEM	PART NUMBER	DESCRIPTION	QTY
1	502673000	HUMPHREY VALVE	3
2	C1848X01	LINELITE NAMEPLATE	1
3	L423261	HOSE END, -4 JIC SW	15
4	L423094	HOSE, 1/4 LP	100
5	G2439W01	LINELITE BRACKET	1

IMPLIED TOLERANCES

ALL DIMENSIONS ARE IN INCHES - TOLERANCE UNLESS OTHERWISE SPECIFIED

NOMINAL SIZE RANGE OVER	NOMINAL SIZE RANGE TO	INCH PLUS OR MINUS 2 PLACE DECIMAL	INCH PLUS OR MINUS 3 PLACE DECIMAL	NOMINAL SIZE RANGE OVER	NOMINAL SIZE RANGE TO	METRIC PLUS OR MINUS 1 PLACE DECIMAL	METRIC PLUS OR MINUS 2 PLACE DECIMAL
0	6	.03	.005	0	150	.8	.13
6	24	.04	.008	150	600	1.0	.20
24	-	.06	.010	-	600	1.5	.25

UNLESS OTHERWISE SPECIFIED ALL MACHINED SURFACES WILL HAVE;
A SURFACE FINISH OF 125 MICROINCHES
ANGULAR TOLERANCE OF ±.50°
CONCENTRICITY WITHIN .010

THIRD ANGLE PROJECTION

UNLESS OTHERWISE SPECIFIED ALL WELDS SHOULD ADHERE TO THE LATEST HTT WELDING SPECIFICATION 101

CHANGE	R/L	REVISION	DATE
8678.85	A	RELEASE	3-27-97
101913	B	ADDED DIMENSION LOCATION FOR ITEM 5	7-18-08
102638	C	2.50 DIM WAS 3.50	3-31-09
EC502437	D	UPDATE SCHEMATIC AS BUILT, ITEM 1 WAS QTY 6	11-30-11

Description: LINELITE AIR COMPONENTS

Drawing Number: ----------
Machine Type: MARK VI
Model: G2451WAA.dft
Drawn: mfleming
Date Drawn: 7-17-08
Weight: ----------
Scale: 1:4
APVD Desg: HW
APVD ChEng: JBR
Mat'l: ----------

HTT
Harsco Track Technologies
Harsco
Columbia, SC

Part Number: G2451WAA
Size: B
Sheet: 1 of 1

Plotted by jduehlmeyer on 11/30/2011 G2451WAA.dft

AIR DRYER and PURGE TANK
REPAIR PARTS

ITEM	PART NO	DESCRIPTION	QTY
	C9785X01	Air Dryer and Purge Tank	1
	C9785X15	Air Dryer and Purge Tank	1
	C9785X03	Desiccant Cartridge	1
	C9785X06	Safety Valve Kit, 175 PSI	1
	C9785X07	Regeneration Valve Kit	1
	C9785X08	Purge Valve Kit	1
	C9785X09	Check Valve Kit	1
	C9785X11	Heater Kit - 24 VDC	1
	C9785X12	Air Dryer Muffler Kit	1
	190403	Air Dryer Monitor	1
	FOR7445	Turbo Valve Kit	1
	F025550	Desiccant Cartridge	1
	411818	Safety Valve, 150 PSI	1
	411819	Unloader Valve	1

AIR FILTERS
REPAIR PARTS

ITEM	PART NO	DESCRIPTION	QTY
	0-3432000-0-02	Air Line Filter	1
	0-3432000-0-14	Element	1

HYDRAULIC COMPONENTS

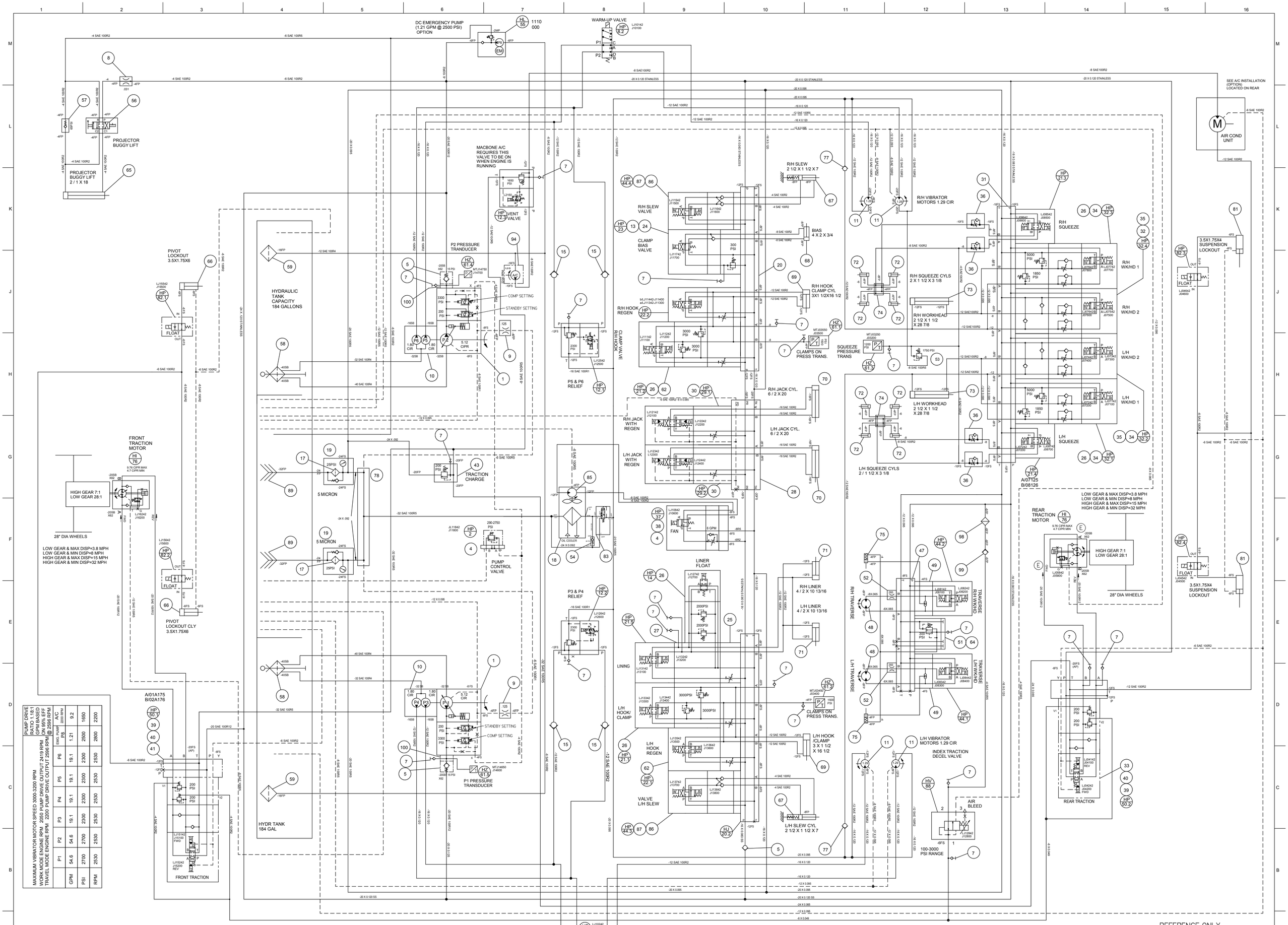

PUMP DRIVE RATIO 1:18:1								
MAXIMUM VIBRATOR MOTOR SPEED 3000-3200 RPM								
WORK MODE ENGINE RPM 2050 PUMP DRIVE OUTPUT 2419 RPM								
TRAVEL MODE ENGINE RPM 2200 PUMP DRIVE OUTPUT 2596 RPM								
	P1	P2	P3	P4	P5	P6	EXC. PUMP P8	A/C @ 2596 RPM 2200 RPM
GPM	54.6	54.6	19.1	19.1	19.1	19.1	1.21	9.2
PSI	2700	2700	2300	2300	2300	2300	2500	1650
RPM	2530	2530	2530	2530	2530	2530	2800	2200

REFERENCE ONLY

CONFIDENTIAL
© COPYRIGHT 2001 HARSCO TRACK TECHNOLOGIES. THIS DRAWING OR DOCUMENT IS THE PROPERTY OF HARSCO TRACK TECHNOLOGIES AND EMBODIES CONFIDENTIAL INFORMATION, TRADE SECRET INFORMATION, AND/OR KNOW-HOW THAT IS THE PROPERTY OF HARSCO TRACK TECHNOLOGIES. BY ACCEPTING THIS DRAWING OR DOCUMENT, THE RECIPIENT AGREES (1) NOT TO PROVIDE, OR OTHERWISE MAKE AVAILABLE, THE DRAWING OR DOCUMENT, OR ANY INFORMATION OR KNOW-HOW EMBODIED THEREIN, TO ANY THIRD PARTY AND (2) NOT TO REPRODUCE OR USE THE DRAWING OR DOCUMENT TO MANUFACTURE ANY APPARATUS OR DEVICE, WITHOUT THE PRIOR WRITTEN AUTHORIZATION OF HARSCO TRACK TECHNOLOGIES.

IMPLIED TOLERANCES
ALL DIMENSIONS ARE IN INCHES - TOLERANCE UNLESS OTHERWISE SPECIFIED

INCH				METRIC			
	PLUS OR MINUS				PLUS OR MINUS		
UNDER	TO	2 PLACE DECIMAL	3 PLACE DECIMAL	UNDER	TO	2 PLACE DECIMAL	3 PLACE DECIMAL
0	6	.03	.005	0	150	.8	.13
6	24	.04	.008	150	600	1.0	.20
24	-	.06	.010	600		1.5	.25

UNLESS OTHERWISE SPECIFIED ALL MACHINING SURFACES WILL HAVE:
A SURFACE FINISH OF 125 MICROINCHES
ANGULAR TOLERANCE OF ± 30'
CONCENTRICITY WITHIN .010
THIRD ANGLE PROJECTION
UNLESS OTHERWISE SPECIFIED ALL WELDS SHOULD BE MADE IN ACCORDANCE WITH WELDING SPECIFICATION 101

CHANGE	R/L	REVISION		DATE
EC500537	A	RELEASE		2/15/11
EC501164	B	CHANGED R/H SLEW PLUMBING, REMOVED TEMP SWITCH	BPA	5/16/11
EC501774	C	COMP SETTING WAS 290-2750	BPA	7/14/11
EC501954	D	UPDATED WIRE NUMBERS	BPA	9/1/11
EC503310	E	REAR TRACTION A& B REVERSED, FWD & REV CHANGED	BPA	3/27/12

Description: HYDRAULIC SCHEMATIC
Drawing Number
Machine Type: MK IV
Model
Weight
Scale:
Drawn: badler
Date Drawn
APVD Eng. BPA
APVD Dfting JBR
Part Number: 5004442
Size: E
Sheet: 1 of 2

HTT
Harsco Track Technologies
Harsco
Columbia, SC

Plotted by badler on 3/29/2012 5004442.dft

ITEM NO	PART NUMBER	DESCRIPTION	QUANTITY
1	5005833	PUMP, VAR VOL PISTON	
2	4029520	VALVE, PROP. PRESS RELIEF	*
3			*
4	0-3361006-0-03	SUBPLATE DO1 6SAE	*
5	3400678	CHECK VALVE 15 PSI -16 CODE 61	*
6	L41208	CHECK VALVE 3PSI 1/4 NPT	*
7	L41228	QUICK DISCONNECT 1/4 NPT	*
8	5007825	VALVE, 2 POS 6 WAY	*
9	187901	ORIFICE FITTING 0.125	*
10	4029715	PUMP, DBL GEAR	*
11	4012702	MOTOR, PISTON	*
12	C1140Y04	RELIEF VALVE	*
13	0-3336003-0-02	CHECK VALVE SWCH DO5	*
14	0-3333037-0-08	SOL VALVE 4/2/DO5 24VDC	*
15	L40549	CHECK VALVE 3PSI 3/4NPT	*
16			*
17	D4376Y03	FILTER ELEMENT (5 MICRON)	*
18	4001051	OIL COOLER ASSEMBLY	*
19	C9249Y05	RETURN FILTER	
20	A0757Y04	MANIFOLD DO2 4 STATION	*
21	0-3333037-0-09	SOL VALVE 4/3 DO2 24VDC	*
22	0-3333037-0-18	SOL VALVE 4/3 DO2 24VDC	*
23	0-3333037-0-10	SOL VALVE 4/2 DO2 24VDC	*
24	0-3334013-0-05	PR REDUCING VALVE DO2	*
25	0-3335024-0-11	FLOW CONTROL SWCH DO2	*
26	A1070Y19	DUAL RELIEF SWCH DO2	*
27	C3759W02	DO5 SWCH ADAPTER	*
28	A0963Y01	MANIFOLD DO6 2 STATION	*
29	A4490Y07	SOL VALVE 4/3 DO6 24VDC	*
30	B9529Y01	FLOW CONTROL SWCH DO6	*
31	0-3360012-0-05	MANIFOLD DO2 6 STATION	*
32	0-3333037-0-19	SOL VALVE 4/3 DO2 24VDC	*
33	D6328X01	SUBPLATE D08 (-20 SAE)	*

ITEM NO	PART NUMBER	DESCRIPTION	QUANTITY
34	0-3335024-0-12	DUAL FLOW SWCH DO2	*
35	0-3336002-0-01	ANTICAV CHECK SWCH. DO2	*
36	0-3335012-0-01	FLOW CONTROL, 10SAE	*
37	C0993Y07	DIR VALVE 2POS DO3	
38	0-3335031-0-15	FLOW CONTROL D03	
39	A2803Y04	ANTICAV CHECK SWCH DO6	*
40	0-3334057-0-07	DUAL RELIEF SWCH. DO6	*
41	0-3361004-0-05	SUBPLATE, DO6, -20 SAE	*
42			*
43	0-3334011-0-06	RELIEF VALVE 1 1/4 NPT	*
44	C0993Y03	SOL.VALVE 4/3 DO1 24VDC	*
45	0-3334012-0-08	RELIEF SWCH. DO1 (B-T)	*
46	C0613Y07	REDUCING/RLV. SWCH. DO1	*
47	0-3364012-0-02	MANIFOLD, DO1, 3 STN.	*
48	L411545	GEROTOR MOTOR	*
49	C0674Y01	SHUTTLE VALVE,DO1 SWCH	*
50	A4490Y03	SOL.VALVE,4/3,DO6, 24VDC	*
51	C0613Y01	REDUCE/RELIEF DO1 SWCH	*
52	0-3304175-0-11	ORIFICE FITTING (Ø.093)	*
53	0-3334049-0-12	RELIEF VALVE	
54	L425375	CHECK VALVE 65 PSI	
55	0-3316003-0-04	EMERGENCY PUMP, 24VDC	*
56	L410606	ROTARY CONTROL 1/4NPT	*
57	0-3336021-0-33	CHECK VALVE,65PSI,1/4NPT	*
58	D4176Y01	SUCT STR, 2 1/2 4-BOLT	*
59	0-3351002-0-01	SUCTION STRAINER 1" NPT	*
60	0-3380000-0-04	FLOW DIFFUSER, 2 NPT	*
61	4008374	PRESSURE TRANS KIT	*
62	H2247Y01	DUAL FLOW REG ASSY	*
63	A0730Y04	SOL. VALVE	*
64	0-3360011-0-06	MANIFOLD BLANKING PLT	*
65	G7733YAA	CYL. W/ROD ENDS(2 X 1 X 18)	Projector Buggy Lift System
66	340311-1	HYD CYL 3.5X1.75X6	CYL. PIVOT LOCKOUT

ITEM NO	PART NUMBER	DESCRIPTION	QUANTITY
67	B7036WAC	CYLINDER, SLEW	Slew
68	B5705XAB	CYLINDER, BIAS	Bias
69	B5708XAA	CYLINDER, HOOKS	Hooks
70	B5715XAE	CYLINDER, JACKS	Jacks
71	B5705XAF	CYLINDER, LINER	Liner
72	X68297	CYLINDER, SQUEEZE	Squeeze
73	B5761XAA	CYLINDER, WORKHEAD	Workheads
74	Y766772Y	SQUEEZE MANIFOID	Squeeze
75	0-3372001-0-01	CYLINDER, LOCKOUT	Wk/Hd Lockout
76	4029264	MOTOR, VAR DISP	Traction Motor
77	0-3336021-0-07	CHECK VALVE (5 PSI)	Workheads Anti-cavitation
78	4001209	MANIFOLD	Cooler Return
79			
80			
81	330840-1	HYD CYL 3.5x1.75x4	Suspension Lockout
82	158350-1	VALVE 2 WAY SOL OP	Suspension Lockout
83	4001118	THERMAL BYPASS VALVE	Oil Cooler
~~84~~	~~A1556Y21~~	~~TEMP SWITCH~~	~~Oil Cooler~~
85	C7376Y04	HYD MOTOR	Oil Cooler
86	0-3360011-0-03	DO3 TO DO5 ADAPTOR	Slew
87	0-3336024-0-07	CHECK VALVE SWCH DO3	Slew
88	D8305Y01	PRESSURE REDUCING VALVE	Traction Decel (Electric)
89	0-3380000-0-03	FLOW DIFFUSER 2 1/2 NPT	Hydraulic Tank
90			
91			
92			
93			
94	B9932Y10	GEAR PUMP	Traction, AC
95			
96	0-3336024-0-02	SANDWICH CHECK VALVE, D03	Suspension Lock Out
97			
98	A5748Y01	FILTER	Traction Decel Pilot
99	L41209	CHECK VALVE	Traction Decel Pilot
100	F024596	GAGE PORT ADAPTOR	

REFERENCE ONLY

SOLID EDGE DRAWING

CONFIDENTIAL
© COPYRIGHT 2001 HARSCO TRACK TECHNOLOGIES. THIS DRAWING OR DOCUMENT IS THE PROPERTY OF HARSCO TRACK TECHNOLOGIES AND EMBODIES CONFIDENTIAL INFORMATION. TRADE SECRET INFORMATION, AND/OR KNOW-HOW THAT IS THE PROPERTY OF HARSCO TRACK TECHNOLOGIES. BY ACCEPTING THIS DRAWING OR DOCUMENT, THE RECIPIENT AGREES (1) NOT TO PROVIDE, OR OTHERWISE MAKE AVAILABLE, THE DRAWING OR DOCUMENT, OR ANY INFORMATION OR KNOW-HOW EMBODIED THEREIN, TO ANY THIRD PARTY AND (2) NOT TO REPRODUCE OR USE THE DRAWING OR DOCUMENT TO MANUFACTURE ANY APPARATUS OR DEVICE, WITHOUT THE PRIOR WRITTEN AUTHORIZATION OF HARSCO TRACK TECHNOLOGIES.

IMPLIED TOLERANCES
ALL DIMENSIONS ARE IN INCHES - TOLERANCE UNLESS OTHERWISE SPECIFIED

INCH NOMINAL RANGE		PLUS OR MINUS 2 PLACE DECIMAL	3 PLACE DECIMAL	METRIC NOMINAL RANGE		PLUS OR MINUS 1 PLACE DECIMAL	2 PLACE DECIMAL
0	6	.03	.005	0	150	.8	.13
6	24	.04	.008	150	600	1.0	.20
24	-	.06	.010	-	600	1.5	.25

UNLESS OTHERWISE SPECIFIED ALL MACHINED SURFACE FINISH IS 125 MICRO.
& SURFACE FINISH OF 125 MICRO AND ANGULAR TOLERANCE OF ± 30'
CONCENTRICITY ±0.01mm .010

THIRD ANGLE PROJECTION

UNLESS OTHERWISE SPECIFIED ALL WELDS SHOULD ADHERE TO THE LATEST HTT WELDING SPECIFICATION 101

CHANGE	R/L	REVISION	DATE
EC500537	A	RELEASE	2/15/11
EC501164	B	DEL ITEM 84	BPA 5/16/11
EC501774	C	82 WAS A0729Y06	BPA 8/15/11
EC503310	E	NO CHANGE	BPA 9/19/11

Description: HYDRAULIC SCHEMATIC
Drawing Number
Machine Type: MK IV
Model
Weight
Scale:
Drawn: badler
Date Drawn
APVD Eng: BPA
APVD Mfg: JBR
Mat'l

HTT
Harsco Track Technologies
Harsco
Columbia, SC

Part Number: 5004442
Size: E
Sheet: 2 of 2

Plotted by badler on 3/29/2012 5004442.dft

ITEM	PART NUMBER	DESCRIPTION	QTY
20	C9102WAA	W/H TRAVERSE VALVE ASSY	REF
30	C9087VAA	JACK REGEN VALVE ASSY	REF
40	C9112VAC	BIAS & CLAMP VALVE ASSY	REF
50	C9104VAB	LINER & CLAMP VALVE ASSY	REF
60	C9101VAA	WORKHEAD VALVE ASSY	REF
~~70~~	~~C9095WAG~~	~~FRONT TRACTION VALVE ASSY~~	~~REF~~
80	C9095WAH	REAR TRACTION VALVE ASSY	REF
90	4015442	BRACKET, HOSE SUPPORT	1
100	4008374	TRANSDUCER, HYDRAULIC PRESS	2
110	F006917	DC-HEX HD CAP SCR 3/8-16X7/8 G	8
120	F001025	LOCK WASHER, 3/8 SAE MED PL	8
130	F001539	DC-HEX HD CAP SCR 1/2-13X1 1/4	4
140	F001075	DC-SAE RGLR LOCK WASHER 1/2 ZP	12
150	173797	SKT HD CS 1/4-20X3 BKO	2
160	4011662	L/H VIBRATOR RELIEF VALVE ASSY	1
170	4011663	R/H VIBRATOR RELIEF VALVE ASSY	1
~~180~~	~~A0036071~~	~~3/8-16 X 2 3/4 HH CAPSCREW~~	~~4~~
190	F015536	DC-TEE 12X12FSX12	1
200	F026228	SKT HD CS #10-24X1 3/4	4
210	F015922	DC-3/8-16 ELASTIC STOP NUT *	2
~~220~~	~~F018029K~~	~~#10-24 ELASTIC STOP NUT~~	~~4~~
~~230~~	~~4011646~~	~~W/H WARM-UP VALVE ASSY~~	~~REF~~
240	4011685	DECEL VALVE ASSY	1
250	4011686	SQUEEZE RELIEF VALVE ASSY	1
260	L41228	PLUG, QUICK COUPLING	1
280	0-3201001-0-10	GROMMET	1
300	L420110	PLUG, HEX. PIPE	1
~~310~~	~~4015393~~	~~VALVE ASSY, SUSPENSION LOCKOUT~~	~~REF~~
330	F011114	DC-ELB90 8X6NPT	1
340	D4437X05	HOSE CLAMP (9 HOLE)	4
350	D4437X06	HOSE CLAMP (3 HOLE)	12
360	F012055	DC-ELB90 6X6NPT	1
380	F011079	DC-STR 6NPTX4FPT	1
~~390~~	~~F022223~~	~~DC-ELB90 20X20FS~~	~~3~~
400	F021990	DC-TEE 20X20FSX20	4
410	L425923	FITTING	6
420	F025500	ADAPTER	8
~~430~~	~~F040257~~	~~DC-ADAPTER~~	~~3~~
450	F021989	DC-ELB45 20X20FS	2
460	F001442	DC-HEX HD CAP SCR 1/2-13X2 GR5	8
470	F012241	1/4 LW-ZINC PLATED	2
~~480~~	~~A0059003~~	~~3/8 REG PL WSHR~~	~~4~~
490	0-3305026-0-09	JUNCTION ADAPTER	2
500	F017193	-16 ORB HEX PLUG	4
510	F014252	DC-ELB90 16X16SAE	4

ITEM	PART NUMBER	DESCRIPTION	QTY
520	F013990	DC-ELB90 12X12FS	1
530	F040392	DC-SWIVEL REDUCER	9
540	F022949	DC-REDUCER	2
550	F014240	DC-ELB90 16X16FS	4
560	F015625	TEE 8X8X8FS	1
570	0-3305026-0-10	JUNCTION ADAPTER	4
580	F024758	DC-ADAPTER	4
590	F013701	DC-ELB90 8X8 SAE	4
600	0-3305024-0-21	MALE JIC ADPT.3/4	20
610	0-3305024-0-22	JUNCTION ADAPTOR	10
620	0-3305024-0-23	MALE JIC ADPT.1 1/4	15
630	F012027	DC-STR 8X8NPT	4
700	F024719	DC-STR 12X12	15
710	0-3305022-0-18	JUNCTION ADAPTER	12
720	0-3305023-0-04	CLAMPING UNIT (1 pair)	8
730	0-3305023-0-01	HYD LINE CLAMP	21
740	0-3305023-0-02	HYD LINE CLAMP	13
750	0-3305023-0-03	CLAMPING UNIT (1 pair)	4
760	0-3305024-0-01	SPLIT BUSHING	1
770	0-3305024-0-02	SPLIT BUSHING	4
780	0-3305024-0-04	SPLIT BUSHING	11
790	0-3305024-0-06	SPLIT BUSHING	7
800	0-3305024-0-07	SPLIT BUSHING	14
810	0-3305024-0-08	SPLIT BUSHING	10
820	0-3305024-0-17	WELD ADAPTER	50
830	0-3305024-0-18	Stacking Nut	137
840	0-3305024-0-19	THREAD ADAPTER	81
850	A0061011	3/8 HEAVY LOK WSHR	78
860	A0036065	3/8-16 X 1 1/4 HH CAPSCREW	82
870	0-3305021-0-01	HYD LINE CLAMP 2" SERIES	4
880	0-3305021-0-02	HYD LINE CLAMP 2"SERIES 2HOLE	4
890	0-3305021-0-03	HYD LINE CLAMP 2" SERIES	4
900	F024716	CLAMPING UNIT	4
910	0-3305022-0-20	WELD ADAPTER	31
920	F024720	STACKING NUT	59
930	0-3305022-0-22	THREAD ADAPTER	6
940	F009546	DC-SAE RGLR LOCK WASH 5/16	81
950	F002831	HEX HD CAP SCR 5/16X18X7/8 GR5	47
960	F018615	SAE WASHER 5/16 ZP	12
970	F001113	DC-HEX HD CAP SCR 5/16-18X1 1/	10
980	0-3305025-0-01	HYD LINE CLAMP	1
990	0-3305025-0-02	HYDRAULIC LINE CLAMP	36
1000	0-3305026-0-05	SPLIT BUSHING	20
1010	0-3305026-0-12	STACKING NUT	38
1020	F001489	DC-HEX HD CAP SCR 5/16-18X3/4	20

ITEM	PART NUMBER	DESCRIPTION	QTY
1030	0-3305018-0-02	HYD TBG 3/8 OD X .049W	40
1040	0-3305018-0-03	HYD TBG 1/2 OD X .065W	52
1050	0-3305018-0-05	HYD TBG 3/4 OD X .095W	190
1060	0-3305018-0-06	HYD TBG 1 OD X .120W	112
1070	0-3305020-0-01	HYD TBG 1-1/4 OD X .095W	53
1080	0-3305020-0-02	HYD TBG 1-1/2 OD X .095W	40
1090	D7978Y01	HYD TBG SS 1 OD X .083W	15
1100	D7978Y02	HYD TBG SS 1-1/4 OD X .120W	40
1110	D7978Y03	HYD TBG SS 1-1/2 OD X .125W	26
1120	0-3304120-0-05	NUT	4
1130	0-3304120-0-06	NUT	18
1140	0-3304120-0-08	3/4 JIC TUBE NUT	54
1150	0-3304120-0-09	NUT	52
1160	0-3304120-0-10	NUT	26
1170	0-3304121-0-05	SLEEVE F017917	4
1180	0-3304121-0-06	SLEEVE	18
1190	0-3304121-0-08	3/4 JIC TUBE SLEEVE	54
1200	0-3304121-0-10	SLEEVE	52
1210	0-3304121-0-11	SLEEVE	26
1220	A0036014	1/4-20 X 3 HHCAPSCREW	2
1230	F013588	DC-1/4-20 ELAS STP NUT	2
1240	A0036009	1/4-20X2 HHCAPSCREW	4
1250	Z766621-003	BROOM HOSE (18")	4
1260	D4437X07	CLAMP PLATE	8
1270	D4437X08	CLAMP PLATE	24
1280	0-3304119-0-11	-24 X 90 DEG JIC ELBOW	1
1290	0-3304120-0-11	JIC TUBE NUT	3
1300	0-3304121-0-12	TUBE SLEEVE	3
1310	0-3305024-0-33	SPLIT BUSHING	3
1320	F014476	5/16 ELASTIC STOP NUT	36
1330	F012888	5/16-18 X 2 3/4 HHCS U/F012888	36
1340	F024046	DC - STR 4X6NPT	2
1350	F011604	STR 6NPTX6NPT	1
1360	F002721	DC-HEX HD CAP SCR 3/8-16X3 3/4	2
1370	A5748Y01	IN-LINE HYD FILTER	1
1380	L41209	VALVE, 3 PSI CHECK	1
1390	F014779	DC-TEE 12X12X12FS	1
1400	L422320	HOSE CLAMP	6
1410	F012504	ADAPTER **	2
1420	5009363	HOSE KIT	1
1430	5004628	MK IV (L&H) VALVE KIT	1
1440	5004762	MK IV (FTI) VALVE KIT	1
1450	5004764	MARK IV FITTING KIT	1
~~1460~~	~~A5045Y01~~	~~VALVE, RELAY~~	~~1~~
~~1470~~	~~A5045Y02~~	~~VALVE, RELAY~~	~~1~~
1480	5007825	VALVE, 2 POS 6 WAY	2
~~1490~~	~~5007887~~	~~PLATE, MOUNTING~~	~~2~~
~~1500~~	~~5007888~~	~~PLATE, MOUNTING~~	~~2~~
1510	408583	HEX HD CS M8X1.25X25 CL10.9 ZP	4
1520	149615	LOCKWASHER 8MM	4
~~1530~~	~~F040184~~	~~DC-HEX FLG CS 1/4-20X3/4 GR5 Z~~	~~4~~
1540	158350-1	2 WAY, SOL OP	2
1550	196697	TEST POINT, 3/4-16 UNF, -08	2

Inch
[mm]

CONFIDENTIAL
© COPYRIGHT 2010 HARSCO. THIS DRAWING OR DOCUMENT IS THE PROPERTY OF HARSCO AND EMBODIES CONFIDENTIAL INFORMATION, TRADE SECRET INFORMATION, AND/OR KNOW-HOW THAT IS THE PROPERTY OF HARSCO. BY ACCEPTING THIS DRAWING OR DOCUMENT, THE RECIPIENT AGREES (1) NOT TO PROVIDE, OR OTHERWISE MAKE AVAILABLE, THE DRAWING OR DOCUMENT, OR ANY INFORMATION OR KNOW-HOW EMBODIED THEREIN, TO ANY THIRD PARTY AND (2) NOT TO REPRODUCE OR USE THE DRAWING OR DOCUMENT TO MANUFACTURE ANY APPARATUS OR DEVICE, WITHOUT THE PRIOR WRITTEN AUTHORIZATION OF HARSCO.

	INCH			METRIC			
	NOMINAL SIZE RANGE	TOL	PLUS OR MINUS 1 PLACE DECIMAL	PLUS OR MINUS 2 PLACE DECIMAL	NOMINAL SIZE RANGE	TOL	PLUS OR MINUS 1 PLACE DECIMAL	PLUS OR MINUS 2 PLACE DECIMAL
	0	6	.03	.005	0	150	.8	1.5
	6	24	.04	.008	150	600	1.0	.20
	24	-	.06	.010	600	-	1.5	.25

UNLESS OTHERWISE SPECIFIED ALL MACHINED SURFACES WILL HAVE:
A SURFACE FINISH OF 125 MICRONCHES
ANGULAR TOLERANCE OF ± 30'
CONCENTRICITY WITHIN .010

THIRD ANGLE PROJECTION

UNLESS OTHERWISE SPECIFIED, ALL WELDS SHOULD BE MADE USING THE MOST CURRENT A.W.S WELDING STANDARDS

CHANGE	R/L	REVISION	DR	DATE
EC501888	F	IT 1420 WAS 4016555	GMM	8/31/11
EC502799	G	ADD 1550	BPA	1/30/12

Description: HYDRAULIC INTERCONNECT
HARSCO RAIL
Material
Machine Type: MARK IV
Size: E
Weight
Drawn: jduehlmeyer
Date Drawn: 1/20/2011
Part Number: 5004704
Sheet: 1 of 2
SOLID EDGE DRAWING
DO NOT SCALE

Plotted by jduehlmeyer on 1/25/2011 5004704.dft

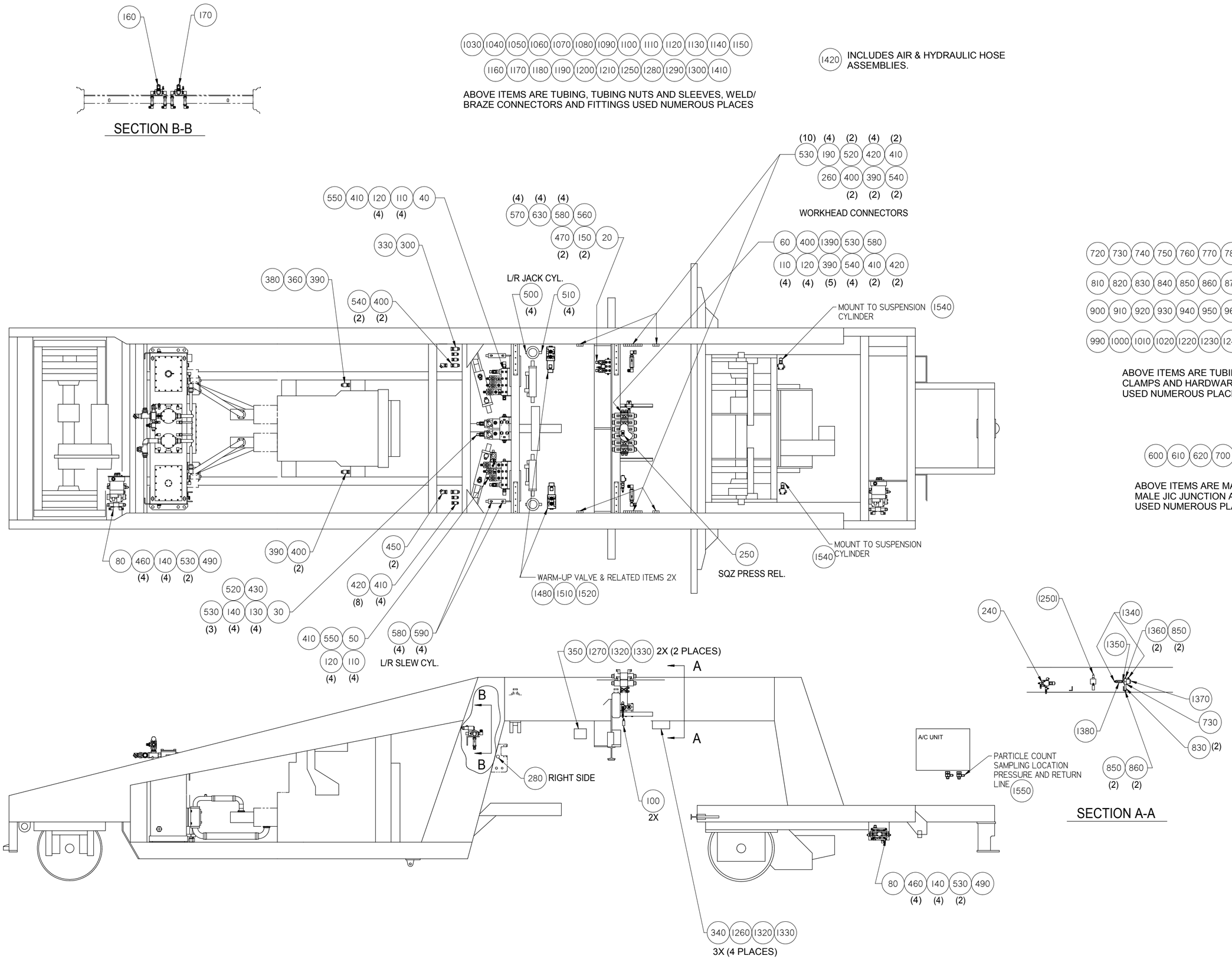

Inch
[mm]

CONFIDENTIAL
© COPYRIGHT 2010 HARSCO. THIS DRAWING OR DOCUMENT IS THE PROPERTY OF HARSCO AND EMBODIES CONFIDENTIAL INFORMATION, TRADE SECRET INFORMATION, AND/OR KNOW-HOW THAT IS THE PROPERTY OF HARSCO. BY ACCEPTING THIS DRAWING OR DOCUMENT, THE RECIPIENT AGREES (1) NOT TO PROVIDE, OR OTHERWISE MAKE AVAILABLE, THE DRAWING OR DOCUMENT, OR ANY INFORMATION OR KNOW-HOW EMBODIED THEREIN, TO ANY THIRD PARTY AND (2) NOT TO REPRODUCE OR USE THE DRAWING OR DOCUMENT TO MANUFACTURE ANY APPARATUS OR DEVICE, WITHOUT THE PRIOR WRITTEN AUTHORIZATION OF HARSCO.

NOMINAL SIZE RANGE OVER	TO	INCH PLUS OR MINUS 2 PLACE DECIMAL	3 PLACE DECIMAL	NOMINAL SIZE RANGE OVER	TO	METRIC PLUS OR MINUS 1 PLACE DECIMAL	2 PLACE DECIMAL
0	6	.03	.005	0	150	.8	.13
6	24	.04	.008	150	600	1.0	.20
24	-	.06	.010	600	-	1.5	.25

UNLESS OTHERWISE SPECIFIED ALL MACHINED SURFACES WILL HAVE:
A SURFACE FINISH OF 125 MICRONCHES
ANGULAR TOLERANCE OF ± 30'
CONCENTRICITY WITHIN .015

THIRD ANGLE PROJECTION

UNLESS OTHERWISE SPECIFIED, ALL WELDS SHOULD ADHERE TO THE MOST CURRENT A.W.S WELDING STANDARDS

CHANGE	R/L	REVISION	DR	DATE
EC501889	F	IT 1420 WAS 4016555	GMM	8/31/11
EC502799	G	ADD 1550	BPA	1/30/12

Description: HYDRAULIC INTERCONNECT

HARSCO RAIL

Material: MARK IV

Size: E

Weight: SOLID EDGE DRAWING

Drawn: jdueehlmeyer

Date Drawn: 1/20/2011

DO NOT SCALE

Part Number: 5004704

Sheet: 2 of 2

Plotted by jdueehlmeyer on 1/25/2011 5004704.dft

ITEM	PART NO	QTY	DESCRIPTION
10	B9529Y01	2	D06 FLOW REGULATOR
20	L424015	4	ADAPT, -16 ORB/JIC USE F016074
30	L423036	1	STR ADAP THD BOSS TO J USE
40	F022270	2	DC-ELB90 16X20SAE
50	A4490Y07	2	VALVE,3POS,4-WAY,24VDC,D08
60	A0963Y01	1	D08 MANIFOLD (2 STATION)
70	F014252	2	DC-ELB90 16X16SAE
80	F015209	12	SKT HD CAP SCR 1/2-13 X 6 ZP
90	A0061028	12	1/2 HI COLLAR LOK WSHR

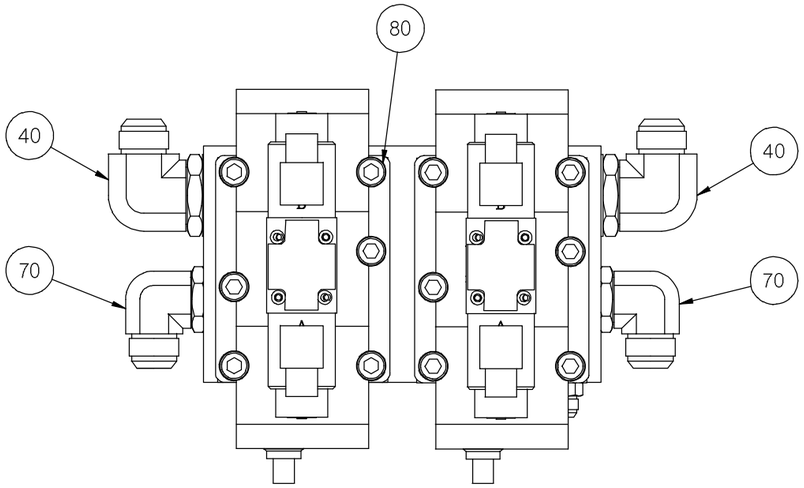

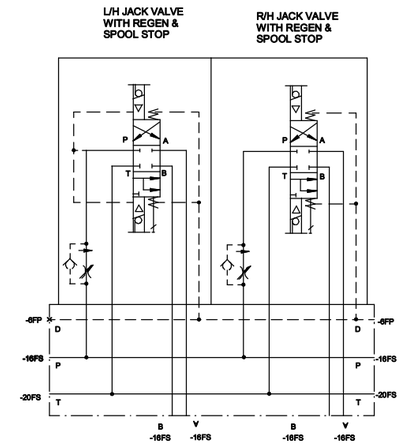

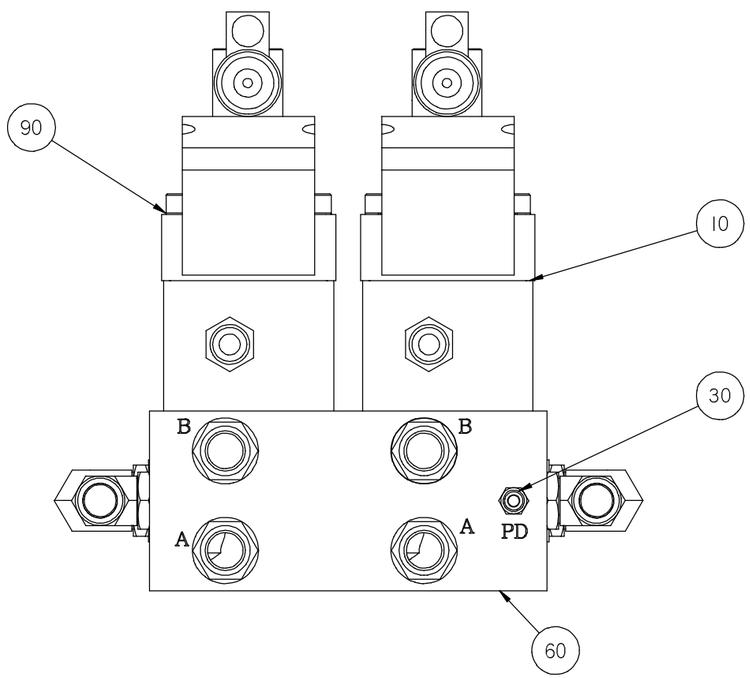

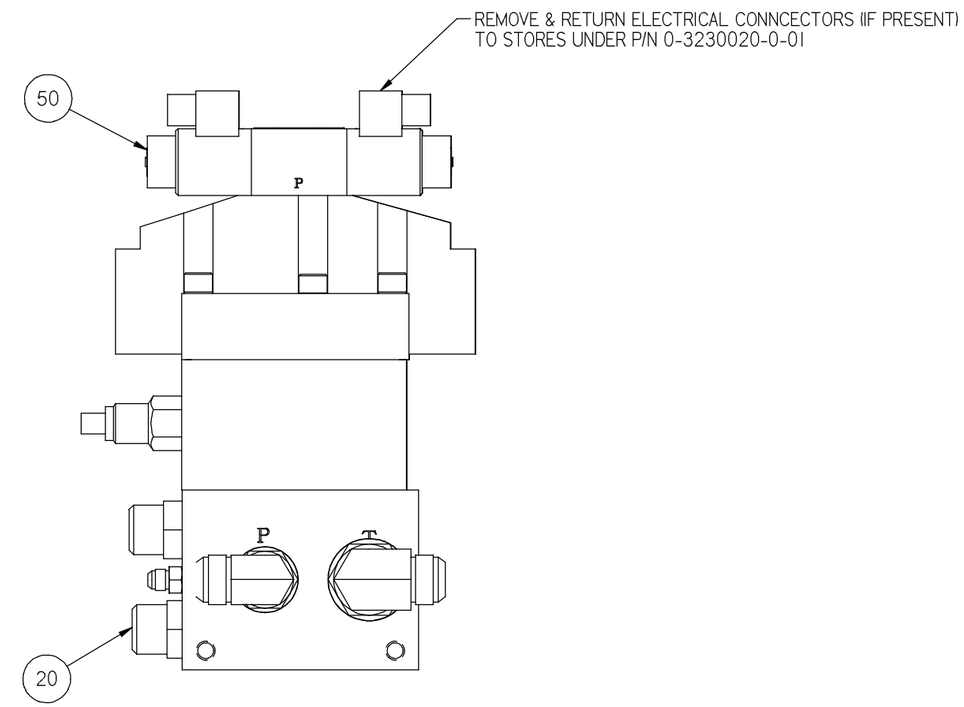

Inch
[mm]

CONFIDENTIAL
© COPYRIGHT 2011 HARSCO. THIS DRAWING OR DOCUMENT IS THE PROPERTY OF HARSCO AND EMBODIES CONFIDENTIAL INFORMATION, TRADE SECRET INFORMATION, AND/OR KNOW-HOW THAT IS THE PROPERTY OF HARSCO. BY ACCEPTING THIS DRAWING OR DOCUMENT, THE RECIPIENT AGREES (1) NOT TO PROVIDE, OR OTHERWISE MAKE AVAILABLE, THE DRAWING OR DOCUMENT, OR ANY INFORMATION OR KNOW-HOW EMBODIED THEREIN, TO ANY THIRD PARTY AND (2) NOT TO REPRODUCE OR USE THE DRAWING OR DOCUMENT TO MANUFACTURE ANY APPARATUS OR DEVICE, WITHOUT THE PRIOR WRITTEN AUTHORIZATION OF HARSCO.

NOMINAL SIZE RANGE OVER	TO	INCH PLUS OR MINUS 2 PLACE DECIMAL	3 PLACE DECIMAL
0	6	.03	.005
6	24	.04	.008
24	-	.06	.010

NOMINAL SIZE RANGE OVER	TO	METRIC PLUS OR MINUS 1 PLACE DECIMAL	2 PLACE DECIMAL
0	150	.8	.13
150	600	1.0	.20
600	-	1.5	.25

UNLESS OTHERWISE SPECIFIED ALL MACHINED SURFACES WILL HAVE:
A SURFACE FINISH OF 125 MICROINCHES
ANGULAR TOLERANCE OF +- .87
CONCENTRICITY WITHIN .010

THIRD ANGLE PROJECTION

UNLESS OTHERWISE SPECIFIED, ALL WELDS SHOULD ADHERE TO THE MOST CURRENT A.W.S WELDING STANDARDS

CHANGE	R/L	REVISION	DR	DATE
EC501489	E	SE DRAFT CREATED AND TORQUE VALUE REMOVED	SHH	09-12-11

Description: JACK REGEN VALVE ASSY

HARSCO RAIL

Material: -; -
Machine Type: MARK IV
Size: D
Weight: 0.0 lbm
Drawn: shol
Date Drawn: 9/8/2011
Part Number: C9087VAA
Sheet: 1 of 1

SOLID EDGE DRAWING — DO NOT SCALE

ENG.DWG.NO.
C9095WAH

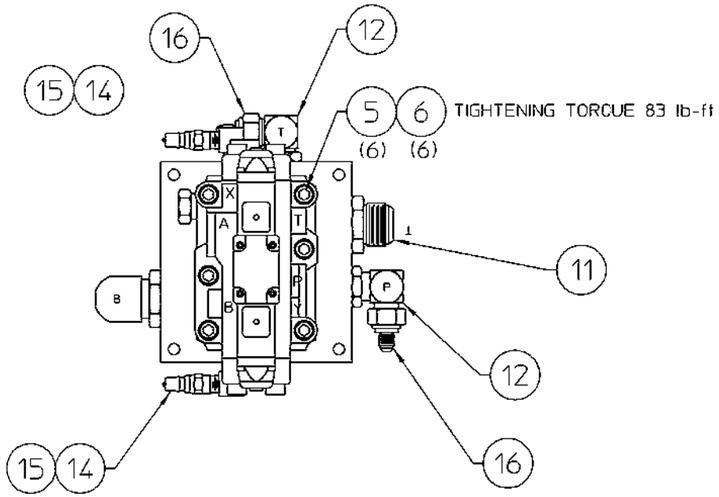

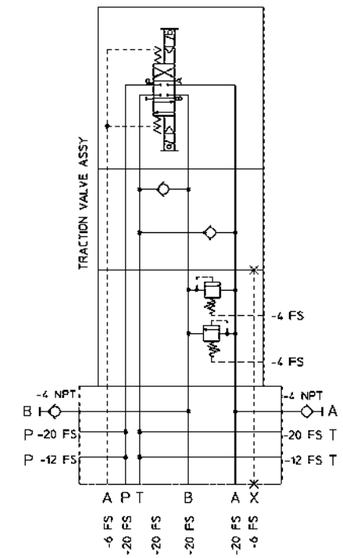

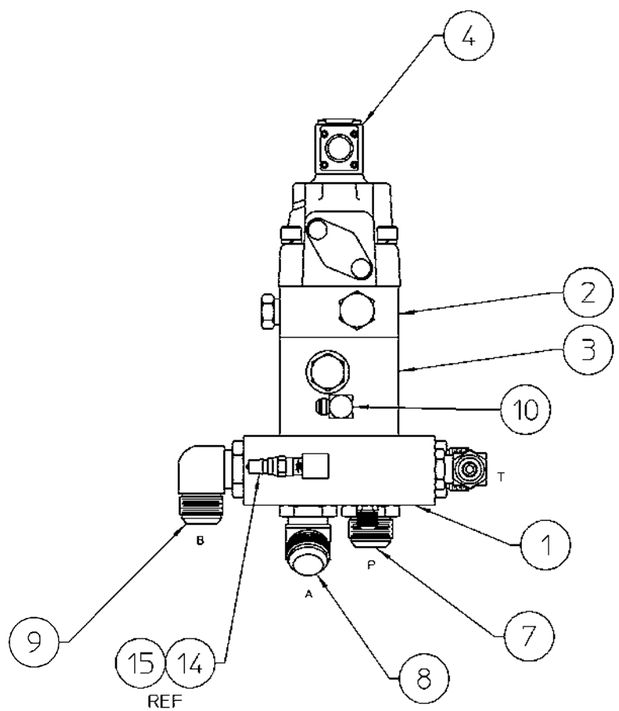

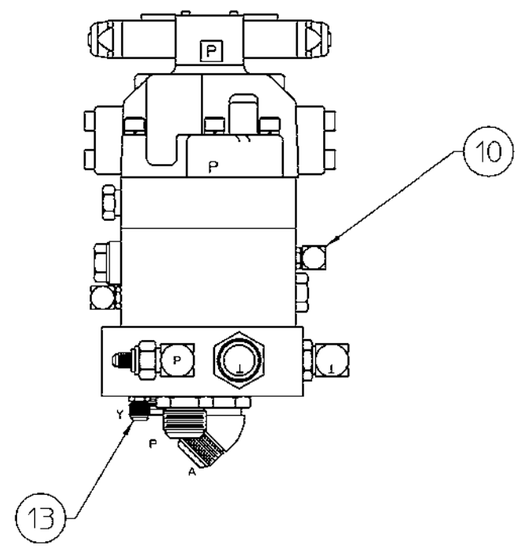

REVISIONS

NO	ER	DESCRIPTION	ZONE	DR	CK	APP	MF
1	8036.10	NEW RELEASE		JRF	JGA		
2	8036.15	ITEM 3 WAS 0-3334057-0-05		JRF	DGV	APD	
3	8424.1	ITEM 14 & 15 ADDED		JBR	DGV	JRF	
4	10373.1	ITEM 7 WAS D6598P43	C3	JRF	JGA	APD	
5	11220.1	ITEM 3 PIC~ORAL UPDATE		LES	HWJ	WHC	
6	113213	ITEM 12 P/N WAS L411939 ITEM 16 ADDED	C1 P/L	LES	DGV	JBR	
7	1171153	ITEM 2 P/N WAS C8214YAA	P/L	LES	HWJ	AML	

FIG NO.	ITEM NO.	PART NUMBER	DESCRIPTION AND MATERIAL SIZE (REF.ONLY)	QTY
	16	0-3304132-0-05	ADAPTER 3/4 JIC-3/8 JIC RED	2
	15	L420087	1/4 NPT X 90°	2
	14	L41228	1/4 MALE QUICK DISC.	2
	13	L425696	ADAPTER 3/8 ORB-1/2 JIC STR	1
	12	L422762	ADAPTER 3/4 ORB-3/4 JIC 90°	2
	11	0-3304028-0-29	ADAPTER 1 1/4 ORB-1 1/2 JIC STR.	1
	10	L425932	ADAPTER 1/4 O-RING - 1/4 JIC 90°	2
	9	L422763	ADAPTER 1 1/4 ORB-1 1/4 JIC 90°	1
	8	0-3304115-0-12	ADAPTER 1 1/4 ORB-1 1/4 JIC 45°	1
	7	L423021	ADAPTER 1 1/4 ORB-1 1/4 JIC	1
	6	A0061028	1/2 HIGH COLLAR LOCK WASHER	6
	5	A0041219	1/2-13 X 8" SOC HD CAP SCR	6
	4	A4490Y03	VALVE, HYD. D08 DBL. SOL.	1
	3	0-3334057-0-07	RELIEF VALVE SANDWICH (D08)	1
	2	A2803Y04	CHECK VALVE SANDWICH (D08)	1
	1	D6328X01	SUBPLATE D08 1 1/4 O-RING BOSS	1

IMPLIED TOLERANCES
ALL DIMENSIONS ARE IN INCHES-TOLERANCE UNLESS OTHERWISE SPECIFIED

NOMINAL SIZE RANGE		PLUS OR MINUS			NOMINAL SIZE RANGE		PLUS OR MINUS		
OVER	TO	FRACTION	2 PLACE DECIMAL	3 PLACE DECIMAL	OVER	TO	FRACTION	2 PLACE DECIMAL	3 PLACE DECIMAL
-	1	1/64	.01	.003	6	24	3/64	.03	.008
1	6	1/32	.02	.005	24	-	1/16	.05	.010

ANGULAR DIMENSIONS PLUS OR MINUS 1 DEGREE

√ ALL MACHINED SURFACES TO HAVE A SURFACE FINISH OF 125 MICRONICHES UNLESS OTHERWISE SPECIFIED.

WELDING SPECIFICATION

UNLESS OTHERWISE SPECIFIED ALL WELDS SHOULD ADHERE TO FAIRMONT TAMPER WELDING SPECIFICATION NO. 101

WEIGHT lbs.

3rd ANGLE PROJECTION

DO NOT SCALE

SHEET 1 CONT. ON –

DESCRIPTION 124: REAR TRACTION VALVE ASSY

DRAWN FIFER	DATE 12-11-96	MACHINE TYPE MARK IV (97)
CHECKED JA	DATE 1-8-97	
APP-ENG AD	DATE 1-9-97	
APP-MFG	DATE	
LAST ECR 1171: .53	CHECKED JGA DATE 5-Feb-97	ENG.DWG.NO. C9095WAH

Fairmont Tamper™
2601 Edmund Road-Box 20
Cayce-West Columbia
South Carolina 29171-0020
(803) 822-9160

THIS DOCUMENT CONTAINS PROPRIETARY INFORMATION AND SUCH INFORMATION MAY NOT BE DISCLOSED TO OTHERS FOR ANY PURPOSE OR USED FOR MANUFACTURING PURPOSES WITHOUT THE WRITTEN PERMISSION OF FAIRMONT TAMPER.

ENG.DWG.NO.
C9101VAA

REVISIONS							
NO	ER	DESCRIPTION	ZONE	DR	CK	APP	NF
1	6760 225	NEW RELEASE REPLACES C7336VAA					
2	6496.1	ITEM 10 WAS L420150 QTY 8 ITEM 13 ADDED	E6	MLT	JGA	APD	
3	7995.1	ITEM 10 QTY WAS 6 ITEM 13 QTY WAS 6 ITEM 11 QTY WAS 4	P/L	LES	DGV	WHC	
4	11090.1	UPDATED PICTORAL		LES	HWJ	WHC	
5	11711.30	ITEM 7 P/N WAS A0041058 ITEM 9 P/N WAS A0041217	P/L	LES	DGV	JBR	

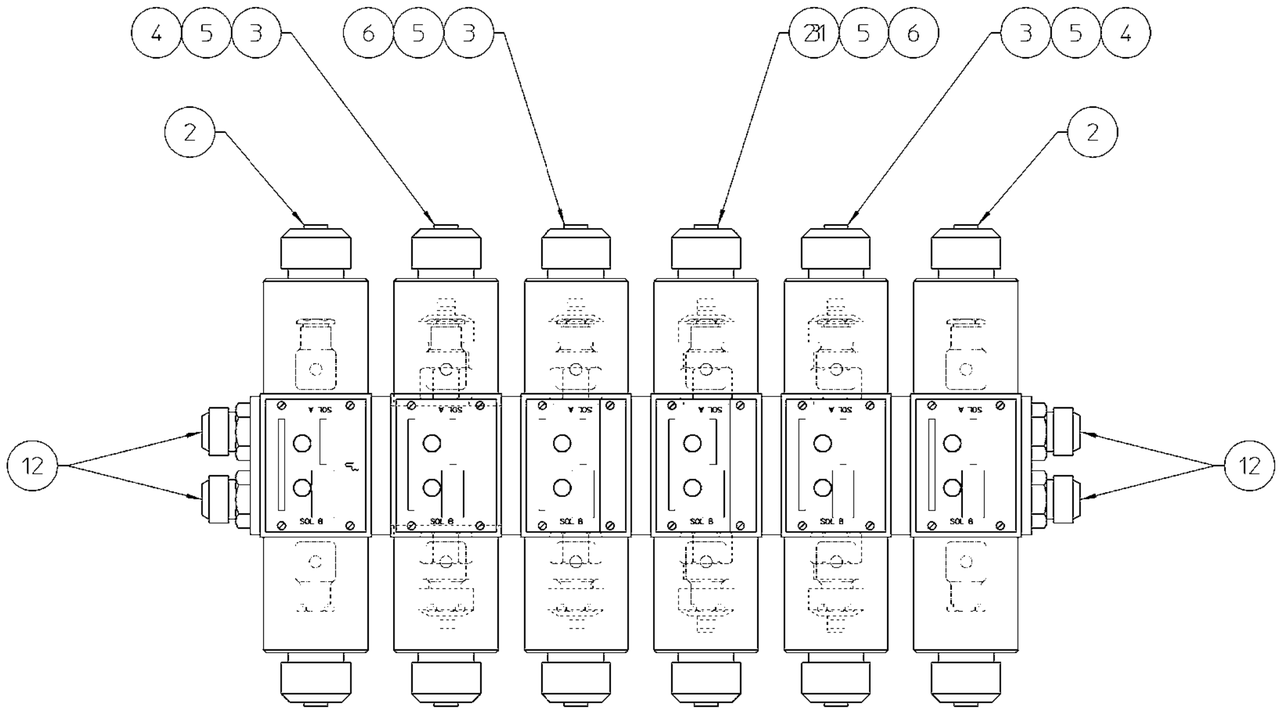

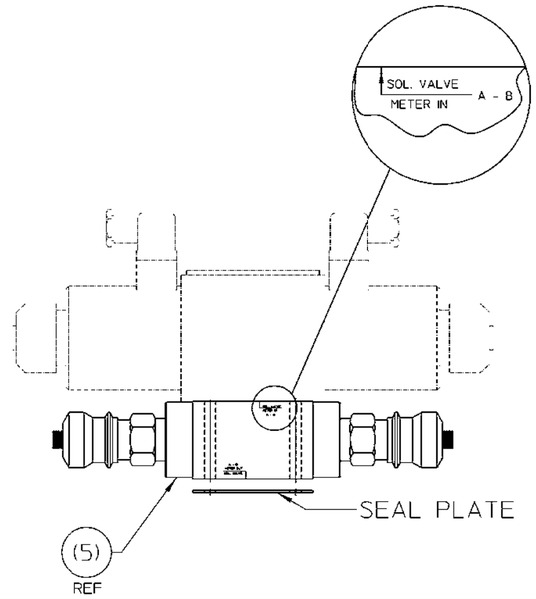

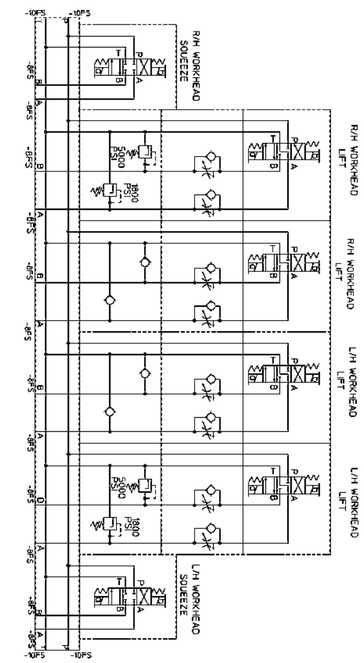

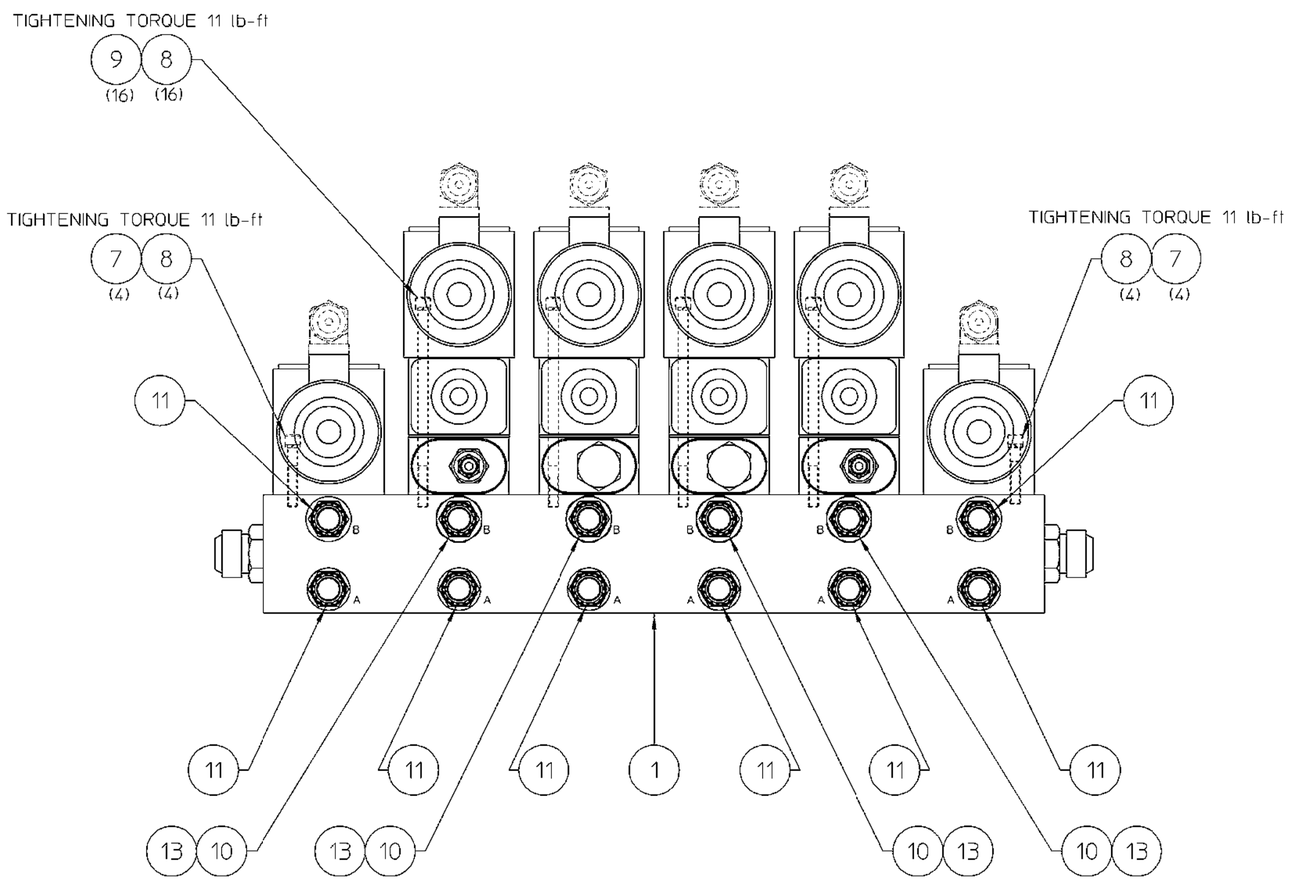

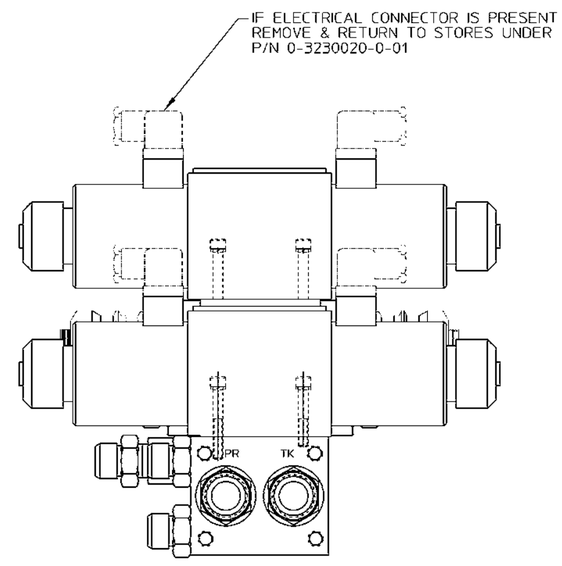

FIG NO.	ITEM NO.	PART NUMBER	DESCRIPTION AND MATERIAL SIZE (REF.ONLY)	QTY
	13	L411383	1/2 MP X 3/4 JIC STR	4
	12	L424351	3/4 O-RING BOSS X 1" JIC STR	4
	11	L424556	1/2 O-RING BOSS X 3/4 JIC STR	8
	10	D2093Y01	1/2 O-RING BOSS X FP STR	4
	9	A0041054	1/4-20 UNC X 5 LG SHCS	16
	8	A0061027	1/4 HIGH COLLAR LOCKWASHER	24
	7	A0041045	1/4-20 UNC X 1 1/2 LG SHCS	8
	6	0-3336002-0-01	ANTICAV CHECK SWCH D05	2
	5	0-3335024-0-12	PRESS COMP FLOW CONTRO_	4
	4	A1070Y19	D05 RELIEF VALVE SANDWICH	2
	3	0-3333037-0-19	SOL DIR VALVE (3POS/4WAY)	4
	2	0-3333037-0-09	SOL DIR VALVE (3POS/4WAY)	2
	1	0-3360012-0-05	INLINE BAR MANIFOLD (6 STAT)	1

IMPLIED TOLERANCES
ALL DIMENSIONS ARE IN INCHES-TOLERANCE UNLESS OTHERWISE SPECIFIED

NOMINAL SIZE RANGE OVER	TO	PLUS OR MINUS FRACTION	2 PLACE DECIMAL	3 PLACE DECIMAL	NOMINAL SIZE RANGE OVER	TO	PLUS OR MINUS FRACTION	2 PLACE DECIMAL	3 PLACE DECIMAL
-	1	1/64	.01	.003	6	24	3/64	.03	.008
1	6	1/32	.02	.005	24	-	1/16	.05	.010

ANGULAR DIMENSIONS PLUS OR MINUS 1 DEGREE
ALL MACHINED SURFACES TO HAVE A SURFACE FINISH OF 125 MICROINCHES UNLESS OTHERWISE SPECIFIED.

WELDING SPECIFICATION
UNLESS OTHERWISE SPECIFIED ALL WELDS SHOULD ADHERE TO FAIRMONT TAMPER WELDING SPECIFICATION NO. 101

WEIGHT lbs
3rd ANGLE PROJECTION
DO NOT SCALE
SHEET 1 CONT. — OF —

DESCRIPTION 1/4: W/H VALVE ASSY
DRAWN MLT DATE 11/9/92
CHECKED DVG DATE 12/2/92
APP-ENG AOL DATE 12/1/92
APP-MFG DATE
LAST EDR 11711.30
CHECKED DVGD DATE 28-Jan-20
MACHINE TYPE MARK IV
Fairmont Tamper 2461 Edward Road-Box 30 Cargo-West Columbus South Carolina 29819-0020 (803) 822-9460
ENG.DWG.NO. C9101VAA

THIS DOCUMENT CONTAINS PROPRIETARY INFORMATION AND SUCH INFORMATION MAY NOT BE DISCLOSED TO OTHERS FOR ANY PURPOSE OR USED FOR MANUFACTURING PURPOSES WITHOUT THE WRITTEN PERMISSION OF FAIRMONT TAMPER.

ENG.DWG.NO.
C9102WAA

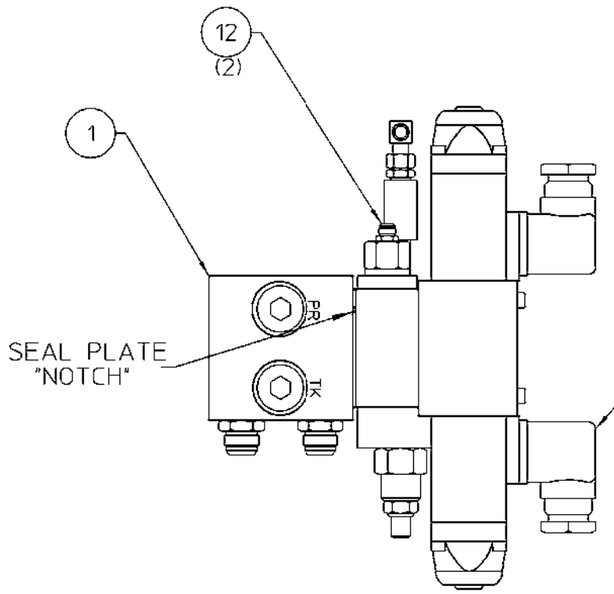

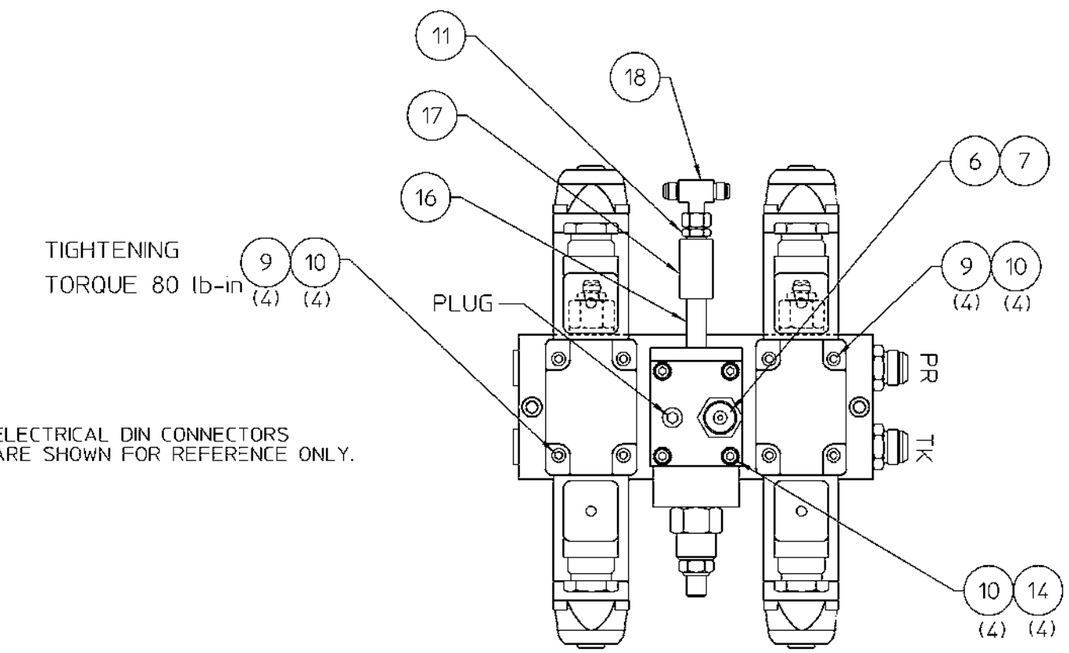

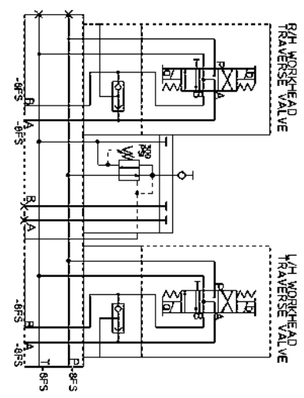

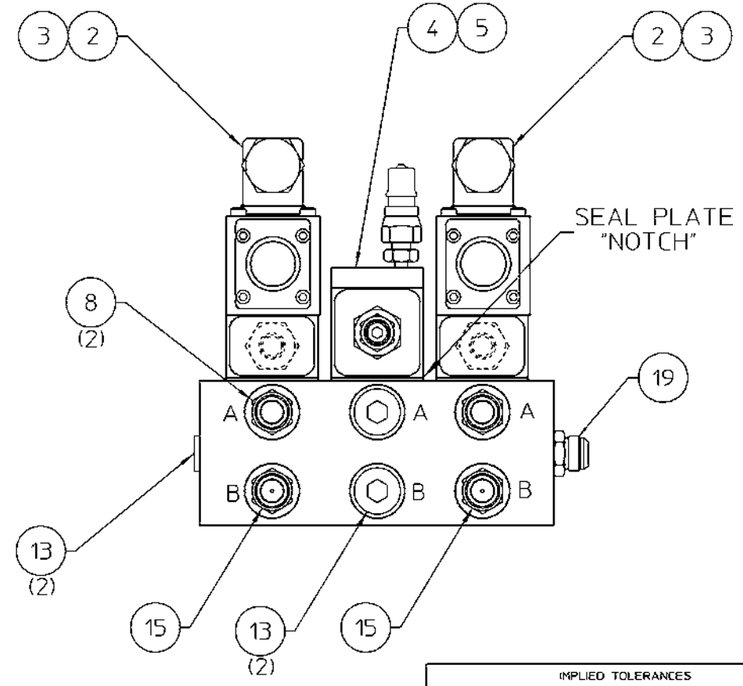

REVISIONS

NO	ER	DESCRIPTION	ZONE	DR	CK	APP	MF
1	5860 .225	NEW RELEASE. REPLACES C7369WAA.					
2	6360 .1	ADDED ITEMS 16 - 18		CJW	DGV	APD	
	6713 .1	IT.1 WAS 0-3364012-0-02					
3	6713 .2	IT.1 WAS 0-3364012-0-10		LES	DGV		
4	6447 .37	IT.15 WAS 0-3304175-0-01		LES	DGV		
5	6447 .46	IT.15 WAS 0-3304175-0-02	P/L	JRF			
6	7165	IT 8 QTY WAS 4. ADDED IT 19. 4 OCT 94		AO			

FIG NO.	ITEM NO.	PART NUMBER	DESCRIPTION AND MATERIAL SIZE (REF.ONLY)	QTY
	19	L424556	ADAPTER 1/2 O-RING-3/4 JIC ST	2
	18	0-3304057-0-09	SW BR TEE. -8 JIC-JIC-JIC SW	1
	17	L41251	COUPLING, 1/4 FP-FP	1
	16	L41079	NIPPLE, 1/4 MP-MP	1
	15	0-3304175-0-11	ORIFICE FITTING -8-JIC-O-RING	2
	14	A0041194	SOC HD CAP SCR 10-24X2 1/4	4
	13	0-3304203-0-04	SOC HD O-RING PLUG 1/2	4
	12	0-3304028-0-36	ADAPTER 1/4 O-RING - 1/2 JIC	2
	11	L411381	ADAPTER 1/4 MP- 1/2 JIC STR	1
	10	A0061025	#10 HIGH COLLAR LOCK WASHER	12
	9	A0041195	SOC HD CAP SCR 10-24X3 1/4	8
	8	L420150	ADAPTER 1/2 O-RING-JIC STR	2
	7	L41228	QUICK DISCONNECT 1/4 FP	1
	6	L423299	ADAPTER 1/4 MP-1/8MP	1
	5	0-3360011-0-06	MANIFOLD BLANKING PLT	1
	4	C0613Y01	REDUCING/RELIEVING SANDWICH	1
	3	C0674Y01	D03 LOAD SENSING SANDWICH	2
	2	C0993Y03	(D03) HYD VALVE 3 POS,4-WAY	2
	1	0-3364012-0-02	MANIFOLD, D01, 3 STATION	1

IMPLIED TOLERANCES
ALL DIMENSIONS ARE IN INCHES-TOLERANCE UNLESS OTHERWISE SPECIFIED

NOMINAL SIZE RANGE OVER	TO	PLUS OR MINUS FRACTION	2 PLACE DECIMAL	3 PLACE DECIMAL	NOMINAL SIZE RANGE OVER	TO	PLUS OR MINUS FRACTION	2 PLACE DECIMAL	3 PLACE DECIMAL
-	1	1/64	.01	.003	6	24	3/64	.03	.008
1	6	1/32	.02	.005	24	-	1/16	.05	.010

ANGULAR DIMENSIONS PLUS OR MINUS 1 DEGREE

√ ALL MACHINED SURFACES TO HAVE A SURFACE FINISH OF 125 MICROINCHES UNLESS OTHERWISE SPECIFIED.

WELDING SPECIFICATION

UNLESS OTHERWISE SPECIFIED ALL WELDS SHOULD ADHERE TO FAIRMONT TAMPER WELDING SPECIFICATION NO. 101

WEIGHT lbs.

3rd ANGLE PROJECTION

DO NOT SCALE

SHEET 1 CONT. — ON —

DESCRIPTION (24): W/H TRAVERSE VALVE ASSY

DRAWN M TRIPPE	DATE 11/9/92	MACHINE TYPE MARK IV	
CHECKED DGV	DATE 12-2-92	Fairmont Tamper	2401 Edmund Road-Box 20 Cayce-West Columbia, South Carolina 29171-0020 (803) 822-9460
APP-ENG TD	DATE 12-1-92		
APP-MFG	DATE		
LAST ECR. 7165. 1	CHECKED dvgn	ENG.DWG.NO. C9102WAA	
	DATE 12-Oct-94		

THIS DOCUMENT CONTAINS PROPRIETARY INFORMATION AND SUCH INFORMATION MAY NOT BE DISCLOSED TO OTHERS FOR ANY PURPOSE OR USED FOR MANUFACTURING PURPOSES WITHOUT THE WRITTEN PERMISSION OF FAIRMONT TAMPER.

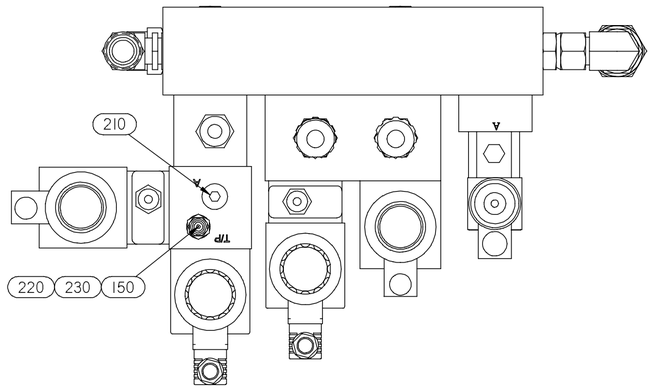

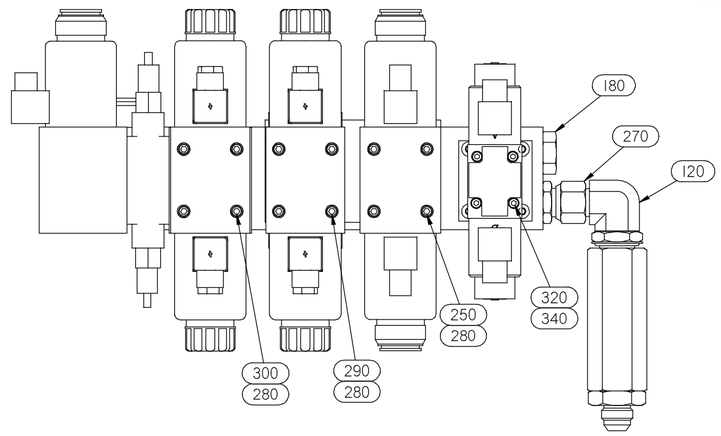

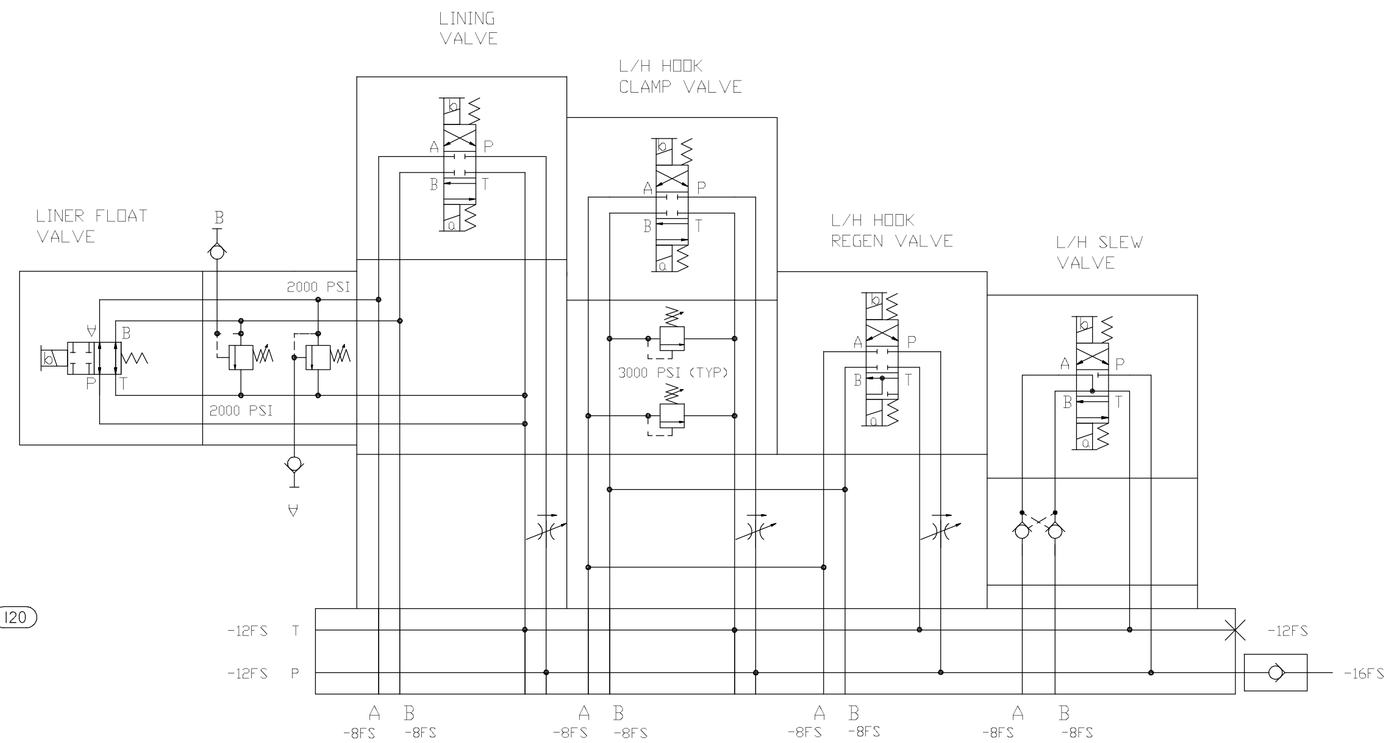

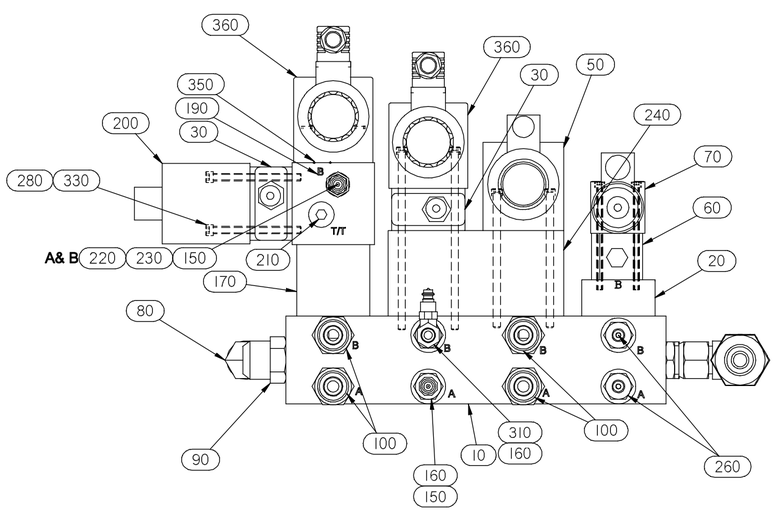

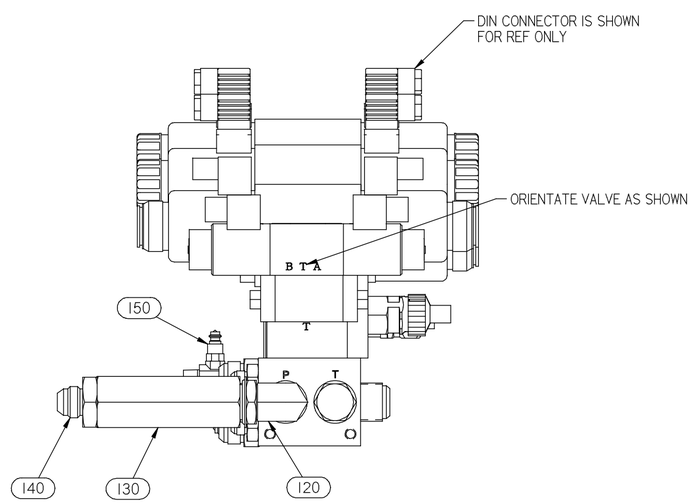

10	A0757Y04	BAR MANIFOLD D05	1
20	0-3360011-0-03	D05 TO D03 ADAPTER	1
30	A1070Y19	DUAL RELIEF SAND	2
50	0-3333037-0-18	VALVE,3POS,4-WAY,24VDC,D05	1
60	0-3336024-0-07	PO CHECK D03	1
70	C0993Y03	HYDRAULIC VALVE	1
80	F0141172	ELB90 16X12SAE	1
90	F0144827	STR 16X12SAE	1
100	F0182115	STR 12X8SAE	4
120	F0119288	ELB90 12X16SAE	1
130	0-3336021-0-18	CHECK VALVE 1 ORB	1
140	F0115537	DC-STR 12X16SAE	1
150	L41228	1/4 MALE QUICK DISC	4
160	G5787Y02	STR 6X8SAE	2
170	0-3335024-0-11	PRESSURE COMP FLOW REG	1
180	F0141165	DC-PLG 12SAE HH *	1
190	C3759W02	D05 FLOAT MANIFOLD	1
200	0-3333037-0-08	VALVE,2POS,4-WAY,24VDC,D05	1
210	0-3304203-0-03	3/8 O-RING BOSS PLUG	2
220	L425372	3/8 ORBX 1/4 NPT(F)	2
230	F0111074	DC-STR 4NPTX4NPT	2
240	H2247Y01	DUAL FLOW REG ASSY	1
250	F026066	HEX SKT HD CS 1/4-20X4 1/2 BKO	4
260	F022261	STR -4 X -8 SAE	2
270	F023110	DC-STR 12FSX12SAE	1
280	F012241	LW .250 HI COLLAR	16
290	A0041218	SKT HD CS .250-20 X 6	4
300	A0041224	SKT HD CS .250-20 X 7	4
310	A1299Y02	TEE, MP/MP/FP	1
320	A0041024	SOC HD CP SCR #10-24 X 3 1/2	4
330	173797	1/4-20 X 3.00 SOCHD C SCR	4
340	A0061025	#10, HIGH COLLAR LOCK WASHER	4
350	0-3391007-0-14	O-RING	5
360	0-3333037-0-09	REXROTH (D05) HYDRAULIC VALVE	2

ASSEMBLY NOTES:
1. USE ORING LUBE ON ALL SEALS.
2. TORQUE ALL FASTENERS AND FITTINGS TO THE APPROPRIATE VALUE.

Inch
[mm]

CONFIDENTIAL
© COPYRIGHT 2011 HARSCO. THIS DRAWING OR DOCUMENT IS THE PROPERTY OF HARSCO AND EMBODIES CONFIDENTIAL INFORMATION, TRADE SECRET INFORMATION, AND/OR KNOW-HOW THAT IS THE PROPERTY OF HARSCO. BY ACCEPTING THIS DRAWING OR DOCUMENT, THE RECIPIENT AGREES (1) NOT TO PROVIDE, OR OTHERWISE MAKE AVAILABLE, THE DRAWING OR DOCUMENT, OR ANY INFORMATION OR KNOW-HOW EMBODIED THEREIN, TO ANY THIRD PARTY AND (2) NOT TO REPRODUCE OR USE THE DRAWING OR DOCUMENT TO MANUFACTURE ANY APPARATUS OR DEVICE, WITHOUT THE PRIOR WRITTEN AUTHORIZATION OF HARSCO.

NOMINAL SIZE RANGE OVER	TO	INCH PLUS OR MINUS 1 PLACE DECIMAL	2 PLACE DECIMAL
0	6	.03	.005
6	24	.04	.005
24	-	.06	.010

NOMINAL SIZE RANGE OVER	TO	METRIC PLUS OR MINUS 1 PLACE DECIMAL	2 PLACE DECIMAL
0	150	.8	.10
150	600	1.0	.20
600	-	1.5	.25

UNLESS OTHERWISE SPECIFIED ALL MACHINED SURFACES SHALL BE FINISHED A SURFACE FINISH OF 125 MICROINCHES ANGULAR TOLERANCE OFF ± 30' CONCENTRICITY WITHIN .010

THIRD ANGLE PROJECTION

UNLESS OTHERWISE SPECIFIED, ALL WELDS SHOULD ADHERE TO THE MOST CURRENT AJWS WELDING STANDARDS

CHANGE	R/L	REVISION	DR	DATE
EC501723	D	290 WAS A0041056, 250 WAS A0041197	BPA	8/9/11

Description: LINER & CLAMP VALVE ASSY

HARSCO RAIL

Material: -; -
Weight: 137.2 lbm
Machine Type: MKIV
Drawn: badler
Date Drawn: 8/9/2011
Part Number: C9104VAB
Size: E
Sheet: 1 of 1

SOLID EDGE DRAWING — DO NOT SCALE

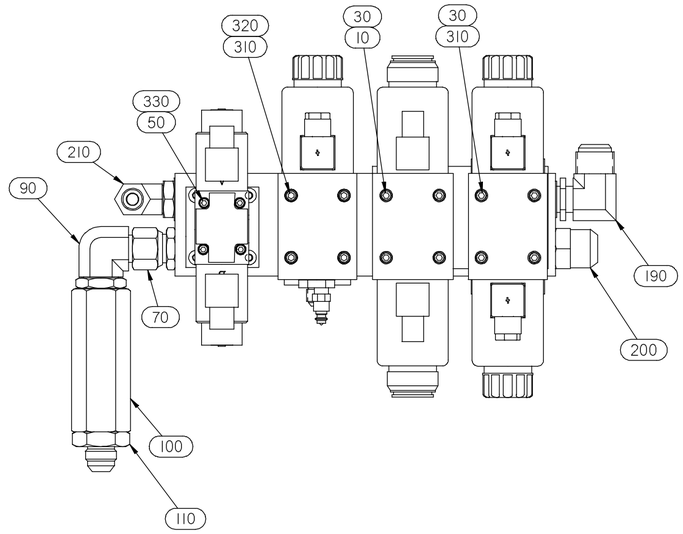

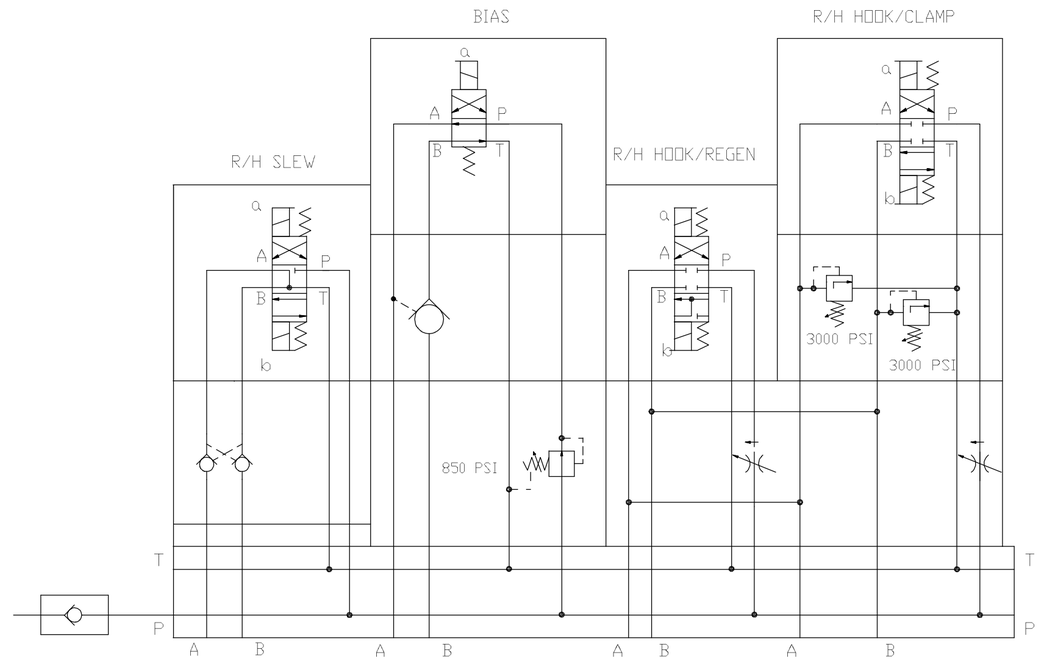

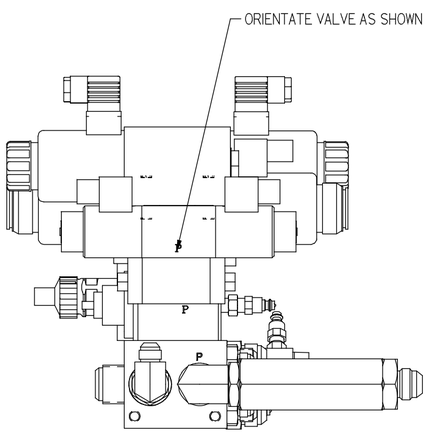

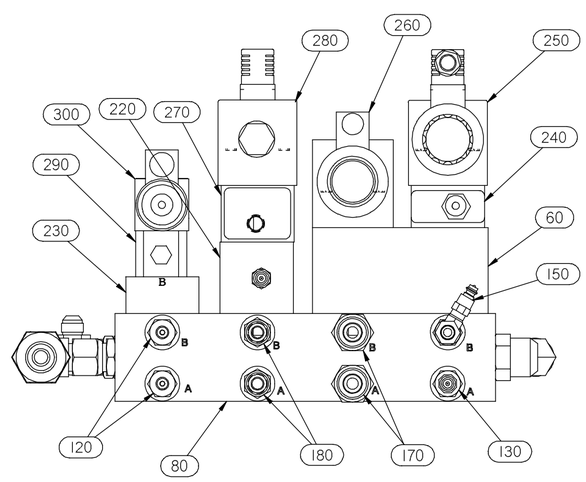

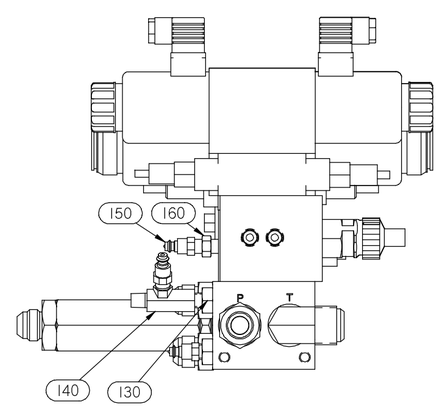

10	F026066	HEX SKT HD CS 1/4-20X4 1/2 BKO	4
50	F023899	SKT HD CS #10(.190)-24X3 1/2 B	4
60	H2247Y01	DUAL FLOW REG ASSY	1
70	F023110	DC-STR 12FSX12SAE	1
80	A0757Y04	BAR MANIFOLD D05	1
90	F019288	ELB90 12X16SAE	1
100	0-3336021-0-18	CHECK VALVE 1 ORB	1
110	F015537	DC-STR 12X16SAE	1
120	F022261	STR -4 X -8 SAE	2
130	G5787Y02	STR 6X8SAE	2
140	A1299Y02	TEE, MP/MP/FP	1
150	L41228	1/4 MALE QUICK DISC	3
160	F011074	DC-STR 4NPTX4NPT	1
170	F018215	STR 12X8SAE	2
180	F013516	STR 8X8SAE	2
190	F014172	ELB90 16X12SAE	1
200	F014827	STR 16X12SAE	1
210	F040294	DC-ELB90 8X12SAE	1
220	0-3334013-0-05	PRESSURE REDUCING VALVE D05	1
230	0-3360011-0-03	D05 TO D03 ADAPTER	1
240	A1070Y19	DUAL RELIEF SAND	1
250	0-3333037-0-09	REXROTH (D05) HYDRAULIC VALVE	1
260	0-3333037-0-18	VALVE,3POS,4-WAY,24VDC,D05	1
270	0-3336003-0-02	PO CHECK D05	1
280	0-3333037-0-10	REXROTH (D05) HYDRAULIC VALVE	1
290	0-3336024-0-07	PO CHECK D03	1
300	C0993Y03	HYDRAULIC VALVE	1
310	A0041218	SKT HD CS .250-20 X 6	8
320	A0061027	1/4 HIGH COLLAR LOCK WASHER	12
330	A0061025	#10, HIGH COLLAR LOCK WASHER	4

ASSEMBLY NOTES:
1. APPLY ORING LUBE TO ALL SEALS
2. TORQUE ALL FASTENERS AND FITTINGS TO APPROPRIATE VALUES

Inch
[mm]

CONFIDENTIAL
© COPYRIGHT 2011 HARSCO. THIS DRAWING OR DOCUMENT IS THE PROPERTY OF HARSCO AND EMBODIES CONFIDENTIAL INFORMATION, TRADE SECRET INFORMATION, AND/OR KNOW-HOW THAT IS THE PROPERTY OF HARSCO. BY ACCEPTING THIS DRAWING OR DOCUMENT, THE RECIPIENT AGREES (1) NOT TO PROVIDE, OR OTHERWISE MAKE AVAILABLE, THE DRAWING OR DOCUMENT, OR ANY INFORMATION OR KNOW-HOW EMBODIED THEREIN, TO ANY THIRD PARTY AND (2) NOT TO REPRODUCE OR USE THE DRAWING OR DOCUMENT TO MANUFACTURE ANY APPARATUS OR DEVICE, WITHOUT THE PRIOR WRITTEN AUTHORIZATION OF HARSCO.

DECIMAL PLACE RANGE	INCHES PLUS OR MINUS 2 PLACE DECIMAL	3 PLACE DECIMAL	DECIMAL PLACE RANGE	METRIC PLUS OR MINUS 1 PLACE DECIMAL	2 PLACE DECIMAL
OVER TO			OVER TO		
0 6	.03	.005	0 150	.8	.13
6 24	.04	.008	150 600	1.0	.20
24 -	.06	.010	600 -	1.5	.25

UNLESS OTHERWISE SPECIFIED ALL MACHINED SURFACES WILL HAVE:
A MAXIMUM FINISH OF 125 MICROINCHES
ANGULAR TOLERANCE OF ± .87
CONCENTRICITY WITHIN .010

THIRD ANGLE PROJECTION

UNLESS OTHERWISE SPECIFIED, ALL WELDS SHOULD ADHERE TO THE MOST CURRENT A.W.S WELDING STANDARDS

CHANGE	R/L	REVISION	DR	DATE
EC501723	E	10 WAS A0041197, 50 WAS A0041029, 310 WAS A0041056	BPA	8/9/11

Description: BIAS & CLAMP VALVE ASSY

HARSCO RAIL

Material: -;-
Weight: 119.4 lbm
Machine Type: MKIV
Drawn: badler
Date Drawn: 8/9/2011
Part Number: C9112VAC
Size: E
Sheet: 1 of 1

SOLID EDGE DRAWING | DO NOT SCALE

CONFIDENTIAL

© COPYRIGHT 2001 HARSCO TRACK TECHNOLOGIES. THIS DRAWING OR DOCUMENT IS THE PROPERTY OF HARSCO TRACK TECHNOLOGIES AND EMBODIES CONFIDENTIAL INFORMATION, TRADE SECRET INFORMATION, AND/OR KNOW-HOW THAT IS THE PROPERTY OF HARSCO TRACK TECHNOLOGIES. BY ACCEPTING THIS DRAWING OR DOCUMENT, THE RECIPIENT AGREES (1) NOT TO PROVIDE, OR OTHERWISE MAKE AVAILABLE, THE DRAWING OR DOCUMENT, OR ANY INFORMATION OR KNOW-HOW EMBODIED THEREIN, TO ANY THIRD PARTY AND (2) NOT TO REPRODUCE OR USE THE DRAWING OR DOCUMENT TO MANUFACTURE ANY APPARATUS OR DEVICE, WITHOUT THE PRIOR WRITTEN AUTHORIZATION OF HARSCO TRACK TECHNOLOGIES.

SOLID EDGE DRAWING

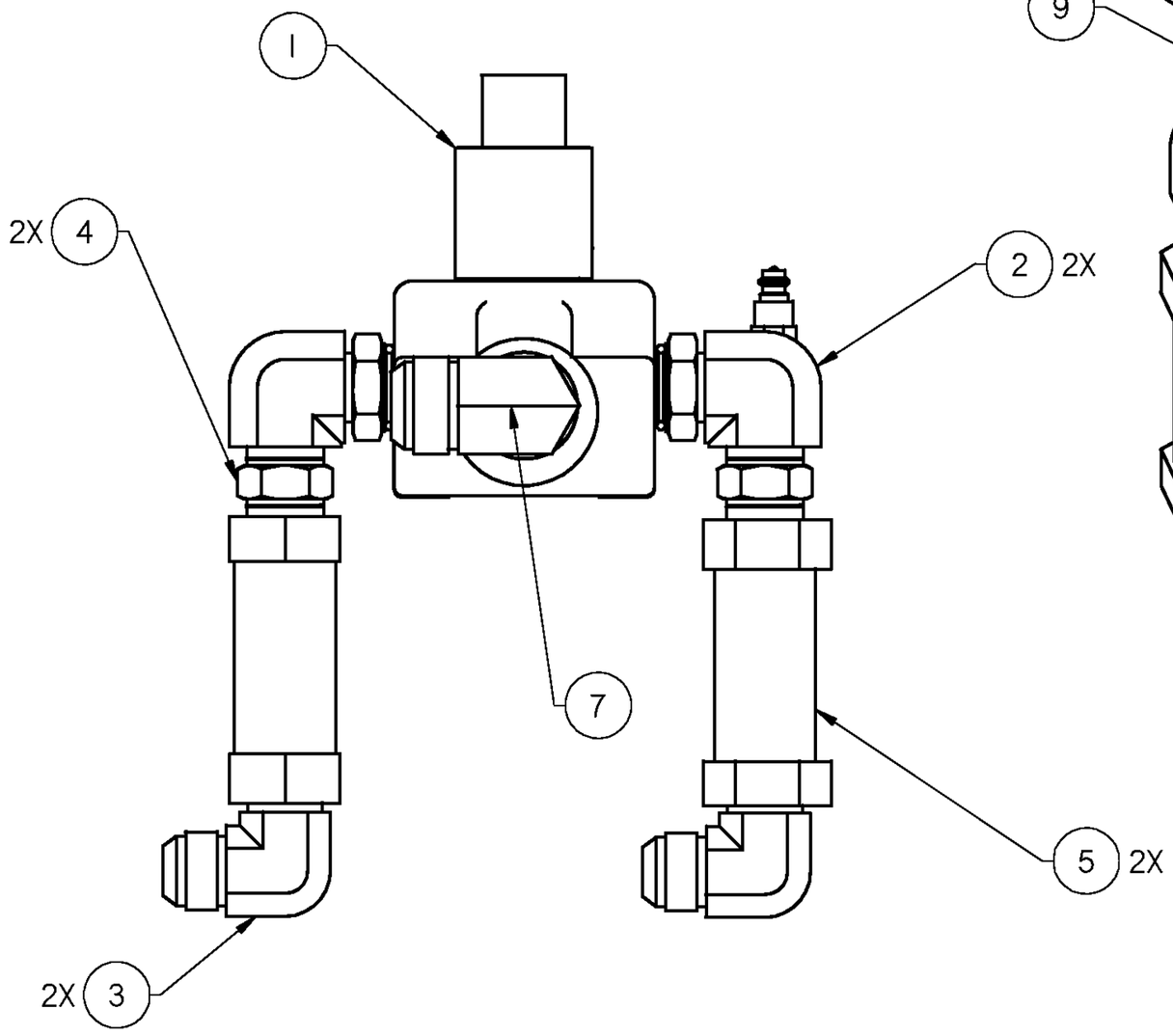

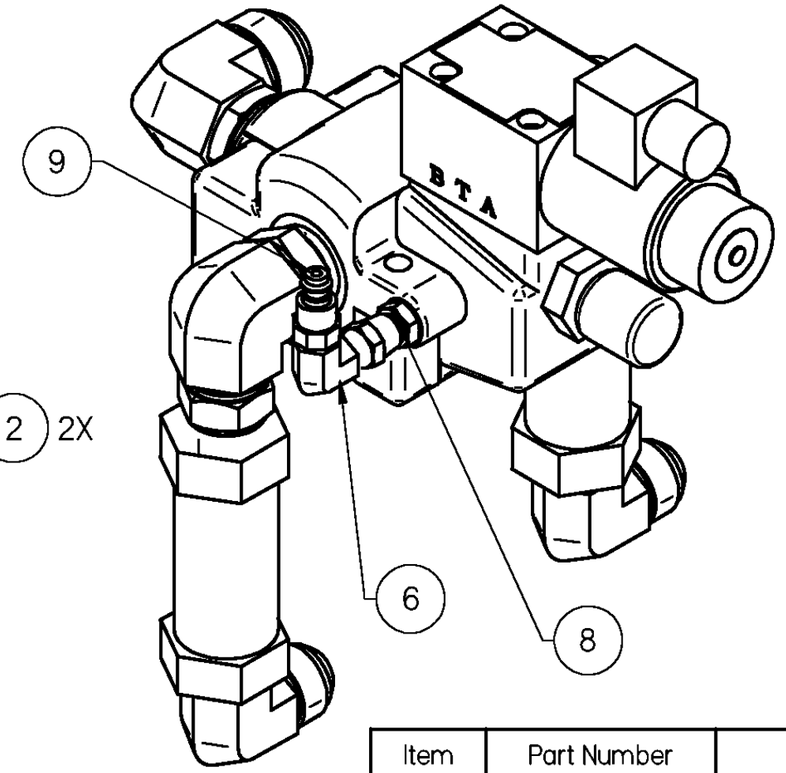

Item Number	Part Number	Description	Quantity
1	C1140Y04	SOL RELIEF VALVE	(1)
2	0-3304000-0-03	ORB/FP ADAPTER 90 DEG	2
3	L420006	ADAPTER, 3/4 JIC - 3/4 MP, 90	2
4	F011234	3/4 PIPE NIPPLE, HEX	2
5	L40549	CHECK VALVE 3/4 NPT-3PSI	2
6	F011937	1/4 MP X -4 JIC 90	1
7	L424285	-12 ORB X -16 JIC 90	1
8	F024731	FTG 1/4 MP X -4 JIC SW	1
9	L41228	1/4 MALE QUICK DISC	1

IMPLIED TOLERANCES

ALL DIMENSIONS ARE IN INCHES - TOLERANCE UNLESS OTHERWISE SPECIFIED

NOMINAL SIZE RANGE		INCH PLUS OR MINUS		NOMINAL SIZE RANGE		METRIC PLUS OR MINUS	
OVER	TO	2 PLACE DECIMAL	3 PLACE DECIMAL	OVER	TO	1 PLACE DECIMAL	2 PLACE DECIMAL
0	6	.03	.005	0	150	.8	.13
6	24	.04	.008	150	600	1.0	.20
24	-	.06	.010	-	600	1.5	.25

UNLESS OTHERWISE SPECIFIED ALL MACHINED SURFACES WILL HAVE;
A SURFACE FINISH OF 125 MICROINCHES
ANGULAR TOLERANCE OF ± .50°
CONCENTRICITY WITHIN .010

THIRD ANGLE PROJECTION

UNLESS OTHERWISE SPECIFIED ALL WELDS SHOULD ADHERE TO THE LATEST HTT WELDING SPECIFICATION 101

CHANGE	R/L	REVISION	DATE
100507	A	RELEASE	05-03-06

Description: L/H VIBRATOR RELIEF VALVE ASSY

Drawing Number: ----------

Machine Type:

Model: 4011662.asm

Drawn: PJG

Date Drawn: 05-03-06

Weight: 21.610 lbm

Scale: 1:4

APVD Desg: JOC

APVD ChEng: JOC

Mat'l:

HTT
Harsco Track Technologies
Harsco
Columbia, SC

Part Number: 4011662

Size: B

Sheet: 1 of 1

Plotted by pgleaton on 5/18/2006 4011662.dft

CONFIDENTIAL

© COPYRIGHT 2001 HARSCO TRACK TECHNOLOGIES. THIS DRAWING OR DOCUMENT IS THE PROPERTY OF HARSCO TRACK TECHNOLOGIES AND EMBODIES CONFIDENTIAL INFORMATION, TRADE SECRET INFORMATION, AND/OR KNOW-HOW THAT IS THE PROPERTY OF HARSCO TRACK TECHNOLOGIES. BY ACCEPTING THIS DRAWING OR DOCUMENT, THE RECIPIENT AGREES (1) NOT TO PROVIDE, OR OTHERWISE MAKE AVAILABLE, THE DRAWING OR DOCUMENT, OR ANY INFORMATION OR KNOW-HOW EMBODIED THEREIN, TO ANY THIRD PARTY AND (2) NOT TO REPRODUCE OR USE THE DRAWING OR DOCUMENT TO MANUFACTURE ANY APPARATUS OR DEVICE, WITHOUT THE PRIOR WRITTEN AUTHORIZATION OF HARSCO TRACK TECHNOLOGIES.

SOLID EDGE DRAWING

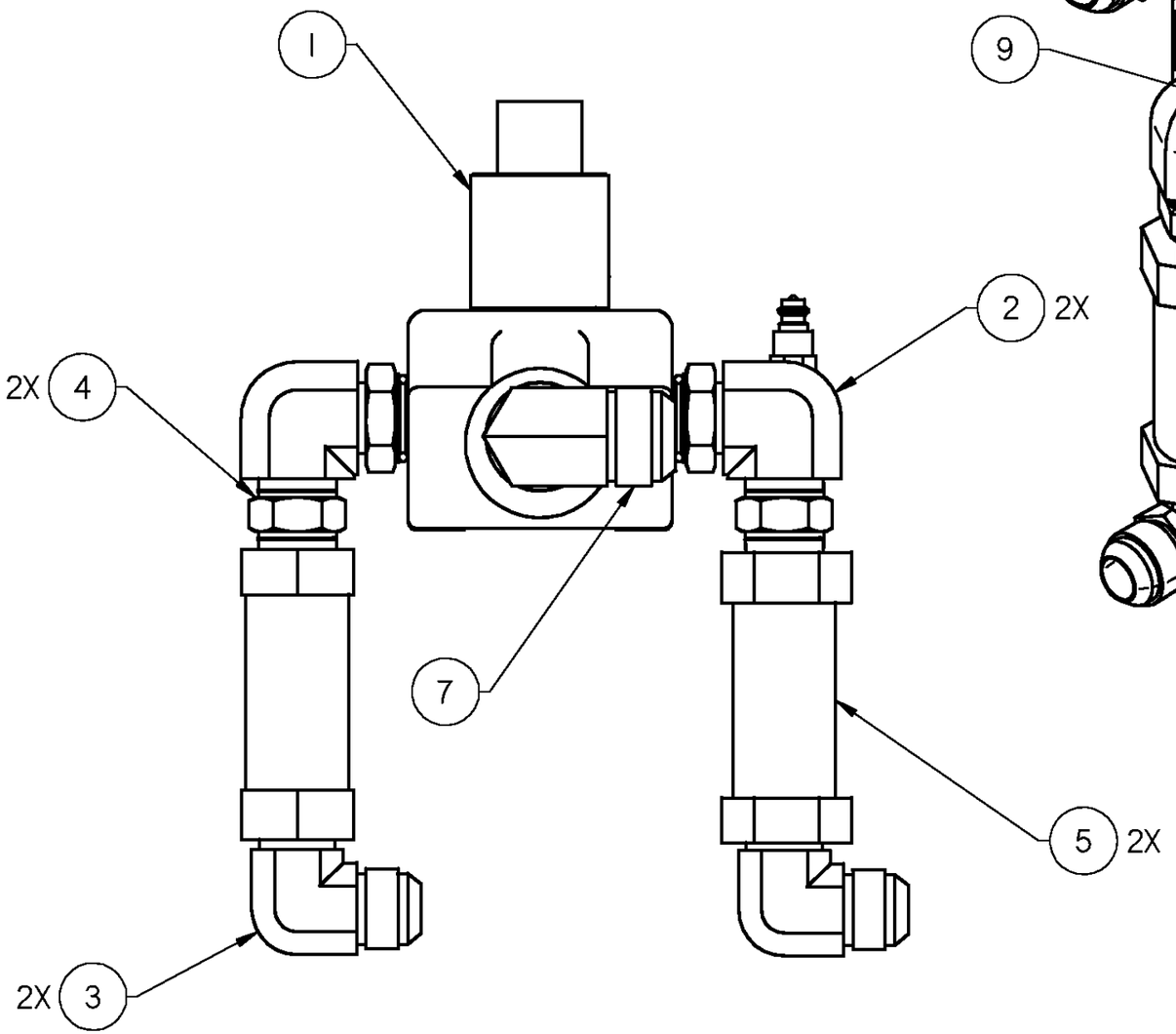

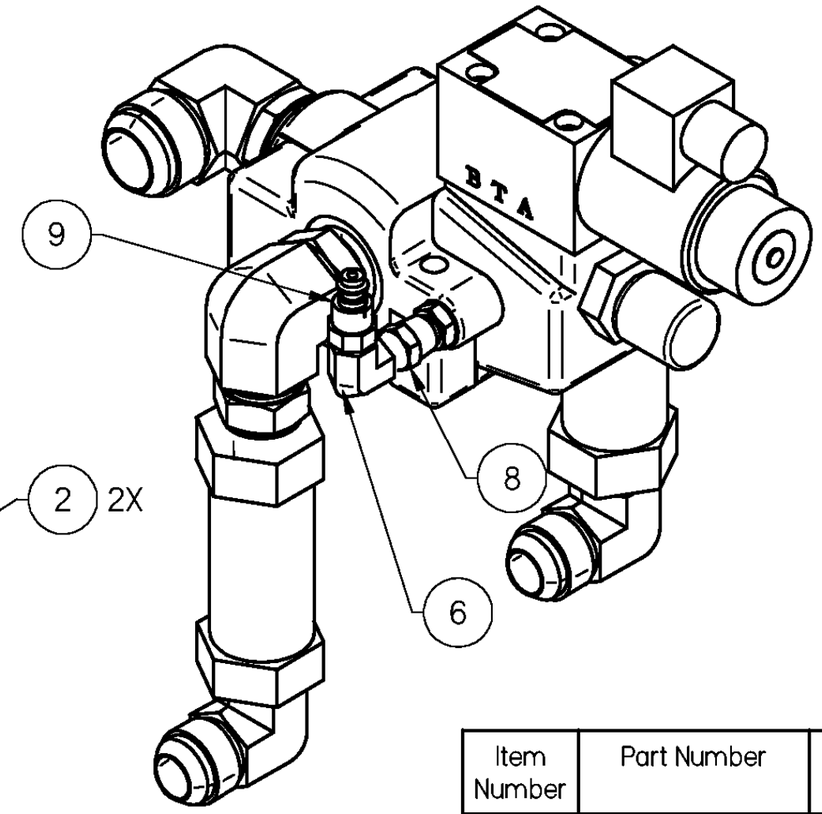

Item Number	Part Number	Description	Quantity
1	C1140Y04	SOL RELIEF VALVE	(1)
2	0-3304000-0-03	ORB/FP ADAPTER 90 DEG	2
3	L420006	ADAPTER, 3/4 JIC - 3/4 MP, 90	2
4	F011234	3/4 PIPE NIPPLE, HEX	2
5	L40549	CHECK VALVE 3/4 NPT-3PSI	2
6	F011937	1/4 MP X -4 JIC 90	1
7	L424285	-12 ORB X -16 JIC 90	1
8	F024731	FTG 1/4 MP X -4 JIC SW	1
9	L41228	1/4 MALE QUICK DISC	1

IMPLIED TOLERANCES

ALL DIMENSIONS ARE IN INCHES - TOLERANCE UNLESS OTHERWISE SPECIFIED

NOMINAL SIZE RANGE		INCH PLUS OR MINUS		NOMINAL SIZE RANGE		METRIC PLUS OR MINUS	
OVER	TO	2 PLACE DECIMAL	3 PLACE DECIMAL	OVER	TO	1 PLACE DECIMAL	2 PLACE DECIMAL
0	6	.03	.005	0	150	.8	.13
6	24	.04	.008	150	600	1.0	.20
24	-	.06	.010	-	600	1.5	.25

UNLESS OTHERWISE SPECIFIED ALL MACHINED SURFACES WILL HAVE;
A SURFACE FINISH OF 125 MICROINCHES
ANGULAR TOLERANCE OF ± .50°
CONCENTRICITY WITHIN .010

THIRD ANGLE PROJECTION

UNLESS OTHERWISE SPECIFIED ALL WELDS SHOULD ADHERE TO THE LATEST HTT WELDING SPECIFICATION 101

CHANGE	R/L	REVISION	DATE
100507	A	RELEASE	05-05-06

Description: R/H VIBRATOR RELIEF VALVE ASSY

Drawing Number: ----------

Machine Type:

Model: 4011663.asm

Drawn: PJG

Date Drawn: 05-05-06

Weight: 21.610 lbm

Scale: 1:4

APVD Desg: JOC

APVD ChEng: JOC

Mat'l:

HTT
Harsco Track Technologies
Harsco
Columbia, SC

Part Number: 4011663

Size: B

Sheet: 1 of 1

Plotted by pgleaton on 5/18/2006 4011663.dft

CONFIDENTIAL

© COPYRIGHT 2001 HARSCO TRACK TECHNOLOGIES. THIS DRAWING OR DOCUMENT IS THE PROPERTY OF HARSCO TRACK TECHNOLOGIES AND EMBODIES CONFIDENTIAL INFORMATION, TRADE SECRET INFORMATION, AND/OR KNOW-HOW THAT IS THE PROPERTY OF HARSCO TRACK TECHNOLOGIES. BY ACCEPTING THIS DRAWING OR DOCUMENT, THE RECIPIENT AGREES (1) NOT TO PROVIDE, OR OTHERWISE MAKE AVAILABLE, THE DRAWING OR DOCUMENT, OR ANY INFORMATION OR KNOW-HOW EMBODIED THEREIN, TO ANY THIRD PARTY AND (2) NOT TO REPRODUCE OR USE THE DRAWING OR DOCUMENT TO MANUFACTURE ANY APPARATUS OR DEVICE, WITHOUT THE PRIOR WRITTEN AUTHORIZATION OF HARSCO TRACK TECHNOLOGIES.

SOLID EDGE DRAWING

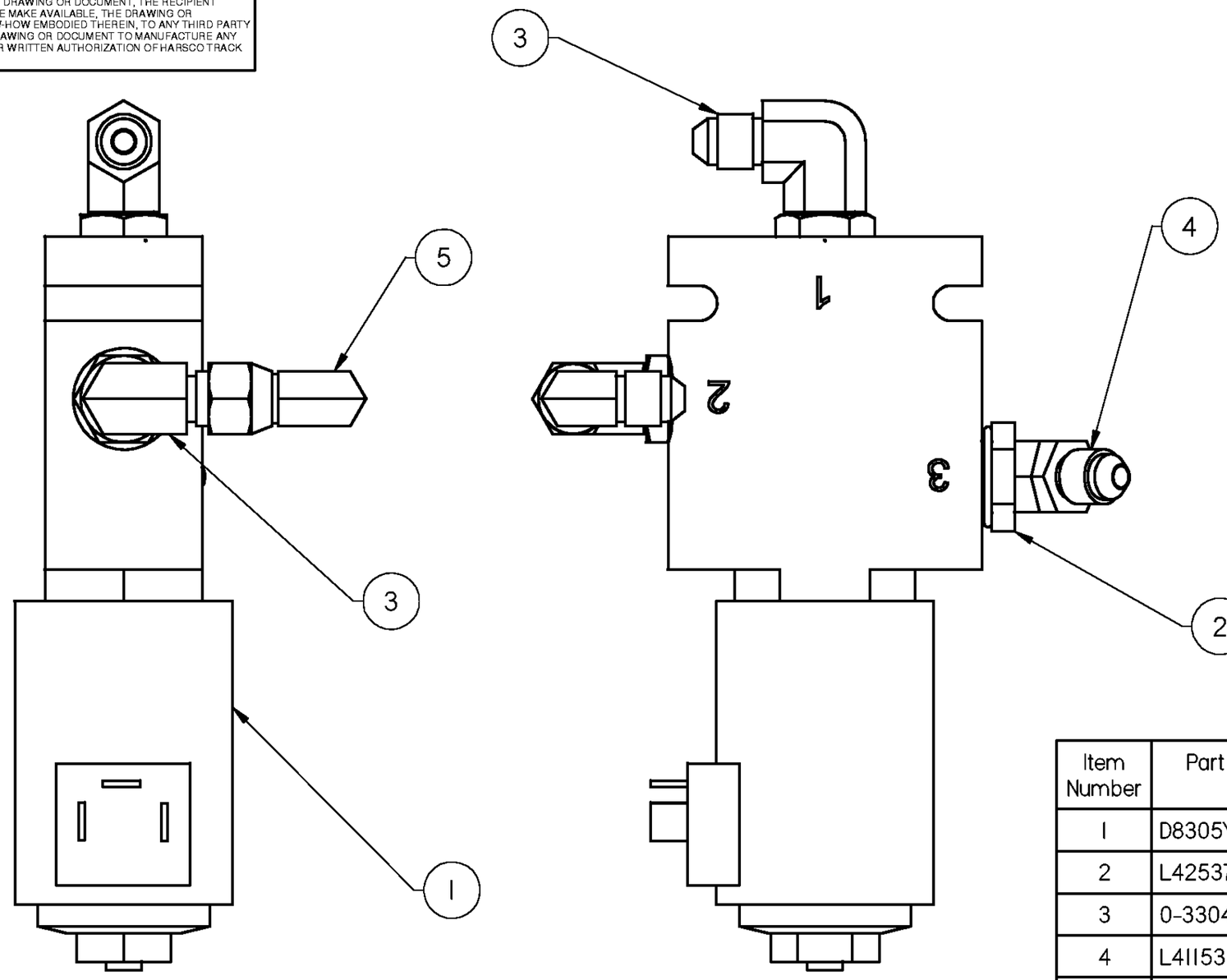

Item Number	Part Number	Description	Quantity
1	D8305Y01	PROP RED/RLV VALVE	1
2	L425372	3/8 ORBX 1/4 NPT(F)	1
3	0-3304017-0-02	FTG 3/8 ORB X 1/4 JIC 90 DEG	2
4	L411531	ADAPTER FTG 1/4 MP- JIC 45 DEG	1
5	0-3304148-0-03	SW JIC/90/JIC/FITTING	1

IMPLIED TOLERANCES

ALL DIMENSIONS ARE IN INCHES - TOLERANCE UNLESS OTHERWISE SPECIFIED

NOMINAL SIZE RANGE		INCH PLUS OR MINUS		NOMINAL SIZE RANGE		METRIC PLUS OR MINUS	
OVER	TO	2 PLACE DECIMAL	3 PLACE DECIMAL	OVER	TO	1 PLACE DECIMAL	2 PLACE DECIMAL
0	6	.03	.005	0	150	.8	.13
6	24	.04	.008	150	600	1.0	.20
24	-	.06	.010	-	600	1.5	.25

UNLESS OTHERWISE SPECIFIED ALL MACHINED SURFACES WILL HAVE;
A SURFACE FINISH OF 125 MICROINCHES
ANGULAR TOLERANCE OF ± .50°
CONCENTRICITY WITHIN .010

THIRD ANGLE PROJECTION

UNLESS OTHERWISE SPECIFIED ALL WELDS SHOULD ADHERE TO THE LATEST HTT WELDING SPECIFICATION 101

CHANGE	R/L	REVISION	DATE
100507	A	RELEASE	05-05-06

Description: DECEL VALVE ASSY

Drawing Number: ----------

Machine Type:

Model: 4011685.asm

Drawn: PJG

Date Drawn: 05-05-06

Weight: 4.631 lbm

Scale: 1:4

APVD Desg: JOC

APVD ChEng: JOC

Mat'l:

HTT
Harsco Track Technologies
Harsco
Columbia, SC

Part Number: 4011685

Size: B

Sheet: 1 of 1

Plotted by pgleaton on 5/18/2006 4011685.dft

CONFIDENTIAL

© COPYRIGHT 2001 HARSCO TRACK TECHNOLOGIES. THIS DRAWING OR DOCUMENT IS THE PROPERTY OF HARSCO TRACK TECHNOLOGIES AND EMBODIES CONFIDENTIAL INFORMATION, TRADE SECRET INFORMATION, AND/OR KNOW-HOW THAT IS THE PROPERTY OF HARSCO TRACK TECHNOLOGIES. BY ACCEPTING THIS DRAWING OR DOCUMENT, THE RECIPIENT AGREES (1) NOT TO PROVIDE, OR OTHERWISE MAKE AVAILABLE, THE DRAWING OR DOCUMENT, OR ANY INFORMATION OR KNOW-HOW EMBODIED THEREIN, TO ANY THIRD PARTY AND (2) NOT TO REPRODUCE OR USE THE DRAWING OR DOCUMENT TO MANUFACTURE ANY APPARATUS OR DEVICE, WITHOUT THE PRIOR WRITTEN AUTHORIZATION OF HARSCO TRACK TECHNOLOGIES.

SOLID EDGE DRAWING

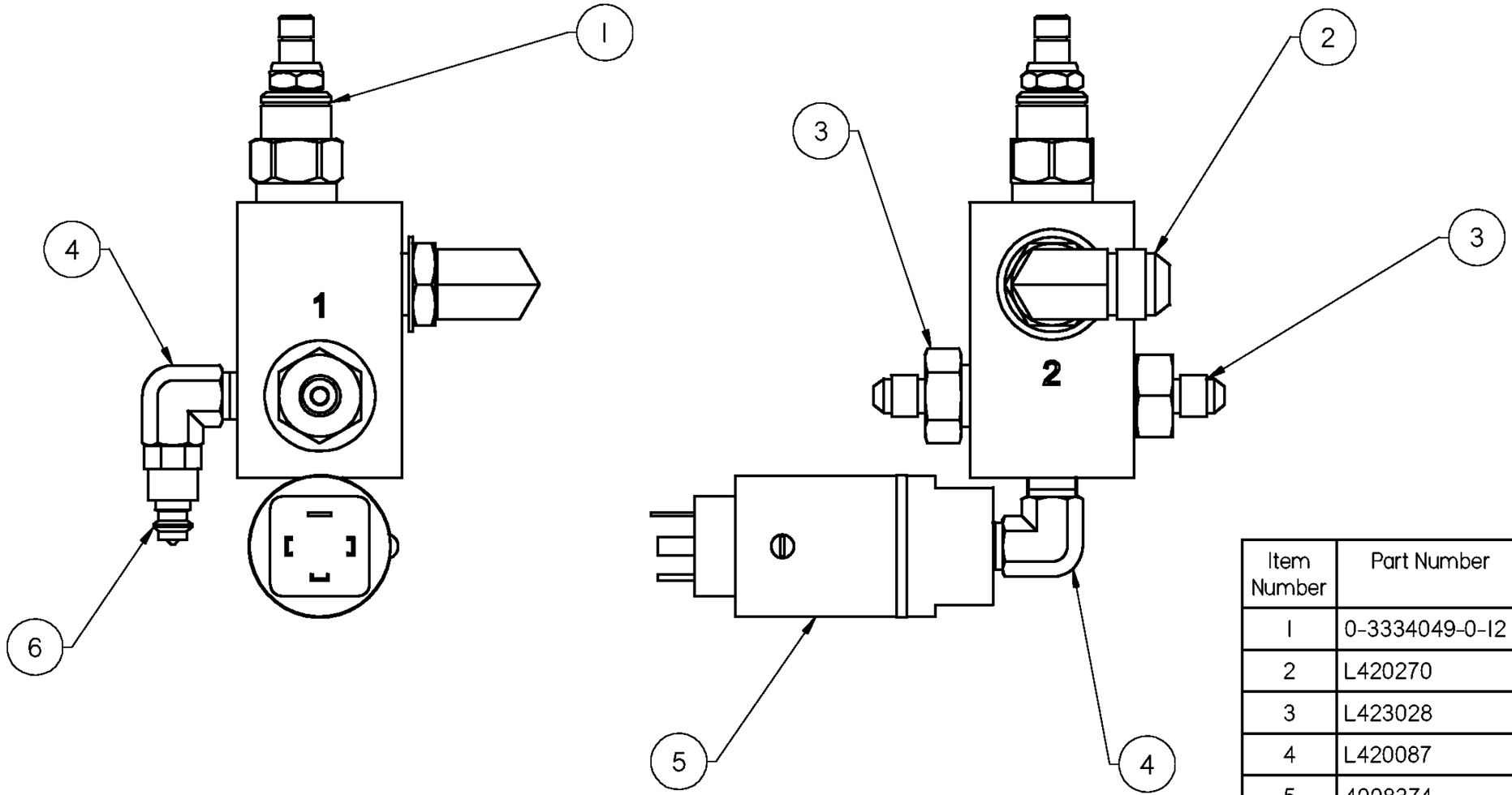

Item Number	Part Number	Description	Quantity
1	0-3334049-0-12	RELIEF VALVE	1
2	L420270	1/2 ORB X 1/2 JIC 90 DEG	1
3	L423028	1/2 ORB/1/4JIC STR	2
4	L420087	1/4 NTP X 90 DEG	2
5	4008374	TRANSDUCER, HYDRAULIC PRESS.	1
6	L41228	1/4 MALE QUICK DISC	1

IMPLIED TOLERANCES

ALL DIMENSIONS ARE IN INCHES - TOLERANCE UNLESS OTHERWISE SPECIFIED

NOMINAL SIZE RANGE		INCH PLUS OR MINUS		NOMINAL SIZE RANGE		METRIC PLUS OR MINUS	
OVER	TO	2 PLACE DECIMAL	3 PLACE DECIMAL	OVER	TO	1 PLACE DECIMAL	2 PLACE DECIMAL
0	6	.03	.005	0	150	.8	.13
6	24	.04	.008	150	600	1.0	.20
24	-	.06	.010	-	600	1.5	.25

UNLESS OTHERWISE SPECIFIED ALL MACHINED SURFACES WILL HAVE;
A SURFACE FINISH OF 125 MICROINCHES
ANGULAR TOLERANCE OF ± .50°
CONCENTRICITY WITHIN .010

THIRD ANGLE PROJECTION

UNLESS OTHERWISE SPECIFIED ALL WELDS SHOULD ADHERE TO THE LATEST HTT WELDING SPECIFICATION 101

CHANGE	R/L	REVISION	DATE
100507	A	RELEASE	05-05-06

Description: SQUEEZE RELIEF VALVE ASSY

Drawing Number: ----------

Machine Type:

Model: 4011686.asm

Drawn: PJG

Date Drawn: 05-05-06

Weight: 4.413 lbm

Scale: 1:4

APVD Desg: JOC

APVD ChEng: JOC

Mat'l:

HTT
Harsco Track Technologies
Harsco
Columbia, SC

Part Number: 4011686

Size: B

Sheet: 1 of 1

Plotted by pgleaton on 5/19/2006 4011686.dft

MKIV (L&H) VALVE KIT

	ITEM NO	PART NUMBER	DESCRIPTION	QTY	C2087VAA	C2088VAA	C2089VAA	C2090VAA	C2091VAA	C2092VAA	C2093VAG	C2094VAG	C2095VAH	C2101VAA	C2102VAA	C2112VAC	C2115303	D0728VAA	D0447VAA	C1737VAA	5004624	C7761VAB	C7762XAA	C7765XAA	C7766XAA	C7768XAB	C7781XAA
					TOTAL QTY EA ITEM	JACK VALVE (REGEN)	PWR/T AXLE LOCKOUT	PUMP CONTROL [PT1]	PUMP CONTROL [PT2]	FRONT TRAVERSE	REAR TRAVERSE	BIAS & CLAMP	LINER & CLAMP	WKHD VALVES	WKHD TRAVERSE	BIAS & CLAMP	AXLE LOCKOUT	FRONT SLIDER VALVE	SLIDING AXLE ASSY	EXCURSE SKID ASSY	HYD INTERCONNECT	FRONT SHIFTER VALVE	INDEX BRAKE VALVE	SHADOWBOARD VALVE	INDEX BRAKE VALVE	FRONT SHIFTER VALVE
HYDRAULIC COMPONENTS	10	0-3333037-0-08	DIR VALVE (DO5)	(1)												1											
	20	0-3333037-0-09	DIR VALVE (DO5)	(5)								2		2	1												
	30	0-3333037-0-10	DIR VALVE (DO5)	(1)											1												
	40	0-3333037-0-18	DIR VALVE (D05)	(2)										1	1												
	50	0-3333037-0-19	DIR VALVE (D05)	(4)								4															
	60	0-3336021-0-18	CHECK VALVE 3 PSI (-16ORB)	(2)										1	1												
	~~70~~	~~0-3336024-0-06~~	~~CHECK VALVE (DO3)~~	~~(1)~~	~~1~~																						
	80	0-3336024-0-07	CHECK VALVE (DO3) PO A&B	(2)										1	1												
	90	0-3360011-0-03	ADAPTER PLATE (DO3/DO5)	(2)										1	1												
	100	0-3360011-0-06	MANIFOLD BLANKING PLATE (DO3)	(1)									1														
	110	0-3360012-0-05	MANIFOLD (2 STATION) (DO5)	(1)								1															
	~~120~~	~~0-3361004-0-05~~	~~SUBPLATE (DO8)~~	~~(1)~~							~~1~~																
	~~130~~	~~0-3361006-0-03~~	~~SUBPLATE~~	~~(2)~~	~~1~~	~~1~~	~~1~~										~~1~~										
	140	0-3364012-0-02	MANIFOLD (3 STATION) (DO3)	(1)									1														
	~~15~~	~~4021016~~	~~PUMP DRIVE (2 PAD)~~	~~(1)~~																~~1~~							
	150	A0757Y04	MANIFOLD (4 STATION) (DO5)	(2)										1	1												
	160	A0963Y01	MANIFOLD (2 STATION) (DO8)	(1)	1																						
	170	A4490Y03	DIR VALVE (D08)	(2)							1	2															
	180	A4490Y07	DIR VALVE (D08)	(2)	2																						
	~~20~~	~~B6222Y04~~	~~SAE TEST BLOCK~~	~~(2)~~																~~2~~							
	~~21~~	~~G0993Y01~~	~~DIR VALVE (D03)~~	~~(2)~~			~~1~~	~~1~~																			
	~~190~~	~~C0993Y02~~	~~DIR VALVE (D03)~~	~~(2)~~	~~1~~												~~1~~										
	200	C0993Y03	DIR VALVE (D03)	(4)									2	1	1												
	210	C1140Y04	SOL OP RELIEF VALVE	(2)																	2						
	~~25~~	~~C5881Y02~~	~~MOTOR (VARABLE)~~	~~(1)~~															~~1~~								
	~~26~~	~~C8649Y01~~	~~MOTOR (FIXED)~~	~~(1)~~																							
	~~27~~	~~D4346Y01~~	~~PUMP (PISTON)~~	~~(2)~~																~~2~~							
	220	D6328X01	SUBPLATE (SPECIAL) (DO8)	(2)								2															
	~~30~~	~~L40316~~	~~1/4 NPT FILT/SNUB (40MIC)~~	~~(2)~~			~~1~~	~~1~~																			
PNEUMATIC COMPONENTS	230	D0393Y01	AIR VALVE (K-SERIES)	(2)																			1	1	1		
	240	D0393Y02	AIR VALVE (K-SERIES)	(3)																		1					3
	250	D0393Y03	AIR VALVE (K-SERIES)	(5)																			2	1	4		
	260	0-3350004-0-06	DUST EXCLUDER	(6)																		2	2	2	2	2	2
	270	0-3401000-0-05	MANIFOLD	(3)																		1					3
	280	0-3401000-0-06	MANIFOLD	(4)																			1	1	3		
	290	0-3401000-0-08	MOUNTING BRACKET	(3)																		1	1	1	1	1	1
	300	0-3401000-0-09	MANIFOLD REGULATOR	(3)																			2	1	2		
	310	0-3401000-0-13	AIR MANIFOLD	(3)																			2	1	2		
	320	0-3413005-0-18	PRESSURE REGULATOR VALVE	(3)																			2	1	2		

ASSEMBLIES USED ON — QUANTITIES PER ASSY

ITEM HTT PART NUMBER & DESCRIPTION / SUB-ASSEMBLIES KIT IDENTIFIERS

SUB-ASSEMBLIES DESCRIPTION VALVE ASSEMBLIES (USED ON)

CONFIDENTIAL

© COPYRIGHT 2001 HARSCO TRACK TECHNOLOGIES. THIS DRAWING OR DOCUMENT IS THE PROPERTY OF HARSCO TRACK TECHNOLOGIES AND EMBODIES CONFIDENTIAL INFORMATION, TRADE SECRET INFORMATION, AND/OR KNOW-HOW THAT IS THE PROPERTY OF HARSCO TRACK TECHNOLOGIES. BY ACCEPTING THIS DRAWING OR DOCUMENT, THE RECIPIENT AGREES (1) NOT TO PROVIDE, OR OTHERWISE MAKE AVAILABLE, THE DRAWING OR DOCUMENT, OR ANY INFORMATION OR KNOW-HOW EMBODIED THEREIN, TO ANY THIRD PARTY AND (2) NOT TO REPRODUCE OR USE THE DRAWING OR DOCUMENT TO MANUFACTURE ANY APPARATUS OR DEVICE, WITHOUT THE PRIOR WRITTEN AUTHORIZATION OF HARSCO TRACK TECHNOLOGIES.

SOLID EDGE DRAWING

IMPLIED TOLERANCES — ALL DIMENSIONS ARE IN INCHES - TOLERANCE UNLESS OTHERWISE SPECIFIED

NOMINAL SIZE RANGE OVER	TO	HIGH (PLUS OR MINUS) 1 PLACE DECIMAL	2 PLACE DECIMAL	NOMINAL SIZE RANGE OVER	TO	METRIC (PLUS OR MINUS) 1 PLACE DECIMAL	2 PLACE DECIMAL
0	6	.03	.005	0	150	.8	.13
6	24	.04	.006	150	600	1.0	.20
24		.06	.010		600	1.5	.25

UNLESS OTHERWISE SPECIFIED ALL BACKING SURFACE WILL HAVE A SURFACE FINISH OF 125 MICROINCHES AND AN TIP RADIUS OF - 50" CONCENTRICITY WITHIN .014

THIRD ANGLE PROJECTION

UNLESS OTHERWISE SPECIFIED ALL WELDS SHALL BE MADE TO THE LATEST AWS STANDARD SPECIFICATION

CHANGE	R/L	REVISION		DATE
[illegible]	[illegible]	[illegible]		1/21/11
EC500624	3	DEL ITEM 70,130,190	BPA	2/28/11
EC500954	C	DEL. 120, ITEM 220 QTY WAS 1, DEL ASSY C9095WAG	BPA	4/20/11

Description: MK IV (L&H) VALVE KIT

Drawing Number: 5004628.par

Machine Type: MKIV

Model: 5004628.par

Weight: - -

Scale: 1:4

Drawn: BPA — Date Drawn: 1/14/11

APVD Dwg: BA — APVD ChDwg: HW

Part Number: 5004628 — Size: D — Sheet: 1 of 1

HTT
Harsco Track Technologies
Harsco
Columbia, SC

Plotted by badler on 4/20/2011 5004628.dft

MKIV (FTI) VALVE KIT

ITEM NO	PART NUMBER	DESCRIPTION	QTY	C9087VAA JACK VALVE (REGEN)	~~C9088XAA PIVOT AXLE LOCKOUT~~	~~C9094XAA PUMP CONTROL (2X)~~	~~C9095WAG FRONT TRACTION~~	C9095WAH REAR TRACTION	C9101VAA WK/HD VALVES	C9102WAA WK/HD TRAVERSE	C9104VAB LINER & CLAMP	C9112VAC BIAS & CLAMP	~~40I5393 AXLE LOCKOUT~~
				ASSEMBLIES USED ON									
				QUANTITIES PER ASSY									
~~1~~	~~0-3334026-0-04~~	~~PRESSURE REDUCING VALVE~~	~~(1)~~		~~1~~								
2	0-3334013-0-05	PRESSURE REDUCING VALVE	(1)									1	
3	0-3334057-0-07	DUAL RELIEF VALVE	(2)				1	2					
4	0-3335024-0-11	FLOW CONTROL VALVE	(1)								1		
5	0-3335024-0-12	PC FLOW CONTROL VALVE	(4)						4				
6	0-3336002-0-01	DUAL ANTI-CAV CHECK	(2)						2				
7	0-3336003-0-02	CHECK VALVE	(1)									1	
8	A1070Y19	RELIEF VALVE SANDWICH	(5)						2		2	1	
~~9~~	~~A1070Y29~~	~~RELIEF VALVE SANDWICH~~	~~(2)~~			~~2~~							
10	B9529Y01	FLOW REGULATOR	(2)	2									
11	C0613Y01	PRESSURE RED/REL VALVE	(1)							1			
~~12~~	~~C0613Y07~~	~~PRESSURE RED/REL VALVE~~	~~(1)~~										~~1~~
13	C0674Y01	LOAD SENSING SANDWICH	(2)							2			
14	C3759W02	FLOAT MANIFOLD	(1)									1	
15	A2803Y04	ANTI-CAV CHECK VALVE	(2)				1	2					
16	H2247Y01	DUAL FLOW REGULATOR ASSY	(2)								1	1	
ITEM NUMBER / HTT PART NUMBER & DESCRIPTION		SUB-ASSEMBLIES / KIT IDENTIFIERS	TOTALS										
SUB-ASSEMBLIES DESCRIPTION / VALVE ASSEMBLIES (USED ON)			TOTAL QTY EA ITEM										

CONFIDENTIAL
© COPYRIGHT 2010 HARSCO. THIS DRAWING OR DOCUMENT IS THE PROPERTY OF HARSCO AND EMBODIES CONFIDENTIAL, INFORMATION, TRADE SECRET INFORMATION, AND/OR KNOW-HOW THAT IS THE PROPERTY OF HARSCO. BY ACCEPTING THIS DRAWING OR DOCUMENT, THE RECIPIENT AGREES (1) NOT TO PROVIDE, OR OTHERWISE MAKE AVAILABLE, THE DRAWING OR DOCUMENT, OR ANY INFORMATION OR KNOW-HOW EMBODIED THEREIN, TO ANY THIRD PARTY AND (2) NOT TO REPRODUCE OR USE THE DRAWING OR DOCUMENT TO MANUFACTURE ANY APPARATUS OR DEVICE, WITHOUT THE PRIOR WRITTEN AUTHORIZATION OF HARSCO.

INCH				METRIC			
DECIMAL PLACES	PLUS OR MINUS			DECIMAL PLACES	PLUS OR MINUS		
DECIMAL	PLUS OR MINUS	2 PLACE DECIMAL	3 PLACE DECIMAL	DECIMAL	PLUS OR MINUS	1 PLACE DECIMAL	2 PLACE DECIMAL
0	6	.03	.005	0	150	.8	.13
6	.24	.04	.008	150	600	1.0	.20
24	-	.06	.010	600	-	1.5	.25

UNLESS OTHERWISE SPECIFIED ALL MACHINED SURFACES WILL HAVE A SURFACE FINISH OF 125 MICROINCHES AND ALL ANGLES TO BE WITHIN ± 30' CONCENTRICITY WITHIN .010

THIRD ANGLE PROJECTION

UNLESS OTHERWISE SPECIFIED, ALL WELDS SHOULD ADHERE TO THE MOST CURRENT AWS WELDING STANDARDS

CHANGE	R/L	REVISION	DR	DATE
500376	A	NEW RELEASE	JRD	1-19-11
[illegible]	[illegible]	[illegible]	[illegible]	[illegible]
EC500954	C	DEL ASSY C9095WAG MOVE QTY TO C9095WAH	[illegible]	[illegible]

Description: MK IV (FTI) VALVE KIT

HARSCO RAIL

Material:

Machine Type: MARK IV

Size: D

Weight:

Drawn: jduehlmeyer

Date Drawn: 4/20/2011

Part Number: 5004762

Sheet: 1 of 1

SOLID EDGE DRAWING

DO NOT SCALE

Inch [mm]

Plotted by badler on 4/20/2011 5004762.dft

MKIV VALVE FITTINGS

	ITEM NO	PART NUMBER	DESCRIPTION	QTY	TOTALS	C9097VAG	C9094VAA	C9088XAA	C9087VAA	4015393	C9102WAA	C9101VAA	C9095WAH	C9112VAC	C9104VAB	C7781XAA	C7786XAB	C7788XAA
					TOTAL QTY EACH ITEM	FRONT TRACTION	PUMP CONTROL (2X)	PIVOT AXLE LOCKOUT	JACK VALVE (REGEN)	AXLE LOCKOUT	W/K/HD TRAVERSE	W/K/HD VALVES	REAR TRACTION	B/AS & CLAMP	LINER & CLAMP	FRONT SHIFTER VALVE	INDEX BRAKE VALVE	SHADOWBOARD VALVE
HYDRAULIC COMPONENTS	1	L423021	1 1/4 ORB X JIC STR	2	1								2					
	2	L423036	3/8 ORB X JIC STR	2	1				1									
	3	L424676	3/8 ORB PLUG	1	1													
	4	L425932	1/4 ORB X 1/4 JIC 90°	3	1								3					
	5	0-3304162-0-10	1 1/4 ORB X JIC LG STR	2	2													
	6	0-3304115-0-12	1 1/4 ORB X JIC X 45°	2	1								2					
	7	L420651	1/4 ORB X 1/4 JIC X STR	1	1													
	8	L41228	1/4 MALE QUICK DISCONNECT	13	2			1		1	1		4	3	3			
	9	L41079	1/4 NPT HEX NIPPLE	7	2					1	1			1	2			
	10	0-3304203-0-03	3/8 ORB PLUG	2											2			
	11	L411939	3/8 ORB X JIC 90°	10				4		2			4					
	~~12~~	~~0-3304161-0-04~~	~~3/8 ORB X JIC TEE~~	~~2~~		~~2~~												
	~~13~~	~~0-3304192-0-02~~	~~3/8 JIC SWIVEL - 1/4 MALE NPT 90°~~	~~2~~		~~2~~												
	~~14~~	~~A0750Y08~~	~~1/4 FEMALE NPT FIXED ORIFICE(.031)~~	~~2~~		~~2~~												
	~~15~~	~~L411385~~	~~1/4 NPT X JIC~~	~~2~~		~~2~~												
	~~16~~	~~0-3304132-0-01~~	~~3/8 JIC - 1/4 JIC REDUCER~~	~~2~~		~~2~~												
	17	L420087	1/4 NPT MP 90°	5				1					4					
	18	L424015	1" ORB X JIC X STR	4					4									
	19	L421701	1" ORB X JIC X 90°ELBOW	2					2									
	20	0-3304017-0-22	1 1/4 ORB X 1" JIC X 90°ELBOW	2					2									
	21	L421708	3/8 ORB X 1/4 JIC STR	2						2								
	22	L423299	1/4 NPT X 1/8 NPT	1							1							
	23	L420150	1/2 ORB X JIC STR	4							2			2				
	24	L411381	1/4 NPT X 1/2 JIC STR	1							1							
	25	0-3304028-0-36	1/4 ORB X 1/2 JIC	2							2							
	26	0-3304203-0-04	1/2 ORB SOC HD PLUG	4							4							
	27	L41251	1/4 NPT COUPLING	1							1							
	28	0-3304057-0-09	1/2 JIC SW BRANCH TEE	1							1							
	29	L424556	1/2 O-RING-3/4 JIC ST	16							2		8		2	4		
	30	D2093Y01	1/2 O-RING BOSS X FP STR	4									4					
	31	L424351	3/4 O-RING BOSS X 1" JIC STR	6									4		1	1		
	32	L411383	3/4 JIC X 1/2 NPT STR	4									4					
	33	L422763	1 1/4 ORB X JIC X 90°	2									2					
	34	0-3304028-0-29	3/4 ORB-3/4 JIC 90°	2									2					
	35	0-3304175-0-11	-8 ORB X JIC X Ø.094 (ORIFICE)	2							2							
	36	L425696	3/8 ORB-1/2 JIC STR	2									2					
	37	BLANK	*	*									*					
	38	L425952	3/4 ORB X 1/2 JIC X 90°	1										1				
	39	0-3304017-0-19	1" ORB X 3/4 JIC X 90°	2										1	1			
	40	0-3304179-0-02	3/4 ORB X JIC SW	2										1	1			
	41	L423028	1/2 ORB X 1/4 JIC	4										2	2			
	42	0-3304028-0-22	1" ORB X 3/4 JIC	2										1	1			
	43	L424285	3/4 ORB X 1"JIC X 90°	2										1	1			
	44	G5787Y02	1/2 ORB X 1/4 NPT STR	4										2	2			
	45	L424675	3/4 ORB PLUG	1											1			
	46	L425372	3/8 ORB X 1/4 NPT(F)	2											2			
	~~47~~	~~0-3304017-0-19~~	~~1" ORB X 3/4 JIC X 90°~~	~~1~~											~~1~~			
PNEUMATIC	48	0-3304118-0-11	ADAPTER PLUG 1/4 NPT	19												6	8	5
	49	BLANK	*	*												*		
	50	L420110	-6 NPT PLUG	1												1		
	51	L411385	1/4 NPT X 1/4 JIC	17												6	8	3
	52	L420114	3/8 NPT X JIC STRAIGHT	2													1	1
	53	A5443Y13	1/4 TUBE X 3/8 NPT	2													1	1

ITEM NUMBER
HTT PART NUMBER &
DESCRIPTION

SUB-ASSEMBLIES
KITS IDENTIFIERS

SUB-ASSEMBLIES DESCRIPTION
VALVE ASSEMBLIES (USED ON)

ASSEMBLIES USED ON — QUANTITIES PER ASSY PKG

Inch
[mm]

CONFIDENTIAL
© COPYRIGHT 2010 HARSCO. THIS DRAWING OR DOCUMENT IS THE PROPERTY OF HARSCO AND EMBODIES CONFIDENTIAL, INFORMATION, TRADE SECRET INFORMATION, AND/OR KNOW-HOW THAT IS THE PROPERTY OF HARSCO. BY ACCEPTING THIS DRAWING OR DOCUMENT, THE RECIPIENT AGREES (1) NOT TO PROVIDE, OR OTHERWISE MAKE AVAILABLE, THE DRAWING OR DOCUMENT, OR ANY INFORMATION OR KNOW-HOW EMBODIED THEREIN, TO ANY THIRD PARTY AND (2) NOT TO REPRODUCE OR USE THE DRAWING OR DOCUMENT TO MANUFACTURE ANY APPARATUS OR DEVICE, WITHOUT THE PRIOR WRITTEN AUTHORIZATION OF HARSCO.

INCHES (UNLESS OTHERWISE SPECIFIED)	INCH PLUS OR MINUS		METRIC (UNLESS OTHERWISE SPECIFIED)	METRIC PLUS OR MINUS	
DECIMAL	ANGULAR	3 PLACE DECIMAL	DECIMAL	1 PLACE DECIMAL	2 PLACE DECIMAL
0 - 6	0.3	.005	0 - 150	.8	.13
6 - 24	.04	.008	150 - 600	1.0	.20
24 -	.06	.010	600 -	1.5	.25

UNLESS OTHERWISE SPECIFIED, ALL SURFACES R/A 125 MIN. WILL HAVE A SURFACE FINISH OF 125 MICROINCHES AND LAY TO DEPTH OF 1.5 MT CONSISTENCY WITHIN 0.150

THIRD ANGLE PROJECTION

UNLESS OTHERWISE SPECIFIED, ALL MATERIALS SHOULD ADHERE TO THE MOST CURRENT A.N.S.I. MATERIAL STANDARDS.

CHANGE	S/L	REVISION	DR	DATE
500376	A	NEW RELEASE	JRD	1-19-11
EC500954	B	DEL ASSY C9095WAG MOVE QTY TO ASSY C9095WAH, 11 QTY WAS 8, 17 QTY WAS 3, 32-33 QTY WAS 1, 36 QTY WAS 1	BPA	4/20/11

Description: MARK IV FITTING KIT

HARSCO RAIL

Material:

Weight: SOLID EDGE DRAWING

Machine Type: MARK IV

Drawn: jduehlmeyer | Date Drawn: 4/20/2011 | DO NOT SCALE

Part Number: 5004764

Size: D | Sheet: 1 of 1

Plotted by badler on 4/20/2011 5004764.dft

CONFIDENTIAL

© COPYRIGHT 2001 HARSCO TRACK TECHNOLOGIES. THIS DRAWING OR DOCUMENT IS THE PROPERTY OF HARSCO TRACK TECHNOLOGIES AND EMBODIES CONFIDENTIAL INFORMATION, TRADE SECRET INFORMATION, AND/OR KNOW-HOW THAT IS THE PROPERTY OF HARSCO TRACK TECHNOLOGIES. BY ACCEPTING THIS DRAWING OR DOCUMENT, THE RECIPIENT AGREES (1) NOT TO PROVIDE, OR OTHERWISE MAKE AVAILABLE, THE DRAWING OR DOCUMENT, OR ANY INFORMATION OR KNOW-HOW EMBODIED THEREIN, TO ANY THIRD PARTY AND (2) NOT TO REPRODUCE OR USE THE DRAWING OR DOCUMENT TO MANUFACTURE ANY APPARATUS OR DEVICE, WITHOUT THE PRIOR WRITTEN AUTHORIZATION OF HARSCO TRACK TECHNOLOGIES.

SOLID EDGE DRAWING

MACHINE: MARK IV STANDARD
MODEL: JUPITER, TIER III ENGINE
2007

HOSE ASSEMBLIES ARE TO BE PLUGGED WITH THREAD PROTECTORS AND INDIVIDUALLY MARKED WITH UNIQUE ASSEMBLY IDENTIFIER. ALL HOSES WITH STRAIGHT 37 DEGREE JIC HOSE ENDS UNLESS OTHERWISE SPECIFIED. LENGTH IS CUT DIMENSION IN INCHES.

ITEM	SIZE/TYPE/ LENGTH	QTY	LENGTH	DESCRIPTION	HOSE TYPE	WHERE IT GOES ON THE MACHINE
				PROJECTOR BUGGY AND FRONT LOCKOUTS		
101	6HP134	1	134	3/8 HIGH PRESSURE	GH 793-6	TEE ON P-2 CHECK SUPPLY LINE TO BULKHEAD TEE
102	6MP98	1	98	3/8 MEDIUM PRESSURE	FC 211-6	BOTTOM BULKHEAD TEE TO CENTER CORNER LEFT CENTER FITTING
103	4HP44	1	44	1/4 HIGH PRESSURE	GH 793-4	TOP BULKHEAD TEE TO PORT ON BUGGY LIFT VALVE
104	4HP45	1	45	1/4 HIGH PRESSURE	GH 793-4	TANK PORT ON BUGGY LIFT VALVE TO BULKHEAD TEE
105	4HP78.5	1	78 1/2	1/4 HIGH PRESSURE	GH 793-4	C-1 TO ROD END OF BUGGY LIFT CYLINDER
106	4HP84	1	84	1/4 HIGH PRESSURE	GH 793-4	C-2 TO PISTON END OF BUGGY LIFT CYLINDER
107	4HP11	1	11	1/4 HIGH PRESSURE	GH 793-4	CHECK VALVE AT C-2 TO TEE IN TANK PORT
108						
109						
110						
111						
112						
113						
114						
115						
116						
117						
118						
119						
120						
121						
122						
123						
124						
125						
126						
127						
128						
129						
130						
131						
132						
133						
134						
135						
136						

IMPLIED TOLERANCES

ALL DIMENSIONS ARE IN INCHES - TOLERANCE UNLESS OTHERWISE SPECIFIED

NOMINAL SIZE RANGE		INCH PLUS OR MINUS		NOMINAL SIZE RANGE		METRIC PLUS OR MINUS	
OVER	TO	2 PLACE DECIMAL	3 PLACE DECIMAL	OVER	TO	1 PLACE DECIMAL	2 PLACE DECIMAL
0	6	.03	.005	0	150	.8	.13
6	24	.04	.008	150	600	1.0	.20
24	-	.06	.010	-	600	1.5	.25

UNLESS OTHERWISE SPECIFIED ALL MACHINED SURFACES WILL HAVE;
A SURFACE FINISH OF 125 MICROINCHES
ANGULAR TOLERANCE OF ± .50°
CONCENTRICITY WITHIN .010

THIRD ANGLE PROJECTION

UNLESS OTHERWISE SPECIFIED ALL WELDS SHOULD ADHERE TO THE LATEST HTT WELDING SPECIFICATION 101

CHANGE	R/L	REVISION	DATE
101704	A	NEW RELEASE	03-28-08

Description: HOSE KIT
Drawing Number: ----------
Machine Type: MK IV JUPITER
Model: 4016555.dft
Drawn: hwiggins
Date Drawn: 03-28-08
Weight: ----------
Scale: 1:4
APVD Desg: HW
APVD ChEng: JBR
Mat'l: ----------

HTT
Harsco Track Technologies
Harsco
Columbia, SC

Part Number: 4016555
Size: B
Sheet: 1 of 16

Plotted by hwiggins on 3/28/2008 4016555.dft

CONFIDENTIAL

© COPYRIGHT 2001 HARSCO TRACK TECHNOLOGIES. THIS DRAWING OR DOCUMENT IS THE PROPERTY OF HARSCO TRACK TECHNOLOGIES AND EMBODIES CONFIDENTIAL INFORMATION, TRADE SECRET INFORMATION, AND/OR KNOW-HOW THAT IS THE PROPERTY OF HARSCO TRACK TECHNOLOGIES. BY ACCEPTING THIS DRAWING OR DOCUMENT, THE RECIPIENT AGREES (1) NOT TO PROVIDE, OR OTHERWISE MAKE AVAILABLE, THE DRAWING OR DOCUMENT, OR ANY INFORMATION OR KNOW-HOW EMBODIED THEREIN, TO ANY THIRD PARTY AND (2) NOT TO REPRODUCE OR USE THE DRAWING OR DOCUMENT TO MANUFACTURE ANY APPARATUS OR DEVICE, WITHOUT THE PRIOR WRITTEN AUTHORIZATION OF HARSCO TRACK TECHNOLOGIES.

SOLID EDGE DRAWING

ITEM	SIZE/TYPE/ LENGTH	QTY	LENGTH	DESCRIPTION	HOSE TYPE	WHERE IT GOES ON THE MACHINE
				FRONT TRACTION		
201	20SHP72	1	72	1-1/4 SUPER HIGH PRESS	FC 136-20	B PORT ON TRACTION VALVE TO TOP PORT OF MOTOR
202	20SHP72	1	72	1-1/4 SUPER HIGH PRESS	FC 136-20	A PORT ON TRACTION VALVE TO BOTTOM PORT OF MOTOR
203	20SHP100	1	100	1-1/4 SUPER HIGH PRESS	FC 136-20	P-1 HARD LINE UNDER ENGINE TO TRACTION VALVE P-PORT
204	20MP49	1	49	1-1/4 MEDIUM PRESSURE	GH 663-20	TANK PORT ON TRACTION VALVE TO RELIEF ON TOP OF TANK
205	8HP21	1	21	1/2 HIGH PRESSURE	GH 793-8	FROM OUTLET PORT ON TRACTION PUMP TO INLET PORT ON TRANSMISSION
206	8HP154	1	154	1/2 HIGH PRESSURE	GH 793-8	FROM 3/4 HARD LINE ON LEFT SIDE OF MACHINE TO INLET PORT ON TRACTION MOTOR
207	4HP18	1	18	1/4 HIGH PRESSURE	GH 793-4	FROM CHECK TO CHECK VALVE AT TRACTION VALVE
208	4HP55	1	55	1/4 HIGH PRESSURE	GH 793-4	FROM TEE ON TRACTION RELIEF VALVE TO 3/8 HARD LINE LEFT SIDE
209	8MP102	1	102	1/2 MEDIUM PRESSURE	FC 211-8	FROM OUTLET PORT ON TOP OF TRACTION MOTOR TO RELIEF VALVE ON HYDRAULIC TANK
210	8MP87	1	87	1/2 MEDIUM PRESSURE	FC 211-8	MOTOR CASE DRAIN TO RIGHT CENTER FITTING TOP OF HYDRAULIC TANK
211	6MP21	1	21	3/8 MEDIUM PRESSURE	FC 211-6	FROM RELIEF VALVE ON BOTTOM OF TRACTION MOTOR TO TEE ON TOP OF TRACTION MOTOR
212	6MP15	1	15	3/8 MEDIUM PRESSURE	FC 211-6	FROM CASE DRAIN ON TRANSMISSION MOTOR TO TEE IN CASE DRAIN ON TRACTION MOTOR
213	6MP32	1	32	3/8 MEDIUM PRESSURE	FC 211-6	TRACTION VALVE PILOT DRAIN TO 90 DEGREE AT LEFT OIL FILTER
214						
215						
216						
217						
218						
219						
220						
221						
222						
223						
224						
225						
226						
227						
228						
229						
230						
231						
232						
233						
234						
235						
236						

IMPLIED TOLERANCES

ALL DIMENSIONS ARE IN INCHES - TOLERANCE UNLESS OTHERWISE SPECIFIED

NOMINAL SIZE RANGE		INCH PLUS OR MINUS		NOMINAL SIZE RANGE		METRIC PLUS OR MINUS	
OVER	TO	2 PLACE DECIMAL	3 PLACE DECIMAL	OVER	TO	1 PLACE DECIMAL	2 PLACE DECIMAL
0	6	.03	.005	0	150	.8	.13
6	24	.04	.008	150	600	1.0	.20
24	-	.06	.010	-	600	1.5	.25

UNLESS OTHERWISE SPECIFIED ALL MACHINED SURFACES WILL HAVE;
A SURFACE FINISH OF 125 MICROINCHES
ANGULAR TOLERANCE OF ± .50°
CONCENTRICITY WITHIN .010

THIRD ANGLE PROJECTION

UNLESS OTHERWISE SPECIFIED ALL WELDS SHOULD ADHERE TO THE LATEST HTT WELDING SPECIFICATION 101

CHANGE	R/L	REVISION	DATE
101704	A	NEW RELEASE	03-28-08

Description: HOSE KIT

Drawing Number: ----------

Machine Type: MK IV JUPITER

Model: 4016555.dft

Drawn: hwiggins

Date Drawn: 03-28-08

Weight: ----------

Scale: 1:4

APVD Desg: HW

APVD ChEng: JBR

Mat'l: ----------

HTT
Harsco Track Technologies
Harsco
Columbia, SC

Part Number: 4016555

Size: B

Sheet: 2 of 16

Plotted by hwiggins on 3/28/2008 4016555.dft

CONFIDENTIAL

© COPYRIGHT 2001 HARSCO TRACK TECHNOLOGIES. THIS DRAWING OR DOCUMENT IS THE PROPERTY OF HARSCO TRACK TECHNOLOGIES AND EMBODIES CONFIDENTIAL INFORMATION, TRADE SECRET INFORMATION, AND/OR KNOW-HOW THAT IS THE PROPERTY OF HARSCO TRACK TECHNOLOGIES. BY ACCEPTING THIS DRAWING OR DOCUMENT, THE RECIPIENT AGREES (1) NOT TO PROVIDE, OR OTHERWISE MAKE AVAILABLE, THE DRAWING OR DOCUMENT, OR ANY INFORMATION OR KNOW-HOW EMBODIED THEREIN, TO ANY THIRD PARTY AND (2) NOT TO REPRODUCE OR USE THE DRAWING OR DOCUMENT TO MANUFACTURE ANY APPARATUS OR DEVICE, WITHOUT THE PRIOR WRITTEN AUTHORIZATION OF HARSCO TRACK TECHNOLOGIES.

SOLID EDGE DRAWING

ITEM	SIZE/TYPE/ LENGTH	QTY	LENGTH	DESCRIPTION	HOSE TYPE	WHERE IT GOES ON THE MACHINE
						ENGINE AND HYDRAULIC TANK
301	16HP45	1	45	1 HIGH PRESSURE	FC 136-16	P-1 PUMP TO HARD LINE **4000 psi HOSE**
302	16HP45	1	45	1 HIGH PRESSURE	FC 136-16	P-2 PUMP TO HARD LINE **4000 psi HOSE**
303	12HP30	1	30	3/4 HIGH PRESSURE	GH 793-12	P-3 PUMP TO HARD LINE
304	12HP36.5	1	36 1/2	3/4 HIGH PRESSURE	GH 793-12	P-4 PUMP TO HARD LINE
305	12HP30	1	30	3/4 HIGH PRESSURE	GH 793-12	P-5 PUMP TO HARD LINE
306	12HP36.5	1	36 1/2	3/4 HIGH PRESSURE	GH 793-12	P-6 PUMP TO HARD LINE
307	12HP115	1	115	3/4 HIGH PRESSURE	GH 793-12	P-7 PUMP TO PORT 1 OF PRIORITY VALVE
308	8HP21	1	21	1/2 HIGH PRESSURE	GH 793-8	PORT 3 OF PRIORITY VALVE TO HARD LINE
309	20MP65	1	65	1 1/4 MEDIUM PRESSURE	GH 663-20	TOP 1 1/4 HARD LINE LEFT SIDE TO RELIEF VALVE
310	20MP56	1	56	1 1/4 MEDIUM PRESSURE	GH 663-20	BOTTOM LEFT SIDE HARD LINE TO 1 1/4 HARD LINE TO FILTER ON TOP OF TANK
311	20MP59	1	59	1 1/4 MEDIUM PRESSURE	GH 663-20	RIGHT SIDE HARD LINE TO TEE ON FILTER
312	20MP23	1	23	1 1/4 MEDIUM PRESSURE	GH 663-20	TEE ON LEFT FILTER TO TEE ON RIGHT FILTER
313	8MP47	1	47	1/2 MEDIUM PRESSURE	FC 211-8	LEFT SIDE HARD LINE TO CENTER COVER LEFT REAR FITTING
314	8MP45	1	45	1/2 MEDIUM PRESSURE	FC 211-8	REAR TRACTION MOTOR CASE DRAIN TO RIGHT CENTER REAR FITTING
315	8MP27	1	27	1/2 MEDIUM PRESSURE	FC 211-8	RIGHT SIDE BOTTOM 1/2 HARD LINE TO RIGHT CENTER INSIDE FITTING
316	8MP48	1	48	1/2 MEDIUM PRESSURE	FC 211-8	PORT 2 ON PRIORITY VALVE TO 3/4 TEE ON P-7 RETURN RELIEF
317	12MP33	1	33	3/4 MEDIUM PRESSURE	FC 211-12	P-1 CASE DRAIN TO HARD LINE ON ENGINE SIDE OF HYDRAULIC TANK
318	12MP33	1	33	3/4 MEDIUM PRESSURE	FC 211-12	P-2 CASE DRAIN TO HARD LINE ON ENGINE SIDE OF HYDRAULIC TANK
319	8MP42	1	42	1/2 MEDIUM PRESSURE	FC 211-8	HARD LINE RIGHT SIDE OF HYDRAULIC TANK TO CENTER OF HYRAULIC TANK
320						
321						
322						
323						
324						
325						
326						
327						
328						
329						
330						
331						
332						
333						
334						
335						
336						

IMPLIED TOLERANCES

ALL DIMENSIONS ARE IN INCHES - TOLERANCE UNLESS OTHERWISE SPECIFIED

NOMINAL SIZE RANGE		INCH PLUS OR MINUS		NOMINAL SIZE RANGE		METRIC PLUS OR MINUS	
OVER	TO	2 PLACE DECIMAL	3 PLACE DECIMAL	OVER	TO	1 PLACE DECIMAL	2 PLACE DECIMAL
0	6	.03	.005	0	150	.8	.13
6	24	.04	.008	150	600	1.0	.20
24	-	.06	.010	-	600	1.5	.25

UNLESS OTHERWISE SPECIFIED ALL MACHINED SURFACES WILL HAVE;
A SURFACE FINISH OF 125 MICROINCHES
ANGULAR TOLERANCE OF ± .50°
CONCENTRICITY WITHIN .010

THIRD ANGLE PROJECTION

UNLESS OTHERWISE SPECIFIED ALL WELDS SHOULD ADHERE TO THE LATEST HTT WELDING SPECIFICATION 101

CHANGE	R/L	REVISION	DATE
101704	A	NEW RELEASE	03-28-08

Description: HOSE KIT

Drawing Number: ----------

Machine Type: MK IV JUPITER

Model: 4016555.dft

Drawn: hwiggins

Date Drawn: 03-28-08

Weight: ----------

Scale: 1:4

APVD Desg: HW

APVD ChEng: JBR

Mat'l: ----------

HTT
Harsco Track Technologies
Harsco
Columbia, SC

Part Number: 4016555

Size: B

Sheet: 3 of 16

Plotted by hwiggins on 3/28/2008 4016555.dft

CONFIDENTIAL

© COPYRIGHT 2001 HARSCO TRACK TECHNOLOGIES. THIS DRAWING OR DOCUMENT IS THE PROPERTY OF HARSCO TRACK TECHNOLOGIES AND EMBODIES CONFIDENTIAL INFORMATION, TRADE SECRET INFORMATION, AND/OR KNOW-HOW THAT IS THE PROPERTY OF HARSCO TRACK TECHNOLOGIES. BY ACCEPTING THIS DRAWING OR DOCUMENT, THE RECIPIENT AGREES (1) NOT TO PROVIDE, OR OTHERWISE MAKE AVAILABLE, THE DRAWING OR DOCUMENT, OR ANY INFORMATION OR KNOW-HOW EMBODIED THEREIN, TO ANY THIRD PARTY AND (2) NOT TO REPRODUCE OR USE THE DRAWING OR DOCUMENT TO MANUFACTURE ANY APPARATUS OR DEVICE, WITHOUT THE PRIOR WRITTEN AUTHORIZATION OF HARSCO TRACK TECHNOLOGIES.

SOLID EDGE DRAWING

ITEM	SIZE/TYPE/ LENGTH	QTY	LENGTH	DESCRIPTION	HOSE TYPE	WHERE IT GOES ON THE MACHINE
				COMBO CLAMP		
401	16HP56	2	56	1 HIGH PRESSURE	FC 735-16	ROD END OF JACK CYLINDER TO JACK VALVE MANIFOLD B PORT (JACK UP)
402	16HP46	2	46	1 HIGH PRESSURE	FC 735-16	PISTON END OF JACK CYLINDER TO JACK VALVE MANIFOLD A PORT (JACK DOWN)
403	12HP76	2	76	3/4 HIGH PRESSURE	FC 735-12	ROD END OF HOOK CYLINDER TO CLAMP VALVE MANIFOLD B PORT (HOOK IN)
404	12HP76	2	76	3/4 HIGH PRESSURE	FC 735-12	PISTON END OF HOOK CYLINDER TO CLAMP VALVE MANIFOLD A PORT (HOOK OUT)
405	12HP77	1	77	3/4 HIGH PRESSURE	FC 735-12	TEE ON PISTON END OF RIGHT LINER CYLINDER TO LINER MANIFOLD A PORT (LINE RIGHT)
406	12HP77	1	77	3/4 HIGH PRESSURE	FC 735-12	TEE ON PISTON END OF LEFT LINER CYLINDER TO LINER MANIFOLD B PORT (LINE LEFT)
407	12HP36	2	36	3/4 HIGH PRESSURE	FC 735-12	TEE ON PISTON END OF LINER CYLINDER TO ROD END OF OPPOSITE SIDE LINER CYLINDER
408	8HP99	1	99	1/2 HIGH PRESSURE	FC 735-8	PISTON PORT ON BIAS CYLINDER TO CLAMP BIAS VALVE MANIFOLD B PORT (BIAS ON OR EXTEND)
409	8HP99	1	99	1/2 HIGH PRESSURE	FC 735-8	ROD PORT ON BIAS CYLINDER TO CLAMP BIAS VALVE MANIFOLD A PORT (BIAS OFF OR RETRACT)
410	6HP105	1	105	3/8 HIGH PRESSURE	FC 735-6	PILOT DRAIN PORT ON JACK VALVE MANIFOLD TO HARDLINE
411	4HP82	1	82	1/4 HIGH PRESSURE	FC 735-4	PISTON END OF RIGHT SLEW CYLINDER TO RIGHT SLEW VALVE MANIFOLD A PORT (SLEW RIGHT SIDE BACK)
412	4HP91	1	91	1/4 HIGH PRESSURE	FC 735-4	ROD END OR RIGHT SLEW CYLINDER TO RIGHT SLEW VALVE MANIFOLD B PORT (SLEW RIGHT SIDE FORWARD)
413	4HP91	1	91	1/4 HIGH PRESSURE	FC 735-4	ROD END OR LEFT SLEW CYLINDER TO LEFT SLEW VALVE MANIFOLD B PORT (SLEW LEFT SIDE FORWARD)
414	4HP82	1	82	1/4 HIGH PRESSURE	FC 735-4	PISTON END OF LEFT SLEW CYLINDER TO LEFT SLEW VALVE MANIFOLD A PORT (SLEW LEFT SIDE BACK)
415	8MP26	1	26	1/2 MEDIUM PRESSURE	FC 211-8	WARM UP VALVE TO RH LINER & CLAMP VALVE ASSY MANIFOLD TANK PORT
416						
417						
418						
419						
420						
421						
422						
423						
424						
425						
426						
427						
428						
429						
430						
431						
432						
433						
434						
435						
436						

IMPLIED TOLERANCES

ALL DIMENSIONS ARE IN INCHES - TOLERANCE UNLESS OTHERWISE SPECIFIED

NOMINAL SIZE RANGE		INCH PLUS OR MINUS		NOMINAL SIZE RANGE		METRIC PLUS OR MINUS	
OVER	TO	2 PLACE DECIMAL	3 PLACE DECIMAL	OVER	TO	1 PLACE DECIMAL	2 PLACE DECIMAL
0	6	.03	.005	0	150	.8	.13
6	24	.04	.008	150	600	1.0	.20
24	-	.06	.010	-	600	1.5	.25

UNLESS OTHERWISE SPECIFIED ALL MACHINED SURFACES WILL HAVE;
A SURFACE FINISH OF 125 MICROINCHES
ANGULAR TOLERANCE OF ± .50°
CONCENTRICITY WITHIN .010

THIRD ANGLE PROJECTION

UNLESS OTHERWISE SPECIFIED ALL WELDS SHOULD ADHERE TO THE LATEST HTT WELDING SPECIFICATION 101

CHANGE	R/L	REVISION	DATE
101704	A	NEW RELEASE	03-28-08

Description: HOSE KIT

Drawing Number: ----------

Machine Type: MK IV JUPITER

Model: 4016555.dft

Drawn: hwiggins

Date Drawn: 03-28-08

Weight: ----------

Scale: 1:4

APVD Desg: HW

APVD ChEng: JBR

Mat'l: ----------

HTT
Harsco Track Technologies
Harsco
Columbia, SC

Part Number: 4016555

Size: B

Sheet: 4 of 16

Plotted by hwiggins on 3/28/2008 4016555.dft

CONFIDENTIAL

© COPYRIGHT 2001 HARSCO TRACK TECHNOLOGIES. THIS DRAWING OR DOCUMENT IS THE PROPERTY OF HARSCO TRACK TECHNOLOGIES AND EMBODIES CONFIDENTIAL INFORMATION, TRADE SECRET INFORMATION, AND/OR KNOW-HOW THAT IS THE PROPERTY OF HARSCO TRACK TECHNOLOGIES. BY ACCEPTING THIS DRAWING OR DOCUMENT, THE RECIPIENT AGREES (1) NOT TO PROVIDE, OR OTHERWISE MAKE AVAILABLE, THE DRAWING OR DOCUMENT, OR ANY INFORMATION OR KNOW-HOW EMBODIED THEREIN, TO ANY THIRD PARTY AND (2) NOT TO REPRODUCE OR USE THE DRAWING OR DOCUMENT TO MANUFACTURE ANY APPARATUS OR DEVICE, WITHOUT THE PRIOR WRITTEN AUTHORIZATION OF HARSCO TRACK TECHNOLOGIES.

SOLID EDGE DRAWING

ITEM	SIZE/TYPE/ LENGTH	QTY	LENGTH	DESCRIPTION	HOSE TYPE	WHERE IT GOES ON THE MACHINE
				WORKHEAD VALVE AREA		
501	12HP90	8	90	3/4 HIGH PRESSURE	FC735-12	JUNCTION BLOCK TO VIBRATORS LEFT AND RIGHT
502	12HP41	1	41	3/4 HIGH PRESSURE	GH793-12	FROM RIGHT OUTSIDE TO LEFT CHECK VALVE OF RIGHT RELIEF
503	12HP47	1	47	3/4 HIGH PRESSURE	GH793-12	FROM RIGHT MIDDLE TEE TO RIGHT CHECK VALVE OF RIGHT RELIEF
504	12HP28	1	31	3/4 HIGH PRESSURE	GH793-12	FROM LEFT OUTSIDE TEE TO LEFT CHECK VALVE OF LEFT RELIEF
505	12HP32	1	32	3/4 HIGH PRESSURE	GH793-12	P1-P2 PRESSURE PIPE TO CHECK VALVE ON LINER MANIFOLD
506	12HP32	1	32	3/4 HIGH PRESSURE	GH793-12	P1-P2 PRESSURE PIPE TO CHECK VALVE ON BIAS MANIFOLD
507	12HP36	1	39	3/4 HIGH PRESSURE	GH793-12	FROM LEFT MIDDLE TEE TO RIGHT CHECK VALVE OF LEFT RELIEF
508	8HP92.5	4	92.5	1/2 HIGH PRESSURE	FC735-8	JUNCTION BLOCK TO CASE DRAINS LEFT AND RIGHT
509	16MP32.5	1	32.5	1 MEDIUM PRESSURE	FC211-16	RIGHT RETURN HARD LINE TO RETURN PORT ON VIBRATOR RELIEF VALVE
510	16MP24.5	1	24.5	1 MEDIUM PRESSURE	FC211-16	LEFT RETURN HARD LINE TO RETURN PORT ON VIBRATOR RELIEF VALVE
511						
512						
513						
514						
515						
516						
517						
518						
519						
520						
521						
522						
523						
524						
525						
526						
527						
528						
529						
530						
531						
532						
533						
534						
535						
536						

IMPLIED TOLERANCES

ALL DIMENSIONS ARE IN INCHES - TOLERANCE UNLESS OTHERWISE SPECIFIED

NOMINAL SIZE RANGE		INCH PLUS OR MINUS		NOMINAL SIZE RANGE		METRIC PLUS OR MINUS	
OVER	TO	2 PLACE DECIMAL	3 PLACE DECIMAL	OVER	TO	1 PLACE DECIMAL	2 PLACE DECIMAL
0	6	.03	.005	0	150	.8	.13
6	24	.04	.008	150	600	1.0	.20
24	-	.06	.010	-	600	1.5	.25

UNLESS OTHERWISE SPECIFIED ALL MACHINED SURFACES WILL HAVE;
A SURFACE FINISH OF 125 MICROINCHES
ANGULAR TOLERANCE OF ± .50°
CONCENTRICITY WITHIN .010

THIRD ANGLE PROJECTION

UNLESS OTHERWISE SPECIFIED ALL WELDS SHOULD ADHERE TO THE LATEST HTT WELDING SPECIFICATION 101

CHANGE	R/L	REVISION	DATE
101704	A	NEW RELEASE	03-28-08

Description: HOSE KIT

Drawing Number: ----------

Machine Type: MK IV JUPITER

Model: 4016555.dft

Drawn: hwiggins

Date Drawn: 03-28-08

Weight: ----------

Scale: 1:4

APVD Desg: HW

APVD ChEng: JBR

Mat'l: ----------

HTT
Harsco Track Technologies
Harsco
Columbia, SC

Part Number: 4016555

Size: B

Sheet: 5 of 16

Plotted by hwiggins on 3/28/2008 4016555.dft

CONFIDENTIAL

© COPYRIGHT 2001 HARSCO TRACK TECHNOLOGIES. THIS DRAWING OR DOCUMENT IS THE PROPERTY OF HARSCO TRACK TECHNOLOGIES AND EMBODIES CONFIDENTIAL INFORMATION, TRADE SECRET INFORMATION, AND/OR KNOW-HOW THAT IS THE PROPERTY OF HARSCO TRACK TECHNOLOGIES. BY ACCEPTING THIS DRAWING OR DOCUMENT, THE RECIPIENT AGREES (1) NOT TO PROVIDE, OR OTHERWISE MAKE AVAILABLE, THE DRAWING OR DOCUMENT, OR ANY INFORMATION OR KNOW-HOW EMBODIED THEREIN, TO ANY THIRD PARTY AND (2) NOT TO REPRODUCE OR USE THE DRAWING OR DOCUMENT TO MANUFACTURE ANY APPARATUS OR DEVICE, WITHOUT THE PRIOR WRITTEN AUTHORIZATION OF HARSCO TRACK TECHNOLOGIES.

SOLID EDGE DRAWING

ITEM	SIZE/TYPE/ LENGTH	QTY	LENGTH	DESCRIPTION	HOSE TYPE	WHERE IT GOES ON THE MACHINE
				WORKHEAD INSTALLATION		
601	12HP58	1	58	3/4 HIGH PRESSURE	FC735-12	A PORT TO PISTON END OF RIGHT W/H CYLINDER
602	12HP58	1	58	3/4 HIGH PRESSURE	FC735-12	B PORT TO ROD END OF RIGHT W/H CYLINDER
603	12HP58	1	58	3/4 HIGH PRESSURE	FC735-12	A PORT TO PISTON END OF LEFT W/H CYLINDER
604	12HP58	1	58	3/4 HIGH PRESSURE	FC735-12	B PORT TO ROD END OF LEFT W/H CYLINDER
605	12HP25	2	25	3/4 HIGH PRESSURE	FC735-12	3/4 BULKHEAD TO PISTON END OF LEFT AND RIGHT W/H CYLINDER
606	12HP16	1	16	3/4 HIGH PRESSURE	FC735-12	REAR 3/4 BULKHEAD TO ROD END OF RIGHT W/H CYLINDER
607	12HP20	1	20	3/4 HIGH PRESSURE	FC735-12	REAR 3/4 BULKHEAD TO ROD END OF LEFT W/H CYLINDER
608	8HP44	4	44	1/2 HIGH PRESSURE	FC735-8	FLOW CONTROL TO SQUEEZE MANIFOLDS
609	8HP59.5	4	59.5	1/2 HIGH PRESSURE	FC735-8	SQUEEZE IN AND OUT TO FLOW CONTROL LEFT AND RIGHT
610	4HP77.5	2	77.5	1/4 HIGH PRESSURE	FC735-4	FLOW CONTROL TO BULKHEAD TEE
611	4HP14	2	14	1/4 HIGH PRESSURE	FC735-4	FROM 1/4 BULKHEAD TO SQUEEZE PRESSURE PORT ON FLOW CONTROL VALVE
612	4HP37	1	37	1/4 HIGH PRESSURE	GH793-4	RIGHT SIDE TO LEFT SIDE BULKHEAD TEE TO 90 BULKHEAD
613	4HP34.5	1	34.5	1/4 HIGH PRESSURE	GH793-4	LEFT WORKHEAD TO SQUEEZE PRESSURE RELIEF VALVE
614	4HP18	2	18	1/4 HIGH PRESSURE	FC735-4	TRAVERSE LOCK CYLINDER TO PIPE
615	4HP20	2	20	1/4 HIGH PRESSURE	FC735-4	TRAVERSE LOCK CYLINDER TO PIPE
616	4HP37	1	37	1/4 HIGH PRESSURE	GH793-4	RIGHT WORKHEAD TO SQUEEZE PRESSURE RELIEF VALVE
617	8MP24	1	24	1/2 MEDIUM PRESSURE	FC211-16	SQUEEZE PRESSURE RELIEF VALVE TO RIGHT SIDE VIBRATOR MOTOR RETURN TEE
618						
619						
620						
621						
622						
623						
624						
625						
626						
627						
628						
629						
630						
631						
632						
633						
634						
635						
636						

IMPLIED TOLERANCES

ALL DIMENSIONS ARE IN INCHES - TOLERANCE UNLESS OTHERWISE SPECIFIED

NOMINAL SIZE RANGE		INCH PLUS OR MINUS		NOMINAL SIZE RANGE		METRIC PLUS OR MINUS	
OVER	TO	2 PLACE DECIMAL	3 PLACE DECIMAL	OVER	TO	1 PLACE DECIMAL	2 PLACE DECIMAL
0	6	.03	.005	0	150	.8	.13
6	24	.04	.008	150	600	1.0	.20
24	-	.06	.010	-	600	1.5	.25

UNLESS OTHERWISE SPECIFIED ALL MACHINED SURFACES WILL HAVE;
A SURFACE FINISH OF 125 MICROINCHES
ANGULAR TOLERANCE OF ± .50°
CONCENTRICITY WITHIN .010

THIRD ANGLE PROJECTION

UNLESS OTHERWISE SPECIFIED ALL WELDS SHOULD ADHERE TO THE LATEST HTT WELDING SPECIFICATION 101

CHANGE	R/L	REVISION	DATE
101704	A	NEW RELEASE	03-28-08

Description: HOSE KIT

Drawing Number: ----------

Machine Type: MK IV JUPITER

Model: 4016555.dft

Drawn: hwiggins

Date Drawn: 03-28-08

Weight: ----------

Scale: 1:4

APVD Desg: HW

APVD ChEng: JBR

Mat'l: ----------

HTT
Harsco Track Technologies
Harsco
Columbia, SC

Part Number: 4016555

Size: B

Sheet: 6 of 16

Plotted by hwiggins on 3/28/2008 4016555.dft

CONFIDENTIAL

© COPYRIGHT 2001 HARSCO TRACK TECHNOLOGIES. THIS DRAWING OR DOCUMENT IS THE PROPERTY OF HARSCO TRACK TECHNOLOGIES AND EMBODIES CONFIDENTIAL INFORMATION, TRADE SECRET INFORMATION, AND/OR KNOW-HOW THAT IS THE PROPERTY OF HARSCO TRACK TECHNOLOGIES. BY ACCEPTING THIS DRAWING OR DOCUMENT, THE RECIPIENT AGREES (1) NOT TO PROVIDE, OR OTHERWISE MAKE AVAILABLE, THE DRAWING OR DOCUMENT, OR ANY INFORMATION OR KNOW-HOW EMBODIED THEREIN, TO ANY THIRD PARTY AND (2) NOT TO REPRODUCE OR USE THE DRAWING OR DOCUMENT TO MANUFACTURE ANY APPARATUS OR DEVICE, WITHOUT THE PRIOR WRITTEN AUTHORIZATION OF HARSCO TRACK TECHNOLOGIES.

SOLID EDGE DRAWING

ITEM	SIZE/TYPE/ LENGTH	QTY	LENGTH	DESCRIPTION	HOSE TYPE	WHERE IT GOES ON THE MACHINE
						HYDRAULIC OIL COOLER
701	20MP50	1	50	1 1/4 MEDIUM PRESSURE	GH 663-20	LEFT SIDE VIBRATOR MOTOR RETURN LINE TO TEE ON INLET OF OIL COOLER THERMAL BY PASS VALVE
702	20MP58	1	58	1 1/4 MEDIUM PRESSURE	GH 663-20	RIGHT SIDE VIBRATOR MOTOR RETURN LINE TO TEE ON INLET OF OIL COOLER THERMAL BY PASS VALVE
703	24MP21-90	1	21	1 1/2 MEDIUM PRESSURE	GH 663-24	THERMAL BY PASS VALVE OUTLET TO TEE ON OIL COOLER INLET **90 DEGREE HOSE ENDS ON BOTH ENDS WITH HOSE ENDS ORIENTED 90 DEGREES APART**
704	32MP152	1	152	2 MEDIUM PRESSURE	GH 663-32	OUTLET OF COOLER TO RETURN MANIFOLD ON HYDRAULIC TANK
705	6HP10	1	10	3/8 HIGH PRESSURE	FC 735-6	P PORT ON OIL COOLER FAN CONTROL VALVE TO PORTED TEE ON LEFT SIDE P1-P2 PRESSURE LINE
706	8MP16.5	1	16 1/2	1/2 MEDIUM PRESSURE	FC 211-8	T PORT ON OIL COOLER FAN CONTROL VALVE TO PORTED TEE ON LEFT SIDE RETURN LINE
707	6HP26	1	26	3/8 HIGH PRESSURE	FC 735-6	A PORT ON OIL COOLER FAN CONTROL VALVE TO BOTTOM PORT ON OIL COOLER FAN MOTOR
708	8MP37	1	37	1/2 MEDIUM PRESSURE	FC 211-8	B PORT ON OIL COOLER FAN CONTROL VALVE TO TOP PORT ON OIL COOLER FAN MOTOR
709	6MP152	1	152	3/8 MEDIUM PRESSURE	FC 211-6	CASE DRAIN PORT ON OIL COOLER FAN MOTOR TO LEFT FRONT PORT OF CENTER COVER ON HYDRAULIC TANK
710						
711						
712						
713						
714						
715						
716						
717						
718						
719						
720						
721						
722						
723						
724						
725						
726						
727						
728						
729						
730						
731						
732						
733						
734						
735						

IMPLIED TOLERANCES

ALL DIMENSIONS ARE IN INCHES - TOLERANCE UNLESS OTHERWISE SPECIFIED

NOMINAL SIZE RANGE		INCH PLUS OR MINUS		NOMINAL SIZE RANGE		METRIC PLUS OR MINUS	
OVER	TO	2 PLACE DECIMAL	3 PLACE DECIMAL	OVER	TO	1 PLACE DECIMAL	2 PLACE DECIMAL
0	6	.03	.005	0	150	.8	.13
6	24	.04	.008	150	600	1.0	.20
24	-	.06	.010	-	600	1.5	.25

UNLESS OTHERWISE SPECIFIED ALL MACHINED SURFACES WILL HAVE;
A SURFACE FINISH OF 125 MICROINCHES
ANGULAR TOLERANCE OF ± .50°
CONCENTRICITY WITHIN .010

THIRD ANGLE PROJECTION

UNLESS OTHERWISE SPECIFIED ALL WELDS SHOULD ADHERE TO THE LATEST HTT WELDING SPECIFICATION 101

CHANGE	R/L	REVISION	DATE
101704	A	NEW RELEASE	03-28-08

Description: HOSE KIT

Drawing Number: ----------

Machine Type: MK IV JUPITER

Model: 4016555.dft

Drawn: hwiggins

Date Drawn: 03-28-08

Weight: ----------

Scale: 1:4

APVD Desg: HW

APVD ChEng: JBR

Mat'l: ----------

HTT
Harsco Track Technologies
Harsco
Columbia, SC

Part Number: 4016555

Size: B

Sheet: 7 of 16

Plotted by hwiggins on 3/28/2008 4016555.dft

CONFIDENTIAL

© COPYRIGHT 2001 HARSCO TRACK TECHNOLOGIES. THIS DRAWING OR DOCUMENT IS THE PROPERTY OF HARSCO TRACK TECHNOLOGIES AND EMBODIES CONFIDENTIAL INFORMATION, TRADE SECRET INFORMATION, AND/OR KNOW-HOW THAT IS THE PROPERTY OF HARSCO TRACK TECHNOLOGIES. BY ACCEPTING THIS DRAWING OR DOCUMENT, THE RECIPIENT AGREES (1) NOT TO PROVIDE, OR OTHERWISE MAKE AVAILABLE, THE DRAWING OR DOCUMENT, OR ANY INFORMATION OR KNOW-HOW EMBODIED THEREIN, TO ANY THIRD PARTY AND (2) NOT TO REPRODUCE OR USE THE DRAWING OR DOCUMENT TO MANUFACTURE ANY APPARATUS OR DEVICE, WITHOUT THE PRIOR WRITTEN AUTHORIZATION OF HARSCO TRACK TECHNOLOGIES.

SOLID EDGE DRAWING

ITEM	SIZE/TYPE/ LENGTH	QTY	LENGTH	DESCRIPTION	HOSE TYPE	WHERE IT GOES ON THE MACHINE
				REAR TRACTION		
801	20SHP56	1	33	1-1/4 SUPER HIGH PRESS	FC 136-20	TRACTION VALVE TO MOTOR (HOSE END P/N B3913Y03) - **TOP**
802	20SHP56	1	45	1-1/4 SUPER HIGH PRESS	FC 136-20	TRACTION VALVE TO MOTOR (HOSE END P/N AB3913Y03) - **BOTTOM**
803	20SHP49	1	49	1-1/4 SUPER HIGH PRESS	FC 136-20	FROM 1-1/2" PRESSURE HARD LINE TO PRESSURE PORT AT TRACTION VALVE
804	8HP52	1	37	1/2 HIGH PRESSURE	GH 793-8	FROM REAR 1/2 45 DEGREE FITTING TO TOP PORT ON TRANSMISSION MOTOR
805	8HP51.5	1	40	1/2 HIGH PRESSURE	GH 793-8	FROM FRONT 1/2 45 DEGREE TO BOTTOM PORT ON TRANSMISSION MOTOR
806	8HP35	1	35	1/2 HIGH PRESSURE	GH 793-8	FROM REAR JUNCTION BLK ON 3" CLAMP TO REAR JUNCTION BLK ON 2" CLAMP ON TRACTION VALVE MOUNTING PLATE
807	8HP81	1	81	1/2 HIGH PRESSURE	GH 793-8	FROM REAR JUNCTION BLOCK ON 3" CLAMP TO TOP OUTSIDE JUNCTION BLOCK ON RIGHT SIDE OF FRAME **HOSE ENDS: JIC SWIVEL X LONG 90 JIC SW**
808	8HP38	1	38	1/2 HIGH PRESSURE	GH 793-8	FROM MIDDLE JUNCTION BLOCK ON 3" CLAMP TO "Y" PORT ON TRACTION VALVE
809	8HP68	1	68	1/2 HIGH PRESSURE	GH 793-8	FROM FRONT JUNCTION BLK ON INSIDE OF TRACTION VALVE MTG PLATE TO BOTTOM JUNCTION BLK ON LEFT SIDE OF FRAME **HOSE ENDS: JIC SWIVEL X SHORT 90 JIC SW**
810	6HP24	1	24	3/8 HIGH PRESSURE	GH 793-6	P PORT ON TRACTION VALVE TO P PORT ON LOCK OUT VALVE
811	6HP24	2	24	3/8 HIGH PRESSURE	GH 793-6	FROM 1/2 TEES ON HARD LINE TO TRANSMISSION MOTOR RELIEF
812	4HP19	1	19	1/4 HIGH PRESSURE	GH 793-4	CHECK VALVE TO CHECK VALVE ON TRACTION VALVE
813	4HP70	1	72	1/4 HIGH PRESSURE	GH 793-4	TEE ON CHECK VALVE TO 1/2 HARD LINE ON LEFT SIDE OF MACHINE
814	4HP18	1	18	1/4 HIGH PRESSURE	GH 793-4	CLUTCH PRESSURE PORT TO BULKHEAD
815	8MP67	1	40	1/2 MEDIUM PRESSURE	FC 211-8	CASE DRAIN ON TRACTION MOTOR TO HARD LINE
816	8MP76	1	76	1/2 MEDIUM PRESSURE	FC 211-8	FROM MIDDLE JUNCTION BLOCK ON 3" CLAMP TO BOTTOM OUTSIDE JUNCTION BLOCK ON RIGHT SIDE OF FRAME **HOSE ENDS: JIC SWIVEL X LONG 90 JIC SW**
817	8MP69	1	69	1/2 MEDIUM PRESSURE	FC 211-8	FROM BULKHEAD IN TRACTION VALVE PLATE TO TOP JUNCTION BLOCK ON LEFT SIDE OF CAB **HOSE ENDS: JIC SWIVEL X SHORT 90 JIC SW**
818	6MP21	1	21	3/8 MEDIUM PRESSURE	FC 211-6	TRACTION VALVE RETURN TO TANK PORT ON LOCKOUT VALVE
819	6MP26	1	26	3/8 MEDIUM PRESSURE	FC 211-6	FROM HARD LINE TO RETURN TEE ON P-1 PUMP CONTROL VALVE
820	6MP51	1	40	3/8 MEDIUM PRESSURE	FC 211-6	FROM CASE DRAIN ON TRANSMISSION CIRCULATION MOTOR TO BULKHEAD ON REAR TRACTION VALVE MOUNTING PLATE
821	8HP52	1	52	1/2 HIGH PRESSURE	GH 793-8	INSIDE HARDLINE ON LEFT SIDE OF FRAME TO TOP INSIDE HARDLINE.
822	8MP52	1	52	1/2 MEDIUM PRESSURE	FC 211-8	OUTSIDE HARDLINE ON LEFT SIDE OF FRAME TO OUTSIDE HARDLINE
823	8HP52	1	52	1/2 MEDIUM PRESSURE	FC 211-8	INSIDE HARDLINE ON RIGHT SIDE OF FRAME AT REAR OF CAB AT TOP OF BOTTOM INSIDE TO TOP INSIDE BOTTOM OF HARDLINE.
824	8MP52	1	52	1/2 HIGH PRESSURE	GH 793-8	INSIDE HARDLINE ON RIGHT SIDE OF FRAME AT REAR OF CAB AT TOP OF BOTTOM OUTSIDE TO TOP OUTSIDE BOTTOM OF HARDLINE.
825	8MP52	1	51	1/2 HIGH PRESSURE	GH 793-8	FRAME NEAR CAB AT TOP BOTTOM OF HARDLINE TO TOP OF HARDLINE, BOTTOM OUTSIDE HARDLINE WITH TEE ON IT.
826						
827						
828						
829						
830						
831						
832						
833						
834						
835						
836						

IMPLIED TOLERANCES

ALL DIMENSIONS ARE IN INCHES - TOLERANCE UNLESS OTHERWISE SPECIFIED

NOMINAL SIZE RANGE		INCH PLUS OR MINUS		NOMINAL SIZE RANGE		METRIC PLUS OR MINUS	
OVER	TO	2 PLACE DECIMAL	3 PLACE DECIMAL	OVER	TO	1 PLACE DECIMAL	2 PLACE DECIMAL
0	6	.03	.005	0	150	.8	.13
6	24	.04	.008	150	600	1.0	.20
24	-	.06	.010	-	600	1.5	.25

UNLESS OTHERWISE SPECIFIED ALL MACHINED SURFACES WILL HAVE;
A SURFACE FINISH OF 125 MICROINCHES
ANGULAR TOLERANCE OF ± .50°
CONCENTRICITY WITHIN .010

THIRD ANGLE PROJECTION

UNLESS OTHERWISE SPECIFIED ALL WELDS SHOULD ADHERE TO THE LATEST HTT WELDING SPECIFICATION 101

CHANGE	R/L	REVISION	DATE
101704	A	NEW RELEASE	03-28-08

Description: HOSE KIT

Drawing Number: ----------

Machine Type: MK IV JUPITER

Model: 4016555.dft

Drawn: hwiggins

Date Drawn: 03-28-08

Weight: ----------

Scale: 1:4

APVD Desg: HW

APVD ChEng: JBR

Mat'l: ----------

HTT
Harsco Track Technologies
Harsco
Columbia, SC

Part Number: 4016555

Size: B

Sheet: 8 of 16

Plotted by hwiggins on 3/28/2008 4016555.dft

CONFIDENTIAL

© COPYRIGHT 2001 HARSCO TRACK TECHNOLOGIES. THIS DRAWING OR DOCUMENT IS THE PROPERTY OF HARSCO TRACK TECHNOLOGIES AND EMBODIES CONFIDENTIAL INFORMATION, TRADE SECRET INFORMATION, AND/OR KNOW-HOW THAT IS THE PROPERTY OF HARSCO TRACK TECHNOLOGIES. BY ACCEPTING THIS DRAWING OR DOCUMENT, THE RECIPIENT AGREES (1) NOT TO PROVIDE, OR OTHERWISE MAKE AVAILABLE, THE DRAWING OR DOCUMENT, OR ANY INFORMATION OR KNOW-HOW EMBODIED THEREIN, TO ANY THIRD PARTY AND (2) NOT TO REPRODUCE OR USE THE DRAWING OR DOCUMENT TO MANUFACTURE ANY APPARATUS OR DEVICE, WITHOUT THE PRIOR WRITTEN AUTHORIZATION OF HARSCO TRACK TECHNOLOGIES.

SOLID EDGE DRAWING

ITEM	SIZE/TYPE/ LENGTH	QTY	LENGTH	DESCRIPTION	HOSE TYPE	WHERE IT GOES ON THE MACHINE
				REAR LOCKOUTS		
901	4HP56.5	1	56 1/2	1/4 HIGH PRESSURE	GH 793-4	B PORT ON VALVE TO TOP BULKHEAD TEE
902	4HP48	1	48	1/4 HIGH PRESSURE	GH 793-4	A PORT ON VALVE TO BOTTOM BULKHEAD TEE
903						
904						
905						
				EMERGENCY PUMP		
906	6HP78	1	78	3/8 HIGH PRESSURE	GH 793-6	OUT TO P-1 AND P-2 SYSTEM
907	6MP83	1	83	3/8 MEDIUM PRESSURE	FC 211-6	EMERGENCY PUMP CASE DRAIN TO RIGHT COVER FRONT OUTSIDE FITTING
908	6MP57	1	57	3/8 MEDIUM PRESSURE	FC 211-6	EMERGENCY PUMP SUCTION TO SUPPLY
909						
910						
911						
				DECEL RELIEF VALVE		
912	4HP17	1	17	1/4 HIGH PRESSURE	GH 793-4	P PORT ON WORKHEAD VALVE TO FILTER
913	4HP22	1	22	1/4 HIGH PRESSURE	GH 793-4	CHECK VALVE IN OUT PORT OF FILTER TEE IN PORT 2 OF DECEL VALVE
914	4HP24	1	24	1/4 HIGH PRESSURE	GH 793-4	PORT 1 OF DECEL VALVE TO HARD LINE LEFT SIDE
915	4HP62	1	62	1/4 HIGH PRESSURE	GH 793-4	PORT 3 OF DECEL VALVE TO HARD LINE RIGHT SIDE
916						
917						
918						
919						
920						
921						
922						
923						
924						
925						
926						
927						
928						
929						
930						
931						
932						
933						
934						

IMPLIED TOLERANCES

ALL DIMENSIONS ARE IN INCHES - TOLERANCE UNLESS OTHERWISE SPECIFIED

NOMINAL SIZE RANGE		INCH PLUS OR MINUS		NOMINAL SIZE RANGE		METRIC PLUS OR MINUS	
OVER	TO	2 PLACE DECIMAL	3 PLACE DECIMAL	OVER	TO	1 PLACE DECIMAL	2 PLACE DECIMAL
0	6	.03	.005	0	150	.8	.13
6	24	.04	.008	150	600	1.0	.20
24	-	.06	.010	-	600	1.5	.25

UNLESS OTHERWISE SPECIFIED ALL MACHINED SURFACES WILL HAVE;
A SURFACE FINISH OF 125 MICROINCHES
ANGULAR TOLERANCE OF ± .50°
CONCENTRICITY WITHIN .010

THIRD ANGLE PROJECTION

UNLESS OTHERWISE SPECIFIED ALL WELDS SHOULD ADHERE TO THE LATEST HTT WELDING SPECIFICATION 101

CHANGE	R/L	REVISION	DATE
101704	A	NEW RELEASE	03-28-08

Description: HOSE KIT

Drawing Number: ----------

Machine Type: MK IV JUPITER

Model: 4016555.dft

Drawn: hwiggins

Date Drawn: 03-28-08

Weight: ----------

Scale: 1:4

APVD Desg: HW

APVD ChEng: JBR

Mat'l: ----------

HTT
Harsco Track Technologies
Harsco
Columbia, SC

Part Number: 4016555

Size: B

Sheet: 9 of 16

Plotted by hwiggins on 3/28/2008 4016555.dft

CONFIDENTIAL

© COPYRIGHT 2001 HARSCO TRACK TECHNOLOGIES. THIS DRAWING OR DOCUMENT IS THE PROPERTY OF HARSCO TRACK TECHNOLOGIES AND EMBODIES CONFIDENTIAL INFORMATION, TRADE SECRET INFORMATION, AND/OR KNOW-HOW THAT IS THE PROPERTY OF HARSCO TRACK TECHNOLOGIES. BY ACCEPTING THIS DRAWING OR DOCUMENT, THE RECIPIENT AGREES (1) NOT TO PROVIDE, OR OTHERWISE MAKE AVAILABLE, THE DRAWING OR DOCUMENT, OR ANY INFORMATION OR KNOW-HOW EMBODIED THEREIN, TO ANY THIRD PARTY AND (2) NOT TO REPRODUCE OR USE THE DRAWING OR DOCUMENT TO MANUFACTURE ANY APPARATUS OR DEVICE, WITHOUT THE PRIOR WRITTEN AUTHORIZATION OF HARSCO TRACK TECHNOLOGIES.

SOLID EDGE DRAWING

ITEM	SIZE/TYPE/ LENGTH	QTY	LENGTH	DESCRIPTION	HOSE TYPE	WHERE IT GOES ON THE MACHINE
				BRAKE HOSES		
1001	12MP181	1	181	3/4 MEDIUM PRESSURE	FC 350A-12	DRYER TO AIR TANK
1002	8MP24	1	24	1/2 MEDIUM PRESSURE	FC 350A-8	TEE TO BRAKE PRESSURE PROTECTION VALVE
1003	8MP301	1	301	1/2 MEDIUM PRESSURE	FC 350A-8	CENTER BULKHEAD TEE TO AIR TANK
1004	8MP24	4	24	1/2 MEDIUM PRESSURE	FC 350A-8	AIR TO FRONT BRAKE SUPPLY VALVE
1005	8MP78	1	78	1/2 MEDIUM PRESSURE	FC 350A-8	BULKHEAD TO REAR BRAKE SUPPLY VALVE
1006	8MP209	1	209	1/2 MEDIUM PRESSURE	FC 350A-8	CENTER BULKHEAD TO REAR BULKHEAD
1007	4PM208	2	208	1/4 MEDIUM PRESSURE	FC 350A-4	CENTER BULKHEAD TO FRONT BRAKE VALVES
1008	4PM243	2	243	1/4 MEDIUM PRESSURE	FC 350A-4	E-STOP BRAKE VALVE (MAC) PORT 3 ORIFICE & SNUBBER FITTING TO CENTER BULKHEADS
1009	4PM38	1	38	1/4 MEDIUM PRESSURE	FC 350A-4	INDEX BRAKE VALVE TO SECOND SHUTTLE ON E-STOP BRAKE VALVE (MAC) PORT 2
1010	4PM78	1	78	1/4 MEDIUM PRESSURE	FC 350A-4	FRONT BRAKE TO BULKHEAD PLATE
1011	4PM97	1	97	1/4 MEDIUM PRESSURE	FC 350A-4	FRONT BRAKE RELAY TO BULKHEAD PLATE
1012	4PM102	2	102	1/4 MEDIUM PRESSURE	FC 350A-4	REAR SERVICE BRAKE RELAY VALVE PILOT & REAR FAIL-SAFE RELAY VALVE PILOT TO FITTINGS UNDER CAB
1013	4LP75	1	75	1/4 LOW PRESSURE	2556-4	VENT AIR LINE
1014	6MP210	1	210	3/8 MEDIUM PRESSURE	FC 350A-6	CENTER AIR MANIFOLD TO INDEX BRAKE VALVE ASSEMBLY SUPPLY PORT TEE
1015	6MP10	1	10	3/8 MEDIUM PRESSURE	FC 350A-6	TEE ON INDEX BRAKE VALVE ASSEMBLY SUPPLY PORT TO AIR HORN VALVE
1016	4MP36	1	36	1/4 MEDIUM PRESSURE	FC 350A-4	REAR BULKHEAD SUPPLY TO SUPPLY MAC VALVE PORT 3
1017	8MP24	1	24	1/2 MEDIUM PRESSURE	FC 350A-8	FRONT BRAKE VALVE TO FRONT BRAKE VALVE
1018	8MP24	1	24	1/2 MEDIUM PRESSURE	FC 350A-8	REAR BRAKE VALVE TO REAR BRAKE VALVE
1019	6MP210	1	32	3/8 MEDIUM PRESSURE	FC 350A-6	BRAKE PROTECTION VALVE TO SHADOW BOARD VALVE SUPPLY
1020	6MP210	1	17.5	3/8 MEDIUM PRESSURE	FC 350A-6	AIR DRYER TO PULSE TANK
1021						
1022						
1023						
1024						
1025						
1026						
1027						
1028						
1029						
1030						
1031						
1032						
1033						
1034						
1035						
1036						

IMPLIED TOLERANCES

ALL DIMENSIONS ARE IN INCHES - TOLERANCE UNLESS OTHERWISE SPECIFIED

NOMINAL SIZE RANGE		INCH PLUS OR MINUS		NOMINAL SIZE RANGE		METRIC PLUS OR MINUS	
OVER	TO	2 PLACE DECIMAL	3 PLACE DECIMAL	OVER	TO	1 PLACE DECIMAL	2 PLACE DECIMAL
0	6	.03	.005	0	150	.8	.13
6	24	.04	.008	150	600	1.0	.20
24	-	.06	.010	-	600	1.5	.25

UNLESS OTHERWISE SPECIFIED ALL MACHINED SURFACES WILL HAVE;
A SURFACE FINISH OF 125 MICROINCHES
ANGULAR TOLERANCE OF ± .50°
CONCENTRICITY WITHIN .010

THIRD ANGLE PROJECTION

UNLESS OTHERWISE SPECIFIED ALL WELDS SHOULD ADHERE TO THE LATEST HTT WELDING SPECIFICATION 101

CHANGE	R/L	REVISION	DATE
101704	A	NEW RELEASE	03-28-08

Description: HOSE KIT

Drawing Number: ----------

Machine Type: MK IV JUPITER

Model: 4016555.dft

Drawn: hwiggins

Date Drawn: 03-28-08

Weight: ----------

Scale: 1:4

APVD Desg: HW

APVD ChEng: JBR

Mat'l: ----------

HTT
Harsco Track Technologies
Harsco
Columbia, SC

Part Number: 4016555

Size: B

Sheet: 10 of 16

Plotted by hwiggins on 3/28/2008 4016555.dft

CONFIDENTIAL

© COPYRIGHT 2001 HARSCO TRACK TECHNOLOGIES. THIS DRAWING OR DOCUMENT IS THE PROPERTY OF HARSCO TRACK TECHNOLOGIES AND EMBODIES CONFIDENTIAL INFORMATION, TRADE SECRET INFORMATION, AND/OR KNOW-HOW THAT IS THE PROPERTY OF HARSCO TRACK TECHNOLOGIES. BY ACCEPTING THIS DRAWING OR DOCUMENT, THE RECIPIENT AGREES (1) NOT TO PROVIDE, OR OTHERWISE MAKE AVAILABLE, THE DRAWING OR DOCUMENT, OR ANY INFORMATION OR KNOW-HOW EMBODIED THEREIN, TO ANY THIRD PARTY AND (2) NOT TO REPRODUCE OR USE THE DRAWING OR DOCUMENT TO MANUFACTURE ANY APPARATUS OR DEVICE, WITHOUT THE PRIOR WRITTEN AUTHORIZATION OF HARSCO TRACK TECHNOLOGIES.

SOLID EDGE DRAWING

ITEM	SIZE/TYPE/ LENGTH	QTY	LENGTH	DESCRIPTION	HOSE TYPE	WHERE IT GOES ON THE MACHINE
						SEAT ASSEMBLY (LHC= Left Hand Console)
1101	4MP49.5	1	49 1/2	1/4 MEDIUM PRESSURE	FC 350A-4	FAILSAFE VALVE IN PORT TO LHC BULKHEAD (OUTSIDE)
1102	4MP7	1	7	1/4 MEDIUM PRESSURE	FC 350A-4	SERVICE BRAKE VALVE DELIVERY PORT TO LHC BULKHEAD (INSDE)
1103	4MP12	2	12	1/4 MEDIUM PRESSURE	FC 350A-4	SPRING BRAKE BLOWDOWN VALVE PORT 1 TO TEE ON SERVICE BRAKE VALVE SUPPLY PORT
1104	4MP7.5	1	7 1/2	1/4 MEDIUM PRESSURE	FC 350A-4	SERVICE BRAKE VALVE SUPPLY PORT TO LHC BULKHEAD (INSIDE)
1105	4MP190	2	190	1/4 MEDIUM PRESSURE	FC 350A-4	AIR SUPPLY UNDER CAB TO AIR SUPPLY LHC BULKHEAD (OUTSIDE)
1106	4MP200	1	200	1/4 MEDIUM PRESSURE	FC 350A-4	FAIL-SAFE VALVE DELIVERY PORT TO BULKHEAD TEE UNDER CAB
1107	4MP200	1	200	1/4 MEDIUM PRESSURE	FC 350A-4	SERVICE BRAKE DELIVERY LHC BULKEAD (OUTSIDE) TO 1ST SHUTTLE VALVE ON E-STOP BRAKE VALVE UNDER CAB
1108						
1109	4MP15	1	15	1/4 MEDIUM PRESSURE	FC 350A-4	SPRING BRAKE BLOWDOWN VALVE PORT 2 TO LHC BULKHEAD (INSIDE)
1110						
1111						
1112						
1113						
1114						
1115						
1116						
1117						
1118						
1119						
1120						
1121						
1122						
1123						
1124						
1125						
1126						
1127						
1128						
1129						
1130						
1131						
1132						
1133						
1134						
1135						
1136						

IMPLIED TOLERANCES

ALL DIMENSIONS ARE IN INCHES - TOLERANCE UNLESS OTHERWISE SPECIFIED

NOMINAL SIZE RANGE		INCH PLUS OR MINUS		NOMINAL SIZE RANGE		METRIC PLUS OR MINUS	
OVER	TO	2 PLACE DECIMAL	3 PLACE DECIMAL	OVER	TO	1 PLACE DECIMAL	2 PLACE DECIMAL
0	6	.03	.005	0	150	.8	.13
6	24	.04	.008	150	600	1.0	.20
24	-	.06	.010	-	600	1.5	.25

UNLESS OTHERWISE SPECIFIED ALL MACHINED SURFACES WILL HAVE;
A SURFACE FINISH OF 125 MICROINCHES
ANGULAR TOLERANCE OF ± .50°
CONCENTRICITY WITHIN .010

THIRD ANGLE PROJECTION

UNLESS OTHERWISE SPECIFIED ALL WELDS SHOULD ADHERE TO THE LATEST HTT WELDING SPECIFICATION 101

CHANGE	R/L	REVISION	DATE
101704	A	NEW RELEASE	03-28-08

Description: HOSE KIT

Drawing Number: ----------

Machine Type: MK IV JUPITER

Model: 4016555.dft

Drawn: hwiggins

Date Drawn: 03-28-08

Weight: ----------

Scale: 1:4

APVD Desg: HW

APVD ChEng: JBR

Mat'l: ----------

HTT
Harsco Track Technologies
Harsco
Columbia, SC

Part Number: 4016555

Size: B

Sheet: 11 of 16

Plotted by hwiggins on 3/28/2008 4016555.dft

CONFIDENTIAL

© COPYRIGHT 2001 HARSCO TRACK TECHNOLOGIES. THIS DRAWING OR DOCUMENT IS THE PROPERTY OF HARSCO TRACK TECHNOLOGIES AND EMBODIES CONFIDENTIAL INFORMATION, TRADE SECRET INFORMATION, AND/OR KNOW-HOW THAT IS THE PROPERTY OF HARSCO TRACK TECHNOLOGIES. BY ACCEPTING THIS DRAWING OR DOCUMENT, THE RECIPIENT AGREES (1) NOT TO PROVIDE, OR OTHERWISE MAKE AVAILABLE, THE DRAWING OR DOCUMENT, OR ANY INFORMATION OR KNOW-HOW EMBODIED THEREIN, TO ANY THIRD PARTY AND (2) NOT TO REPRODUCE OR USE THE DRAWING OR DOCUMENT TO MANUFACTURE ANY APPARATUS OR DEVICE, WITHOUT THE PRIOR WRITTEN AUTHORIZATION OF HARSCO TRACK TECHNOLOGIES.

SOLID EDGE DRAWING

FRONT AXLE SUB-ASSEMBLY (DELIVER THESE HOSES TO SUB-ASSEMBLY)

1201	6HP30	1	30	3/8 HIGH PRESSURE	GH 793-6	TOP BULKHEAD TEE TO P PORT ON LOCK OUT VALVE
1202	6HP22	1	22	3/8 HIGH PRESSURE	GH 793-6	A PORT ON LOCK OUT VALVE TO TEE ON TOP JUNCTION
1203	6HP27	1	27	3/8 HIGH PRESSURE	GH 793-6	B PORT ON LOCK OUT VALVE TO TEE ON MIDDLE JUNCTION
1204	6HP25	1	25	3/8 HIGH PRESSURE	GH 793-6	LEFT CLAMP TOP JUNCTION TO LEFT HAND CYLINDER ROD END
1205	6HP23	1	23	3/8 HIGH PRESSURE	GH 793-6	LEFT CLAMP BOTTOM JUNCTION TO SOLENOID VALVE ON PISTON END OF LEFT CYLINDER
1206	6HP48	1	48	3/8 HIGH PRESSURE	GH 793-6	BOTTOM TEE ON LEFT JUNCTION TO SOLENOID VALVE ON PISTON END OF RIGHT CYLINDER
1207	6HP52	1	52	3/8 HIGH PRESSURE	GH 793-6	TOP TEE ON LEFT JUNCTION TO ROD END OF RIGHT CYLINDER
1208	6MP31	1	31	3/8 MEDIUM PRESSURE	FC 211-6	T PORT ON LOCK OUT VALVE TO BOTTOM FRONT BULKHEAD TEE
1209	6MP22	1	22	3/8 MEDIUM PRESSURE	FC 350A-6	FROM LEFT FRONT SERVICE BRAKE CHAMBER TO RELAY VALVE
1210	6MP54	1	54	3/8 MEDIUM PRESSURE	FC 350A-6	FROM RIGHT FRONT SERVICE BRAKE CHAMBER TO RELAY VALVE
1211	8MP39	1	39	1/2 MEDIUM PRESSURE	FC 350A-8	FROM LEFT FRONT FAIL-SAFE BRAKE CHAMBER TO FAIL-SAFE RELAY VALVE DELIVERY PORT
1212	8MP39	1	39	1/2 MEDIUM PRESSURE	FC 350A-8	FROM RIGHT FRONT FAIL-SAFE BRAKE CHAMBER TO FAIL-SAFE RELAY VALVE DELIVERY PORT
1213	--------	1	12 1/2	1 BLUE SUCTION	2661-16	FROM ELBOW ON BOTTOM OF TRANSMISSION TO SUCTION PORT OF PUMP
1214	4MP15	1	15	1/4 MEDIUM PRESSURE	FC 350A-4	FROM SERVICE BRAKE RELAY VALVE DELIVERY PORT TO FAIL-SAFE RELAY VALVE EXHAUST PORT
1215						
1216						
1217						
1218						
1219						
1220						
1221						
1222						
1223						
1224						
1225				NOTE: SWIVEL TEES MUST BE LOCATED ON RIGHT SIDE OF LEFT CLAMP AS DETERMINED BY SITTING IN THE OPERATOR'S SEAT FACING FORWARD.		
1226						
1227						
1228						
1229						
1230						
1231						
1232						
1233						
1234						
1235						
1236						

IMPLIED TOLERANCES

ALL DIMENSIONS ARE IN INCHES - TOLERANCE UNLESS OTHERWISE SPECIFIED

NOMINAL SIZE RANGE		INCH PLUS OR MINUS		NOMINAL SIZE RANGE		METRIC PLUS OR MINUS	
OVER	TO	2 PLACE DECIMAL	3 PLACE DECIMAL	OVER	TO	1 PLACE DECIMAL	2 PLACE DECIMAL
0	6	.03	.005	0	150	.8	.13
6	24	.04	.008	150	600	1.0	.20
24	-	.06	.010	-	600	1.5	.25

UNLESS OTHERWISE SPECIFIED ALL MACHINED SURFACES WILL HAVE;
A SURFACE FINISH OF 125 MICROINCHES
ANGULAR TOLERANCE OF ± .50°
CONCENTRICITY WITHIN .010

THIRD ANGLE PROJECTION

UNLESS OTHERWISE SPECIFIED ALL WELDS SHOULD ADHERE TO THE LATEST HTT WELDING SPECIFICATION 101

CHANGE	R/L	REVISION	DATE
101704	A	NEW RELEASE	03-28-08

Description: HOSE KIT

Drawing Number: ----------

Machine Type: MK IV JUPITER

Model: 4016555.dft

Drawn: hwiggins

Date Drawn: 03-28-08

Weight: ----------

Scale: 1:4

APVD Desg: HW

APVD ChEng: JBR

Mat'l: ----------

HTT
Harsco Track Technologies
Harsco
Columbia, SC

Part Number: 4016555

Size: B

Sheet: 12 of 16

Plotted by hwiggins on 3/28/2008 4016555.dft

CONFIDENTIAL

© COPYRIGHT 2001 HARSCO TRACK TECHNOLOGIES. THIS DRAWING OR DOCUMENT IS THE PROPERTY OF HARSCO TRACK TECHNOLOGIES AND EMBODIES CONFIDENTIAL INFORMATION, TRADE SECRET INFORMATION, AND/OR KNOW-HOW THAT IS THE PROPERTY OF HARSCO TRACK TECHNOLOGIES. BY ACCEPTING THIS DRAWING OR DOCUMENT, THE RECIPIENT AGREES (1) NOT TO PROVIDE, OR OTHERWISE MAKE AVAILABLE, THE DRAWING OR DOCUMENT, OR ANY INFORMATION OR KNOW-HOW EMBODIED THEREIN, TO ANY THIRD PARTY AND (2) NOT TO REPRODUCE OR USE THE DRAWING OR DOCUMENT TO MANUFACTURE ANY APPARATUS OR DEVICE, WITHOUT THE PRIOR WRITTEN AUTHORIZATION OF HARSCO TRACK TECHNOLOGIES.

SOLID EDGE DRAWING

ITEM	SIZE/TYPE/ LENGTH	QTY	LENGTH	DESCRIPTION	HOSE TYPE	WHERE IT GOES ON THE MACHINE
						REAR AXLE SUB-ASSEMBLY
1301	8HP35	1	35	1/2 HIGH PRESSURE	GH 793-8	FROM BOTTOM PORT ON TRANSMISSION PUMP TO TRANSMISSION INLET PORT
1302	4HP42.5	1	56	1/4 HIGH PRESSURE	GH 793-4	TOP BULKHEAD TO TOP BULKHEAD LEFT SIDE
1303	4HP42.5	1	56	1/4 HIGH PRESSURE	GH 793-4	BOTTOM BULKHEAD TO BOTTOM BULKHEAD LEFT SIDE
1304	4HP42.5	1	56	1/4 HIGH PRESSURE	GH 793-4	TOP BULKHEAD TO TOP BULKHEAD RIGHT SIDE
1305	4HP42.5	1	56	1/4 HIGH PRESSURE	GH 793-4	BOTTOM BULKHEAD TO BOTTOM BULKHEAD RIGHT SIDE
1306	4HP23	2	17.5	1/4 HIGH PRESSURE	GH 793-4	TOP BULKHEAD TO ROD END OF LOCKOUT CYLINDER
1307	4HP24	2	27	1/4 HIGH PRESSURE	GH 793-4	BOTTOM BULKHEAD TO PISTON END OF LOCKOUT CYLINDER
1308	8MP21	2	21	1/2 MEDIUM PRESSURE	FC 350A-8	FROM REAR FAIL-SAFE BRAKE CHAMBER TO FAIL-SAFE VALVE LEFT AND RIGHT
1309	6MP18	2	29	3/8 MEDIUM PRESSURE	FC350A-6	FROM REAR SERVICE BRAKE CHAMBER TO RELAY VALVE RIGHT SIDE
1310	--------	1	28	1 BLUE SUCTION	2661-16	FROM ELBOW ON BOTTOM OF TRANSMISSION TO SUCTION PORT OF PUMP
1311	4MP15	1	15	1/4 MEDIUM PRESSURE	FC 350A-4	FROM SERVICE BRAKE RELAY VALVE DELIVERY PORT TO FAIL-SAFE RELAY VALVE EXHAUST PORT
1312	6MP18	1	27	3/8 MEDIUM PRESSURE	FC350A-6	FROM REAR SERVICE BRAKE CHAMBER TO RELAY VALVE LEFT SIDE
						WORKHEAD SQUEEZE CYLINDER HOSES
1313	6HP13	1	13	3/8 HIGH PRESSURE	FC735-6	TOP FRONT OUTSIDE PORT OF LEFT SQUEEZE MANIFOLD TO PISTON END OF CYLINDER
1314	6HP13	1	13	3/8 HIGH PRESSURE	FC735-6	TOP REAR OUTSIDE PORT OF LEFT SQUEEZE MANIFOLD TO ROD END OF CYLINDER
1315	6HP13	1	13	3/8 HIGH PRESSURE	FC735-6	TOP FRONT OUTSIDE PORT OF RIGHT SQUEEZE MANIFOLD TO PISTON END OF CYLINDER
1316	6HP13	1	13	3/8 HIGH PRESSURE	FC735-6	TOP REAR OUTSIDE PORT OF RIGHT SQUEEZE MANIFOLD TO ROD END OF CYLINDER
1317	6HP17.5	1	17.5	3/8 HIGH PRESSURE	FC735-6	BOTTOM FRONT OUTSIDE PORT OF LEFT SQUEEZE MANIFOLD TO PISTON END ON CYLINDER
1318	6HP17.5	1	17.5	3/8 HIGH PRESSURE	FC735-6	BOTTOM REAR OUTSIDE PORT OF LEFT SQUEEZE MANIFOLD TO ROD END OF CYLINDER
1319	6HP17.5	1	17.5	3/8 HIGH PRESSURE	FC735-6	BOTTOM FRONT OUTSIDE PORT OF RIGHT SQUEEZE MANIFOLD TO PISTON END ON CYLINDER
1320	6HP17.5	1	17.5	3/8 HIGH PRESSURE	FC735-6	BOTTOM REAR OUTSIDE PORT OF RIGHT SQUEEZE MANIFOLD TO ROD END OF CYLINDER
1321	6HP22	1	22	3/8 HIGH PRESSURE	FC735-6	TOP FRONT INSIDE PORT TO PISTON END OF LEFT FRONT INSIDE SQUEEZE CYLINDER, RIGHT SIDE
1322	6HP22	1	22	3/8 HIGH PRESSURE	FC735-6	TOP FRONT INSIDE PORT TO PISTON END OF RIGHT FRONT INSIDE SQUEEZE CYLINDER, LEFT SIDE
1323	6HP26	1	26	3/8 HIGH PRESSURE	FC735-6	TOP REAR INSIDE PORT TO ROD END OF LEFT FRONT SQUEEZE CYLINDER, RIGHT SIDE
1324	6HP26	1	26	3/8 HIGH PRESSURE	FC735-6	TOP REAR INSIDE PORT TO ROD END OF RIGHT FRONT SQUEEZE CYLINDER, LEFT SIDE
1325	6HP34	1	34	3/8 HIGH PRESSURE	FC735-6	BOTTOM FRONT INSIDE PORT TO PISTON END OF RIGHT FRONT SQUEEZE CYLINDER, RIGHT SIDE
1326	6HP34	1	34	3/8 HIGH PRESSURE	FC735-6	BOTTOM FRONT INSIDE PORT TO PISTON END OF LEFT FRONT SQUEEZE CYLINDER, LEFT SIDE
1327	6HP37	1	37	3/8 HIGH PRESSURE	FC735-6	BOTTOM REAR INSIDE PORT TO ROD END OF RIGHT FRONT SQUEEZE CYLINDER, RIGHT SIDE
1328	6HP37	1	37	3/8 HIGH PRESSURE	FC735-6	BOTTOM REAR INSIDE PORT TO ROD END OF LEFT FRONT SQUEEZE CYLINDER, LEFT SIDE
1329						
1330						
1331						
1332						
1333						
1334						
1335						

IMPLIED TOLERANCES

ALL DIMENSIONS ARE IN INCHES - TOLERANCE UNLESS OTHERWISE SPECIFIED

NOMINAL SIZE RANGE		INCH PLUS OR MINUS		NOMINAL SIZE RANGE		METRIC PLUS OR MINUS	
OVER	TO	2 PLACE DECIMAL	3 PLACE DECIMAL	OVER	TO	1 PLACE DECIMAL	2 PLACE DECIMAL
0	6	.03	.005	0	150	.8	.13
6	24	.04	.008	150	600	1.0	.20
24	-	.06	.010	-	600	1.5	.25

UNLESS OTHERWISE SPECIFIED ALL MACHINED SURFACES WILL HAVE;
A SURFACE FINISH OF 125 MICROINCHES
ANGULAR TOLERANCE OF ± .50°
CONCENTRICITY WITHIN .010

THIRD ANGLE PROJECTION

UNLESS OTHERWISE SPECIFIED ALL WELDS SHOULD ADHERE TO THE LATEST HTT WELDING SPECIFICATION 101

CHANGE	R/L	REVISION	DATE
101704	A	NEW RELEASE	03-28-08

Description: HOSE KIT

Drawing Number: ----------

Machine Type: MK IV JUPITER

Model: 4016555.dft

Drawn: hwiggins

Date Drawn: 03-28-08

Weight: ----------

Scale: 1:4

APVD Desg: HW

APVD ChEng: JBR

Mat'l: ----------

HTT
Harsco Track Technologies
Harsco
Columbia, SC

Part Number: 4016555

Size: B

Sheet: 13 of 16

Plotted by hwiggins on 3/28/2008 4016555.dft

CONFIDENTIAL

© COPYRIGHT 2001 HARSCO TRACK TECHNOLOGIES. THIS DRAWING OR DOCUMENT IS THE PROPERTY OF HARSCO TRACK TECHNOLOGIES AND EMBODIES CONFIDENTIAL INFORMATION, TRADE SECRET INFORMATION, AND/OR KNOW-HOW THAT IS THE PROPERTY OF HARSCO TRACK TECHNOLOGIES. BY ACCEPTING THIS DRAWING OR DOCUMENT, THE RECIPIENT AGREES (1) NOT TO PROVIDE, OR OTHERWISE MAKE AVAILABLE, THE DRAWING OR DOCUMENT, OR ANY INFORMATION OR KNOW-HOW EMBODIED THEREIN, TO ANY THIRD PARTY AND (2) NOT TO REPRODUCE OR USE THE DRAWING OR DOCUMENT TO MANUFACTURE ANY APPARATUS OR DEVICE, WITHOUT THE PRIOR WRITTEN AUTHORIZATION OF HARSCO TRACK TECHNOLOGIES.

SOLID EDGE DRAWING

ITEM	SIZE/TYPE/ LENGTH	QTY	LENGTH	DESCRIPTION	HOSE TYPE	WHERE IT GOES ON THE MACHINE
				ENGINE SKID ASSEMBLY		
1401	4HP37	1	37	1/4 HIGH PRESSURE	GH 793-4	P-1 LOAD SENSING INSIDE FITTING TO RESTRICTOR AT PUMP CONTROL VALVE
1402	4HP37	1	37	1/4 HIGH PRESSURE	GH 793-4	P-2 LOAD SENSING INSIDE FITTING TO RESTRICTOR AT PUMP CONTROL VALVE
1403	4HP38	1	38	1/4 HIGH PRESSURE	GH 793-4	P-1 LOAD SENSING BOTTOM FITTING TO PUMP CONTROL VALVE
1404	4HP38	1	38	1/4 HIGH PRESSURE	GH 793-4	P-2 LOAD SENSING BOTTOM FITTING TO PUMP CONTROL VALVE
1405						
1406	12MP84	1	84	3/4 MEDIUM PRESSURE	FC 211-12	REMOTE OIL DRAIN
1407	6MP77	1	77	3/8 MEDIUM PRESSURE	FC 211-6	BOTTOM OF OIL COOLER MANIFOLD TO P-1 CASE DRAIN
1408	6MP77	1	77	3/8 MEDIUM PRESSURE	FC 211-6	BOTTOM OF OIL COOLER MANIFOLD TO P-2 CASE DRAIN
1409	4MP70	1	70	1/4 MEDIUM PRESSURE	FC 350A-4	GOVERNOR TO AIR DRYER UN-LOAD PORT
1410	4MP145	1	145	1/4 MEDIUM PRESSURE	FC 350A-4	GOVERNOR TO AIR TANK
1411	12T12	1	12	3/4 TEFLON	2807-12	DRYER TO COPPER TUBING
1412						
1413	12T88	1	88	3/4 TEFLON	2807-12	FROM AIR COMPRESSOR TO COPPER TUBING
1414	---------	2	19	2 1/2 BLUE SUCTION	2661-40	P-1, P-2
1415	---------	1	15	2 BLUE SUCTION	2661-32	P-3, P-4
1416	---------	1	15	2 BLUE SUCTION	2661-32	P-5, P-6
1417	---------	1	74	1 1/4 BLUE SUCTION	2661-20	FROM FAR R/H HYDRAULIC TANK SUCTION TUBE TO P-7, A/C PUMP INLET. (USE JIC SWIVEL HOSE ENDS ON BOTH ENDS)
1418	---------	1	36	1 1/4 BLUE SUCTION	2661-20	FROM FAR L/H HYD TANK SUCTION TUBE TO FAR RIGHT HAND SUCTION TUBE. (USE JIC SWIVEL HOSE ENDS ON BOTH ENDS)
1419						
1420						
1421						
1422						
1423						
1424						
1425						
1426						
1427						
1428						
1429						
1430						
1431						
1432						
1433						
1434						
1435						
1436						

IMPLIED TOLERANCES

ALL DIMENSIONS ARE IN INCHES - TOLERANCE UNLESS OTHERWISE SPECIFIED

NOMINAL SIZE RANGE		INCH PLUS OR MINUS		NOMINAL SIZE RANGE		METRIC PLUS OR MINUS	
OVER	TO	2 PLACE DECIMAL	3 PLACE DECIMAL	OVER	TO	1 PLACE DECIMAL	2 PLACE DECIMAL
0	6	.03	.005	0	150	.8	.13
6	24	.04	.008	150	600	1.0	.20
24	-	.06	.010	-	600	1.5	.25

UNLESS OTHERWISE SPECIFIED ALL MACHINED SURFACES WILL HAVE;
A SURFACE FINISH OF 125 MICROINCHES
ANGULAR TOLERANCE OF ± .50°
CONCENTRICITY WITHIN .010

THIRD ANGLE PROJECTION

UNLESS OTHERWISE SPECIFIED ALL WELDS SHOULD ADHERE TO THE LATEST HTT WELDING SPECIFICATION 101

CHANGE	R/L	REVISION	DATE
101704	A	NEW RELEASE	03-28-08

Description: HOSE KIT

Drawing Number: ----------

Machine Type: MK IV JUPITER

Model: 4016555.dft

Drawn: hwiggins

Date Drawn: 03-28-08

Weight: ----------

Scale: 1:4

APVD Desg: HW

APVD ChEng: JBR

Mat'l: ----------

HTT
Harsco Track Technologies
Harsco
Columbia, SC

Part Number: 4016555

Size: B

Sheet: 14 of 16

Plotted by hwiggins on 3/28/2008 4016555.dft

CONFIDENTIAL

© COPYRIGHT 2001 HARSCO TRACK TECHNOLOGIES. THIS DRAWING OR DOCUMENT IS THE PROPERTY OF HARSCO TRACK TECHNOLOGIES AND EMBODIES CONFIDENTIAL INFORMATION, TRADE SECRET INFORMATION, AND/OR KNOW-HOW THAT IS THE PROPERTY OF HARSCO TRACK TECHNOLOGIES. BY ACCEPTING THIS DRAWING OR DOCUMENT, THE RECIPIENT AGREES (1) NOT TO PROVIDE, OR OTHERWISE MAKE AVAILABLE, THE DRAWING OR DOCUMENT, OR ANY INFORMATION OR KNOW-HOW EMBODIED THEREIN, TO ANY THIRD PARTY AND (2) NOT TO REPRODUCE OR USE THE DRAWING OR DOCUMENT TO MANUFACTURE ANY APPARATUS OR DEVICE, WITHOUT THE PRIOR WRITTEN AUTHORIZATION OF HARSCO TRACK TECHNOLOGIES.

SOLID EDGE DRAWING

ITEM	SIZE/TYPE/ LENGTH	QTY	LENGTH	DESCRIPTION	HOSE TYPE	WHERE IT GOES ON THE MACHINE
						HYDRAULIC AIR CONDITIONER
1500	8HP52	1	52	1/2 HIGH PRESSURE	GH 793-8	FROM A/C PUMP TO RELIEF VALVE
1501	8HP50	1	50	1/2 HIGH PRESSURE	GH 793-8	FROM A/C PRESSURE HARD LINE TO INSIDE HARD LINE AT CAB
1502	8HP65	1	65	1/2 HIGH PRESSURE	GH 793-8	FROM BOTTOM HARD LINE NEAR A/C TO OUTSIDE PORT ON A/C UNIT **HOSE ENDS: JIC SWIVEL X SHORT 90 JIC SW**
1503	4HP14.5	1	14 1/2	1/4 HIGH PRESSURE	GH 793-4	FROM BOTTOM PORT IN VENT VALVE TO 90 FITTING IN RELIEF VALVE
1504	4HP11	1	11	1/4 HIGH PRESSURE	GH 793-4	FROM MIDDLE PORT IN VENT VALVE TO PILOT PORT IN RELIEF VALVE
1505	8MP50	1	50	1/2 MEDIUM PRESSURE	FC 211-8	FROM A/C RETURN HARD LINE TO OUTSIDE HARD LINE AT CAB
1506	8MP78	1	78	1/2 MEDIUM PRESSURE	FC 211-8	FROM A/C RETURN HARD LINE TO INSDIE PORT ON RIGHT RETURN FILTER
1507	8MP65	1	65	1/2 HIGH PRESSURE	GH 793-8	FROM TOP HARD LINE NEAR A/C TO INSIDE PORT ON A/C UNIT **HOSE ENDS: JIC SWIVEL X SHORT 90 JIC SW**
1508	6MP96	1	96	3/8 MEDIUM PRESSURE	FC 211-6	FROM CASE DRAIN BULKHEAD ON A/C TO BULKHEAD IN REAR TRACTION VALVE MOUNTING PLATE
1509	8MP48	1	48	1/2 MEDIUM PRESSURE	FC 211-8	FROM RELIEF VALVE TO CENTER RETURN HARDLINE ON ENGINE SIDE OF HYDRAULIC TANK
1510	8HP102	1	102	1/2 HIGH PRESSURE	GH 793-8	FROM FLOW CONTROL OUTLET TO A/C PRESSURE HARDLINE (TOP HARDLINE)
1511						
1512						
1513						
1514						
1515						
1516						
1517						
1518						
1519						
1520						
1521						
1522						
1523						
1524						
1525						
1526						
1527						
1528						
1529						
1530						
1531						
1532						
1533						
1534						
1535						
1536						

IMPLIED TOLERANCES

ALL DIMENSIONS ARE IN INCHES - TOLERANCE UNLESS OTHERWISE SPECIFIED

NOMINAL SIZE RANGE		INCH PLUS OR MINUS		NOMINAL SIZE RANGE		METRIC PLUS OR MINUS	
OVER	TO	2 PLACE DECIMAL	3 PLACE DECIMAL	OVER	TO	1 PLACE DECIMAL	2 PLACE DECIMAL
0	6	.03	.005	0	150	.8	.13
6	24	.04	.008	150	600	1.0	.20
24	-	.06	.010	-	600	1.5	.25

UNLESS OTHERWISE SPECIFIED ALL MACHINED SURFACES WILL HAVE;
A SURFACE FINISH OF 125 MICROINCHES
ANGULAR TOLERANCE OF ± .50°
CONCENTRICITY WITHIN .010

THIRD ANGLE PROJECTION

UNLESS OTHERWISE SPECIFIED ALL WELDS SHOULD ADHERE TO THE LATEST HTT WELDING SPECIFICATION 101

CHANGE	R/L	REVISION	DATE
101704	A	NEW RELEASE	03-28-08

Description: HOSE KIT

Drawing Number: ----------

Machine Type: MK IV JUPITER

Model: 4016555.dft

Drawn: hwiggins

Date Drawn: 03-28-08

Weight: ----------

Scale: 1:4

APVD Desg: HW

APVD ChEng: JBR

Mat'l: ----------

HTT
Harsco Track Technologies
Harsco
Columbia, SC

Part Number: 4016555

Size: B

Sheet: 15 of 16

Plotted by hwiggins on 3/28/2008 4016555.dft

CONFIDENTIAL

© COPYRIGHT 2001 HARSCO TRACK TECHNOLOGIES. THIS DRAWING OR DOCUMENT IS THE PROPERTY OF HARSCO TRACK TECHNOLOGIES AND EMBODIES CONFIDENTIAL INFORMATION, TRADE SECRET INFORMATION, AND/OR KNOW-HOW THAT IS THE PROPERTY OF HARSCO TRACK TECHNOLOGIES. BY ACCEPTING THIS DRAWING OR DOCUMENT, THE RECIPIENT AGREES (1) NOT TO PROVIDE, OR OTHERWISE MAKE AVAILABLE, THE DRAWING OR DOCUMENT, OR ANY INFORMATION OR KNOW-HOW EMBODIED THEREIN, TO ANY THIRD PARTY AND (2) NOT TO REPRODUCE OR USE THE DRAWING OR DOCUMENT TO MANUFACTURE ANY APPARATUS OR DEVICE, WITHOUT THE PRIOR WRITTEN AUTHORIZATION OF HARSCO TRACK TECHNOLOGIES.

SOLID EDGE DRAWING

REVISIONS:

CHANGE	APPROVAL AND DATE	RELEASE	DESCRIPTION
13100.2	JBR, AML 12-01-04	A	NEW RELEASE
13105.2	JBR, AML 3-15-05	B	ITEM 313 WAS 44". ITEM 314 WAS 25". ADDED ITEM 415, 617, 820, 1014, 1015, 1214, & 1311. ITEM 1101 WAS 22". ITEM 1109 WAS 6 1/2". ITEMS 1211, 1212, & 1308 WERE 1/4" HOSE. DELETED ITEM 1108 WAS 4MP2.25 FC350A-4.
100584	PJG/JOC 06-09-06	C	SEE INDIVIDUAL SHEETS
100889	CJW/JBR 12-07-06	D	SEE INDIVIDUAL SHEETS

IMPLIED TOLERANCES

ALL DIMENSIONS ARE IN INCHES - TOLERANCE UNLESS OTHERWISE SPECIFIED

NOMINAL SIZE RANGE		INCH PLUS OR MINUS		NOMINAL SIZE RANGE		METRIC PLUS OR MINUS	
OVER	TO	2 PLACE DECIMAL	3 PLACE DECIMAL	OVER	TO	1 PLACE DECIMAL	2 PLACE DECIMAL
0	6	.03	.005	0	150	.8	.13
6	24	.04	.008	150	600	1.0	.20
24	-	.06	.010	-	600	1.5	.25

UNLESS OTHERWISE SPECIFIED ALL MACHINED SURFACES WILL HAVE;
A SURFACE FINISH OF 125 MICROINCHES
ANGULAR TOLERANCE OF ± .50°
CONCENTRICITY WITHIN .010

THIRD ANGLE PROJECTION

UNLESS OTHERWISE SPECIFIED ALL WELDS SHOULD ADHERE TO THE LATEST HTT WELDING SPECIFICATION 101

CHANGE	R/L	REVISION	DATE
101704	A	NEW RELEASE	03-28-08

Description: HOSE KIT

Drawing Number: ----------

Machine Type: MK IV JUPITER

Model: 4016555.dft

Drawn: hwiggins

Date Drawn: 03-28-08

Weight: ----------

Scale: 1:4

APVD Desg: HW

APVD ChEng: JBR

Mat'l: ----------

HTT
Harsco Track Technologies
Harsco
Columbia, SC

Part Number: 4016555

Size: B

Sheet: 16 of 16

Plotted by hwiggins on 3/28/2008 4016555.dft

CONFIDENTIAL

© COPYRIGHT 2001 HARSCO TRACK TECHNOLOGIES. THIS DRAWING OR DOCUMENT IS THE PROPERTY OF HARSCO TRACK TECHNOLOGIES AND EMBODIES CONFIDENTIAL INFORMATION, TRADE SECRET INFORMATION, AND/OR KNOW-HOW THAT IS THE PROPERTY OF HARSCO TRACK TECHNOLOGIES. BY ACCEPTING THIS DRAWING OR DOCUMENT, THE RECIPIENT AGREES (1) NOT TO PROVIDE, OR OTHERWISE MAKE AVAILABLE, THE DRAWING OR DOCUMENT, OR ANY INFORMATION OR KNOW-HOW EMBODIED THEREIN, TO ANY THIRD PARTY AND (2) NOT TO REPRODUCE OR USE THE DRAWING OR DOCUMENT TO MANUFACTURE ANY APPARATUS OR DEVICE, WITHOUT THE PRIOR WRITTEN AUTHORIZATION OF HARSCO TRACK TECHNOLOGIES.

SOLID EDGE DRAWING

MACHINE: MARK IV STANDARD
MODEL: JUPITER, TIER III ENGINE
2007

HOSE ASSEMBLIES ARE TO BE PLUGGED WITH THREAD PROTECTORS AND INDIVIDUALLY MARKED WITH UNIQUE ASSEMBLY IDENTIFIER. ALL HOSES WITH STRAIGHT 37 DEGREE JIC HOSE ENDS UNLESS OTHERWISE SPECIFIED. LENGTH IS CUT DIMENSION IN INCHES.

ITEM	SIZE/TYPE/ LENGTH	QTY	LENGTH	DESCRIPTION	HOSE TYPE	WHERE IT GOES ON THE MACHINE
PROJECTOR BUGGY						
101	4HP159	1	159	1/4 HIGH PRESSURE	GH 793-4	TEE ON P-2 SUPPLY LINE TO PRESSURE PORT BUGGY LIFT VALVE
102	6MP126	1	126	3/8 MEDIUM PRESSURE	GH 663-6	TANK PORT ON BUGGY LIFT VALVE TO CENTER CORNER LEFT CENTER FITTING TO HYDRAULIC TANK
103	4HP78.5	1	78 1/2	1/4 HIGH PRESSURE	GH 793-4	C-1 TO ROD END OF BUGGY LIFT CYLINDER
104	4HP84	1	84	1/4 HIGH PRESSURE	GH 793-4	C-2 TO PISTON END OF BUGGY LIFT CYLINDER
105	4HP18	1	18	1/4 HIGH PRESSURE	GH 793-4	CHECK VALVE AT C-2 TO TEE IN TANK PORT
FRONT LOCKOUTS						
106	6HP55	1	55	3/8 HIGH PRESSURE	GH793-6	SW-SW-TEE ON FRONT TRACTION VALVE TO PISTON END OF FRONT LOCKOUT LEFT SIDE
107	6HP83	1	83	3/8 HIGH PRESSURE	GH793-7	SW-SW-CENTER COVER ON HYD TANK TO ROD END OF FRONT LOCKOUT CYL LEFT SIDE
108	6HP95	1	95	3/8 HIGH PRESSURE	GH793-8	SW-SW-TEE ON FRONT TRACTION VALVE TO PISTON END OF FRONT LOCKOUT RIGHT SIDE
109	6HP84	1	84	3/8 HIGH PRESSURE	GH793-9	SW-SW-CENTER COVER ON HYD TANK TO ROD END OF FRONT LOCKOUT CYL RIGHT SIDE
110						
111						
112						
113						
114						
115						
116						
117						
118						
119						
120						

IMPLIED TOLERANCES

ALL DIMENSIONS ARE IN INCHES - TOLERANCE UNLESS OTHERWISE SPECIFIED

NOMINAL SIZE RANGE OVER	TO	INCH PLUS OR MINUS 2 PLACE DECIMAL	3 PLACE DECIMAL	NOMINAL SIZE RANGE OVER	TO	METRIC PLUS OR MINUS 1 PLACE DECIMAL	2 PLACE DECIMAL
0	6	.03	.005	0	150	.8	.13
6	24	.04	.008	150	600	1.0	.20
24	-	.06	.010	-	600	1.5	.25

UNLESS OTHERWISE SPECIFIED ALL MACHINED SURFACES WILL HAVE;
A SURFACE FINISH OF 125 MICROINCHES
ANGULAR TOLERANCE OF ± .50°
CONCENTRICITY WITHIN .010

THIRD ANGLE PROJECTION

UNLESS OTHERWISE SPECIFIED ALL WELDS SHOULD ADHERE TO THE LATEST HTT WELDING SPECIFICATION 101

CHANGE	R/L	REVISION		DATE
EC501889	A	NEW RELEASE	GMM	7-1-11
EC502954	B	ADDED IT-1110	BCB	2/15/12
EC503288	C	UPDATED FC211 TO GH663 & FC136 TO GH 493 HOSES	GMM	3/23/12

Description: HOSE KIT

Drawing Number: ----------
Machine Type: MARK IV
Model: 5009363.dft
Drawn: kadams
Date Drawn: 7/1/11
Weight: ----------
Scale: -----
APVD Desg: BPA
APVD ChEng: BPA
Mat'l: ----------

HTT
Harsco Track Technologies
Harsco
Columbia, SC

Part Number: 5009363
Size: B
Sheet: 1 of 15

Plotted by gmancini on 3/23/2012 5009363.dft

CONFIDENTIAL

© COPYRIGHT 2001 HARSCO TRACK TECHNOLOGIES. THIS DRAWING OR DOCUMENT IS THE PROPERTY OF HARSCO TRACK TECHNOLOGIES AND EMBODIES CONFIDENTIAL INFORMATION, TRADE SECRET INFORMATION, AND/OR KNOW-HOW THAT IS THE PROPERTY OF HARSCO TRACK TECHNOLOGIES. BY ACCEPTING THIS DRAWING OR DOCUMENT, THE RECIPIENT AGREES (1) NOT TO PROVIDE, OR OTHERWISE MAKE AVAILABLE, THE DRAWING OR DOCUMENT, OR ANY INFORMATION OR KNOW-HOW EMBODIED THEREIN, TO ANY THIRD PARTY AND (2) NOT TO REPRODUCE OR USE THE DRAWING OR DOCUMENT TO MANUFACTURE ANY APPARATUS OR DEVICE, WITHOUT THE PRIOR WRITTEN AUTHORIZATION OF HARSCO TRACK TECHNOLOGIES.

SOLID EDGE DRAWING

ITEM	SIZE/TYPE/ LENGTH	QTY	LENGTH	DESCRIPTION	HOSE TYPE	WHERE IT GOES ON THE MACHINE
FRONT TRACTION						
201	20SHP58	1	58	1-1/4 SUPER HIGH PRESS	GH 493-20	B PORT ON TRACTION VALVE TO TOP (B) PORT OF MOTOR
202	20SHP72	1	72	1-1/4 SUPER HIGH PRESS	GH 493-20	A PORT ON TRACTION VALVE TO BOTTOM (A) PORT OF MOTOR
203	20SHP92.5	1	92.5	1-1/4 SUPER HIGH PRESS	GH 493-20	P-1 HARD LINE UNDER ENGINE TO TRACTION VALVE P-PORT
204	20MP49	1	49	1-1/4 MEDIUM PRESSURE	GH 663-20	TANK PORT ON TRACTION VALVE TO RELIEF ON TOP OF TANK
205	8HP21	1	21	1/2 HIGH PRESSURE	GH 793-8	FROM OUTLET PORT ON TRACTION PUMP TO INLET PORT ON TRANSMISSION
206	4HP18	1	18	1/4 HIGH PRESSURE	GH 793-4	FROM CHECK TO CHECK VALVE AT TRACTION VALVE
207	4HP55	1	55	1/4 HIGH PRESSURE	GH 793-4	FROM TEE ON TRACTION RELIEF VALVE TO 3/8 HARD LINE LEFT SIDE
208	6MP19	1	19	3/8 MEDIUM PRESSURE	GH 663-6	TRACTION VALVE PILOT DRAIN TO 90 DEGREE AT LEFT OIL FILTER
209						
210						
211						
212						
213						
214						
215						
216						
217						
218						
219						
220						

IMPLIED TOLERANCES

ALL DIMENSIONS ARE IN INCHES - TOLERANCE UNLESS OTHERWISE SPECIFIED

NOMINAL SIZE RANGE		INCH PLUS OR MINUS		NOMINAL SIZE RANGE		METRIC PLUS OR MINUS	
OVER	TO	2 PLACE DECIMAL	3 PLACE DECIMAL	OVER	TO	1 PLACE DECIMAL	2 PLACE DECIMAL
0	6	.03	.005	0	150	.8	.13
6	24	.04	.008	150	600	1.0	.20
24	-	.06	.010	-	600	1.5	.25

UNLESS OTHERWISE SPECIFIED ALL MACHINED SURFACES WILL HAVE;
A SURFACE FINISH OF 125 MICROINCHES
ANGULAR TOLERANCE OF ± .50°
CONCENTRICITY WITHIN .010

THIRD ANGLE PROJECTION

UNLESS OTHERWISE SPECIFIED ALL WELDS SHOULD ADHERE TO THE LATEST HTT WELDING SPECIFICATION 101

CHANGE	R/L	REVISION		DATE
EC501889	A	NEW RELEASE	GMM	7-1-11
EC502954	B	ADDED IT-1110	BCB	2/15/12
EC503288	C	UPDATED FC211 TO GH663 & FC136 TO GH 493 HOSES	GMM	3/23/12

Description: HOSE KIT

Drawing Number: ----------

Machine Type: MARK IV

Model: 5009363.dft

Drawn: kadams

Date Drawn: 7/1/11

Weight: ----------

Scale: -----

APVD Desg: BPA

APVD ChEng: BPA

Mat'l: ----------

HTT
Harsco Track Technologies
Harsco
Columbia, SC

Part Number: 5009363

Size: B

Sheet: 2 of 15

Plotted by gmancini on 3/23/2012 5009363.dft

CONFIDENTIAL

© COPYRIGHT 2001 HARSCO TRACK TECHNOLOGIES. THIS DRAWING OR DOCUMENT IS THE PROPERTY OF HARSCO TRACK TECHNOLOGIES AND EMBODIES CONFIDENTIAL INFORMATION, TRADE SECRET INFORMATION, AND/OR KNOW-HOW THAT IS THE PROPERTY OF HARSCO TRACK TECHNOLOGIES. BY ACCEPTING THIS DRAWING OR DOCUMENT, THE RECIPIENT AGREES (1) NOT TO PROVIDE, OR OTHERWISE MAKE AVAILABLE, THE DRAWING OR DOCUMENT, OR ANY INFORMATION OR KNOW-HOW EMBODIED THEREIN, TO ANY THIRD PARTY AND (2) NOT TO REPRODUCE OR USE THE DRAWING OR DOCUMENT TO MANUFACTURE ANY APPARATUS OR DEVICE, WITHOUT THE PRIOR WRITTEN AUTHORIZATION OF HARSCO TRACK TECHNOLOGIES.

SOLID EDGE DRAWING

ITEM	SIZE/TYPE/ LENGTH	QTY	LENGTH	DESCRIPTION	HOSE TYPE	WHERE IT GOES ON THE MACHINE
ENGINE AND HYDRAULIC TANK						
301	16HP45	1	45	1 HIGH PRESSURE	GH 493-16	P-1 PUMP TO HARD LINE 4000PSI HOSE LOST
302	16HP45	1	45	1 HIGH PRESSURE	GH 493-16	P-2 PUMP TO HARD LINE 4000PSI
303	12HP30	1	30	3/4 HIGH PRESSURE	GH 793-12	P-3 PUMP TO HARD LINE
304	12HP36.5	1	36 1/2	3/4 HIGH PRESSURE	GH 793-12	P-4 PUMP TO HARD LINE
305	12HP30	1	30	3/4 HIGH PRESSURE	GH 793-12	P-5 PUMP TO HARD LINE
306	12HP36.5	1	36 1/2	3/4 HIGH PRESSURE	GH 793-12	P-6 PUMP TO HARD LINE
307	20MP65	1	65	1-1/4 MEDIUM PRESSURE	GH 663-20	TOP 1 1/4 HARD LINE LEFT SIDE TO RELIEF VALVE
308	20MP56	1	56	1-1/4 MEDIUM PRESSURE	GH 663-20	BOTTOM LEFT SIDE HARD LINE TO 1 1/4 HARD LINE TO FILTER ON TOP OF TANK
309	20MP59	1	59	1-1/4 MEDIUM PRESSURE	GH 663-20	RIGHT SIDE HARD LINE TO TEE ON FILTER
310	20MP28	1	28	1-1/4 MEDIUM PRESSURE	GH 663-20	TEE ON LEFT FILTER TO TEE ON RIGHT FILTER
311	8MP22	1	22	1/2 MEDIUM PRESSURE	GH 663-8	LEFT SIDE HARD LINE TO CENTER COVER LEFT REAR FITTING -REF
312	8MP26	1	26	1/2 MEDIUM PRESSURE	GH 663-8	REAR TRACTION MOTOR CASE DRAIN TO RIGHT CENTER REAR FITTING -REF
313	8MP27	1	27	1/2 MEDIUM PRESSURE	GH 663-8	RIGHT SIDE BOTTOM 1/2 HARD LINE TO RIGHT SENTER INSIDE FITTING -REF
314	12MP33	1	33	3/4 MEDIUM PRESSURE	GH 663-12	P-1 CASE DRAIN TO HARD LINE ON ENGINE SIDE OF HYDRAULIC TANK
315	12MP33	1	33	3/4 MEDIUM PRESSURE	GH 663-12	P-2 CASE DRAIN TO HARD LINE ON ENGINE SIDE OF HYDRAULIC TANK
316	12MP35	1	35	3/4 MEDIUM PRESSURE	GH 663-12	HARD LINE RIGHT SIDE TO RIGHT COVER ON HYD TANK
317	8MP28		28	1/2 MEDIUM PRESSURE	GH 663-8	LEFT SIDE HARDLINE TO OUTSIDE COVER FRONT FITTING
318						
319						
320						

IMPLIED TOLERANCES

ALL DIMENSIONS ARE IN INCHES - TOLERANCE UNLESS OTHERWISE SPECIFIED

NOMINAL SIZE RANGE		INCH PLUS OR MINUS		NOMINAL SIZE RANGE		METRIC PLUS OR MINUS	
OVER	TO	2 PLACE DECIMAL	3 PLACE DECIMAL	OVER	TO	1 PLACE DECIMAL	2 PLACE DECIMAL
0	6	.03	.005	0	150	.8	.13
6	24	.04	.008	150	600	1.0	.20
24	-	.06	.010	-	600	1.5	.25

UNLESS OTHERWISE SPECIFIED ALL MACHINED SURFACES WILL HAVE;
A SURFACE FINISH OF 125 MICROINCHES
ANGULAR TOLERANCE OF ± .50°
CONCENTRICITY WITHIN .010

THIRD ANGLE PROJECTION

UNLESS OTHERWISE SPECIFIED ALL WELDS SHOULD ADHERE TO THE LATEST HTT WELDING SPECIFICATION 101

CHANGE	R/L	REVISION		DATE
EC501889	A	NEW RELEASE	GMM	7-1-11
EC502954	B	ADDED IT-1110	BCB	2/15/12
EC503288	C	UPDATED FC211 TO GH663 & FC136 TO GH 493 HOSES	GMM	3/23/12

Description: HOSE KIT

Drawing Number: ----------

Machine Type: MARK IV

Model: 5009363.dft

Drawn: kadams

Date Drawn: 7/1/11

Weight: ----------

Scale: -----

APVD Desg: BPA

APVD ChEng: BPA

Mat'l: ----------

HTT
Harsco Track Technologies
Harsco
Columbia, SC

Part Number: 5009363

Size: B

Sheet: 3 of 15

Plotted by gmancini on 3/23/2012 5009363.dft

CONFIDENTIAL

© COPYRIGHT 2001 HARSCO TRACK TECHNOLOGIES. THIS DRAWING OR DOCUMENT IS THE PROPERTY OF HARSCO TRACK TECHNOLOGIES AND EMBODIES CONFIDENTIAL INFORMATION, TRADE SECRET INFORMATION, AND/OR KNOW-HOW THAT IS THE PROPERTY OF HARSCO TRACK TECHNOLOGIES. BY ACCEPTING THIS DRAWING OR DOCUMENT, THE RECIPIENT AGREES (1) NOT TO PROVIDE, OR OTHERWISE MAKE AVAILABLE, THE DRAWING OR DOCUMENT, OR ANY INFORMATION OR KNOW-HOW EMBODIED THEREIN, TO ANY THIRD PARTY AND (2) NOT TO REPRODUCE OR USE THE DRAWING OR DOCUMENT TO MANUFACTURE ANY APPARATUS OR DEVICE, WITHOUT THE PRIOR WRITTEN AUTHORIZATION OF HARSCO TRACK TECHNOLOGIES.

SOLID EDGE DRAWING

ITEM	SIZE/TYPE/ LENGTH	QTY	LENGTH	DESCRIPTION	HOSE TYPE	WHERE IT GOES ON THE MACHINE
				COMBO CLAMP		
401	16HP56	2	56	1 HIGH PRESSURE	FC 735-16	ROD END OF JACK CYLINDER TO JACK VALVE MANIFOLD B PORT (JACK UP)
402	16HP46	2	46	1 HIGH PRESSURE	FC 735-16	PISTON END OF JACK CYLINDER TO JACK VALVE MANIFOLD A PORT (JACK DOWN)
403	12HP76	2	76	3/4 HIGH PRESSURE	FC 735-12	ROD END OF HOOK CYLINDER TO CLAMP VALVE MANIFOLD B PORT (HOOK IN)
404	12HP76	2	76	3/4 HIGH PRESSURE	FC 735-12	PISTON END OF HOOK CYLINDER TO CLAMP VALVE MANIFOLD A PORT (HOOK OUT)
405	12HP77	1	77	3/4 HIGH PRESSURE	FC 735-12	TEE ON PISTON END OF RIGHT LINER CYLINDER TO LINER MANIFOLD A PORT (LINE RIGHT)
406	12HP77	1	77	3/4 HIGH PRESSURE	FC 735-12	TEE ON PISTON END OF LEFT LINER CYLINDER TO LINER MANIFOLD B PORT (LINE LEFT)
407	12HP36	2	36	3/4 HIGH PRESSURE	FC 735-12	TEE ON PISTON END OF LINER CYLINDER TO ROD END OF OPPOSITE SIDE LINER CYLINDER
408	8HP99	1	99	1/2 HIGH PRESSURE	FC 735-8	PISTON PORT ON BIAS CYLINDER TO CLAMP BIAS VALVE MANIFOLD B PORT (BIAS ON OR EXTEND)
409	8HP99	1	99	1/2 HIGH PRESSURE	FC 735-8	ROD PORT ON BIAS CYLINDER TO CLAMP BIAS VALVE MANIFOLD A PORT (BIAS OFF OR RETRACT)
410	6HP105	1	105	3/8 HIGH PRESSURE	FC 735-6	PILOT DRAIN PORT ON JACK VALVE MANIFOLD TO HARDLINE
411	4HP82	1	82	1/4 HIGH PRESSURE	FC 735-4	PISTON END OF RIGHT SLEW CYLINDER TO RIGHT SLEW VALVE MANIFOLD A PORT (SLEW RIGHT SIDE BACK)
412	4HP91	1	91	1/4 HIGH PRESSURE	FC 735-4	ROD END OR RIGHT SLEW CYLINDER TO RIGHT SLEW VALVE MANIFOLD B PORT (SLEW RIGHT SIDE FORWARD)
413	4HP91	1	91	1/4 HIGH PRESSURE	FC 735-4	ROD END OR LEFT SLEW CYLINDER TO LEFT SLEW VALVE MANIFOLD B PORT (SLEW LEFT SIDE FORWARD)
414	4HP82	1	82	1/4 HIGH PRESSURE	FC 735-4	PISTON END OF LEFT SLEW CYLINDER TO LEFT SLEW VALVE MANIFOLD A PORT (SLEW LEFT SIDE BACK)
415	8MP26	1	26	1/2 MEDIUM PRESSURE	GH 663-8	WARM UP VALVE TO RH LINER & CLAMP VALVE ASSY MANIFOLD TANK PORT
416						
417						
418						
419						
420						

IMPLIED TOLERANCES

ALL DIMENSIONS ARE IN INCHES - TOLERANCE UNLESS OTHERWISE SPECIFIED

NOMINAL SIZE RANGE		INCH PLUS OR MINUS		NOMINAL SIZE RANGE		METRIC PLUS OR MINUS	
OVER	TO	2 PLACE DECIMAL	3 PLACE DECIMAL	OVER	TO	1 PLACE DECIMAL	2 PLACE DECIMAL
0	6	.03	.005	0	150	.8	.13
6	24	.04	.008	150	600	1.0	.20
24	-	.06	.010	-	600	1.5	.25

UNLESS OTHERWISE SPECIFIED ALL MACHINED SURFACES WILL HAVE;
A SURFACE FINISH OF 125 MICROINCHES
ANGULAR TOLERANCE OF ± .50°
CONCENTRICITY WITHIN .010

THIRD ANGLE PROJECTION

UNLESS OTHERWISE SPECIFIED ALL WELDS SHOULD ADHERE TO THE LATEST HTT WELDING SPECIFICATION 101

CHANGE	R/L	REVISION		DATE
EC501889	A	NEW RELEASE	GMM	7-1-11
EC502954	B	ADDED IT-1110	BCB	2/15/12
EC503288	C	UPDATED FC211 TO GH663 & FC136 TO GH 493 HOSES	GMM	3/23/12

Description: HOSE KIT

Drawing Number: ----------

Machine Type: MARK IV

Model: 5009363.dft

Drawn: kadams

Date Drawn: 7/1/11

Weight: ----------

Scale: -----

APVD Desg: BPA

APVD ChEng: BPA

Mat'l: ----------

HTT
Harsco Track Technologies
Harsco
Columbia, SC

Part Number: 5009363

Size: B

Sheet: 4 of 15

Plotted by gmancini on 3/23/2012 5009363.dft

CONFIDENTIAL

© COPYRIGHT 2001 HARSCO TRACK TECHNOLOGIES. THIS DRAWING OR DOCUMENT IS THE PROPERTY OF HARSCO TRACK TECHNOLOGIES AND EMBODIES CONFIDENTIAL INFORMATION, TRADE SECRET INFORMATION, AND/OR KNOW-HOW THAT IS THE PROPERTY OF HARSCO TRACK TECHNOLOGIES. BY ACCEPTING THIS DRAWING OR DOCUMENT, THE RECIPIENT AGREES (1) NOT TO PROVIDE, OR OTHERWISE MAKE AVAILABLE, THE DRAWING OR DOCUMENT, OR ANY INFORMATION OR KNOW-HOW EMBODIED THEREIN, TO ANY THIRD PARTY AND (2) NOT TO REPRODUCE OR USE THE DRAWING OR DOCUMENT TO MANUFACTURE ANY APPARATUS OR DEVICE, WITHOUT THE PRIOR WRITTEN AUTHORIZATION OF HARSCO TRACK TECHNOLOGIES.

SOLID EDGE DRAWING

ITEM	SIZE/TYPE/ LENGTH	QTY	LENGTH	DESCRIPTION	HOSE TYPE	WHERE IT GOES ON THE MACHINE
WORKHEAD VALVE AREA						
501	12HP90	8	90	3/4 HIGH PRESSURE	FC735-12	JUNCTION BLOCK TO VIBRATORS LEFT AND RIGHT
502	12HP41	1	41	3/4 HIGH PRESSURE	GH793-12	FROM RIGHT OUTSIDE TO LEFT CHECK VALVE OF RIGHT RELIEF
503	12HP47	1	47	3/4 HIGH PRESSURE	GH793-12	FROM RIGHT MIDDLE TEE TO RIGHT CHECK VALVE OF RIGHT RELIEF
504	12HP28	1	31	3/4 HIGH PRESSURE	GH793-12	FROM LEFT OUTSIDE TEE TO LEFT CHECK VALVE OF LEFT RELIEF
505	12HP32	1	32	3/4 HIGH PRESSURE	GH793-12	P1-P2 PRESSURE PIPE TO CHECK VALVE ON LINER MANIFOLD
506	12HP32	1	32	3/4 HIGH PRESSURE	GH793-12	P1-P2 PRESSURE PIPE TO CHECK VALVE ON BIAS MANIFOLD
507	12HP36	1	39	3/4 HIGH PRESSURE	GH793-12	FROM LEFT MIDDLE TEE TO RIGHT CHECK VALVE OF LEFT RELIEF
508	8HP92.5	4	92.5	1/2 HIGH PRESSURE	FC735-8	JUNCTION BLOCK TO CASE DRAINS LEFT AND RIGHT
509	16MP32.5	1	32.5	1 MEDIUM PRESSURE	GH 663-16	RIGHT RETURN HARD LINE TO RETURN PORT ON VIBRATOR RELIEF VALVE
510	16MP24.5	1	24.5	1 MEDIUM PRESSURE	GH 663-16	LEFT RETURN HARD LINE TO RETURN PORT ON VIBRATOR RELIEF VALVE
511						
512						
513						
514						
515						
516						
517						
518						
519						
520						

IMPLIED TOLERANCES

ALL DIMENSIONS ARE IN INCHES - TOLERANCE UNLESS OTHERWISE SPECIFIED

NOMINAL SIZE RANGE		INCH PLUS OR MINUS		NOMINAL SIZE RANGE		METRIC PLUS OR MINUS	
OVER	TO	2 PLACE DECIMAL	3 PLACE DECIMAL	OVER	TO	1 PLACE DECIMAL	2 PLACE DECIMAL
0	6	.03	.005	0	150	.8	.13
6	24	.04	.008	150	600	1.0	.20
24	-	.06	.010	-	600	1.5	.25

UNLESS OTHERWISE SPECIFIED ALL MACHINED SURFACES WILL HAVE;
A SURFACE FINISH OF 125 MICROINCHES
ANGULAR TOLERANCE OF ± .50°
CONCENTRICITY WITHIN .010

THIRD ANGLE PROJECTION

UNLESS OTHERWISE SPECIFIED ALL WELDS SHOULD ADHERE TO THE LATEST HTT WELDING SPECIFICATION 101

CHANGE	R/L	REVISION		DATE
EC501889	A	NEW RELEASE	GMM	7-1-11
EC502954	B	ADDED IT-1110	BCB	2/15/12
EC503288	C	UPDATED FC211 TO GH663 & FC136 TO GH 493 HOSES	GMM	3/23/12

Description: HOSE KIT

Drawing Number: ----------

Machine Type: MARK IV

Model: 5009363.dft

Drawn: kadams

Date Drawn: 7/1/11

Weight: ----------

Scale: -----

APVD Desg: BPA

APVD ChEng: BPA

Mat'l: ----------

HTT
Harsco Track Technologies
Harsco
Columbia, SC

Part Number: 5009363

Size: B

Sheet: 5 of 15

Plotted by gmancini on 3/23/2012 5009363.dft

CONFIDENTIAL

© COPYRIGHT 2001 HARSCO TRACK TECHNOLOGIES. THIS DRAWING OR DOCUMENT IS THE PROPERTY OF HARSCO TRACK TECHNOLOGIES AND EMBODIES CONFIDENTIAL INFORMATION, TRADE SECRET INFORMATION, AND/OR KNOW-HOW THAT IS THE PROPERTY OF HARSCO TRACK TECHNOLOGIES. BY ACCEPTING THIS DRAWING OR DOCUMENT, THE RECIPIENT AGREES (1) NOT TO PROVIDE, OR OTHERWISE MAKE AVAILABLE, THE DRAWING OR DOCUMENT, OR ANY INFORMATION OR KNOW-HOW EMBODIED THEREIN, TO ANY THIRD PARTY AND (2) NOT TO REPRODUCE OR USE THE DRAWING OR DOCUMENT TO MANUFACTURE ANY APPARATUS OR DEVICE, WITHOUT THE PRIOR WRITTEN AUTHORIZATION OF HARSCO TRACK TECHNOLOGIES.

SOLID EDGE DRAWING

ITEM	SIZE/TYPE/ LENGTH	QTY	LENGTH	DESCRIPTION	HOSE TYPE	WHERE IT GOES ON THE MACHINE
WORKHEAD INSTALLATION						
601	12HP58	1	58	3/4 HIGH PRESSURE	FC735-12	A PORT TO PISTON END OF RIGHT W/H CYLINDER
602	12HP58	1	58	3/4 HIGH PRESSURE	FC735-12	B PORT TO ROD END OF RIGHT W/H CYLINDER
603	12HP58	1	58	3/4 HIGH PRESSURE	FC735-12	A PORT TO PISTON END OF LEFT W/H CYLINDER
604	12HP58	1	58	3/4 HIGH PRESSURE	FC735-12	B PORT TO ROD END OF LEFT W/H CYLINDER
605	12HP25	2	25	3/4 HIGH PRESSURE	FC735-12	3/4 BULKHEAD TO PISTON END OF LEFT AND RIGHT W/H CYLINDER
606	12HP16	1	16	3/4 HIGH PRESSURE	FC735-12	REAR 3/4 BULKHEAD TO ROD END OF RIGHT W/H CYLINDER
607	12HP20	1	20	3/4 HIGH PRESSURE	FC735-12	REAR 3/4 BULKHEAD TO ROD END OF LEFT W/H CYLINDER
608	8HP44	4	44	1/2 HIGH PRESSURE	FC735-8	FLOW CONTROL TO SQUEEZE MANIFOLDS
609	8HP59.5	4	59.5	1/2 HIGH PRESSURE	FC735-8	SQUEEZE IN AND OUT TO FLOW CONTROL LEFT AND RIGHT
610	4HP77.5	2	77.5	1/4 HIGH PRESSURE	FC735-4	FLOW CONTROL TO BULKHEAD TEE
611	4HP14	2	14	1/4 HIGH PRESSURE	FC735-4	FROM 1/4 BULKHEAD TO SQUEEZE PRESSURE PORT ON FLOW CONTROL VALVE
612	4HP37	1	37	1/4 HIGH PRESSURE	GH793-4	RIGHT SIDE TO LEFT SIDE BULKHEAD TEE TO 90 BULKHEAD
613	4HP34.5	1	34.5	1/4 HIGH PRESSURE	GH793-4	LEFT WORKHEAD TO SQUEEZE PRESSURE RELIEF VALVE
614	4HP18	2	18	1/4 HIGH PRESSURE	FC735-4	TRAVERSE LOCK CYLINDER TO PIPE
615	4HP20	2	20	1/4 HIGH PRESSURE	FC735-4	TRAVERSE LOCK CYLINDER TO PIPE
616	4HP37	1	37	1/4 HIGH PRESSURE	GH793-4	RIGHT WORKHEAD TO SQUEEZE PRESSURE RELIEF VALVE
617	8MP24	1	24	1/2 MEDIUM PRESSURE	GH663-8	SQUEEZE PRESSURE RELIEF VALVE TO RIGHT SIDE VIBRATOR MOTOR RETURN TEE
618						
619						
620						

IMPLIED TOLERANCES

ALL DIMENSIONS ARE IN INCHES - TOLERANCE UNLESS OTHERWISE SPECIFIED

NOMINAL SIZE RANGE		INCH PLUS OR MINUS		NOMINAL SIZE RANGE		METRIC PLUS OR MINUS	
OVER	TO	2 PLACE DECIMAL	3 PLACE DECIMAL	OVER	TO	1 PLACE DECIMAL	2 PLACE DECIMAL
0	6	.03	.005	0	150	.8	.13
6	24	.04	.008	150	600	1.0	.20
24	-	.06	.010	-	600	1.5	.25

UNLESS OTHERWISE SPECIFIED ALL MACHINED SURFACES WILL HAVE;
A SURFACE FINISH OF 125 MICROINCHES
ANGULAR TOLERANCE OF ± .50°
CONCENTRICITY WITHIN .010

THIRD ANGLE PROJECTION

UNLESS OTHERWISE SPECIFIED ALL WELDS SHOULD ADHERE TO THE LATEST HTT WELDING SPECIFICATION 101

CHANGE	R/L	REVISION		DATE
EC501889	A	NEW RELEASE	GMM	7-1-11
EC502954	B	ADDED IT-1110	BCB	2/15/12
EC503288	C	UPDATED FC211 TO GH663 & FC136 TO GH 493 HOSES	GMM	3/23/12

Description: HOSE KIT

Drawing Number: ----------

Machine Type: MARK IV

Model: 5009363.dft

Drawn: kadams

Date Drawn: 7/1/11

Weight: ----------

Scale: -----

APVD Desg: BPA

APVD ChEng: BPA

Mat'l: ----------

HTT
Harsco Track Technologies
Harsco
Columbia, SC

Part Number: 5009363

Size: B

Sheet: 6 of 15

Plotted by gmancini on 3/23/2012 5009363.dft

CONFIDENTIAL

© COPYRIGHT 2001 HARSCO TRACK TECHNOLOGIES. THIS DRAWING OR DOCUMENT IS THE PROPERTY OF HARSCO TRACK TECHNOLOGIES AND EMBODIES CONFIDENTIAL INFORMATION, TRADE SECRET INFORMATION, AND/OR KNOW-HOW THAT IS THE PROPERTY OF HARSCO TRACK TECHNOLOGIES. BY ACCEPTING THIS DRAWING OR DOCUMENT, THE RECIPIENT AGREES (1) NOT TO PROVIDE, OR OTHERWISE MAKE AVAILABLE, THE DRAWING OR DOCUMENT, OR ANY INFORMATION OR KNOW-HOW EMBODIED THEREIN, TO ANY THIRD PARTY AND (2) NOT TO REPRODUCE OR USE THE DRAWING OR DOCUMENT TO MANUFACTURE ANY APPARATUS OR DEVICE, WITHOUT THE PRIOR WRITTEN AUTHORIZATION OF HARSCO TRACK TECHNOLOGIES.

SOLID EDGE DRAWING

ITEM	SIZE/TYPE/ LENGTH	QTY	LENGTH	DESCRIPTION	HOSE TYPE	WHERE IT GOES ON THE MACHINE
HYDRAULIC OIL COOLER						
701	20MP50	1	50	1 1/4 MEDIUM PRESSURE	GH 663-20	LEFT SIDE VIBRATOR MOTOR RETURN LINE TO TEE ON INLET OF OIL COOLER THERMAL BY PASS VALVE
702	20MP58	1	58	1 1/4 MEDIUM PRESSURE	GH 663-20	RIGHT SIDE VIBRATOR MOTOR RETURN LINE TO TEE ON INLET OF OIL COOLER THERMAL BY PASS VALVE
703	24MP21-90	1	21	1 1/2 MEDIUM PRESSURE	GH 663-24	THERMAL BY PASS VALVE OUTLET TO TEE ON OIL COOLER INLET **90 DEGREE HOSE ENDS ON BOTH ENDS WITH HOSE ENDS ORIENTED 90 DEGREES APART**
704	32MP152	1	152	2 MEDIUM PRESSURE	GH 663-32	OUTLET OF COOLER TO RETURN MANIFOLD ON HYDRAULIC TANK
705	6HP10	1	10	3/8 HIGH PRESSURE	FC 735-6	P PORT ON OIL COOLER FAN CONTROL VALVE TO PORTED TEE ON LEFT SIDE P1-P2 PRESSURE LINE
706	8MP16.5	1	16 1/2	1/2 MEDIUM PRESSURE	GH 663-8	T PORT ON OIL COOLER FAN CONTROL VALVE TO PORTED TEE ON LEFT SIDE RETURN LINE
707	6HP26	1	26	3/8 HIGH PRESSURE	FC 735-6	A PORT ON OIL COOLER FAN CONTROL VALVE TO BOTTOM PORT ON OIL COOLER FAN MOTOR
708	8MP37	1	37	1/2 MEDIUM PRESSURE	GH 663-8	B PORT ON OIL COOLER FAN CONTROL VALVE TO TOP PORT ON OIL COOLER FAN MOTOR
709	6MP152	1	152	3/8 MEDIUM PRESSURE	GH 663-6	CASE DRAIN PORT ON OIL COOLER FAN MOTOR TO LEFT FRONT PORT OF CENTER COVER ON HYDRAULIC TANK
710						
711						
712						
713						
714						
715						
716						
717						
718						
719						
720						

IMPLIED TOLERANCES

ALL DIMENSIONS ARE IN INCHES - TOLERANCE UNLESS OTHERWISE SPECIFIED

NOMINAL SIZE RANGE OVER	TO	INCH PLUS OR MINUS 2 PLACE DECIMAL	3 PLACE DECIMAL	NOMINAL SIZE RANGE OVER	TO	METRIC PLUS OR MINUS 1 PLACE DECIMAL	2 PLACE DECIMAL
0	6	.03	.005	0	150	.8	.13
6	24	.04	.008	150	600	1.0	.20
24	-	.06	.010	-	600	1.5	.25

UNLESS OTHERWISE SPECIFIED ALL MACHINED SURFACES WILL HAVE;
A SURFACE FINISH OF 125 MICROINCHES
ANGULAR TOLERANCE OF ± .50°
CONCENTRICITY WITHIN .010

THIRD ANGLE PROJECTION

UNLESS OTHERWISE SPECIFIED ALL WELDS SHOULD ADHERE TO THE LATEST HTT WELDING SPECIFICATION 101

CHANGE	R/L	REVISION		DATE
EC501889	A	NEW RELEASE	GMM	7-1-11
EC502954	B	ADDED IT-1110	BCB	2/15/12
EC503288	C	UPDATED FC211 TO GH663 & FC136 TO GH 493 HOSES	GMM	3/23/12

Description: HOSE KIT

Drawing Number: ----------
Machine Type: MARK IV
Model: 5009363.dft
Drawn: kadams
Date Drawn: 7/1/11
Weight: ----------
Scale: -----
APVD Desg: BPA
APVD ChEng: BPA
Mat'l: ----------

HTT
Harsco Track Technologies
Harsco
Columbia, SC

Part Number: 5009363
Size: B
Sheet: 7 of 15

Plotted by gmancini on 3/23/2012 5009363.dft

CONFIDENTIAL

© COPYRIGHT 2001 HARSCO TRACK TECHNOLOGIES. THIS DRAWING OR DOCUMENT IS THE PROPERTY OF HARSCO TRACK TECHNOLOGIES AND EMBODIES CONFIDENTIAL INFORMATION, TRADE SECRET INFORMATION, AND/OR KNOW-HOW THAT IS THE PROPERTY OF HARSCO TRACK TECHNOLOGIES. BY ACCEPTING THIS DRAWING OR DOCUMENT, THE RECIPIENT AGREES (1) NOT TO PROVIDE, OR OTHERWISE MAKE AVAILABLE, THE DRAWING OR DOCUMENT, OR ANY INFORMATION OR KNOW-HOW EMBODIED THEREIN, TO ANY THIRD PARTY AND (2) NOT TO REPRODUCE OR USE THE DRAWING OR DOCUMENT TO MANUFACTURE ANY APPARATUS OR DEVICE, WITHOUT THE PRIOR WRITTEN AUTHORIZATION OF HARSCO TRACK TECHNOLOGIES.

SOLID EDGE DRAWING

ITEM	SIZE/TYPE/ LENGTH	QTY	LENGTH	DESCRIPTION	HOSE TYPE	WHERE IT GOES ON THE MACHINE
				REAR TRACTION		
801	20SHP66	1	66	1-1/4 SUPER HIGH PRESS	GH 493-20	TRACTION VALVE A PORT TO MOTOR (HOSE END P/N B3913Y03) - **TOP (B PORT)**
802	20SHP66	1	66	1-1/4 SUPER HIGH PRESS	GH 493-20	TRACTION VALVE B PORT TO MOTOR (HOSE END P/N AB3913Y03) - **BOTTOM (A PORT)**
803	20SHP49	1	49	1-1/4 SUPER HIGH PRESS	GH 493-20	FROM 1-1/2" PRESSURE HARD LINE TO PRESSURE PORT AT TRACTION VALVE
804	8HP68	1	68	1/2 HIGH PRESSURE	GH 793-8	FROM FRONT JUNCTION BLK ON INSIDE OF TRACTION VALVE MTG PLATE TO BOTTOM JUNCTION BLK ON LEFT SIDE OF FRAME **HOSE ENDS: JIC SWIVEL X SHORT 90 JIC SW-REF**
805	4HP19	1	19	1/4 HIGH PRESSURE	GH 793-4	CHECK VALVE TO CHECK VALVE ON TRACTION VALVE
806	4HP70	1	72	1/4 HIGH PRESSURE	GH 793-4	TEE ON CHECK VALVE TO 1/2 HARD LINE ON LEFT SIDE OF MACHINE
807	12MP103	1	103	3/4 MEDIUM PRESSURE	GH 663-12	CASE DRAIN ON TRACTION MOTOR TO HARD LINE
808	8MP69	1	69	1/2 MEDIUM PRESSURE	GH 663-8	FROM BULKHEAD IN TRACTION VALVE PLATE TO TOP JUNCTION BLOCK ON LEFT SIDE OF CAB **HOSE ENDS: JIC SWIVEL X SHORT 90 JIC SW**
809	6MP26	1	26	3/8 MEDIUM PRESSURE	GH 663-6	FROM HARD LINE TO RETURN ON LEFT TOP SIDE OF HYD TANK
810	8MP52	1	52	1/2 MEDIUM PRESSURE	GH 793-8	INSIDE HARDLINE ON LEFT SIDE OF FRAME TO TOP INSIDE HARDLINE
811	8MP52	1	52	1/2 MEDIUM PRESSURE	GH 663-8	OUTSIDE HARDLINE ON LEFT SIDE OF FRAME TO OUTSIDE HARDLINE
812	12MP79		79	3/4 MEDIUM PRESSURE	GH 663-12	FROM MIDDLE JUNCTION BLOCK ON 3" CLAMP AT REAR OF MACHINE TO HARDLINE 1" ON RIGHT SIDE OF FRAME - **SHORT 90°**
813	12MP52		52	3/4 MEDIUM PRESSURE	GH 663-12	NEAR CAB AT TOP OF FRAME (1" HARDLINE) TO 1" HARDLINE OF TOP OF FRAME ON RIGHT SIDE OF FRAME-S-S
814						
815						
816						
817						
818						
819						
820						

IMPLIED TOLERANCES

ALL DIMENSIONS ARE IN INCHES - TOLERANCE UNLESS OTHERWISE SPECIFIED

NOMINAL SIZE RANGE OVER	TO	INCH PLUS OR MINUS 2 PLACE DECIMAL	3 PLACE DECIMAL	NOMINAL SIZE RANGE OVER	TO	METRIC PLUS OR MINUS 1 PLACE DECIMAL	2 PLACE DECIMAL
0	6	.03	.005	0	150	.8	.13
6	24	.04	.008	150	600	1.0	.20
24	-	.06	.010	-	600	1.5	.25

UNLESS OTHERWISE SPECIFIED ALL MACHINED SURFACES WILL HAVE;
A SURFACE FINISH OF 125 MICROINCHES
ANGULAR TOLERANCE OF ± .50°
CONCENTRICITY WITHIN .010

THIRD ANGLE PROJECTION

UNLESS OTHERWISE SPECIFIED ALL WELDS SHOULD ADHERE TO THE LATEST HTT WELDING SPECIFICATION 101

CHANGE	R/L	REVISION		DATE
EC501889	A	NEW RELEASE	GMM	7-1-11
EC502954	B	ADDED IT-1110	BCB	2/15/12
EC503288	C	UPDATED FC211 TO GH663 & FC136 TO GH 493 HOSES	GMM	3/23/12

Description: HOSE KIT

Drawing Number: ----------

Machine Type: MARK IV

Model: 5009363.dft

Drawn: kadams

Date Drawn: 7/1/11

Weight: ----------

Scale: -----

APVD Desg: BPA

APVD ChEng: BPA

Mat'l: ----------

HTT
Harsco Track Technologies
Harsco
Columbia, SC

Part Number: 5009363

Size: B

Sheet: 8 of 15

Plotted by gmancini on 3/23/2012 5009363.dft

CONFIDENTIAL

© COPYRIGHT 2001 HARSCO TRACK TECHNOLOGIES. THIS DRAWING OR DOCUMENT IS THE PROPERTY OF HARSCO TRACK TECHNOLOGIES AND EMBODIES CONFIDENTIAL INFORMATION, TRADE SECRET INFORMATION, AND/OR KNOW-HOW THAT IS THE PROPERTY OF HARSCO TRACK TECHNOLOGIES. BY ACCEPTING THIS DRAWING OR DOCUMENT, THE RECIPIENT AGREES (1) NOT TO PROVIDE, OR OTHERWISE MAKE AVAILABLE, THE DRAWING OR DOCUMENT, OR ANY INFORMATION OR KNOW-HOW EMBODIED THEREIN, TO ANY THIRD PARTY AND (2) NOT TO REPRODUCE OR USE THE DRAWING OR DOCUMENT TO MANUFACTURE ANY APPARATUS OR DEVICE, WITHOUT THE PRIOR WRITTEN AUTHORIZATION OF HARSCO TRACK TECHNOLOGIES.

SOLID EDGE DRAWING

ITEM	SIZE/TYPE/ LENGTH	QTY	LENGTH	DESCRIPTION	HOSE TYPE	WHERE IT GOES ON THE MACHINE
REAR LOCKOUTS						
901	6MP83	1	83	3/8 MEDIUM PRESSURE	GH 663-6	TANK PORT ON TRACTION VALVE TO TOP BULKHEAD IN BULKHEAD PLATE FOR LOCKOUT
902	6MP99	1	99	3/8 MEDIUM PRESSURE	GH 663-6	UNION ON TRACTION MOUNTING PLATE TO BOTTOM BULKHEAD IN BULKHEAD PLATE FOR LOCKOUT
903	6MP30	1	30	3/8 MEDIUM PRESSURE	GH 663-6	LOCKOUT BULKHEAD PLATE TOP BULKHEAD TO LEFT LOCKOUT CYLINDER (PISTON END)
904	6MP36	1	36	3/8 MEDIUM PRESSURE	GH 663-6	LOCKOUT BULKHEAD PLATE BOTTOM BULKHEAD TO LEFT LOCKOUT (ROD END)
905	6MP52	1	52	3/8 MEDIUM PRESSURE	GH 663-6	LOCKOUT BULKHEAD PLATE TOP BULKHEAD TO RIGHT LOCKOUT CYLINDER PISTON
906	6MP58	1	58	3/8 MEDIUM PRESSURE	GH 663-6	LOCKOUT BULKHEAD PLATE BOTTOM BULKHEAD TO RIGHT LOCKOUT CYLINDER (ROD END)
EMERGENCY PUMP						
907	6HP78	1	78	3/8 HIGH PRESSURE	GH 793-6	OUT TO P-1 AND P-2 SYSTEM
908	6MP83	1	83	3/8 MEDIUM PRESSURE	GH 663-6	EMERGENCY PUMP CASE DRAIN TO RIGHT COVER FRONT OUTSIDE FITTING
909	6MP57	1	57	3/8 MEDIUM PRESSURE	GH 663-6	EMERGENCY PUMP SUCTION TO SUPPLY
DECEL RELIEF VALVE						
910	4HP17	1	17	1/4 HIGH PRESSURE	GH 793-4	P PORT ON WORKHEAD VALVE TO FILTER
911	4HP22	1	22	1/4 HIGH PRESSURE	GH 793-4	CHECK VALVE IN OUT PORT OF FILTER TEE IN PORT 2 OF DECEL VALVE
912	4HP24	1	24	1/4 HIGH PRESSURE	GH 793-4	PORT 1 OF DECEL VALVE TO HARD LINE LEFT SIDE
913	4HP62	1	62	1/4 HIGH PRESSURE	GH 793-4	PORT 3 OF DECEL VALVE TO HARD LINE RIGHT SIDE
914						
915						
916						
917						
918						
919						
920						

IMPLIED TOLERANCES

ALL DIMENSIONS ARE IN INCHES - TOLERANCE UNLESS OTHERWISE SPECIFIED

NOMINAL SIZE RANGE OVER	TO	INCH PLUS OR MINUS 2 PLACE DECIMAL	3 PLACE DECIMAL	NOMINAL SIZE RANGE OVER	TO	METRIC PLUS OR MINUS 1 PLACE DECIMAL	2 PLACE DECIMAL
0	6	.03	.005	0	150	.8	.13
6	24	.04	.008	150	600	1.0	.20
24	-	.06	.010	-	600	1.5	.25

UNLESS OTHERWISE SPECIFIED ALL MACHINED SURFACES WILL HAVE;
A SURFACE FINISH OF 125 MICROINCHES
ANGULAR TOLERANCE OF ± .50°
CONCENTRICITY WITHIN .010

THIRD ANGLE PROJECTION

UNLESS OTHERWISE SPECIFIED ALL WELDS SHOULD ADHERE TO THE LATEST HTT WELDING SPECIFICATION 101

CHANGE	R/L	REVISION		DATE
EC501889	A	NEW RELEASE	GMM	7-1-11
EC502954	B	ADDED IT-1110	BCB	2/15/12
EC503288	C	UPDATED FC211 TO GH663 & FC136 TO GH 493 HOSES	GMM	3/23/12

Description: HOSE KIT

Drawing Number: ----------

Machine Type: MARK IV

Model: 5009363.dft

Drawn: kadams

Date Drawn: 7/1/11

Weight: ----------

Scale: -----

APVD Desg: BPA

APVD ChEng: BPA

Mat'l: ----------

HTT
Harsco Track Technologies
Harsco
Columbia, SC

Part Number: 5009363

Size: B

Sheet: 9 of 15

Plotted by gmancini on 3/23/2012 5009363.dft

CONFIDENTIAL

© COPYRIGHT 2001 HARSCO TRACK TECHNOLOGIES. THIS DRAWING OR DOCUMENT IS THE PROPERTY OF HARSCO TRACK TECHNOLOGIES AND EMBODIES CONFIDENTIAL INFORMATION, TRADE SECRET INFORMATION, AND/OR KNOW-HOW THAT IS THE PROPERTY OF HARSCO TRACK TECHNOLOGIES. BY ACCEPTING THIS DRAWING OR DOCUMENT, THE RECIPIENT AGREES (1) NOT TO PROVIDE, OR OTHERWISE MAKE AVAILABLE, THE DRAWING OR DOCUMENT, OR ANY INFORMATION OR KNOW-HOW EMBODIED THEREIN, TO ANY THIRD PARTY AND (2) NOT TO REPRODUCE OR USE THE DRAWING OR DOCUMENT TO MANUFACTURE ANY APPARATUS OR DEVICE, WITHOUT THE PRIOR WRITTEN AUTHORIZATION OF HARSCO TRACK TECHNOLOGIES.

SOLID EDGE DRAWING

ITEM	SIZE/TYPE/ LENGTH	QTY	LENGTH	DESCRIPTION	HOSE TYPE	WHERE IT GOES ON THE MACHINE
BRAKE HOSES						
1001	12MP181	1	181	3/4 MEDIUM PRESSURE	FC 350A-12	DRYER TO AIR TANK
1002	8MP24	1	24	1/2 MEDIUM PRESSURE	FC 350A-8	TEE TO BRAKE PRESSURE PROTECTION VALVE
1003	8MP301	1	301	1/2 MEDIUM PRESSURE	FC 350A-8	CENTER BULKHEAD TEE TO AIR TANK
1004	8MP24	4	24	1/2 MEDIUM PRESSURE	FC 350A-8	AIR TO FRONT BRAKE SUPPLY VALVE
1005	8MP78	1	78	1/2 MEDIUM PRESSURE	FC 350A-8	BULKHEAD TO REAR BRAKE SUPPLY VALVE
1006	8MP209	1	209	1/2 MEDIUM PRESSURE	FC 350A-8	CENTER BULKHEAD TO REAR BULKHEAD
1007	4PM208	2	208	1/4 MEDIUM PRESSURE	FC 350A-4	CENTER BULKHEAD TO FRONT BRAKE VALVES
1008	4PM243	2	243	1/4 MEDIUM PRESSURE	FC 350A-4	E-STOP BRAKE VALVE (MAC) PORT 3 ORIFICE & SNUBBER FITTING TO CENTER BULKHEADS
1009	4PM38	1	38	1/4 MEDIUM PRESSURE	FC 350A-4	INDEX BRAKE VALVE TO SECOND SHUTTLE ON E-STOP BRAKE VALVE (MAC) PORT 2
1010	4PM78	1	78	1/4 MEDIUM PRESSURE	FC 350A-4	FRONT BRAKE TO BULKHEAD PLATE
1011	4PM97	1	97	1/4 MEDIUM PRESSURE	FC 350A-4	FRONT BRAKE RELAY TO BULKHEAD PLATE
1012	4PM102	2	102	1/4 MEDIUM PRESSURE	FC 350A-4	REAR SERVICE BRAKE RELAY VALVE PILOT & REAR FAIL-SAFE RELAY VALVE PILOT TO FITTINGS UNDER CAB
1013	4LP75	1	75	1/4 LOW PRESSURE	2556-4	VENT AIR LINE
1014	6MP210	1	210	3/8 MEDIUM PRESSURE	FC 350A-6	CENTER AIR MANIFOLD TO INDEX BRAKE VALVE ASSEMBLY SUPPLY PORT TEE
1015	6MP10	1	10	3/8 MEDIUM PRESSURE	FC 350A-6	TEE ON INDEX BRAKE VALVE ASSEMBLY SUPPLY PORT TO AIR HORN VALVE
1016	4MP36	1	36	1/4 MEDIUM PRESSURE	FC 350A-4	REAR BULKHEAD SUPPLY TO SUPPLY MAC VALVE PORT 3
1017	8MP24	1	24	1/2 MEDIUM PRESSURE	FC 350A-8	FRONT BRAKE VALVE TO FRONT BRAKE VALVE
1018	8MP24	1	24	1/2 MEDIUM PRESSURE	FC 350A-8	REAR BRAKE VALVE TO REAR BRAKE VALVE
1019	6MP210	1	32	3/8 MEDIUM PRESSURE	FC 350A-6	BRAKE PROTECTION VALVE TO SHADOW BOARD VALVE SUPPLY
1020	6MP210	1	17.5	3/8 MEDIUM PRESSURE	FC 350A-6	AIR DRYER TO PULSE TANK
1021						
1022						
1023						
1024						
1025						

IMPLIED TOLERANCES

ALL DIMENSIONS ARE IN INCHES - TOLERANCE UNLESS OTHERWISE SPECIFIED

NOMINAL SIZE RANGE OVER	TO	INCH PLUS OR MINUS 2 PLACE DECIMAL	3 PLACE DECIMAL	NOMINAL SIZE RANGE OVER	TO	METRIC PLUS OR MINUS 1 PLACE DECIMAL	2 PLACE DECIMAL
0	6	.03	.005	0	150	.8	.13
6	24	.04	.008	150	600	1.0	.20
24	-	.06	.010	-	600	1.5	.25

UNLESS OTHERWISE SPECIFIED ALL MACHINED SURFACES WILL HAVE;
A SURFACE FINISH OF 125 MICROINCHES
ANGULAR TOLERANCE OF ± .50°
CONCENTRICITY WITHIN .010

THIRD ANGLE PROJECTION

UNLESS OTHERWISE SPECIFIED ALL WELDS SHOULD ADHERE TO THE LATEST HTT WELDING SPECIFICATION 101

CHANGE	R/L	REVISION		DATE
EC501889	A	NEW RELEASE	GMM	7-1-11
EC502954	B	ADDED IT-1110	BCB	2/15/12
EC503288	C	UPDATED FC211 TO GH663 & FC136 TO GH 493 HOSES	GMM	3/23/12

Description: HOSE KIT

Drawing Number: ----------

Machine Type: MARK IV

Model: 5009363.dft

Drawn: kadams

Date Drawn: 7/1/11

Weight: ----------

Scale: -----

APVD Desg: BPA

APVD ChEng: BPA

Mat'l: ----------

HTT
Harsco Track Technologies
Harsco
Columbia, SC

Part Number: 5009363

Size: B

Sheet: 10 of 15

Plotted by gmancini on 3/23/2012 5009363.dft

CONFIDENTIAL

© COPYRIGHT 2001 HARSCO TRACK TECHNOLOGIES. THIS DRAWING OR DOCUMENT IS THE PROPERTY OF HARSCO TRACK TECHNOLOGIES AND EMBODIES CONFIDENTIAL INFORMATION, TRADE SECRET INFORMATION, AND/OR KNOW-HOW THAT IS THE PROPERTY OF HARSCO TRACK TECHNOLOGIES. BY ACCEPTING THIS DRAWING OR DOCUMENT, THE RECIPIENT AGREES (1) NOT TO PROVIDE, OR OTHERWISE MAKE AVAILABLE, THE DRAWING OR DOCUMENT, OR ANY INFORMATION OR KNOW-HOW EMBODIED THEREIN, TO ANY THIRD PARTY AND (2) NOT TO REPRODUCE OR USE THE DRAWING OR DOCUMENT TO MANUFACTURE ANY APPARATUS OR DEVICE, WITHOUT THE PRIOR WRITTEN AUTHORIZATION OF HARSCO TRACK TECHNOLOGIES.

SOLID EDGE DRAWING

ITEM	SIZE/TYPE/ LENGTH	QTY	LENGTH	DESCRIPTION	HOSE TYPE	WHERE IT GOES ON THE MACHINE
SEAT ASSEMBLY (LHC = LEFTHAND CONSOLE)						
1101	4MP49.5	1	49 1/2	1/4 MEDIUM PRESSURE	FC 350A-4	FAILSAFE VALVE IN PORT TO LHC BULKHEAD (OUTSIDE)
1102	4MP7	1	7	1/4 MEDIUM PRESSURE	FC 350A-4	SERVICE BRAKE VALVE DELIVERY PORT TO LHC BULKHEAD (INSDE)
1103	4MP12	2	12	1/4 MEDIUM PRESSURE	FC 350A-4	SPRING BRAKE BLOWDOWN VALVE PORT 1 TO TEE ON SERVICE BRAKE VALVE SUPPLY PORT
1104	4MP7.5	1	7 1/2	1/4 MEDIUM PRESSURE	FC 350A-4	SERVICE BRAKE VALVE SUPPLY PORT TO LHC BULKHEAD (INSIDE)
1105	4MP190	2	190	1/4 MEDIUM PRESSURE	FC 350A-4	AIR SUPPLY UNDER CAB TO AIR SUPPLY LHC BULKHEAD (OUTSIDE)
1106	4MP200	1	200	1/4 MEDIUM PRESSURE	FC 350A-4	FAIL-SAFE VALVE DELIVERY PORT TO BULKHEAD TEE UNDER CAB
1107	4MP200	1	200	1/4 MEDIUM PRESSURE	FC 350A-4	SERVICE BRAKE DELIVERY LHC BULKEAD (OUTSIDE) TO 1ST SHUTTLE VALVE ON E-STOP BRAKE VALVE UNDER CAB
1108						
1109	4MP15	1	15	1/4 MEDIUM PRESSURE	FC 350A-4	SPRING BRAKE BLOWDOWN VALVE PORT 2 TO LHC BULKHEAD (INSIDE)
1110	4MP13	1	13	1/4 MEDIUM PRESSURE	FC 350A-4	SPRING BRAKE BLOWDOWN VALVE PORT 3 TO LHC BULKHEAD (INSIDE)
1111						
1112						
1113						
1114						
1115						
1116						
1117						
1118						
1119						
1120						

IMPLIED TOLERANCES

ALL DIMENSIONS ARE IN INCHES - TOLERANCE UNLESS OTHERWISE SPECIFIED

NOMINAL SIZE RANGE		INCH PLUS OR MINUS		NOMINAL SIZE RANGE		METRIC PLUS OR MINUS	
OVER	TO	2 PLACE DECIMAL	3 PLACE DECIMAL	OVER	TO	1 PLACE DECIMAL	2 PLACE DECIMAL
0	6	.03	.005	0	150	.8	.13
6	24	.04	.008	150	600	1.0	.20
24	-	.06	.010	-	600	1.5	.25

UNLESS OTHERWISE SPECIFIED ALL MACHINED SURFACES WILL HAVE;
A SURFACE FINISH OF 125 MICROINCHES
ANGULAR TOLERANCE OF ± .50°
CONCENTRICITY WITHIN .010

THIRD ANGLE PROJECTION

UNLESS OTHERWISE SPECIFIED ALL WELDS SHOULD ADHERE TO THE LATEST HTT WELDING SPECIFICATION 101

CHANGE	R/L	REVISION		DATE
EC501889	A	NEW RELEASE	GMM	7-1-11
EC502954	B	ADDED IT-1110	BCB	2/15/12
EC503288	C	UPDATED FC211 TO GH663 & FC136 TO GH 493 HOSES	GMM	3/23/12

Description: HOSE KIT

Drawing Number: ----------

Machine Type: MARK IV

Model: 5009363.dft

Drawn: kadams

Date Drawn: 7/1/11

Weight: ----------

Scale: -----

APVD Desg: BPA

APVD ChEng: BPA

Mat'l: ----------

HTT
Harsco Track Technologies
Harsco
Columbia, SC

Part Number: 5009363

Size: B

Sheet: 11 of 15

Plotted by gmancini on 3/23/2012 5009363.dft

CONFIDENTIAL

© COPYRIGHT 2001 HARSCO TRACK TECHNOLOGIES. THIS DRAWING OR DOCUMENT IS THE PROPERTY OF HARSCO TRACK TECHNOLOGIES AND EMBODIES CONFIDENTIAL INFORMATION, TRADE SECRET INFORMATION, AND/OR KNOW-HOW THAT IS THE PROPERTY OF HARSCO TRACK TECHNOLOGIES. BY ACCEPTING THIS DRAWING OR DOCUMENT, THE RECIPIENT AGREES (1) NOT TO PROVIDE, OR OTHERWISE MAKE AVAILABLE, THE DRAWING OR DOCUMENT, OR ANY INFORMATION OR KNOW-HOW EMBODIED THEREIN, TO ANY THIRD PARTY AND (2) NOT TO REPRODUCE OR USE THE DRAWING OR DOCUMENT TO MANUFACTURE ANY APPARATUS OR DEVICE, WITHOUT THE PRIOR WRITTEN AUTHORIZATION OF HARSCO TRACK TECHNOLOGIES.

SOLID EDGE DRAWING

ITEM	SIZE/TYPE/ LENGTH	QTY	LENGTH	DESCRIPTION	HOSE TYPE	WHERE IT GOES ON THE MACHINE
FRONT AXLE						
1201	4MP141	1	141	1/4 MEDIUM PRESSURE	FC350-04	FROM SERVICE BULK HEAD TO SERVICE BRAKE VALVE
1202	4MP106	1	106	1/4 MEDIUM PRESSURE	FC350-04	FROM SPRING BULLK HEAD TO SPRING BRAKE VALVE
1203	4MP32.5	1	32 1/2	1/4 MEDIUM PRESSURE	FC350-04	PILOT AT SPRING BRAKE TO DELIVER ON SERVICE VALVE
1204	6MP41	1	41	3/8 MEDIUM PRESSURE	FC350-06	SERVICE VALVE TO RIGHT BRAKE CHAMBER
1205	6MP17.5	1	17 1/2	3/8 MEDIUM PRESSURE	FC350-06	SERVICE VALVE TO LEFT BRAKE CHAMBER
1206	8MP19	1	19	1/2 MEDIUM PRESSURE	FC350-08	SPRING VALVE TO RIGHT BRAKE CHAMBER
1207	8MP45	1	45	1/2 MEDIUM PRESSURE	FC350-08	SPRING VALVE TO LEFT BRAKE CHAMBER
1208	8MP105	1	105	1/2 MEDIUM PRESSURE	FC350-08	TEE OFF AIR TANK TO SUPPLY ON SPRING BRAKE VALVE
1209	8MP31	1	31	1/2 MEDIUM PRESSURE	FC350-08	SPRING VALVE SUPPLY TO SERVICE VALVE SUPPLY
1210						
1211						
1212						
1213						
1214						
1215						
1216						
1217						
1218						
1219						
1220						

IMPLIED TOLERANCES

ALL DIMENSIONS ARE IN INCHES - TOLERANCE UNLESS OTHERWISE SPECIFIED

NOMINAL SIZE RANGE		INCH PLUS OR MINUS		NOMINAL SIZE RANGE		METRIC PLUS OR MINUS	
OVER	TO	2 PLACE DECIMAL	3 PLACE DECIMAL	OVER	TO	1 PLACE DECIMAL	2 PLACE DECIMAL
0	6	.03	.005	0	150	.8	.13
6	24	.04	.008	150	600	1.0	.20
24	-	.06	.010	-	600	1.5	.25

UNLESS OTHERWISE SPECIFIED ALL MACHINED SURFACES WILL HAVE;
A SURFACE FINISH OF 125 MICROINCHES
ANGULAR TOLERANCE OF ± .50°
CONCENTRICITY WITHIN .010

THIRD ANGLE PROJECTION

UNLESS OTHERWISE SPECIFIED ALL WELDS SHOULD ADHERE TO THE LATEST HTT WELDING SPECIFICATION 101

CHANGE	R/L	REVISION	DATE
EC501889	A	NEW RELEASE GMM	7-1-11
EC502954	B	ADDED IT-1110 BCB	2/15/12
EC503288	C	UPDATED FC211 TO GH663 & FC136 TO GH 493 HOSES GMM	3/23/12

Description: HOSE KIT

Drawing Number: ----------

Machine Type: MARK IV

Model: 5009363.dft

Drawn: kadams

Date Drawn: 7/1/11

Weight: ----------

Scale: -----

APVD Desg: BPA

APVD ChEng: BPA

Mat'l: ----------

HTT
Harsco Track Technologies
Harsco
Columbia, SC

Part Number: 5009363

Size: B

Sheet: 12 of 15

Plotted by gmancini on 3/23/2012 5009363.dft

CONFIDENTIAL

© COPYRIGHT 2001 HARSCO TRACK TECHNOLOGIES. THIS DRAWING OR DOCUMENT IS THE PROPERTY OF HARSCO TRACK TECHNOLOGIES AND EMBODIES CONFIDENTIAL INFORMATION, TRADE SECRET INFORMATION, AND/OR KNOW-HOW THAT IS THE PROPERTY OF HARSCO TRACK TECHNOLOGIES. BY ACCEPTING THIS DRAWING OR DOCUMENT, THE RECIPIENT AGREES (1) NOT TO PROVIDE, OR OTHERWISE MAKE AVAILABLE, THE DRAWING OR DOCUMENT, OR ANY INFORMATION OR KNOW-HOW EMBODIED THEREIN, TO ANY THIRD PARTY AND (2) NOT TO REPRODUCE OR USE THE DRAWING OR DOCUMENT TO MANUFACTURE ANY APPARATUS OR DEVICE, WITHOUT THE PRIOR WRITTEN AUTHORIZATION OF HARSCO TRACK TECHNOLOGIES.

SOLID EDGE DRAWING

ITEM	SIZE/TYPE/ LENGTH	QTY	LENGTH	DESCRIPTION	HOSE TYPE	WHERE IT GOES ON THE MACHINE
				REAR AXLE		
1301	4MP71	1	71	1/4 MEDIUM PRESSURE	FC350-04	SERVICE BRAKE PILOT TO SHUTTLE VALVE ON E-STOP VALVE
1302	4MP68	1	68	1/4 MEDIUM PRESSURE	FC350-04	SPRING BRAKE PILOT TO BULKHEAD TEE
1303	4MP30	1	30	1/4 MEDIUM PRESSURE	FC350-04	DELIVERY PORT SERVICE VALVE TO PILOT ON SPRING BRAKE
1304	6MP43	1	43	3/8 MEDIUM PRESSURE	FC350-06	SERVICE VALVE TO RIGHT BRAKE CHAMBER
1305	6MP22	1	22	3/8 MEDIUM PRESSURE	FC350-06	SERVICE VALVE TO LEFT BRAKE CHAMBER
1306	8MP44	1	44	1/2 MEDIUM PRESSURE	FC350-08	SPRING VALVE TO LEFT BRAKE CHAMBER
1307	8MP20	1	20	1/2 MEDIUM PRESSURE	FC350-08	SPRING VALVE TO RIGHT BRAKE CHAMBER
1308	8MP18	1	18	1/2 MEDIUM PRESSURE	FC350-08	SPRING VALVE SUPPLY TO SERVICE VALVE
1309	8MP16.5	1	16 1/2	1/2 MEDIUM PRESSURE	FC350-08	SUPPLY BULKHEAD TEE TO SPRING BRAKE VALVE
				WORKHEAD SQUEEZE CYLINDER HOSES		
1310	6HP13	1	13	3/8 HIGH PRESSURE	FC735-6	TOP FRONT OUTSIDE PORT OF LEFT SQUEEZE MANIFOLD TO PISTON END OF CYLINDER
1311	6HP13	1	13	3/8 HIGH PRESSURE	FC735-6	TOP REAR OUTSIDE PORT OF LEFT SQUEEZE MANIFOLD TO ROD END OF CYLINDER
1312	6HP13	1	13	3/8 HIGH PRESSURE	FC735-6	TOP FRONT OUTSIDE PORT OF RIGHT SQUEEZE MANIFOLD TO PISTON END OF CYLINDER
1313	6HP13	1	13	3/8 HIGH PRESSURE	FC735-6	TOP REAR OUTSIDE PORT OF RIGHT SQUEEZE MANIFOLD TO ROD END OF CYLINDER
1314	6HP17.5	1	17.5	3/8 HIGH PRESSURE	FC735-6	BOTTOM FRONT OUTSIDE PORT OF LEFT SQUEEZE MANIFOLD TO PISTON END ON CYLINDER
1315	6HP17.5	1	17.5	3/8 HIGH PRESSURE	FC735-6	BOTTOM REAR OUTSIDE PORT OF LEFT SQUEEZE MANIFOLD TO ROD END OF CYLINDER
1316	6HP17.5	1	17.5	3/8 HIGH PRESSURE	FC735-6	BOTTOM FRONT OUTSIDE PORT OF RIGHT SQUEEZE MANIFOLD TO PISTON END ON CYLINDER
1317	6HP17.5	1	17.5	3/8 HIGH PRESSURE	FC735-6	BOTTOM REAR OUTSIDE PORT OF RIGHT SQUEEZE MANIFOLD TO ROD END OF CYLINDER
1318	6HP22	1	22	3/8 HIGH PRESSURE	FC735-6	TOP FRONT INSIDE PORT TO PISTON END OF LEFT FRONT INSIDE SQUEEZE CYLINDER, RIGHT SIDE
1319	6HP22	1	22	3/8 HIGH PRESSURE	FC735-6	TOP FRONT INSIDE PORT TO PISTON END OF RIGHT FRONT INSIDE SQUEEZE CYLINDER, LEFT SIDE
1320	6HP26	1	26	3/8 HIGH PRESSURE	FC735-6	TOP REAR INSIDE PORT TO ROD END OF LEFT FRONT SQUEEZE CYLINDER, RIGHT SIDE
1321	6HP26	1	26	3/8 HIGH PRESSURE	FC735-6	TOP REAR INSIDE PORT TO ROD END OF RIGHT FRONT SQUEEZE CYLINDER, LEFT SIDE
1322	6HP34	1	34	3/8 HIGH PRESSURE	FC735-6	BOTTOM FRONT INSIDE PORT TO PISTON END OF RIGHT FRONT SQUEEZE CYLINDER, RIGHT SIDE
1323	6HP34	1	34	3/8 HIGH PRESSURE	FC735-6	BOTTOM FRONT INSIDE PORT TO PISTON END OF LEFT FRONT SQUEEZE CYLINDER, LEFT SIDE
1324	6HP37	1	37	3/8 HIGH PRESSURE	FC735-6	BOTTOM REAR INSIDE PORT TO ROD END OF RIGHT FRONT SQUEEZE CYLINDER, RIGHT SIDE
1325	6HP37	1	37	3/8 HIGH PRESSURE	FC735-6	BOTTOM REAR INSIDE PORT TO ROD END OF LEFT FRONT SQUEEZE CYLINDER, LEFT SIDE
1326						
1327						
1328						
1329						
1330						

IMPLIED TOLERANCES

ALL DIMENSIONS ARE IN INCHES - TOLERANCE UNLESS OTHERWISE SPECIFIED

INCH NOMINAL SIZE RANGE OVER	TO	PLUS OR MINUS 2 PLACE DECIMAL	3 PLACE DECIMAL	METRIC NOMINAL SIZE RANGE OVER	TO	PLUS OR MINUS 1 PLACE DECIMAL	2 PLACE DECIMAL
0	6	.03	.005	0	150	.8	.13
6	24	.04	.008	150	600	1.0	.20
24	-	.06	.010	-	600	1.5	.25

UNLESS OTHERWISE SPECIFIED ALL MACHINED SURFACES WILL HAVE;
A SURFACE FINISH OF 125 MICROINCHES
ANGULAR TOLERANCE OF ± .50°
CONCENTRICITY WITHIN .010

THIRD ANGLE PROJECTION

UNLESS OTHERWISE SPECIFIED ALL WELDS SHOULD ADHERE TO THE LATEST HTT WELDING SPECIFICATION 101

CHANGE	R/L	REVISION		DATE
EC501889	A	NEW RELEASE	GMM	7-1-11
EC502954	B	ADDED IT-1110	BCB	2/15/12
EC503288	C	UPDATED FC211 TO GH663 & FC136 TO GH 493 HOSES	GMM	3/23/12

Description: HOSE KIT

Drawing Number: ----------

Machine Type: MARK IV

Model: 5009363.dft

Drawn: kadams

Date Drawn: 7/1/11

Weight: ----------

Scale: -----

APVD Desg: BPA

APVD ChEng: BPA

Mat'l: ----------

HTT
Harsco Track Technologies
Harsco
Columbia, SC

Part Number: 5009363

Size: B

Sheet: 13 of 15

Plotted by gmancini on 3/23/2012 5009363.dft

CONFIDENTIAL

© COPYRIGHT 2001 HARSCO TRACK TECHNOLOGIES. THIS DRAWING OR DOCUMENT IS THE PROPERTY OF HARSCO TRACK TECHNOLOGIES AND EMBODIES CONFIDENTIAL INFORMATION, TRADE SECRET INFORMATION, AND/OR KNOW-HOW THAT IS THE PROPERTY OF HARSCO TRACK TECHNOLOGIES. BY ACCEPTING THIS DRAWING OR DOCUMENT, THE RECIPIENT AGREES (1) NOT TO PROVIDE, OR OTHERWISE MAKE AVAILABLE, THE DRAWING OR DOCUMENT, OR ANY INFORMATION OR KNOW-HOW EMBODIED THEREIN, TO ANY THIRD PARTY AND (2) NOT TO REPRODUCE OR USE THE DRAWING OR DOCUMENT TO MANUFACTURE ANY APPARATUS OR DEVICE, WITHOUT THE PRIOR WRITTEN AUTHORIZATION OF HARSCO TRACK TECHNOLOGIES.

SOLID EDGE DRAWING

ITEM	SIZE/TYPE/ LENGTH	QTY	LENGTH	DESCRIPTION	HOSE TYPE	WHERE IT GOES ON THE MACHINE
ENGINE SKID ASSEMBLY						
1401	4HP14	1	14	1/4 HIGH PRESSURE	REF	P-2 LOAD SENSING TO TEE ON P-1 LOAD SENSING
1402	4HP18	1	18	1/4 HIGH PRESSURE	REF	TEE ON P-1 LOAD SENSING TO P PORT ON PUMP CONTROL VALVE
1403	4HP43	1	43	1/4 HIGH PRESSURE	REF	TANK PORT ON PUMP CONTROL VALVE TO MIDDLE HARDLINE ON TANK
1404	12MP84	1	84	3/4 MEDIUM PRESSURE	GH 663-12	REMOTE OIL DRAIN
1405	6MP60	1	60	3/8 MEDIUM PRESSURE	GH 663-6	BOTTOM OF OIL COOLER MANIFOLD TO P-1 CASE DRAIN
1406	6MP60	1	60	3/8 MEDIUM PRESSURE	GH 663-6	BOTTOM OF OIL COOLER MANIFOLD TO P-2 CASE DRAIN
1407	4MP70	1	70	1/4 MEDIUM PRESSURE	FC 350A-4	GOVERNOR TO AIR DRYER UN-LOAD PORT
1408	4MP145	1	145	1/4 MEDIUM PRESSURE	FC 350A-4	GOVERNOR TO AIR TANK
1409	12T12	1	12	3/4 TEFLON	2807-12	DRYER TO COPPER TUBING
1410	12T88	1	88	3/4 TEFLON	2807-12	FROM AIR COMPRESSOR TO COPPER TUBING
1411	---------	2	21	2 1/2 BLUE SUCTION	2661-40	P-1, P-2
1412	---------	2	14	2 BLUE SUCTION	2661-32	P-3, P-4, P-5, P-6
1413	---------	1	70	1 BLUE SUCTION	2661-16	FROM FAR R/H HYDRAULIC TANK SUCTION TUBE TO P-7, A/C PUMP INLET. (USE JIC SWIVEL HOSE ENDS ON BOTH ENDS)
1414	---------	1	36	1 1/4 BLUE SUCTION	2661-20	FROM FAR L/H HYD TANK SUCTION TUBE TO FAR RIGHT HAND SUCTION TUBE. (USE JIC SWIVEL HOSE ENDS ON BOTH ENDS)
1415						
1416						
1417						
1418						
1419						
1420						

IMPLIED TOLERANCES

ALL DIMENSIONS ARE IN INCHES - TOLERANCE UNLESS OTHERWISE SPECIFIED

NOMINAL SIZE RANGE		INCH PLUS OR MINUS		NOMINAL SIZE RANGE		METRIC PLUS OR MINUS	
OVER	TO	2 PLACE DECIMAL	3 PLACE DECIMAL	OVER	TO	1 PLACE DECIMAL	2 PLACE DECIMAL
0	6	.03	.005	0	150	.8	.13
6	24	.04	.008	150	600	1.0	.20
24	-	.06	.010	-	600	1.5	.25

UNLESS OTHERWISE SPECIFIED ALL MACHINED SURFACES WILL HAVE;
A SURFACE FINISH OF 125 MICROINCHES
ANGULAR TOLERANCE OF ± .50°
CONCENTRICITY WITHIN .010

THIRD ANGLE PROJECTION

UNLESS OTHERWISE SPECIFIED ALL WELDS SHOULD ADHERE TO THE LATEST HTT WELDING SPECIFICATION 101

CHANGE	R/L	REVISION	DATE
EC501889	A	NEW RELEASE GMM	7-1-11
EC502954	B	ADDED IT-1110 BCB	2/15/12
EC503288	C	UPDATED FC211 TO GH663 & FC136 TO GH 493 HOSES GMM	3/23/12

Description: HOSE KIT

Drawing Number: ----------

Machine Type: MARK IV

Model: 5009363.dft

Drawn: kadams

Date Drawn: 7/1/11

Weight: ----------

Scale: -----

APVD Desg: BPA

APVD ChEng: BPA

Mat'l: ----------

HTT
Harsco Track Technologies
Harsco
Columbia, SC

Part Number: 5009363

Size: B

Sheet: 14 of 15

Plotted by gmancini on 3/23/2012 5009363.dft

CONFIDENTIAL

© COPYRIGHT 2001 HARSCO TRACK TECHNOLOGIES. THIS DRAWING OR DOCUMENT IS THE PROPERTY OF HARSCO TRACK TECHNOLOGIES AND EMBODIES CONFIDENTIAL INFORMATION, TRADE SECRET INFORMATION, AND/OR KNOW-HOW THAT IS THE PROPERTY OF HARSCO TRACK TECHNOLOGIES. BY ACCEPTING THIS DRAWING OR DOCUMENT, THE RECIPIENT AGREES (1) NOT TO PROVIDE, OR OTHERWISE MAKE AVAILABLE, THE DRAWING OR DOCUMENT, OR ANY INFORMATION OR KNOW-HOW EMBODIED THEREIN, TO ANY THIRD PARTY AND (2) NOT TO REPRODUCE OR USE THE DRAWING OR DOCUMENT TO MANUFACTURE ANY APPARATUS OR DEVICE, WITHOUT THE PRIOR WRITTEN AUTHORIZATION OF HARSCO TRACK TECHNOLOGIES.

SOLID EDGE DRAWING

ITEM	SIZE/TYPE/ LENGTH	QTY	LENGTH	DESCRIPTION	HOSE TYPE	WHERE IT GOES ON THE MACHINE
HYDRAULIC AIR CONDITIONER						
1500	8HP52	1	52	1/2 HIGH PRESSURE	GH 793-8	FROM A/C PUMP TO RELIEF VALVE
1501	8HP52	1	52	1/2 HIGH PRESSURE	GH 793-8	FROM A/C PRESSURE HARD LINE TO INSIDE HARD LINE AT CAB
1502	8HP65	1	65	1/2 HIGH PRESSURE	GH 793-8	FROM BOTTOM HARD LINE NEAR A/C TO OUTSIDE PORT ON A/C UNIT **HOSE ENDS: JIC SWIVEL X SHORT 90 JIC SW**
1503	8MP52	1	52	1/2 MEDIUM PRESSURE	GH 663-8	FROM A/C RETURN HARD LINE TO OUTSIDE HARD LINE AT CAB
1504	8MP66	1	66	1/2 MEDIUM PRESSURE	GH 663-8	FROM A/C RETURN HARD LINE TO TEE ON RELIEF VALVE ON TANK
1505	8MP65	1	65	1/2 HIGH PRESSURE	GH 793-8	FROM TOP HARD LINE NEAR A/C TO INSIDE PORT ON A/C UNIT **HOSE ENDS: JIC SWIVEL X SHORT 90 JIC SW**
1506	6MP96	1	96	3/8 MEDIUM PRESSURE	GH 663-6	FROM CASE DRAIN BULKHEAD ON A/C TO BULKHEAD IN REAR TRACTION VALVE MOUNTING PLATE
1507	12MP130	1	130	3/4 MEDIUM PRESSURE	GH 663-12	TANK PORT ON A/C RELIEF VALVE TO TEE ON RELIEF VALVE ON TOP HYD TANK
1508	8HP102	1	102	1/2 HIGH PRESSURE	GH 793-8	FROM A/C RELIEF VALVE TO HARDLINE ON RIGHT SIDE - TOP INSIDE HARDLINE
1509						
1510						
1511						
1512						
1513						
1514						
1515						
1516						
1517						
1518						
1519						
1520						

IMPLIED TOLERANCES

ALL DIMENSIONS ARE IN INCHES - TOLERANCE UNLESS OTHERWISE SPECIFIED

NOMINAL SIZE RANGE		INCH PLUS OR MINUS		NOMINAL SIZE RANGE		METRIC PLUS OR MINUS	
OVER	TO	2 PLACE DECIMAL	3 PLACE DECIMAL	OVER	TO	1 PLACE DECIMAL	2 PLACE DECIMAL
0	6	.03	.005	0	150	.8	.13
6	24	.04	.008	150	600	1.0	.20
24	-	.06	.010	-	600	1.5	.25

UNLESS OTHERWISE SPECIFIED ALL MACHINED SURFACES WILL HAVE;
A SURFACE FINISH OF 125 MICROINCHES
ANGULAR TOLERANCE OF ± .50°
CONCENTRICITY WITHIN .010

THIRD ANGLE PROJECTION

UNLESS OTHERWISE SPECIFIED ALL WELDS SHOULD ADHERE TO THE LATEST HTT WELDING SPECIFICATION 101

CHANGE	R/L	REVISION		DATE
EC501889	A	NEW RELEASE	GMM	7-1-11
EC502954	B	ADDED IT-1110	BCB	2/15/12
EC503288	C	UPDATED FC211 TO GH663 & FC136 TO GH 493 HOSES	GMM	3/23/12

Description: HOSE KIT

Drawing Number: ----------

Machine Type: MARK IV

Model: 5009363.dft

Drawn: kadams

Date Drawn: 7/1/11

Weight: ----------

Scale: -----

APVD Desg: BPA

APVD ChEng: BPA

Mat'l: ----------

HTT
Harsco Track Technologies
Harsco
Columbia, SC

Part Number: 5009363

Size: B

Sheet: 15 of 15

Plotted by gmancini on 3/23/2012 5009363.dft

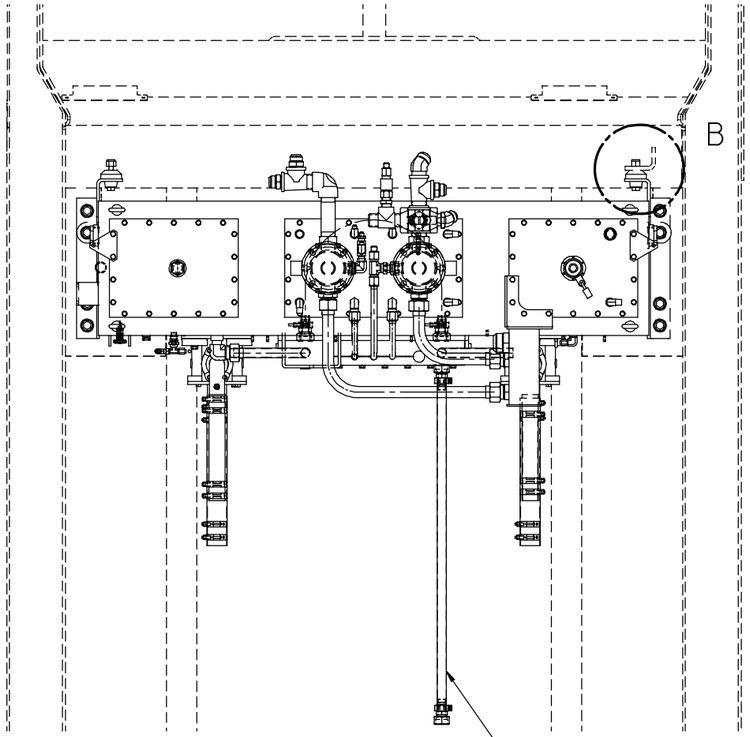

VIEW "E"

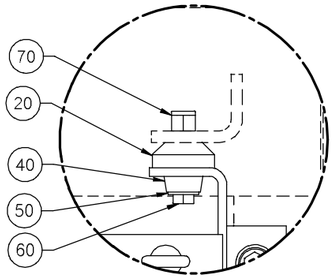

DETAIL B

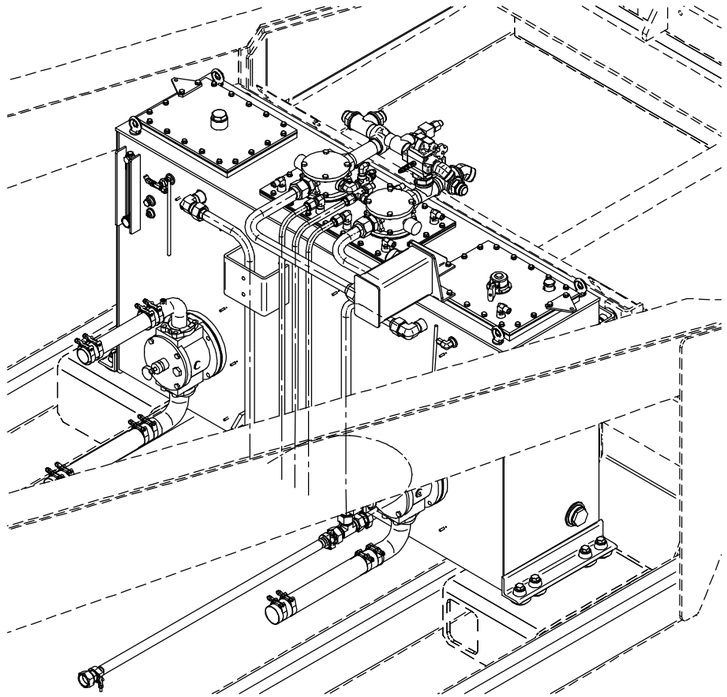

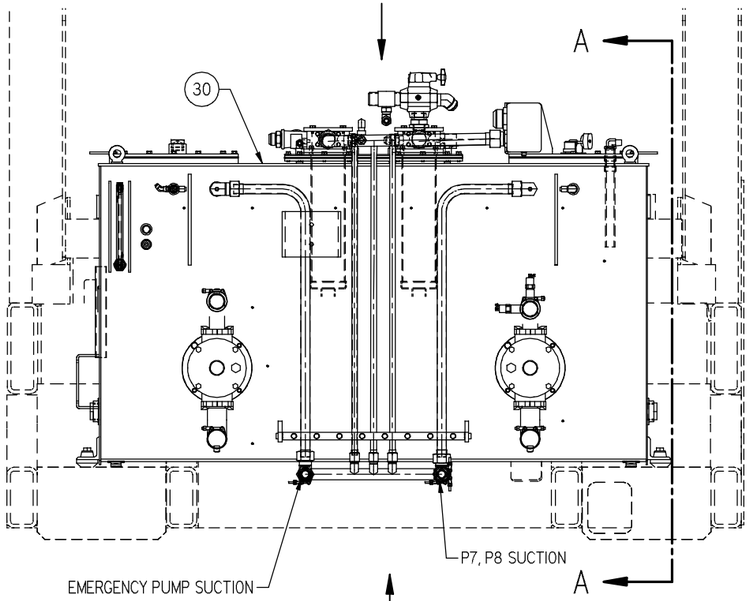

VIEW "D"

Item Number	Document Number	Title	Quantity
160	L425246	BAND CLAMP 2 1/2" DIA.	8
150	0-3304171-0-09	BAND CLAMP 2" DIA.	8
100	F012014	ELB90 12X12	2
90	0-3304119-0-13	3/4 X 1/2 X 90 DEG JIC ELBOW	1
80	0-3304015-0-13	FTG 1 1/4 JIC TEE	2
70	L40006	ESNA NUT 5/8-11	10
60	A0036184	5/8-11 X 3 1/2 HEX HD CAPSCREW	10
50	A0059007	5/8 FLAT WASHER	10
40	Z768730-001	LOWER SHOCK MOUNT	10
30	5004450	HYD TANK WLDT & ASSY	1
20	Z768731-001	UPPER SHOCK MOUNT	10

Inch
[mm]

CONFIDENTIAL
© COPYRIGHT 2010 HARSCO. THIS DRAWING OR DOCUMENT IS THE PROPERTY OF HARSCO AND EMBODIES CONFIDENTIAL INFORMATION, TRADE SECRET INFORMATION, AND/OR KNOW-HOW THAT IS THE PROPERTY OF HARSCO. BY ACCEPTING THIS DRAWING OR DOCUMENT, THE RECIPIENT AGREES (1) NOT TO PROVIDE, OR OTHERWISE MAKE AVAILABLE, THE DRAWING OR DOCUMENT, OR ANY INFORMATION OR KNOW-HOW EMBODIED THEREIN, TO ANY THIRD PARTY AND (2) NOT TO REPRODUCE OR USE THE DRAWING OR DOCUMENT TO MANUFACTURE ANY APPARATUS OR DEVICE, WITHOUT THE PRIOR WRITTEN AUTHORIZATION OF HARSCO.

NOMINAL SIZE RANGE OVER	TO	INCH PLUS OR MINUS 2 PLACE DECIMAL	3 PLACE DECIMAL
0	6	.03	.005
6	24	.04	.008
24	-	.06	.010

NOMINAL SIZE RANGE OVER	TO	METRIC PLUS OR MINUS 1 PLACE DECIMAL	2 PLACE DECIMAL
0	150	.5	.13
150	600	1.0	.20
600	-	1.5	.25

UNLESS OTHERWISE SPECIFIED ALL MACHINED SURFACES WILL HAVE:
A SURFACE FINISH OF 125 MICROINCHES
ANGULAR TOLERANCE OF ± .87
CONCENTRICITY WITHIN .010

THIRD ANGLE PROJECTION

UNLESS OTHERWISE SPECIFIED, ALL WELDS SHOULD ADHERE TO THE MOST CURRENT A.W.S WELDING STANDARDS

CHANGE	R/L	REVISION	DR	DATE
500345	A	NEW RELEASE	JRD	1-11-11

Description: HYD TANK INSTL

HARSCO RAIL

Material

Machine Type: MARK IV

Size: D

Weight

Drawn: jduehlmeyer

Date Drawn: 1/11/2011

Part Number: 5004588

Sheet: 1 of 2

SOLID EDGE DRAWING

DO NOT SCALE

Plotted by jduehlmeyer on 1/11/2011 5004588.dft

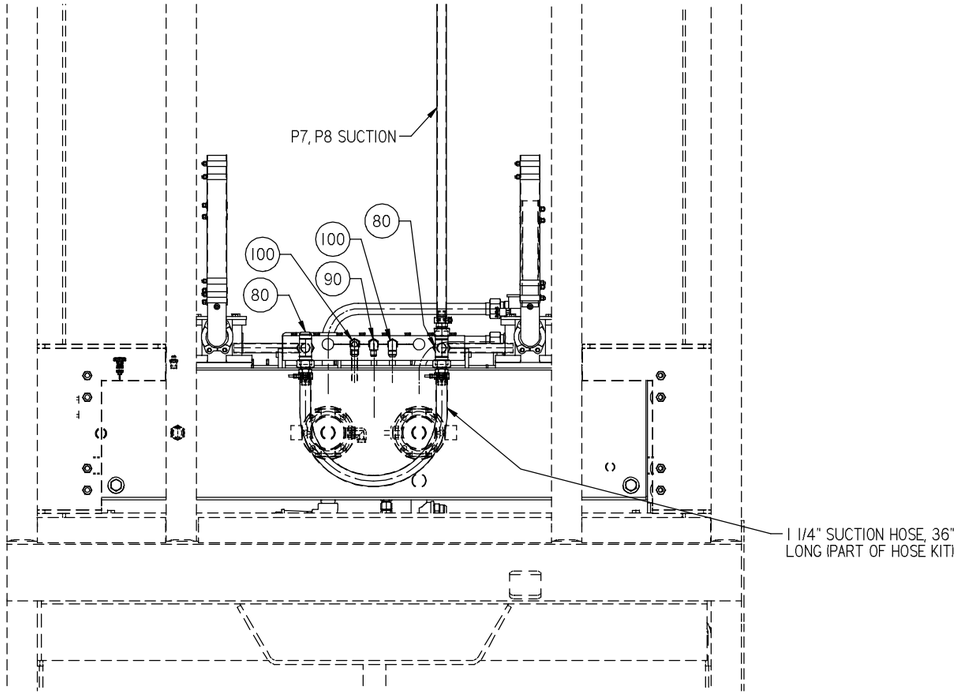

VIEW "D"

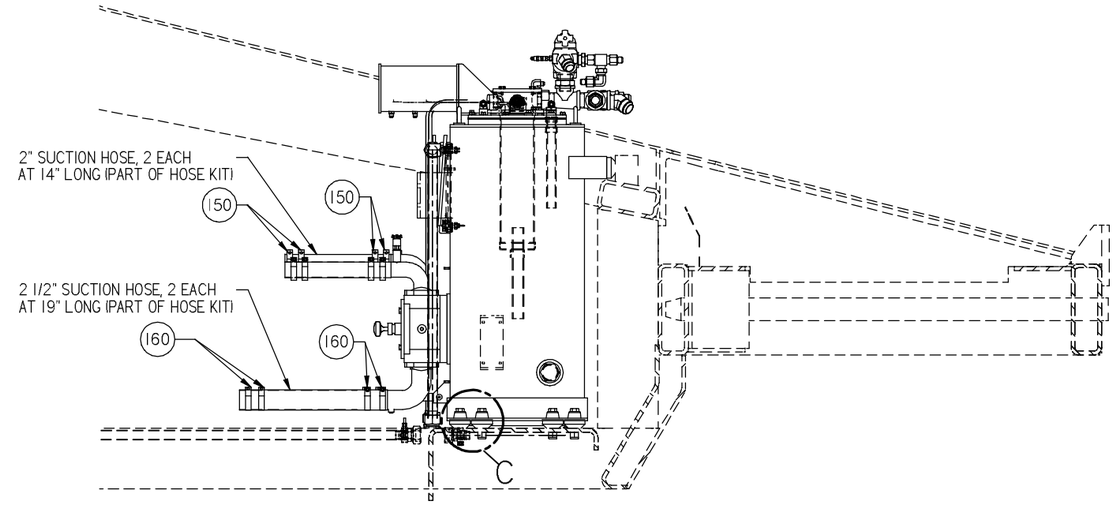

SECTION A-A

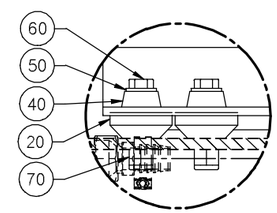

DETAIL C

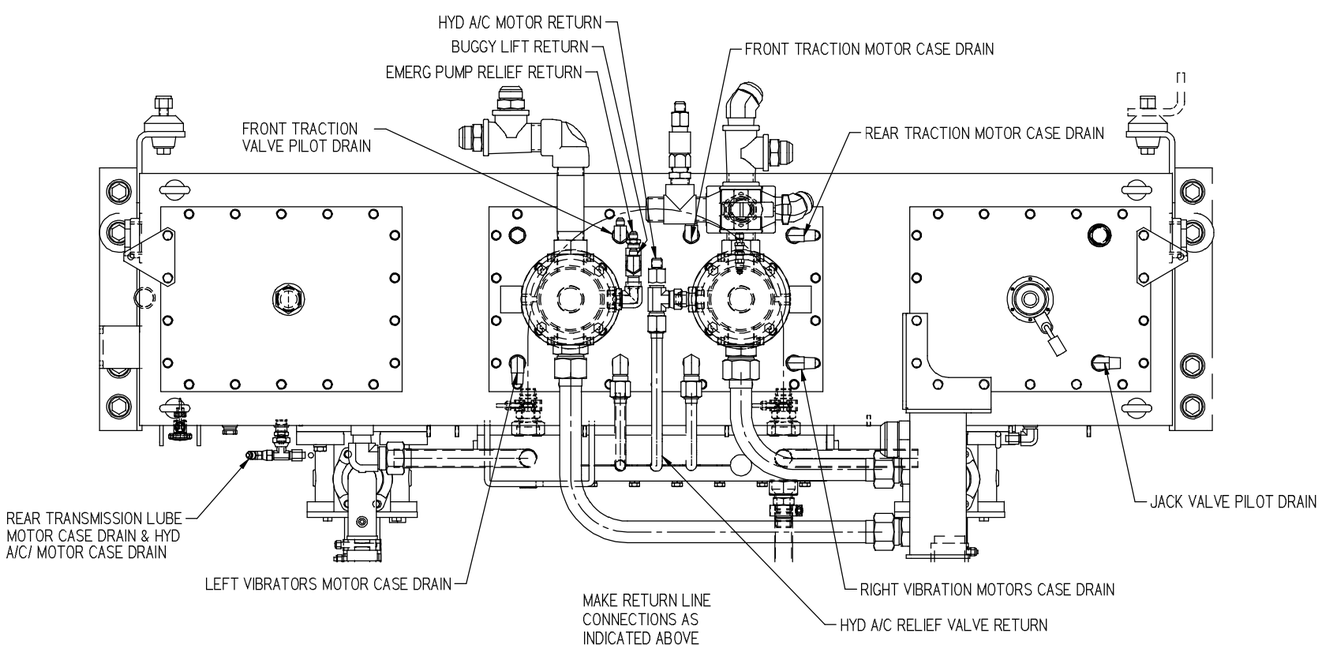

VIEW "E"
ENLARGED

Inch
[mm]

CONFIDENTIAL
© COPYRIGHT 2010 HARSCO. THIS DRAWING OR DOCUMENT IS THE PROPERTY OF HARSCO AND EMBODIES CONFIDENTIAL INFORMATION, TRADE SECRET INFORMATION, AND/OR KNOW-HOW THAT IS THE PROPERTY OF HARSCO. BY ACCEPTING THIS DRAWING OR DOCUMENT, THE RECIPIENT AGREES (1) NOT TO PROVIDE, OR OTHERWISE MAKE AVAILABLE, THE DRAWING OR DOCUMENT, OR ANY INFORMATION OR KNOW-HOW EMBODIED THEREIN, TO ANY THIRD PARTY AND (2) NOT TO REPRODUCE OR USE THE DRAWING OR DOCUMENT TO MANUFACTURE ANY APPARATUS OR DEVICE, WITHOUT THE PRIOR WRITTEN AUTHORIZATION OF HARSCO.

NOMINAL SIZE RANGE		INCH PLUS OR MINUS		NOMINAL SIZE RANGE		METRIC PLUS OR MINUS	
OVER	TO	2 PLACE DECIMAL	3 PLACE DECIMAL	OVER	TO	1 PLACE DECIMAL	2 PLACE DECIMAL
0	6	.03	.005	0	150	.5	.13
6	24	.04	.008	150	600	1.0	.20
24	-	.06	.010	600	-	1.5	.25

UNLESS OTHERWISE SPECIFIED ALL MACHINED SURFACES WILL HAVE:
A SURFACE FINISH OF 125 MICRONCHES
ANGULAR TOLERANCE OF +- .87
CONCENTRICITY WITHIN .010

THIRD ANGLE PROJECTION

UNLESS OTHERWISE SPECIFIED, ALL WELDS SHOULD ADHERE TO THE MOST CURRENT A.W.S WELDING STANDARDS

CHANGE	R/L	REVISION	DR	DATE
500345	A	NEW RELEASE	JRD	1-11-11

Description: HYD TANK INSTL

HARSCO RAIL

Material

Machine Type: MARK IV

Size: D

Weight

Drawn: jduehlmeyer

Date Drawn: 1/11/2011

Part Number: 5004588

Sheet: 2 of 2

SOLID EDGE DRAWING

DO NOT SCALE

Plotted by jduehlmeyer on 1/11/2011 5004588.dft

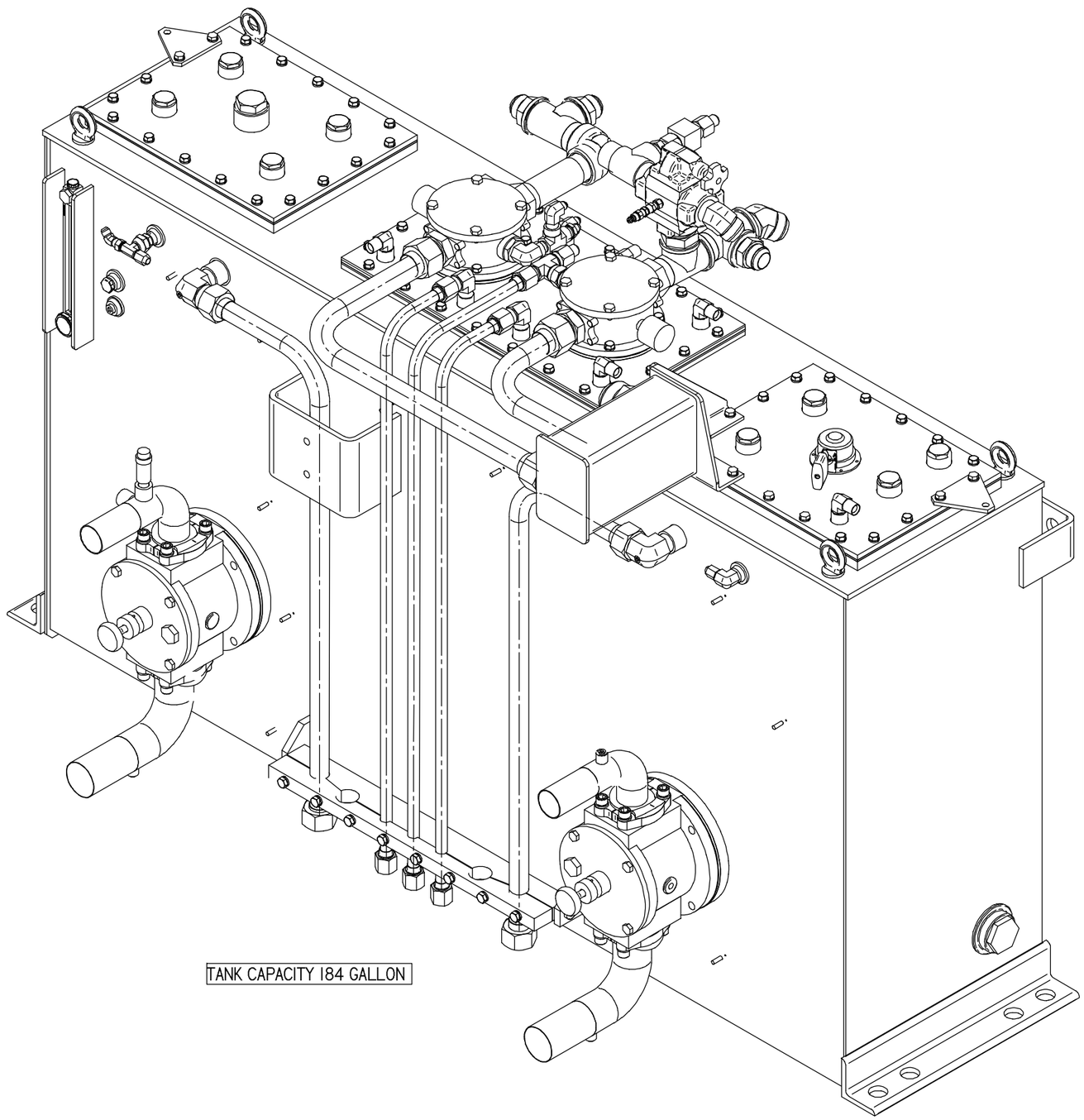

ITEM	PART NO	QTY	DESCRIPTION
620	0-3304121-0-12	4	TUBE SLEEVE
630	0-3304013-0-41	1	1 1/4-3/4 JIC ADAPTOR USE
640	L423023	1	ADAPT -12JICX90SW USE F013990
650	0-3304105-0-19	1	HEX PIPE NIPPLE
660	0-3305018-0-02	4	HYD TBG 3/8 OD X .049W
670	0-3304057-0-02	1	37/FLARE TUBE 90 DEG SW USE
680	L420599	1	ADAPTOR 45 DEG JIC/MP
690	L420717	3	ADAPT. -8MPX-6JIC90 USE
700	0-3304121-0-08	6	3/4 JIC TUBE SLEEVE
710	L40051	1	90 DEG FMP/MP USE F013468
720	Z767067-002	2	PORTED 90' FITTING
730	L40056	1	TEE SERVICE USE F010692
740	L411380	2	ADAPT. MP/JIC USE F015959
750	0-3304057-0-10	1	37/FLARE TUBE 90 DEG SW USE
760	0-3304057-0-08	1	37/FLARE TUBE 90 DEG SW USE
790	0-3304180-0-03	1	ELBOW 45 DEG SW NUT USE
800	0-3304120-0-05	2	NUT
810	0-3304121-0-05	2	SLEEVE F017917
820	0-3304120-0-08	6	3/4 JIC TUBE NUT
830	0-3304118-0-11	5	EXTERNAL PIPE PLUG USE F010989
860	D4437X01	1	TUBE CLAMP
870	A0064017	2	1/2D X5/8 H/SOC SHLD SCR
880	A0036070	8	3/8-16 X 2 1/2 HH CAPSCREW
900	0-3304142-0-07	4	SPLIT FLANGE MOUNTING KIT
910	L41415	2	REDUCING BUSHING
950	0-3351002-0-01	2	SUCTION STRAINER
970	0-3380000-0-03	2	FLOW DIFFUSER 2.5"
980	0-3304028-0-22	1	O-RING BOSS/37 DEG. FLAR USE
990	Z753146-082	2	THREADED PIPE 1" NPT
1000	L40099	2	ELBOW
1030	L40034	2	NIPPLE CLOSE
1060	L424277	2	2" HEX HD PIPE PLUG (ON TOP)
1070	L423277	1	SOC HD PIPE PLUG
1080	F023004	1	ADAPTER
1110	G8299Y01	2	3 HOLE CLAMP BRACKET
1120	H5133WAT	1	M12 TEMP SENDER CABLE ASSY

ITEM	PART NO	QTY	DESCRIPTION
10	5008774	1	TANK FILLER PLATE ASSY
20	5008775	1	TANK FILL COVER WELDT
30	D4185WAA	1	RETURN COVER WLDT
40	4001209	1	HYD TANK MANIFOLD WLDT
50	A2391YAD	1	90 DEGREE HOSE STEM W/SAE FLG
60	A2391YAB	2	90 DEGREE HOSE STEM W/SAE FLG
70	A2391YAG	1	90 DEG HOSE STEM W/SAE FLG
100	0-3305018-0-05	17	HYD TBG 3/4 OD X .095W
130	0-1404519-0-01	1	OIL TANK GASKET US TRUSS
200	D4649Y01	2	TANK FLANGE GASKET
240	L424328	3	SERVICE TEE
320	0-3381006-0-03	1	FLUID LEVEL GAUGE
330	D4176Y01	2	SUCTION SEPERATOR
340	0-3381010-0-11	1	FILLER/BREATHER-FILTER
350	L424336	3	FITTING USE F016330
360	701012100	8	HEX HD PLUG
370	L425144	1	PADLOCK
380	C9249Y05	2	IN TANK RETURN FILTER
390	L41189	1	ELBOW USE F003179
400	Z753146-148	1	PIPE
410	L424632	1	HIGH PRESS CARRYOVERPL USE
420	0-3304009-0-03	2	ADAPTER
430	L423785	2	FITTING USE F010584
440	C8864Y01	1	ADAPTER USE F024731
450	L420651	1	JIC/STRAIGHT THREAD BOSS USE
460	0-3304098-0-22	1	MP-JIC 45 DEG ADPT
470	L423640	2	1 1/2 JIC/STR THD BOSS
480	L410817	2	PLUG, DRYSEAL THD PRESSU USE
490	L40672	2	PLUG SQ. HEAD
500	L420004	5	PIPE JICMALE 90DEG USE F012054
510	A0061010	70	3/8 MED LOK WSHR USE F001025
520	A0036063	56	3/8-16 X 1 HEX HEAD CAPSCREW
530	A0036124	2	1/2-13 X1 1/2 HHCS USE F001090
550	A0061013	2	1/2 MED LOK WSHR
560	A0036065	10	3/8-16 X 1 1/4 HH CAPSCREW
570	0-3334011-0-06	1	REL. VALVE, BAL. PISTON
580	0-3304004-0-14	1	TEE ADPT - MP/FP/JIC
590	0-3304120-0-11	4	JIC TUBE NUT
600	0-3304132-0-06	3	REDUCER USE F040392
610	L41228	1	PLUG, QUICK COUPLING

Inch [mm]

CONFIDENTIAL
© COPYRIGHT 2010 HARSCO. THIS DRAWING OR DOCUMENT IS THE PROPERTY OF HARSCO AND EMBODIES CONFIDENTIAL INFORMATION, TRADE SECRET INFORMATION, AND/OR KNOW-HOW THAT IS THE PROPERTY OF HARSCO. BY ACCEPTING THIS DRAWING OR DOCUMENT, THE RECIPIENT AGREES (1) NOT TO PROVIDE, OR OTHERWISE MAKE AVAILABLE, THE DRAWING OR DOCUMENT, OR ANY INFORMATION OR KNOW-HOW EMBODIED THEREIN, TO ANY THIRD PARTY AND (2) NOT TO REPRODUCE OR USE THE DRAWING OR DOCUMENT TO MANUFACTURE ANY APPARATUS OR DEVICE, WITHOUT THE PRIOR WRITTEN AUTHORIZATION OF HARSCO.

NOMINAL SIZE RANGE OVER	TO	INCH PLUS OR MINUS 3 PLACE DECIMAL	3 PLACE DECIMAL
0	6	.03	.005
6	24	.04	.008
24	-	.06	.010

NOMINAL SIZE RANGE OVER	TO	METRIC PLUS OR MINUS 1 PLACE DECIMAL	2 PLACE DECIMAL
0	150	.8	.13
150	600	1.0	.20
600	-	1.5	.25

UNLESS OTHERWISE SPECIFIED ALL MACHINED SURFACES WILL HAVE:
A SURFACE FINISH OF 125 MICRONCHES
ANGULAR TOLERANCE OF ± .67
CONCENTRICITY WITHIN .010

THIRD ANGLE PROJECTION

UNLESS OTHERWISE SPECIFIED, ALL WELDS SHOULD ADHERE TO THE MOST CURRENT AWS WELDING STANDARDS

CHANGE	R/L	REVISION	DR	DATE
EC500345	A	NEW RELEASE	JRD	1-11-11
EC500942	B	REMOVED ITEMS 770, 780 AND 940, ADDED ITEM 1120	JRD	4-21-11
EC501311	C	ITEM10 WAS G4164WAA & ITEM20 WAS G4164WAB	BP	6-8-11

Description: HYD TANK WLDT & ASSY

HARSCO RAIL

Material:

Machine Type: MARK IV

Weight:

Drawn: jduehlmeyer

Date Drawn: 6/8/2011

SOLID EDGE DRAWING

DO NOT SCALE

Part Number: 5004450

Size: D

Sheet: 1 of 5

Plotted by bpayyadakkath on 6/15/2011 5004450.dft

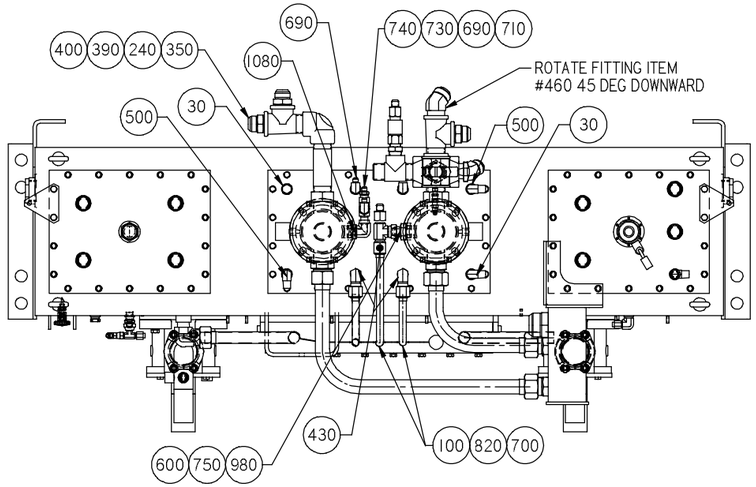

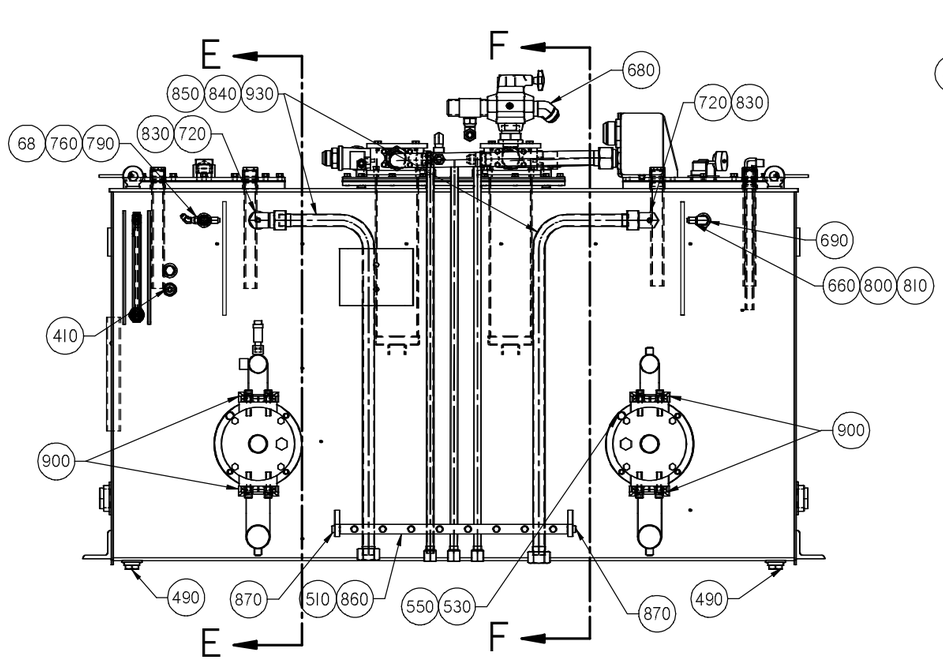

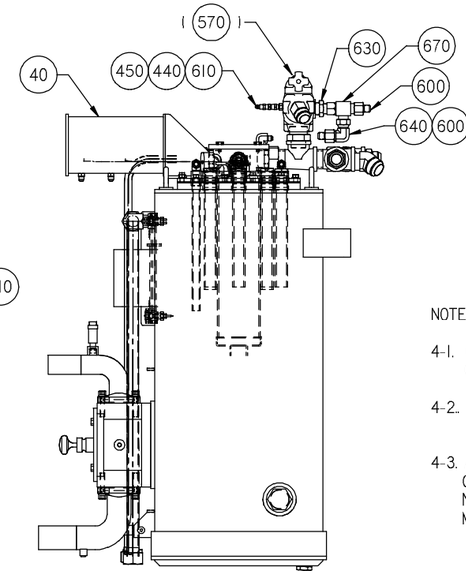

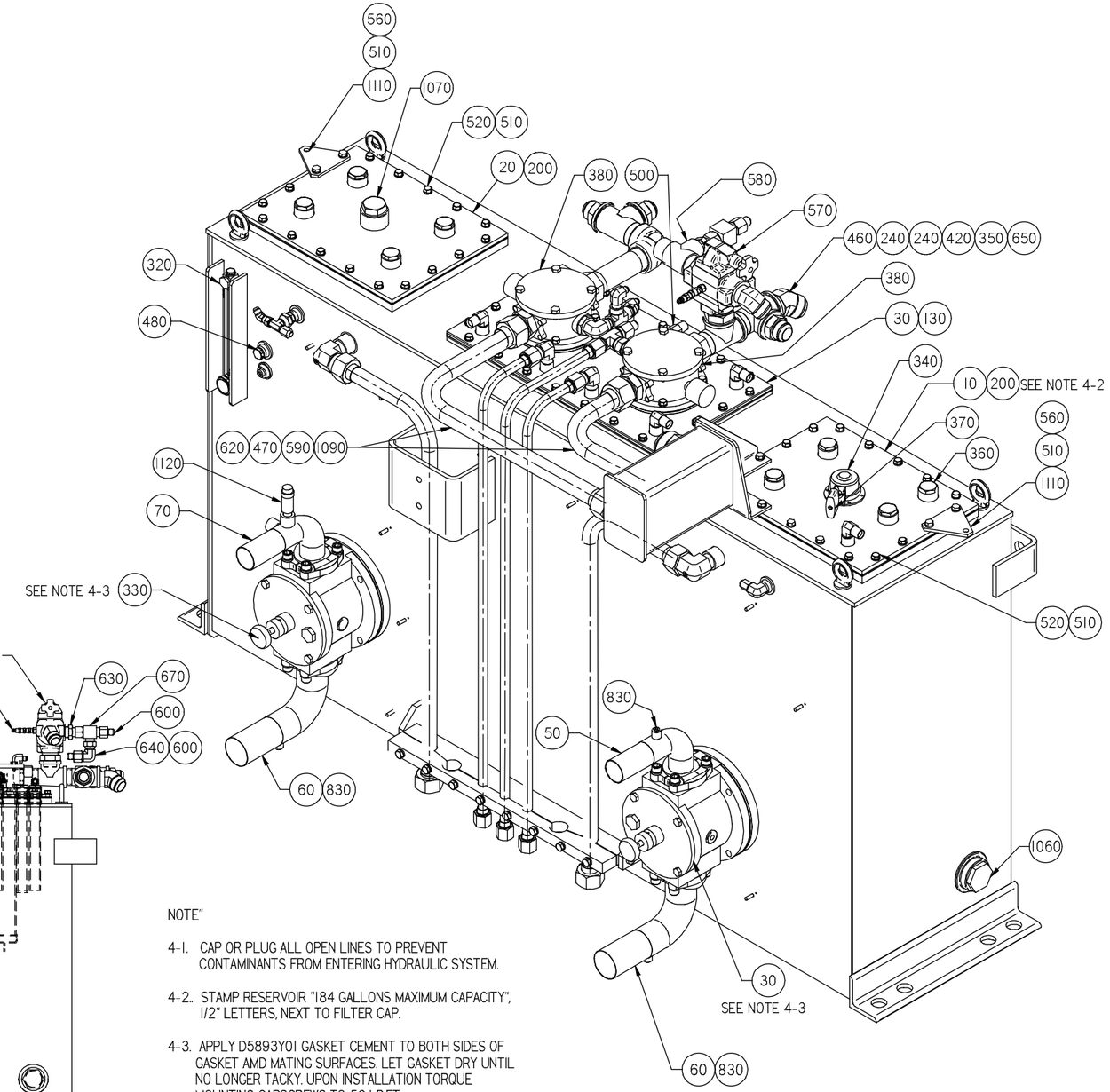

NOTE"

4-1. CAP OR PLUG ALL OPEN LINES TO PREVENT CONTAMINANTS FROM ENTERING HYDRAULIC SYSTEM.

4-2. STAMP RESERVOIR "184 GALLONS MAXIMUM CAPACITY", 1/2" LETTERS, NEXT TO FILTER CAP.

4-3. APPLY D5893Y01 GASKET CEMENT TO BOTH SIDES OF GASKET AMD MATING SURFACES. LET GASKET DRY UNTIL NO LONGER TACKY. UPON INSTALLATION TORQUE MOUNTING CAPSCREWS TO 50 LB.FT.

Inch
[mm]

CONFIDENTIAL
© COPYRIGHT 2010 HARSCO. THIS DRAWING OR DOCUMENT IS THE PROPERTY OF HARSCO AND EMBODIES CONFIDENTIAL INFORMATION, TRADE SECRET INFORMATION, AND/OR KNOW-HOW THAT IS THE PROPERTY OF HARSCO. BY ACCEPTING THIS DRAWING OR DOCUMENT, THE RECIPIENT AGREES (1) NOT TO PROVIDE, OR OTHERWISE MAKE AVAILABLE, THE DRAWING OR DOCUMENT, OR ANY INFORMATION OR KNOW-HOW EMBODIED THEREIN, TO ANY THIRD PARTY AND (2) NOT TO REPRODUCE OR USE THE DRAWING OR DOCUMENT TO MANUFACTURE ANY APPARATUS OR DEVICE, WITHOUT THE PRIOR WRITTEN AUTHORIZATION OF HARSCO.

NOMINAL SIZE RANGE OVER	TO	INCH PLUS OR MINUS 2 PLACE DECIMAL	3 PLACE DECIMAL	NOMINAL SIZE RANGE OVER	TO	METRIC PLUS OR MINUS 1 PLACE DECIMAL	2 PLACE DECIMAL
0	6	.03	.005	0	150	.5	.13
6	24	.04	.008	150	600	1.0	.20
24	-	.06	.010	600	-	1.5	.25

UNLESS OTHERWISE SPECIFIED ALL MACHINED SURFACES WILL HAVE; A SURFACE FINISH OF 125 MICRONCHES ANGULAR TOLERANCE OF ± .67 CONCENTRICITY WITHIN .010

THIRD ANGLE PROJECTION

UNLESS OTHERWISE SPECIFIED, ALL WELDS SHOULD ADHERE TO THE MOST CURRENT A.W.S WELDING STANDARDS

CHANGE	R/L	REVISION	DR	DATE
EC500345	A	NEW RELEASE	JRD	1-11-11
EC500942	B	REMOVED ITEMS 770, 780 AND 940, ADDED ITEM 1120	JRD	4-21-11
EC501311	C	ITEM10 WAS G4164WAA & ITEM20 WAS G4164WAB	BP	6-8-11

Description: HYD TANK WLDT & ASSY

HARSCO RAIL

Material | Machine Type: MARK IV | Size: D

Weight | Drawn: jduehlmeyer | Date Drawn: 6/8/2011 | Part Number: 5004450 | Sheet 4 of 5

SOLID EDGE DRAWING | DO NOT SCALE

Plotted by bpayyadakkath on 6/15/2011 5004450.dft

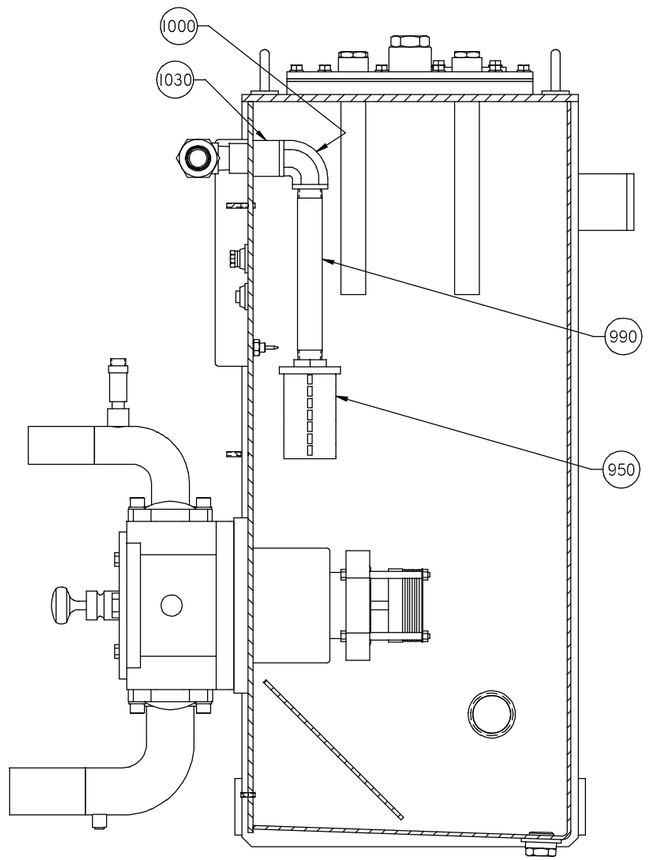

SECTION E-E

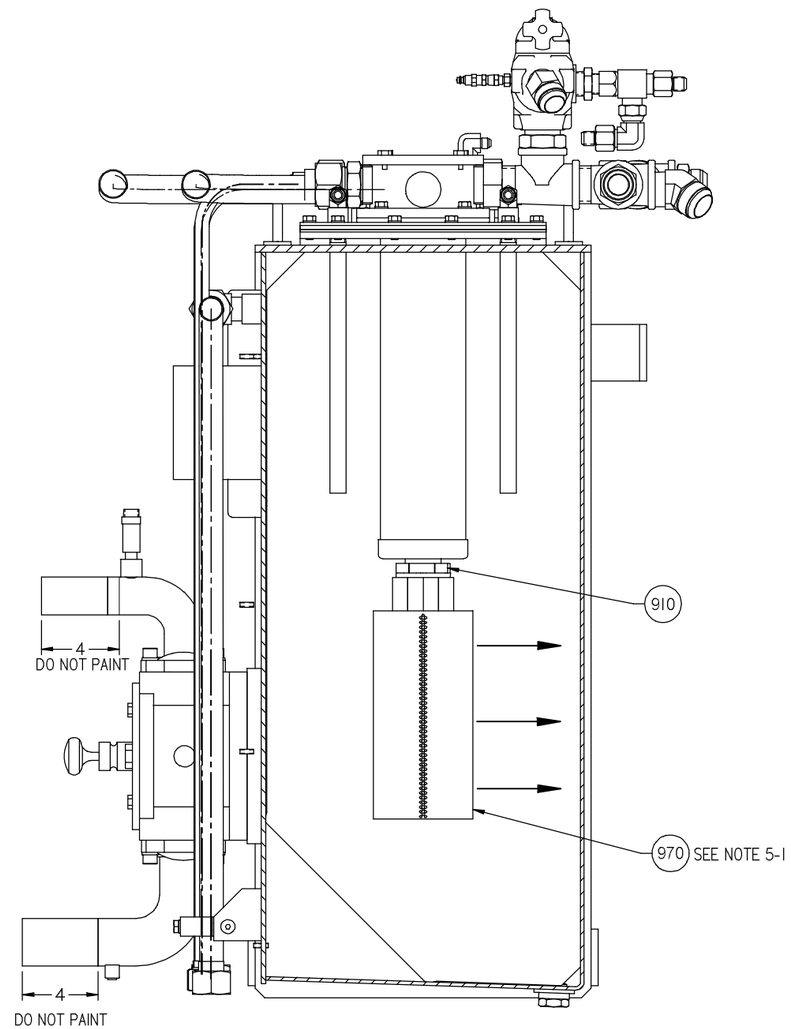

SECTION F-F

NOTE:

5-1. PERFORATED SIDE OF FLOW DIFFUSERS ARE TO BE DIRECTED TOWARD FRONT TANK WALL (AS SHOWN).

Inch
[mm]

CONFIDENTIAL
© COPYRIGHT 2010 HARSCO. THIS DRAWING OR DOCUMENT IS THE PROPERTY OF HARSCO AND EMBODIES CONFIDENTIAL INFORMATION, TRADE SECRET INFORMATION, AND/OR KNOW-HOW THAT IS THE PROPERTY OF HARSCO. BY ACCEPTING THIS DRAWING OR DOCUMENT, THE RECIPIENT AGREES (1) NOT TO PROVIDE, OR OTHERWISE MAKE AVAILABLE, THE DRAWING OR DOCUMENT, OR ANY INFORMATION OR KNOW-HOW EMBODIED THEREIN, TO ANY THIRD PARTY AND (2) NOT TO REPRODUCE OR USE THE DRAWING OR DOCUMENT TO MANUFACTURE ANY APPARATUS OR DEVICE, WITHOUT THE PRIOR WRITTEN AUTHORIZATION OF HARSCO.

NOMINAL SIZE RANGE		INCH PLUS OR MINUS	
OVER	TO	2 PLACE DECIMAL	3 PLACE DECIMAL
0	6	.03	.005
6	24	.04	.008
24	-	.06	.010

NOMINAL SIZE RANGE		METRIC PLUS OR MINUS	
OVER	TO	1 PLACE DECIMAL	2 PLACE DECIMAL
0	150	.5	.13
150	600	1.0	.20
600	-	1.5	.25

UNLESS OTHERWISE SPECIFIED ALL MACHINED SURFACES WILL HAVE:
A SURFACE FINISH OF 125 MICROINCHES
ANGULAR TOLERANCE OF +- .50°
CONCENTRICITY WITHIN .010

THIRD ANGLE PROJECTION

UNLESS OTHERWISE SPECIFIED, ALL WELDS SHOULD ADHERE TO THE MOST CURRENT AWS WELDING STANDARDS

CHANGE	R/L	REVISION	DR	DATE
EC500345	A	NEW RELEASE	JRD	1-11-11
EC500942	B	REMOVED ITEMS 770, 780 AND 940, ADDED ITEM 1120	JRD	4-21-11
EC501311	C	ITEM10 WAS G4164WAA & ITEM20 WAS G4164WAB	BP	6-8-11

Description: HYD TANK WLDT & ASSY

HARSCO RAIL

Material

Machine Type: MARK IV

Size: D

Weight

Drawn: jduehlmeyer

Date Drawn: 6/8/2011

Part Number: 5004450

Sheet: 5 of 5

SOLID EDGE DRAWING

DO NOT SCALE

Plotted by bpayyadakkath on 6/15/2011 5004450.dft

BILL OF MATERIAL

	ITEM	PART #	QTY	PART DESCRIPTION	
	1	0-3316003-0-04	1	EMERGENCY PUMP	: EMERGENCY PUMP MOTOR
	2	0-3316003-0-05	1	PLATE	: BASE PLATE
E	3	F001113	2	SCREW	: 5/16-18X1 1/4 HEX HEAD CAP SCREW GR5 ZP
E	4	F009546	2	WASHER	: SAE RGLR LOCK WASHER 5/16 ZP
E	5	F018615	2	WASHER	: FLAT WASHER .34ID, .69OD, .08 THICK
	6	L40388	2	LOCK NUT	: LOCK NUT, 5/16-18
E	7	F013685	1	MALE ELBOW, 90DEG	: 1/4NPT X 90 DEGREE
E	8	164869	1	VALVE	: 3 PSI, CHECK VALVE, -16
E	9	F010994	1	ADAPTER	: FTG 1/4MP - 3/8 JIC
	10	L411363	2	SWIVEL	: 3/8" HP HOSE END
	11	L411007	8	HOSE	: HP HOSE 3/8"
	12	L411364	4	FITTING	: HOSE END 3/8" JIC
	13	L411844	12	HOSE	: HOSE 3/8" M/P (FT)
	14	L422167	1	ADAPTER	: 1/2" NPTF X 1/2 JIC 90 DEG
E	15	F040305	1	REDUCER	: 1/2 X 3/8 JIC REDUCER
	16	L424528	2	ADAPTER	: ADAPTER 3/8 FP - JIC
E	17	F024039	2	REDUCER	: REDUCER, 3/8" MP - 1/8 FP
F	18	C8568Y01	1	ELECTRICAL BOX	: ELECTRICAL BOX REWORK
F	19	A0655Y01	1	SWITCH, PUSHBUTTON	: MOMENTARY SQUARE PB, RED
	20	A0653Y01	1	CONTACT BLOCK	: 2 N.O. CONTACT BLOCK
	21	C8578Y01	1	COVER	: PLATE FOR SWITCH BOX
	22	A1230Y17	1	CABLE GRIP	: CABLE FROM: 0.300 - 0.400 3/4" NPT
E	23	F001213	2	SCREW	: 1/4-20 X 1 1/4 HEX HEAD CAP SCREW GR5 ZP
	24	A0061008	2	WASHER	: 1/4" LOCK WASHER
	25	A0055009	2	NUT	: 1/4-20 HEX NUT
	26	A6417YAA	1	BATTERY CABLE ASSY	: BATTERY CABLE ASSEMBLY
E	27	F012388	10FT	CABLE, MULTICONDUCTOR	: 16AWG/2 CONDUCTOR, .405 O.D. 13A/CONDUCTOR
	28	L422501	1	TERMINAL LUG	: 10 HOLE SIZE, 14-16 AWG WIRE
	29			DELETE	
	30	C9146V01	REF	HYDRAULIC SCHEMATIC	: HYDRAULIC SCHEMATIC
E	31			DELETE	
	32	A1920Y20	1	DECAL, INSERT	: EMERGENCY PUMP FILM INSERT
	33	D2435W02	1	COVER	: EMERGENCY PUMP COVER
	34	0-3304132-0-07	1	REDUCER	: 1"-3/8" JIC SWL REDUCER
E	35	F009826	2	SCREW	: 5/16-18 X 1/2 HHD CAP SCREW
E	36	F022949	1	REDUCER	: 1 1/4 - 1" SWL REDUCER
E	37	F012055	1	ELBOW, MALE	: FTG. 3/8 MP - JIC 90DEG
	38	A0036065	4	SCREW	: 3/8-16 X 1 1/4 HH CAP SCREW
	39	A0059003	8	WASHER	: FLAT WASHER 3/8"
	40	L40387	4	LOCK NUT	: LOCKNUT, 3/8-16

CONFIDENTIAL

©COPYRIGHT 2011 HARSCO. THIS DRAWING OR DOCUMENT IS THE PROPERTY OF HARSCO AND EMBODIES CONFIDENTIAL INFORMATION, TRADE SECRET INFORMATION, AND/OR KNOW-HOW THAT IS THE PROPERTY OF HARSCO. BY ACCEPTING THIS DRAWING OR DOCUMENT, THE RECIPIENT AGREES (1) NOT TO PROVIDE, OR OTHERWISE MAKE AVAILABLE, THE DRAWING OR DOCUMENT, OR ANY INFORMATION OR KNOW-HOW EMBODIED THEREIN, TO ANY THIRD PARTY AND (2) NOT TO REPRODUCE OR USE THE DRAWING OR DOCUMENT TO MANUFACTURE ANY APPARATUS OR DEVICE, WITHOUT THE PRIOR WRITTEN AUTHORIZATION OF HARSCO.

CHANGE #		REVISION	DR	DATE
12509.33	D			01/95 TRIPPE
105640	E		DWJ	05/10
EC502549	F	ITEMS 18 & 19 QTY 2 TO 1, ROTATED ALL VIEWS	CJW	12/14/11

DRAWING TITLE/DESCRIPTION: EMERGENCY PUMP KIT

MACHINE TYPE-MODEL: MARK IV

E3 PROJECT FILE NAME: C8563WAB

SHEET NUMBER 1

NUMBER OF JUPITER SHEETS 0

TOTAL NUMBER OF SHEETS 2

DRAWN BY: DWJ

REL. DATE:

SIZE: D

SCALE:

HARSCO RAIL

E3 DRAWING

C8563WAB

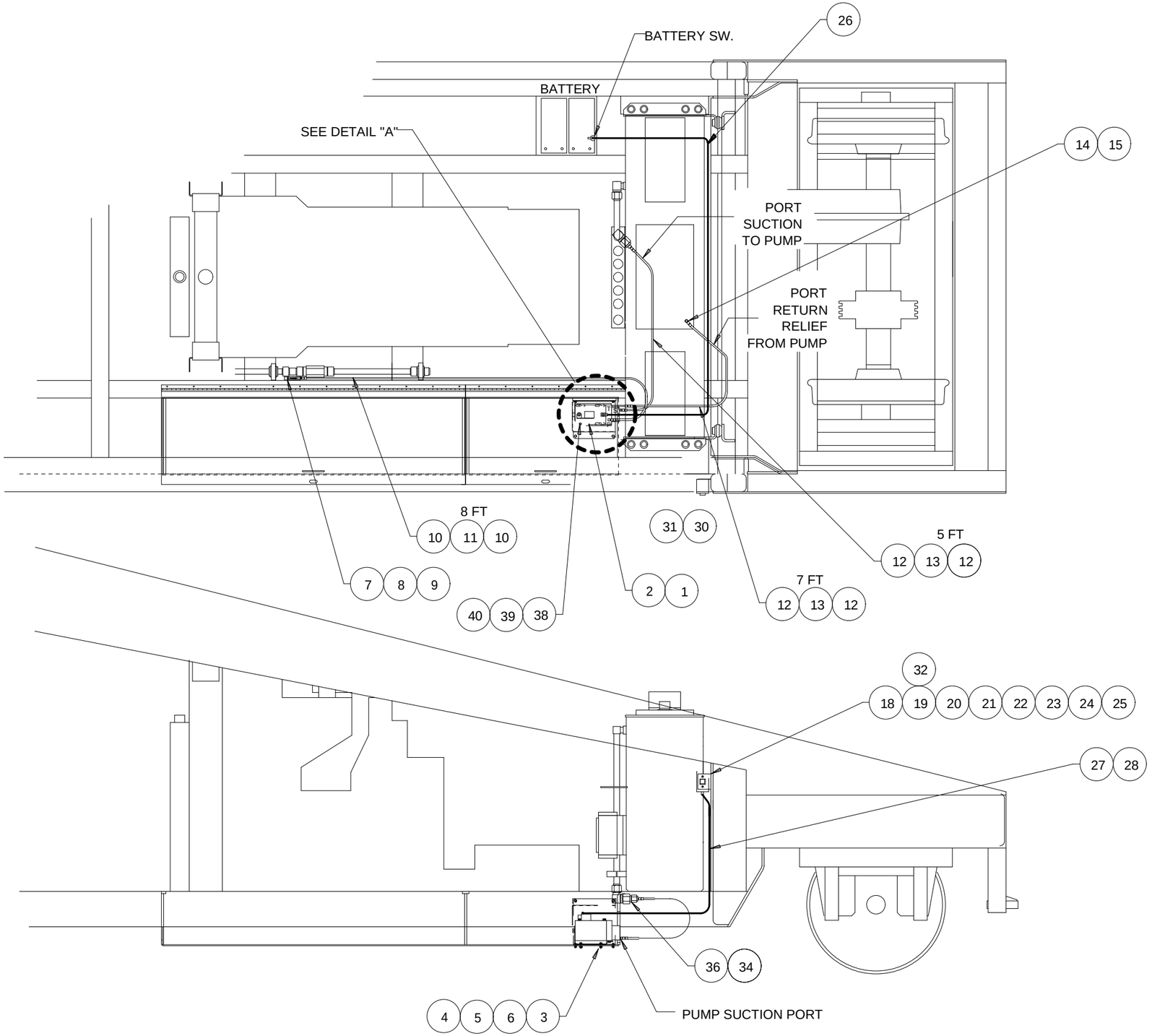

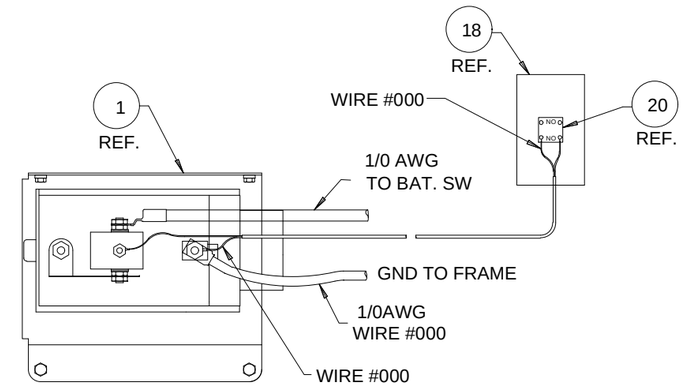

WIRING DIAGRAM FOR ELEC. EMERG. PUMP

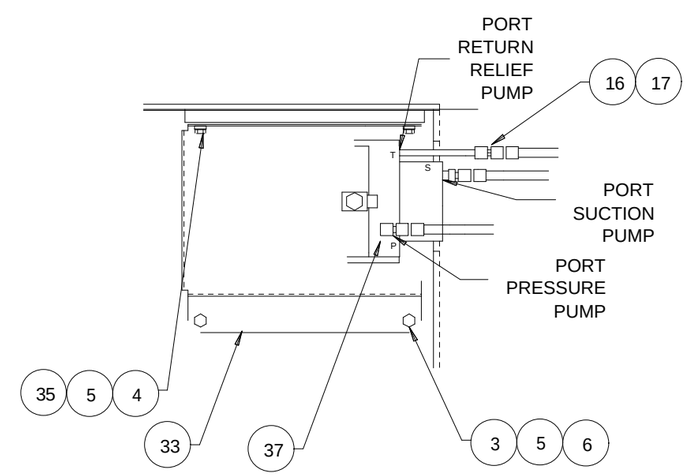

DETAIL "A"

CONFIDENTIAL

©COPYRIGHT 2011 HARSCO. THIS DRAWING OR DOCUMENT IS THE PROPERTY OF HARSCO AND EMBODIES CONFIDENTIAL INFORMATION, TRADE SECRET INFORMATION, AND/OR KNOW-HOW THAT IS THE PROPERTY OF HARSCO. BY ACCEPTING THIS DRAWING OR DOCUMENT, THE RECIPIENT AGREES (1) NOT TO PROVIDE, OR OTHERWISE MAKE AVAILABLE, THE DRAWING OR DOCUMENT, OR ANY INFORMATION OR KNOW-HOW EMBODIED THEREIN, TO ANY THIRD PARTY AND (2) NOT TO REPRODUCE OR USE THE DRAWING OR DOCUMENT TO MANUFACTURE ANY APPARATUS OR DEVICE, WITHOUT THE PRIOR WRITTEN AUTHORIZATION OF HARSCO.

CHANGE #		REVISION	DR	DATE
12509.33	D			01/95 TRIPPE
105640	E		DWJ	05/10
EC502549	F	ITEMS 18 & 19 QTY 2 TO 1, ROTATED ALL VIEWS	CJW	12/14/11

DRAWING TITLE/DESCRIPTION: EMERGENCY PUMP KIT

MACHINE TYPE-MODEL: MARK IV

E3 PROJECT FILE NAME: C8563WAB

SHEET NUMBER: 2

NUMBER OF JUPITER SHEETS: 0

TOTAL NUMBER OF SHEETS: 2

DRAWN BY: DWJ

REL. DATE:

SIZE: D

SCALE:

HARSCO RAIL

E3 DRAWING

C8563WAB

ENG.DWG.NO.

D6054YAA

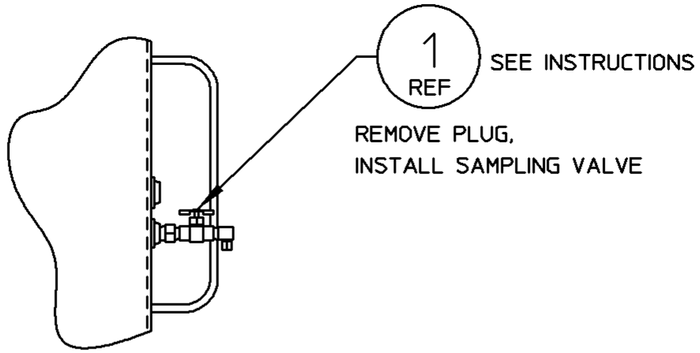

DETAIL-A

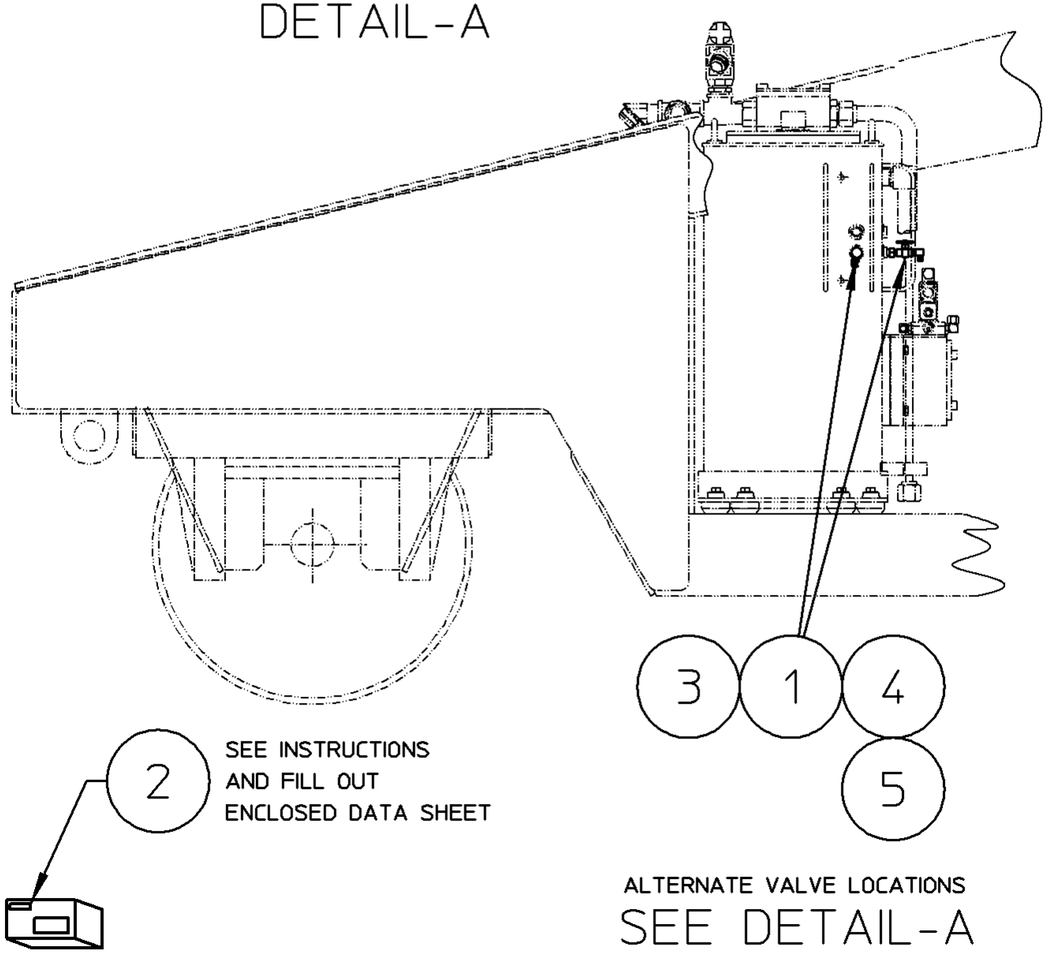

ALTERNATE VALVE LOCATIONS
SEE DETAIL-A

REVISIONS							
NO	ER	DESCRIPTION	ZONE	DR	CK	APP	MF
1	7439.1	RELEASED		MLT	JGA	LES	
2	7439.6	ADDED ITEM-3		LES	JGA		
3		IT-1 WAS D6052Y01 "SAMPLING VALVE" IT-3 WAS L420105 "3/8 X 1/4 BUSHING" IT-4 - 6 ADDED, REVISED INSTRUCTION		LES		WHC	

INSTRUCTIONS FOR TAKING THE OIL SAMPLE.

BEFORE YOU BEGIN, READ THE INSTRUCTIONS IN SAMPLING KIT (ITEM-2). REMOVE METAL DUSTCOVER ON DISCHARGE PORT OF SAMPLING VALVE (ITEM-1). DISCHARGE APPROXIMATELY 16 OZ. OF OIL TO FLUSH VALVE, DO THIS BY TURNING WING KNOB TO THE ON POSITION. DISPOSE OF THIS WASTE IN AN APPROPRIATE MANNER. LOCATE CLEAN OIL SAMPLING BOTTLE FROM FLUID SAMPLING KIT, REMOVE LID FROM BOTTLE TAKING CARE NOT TO INTRODUCE ANY FOREIGN MATERIAL ONTO LID OR INTO BOTTLE, SUGGEST PUTTING LID BACK INTO PLASTIC ZIP-LOK BAG, THEN HOLD BOTTLE UNDER DISCHARGE PORT, TURN WINGED KNOB TO DESIRED FLOW RATE AND FILL BOTTLE TO THE PROPER LEVEL. THE KNOB CAN BE ADJUSTED TO THROTTLE THE RATE OF FLOW. WHEN BOTTLE IS NEAR FULL BEGIN CLOSING OFF THE WINGED KNOB REPLACE LID ON SAMPLING BOTTLE IMMEDIATELY REPLACE THE METAL DUSTCOVER ON SAMPLING VALVE - WRENCH TIGHT.

FIG NO.	ITEM NO.	PART NUMBER	DESCRIPTION AND MATERIAL SIZE (REF.ONLY)	QTY	
	6	D6054YAA	KIT INSTALLATION (DRAWING ONLY)	REF	
	5	L420351	1/4 JIC CAP	1	
	4	L420002	1/4 NPT X 1/4 JIC X 90° ELBOW	1	
	3	L425403	3/8 X 1/4 NIPPLE	1	
	2	D6053Y01	FLUID SAMPLING KIT	1	
	1	0-3410002-0-01	NEEDLE VALVE	1	

IMPLIED TOLERANCES
ALL DIMENSIONS ARE IN INCHES-TOLERANCE UNLESS OTHERWISE SPECIFIED

NOMINAL SIZE RANGE		PLUS OR MINUS			NOMINAL SIZE RANGE		PLUS OR MINUS		
OVER	TO	FRACTION	2 PLACE DECIMAL	3 PLACE DECIMAL	OVER	TO	FRACTION	2 PLACE DECIMAL	3 PLACE DECIMAL
-	1	1/64	.01	.003	6	24	3/64	.03	.008
1	6	1/32	.02	.005	24	-	1/16	.05	.010

ANGULAR DIMENSIONS PLUS OR MINUS 1 DEGREE

√ ALL MACHINED SURFACES TO HAVE A SURFACE FINISH OF 125 MICROINCHES UNLESS OTHERWISE SPECIFIED.

WEIGHT lbs.

3rd ANGLE PROJECTION

DO NOT SCALE

WELDING SPECIFICATION
UNLESS OTHERWISE SPECIFIED ALL WELDS SHOULD ADHERE TO FAIRMONT TAMPER WELDING SPECIFICATION 101

DESCRIPTION (24)
FLUID SAMPLING KIT INSTL

DRAWN M TRIPPE	DATE 3/13/95	MACHINE TYPE MARK IV
CHECKED JGA	DATE 3/16/95	
APP-ENG LES	DATE 3/16/95	
SHEET 1	CONT. ON —	
LAST ECR. 7694.1	CHECKED dvan	ENG.DWG.NO. D6054YAA
	DATE 27-Jul-95	

Fairmont Tamper™
2401 Edmund Road-Box 20
Cayce-West Columbia,
South Carolina 29171-0020
(803) 822-9160

ENG.DWG.NO.
C9365WAH

REVISIONS							
NO	ER	DESCRIPTION	ZONE	DR	CK	APP	MF
1	11320.9	NEW RELEASE		JBR	DGV	AML	
2	11711.10	PICTORIAL UPDATE. ADDED LEADER NOTE. TOP OF TOOLBOX COVER. 33 WAS 33 5/8. 6/10/99		JBR	HWJ	AML	
3	11711.212	ITEM 18 WAS ITEM 17 ITEM (16) - (26) REF ADDED ITEM 27 ADDED ADDED NOTE '....HOSE KIT'	C-1	LES	HWJ	AML	
D	K00479	DIM 34 1/2 WAS 33.		PJG	JOC	JOC	
E		NO CHANGE					

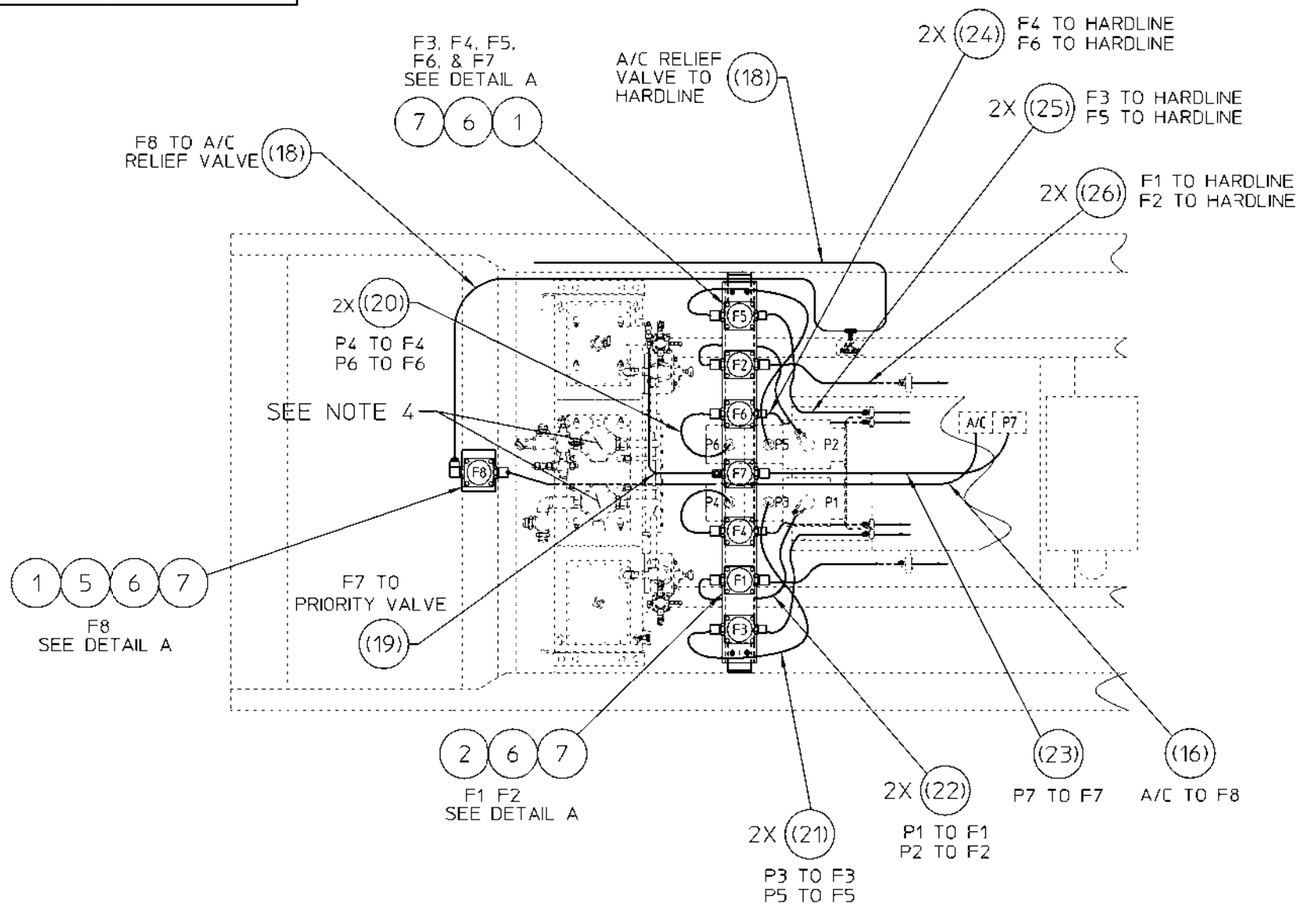

NOTES:

1. 3 MICRON FILTERS
2. 8 FILTERS FOR USE WITH HYDRAULIC DRIVEN A/C COMPRESSOR OPTION
3. REPLACEMENT FILTER ELEMENT 0-3354005-0-09 (3 MICRON)
4. REPLACEMENT RETURN FILTER ELEMENT 0-3354005-0-13 (4.5 MICRON)

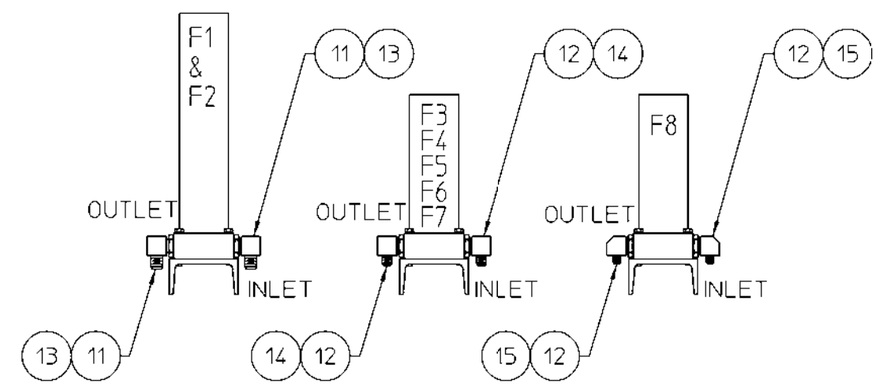

DETAIL A

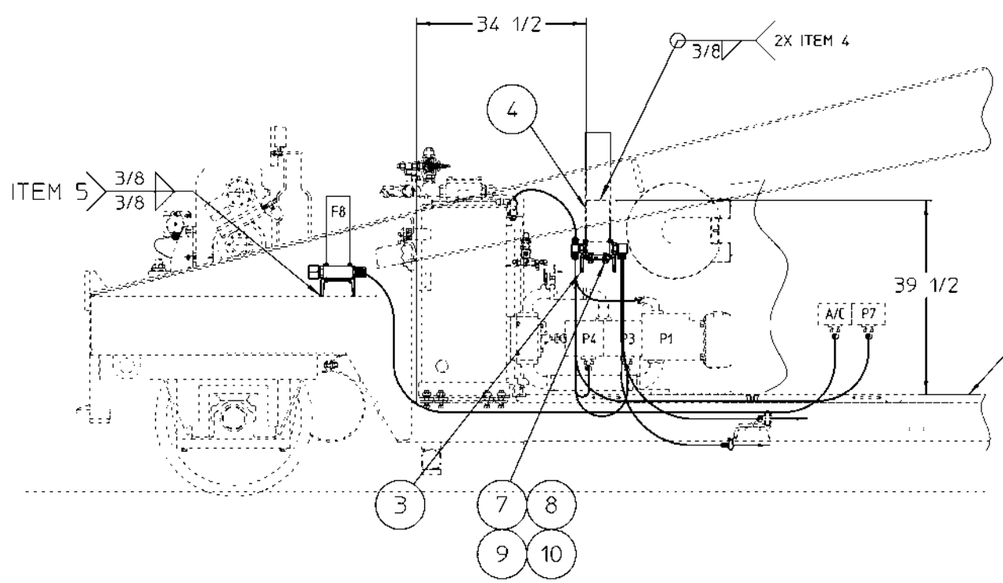

NOTE:
(27) REFERENCE ITEMS 16 & 18 THRU 26 INCLUDED IN ITEM 27 "HOSE KIT"

TOP OF TOOLBOX COVER

SEE SEPARATE PARTS LIST

FIG NO.	ITEM NO.	PART NUMBER	DESCRIPTION AND MATERIAL SIZE (REF.ONLY)	QTY

IMPLIED TOLERANCES
ALL DIMENSIONS ARE IN INCHES-TOLERANCE UNLESS OTHERWISE SPECIFIED

NOMINAL SIZE RANGE		PLUS OR MINUS			NOMINAL SIZE RANGE		PLUS OR MINUS		
OVER	TO	FRACTION	2 PLACE DECIMAL	3 PLACE DECIMAL	OVER	TO	FRACTION	2 PLACE DECIMAL	3 PLACE DECIMAL
-	1	1/64	.01	.003	6	24	3/64	.03	.008
1	6	1/32	.02	.005	24	-	1/16	.05	.010

ANGULAR DIMENSIONS PLUS OR MINUS 1 DEGREE

√ ALL MACHINED SURFACES TO HAVE A SURFACE FINISH OF 125 MICRONCHES UNLESS OTHERWISE SPECIFIED.

WELDING SPECIFICATION
UNLESS OTHERWISE SPECIFIED ALL WELDS SHOULD ADHERE TO FAIRMONT TAMPER WELDING SPECIFICATION NO. 101

WEIGHT LBS.

3rd ANGLE PROJECTION

DO NOT SCALE

SHEET 1 CONT. ON –

DESCRIPTION 124
HIGH PRESSURE FILTER KIT

DRAWN J Rowell	DATE 09/16/98	MACHINE TYPE MARK IV	
CHECKED DGV	DATE 09/17/98		
APP-ENG A.Lindsey	DATE 09/16/98	Fairmont Tamper 2401 Edmund Road-Box 20 Cayce-West Columbia, South Carolina 29171-0020 (803) 822-9160	
APP-MFG	DATE		
LAST ECR. 11711.37	CHECKED Hwj DATE 17-Apr-00	ENG.DWG.NO. C9365WAH	

THIS DOCUMENT CONTAINS PROPRIETARY INFORMATION AND SUCH INFORMATION MAY NOT BE DISCLOSED TO OTHERS FOR ANY PURPOSE OR USED FOR MANUFACTURING PURPOSES WITHOUT THE WRITTEN PERMISSION OF FAIRMONT TAMPER.

PARTS LIST

ITEM NO	PART NUMBER	DESCRIPTION	QUANTITY										
1	B5548Y08	HYD HP FILTER	6										
2	B5548Y09	HYD HP FILTER	2										
3	D2562W02	FILTER BRACKET	1										
4	D6473X02	HANGER BRACKET	2										
5	D2562W05	FILTER BRACKET	1										
6	A0036131	1/2-13 X 3 1/2 HHCS	32										
7	A0061013	1/2 MEDIUM LOCK WASHER	36										
8	A0036124	1/2-13 X 1 3/4 HHCS	4										
9	A0059005	1/2 FLAT WASHER	4										
10	A0055016	1/2-13 HEX NUT	4										
11	0-3304016-0-13	O-RING BOSS REDUCER	4										
12	0-3304016-0-12	ORB REDUCER (-24X-12)	12										
13	L421701	O-RING BOSS/37°FLARE 90°	4										
14	L422762	-12 ORB X JIC X 90°	10										
15	L425952	3/4 ORB X 1/2 JIC 90°	2										
16	H2353W04-009	-8 HP HOSE ASSY (A/C PUMP)	0	1									
~~17~~	~~H2353W07-009~~	~~-8 HP HOSE ASSY (A/C PUMP)~~	~~0~~										
18	H2353W04-010	-8 HP HOSE ASSY (A/C PUMP)	0	2									
19	H2353W04-008	-12 HP HOSE ASSY (P7)	0	1									
20	H2353W04-005	-12 HP HOSE ASSY (P4 & P6)	0	2									
21	H2353W04-003	-12 HP HOSE ASSY (P3 & P5)	0	2									
22	H2353W04-001	-16 HP HOSE ASSY (P1 & P2)	0	2									
23	H2353W04-007	-12 HP HOSE ASSY (P7)	0	1									
24	H2353W04-006	-12 HP HOSE ASSY (P4 & P6)	0	2									
25	H2353W04-004	-12 HP HOSE ASSY (P3 & P5)	0	2									
26	H2353W04-002	-16 HP HOSE ASSY (P1 & P2)	0	2									
27	H2353W04	HOSE KIT	1										

ASSEMBLY IDENTIFIER

MARK IV W/HYD A/C (3 MICRON FILTERS)	H2353W04 (REF) HOSE KIT									

ASSEMBLY DESCRIPTION

ER										
DR										
CK										
APP										
MF										

REVISIONS

NO	ER	DESCRIPTION	DR	CK	APP	MF
1	11320.9	NEW RELEASE	JBR	DGV	AML	
3	11711.212	ITEM 16 - 26 ADDED REF P/N & QTY ITEM 27 ADDED	LES	HWJ	AML	
E	100530	IT-16 WAS H2353W07-009, IT-18 WAS H2353W07-010, IT-19 WAS H2353W07-008, IT-20 WAS H2353W07-005, IT-21 WAS H2353W07-003, IT-22 WAS H2353W07-001, IT-23 WAS H2353W07-007, IT-24 WAS H2353W07-006, IT-25 WAS H2353W07-004, IT-26 WAS H2353W07-002.	PJG	JOC	JOC	

SHEET 1 (CONT ON -)
LAST ECR. 11711.37
CHECKED hwj
DATE 17-Apr-00
DWG NO C9365WAH

DWG NO C9365WAH
SHEET 1
CONT ON -
DESCRIPTION (24) HIGH PRESSURE FILTER KIT
DRAWN J Rowell
DATE 09/16/98
CHECKED DGV
DATE 09/17/98
APP A.Lindsey
DATE 09/16/98
APP
DATE

Fairmont Tamper™
2401 Edmund Road-Box 20
Cayce-West Columbia,
South Carolina 29171-0020
(803) 822-9160

MKIV HOSE KIT (OPTIONS)

ITEM NO	SIZE/TYPE/LENGTH	QTY	LENGTH	DESCRIPTION	HOSE TYPE	DESCRIPTION	WHERE IT GOES ON THE MACHINE
				HIGH PRESSURE FILTER KIT		(C9365WAH)	
001	16HP34	2	34	1 HIGH PRESSURE	FC136-16	4 HEAVY SPIRAL WIRE	P-1 AND P-2 PUMP OUTLET TO IN PORT OF HIGH PRESSURE FILTER
002	16HP48	2	48	1 HIGH PRESSURE	FC136-16	4 HEAVY SPIRAL WIRE	OUTLET PORT OF P-1 AND P 2 HIGH PRESSURE FILTERS TO HARD LINE
003	12HP52	2	52	3/4 HIGH PRESSURE	GH793 12	MATCHMATE PLUS TUFF COAT	P 3 AND P 5 PUMP TO FILTER INLET
004	12HP56	2	56	3/4 HIGH PRESSURE	GH793 12	MATCHMATE PLUS TUFF COAT	P 3 AND P 5 PUMP TO HARD LINE
005	12HP46	2	46	3/4 HIGH PRESSURE	GH793-12	MATCHMATE PLUS TUFF COAT	P-4 AND P-6 PUMP TO FILTER INLET
006	12HP53	2	53	3/4 HIGH PRESSURE	GH793 12	MATCHMATE PLUS TUFF COAT	P 4 AND P 6 FILTER TO HARD LINE
007	12HP85	1	85	3/4 HIGH PRESSURE	GH793-12	MATCHMATE PLUS TUFF COAT	P-7 PUMP OUTLET TO IN PORT OF HIGH PRESSURE FILTER
008	12HP85	1	85	3/4 HIGH PRESSURE	GH793-12	MATCHMATE PLUS TUFF COAT	OUTLET PORT OF P-7 HIGH PRESSURE FILTER TO PORT 1 ON PRIORITY VALVE
009	8HP128	1	128	1/2 HIGH PRESSURE	GH793-8	TUFF COAT	P-8 PUMP TO IINLET ON P-8 FILTER
010	8HP120	2	120	1/2 HIGH PRESSURE	GH793-8	TUFF COAT	P-8 FILTER OUTLET TO RELIEF VALVE

TO ORDER INDIVIDUAL HOSE ASSEMBLIES
USE BASE NUMBER H2353W04 WITH ITEM NUMBER AS SUFFIX
EXAMPLE: H2353W04-001

SOLID EDGE DRAWING

CONFIDENTIAL
© COPYRIGHT 2006 HARSCO TRACK TECHNOLOGIES. THIS DRAWING OR DOCUMENT IS THE PROPERTY OF HARSCO TRACK TECHNOLOGIES AND EMBODIES CONFIDENTIAL INFORMATION, TRADE SECRET INFORMATION, AND/OR KNOW-HOW THAT IS THE PROPERTY OF HARSCO TRACK TECHNOLOGIES. IF ASSOCIATED WITH DRAWING OR DOCUMENT THE RECIPIENT AGREES NOT TO PROVIDE OR OTHERWISE MAKE AVAILABLE THE DRAWING OR DOCUMENT OR ANY INFORMATION OR KNOW-HOW EMBODIED THEREIN, TO ANY THIRD PARTY AND NOT TO REPRODUCE OR USE THE DRAWING OR DOCUMENT TO MANUFACTURE ANY APPARATUS OR DEVICE WITHOUT THE PRIOR WRITTEN AUTHORIZATION OF HARSCO TRACK TECHNOLOGIES.

UNLESS OTHERWISE SPECIFIED TOLERANCES

LINEAR DIMENSIONS		ISO 2768 MEDIUM		ANGULAR DIMENSIONS		ASME Y14.5M-1994	
DIMS	TOL	DIMS	TOL	DIMS	TOL	DIMS	TOL
0 - 6	±.5	0.5 - 3	±.05	0 - 10	±1°	0 - 12	±1°
6 - 30	±.2	3 - 6	±.05	10 - 50	±.50°	12 - 72	±.25°
30 - 120	±.3	6 - 30	±.1	50 - 120	±.25°	72 - 144	±.25°
120 -	±.5	30 - 120	±.15	120 -	±.25°	144 -	±.25°

THIRD ANGLE PROJECTION

CHANGE	RC	REVISION	DATE
100696	C	WAS ML10 DWG, 11-007 LENGTH WAS 90	2-27-06

Description: MKIV HOSE KIT
Drawn by: _____
Machine Type: MARK IV
Drawn: H2353W04.dft
Drawn: D.Hewitt 12-07-06
Weight: Scale: 1:4
Unit:
Eng: J.BR Appd: J.BR

HTT
Harsco Track Technologies
Harsco
Columbia, SC

Part Number: H2353W04 Size: D Sheet: 1 of 1

Plotted by cwolf on 12/7/2006 H2353W04.dft

ENG.DWG.NO.
D3817WAA

REVISIONS							
NO	ER	DESCRIPTION	ZONE	DR	CK	APP	MF
1	7014.8	NEW RELEASE		AFG	DGV	JOC	
2	6864 .55	DELETED ITEMS 3-5. P/N'S WERE D3783X01,A0056002 AND A0061008 RESPT. ITEM 2 WAS P/N D3784Y02.		AFG	DGV	AML	
3	10297.1	IT-1 WAS D2792W01. ADDED ITS-3 THRU 6. 8/14/97		JBR	DGV	AML	
4	12429	IT-2 WAS D4353X01 10/25/2001		JBR	DGV	AML	

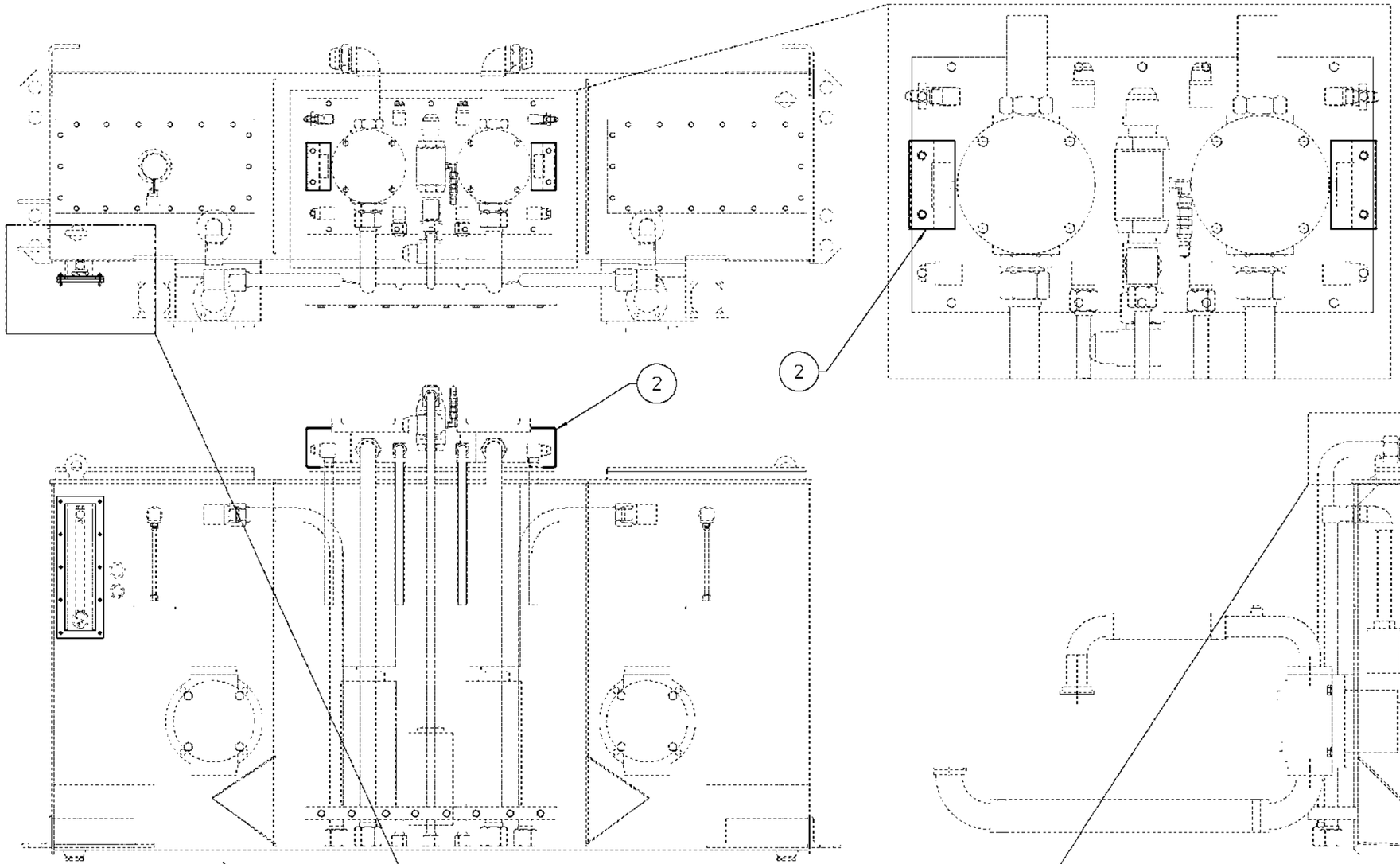

NOTE:
LOCATE IT-1 SO THAT EDGES OF SIGHT GLASS GUARDS ARE FLUSH TO SLIGHTLY RECESSED FROM THIS SURFACE OF IT-1

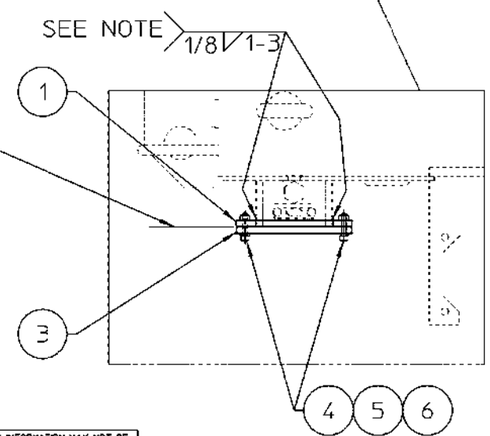

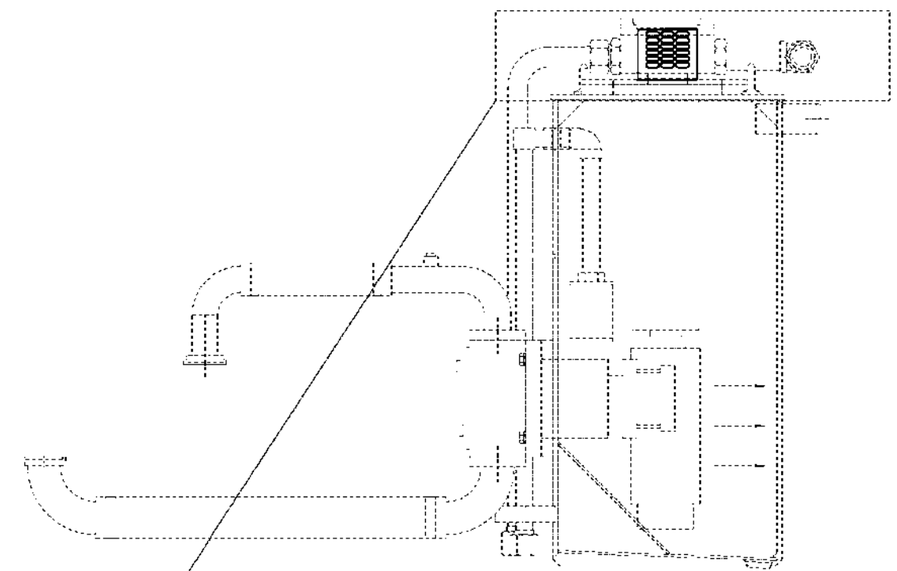

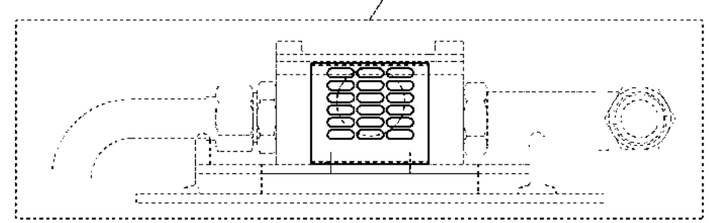

FIG NO.	ITEM NO.	PART NUMBER	DESCRIPTION AND MATERIAL SIZE (REF.ONLY)	QTY
	6	A0060006	#10 SAE WASHER	10
	5	L41127	10-24 ESNA NUT	10
	4	A0041020	10-24 X 1 SOC HD CS	10
	3	G4220Y01	SIGHT GLASS COVER	1
	2	D4353X03	FILTER GAUGE GUARD	2
	1	G4219Y01	SIGHT GLASS COVER FRAME	1

IMPLIED TOLERANCES
ALL DIMENSIONS ARE IN INCHES-TOLERANCE UNLESS OTHERWISE SPECIFIED

NOMINAL SIZE RANGE OVER	TO	PLUS OR MINUS FRACTION	2 PLACE DECIMAL	3 PLACE DECIMAL	NOMINAL SIZE RANGE OVER	TO	PLUS OR MINUS FRACTION	2 PLACE DECIMAL	3 PLACE DECIMAL
-	1	1/64	.01	.003	6	24	3/64	.03	.008
1	6	1/32	.02	.005	24	-	1/16	.05	.010

ANGULAR DIMENSIONS PLUS OR MINUS 1 DEGREE

√ ALL MACHINED SURFACES TO HAVE A SURFACE FINISH OF 125 MICROINCHES UNLESS OTHERWISE SPECIFIED.

WELDING SPECIFICATION

UNLESS OTHERWISE SPECIFIED ALL WELDS SHOULD ADHERE TO FAIRMONT TAMPER WELDING SPECIFICATION NO. 101

WEIGHT lbs.

3rd ANGLE PROJECTION

DO NOT SCALE

SHEET 1 CONT. – OH –

DESCRIPTION (24): HYD TANK GAUGE COVERS

DRAWN	AL GUNN	DATE	7-11-94
CHECKED	DGV	DATE	7-13-94
APP-ENG	JOC	DATE	7-13-94
APP-MFG		DATE	
LAST ECR	12429 .24	CHECKED	DWL
		DATE	31-Oct-01

MACHINE TYPE: MARK IV

Fairmont Tamper™
2401 Edmund Road-Box 20
Cayce-West Columbia,
South Carolina 29171-0020
(803) 622-9460

ENG.DWG.NO. D3817WAA

THIS DOCUMENT CONTAINS PROPRIETARY INFORMATION AND SUCH INFORMATION MAY NOT BE DISCLOSED TO OTHERS FOR ANY PURPOSE OR USED FOR MANUFACTURING PURPOSES WITHOUT THE WRITTEN PERMISSION OF FAIRMONT TAMPER.

ENG.DWG.NO.
H6403WAA

REVISIONS							
NO	ER	DESCRIPTION	ZONE	DR	CK	APP	MF

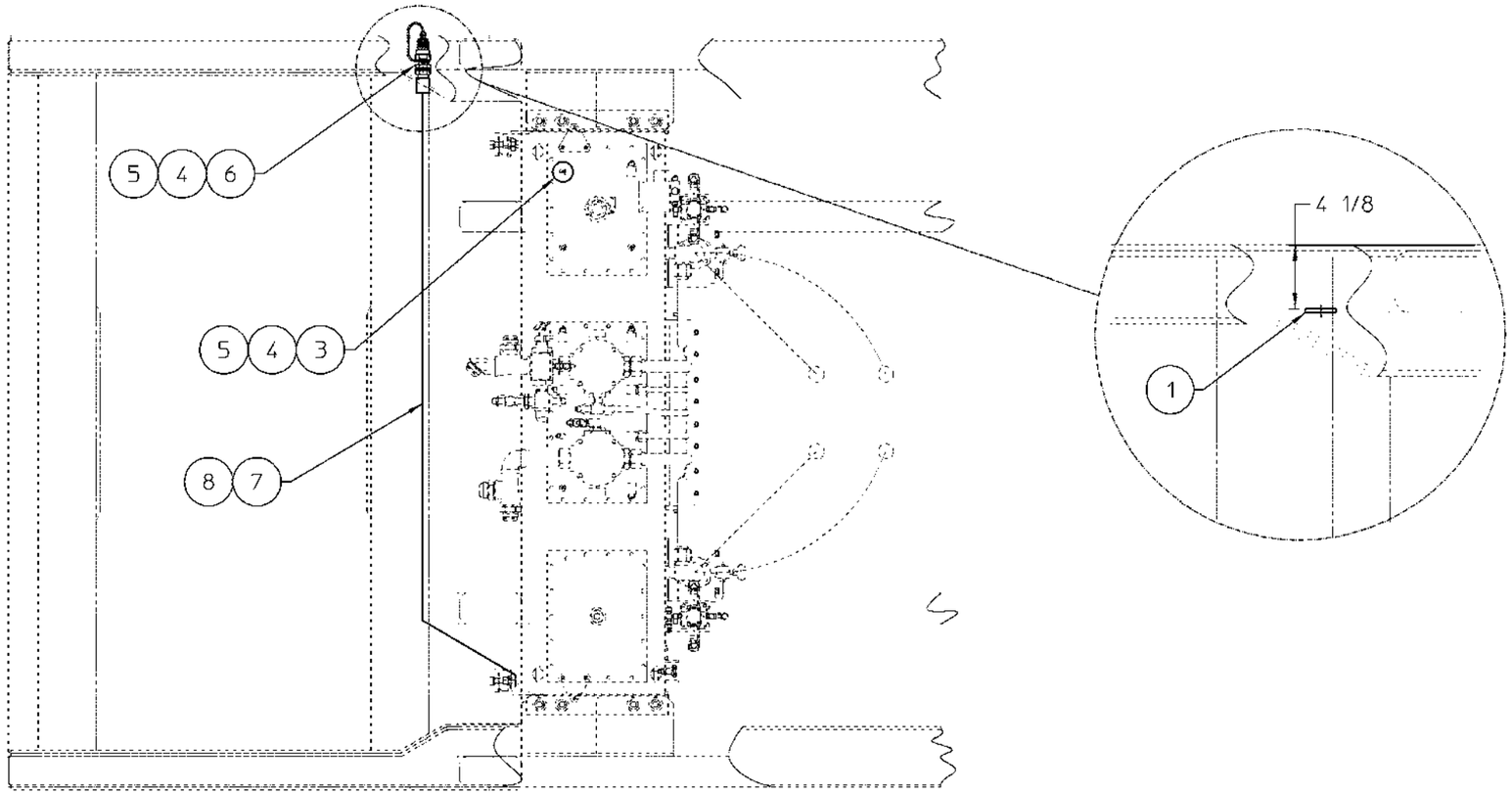

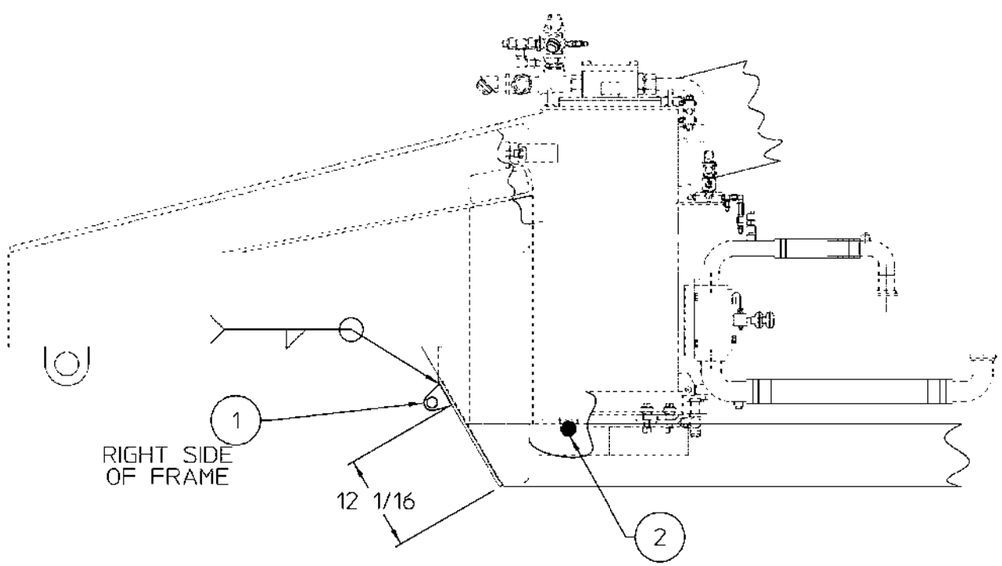

10X

FIG NO.	ITEM NO.	PART NUMBER	DESCRIPTION AND MATERIAL SIZE (REF.ONLY)	QTY
	8	0-3304135-0-14	HOSE ENDS 1"HOSE	2
	7	L420215	2651 MED PRESS HOSE 1"	10
	6	0-3304058-0-02	FTG 1" MP-JIC BULK HD ST	1
	5	0-3304086-0-08	1" MALE HYD Q.D. COVER	2
	4	L425318	1" MALE HYD QUICK DISC.	2
	3	L411415	COUPLING 1" MP-MP	1
	2	L411533	FTG 1" X 45° MP-JIC	1
	1	4001729	BULK HD BRKT	1

IMPLIED TOLERANCES
ALL DIMENSIONS ARE IN INCHES-TOLERANCE UNLESS OTHERWISE SPECIFIED

NOMINAL SIZE RANGE		PLUS OR MINUS			NOMINAL SIZE RANGE		PLUS OR MINUS		
OVER	TO	FRACTION	2 PLACE DECIMAL	3 PLACE DECIMAL	OVER	TO	FRACTION	2 PLACE DECIMAL	3 PLACE DECIMAL
-	1	1/64	.01	.003	6	24	3/64	.03	.008
1	6	1/32	.02	.005	24	-	1/16	.05	.010

ANGULAR DIMENSIONS PLUS OR MINUS 1 DEGREE
ALL MACHINED SURFACES TO HAVE A SURFACE FINISH OF 125 MICRONCHES UNLESS OTHERWISE SPECIFIED.

WELDING SPECIFICATION

UNLESS OTHERWISE SPECIFIED ALL WELDS SHOULD ADHERE TO FAIRMONT TAMPER WELDING SPECIFICATION NO. 101

WEIGHT lbs.

3rd ANGLE PROJECTION

DO NOT SCALE

SHEET 1 CONT. – ON

DESCRIPTION (24)
REMOTE FILTERATION SYS

DRAWN A.OUZTS	DATE 21 MAY 03	MACHINE TYPE MK IV	
CHECKED AML	DATE 05/22/03		
APP-ENG AML	DATE 05/22/03		
APP-MFG	DATE		
LAST ECR. 13013 .7	CHECKED dvgn	ENG.DWG.NO. H6403WAA	
	DATE 23-May-03		

Fairmont Tamper™
2401 Edmond Road-Box 20
Cayce-West Columbia,
South Carolina 29171-0020
(803) 822-9160

THIS DOCUMENT CONTAINS PROPRIETARY INFORMATION AND SUCH INFORMATION MAY NOT BE DISCLOSED TO OTHERS FOR ANY PURPOSE OR USED FOR MANUFACTURING PURPOSES WITHOUT THE WRITTEN PERMISSION OF FAIRMONT TAMPER.

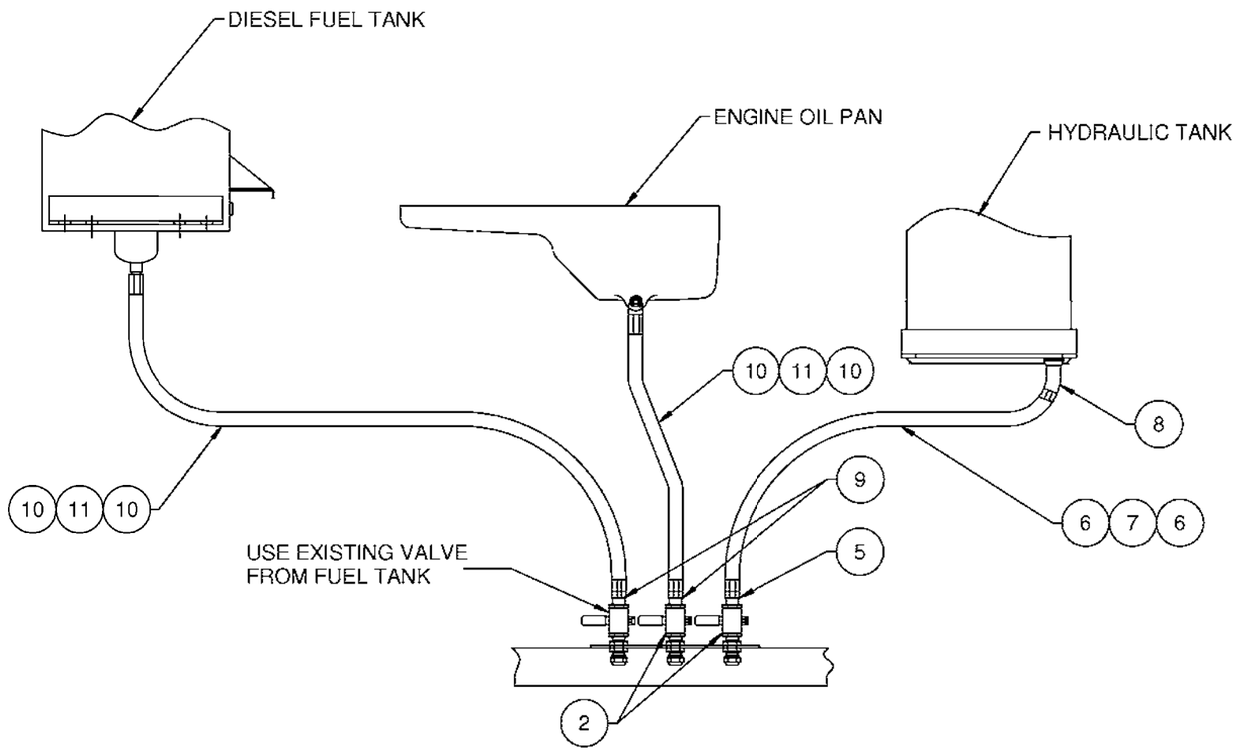

NOTES:
1. REMOVE DIRECTION ARROWS FROM VALVE BODY CASTINGS
2. INSTALL VALVES SO THAT HANDLES ARE ORIENTED AS SHOWN
3. HOSE LENGTHS NOT TO SCALE
4. REPLACE EXISTING ENGINE OIL DRAIN HOSE WITH 3/4 HOSE, ITEM 11.
5. PAINT MTG PLATE AS FOLLOWS; FUEL SECTION (LEFT) GREEN, ENGINE OIL (CENTER) YELLOW, HYDRAULIC (RIGHT) BLUE

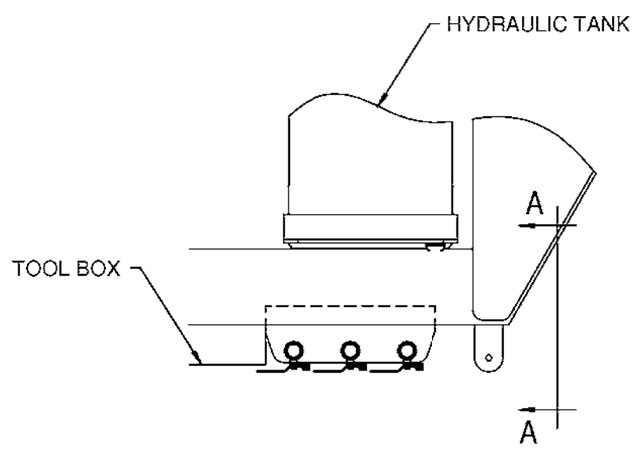

RIGHT FRONT OF MACHINE

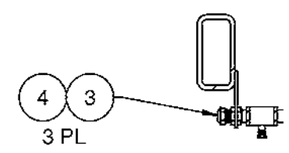

SECTION A-A

ITEM NUMBER	PART NUMBER	DESCRIPTION	QUANTITY
2	F019835	BALL VLV PAD LOCKING	2
3	A1302Y01	ADAPTER	3
4	F017138	CAP, -12 JIC	3
5	L420092	PIPE, JIC/MALE 45 DEG.	1
6	L411530	HOSE END, -16 JIC SW	2
7	L420215	HOSE, -16 MED PRES (FT)	1
8	F012496	PIP JIC/MALE 45DEG	1
9	F010581	ADAPTOR, JIC/MALE	2
10	0-3304135-0-12	HOSE END, -12 JIC SW	4
11	L411422	3/4 MP HOSE (FT)	30

SOLID EDGE DRAWING

CONFIDENTIAL

© COPYRIGHT 2011 HARSCO TRACK TECHNOLOGIES. THIS DRAWING OR DOCUMENT IS THE PROPERTY OF HARSCO TRACK TECHNOLOGIES AND IS CONFIDENTIAL INFORMATION, TRADE SECRET INFORMATION, AND ACKNOWLEDGED THAT IS THE PROPERTY OF HARSCO TRACK TECHNOLOGIES. BY ACCEPTING THIS DRAWING OR DOCUMENT THE RECIPIENT AGREES: (1) NOT TO PROVIDE, OR OTHERWISE MAKE AVAILABLE, THE DRAWING OR DOCUMENT OR ANY INFORMATION CONTAINED HEREIN TO ANY THIRD PARTY AND (2) NOT TO REPRODUCE OR REPRODUCE THE DRAWING OR DOCUMENT TO MANUFACTURE ANY APPARATUS OR DEVICE WITHOUT THE PRIOR WRITTEN AUTHORIZATION OF HARSCO TRACK TECHNOLOGIES

UNLESS OTHERWISE SPECIFIED ALL DIMENSIONS ARE IN INCHES TOLERANCE: .XX ±.03 .XXX ±.010 ANGLES ±1°

MATERIAL: SEE MATERIAL LIST

FINISH: PAINT PER SPECIFICATION

DO NOT SCALE DRAWING

THIRD ANGLE PROJECTION

CHANGE	BY	REVISION	DATE
ECN 102840		[illegible]	[illegible]

DESCRIPTION: REMOTE FLUID DRAIN INSTL

DRAWING NO: ----------

MODEL: MARK IV

PART NO: G2454WAA ESTI

DRAWN: rowell 2-25-97

SCALE: 1:4

APPD: DGV

MFG APPD: AM

SIZE: D

REV: 1

G2454WAA

HTT
Harsco Track Technologies
Harsco
Columbia, SC

Plotted by bbrunson on 4/23/2009 G2454WAA.dft

ENG.DWG.NO.
G2045XAA

REVISIONS							
NO	ER	DESCRIPTION	ZONE	DR	CK	APP	MF
1	8793.2	NEW RELEASE		JBR			
2		PICTORIAL CHANGE, IT 5 WAS G2073Y01, IT 6 WAS 0-3202000-0-16, IT 7 WAS A0071064, IT 8 WAS A0059044, IT 9 WAS L40387, 54±1/4 WAS 56 5/8±1/4. ITS 6 THROUGH 9 QUANTITY WAS 3.		JBR			

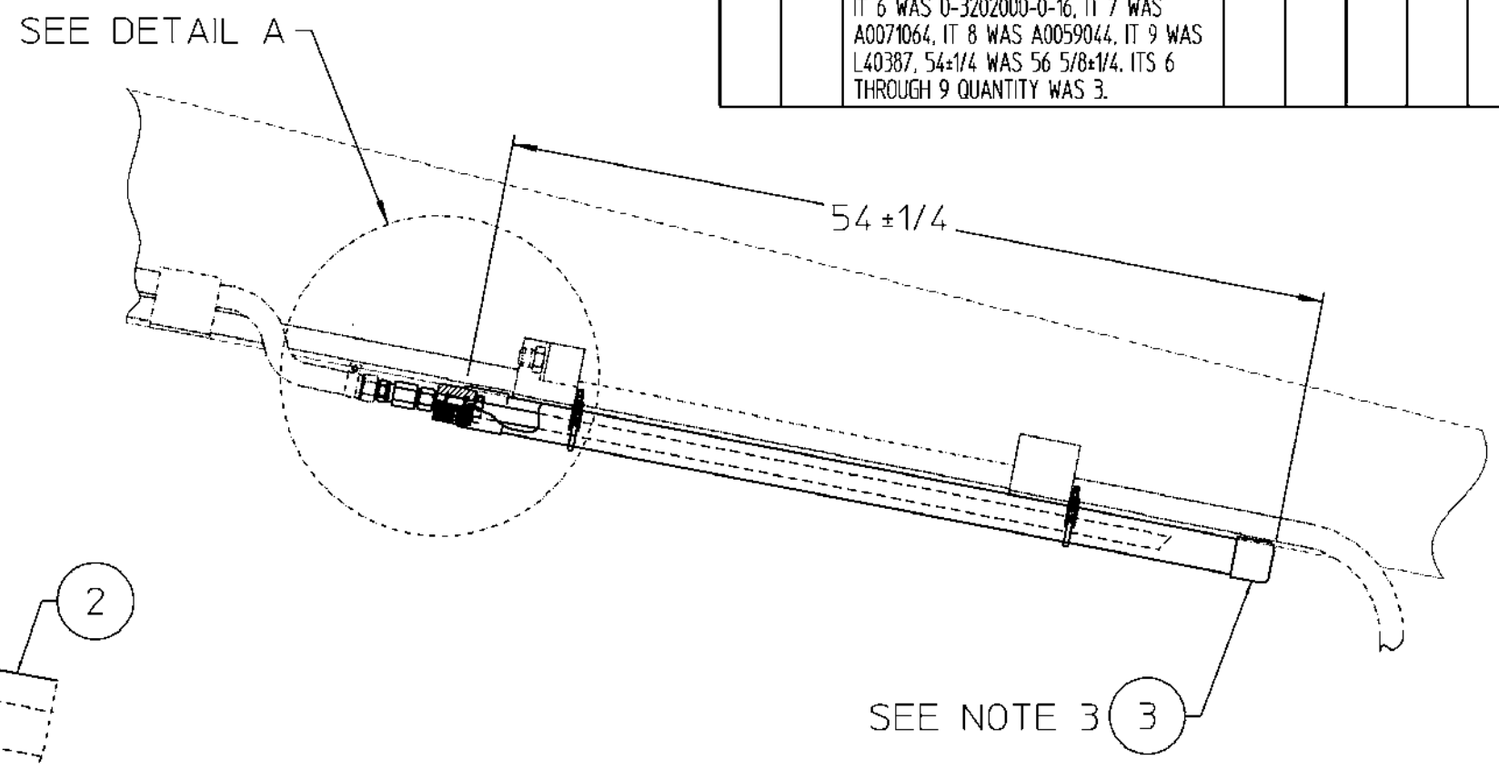

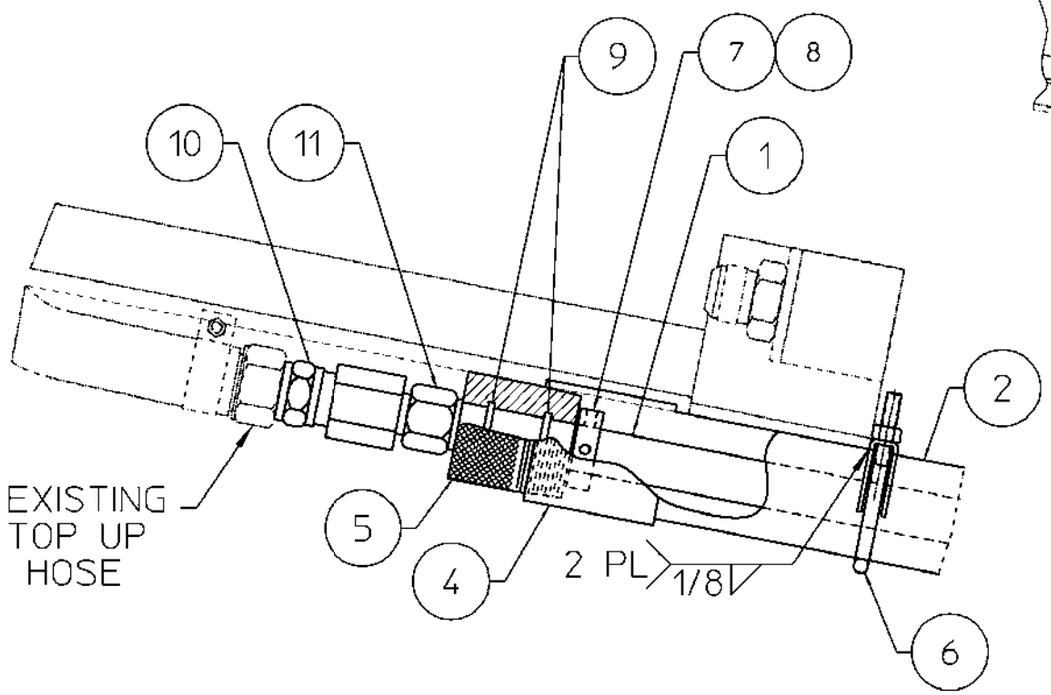

DETAIL A

NOTES:

1. CUT PVC PIPE, ITEM 2, TO OBTAIN DIMENSION SHOWN. SECURE ITEM 3 AND ITEM 4 TO PVC PIPE, ITEM 2, USING SOLVENT TYPE PVC CEMENT.
2. TIGHTEN BUSHING, ITEM 5, BY HAND ONLY.
3. LOCATE (1) Ø 1/4 HOLE IN THE EDGE OF THE CAP AS A DRAIN HOLE. MOUNT SO THAT HOLE IS ON THE BOTTOM.
4. CONNECT EXISTING TOP UP HOSE TO STAINLESS FILL TUBE AS SHOWN.

PLOT SCALE = (1/8)

FIG NO.	ITEM NO.	PART NUMBER	DESCRIPTION AND MATERIAL SIZE (REF.ONLY)	QTY
	11	G2059Y01	SST BITE TYPE ADPTR	1
	10	G2058Y01	STAINLESS JIC ADPTR	1
	9	L40022	1 ID X 1 1/4 OD O RING	2
	8	A0062079	1/4-20X3/8 SET SCR SS	2
	7	G2469Y01	HAND FILL TUBE COLLAR	1
	6	0-3612012-0-01	2 1/2 MUFFLER CLAMP	2
	5	G2468Y01	HAND FILL O RING BUSHING	1
	4	G2072Y01	PVC FEMALE ADAPTER	1
	3	G2043Y01	PVC CAP	1
	2	G2042Y01	PVC PIPE (UNITS FEET)	5
	1	G2044X01	HYD TUBE	1

IMPLIED TOLERANCES
ALL DIMENSIONS ARE IN INCHES-TOLERANCE UNLESS OTHERWISE SPECIFIED

NOMINAL SIZE RANGE		PLUS OR MINUS			NOMINAL SIZE RANGE		PLUS OR MINUS		
OVER	TO	FRACTION	2 PLACE DECIMAL	3 PLACE DECIMAL	OVER	TO	FRACTION	2 PLACE DECIMAL	3 PLACE DECIMAL
-	1	1/64	.01	.003	6	24	3/64	.03	.008
1	6	1/32	.02	.005	24	-	1/16	.05	.010

ANGULAR DIMENSIONS PLUS OR MINUS 1 DEGREE

√ ALL MACHINED SURFACES TO HAVE A SURFACE FINISH OF 125 MICROINCHES UNLESS OTHERWISE SPECIFED.

WELDING SPECIFICATION

UNLESS OTHERWISE SPECIFIED ALL WELDS SHOULD ADHERE TO FAIRMONT TAMPER WELDING SPECIFICATION NO. 101

WEIGHT lbs.

3rd ANGLE PROJECTION

DO NOT SCALE

SHEET 1 CONT. ON –

DESCRIPTION (24
SST TOP FILL TUBE/CASE

DRAWN J.ROWELL	DATE 1/24/97	MACHINE TYPE MARK IV (97)	
CHECKED DGV	DATE 1/29/97	Fairmont Tamper™ 2401 Edmund Road-Box 20 Cayce-West Columbia, South Carolina 29171-0020 (803) 822-9160	
APP-ENG A.LINDSEY	DATE 1/28/97		
APP-MFG	DATE		
LAST ECR. 8793.11	CHECKED dvan	ENG.DWG.NO. G2045XAA	
	DATE 6-Jun-97		

THIS DOCUMENT CONTAINS PROPRIETARY INFORMATION AND SUCH INFORMATION MAY NOT BE DISCLOSED TO OTHERS FOR ANY PURPOSE OR USED FOR MANUFACTURING PURPOSES WITHOUT THE WRITTEN PERMISSION OF FAIRMONT TAMPER.

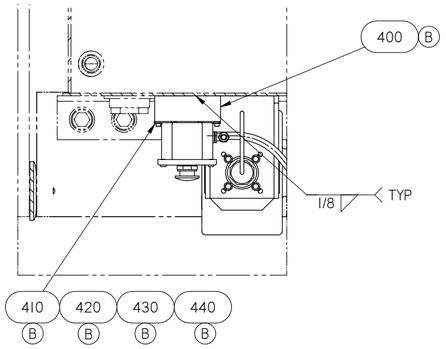

SECTION B-B

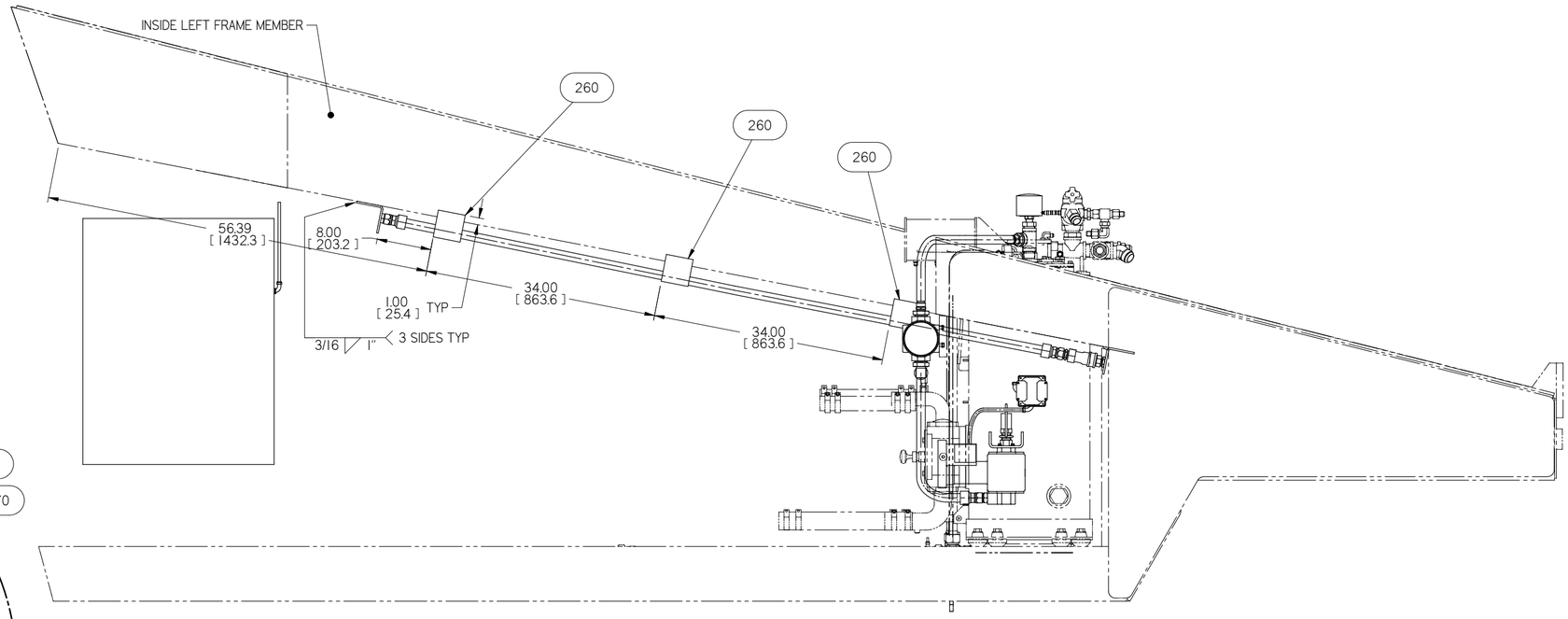

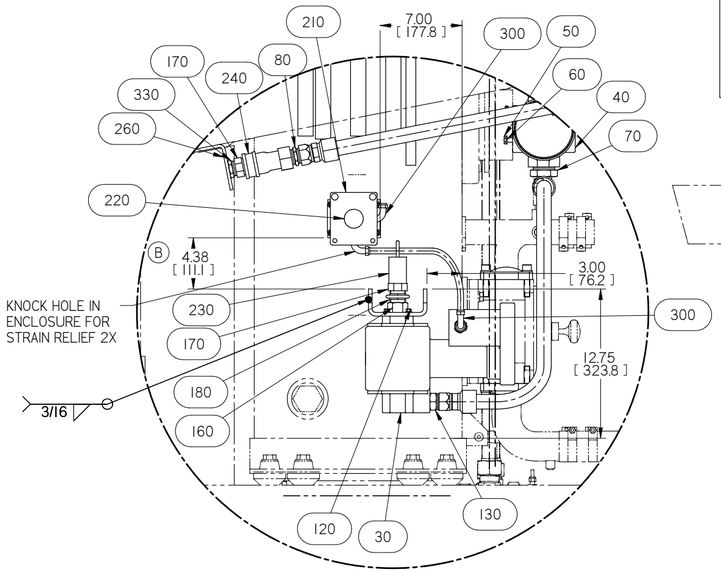

DETAIL A

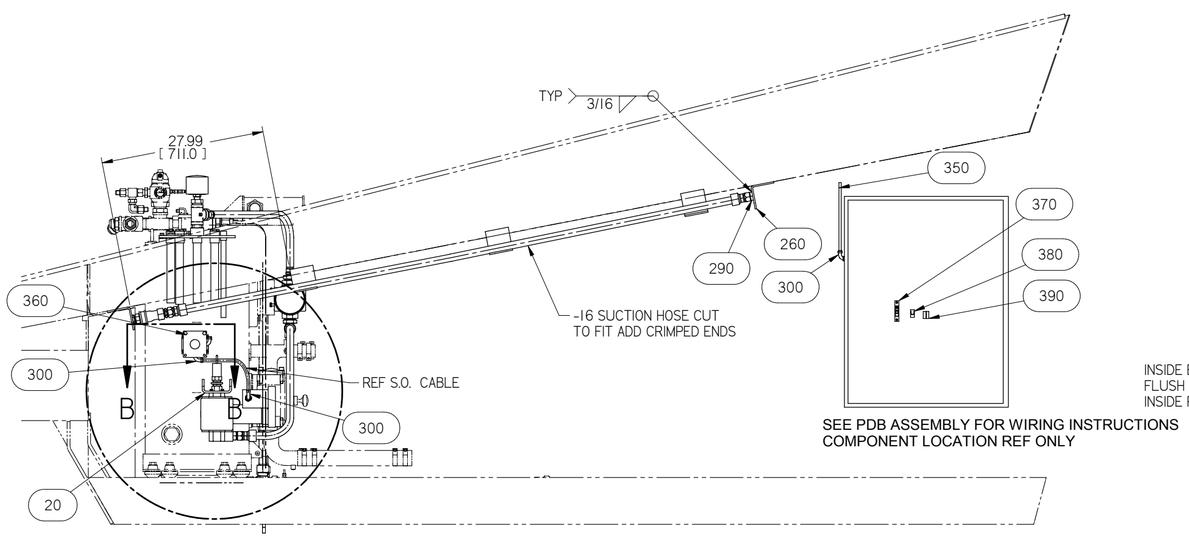

SEE PDB ASSEMBLY FOR WIRING INSTRUCTIONS
COMPONENT LOCATION REF ONLY

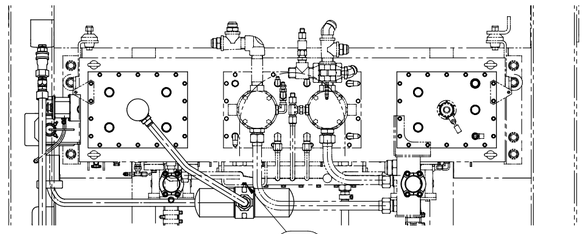

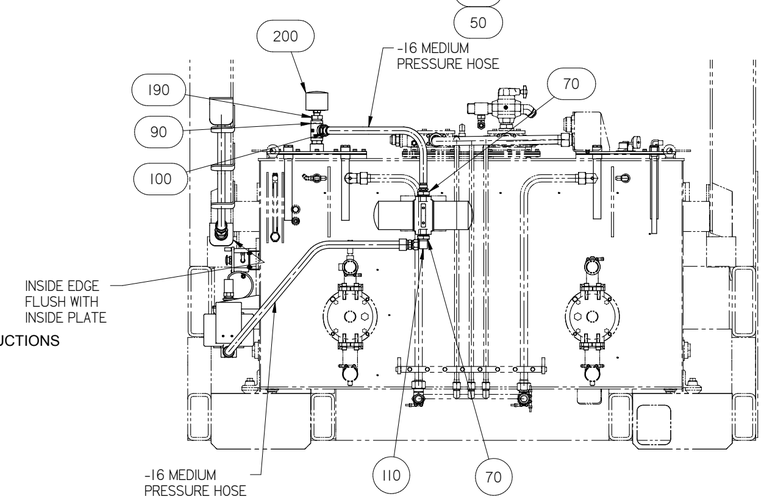

	ITEM	PART NO	QTY	DESCRIPTION
	20	3419426	1	BRACKET, TRANSFER PUMP
	30	3400138	1	PUMP MOTOR, 24 VDC
	40	0-3352002-0-11	1	INLINE FILTER
	50	F006917	2	DC-HEX HD CAP SCR 3/8-16X7/8 G
	60	F001025	2	LOCK WASHER, 3/8 SAE MED PL
	70	F023202	2	DC-STR 16FPTX24NPT
	80	F010580	2	STR 16X16NPT
	90	L425045	1	TEE
	100	F040366	1	DC-STR 16X20NPT
	110	F010685	1	DC-ELB90 16X16NPT *
	120	F040184	4	DC-HEX FLG CS 1/4-20X3/4 GR5 Z
	130	F016074	1	DC-STR 16X16SAE
	160	F022771	1	DC-STR 16FPTX16SAE
	170	L425318	2	1" QUICK DISCONNECT PLUG
	180	F015555	1	DC-STR 16NPTX16NPT
	190	L420104	1	PIPE REDUCER
	200	A1554Y01	1	BREATHER, RESERVOIR
	210	252527-1	1	ENCL.3.50X4X2.75/1STD PB
	220	4262	1	PUSH BUTTON
	230	0-3304086-0-08	1	DUST CAP, PLUG 1"
	240	F023037	1	COUPLER BODY
	260	0-1304289-0-01	5	ANGLE, BRACKET
	290	F018554	1	DC-PLG 16 HH
	300	A1278Y10	4	STRAIN RELIEF
	330	701012100	1	HEX HD PLUG
	350	F018778	20	THREE CONDUCTOR CABLE
	360	F019789	2	WIRE NUT
	370	C9678Y09	1	10 AMP DIN RAIL CB
	380	B1382Y09	1	FEEDER LUG, SIEMENS
	390	H4985Y10	1	BUSBAR SIEMENS 2 C B
B	400	4030811	1	PUSHBUTTON BOX MOUNT
B	410	150973-1	4	WASHER- PLAIN, .19
B	420	F010891	4	#10-24 NC-2 X 5/8 SHCS
B	430	F009541	4	SAE RGLR LK WH #10L1901 USE
B	440	F009542	4	HX MS NUT#10L1900-24GR2

Inch
[mm]

CONFIDENTIAL
© COPYRIGHT 2011 HARSCO. THIS DRAWING OR DOCUMENT IS THE PROPERTY OF HARSCO AND EMBODIES CONFIDENTIAL INFORMATION, TRADE SECRET INFORMATION, AND/OR KNOW-HOW THAT IS THE PROPERTY OF HARSCO. BY ACCEPTING THIS DRAWING OR DOCUMENT, THE RECIPIENT AGREES (1) NOT TO PROVIDE, OR OTHERWISE MAKE AVAILABLE, THE DRAWING OR DOCUMENT, OR ANY INFORMATION OR KNOW-HOW EMBODIED THEREIN, TO ANY THIRD PARTY AND (2) NOT TO REPRODUCE OR USE THE DRAWING OR DOCUMENT TO MANUFACTURE ANY APPARATUS OR DEVICE, WITHOUT THE PRIOR WRITTEN AUTHORIZATION OF HARSCO.

NOMINAL SIZE RANGE	INCH PLUS OR MINUS			NOMINAL SIZE RANGE	METRIC PLUS OR MINUS		
OVER	TO	1 PLACE	2 PLACE	OVER	TO	1 PLACE	2 PLACE
0	6	.03	.005	0	150	.8	.13
6	24	.04	.008	150	600	1.0	.20
24	-	.06	.010	600	-	1.5	.25

UNLESS OTHERWISE SPECIFIED ALL MACHINED SURFACES WILL HAVE:
A SURFACE FINISH OF 125 MICROINCHES CIRCULAR TOOL MARKS
CONCENTRICITY WITHIN .015

THIRD ANGLE PROJECTION

UNLESS OTHERWISE SPECIFIED, ALL WELDS SHOULD ADHERE TO THE MIDDLE TENNESSEE A.W.S WELDING STANDARDS

CHANGE	R/L	REVISION	DR	DATE
EC501006	A	RELEASE	BPA	4/27/11
EC502624	B	ADDED ITEM 400 THRU ITEM 440	BAD	01/06/12

Description: ELECTRIC TOP-UP SYSTEM

HARSCO RAIL

Material: ;
Machine Type: MKIV
Size: E
Weight: 0.0 lbm
Drawn: badler
Date Drawn: 1/6/2012
Part Number: 5007828
Sheet: 1 of 1

SOLID EDGE DRAWING
DO NOT SCALE

ENGDWGNO D4481WAB

REVISIONS							
NO	DR	DESCRIPTION	ZONE	DR	CK	APP	MF
1	8/31/	NEW RELEASE		CJW			
2	2/24/	T 6 WAS A0036002, & T-9 WAS A0369007		PJG			

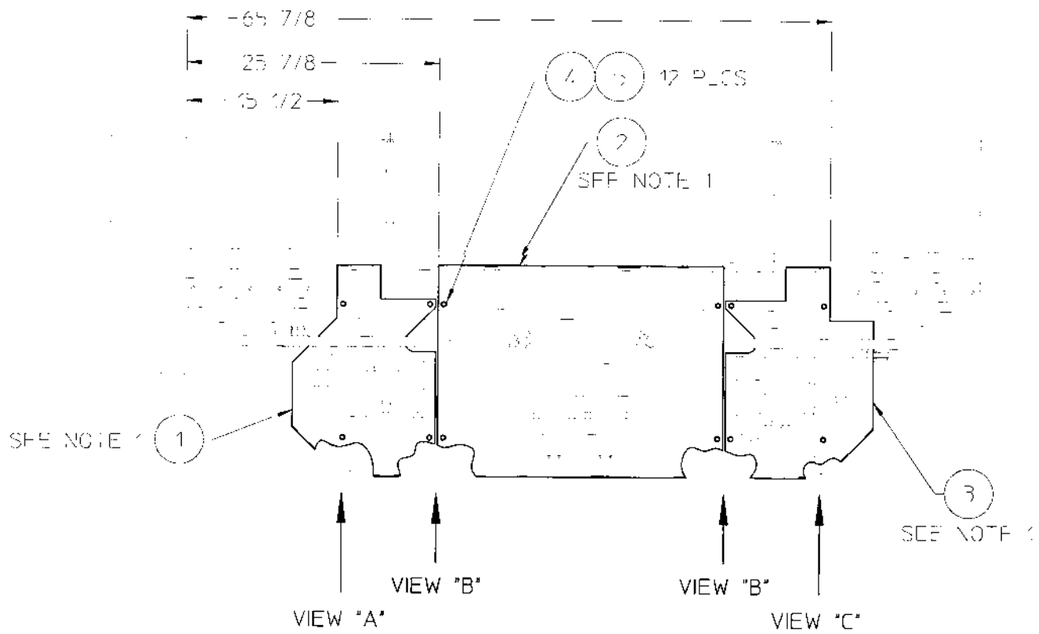

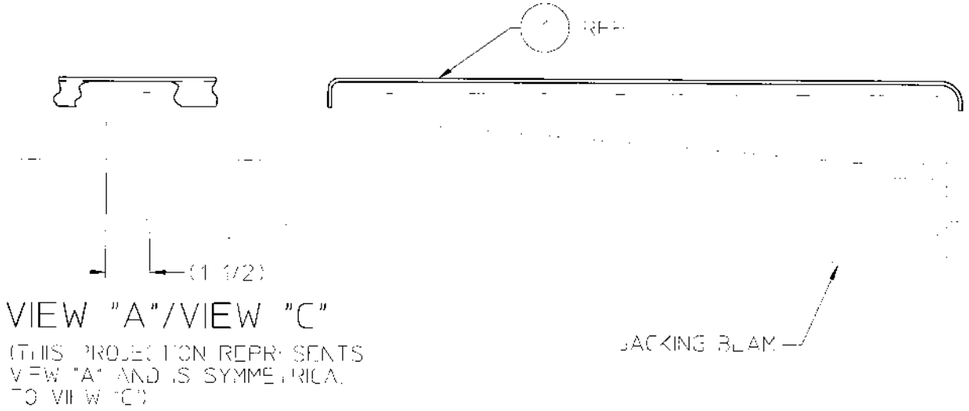

VIEW "A"/VIEW "C"

(THIS PROJECTION REPRESENTS VIEW "A" AND IS SYMMETRICAL TO VIEW "C")

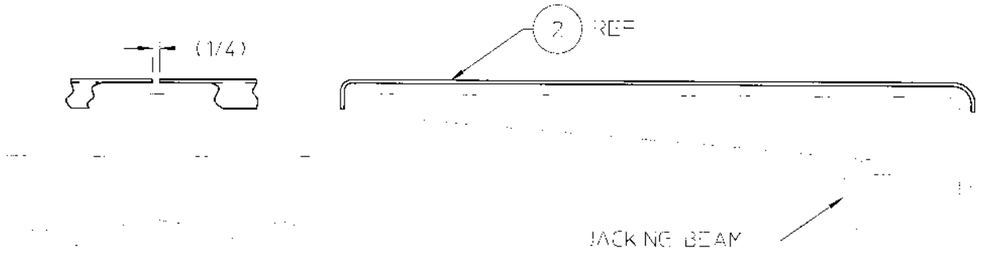

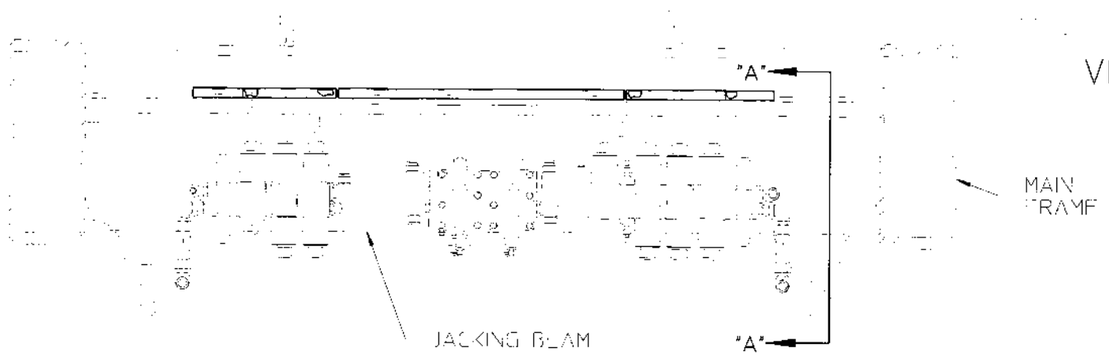

VIEW "B"

NOTE:

1. LOCATE VALVE COVERS (ITEMS 1, 2 & 3) AND MARK MOUNTING HOLE LOCATIONS. THEN DRILL AND TAP 3/8-16 HOLES IN VALVE COVER BRACKETS.

SECTION A-A

(SHOWN WITHOUT HYDRAULIC TUBING FOR CLARITY)

FIG NO	ITEM NO	PART NUMBER	DESCRIPTION AND MATERIAL SIZE (REF ONLY)	QTY
	10	D4470X02	VALVE COVER BRKT	1
	9	L40237	1/4-20 FSNA NUT	2
	8	D4454X01	VALVE COVER BRKT	1
	7	A0036008	1/4 MED LKWSHR	6
	6	A0036005	1/4-20 X 1 HCS	6
	5	A0061010	3/8 MED LKWSHR	12
	4	A0036060	3/8-16 X 5/8 HCS	12
	3	D3886X03	VALVE COVER (L)	1
	2	D3886X02	VALVE COVER (CTR)	1
	1	D3886X01	VALVE COVER (R)	1

IMPERIAL TOLERANCES
ALL DIMENSIONS ARE IN INCHES TO TRADE UNLESS OTHERWISE SPECIFIED

NOMINAL SIZE RANGE OVER	TO	PLUS OR MINUS FRACTION	2 PLACE DECIMAL	3 PLACE DECIMAL	NOMINAL SIZE RANGE OVER	TO	PLUS OR MINUS FRACTION	2 PLACE DECIMAL	3 PLACE DECIMAL
-	1	1/64	.01	.005	6	24	3/64	.03	.005
1	6	1/32	.02	.005	24		1/16	.05	.010

ANSI/AR DIMENSIONS PLUS OR MINUS 1 DEGREE

√ ALL MACHINED SURFACES TO HAVE A SURFACE FINISH OF 125 MICROINCHES UNLESS OTHERWISE SPECIFIED

WELDING SPECIFICATION

UNLESS OTHERWISE SPECIFIED ALL WELDS SHOULD ADHERE TO FAIRMONT TAMPER WELDING SPECIFICATION NO 101

WEIGHT

FIRST ANGLE PROJECTION

DO NOT SCALE

SHEET 1 OF 2

DESCRIPTION VALVE COVER KIT

DRAWN CJWolf	DATE 3-8-96	PART NO. TYPE MARK IV
CHECKED DGV	DATE 3-13-96	Fairmont Tamper 7401 Edgewood Road Box 29 Fairmont, Minnesota South Carolina 29571-0029 (803) 322-1165
SUP ENG AML	DATE 3-14-96	
APPROVED	DATE	
LAST REV 8710 1	CHECKED DVDC DATE 16-May-96	ENGDWGNO D4481WAB

THIS DOCUMENT CONTAINS PROPRIETARY INFORMATION AND SUCH INFORMATION MAY NOT BE DISCLOSED TO OTHERS FOR ANY PURPOSE OR USED FOR MANUFACTURING PURPOSES WITHOUT THE WRITTEN PERMISSION OF FAIRMONT TAMPER

HYDRAULIC PUMPS / MOTORS
REPAIR PARTS

ITEM	PART NO	DESCRIPTION	QTY
	5005833	Pump - Variable Volume Piston	1
	5009666	Pressure Compensator	1
	5009668	Flow Compensator	1
	C7376Y04	Hydraulic Gear Motor	1
	C8063Y02	Seal Kit	1
	L411545	Motor - Hydraulic	1
	Z-710456	Seal Kit	1

HYDRAULIC FILTERS
REPAIR PARTS

ITEM	PART NO	DESCRIPTION	QTY
	0-3352002-0-11	Hydraulic Filter - In-Line	1
	0-3354000-0-11	Element - Gresen	2
	0-3354000-0-15	Element - Hycon	2
	A5748Y01	Hydraulic Filter - Inline	1
	A5748Y02	Element Only	1
	B5548Y08	Hydraulic High Pressure Filter	1
	0-3354005-0-09	Element	1
	B5548Y09	Hydraulic High Pressure Filter	1
	0-3354005-0-09	Element	2
	0-3354005-0-04	Element Connector	1
	C9249Y05	Hydraulic Return Filter	1
	0-3354005-0-13	Element	1
	0-3391000-0-46	Cap O-Ring	1
	L426029	Gauge	1
	D4176Y01	Hydraulic Suction Strainer 1" NPT	1
	B5538X01	Tank Flange Weld Ring	1
	D4176Y02	Gasket	1
	D5893Y01	Gasket Cement	1
	D4176Y05	Shut-Off Valve Assembly	1
	D4176Y04	Lock Bracket Pin	1
	0-3015005-0-07	Optional Hitch Pin	1

HYDRAULIC CYLINDERS
REPAIR PARTS

ITEM	PART NO	DESCRIPTION	QTY
	340311-1	Hydraulic Cylinder	1
	240370-1	Service Kit	1
	330840-1	Hydraulic Cylinder	1
	240370-1	Service Kit	1
	A1593Y12	Hydraulic Cylinder	1
	A1593Y10	Seal Kit	1
	B5705XAB	Hydraulic Cylinder	1
	B5430YAA	Seal Kit	1
	B5705XAF	Hydraulic Cylinder	1
	B5430YAA	Seal Kit	1
	B5708XAA	Hydraulic Cylinder	1
	B5429YAA	Seal Kit	1
	B5715XAE	Hydraulic Cylinder Assembly	1
	B5715XAD	Hydraulic Cylinder	1
	B5432YAA	Seal Kit	1
	B5761XAA	Hydraulic Cylinder	1
	B5428YAA	Seal Kit	1
	B7036WAC	Hydraulic Slew Cylinder	1
	B5428YAA	Seal Kit	1
	X68297	Hydraulic Cylinder	1
	Z687107	Seal Kit	1
	X768362A	Hydraulic Cylinder	1
	Z687107	Seal Kit	1

HYDRAULIC VALVES
REPAIR PARTS

ITEM	PART NO	DESCRIPTION	QTY
	0-3333037-0-08	Solenoid Valve 4/2 D05 24 VDC	1
	C3812Y03	24V Coil	1
	0-3333037-0-09	Solenoid Valve 4/3 D02 24 VDC	1
	C3812Y03	24V Coil	2
	0-3333037-0-10	Solenoid Valve 4/2 D02 24 VDC	1
	C3812Y03	24V Coil	1
	0-3333037-0-18	Solenoid Valve 4/3 D02 24 VDC	1
	C3812Y03	24V Coil	2
	0-3333037-0-19	Solenoid Valve 4/3 D02 24 VDC	1
	C3812Y03	24V Coil	3
	158350-1	Solenoid Valve - 2 Way	1
	172274-1	24V Coil	1
	5007825	Solenoid Valve - 2 Position / 6 Way	2
	5008544	24V Coil	1
	A0730Y04	Solenoid Valve - 3 Way	1
	A1033Y03	24V Coil	1
	A1034Y01	Seal Kit	1
	A4490Y03	Solenoid Valve 4/3 D06 24 VDC	1
	C0993Y03	Pilot Solenoid Valve 4/3 D01 24VDC	1
	B4068Y15	24V Coil	2
	A4490Y07	Solenoid Valve 4/3 D06 24 VDC	1
	C0993Y03	Pilot Solenoid Valve 4/3 D01 24VDC	1
	B4068Y15	24V Coil	2
	C0993Y03	Solenoid Valve 4/3 D01 24VDC	1
	B4068Y15	24V Coil	2
	C1140Y04	Relief Valve	1
	B4068Y12	24V Coil	1

ELECTRICAL COMPONENTS

MARK IV

JUPITER II

SHEET	TITLE
TOC	Contents
1	Starting and Engine
2	24VDC Control
3	24VDC Control
4	Breakers and Power Supply
5	Equipment Options
6	Equipment Options
(I) 7	Drone System
(I) 8	Drone Wireless Camera System
J01	Can:01 Jambox
J02A	Can:02 Scanner Module
J02B	Can:02 Scanner Module
J03	Can:03 Analog Module
J04	Can:04 Digital Module
J05	Can:05 Digital Module
J06	Can:06 HDIO Module
J07	Can:07 Digital Module
J08	Can:08 Digital Module
J09	Can:09 Digital Module
J10	Can:10 Digital Module
J11	Can:11 Digital Module
J12	Can:12 Digital Module
J13	Can:13 Digital Module
J14	Can:14 Analog Module
J15	Can:15 Digital Module
J16	Can:16 Digital Module
J17	Can:17 Analog Module
J18	Can:18 Digital Module
X1	Reference
X2	Reference

LOCATION KEY	
CARR	LOCATED ON THE ENDS OF CARRIAGE
ECP	ENGINE CONTROL PANEL INSIDE OF MAIN CAB
ENGINE	ON OR CLOSE TO ENGINE
ENG_LF-S	LEFT SIDE OF ENGINE
ENG-MISC	IN THE ENGINE COMPARTMENT
ENG_RT-S	RIGHT SIDE OF ENGINE
F_DRV_AXLE	FRONT DRIVE AXLE ON REAR BOGEY
FRONT	FRONT SIDE OF MACHINE
FUEL_TK	FUEL TANK IN REAR OF MACHINE
HYD_RES	HYDRAULIC TANK IN ENGINE COMPARTMENT
LHC	LEFT HAND CONSOLE IN MAIN CAB
LF-FRT	LEFT FRONT SIDE OF MACHINE
LF_JBOX	LEFT JUNCTION BOX IN ENGINE COMPARTMENT
LF_RR	LEFT REAR SIDE OF MACHINE
LF_SIDE	LEFT SIDE OF ENGINE COMPARTMENT
MAIN_CAB	LOCATED IN MAIN CAB
MAIN_JB	MAIN JUNCTION BOX IN MAIN CAB
MCB	MAIN CONTROL BOARD INSIDE OF MAIN CAB
PDB	POWER DISTRIBUTION BOX LOCATED ON LEFT SIDE OF MACHINE
R_DRV_AXLE	REAR DRIVE AXLE ON REAR BOGEY
REAR	REAR SIDE OF MACHINE
RHC	RIGHT HAND CONSOLE IN MAIN CAB
RT-FRT	RIGHT FRONT SIDE OF MACHINE
RT-RR	RIGHT REAR SIDE OF MACHINE
RT_SIDE	RIGHT SIDE OF ENGINE COMPARTMENT
UN_H_RES	LOCATED UNDER HYDRAULIC RESEVOIR
UN_W_TANK	UNDER LEFT SIDE OF WATER TANK
WATER	WATER TANK IN ENGINE COMPARTMENT

TERMINAL BLOCK LAYOUT	
TB1-	MAIN CONTROL BOARD (MCB)
TB2-	MAIN CONTROL BOARD (MCB)
TB3-	MAIN CONTROL BOARD (MCB)
TB4-	MAIN CONTROL BOARD (MCB)
TB7-	PROJECTOR BUGGY
TB10-	ENGINE CONTROL PANEL (ECP)
TB15-	RIGHT HAND CONSOLE (RHC)
TB17-	LEFT HAND CONSOLE (LHC)
TB20-	FRONT JUNCTION BOX
TB21-	LEFT SIDE JUNCTION BOX (OPTION)
TB22-	RIGHT SIDE JUNCTION BOX (OPTION)
TB30-	POWER DISTRIBUTION BOX (PDB)
TB31-	POWER DISTRIBUTION BOX (PDB)
TB32-	POWER DISTRIBUTION BOX (PDB)

REFERENCE DOCUMENTATION	
5007950	ELECTRICAL SCHEMATIC
5007951	MAIN CONTROL BOARD (MCB) ASSEMBLY
5007952	POWER DISTROBUTION BOX (PDB) ASSEMBLY
5007953	ENGINE CONTROL PANEL (ECP) ASSEMBLY
5007954	LEFT ARMREST ASSEMBLY
5007955	RIGHT ARMREST ASSEMBLY
5007956	JUPITER SYSTEM INSTALLATION
5007957	CAB WIRING
5007958	INTERCONNECT WIRING

CONFIDENTIAL

©COPYRIGHT 2011 HARSCO. THIS DRAWING OR DOCUMENT IS THE PROPERTY OF HARSCO AND EMBODIES CONFIDENTIAL INFORMATION, TRADE SECRET INFORMATION, AND/OR KNOW-HOW THAT IS THE PROPERTY OF HARSCO. BY ACCEPTING THIS DRAWING OR DOCUMENT, THE RECIPIENT AGREES (1) NOT TO PROVIDE, OR OTHERWISE MAKE AVAILABLE, THE DRAWING OR DOCUMENT, OR ANY INFORMATION OR KNOW-HOW EMBODIED THEREIN, TO ANY THIRD PARTY AND (2) NOT TO REPRODUCE OR USE THE DRAWING OR DOCUMENT TO MANUFACTURE ANY APPARATUS OR DEVICE, WITHOUT THE PRIOR WRITTEN AUTHORIZATION OF HARSCO.

CHANGE #		REVISION	DR	DATE
EC503310	I	SEE EC FOR CHANGE DETAIL	CJW	04-05-12
EC501420	B	UPDATE AS BUILT	CJW	06/11
EC501724	C	MODIFIED PERIMETER LIGHT CIRCUIT FROM 1 CB TO 3	CJW	08/11
EC501821	D	UPDATE AS BUILT	CJW	08/11
EC502003	E	ADDED DRONE KIT, SHT 7, NEW CB SHT 4	CJW	09-22-11
EC502615	F	ADD ECM CONNECTOR, UPDATE SAT RADIO CABLE PN	CJW	01-05-12
EC502345	G	ADDED DRONE CAMERA KIT OPTION	DAS	01-09-12
EC502851	H	UPDATED JUPITER CABLES AS BUILT, SEE EC FOR CHANGE DETAIL	CJW	02-08-12

DRAWING TITLE/DESCRIPTION:
ELECTRICAL SCHEMATIC
Contents

MACHINE TYPE-MODEL:
MARK IV

E3 PROJECT FILE NAME:
MARK IV HD_10

SHEET NUMBER: TOC

NUMBER OF JUPITER SHEETS: 19

TOTAL NUMBER OF SHEETS: 30

DRAWN BY: CJW

REL. DATE: 05/11

SIZE: D

SCALE:

HARSCO RAIL

E3 DRAWING

5007950

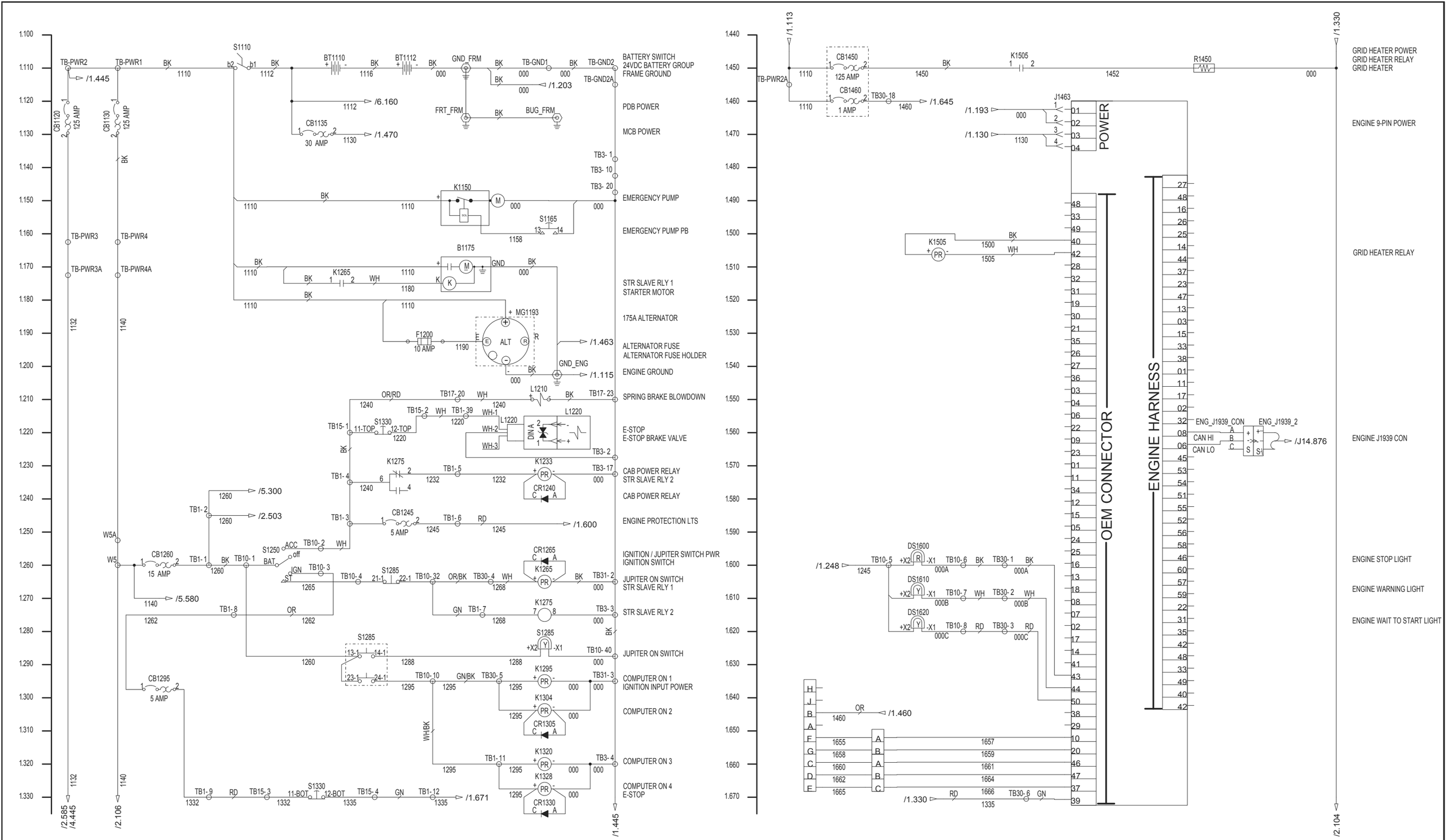

CONFIDENTIAL

©COPYRIGHT 2011 HARSCO. THIS DRAWING OR DOCUMENT IS THE PROPERTY OF HARSCO AND EMBODIES CONFIDENTIAL INFORMATION, TRADE SECRET INFORMATION, AND/OR KNOW-HOW THAT IS THE PROPERTY OF HARSCO. BY ACCEPTING THIS DRAWING OR DOCUMENT, THE RECIPIENT AGREES (1) NOT TO PROVIDE, OR OTHERWISE MAKE AVAILABLE, THE DRAWING OR DOCUMENT, OR ANY INFORMATION OR KNOW-HOW EMBODIED THEREIN, TO ANY THIRD PARTY AND (2) NOT TO REPRODUCE OR USE THE DRAWING OR DOCUMENT TO MANUFACTURE ANY APPARATUS OR DEVICE, WITHOUT THE PRIOR WRITTEN AUTHORIZATION OF HARSCO.

CHANGE #		REVISION	DR	DATE
EC503310	I	SEE EC FOR CHANGE DETAIL	CJW	04-05-12
EC501420	B	UPDATE AS BUILT	CJW	06/11
EC501724	C	MODIFIED PERIMETER LIGHT CIRCUIT FROM 1 CB TO 3	CJW	08/11
EC501821	D	UPDATE AS BUILT	CJW	08/11
EC502003	E	ADDED DRONE KIT, SHT 7, NEW CB SHT 4	CJW	09-22-11
EC502615	F	ADD ECM CONNECTOR, UPDATE SAT RADIO CABLE PN	CJW	01-05-12
EC502345	G	ADDED DRONE CAMERA KIT OPTION	DAS	01-09-12
EC502851	H	UPDATED JUPITER CABLES AS BUILT, SEE EC FOR CHANGE DETAIL	CJW	02-08-12

DRAWING TITLE/DESCRIPTION:
ELECTRICAL SCHEMATIC
Starting and Engine

MACHINE TYPE-MODEL:
MARK IV

E3 PROJECT FILE NAME:
MARK IV HD_10

SHEET NUMBER: 1
NUMBER OF JUPITER SHEETS: 19
TOTAL NUMBER OF SHEETS: 30

DRAWN BY: CJW
REL. DATE: 05/11
SIZE: D
SCALE:

HARSCO RAIL

E3 DRAWING

5007950

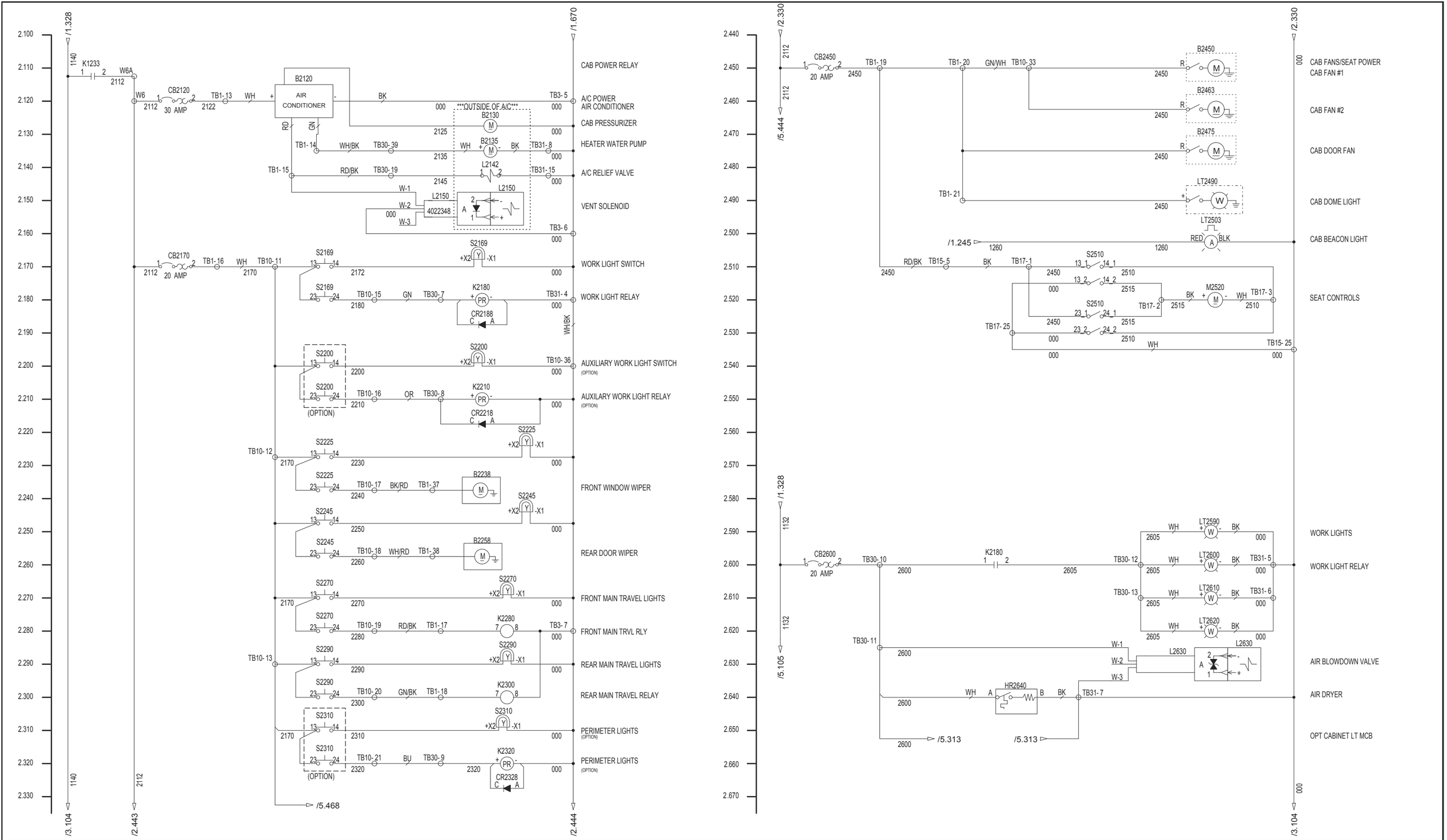

CONFIDENTIAL

©COPYRIGHT 2011 HARSCO. THIS DRAWING OR DOCUMENT IS THE PROPERTY OF HARSCO AND EMBODIES CONFIDENTIAL INFORMATION, TRADE SECRET INFORMATION, AND/OR KNOW-HOW THAT IS THE PROPERTY OF HARSCO. BY ACCEPTING THIS DRAWING OR DOCUMENT, THE RECIPIENT AGREES (1) NOT TO PROVIDE, OR OTHERWISE MAKE AVAILABLE, THE DRAWING OR DOCUMENT, OR ANY INFORMATION OR KNOW-HOW EMBODIED THEREIN, TO ANY THIRD PARTY AND (2) NOT TO REPRODUCE OR USE THE DRAWING OR DOCUMENT TO MANUFACTURE ANY APPARATUS OR DEVICE, WITHOUT THE PRIOR WRITTEN AUTHORIZATION OF HARSCO.

CHANGE #		REVISION	DR	DATE
EC503310	I	SEE EC FOR CHANGE DETAIL	CJW	04-05-12
EC501420	B	UPDATE AS BUILT	CJW	06/11
EC501724	C	MODIFIED PERIMETER LIGHT CIRCUIT FROM 1 CB TO 3	CJW	08/11
EC501821	D	UPDATE AS BUILT	CJW	08/11
EC502003	E	ADDED DRONE KIT, SHT 7, NEW CB SHT 4	CJW	09-22-11
EC502615	F	ADD ECM CONNECTOR, UPDATE SAT RADIO CABLE PN	CJW	01-05-12
EC502345	G	ADDED DRONE CAMERA KIT OPTION	DAS	01-09-12
EC502851	H	UPDATED JUPITER CABLES AS BUILT, SEE EC FOR CHANGE DETAIL	CJW	02-08-12

DRAWING TITLE/DESCRIPTION:
ELECTRICAL SCHEMATIC
24VDC Control

MACHINE TYPE-MODEL:
MARK IV

E3 PROJECT FILE NAME:
MARK IV HD_10

SHEET NUMBER: 2
NUMBER OF JUPITER SHEETS: 19
TOTAL NUMBER OF SHEETS: 30

DRAWN BY: CJW
REL. DATE: 05/11
SIZE: D
SCALE:

HARSCO RAIL

E3 DRAWING
5007950

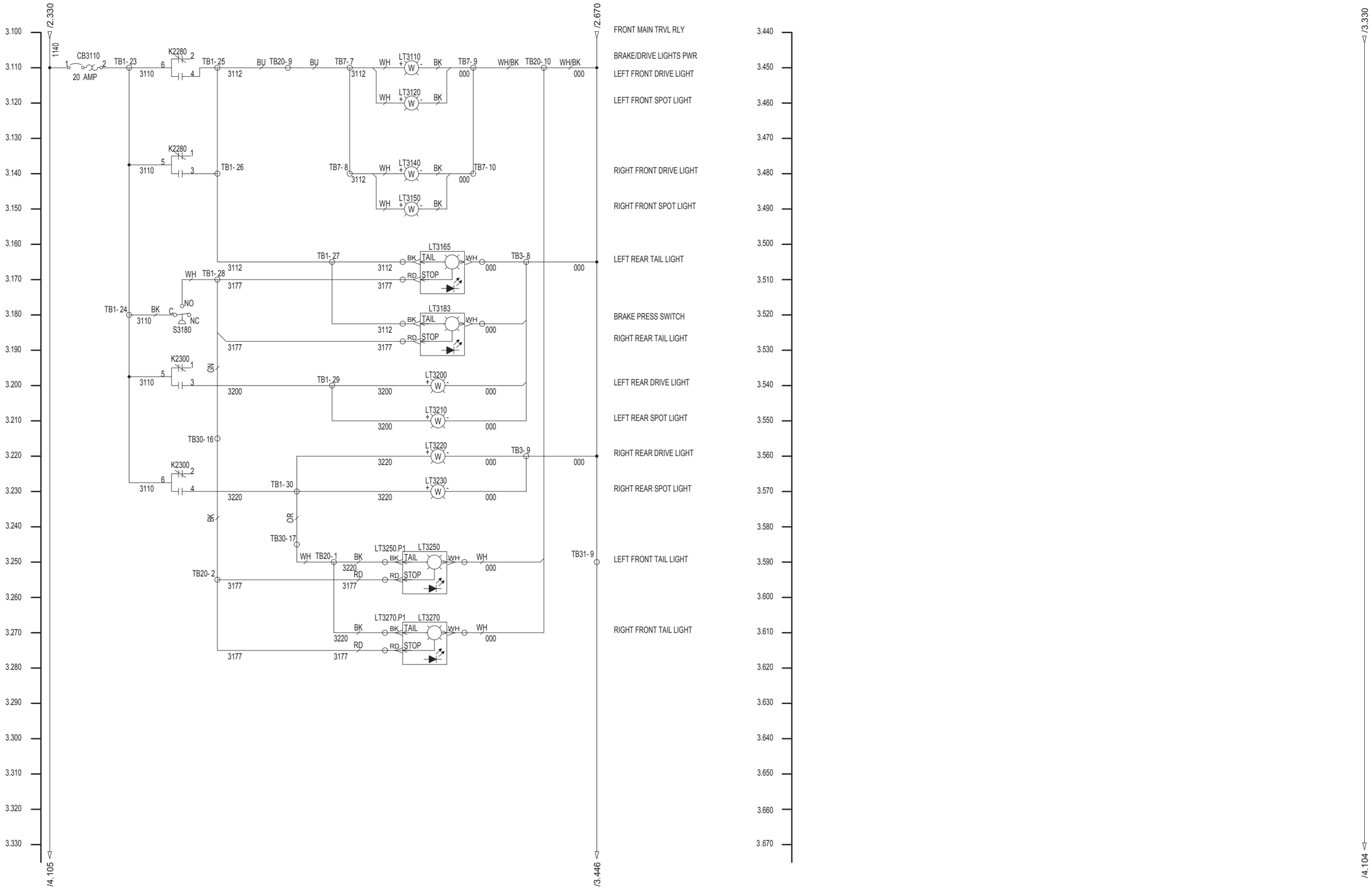

CONFIDENTIAL

©COPYRIGHT 2011 HARSCO. THIS DRAWING OR DOCUMENT IS THE PROPERTY OF HARSCO AND EMBODIES CONFIDENTIAL INFORMATION, TRADE SECRET INFORMATION, AND/OR KNOW-HOW THAT IS THE PROPERTY OF HARSCO. BY ACCEPTING THIS DRAWING OR DOCUMENT, THE RECIPIENT AGREES (1) NOT TO PROVIDE, OR OTHERWISE MAKE AVAILABLE, THE DRAWING OR DOCUMENT, OR ANY INFORMATION OR KNOW-HOW EMBODIED THEREIN, TO ANY THIRD PARTY AND (2) NOT TO REPRODUCE OR USE THE DRAWING OR DOCUMENT TO MANUFACTURE ANY APPARATUS OR DEVICE, WITHOUT THE PRIOR WRITTEN AUTHORIZATION OF HARSCO.

CHANGE #		REVISION	DR	DATE
EC503310	I	SEE EC FOR CHANGE DETAIL	CJW	04-05-12
EC501420	B	UPDATE AS BUILT	CJW	06/11
EC501724	C	MODIFIED PERIMETER LIGHT CIRCUIT FROM 1 CB TO 3	CJW	08/11
EC501821	D	UPDATE AS BUILT	CJW	08/11
EC502003	E	ADDED DRONE KIT, SHT 7, NEW CB SHT 4	CJW	09-22-11
EC502615	F	ADD ECM CONNECTOR, UPDATE SAT RADIO CABLE PN	CJW	01-05-12
EC502345	G	ADDED DRONE CAMERA KIT OPTION	DAS	01-09-12
EC502851	H	UPDATED JUPITER CABLES AS BUILT, SEE EC FOR CHANGE DETAIL	CJW	02-08-12

DRAWING TITLE/DESCRIPTION:
ELECTRICAL SCHEMATIC
24VDC Control

MACHINE TYPE-MODEL:
MARK IV

E3 PROJECT FILE NAME:
MARK IV HD_10

SHEET NUMBER: 3
NUMBER OF JUPITER SHEETS: 19
TOTAL NUMBER OF SHEETS: 30

DRAWN BY: CJW
REL. DATE: 05/11
SIZE: D
SCALE:

HARSCO RAIL

E3 DRAWING

5007950

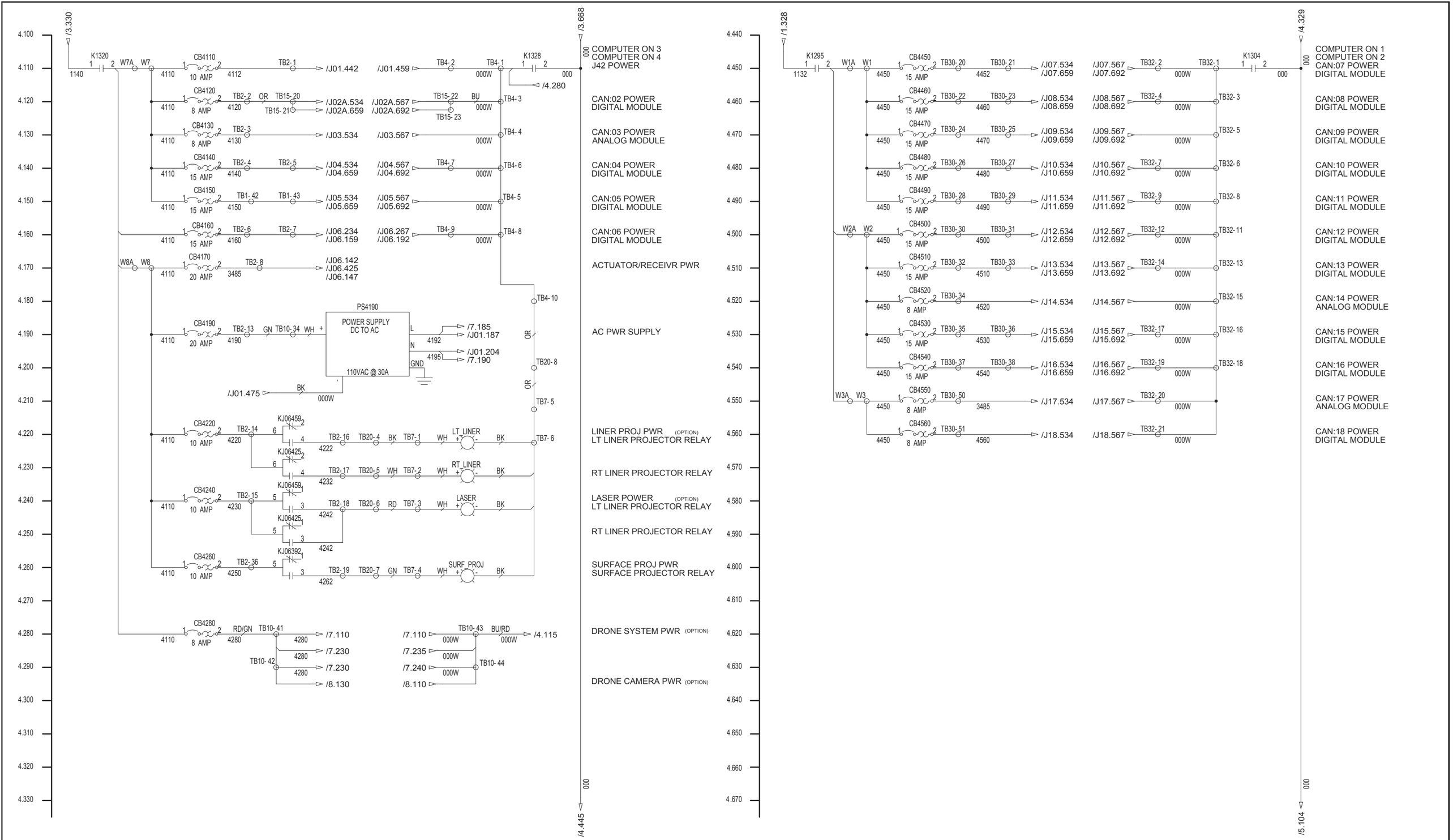

CONFIDENTIAL

©COPYRIGHT 2011 HARSCO. THIS DRAWING OR DOCUMENT IS THE PROPERTY OF HARSCO AND EMBODIES CONFIDENTIAL INFORMATION, TRADE SECRET INFORMATION, AND/OR KNOW-HOW THAT IS THE PROPERTY OF HARSCO. BY ACCEPTING THIS DRAWING OR DOCUMENT, THE RECIPIENT AGREES (1) NOT TO PROVIDE, OR OTHERWISE MAKE AVAILABLE, THE DRAWING OR DOCUMENT, OR ANY INFORMATION OR KNOW-HOW EMBODIED THEREIN, TO ANY THIRD PARTY AND (2) NOT TO REPRODUCE OR USE THE DRAWING OR DOCUMENT TO MANUFACTURE ANY APPARATUS OR DEVICE, WITHOUT THE PRIOR WRITTEN AUTHORIZATION OF HARSCO.

CHANGE #		REVISION	DR	DATE
EC503310	I	SEE EC FOR CHANGE DETAIL	CJW	04-05-12
EC501420	B	UPDATE AS BUILT	CJW	06/11
EC501724	C	MODIFIED PERIMETER LIGHT CIRCUIT FROM 1 CB TO 3	CJW	08/11
EC501821	D	UPDATE AS BUILT	CJW	08/11
EC502003	E	ADDED DRONE KIT, SHT 7, NEW CB SHT 4	CJW	09-22-11
EC502615	F	ADD ECM CONNECTOR, UPDATE SAT RADIO CABLE PN	CJW	01-05-12
EC502345	G	ADDED DRONE CAMERA KIT OPTION	DAS	01-09-12
EC502851	H	UPDATED JUPITER CABLES AS BUILT, SEE EC FOR CHANGE DETAIL	CJW	02-08-12

DRAWING TITLE/DESCRIPTION:
ELECTRICAL SCHEMATIC
Breakers and Power Supply

MACHINE TYPE-MODEL:
MARK IV

E3 PROJECT FILE NAME:
MARK IV HD_10

SHEET NUMBER: 4
NUMBER OF JUPITER SHEETS: 19
TOTAL NUMBER OF SHEETS: 30

DRAWN BY: CJW
REL. DATE: 05/11
SIZE: D
SCALE:

HARSCO RAIL

E3 DRAWING
5007950

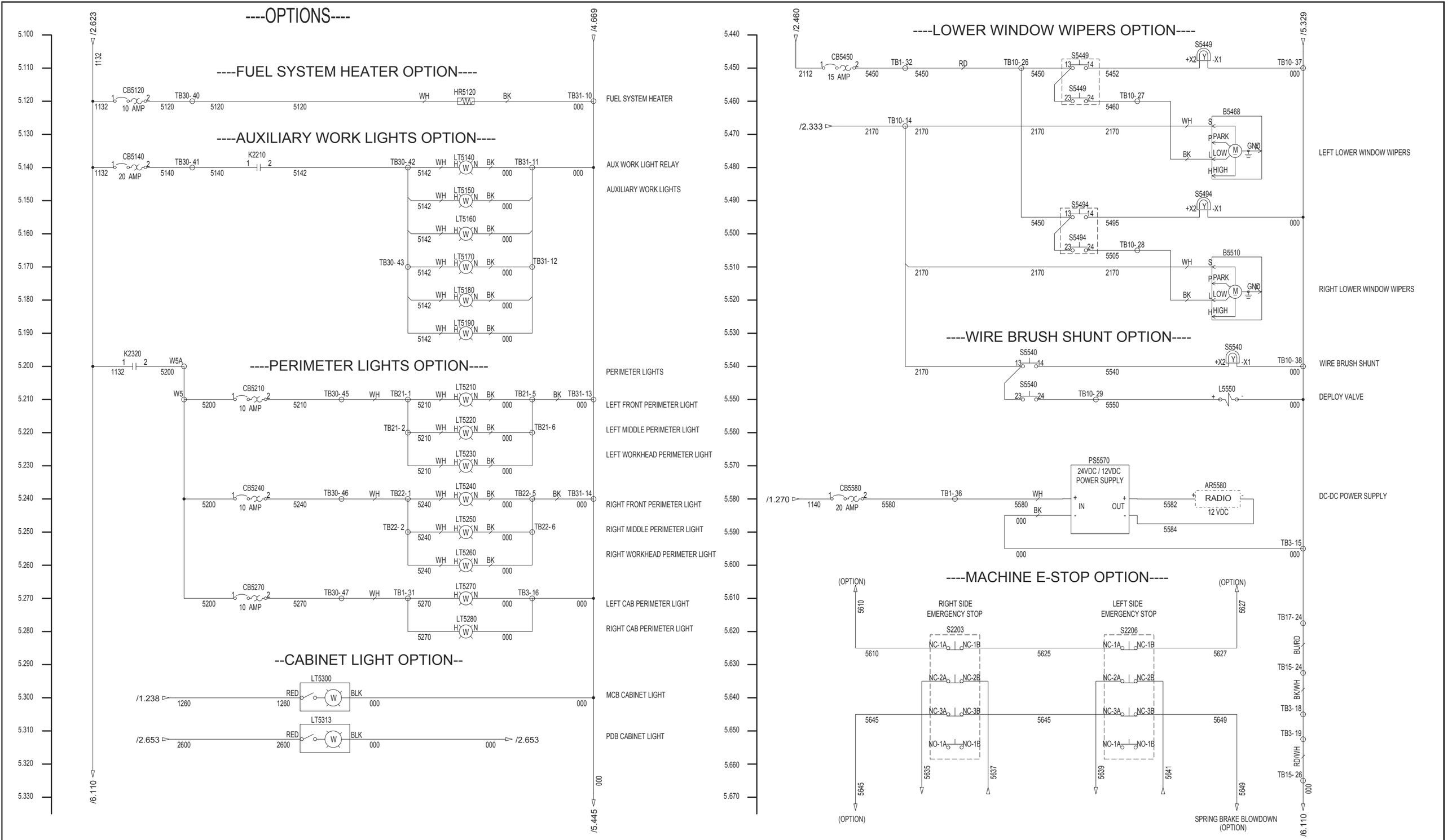

CONFIDENTIAL

©COPYRIGHT 2011 HARSCO. THIS DRAWING OR DOCUMENT IS THE PROPERTY OF HARSCO AND EMBODIES CONFIDENTIAL INFORMATION, TRADE SECRET INFORMATION, AND/OR KNOW-HOW THAT IS THE PROPERTY OF HARSCO. BY ACCEPTING THIS DRAWING OR DOCUMENT, THE RECIPIENT AGREES (1) NOT TO PROVIDE, OR OTHERWISE MAKE AVAILABLE, THE DRAWING OR DOCUMENT, OR ANY INFORMATION OR KNOW-HOW EMBODIED THEREIN, TO ANY THIRD PARTY AND (2) NOT TO REPRODUCE OR USE THE DRAWING OR DOCUMENT TO MANUFACTURE ANY APPARATUS OR DEVICE, WITHOUT THE PRIOR WRITTEN AUTHORIZATION OF HARSCO.

CHANGE #		REVISION	DR	DATE
EC503310	I	SEE EC FOR CHANGE DETAIL	CJW	04-05-12
EC501420	B	UPDATE AS BUILT	CJW	06/11
EC501724	C	MODIFIED PERIMETER LIGHT CIRCUIT FROM 1 CB TO 3	CJW	08/11
EC501821	D	UPDATE AS BUILT	CJW	08/11
EC502003	E	ADDED DRONE KIT, SHT 7, NEW CB SHT 4	CJW	09-22-11
EC502615	F	ADD ECM CONNECTOR, UPDATE SAT RADIO CABLE PN	CJW	01-05-12
EC502345	G	ADDED DRONE CAMERA KIT OPTION	DAS	01-09-12
EC502851	H	UPDATED JUPITER CABLES AS BUILT, SEE EC FOR CHANGE DETAIL	CJW	02-08-12

DRAWING TITLE/DESCRIPTION:
ELECTRICAL SCHEMATIC
Equipment Options

MACHINE TYPE-MODEL:
MARK IV

E3 PROJECT FILE NAME:
MARK IV HD_10

SHEET NUMBER: 5
NUMBER OF JUPITER SHEETS: 19
TOTAL NUMBER OF SHEETS: 30

DRAWN BY: CJW
REL. DATE: 05/11
SIZE: D
SCALE:

HARSCO RAIL

E3 DRAWING

5007950

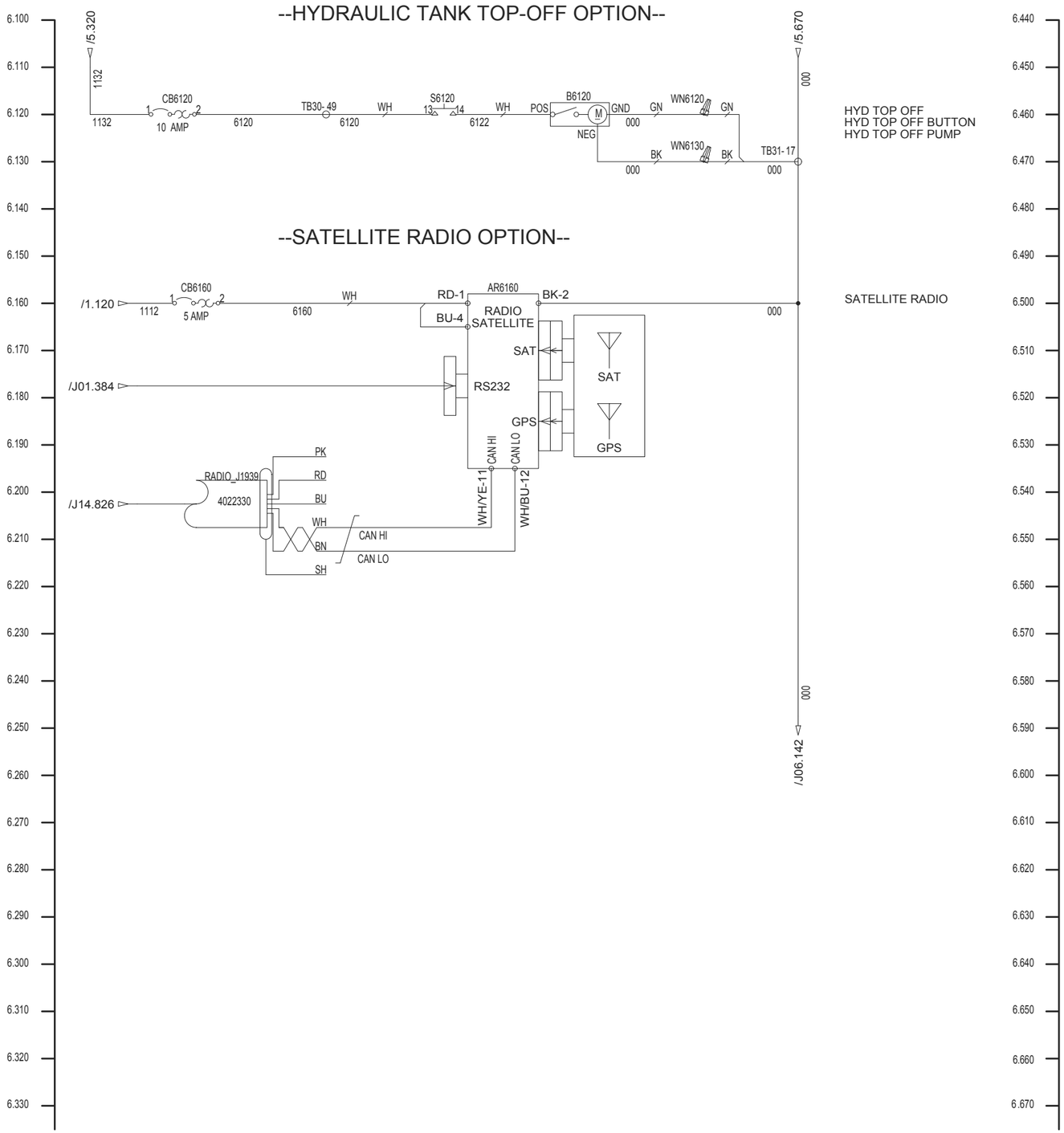

CONFIDENTIAL

©COPYRIGHT 2011 HARSCO. THIS DRAWING OR DOCUMENT IS THE PROPERTY OF HARSCO AND EMBODIES CONFIDENTIAL INFORMATION, TRADE SECRET INFORMATION, AND/OR KNOW-HOW THAT IS THE PROPERTY OF HARSCO. BY ACCEPTING THIS DRAWING OR DOCUMENT, THE RECIPIENT AGREES (1) NOT TO PROVIDE, OR OTHERWISE MAKE AVAILABLE, THE DRAWING OR DOCUMENT, OR ANY INFORMATION OR KNOW-HOW EMBODIED THEREIN, TO ANY THIRD PARTY AND (2) NOT TO REPRODUCE OR USE THE DRAWING OR DOCUMENT TO MANUFACTURE ANY APPARATUS OR DEVICE, WITHOUT THE PRIOR WRITTEN AUTHORIZATION OF HARSCO.

CHANGE #		REVISION	DR	DATE
EC503310	I	SEE EC FOR CHANGE DETAIL	CJW	04-05-12
EC501420	B	UPDATE AS BUILT	CJW	06/11
EC501724	C	MODIFIED PERIMETER LIGHT CIRCUIT FROM 1 CB TO 3	CJW	08/11
EC501821	D	UPDATE AS BUILT	CJW	08/11
EC502003	E	ADDED DRONE KIT, SHT 7, NEW CB SHT 4	CJW	09-22-11
EC502615	F	ADD ECM CONNECTOR, UPDATE SAT RADIO CABLE PN	CJW	01-05-12
EC502345	G	ADDED DRONE CAMERA KIT OPTION	DAS	01-09-12
EC502851	H	UPDATED JUPITER CABLES AS BUILT, SEE EC FOR CHANGE DETAIL	CJW	02-08-12

DRAWING TITLE/DESCRIPTION:
ELECTRICAL SCHEMATIC
Equipment Options

MACHINE TYPE-MODEL:
MARK IV

E3 PROJECT FILE NAME:
MARK IV HD_10

SHEET NUMBER: 6
NUMBER OF JUPITER SHEETS: 19
TOTAL NUMBER OF SHEETS: 30

DRAWN BY: CJW
REL. DATE: 05/11
SIZE: D
SCALE:

HARSCO RAIL

E3 DRAWING
5007950

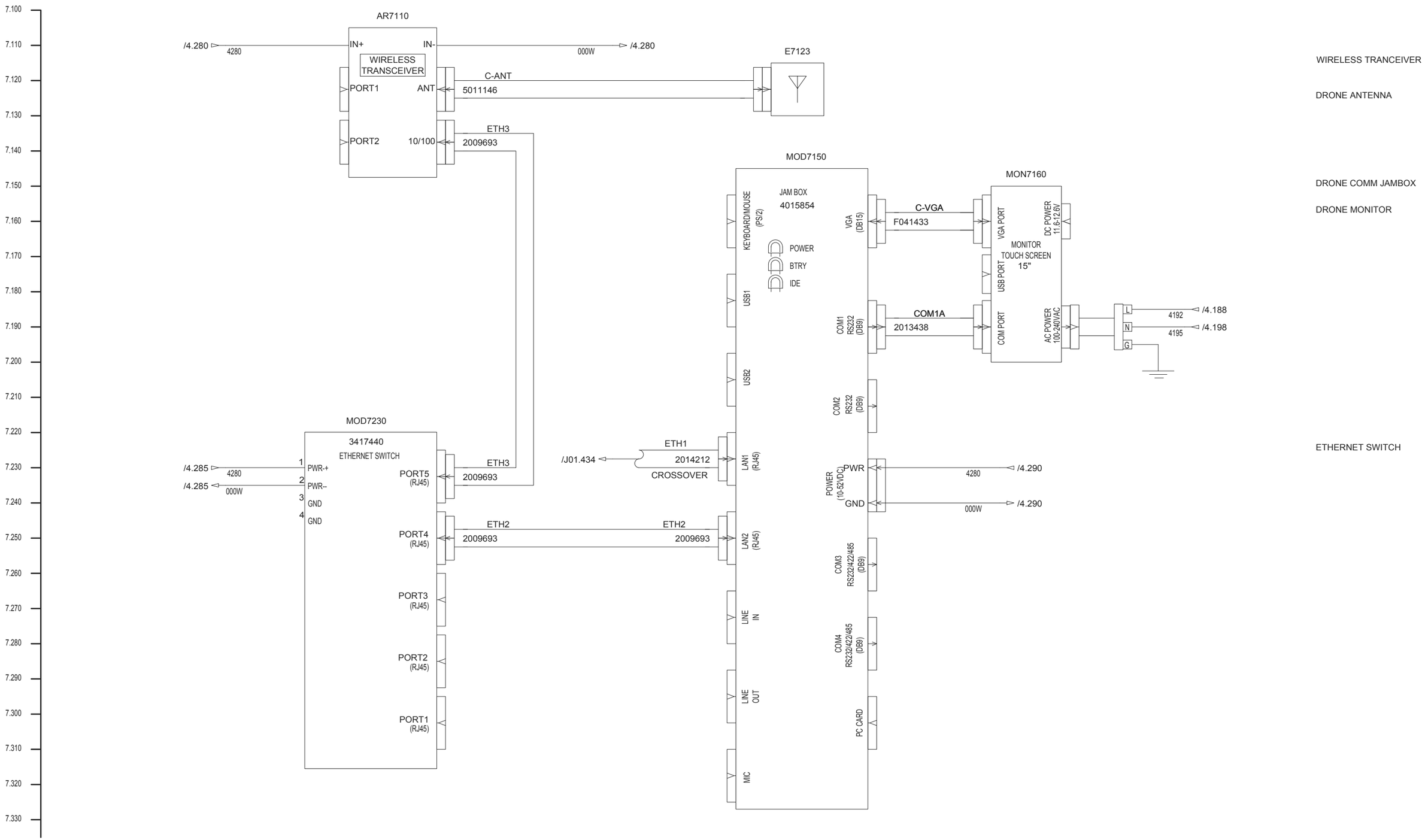

CONFIDENTIAL

©COPYRIGHT 2011 HARSCO. THIS DRAWING OR DOCUMENT IS THE PROPERTY OF HARSCO AND EMBODIES CONFIDENTIAL INFORMATION, TRADE SECRET INFORMATION, AND/OR KNOW-HOW THAT IS THE PROPERTY OF HARSCO. BY ACCEPTING THIS DRAWING OR DOCUMENT, THE RECIPIENT AGREES (1) NOT TO PROVIDE, OR OTHERWISE MAKE AVAILABLE, THE DRAWING OR DOCUMENT, OR ANY INFORMATION OR KNOW-HOW EMBODIED THEREIN, TO ANY THIRD PARTY AND (2) NOT TO REPRODUCE OR USE THE DRAWING OR DOCUMENT TO MANUFACTURE ANY APPARATUS OR DEVICE, WITHOUT THE PRIOR WRITTEN AUTHORIZATION OF HARSCO.

CHANGE #		REVISION	DR	DATE
EC503310	I	SEE EC FOR CHANGE DETAIL	CJW	04-05-12
EC501420	B	UPDATE AS BUILT	CJW	06/11
EC501724	C	MODIFIED PERIMETER LIGHT CIRCUIT FROM 1 CB TO 3	CJW	08/11
EC501821	D	UPDATE AS BUILT	CJW	08/11
EC502003	E	ADDED DRONE KIT, SHT 7, NEW CB SHT 4	CJW	09-22-11
EC502615	F	ADD ECM CONNECTOR, UPDATE SAT RADIO CABLE PN	CJW	01-05-12
EC502345	G	ADDED DRONE CAMERA KIT OPTION	DAS	01-09-12
EC502851	H	UPDATED JUPITER CABLES AS BUILT, SEE EC FOR CHANGE DETAIL	CJW	02-08-12

DRAWING TITLE/DESCRIPTION:
ELECTRICAL SCHEMATIC
Drone System

MACHINE TYPE-MODEL:
MARK IV

E3 PROJECT FILE NAME:
MARK IV HD_10

SHEET NUMBER: 7
NUMBER OF JUPITER SHEETS: 19
TOTAL NUMBER OF SHEETS: 30

DRAWN BY: CJW
REL. DATE: 05/11
SIZE: D
SCALE:

HARSCO RAIL

E3 DRAWING
5007950

--DRONE CAMERA SYSTEM OPTION--

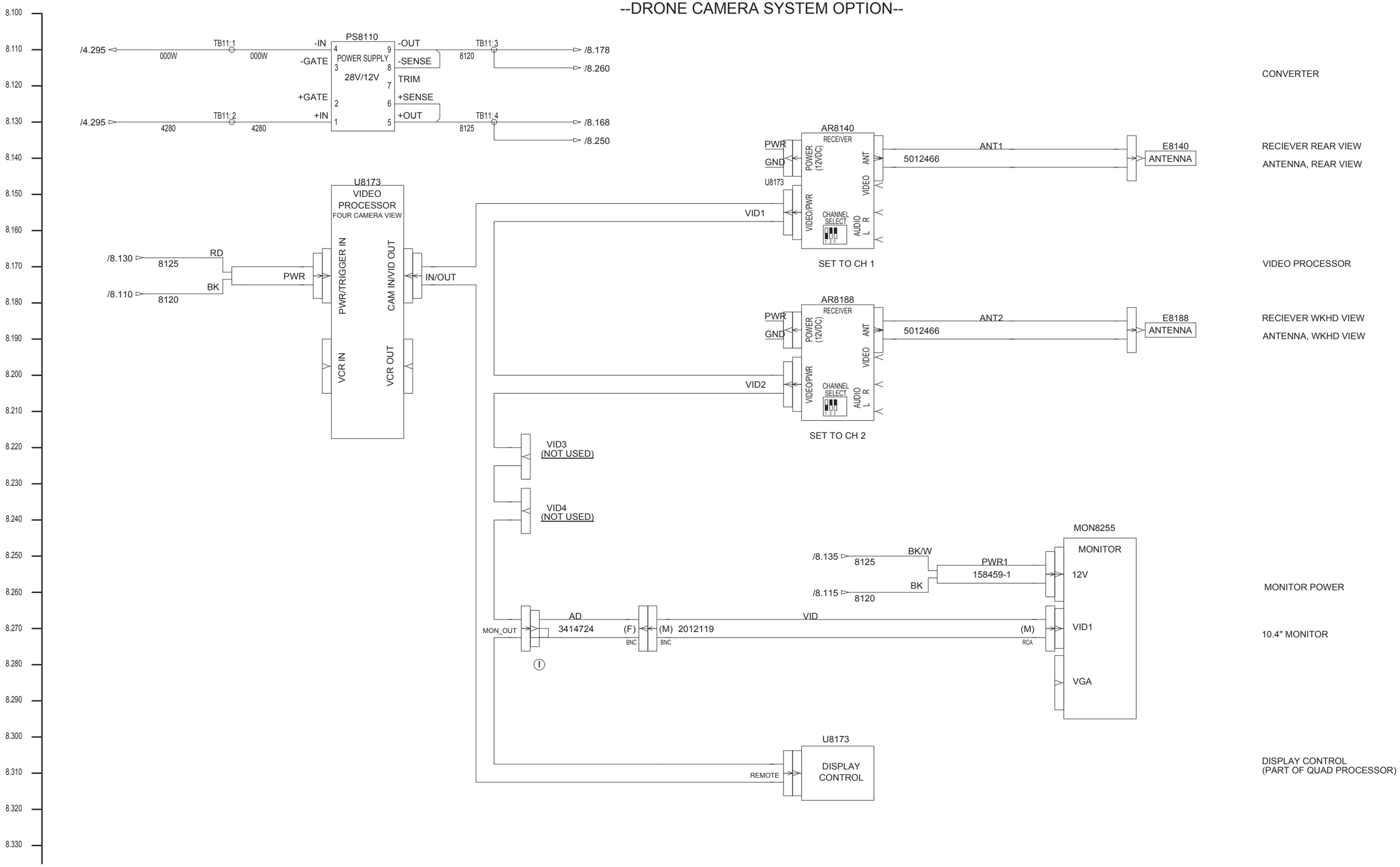

CONFIDENTIAL

©COPYRIGHT 2011 HARSCO. THIS DRAWING OR DOCUMENT IS THE PROPERTY OF HARSCO AND EMBODIES CONFIDENTIAL INFORMATION, TRADE SECRET INFORMATION, AND/OR KNOW-HOW THAT IS THE PROPERTY OF HARSCO. BY ACCEPTING THIS DRAWING OR DOCUMENT, THE RECIPIENT AGREES (1) NOT TO PROVIDE, OR OTHERWISE MAKE AVAILABLE, THE DRAWING OR DOCUMENT, OR ANY INFORMATION OR KNOW-HOW EMBODIED THEREIN, TO ANY THIRD PARTY AND (2) NOT TO REPRODUCE OR USE THE DRAWING OR DOCUMENT TO MANUFACTURE ANY APPARATUS OR DEVICE, WITHOUT THE PRIOR WRITTEN AUTHORIZATION OF HARSCO.

CHANGE #		REVISION	DR	DATE
EC503310	I	SEE EC FOR CHANGE DETAIL	CJW	04-05-12
EC501420	B	UPDATE AS BUILT	CJW	06/11
EC501724	C	MODIFIED PERIMETER LIGHT CIRCUIT FROM 1 CB TO 3	CJW	08/11
EC501821	D	UPDATE AS BUILT	CJW	08/11
EC502003	E	ADDED DRONE KIT, SHT 7, NEW CB SHT 4	CJW	09-22-11
EC502615	F	ADD ECM CONNECTOR, UPDATE SAT RADIO CABLE PN	CJW	01-05-12
EC502345	G	ADDED DRONE CAMERA KIT OPTION	DAS	01-09-12
EC502851	H	UPDATED JUPITER CABLES AS BUILT, SEE EC FOR CHANGE DETAIL	CJW	02-08-12

DRAWING TITLE/DESCRIPTION:
ELECTRICAL SCHEMATIC
Drone Wireless Camera System

MACHINE TYPE-MODEL:
MARK IV

E3 PROJECT FILE NAME:
MARK IV HD_10

SHEET NUMBER: 8
NUMBER OF JUPITER SHEETS: 19
TOTAL NUMBER OF SHEETS: 30

DRAWN BY: CJW
REL. DATE: 05/11
SIZE: D
SCALE:

HARSCO RAIL

E3 DRAWING
5007950

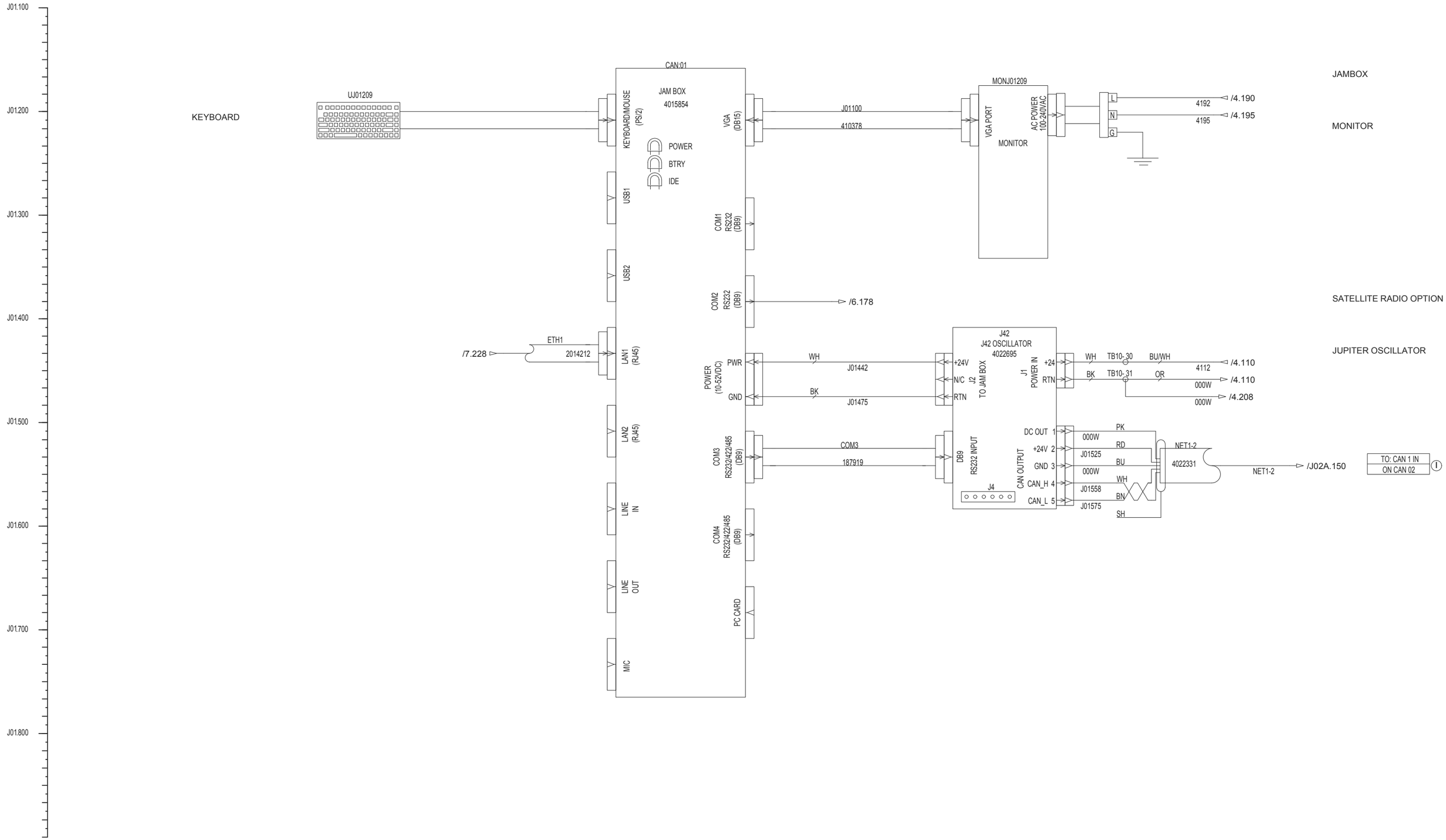

CONFIDENTIAL

©COPYRIGHT 2011 HARSCO. THIS DRAWING OR DOCUMENT IS THE PROPERTY OF HARSCO AND EMBODIES CONFIDENTIAL INFORMATION, TRADE SECRET INFORMATION, AND/OR KNOW-HOW THAT IS THE PROPERTY OF HARSCO. BY ACCEPTING THIS DRAWING OR DOCUMENT, THE RECIPIENT AGREES (1) NOT TO PROVIDE, OR OTHERWISE MAKE AVAILABLE, THE DRAWING OR DOCUMENT, OR ANY INFORMATION OR KNOW-HOW EMBODIED THEREIN, TO ANY THIRD PARTY AND (2) NOT TO REPRODUCE OR USE THE DRAWING OR DOCUMENT TO MANUFACTURE ANY APPARATUS OR DEVICE, WITHOUT THE PRIOR WRITTEN AUTHORIZATION OF HARSCO.

CHANGE #		REVISION	DR	DATE
EC503310	I	SEE EC FOR CHANGE DETAIL	CJW	04-05-12
EC501420	B	UPDATE AS BUILT	CJW	06/11
EC501724	C	MODIFIED PERIMETER LIGHT CIRCUIT FROM 1 CB TO 3	CJW	08/11
EC501821	D	UPDATE AS BUILT	CJW	08/11
EC502003	E	ADDED DRONE KIT, SHT 7, NEW CB SHT 4	CJW	09-22-11
EC502615	F	ADD ECM CONNECTOR, UPDATE SAT RADIO CABLE PN	CJW	01-05-12
EC502345	G	ADDED DRONE CAMERA KIT OPTION	DAS	01-09-12
EC502851	H	UPDATED JUPITER CABLES AS BUILT, SEE EC FOR CHANGE DETAIL	CJW	02-08-12

DRAWING TITLE/DESCRIPTION:
ELECTRICAL SCHEMATIC
Can:01 Jambox

MACHINE TYPE-MODEL:
MARK IV

E3 PROJECT FILE NAME:
MARK IV HD_10

SHEET NUMBER: J01
NUMBER OF JUPITER SHEETS: 19
TOTAL NUMBER OF SHEETS: 30

DRAWN BY: CJW
REL. DATE: 05/11
SIZE: D
SCALE:

HARSCO RAIL

E3 DRAWING

5007950

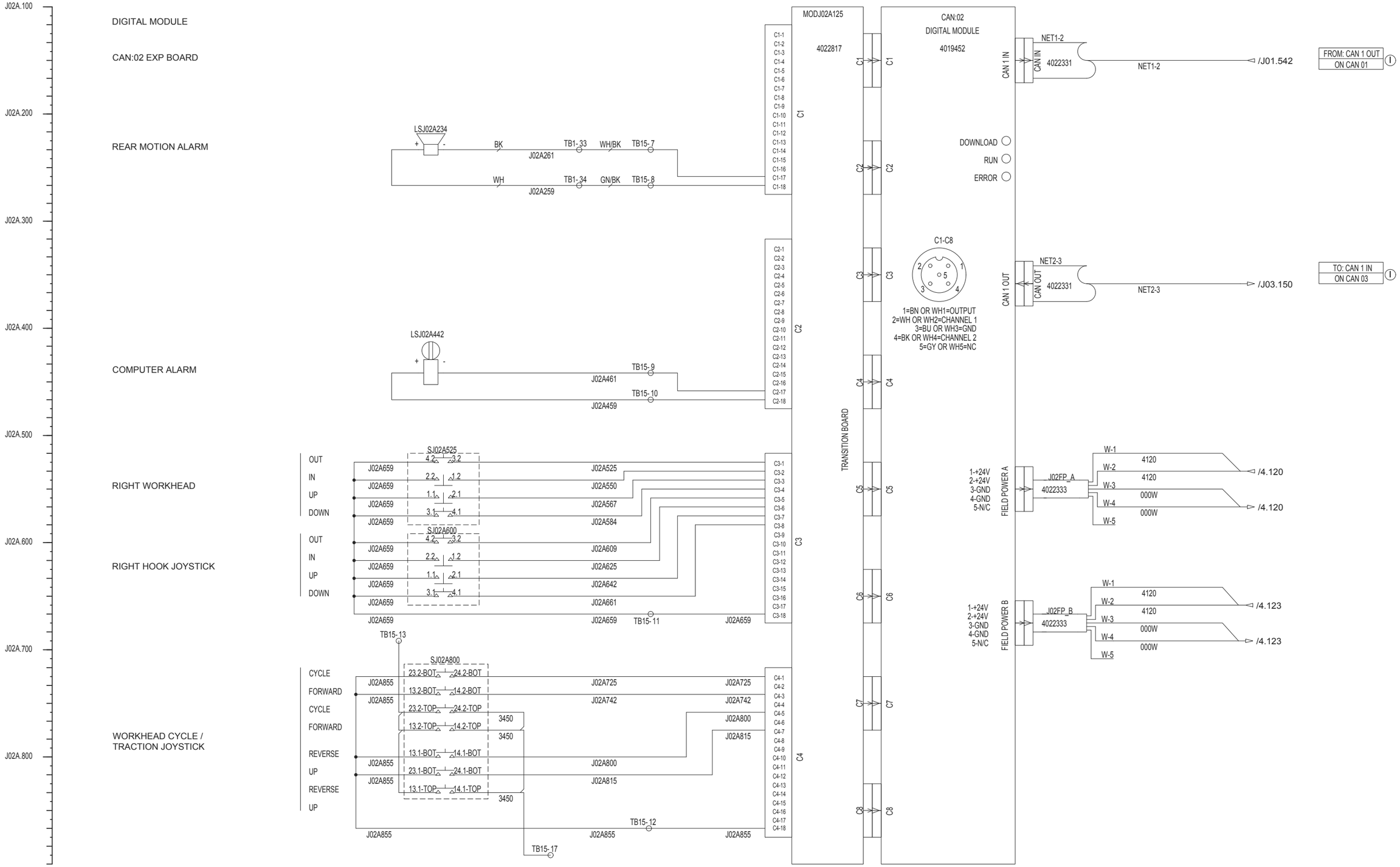

CONFIDENTIAL

©COPYRIGHT 2011 HARSCO. THIS DRAWING OR DOCUMENT IS THE PROPERTY OF HARSCO AND EMBODIES CONFIDENTIAL INFORMATION, TRADE SECRET INFORMATION, AND/OR KNOW-HOW THAT IS THE PROPERTY OF HARSCO. BY ACCEPTING THIS DRAWING OR DOCUMENT, THE RECIPIENT AGREES (1) NOT TO PROVIDE, OR OTHERWISE MAKE AVAILABLE, THE DRAWING OR DOCUMENT, OR ANY INFORMATION OR KNOW-HOW EMBODIED THEREIN, TO ANY THIRD PARTY AND (2) NOT TO REPRODUCE OR USE THE DRAWING OR DOCUMENT TO MANUFACTURE ANY APPARATUS OR DEVICE, WITHOUT THE PRIOR WRITTEN AUTHORIZATION OF HARSCO.

CHANGE #		REVISION	DR	DATE
EC503310	I	SEE EC FOR CHANGE DETAIL	CJW	04-05-12
EC501420	B	UPDATE AS BUILT	CJW	06/11
EC501724	C	MODIFIED PERIMETER LIGHT CIRCUIT FROM 1 CB TO 3	CJW	08/11
EC501821	D	UPDATE AS BUILT	CJW	08/11
EC502003	E	ADDED DRONE KIT, SHT 7, NEW CB SHT 4	CJW	09-22-11
EC502615	F	ADD ECM CONNECTOR, UPDATE SAT RADIO CABLE PN	CJW	01-05-12
EC502345	G	ADDED DRONE CAMERA KIT OPTION	DAS	01-09-12
EC502851	H	UPDATED JUPITER CABLES AS BUILT, SEE EC FOR CHANGE DETAIL	CJW	02-08-12

DRAWING TITLE/DESCRIPTION:
ELECTRICAL SCHEMATIC
Can:02 Scanner Module

MACHINE TYPE-MODEL:
MARK IV

E3 PROJECT FILE NAME:
MARK IV HD_10

SHEET NUMBER: J02A
NUMBER OF JUPITER SHEETS: 19
TOTAL NUMBER OF SHEETS: 30

DRAWN BY: CJW
REL. DATE: 05/11
SIZE: D
SCALE:

HARSCO RAIL

E3 DRAWING
5007950

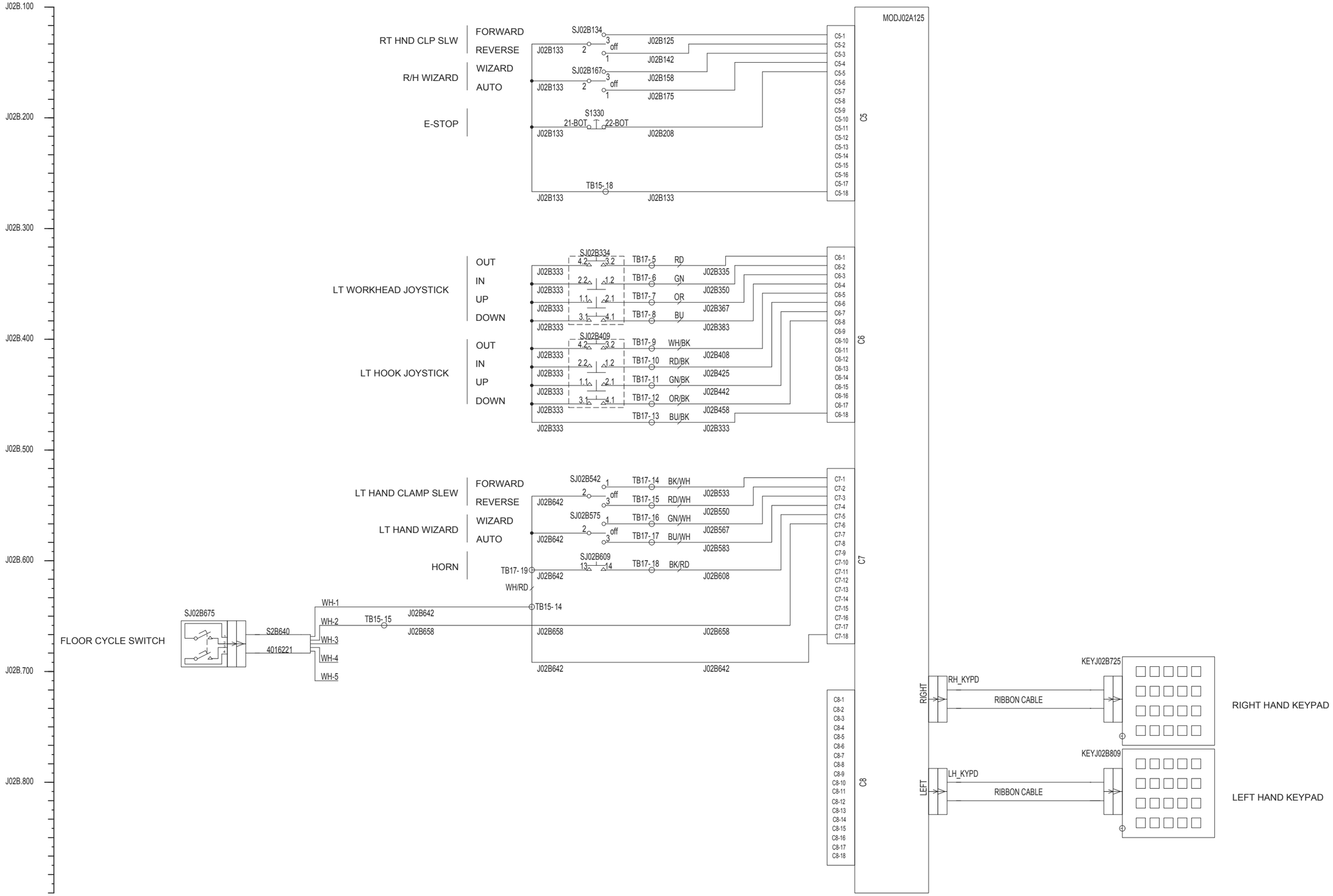

CONFIDENTIAL

©COPYRIGHT 2011 HARSCO. THIS DRAWING OR DOCUMENT IS THE PROPERTY OF HARSCO AND EMBODIES CONFIDENTIAL INFORMATION, TRADE SECRET INFORMATION, AND/OR KNOW-HOW THAT IS THE PROPERTY OF HARSCO. BY ACCEPTING THIS DRAWING OR DOCUMENT, THE RECIPIENT AGREES (1) NOT TO PROVIDE, OR OTHERWISE MAKE AVAILABLE, THE DRAWING OR DOCUMENT, OR ANY INFORMATION OR KNOW-HOW EMBODIED THEREIN, TO ANY THIRD PARTY AND (2) NOT TO REPRODUCE OR USE THE DRAWING OR DOCUMENT TO MANUFACTURE ANY APPARATUS OR DEVICE, WITHOUT THE PRIOR WRITTEN AUTHORIZATION OF HARSCO.

CHANGE #		REVISION	DR	DATE
EC503310	I	SEE EC FOR CHANGE DETAIL	CJW	04-05-12
EC501420	B	UPDATE AS BUILT	CJW	06/11
EC501724	C	MODIFIED PERIMETER LIGHT CIRCUIT FROM 1 CB TO 3	CJW	08/11
EC501821	D	UPDATE AS BUILT	CJW	08/11
EC502003	E	ADDED DRONE KIT, SHT 7, NEW CB SHT 4	CJW	09-22-11
EC502615	F	ADD ECM CONNECTOR, UPDATE SAT RADIO CABLE PN	CJW	01-05-12
EC502345	G	ADDED DRONE CAMERA KIT OPTION	DAS	01-09-12
EC502851	H	UPDATED JUPITER CABLES AS BUILT, SEE EC FOR CHANGE DETAIL	CJW	02-08-12

DRAWING TITLE/DESCRIPTION:
ELECTRICAL SCHEMATIC
Can:02 Scanner Module

MACHINE TYPE-MODEL:
MARK IV

E3 PROJECT FILE NAME:
MARK IV HD_10

SHEET NUMBER: J02B
NUMBER OF JUPITER SHEETS: 19
TOTAL NUMBER OF SHEETS: 30

DRAWN BY: CJW
REL. DATE: 05/11
SIZE: D
SCALE:

HARSCO RAIL

E3 DRAWING
5007950

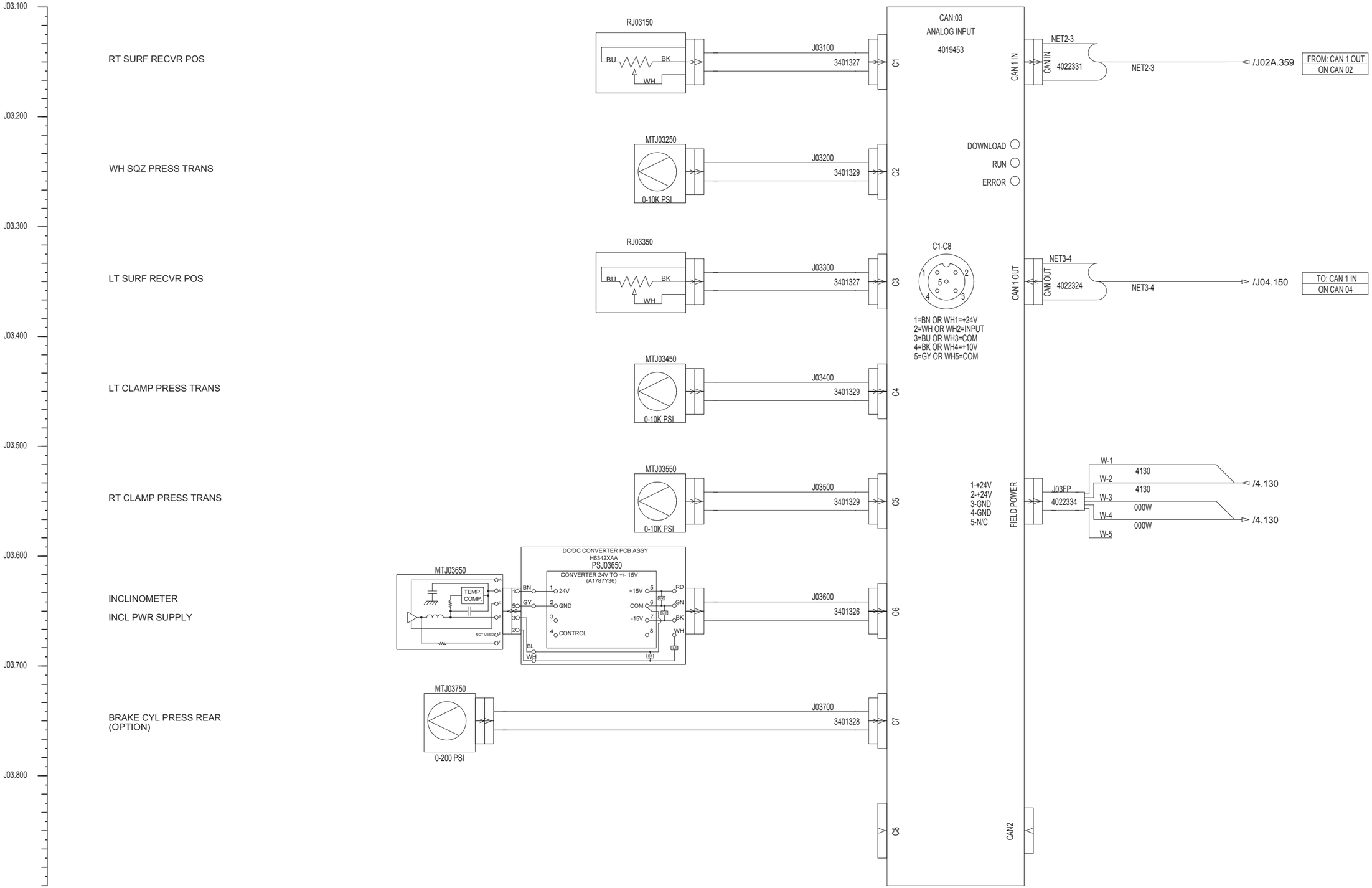

CONFIDENTIAL

©COPYRIGHT 2011 HARSCO. THIS DRAWING OR DOCUMENT IS THE PROPERTY OF HARSCO AND EMBODIES CONFIDENTIAL INFORMATION, TRADE SECRET INFORMATION, AND/OR KNOW-HOW THAT IS THE PROPERTY OF HARSCO. BY ACCEPTING THIS DRAWING OR DOCUMENT, THE RECIPIENT AGREES (1) NOT TO PROVIDE, OR OTHERWISE MAKE AVAILABLE, THE DRAWING OR DOCUMENT, OR ANY INFORMATION OR KNOW-HOW EMBODIED THEREIN, TO ANY THIRD PARTY AND (2) NOT TO REPRODUCE OR USE THE DRAWING OR DOCUMENT TO MANUFACTURE ANY APPARATUS OR DEVICE, WITHOUT THE PRIOR WRITTEN AUTHORIZATION OF HARSCO.

CHANGE #		REVISION	DR	DATE
EC503310	I	SEE EC FOR CHANGE DETAIL	CJW	04-05-12
EC501420	B	UPDATE AS BUILT	CJW	06/11
EC501724	C	MODIFIED PERIMETER LIGHT CIRCUIT FROM 1 CB TO 3	CJW	08/11
EC501821	D	UPDATE AS BUILT	CJW	08/11
EC502003	E	ADDED DRONE KIT, SHT 7, NEW CB SHT 4	CJW	09-22-11
EC502615	F	ADD ECM CONNECTOR, UPDATE SAT RADIO CABLE PN	CJW	01-05-12
EC502345	G	ADDED DRONE CAMERA KIT OPTION	DAS	01-09-12
EC502851	H	UPDATED JUPITER CABLES AS BUILT, SEE EC FOR CHANGE DETAIL	CJW	02-08-12

DRAWING TITLE/DESCRIPTION:
ELECTRICAL SCHEMATIC
Can:03 Analog Module

MACHINE TYPE-MODEL:
MARK IV

E3 PROJECT FILE NAME:
MARK IV HD_10

SHEET NUMBER: J03
NUMBER OF JUPITER SHEETS: 19
TOTAL NUMBER OF SHEETS: 30

DRAWN BY: CJW
REL. DATE: 05/11
SIZE: D
SCALE:

HARSCO RAIL

E3 DRAWING
5007950

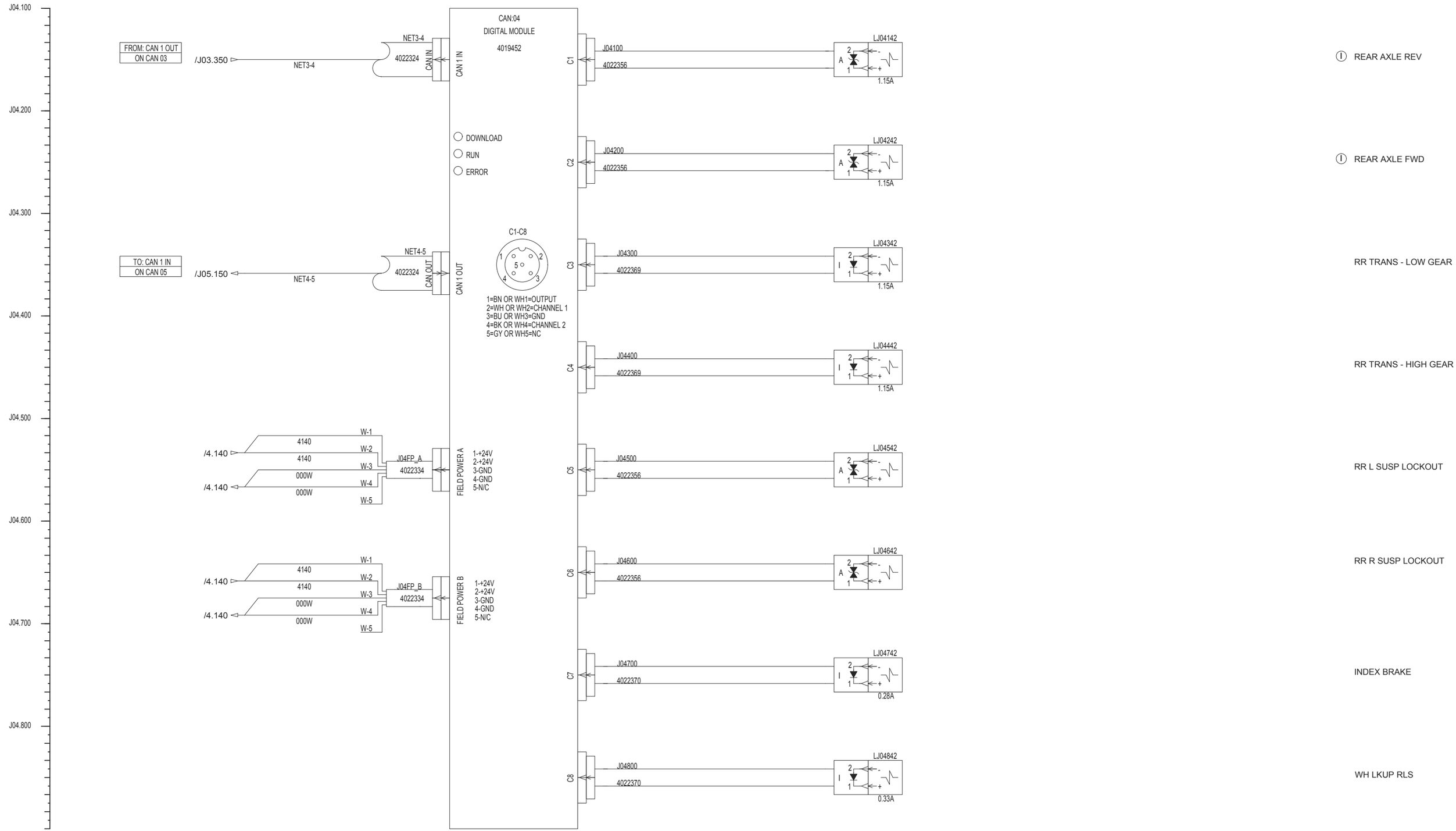

CONFIDENTIAL

©COPYRIGHT 2011 HARSCO. THIS DRAWING OR DOCUMENT IS THE PROPERTY OF HARSCO AND EMBODIES CONFIDENTIAL INFORMATION, TRADE SECRET INFORMATION, AND/OR KNOW-HOW THAT IS THE PROPERTY OF HARSCO. BY ACCEPTING THIS DRAWING OR DOCUMENT, THE RECIPIENT AGREES (1) NOT TO PROVIDE, OR OTHERWISE MAKE AVAILABLE, THE DRAWING OR DOCUMENT, OR ANY INFORMATION OR KNOW-HOW EMBODIED THEREIN, TO ANY THIRD PARTY AND (2) NOT TO REPRODUCE OR USE THE DRAWING OR DOCUMENT TO MANUFACTURE ANY APPARATUS OR DEVICE, WITHOUT THE PRIOR WRITTEN AUTHORIZATION OF HARSCO.

CHANGE #		REVISION	DR	DATE
EC503310	I	SEE EC FOR CHANGE DETAIL	CJW	04-05-12
EC501420	B	UPDATE AS BUILT	CJW	06/11
EC501724	C	MODIFIED PERIMETER LIGHT CIRCUIT FROM 1 CB TO 3	CJW	08/11
EC501821	D	UPDATE AS BUILT	CJW	08/11
EC502003	E	ADDED DRONE KIT, SHT 7, NEW CB SHT 4	CJW	09-22-11
EC502615	F	ADD ECM CONNECTOR, UPDATE SAT RADIO CABLE PN	CJW	01-05-12
EC502345	G	ADDED DRONE CAMERA KIT OPTION	DAS	01-09-12
EC502851	H	UPDATED JUPITER CABLES AS BUILT, SEE EC FOR CHANGE DETAIL	CJW	02-08-12

DRAWING TITLE/DESCRIPTION:
ELECTRICAL SCHEMATIC
Can:04 Digital Module

MACHINE TYPE-MODEL:
MARK IV

E3 PROJECT FILE NAME:
MARK IV HD_10

SHEET NUMBER: J04
NUMBER OF JUPITER SHEETS: 19
TOTAL NUMBER OF SHEETS: 30

DRAWN BY: CJW
REL. DATE: 05/11
SIZE: D
SCALE:

HARSCO RAIL

E3 DRAWING
5007950

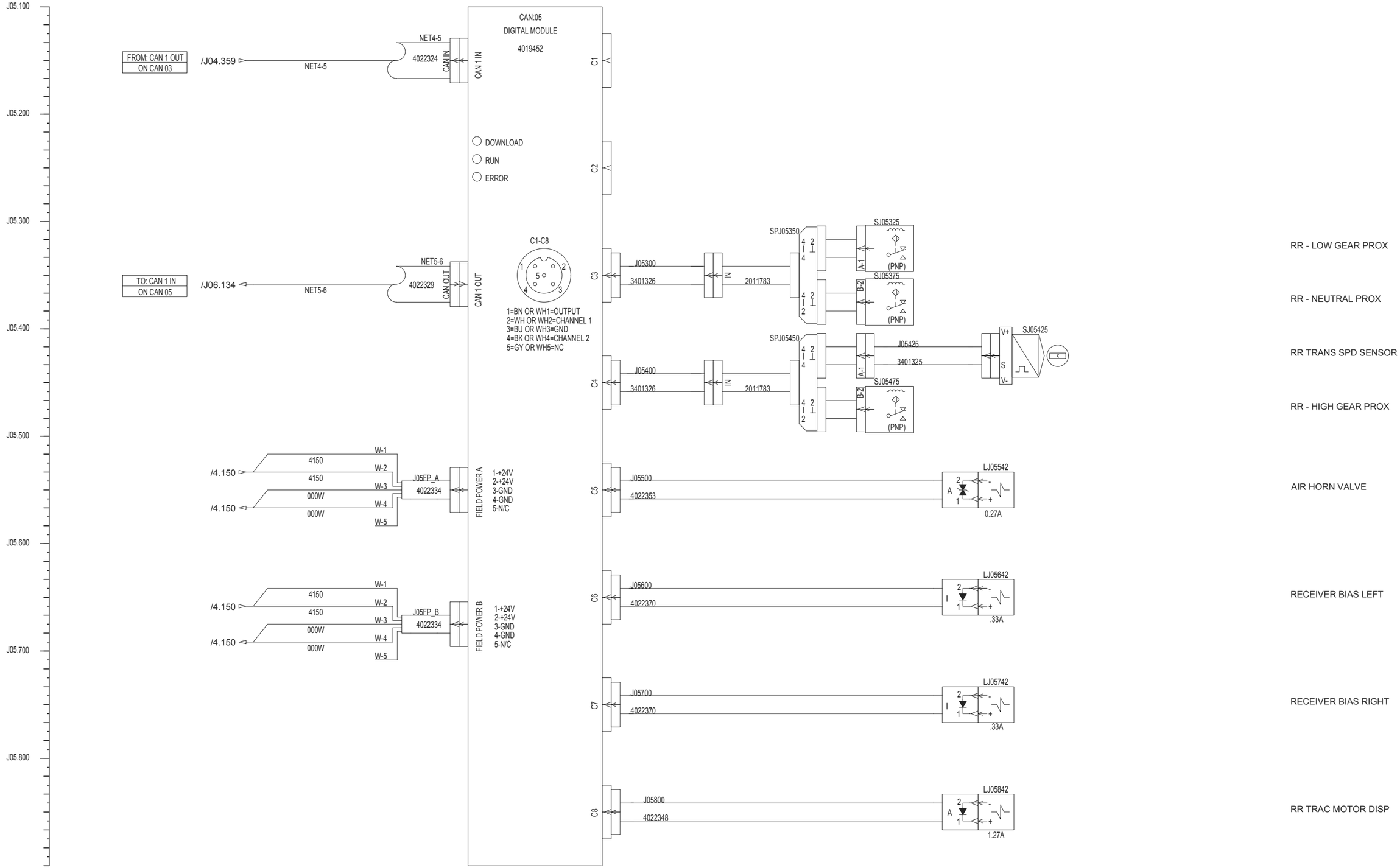

CONFIDENTIAL

©COPYRIGHT 2011 HARSCO. THIS DRAWING OR DOCUMENT IS THE PROPERTY OF HARSCO AND EMBODIES CONFIDENTIAL INFORMATION, TRADE SECRET INFORMATION, AND/OR KNOW-HOW THAT IS THE PROPERTY OF HARSCO. BY ACCEPTING THIS DRAWING OR DOCUMENT, THE RECIPIENT AGREES (1) NOT TO PROVIDE, OR OTHERWISE MAKE AVAILABLE, THE DRAWING OR DOCUMENT, OR ANY INFORMATION OR KNOW-HOW EMBODIED THEREIN, TO ANY THIRD PARTY AND (2) NOT TO REPRODUCE OR USE THE DRAWING OR DOCUMENT TO MANUFACTURE ANY APPARATUS OR DEVICE, WITHOUT THE PRIOR WRITTEN AUTHORIZATION OF HARSCO.

CHANGE #		REVISION	DR	DATE
EC503310	I	SEE EC FOR CHANGE DETAIL	CJW	04-05-12
EC501420	B	UPDATE AS BUILT	CJW	06/11
EC501724	C	MODIFIED PERIMETER LIGHT CIRCUIT FROM 1 CB TO 3	CJW	08/11
EC501821	D	UPDATE AS BUILT	CJW	08/11
EC502003	E	ADDED DRONE KIT, SHT 7, NEW CB SHT 4	CJW	09-22-11
EC502615	F	ADD ECM CONNECTOR, UPDATE SAT RADIO CABLE PN	CJW	01-05-12
EC502345	G	ADDED DRONE CAMERA KIT OPTION	DAS	01-09-12
EC502851	H	UPDATED JUPITER CABLES AS BUILT, SEE EC FOR CHANGE DETAIL	CJW	02-08-12

DRAWING TITLE/DESCRIPTION:
ELECTRICAL SCHEMATIC
Can:05 Digital Module

MACHINE TYPE-MODEL:
MARK IV

E3 PROJECT FILE NAME:
MARK IV HD_10

SHEET NUMBER: J05
NUMBER OF JUPITER SHEETS: 19
TOTAL NUMBER OF SHEETS: 30

DRAWN BY: CJW
REL. DATE: 05/11
SIZE: D
SCALE:

HARSCO RAIL

E3 DRAWING
5007950

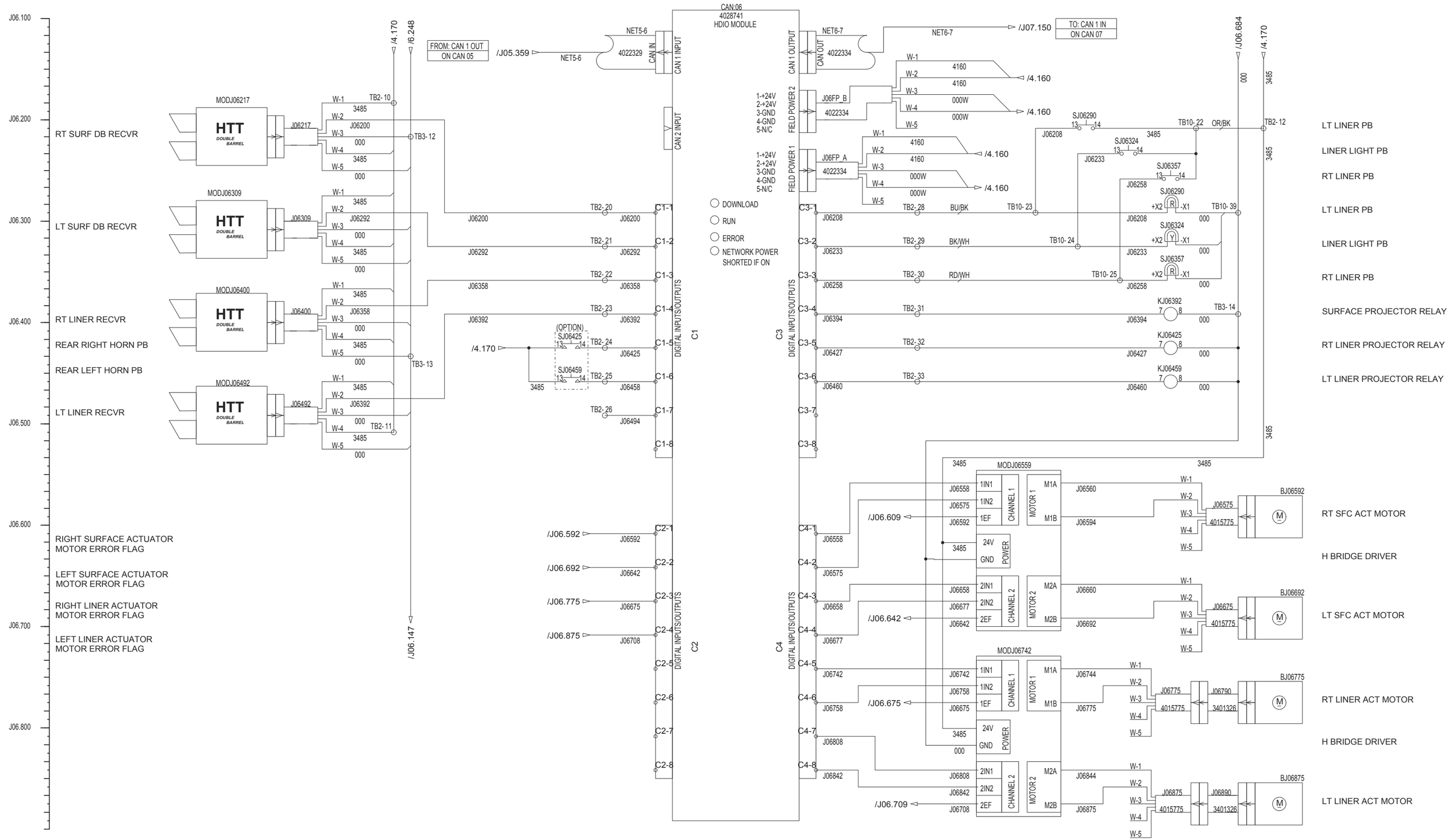

CONFIDENTIAL

©COPYRIGHT 2011 HARSCO. THIS DRAWING OR DOCUMENT IS THE PROPERTY OF HARSCO AND EMBODIES CONFIDENTIAL INFORMATION, TRADE SECRET INFORMATION, AND/OR KNOW-HOW THAT IS THE PROPERTY OF HARSCO. BY ACCEPTING THIS DRAWING OR DOCUMENT, THE RECIPIENT AGREES (1) NOT TO PROVIDE, OR OTHERWISE MAKE AVAILABLE, THE DRAWING OR DOCUMENT, OR ANY INFORMATION OR KNOW-HOW EMBODIED THEREIN, TO ANY THIRD PARTY AND (2) NOT TO REPRODUCE OR USE THE DRAWING OR DOCUMENT TO MANUFACTURE ANY APPARATUS OR DEVICE, WITHOUT THE PRIOR WRITTEN AUTHORIZATION OF HARSCO.

CHANGE #		REVISION	DR	DATE
EC503310	I	SEE EC FOR CHANGE DETAIL	CJW	04-05-12
EC501420	B	UPDATE AS BUILT	CJW	06/11
EC501724	C	MODIFIED PERIMETER LIGHT CIRCUIT FROM 1 CB TO 3	CJW	08/11
EC501821	D	UPDATE AS BUILT	CJW	08/11
EC502003	E	ADDED DRONE KIT, SHT 7, NEW CB SHT 4	CJW	09-22-11
EC502615	F	ADD ECM CONNECTOR, UPDATE SAT RADIO CABLE PN	CJW	01-05-12
EC502345	G	ADDED DRONE CAMERA KIT OPTION	DAS	01-09-12
EC502851	H	UPDATED JUPITER CABLES AS BUILT, SEE EC FOR CHANGE DETAIL	CJW	02-08-12

DRAWING TITLE/DESCRIPTION:
ELECTRICAL SCHEMATIC
Can:06 HDIO Module

MACHINE TYPE-MODEL:
MARK IV

E3 PROJECT FILE NAME:
MARK IV HD_10

SHEET NUMBER: J06

NUMBER OF JUPITER SHEETS: 19

TOTAL NUMBER OF SHEETS: 30

DRAWN BY: CJW

REL. DATE: 05/11

SIZE: D

SCALE:

HARSCO RAIL

E3 DRAWING

5007950

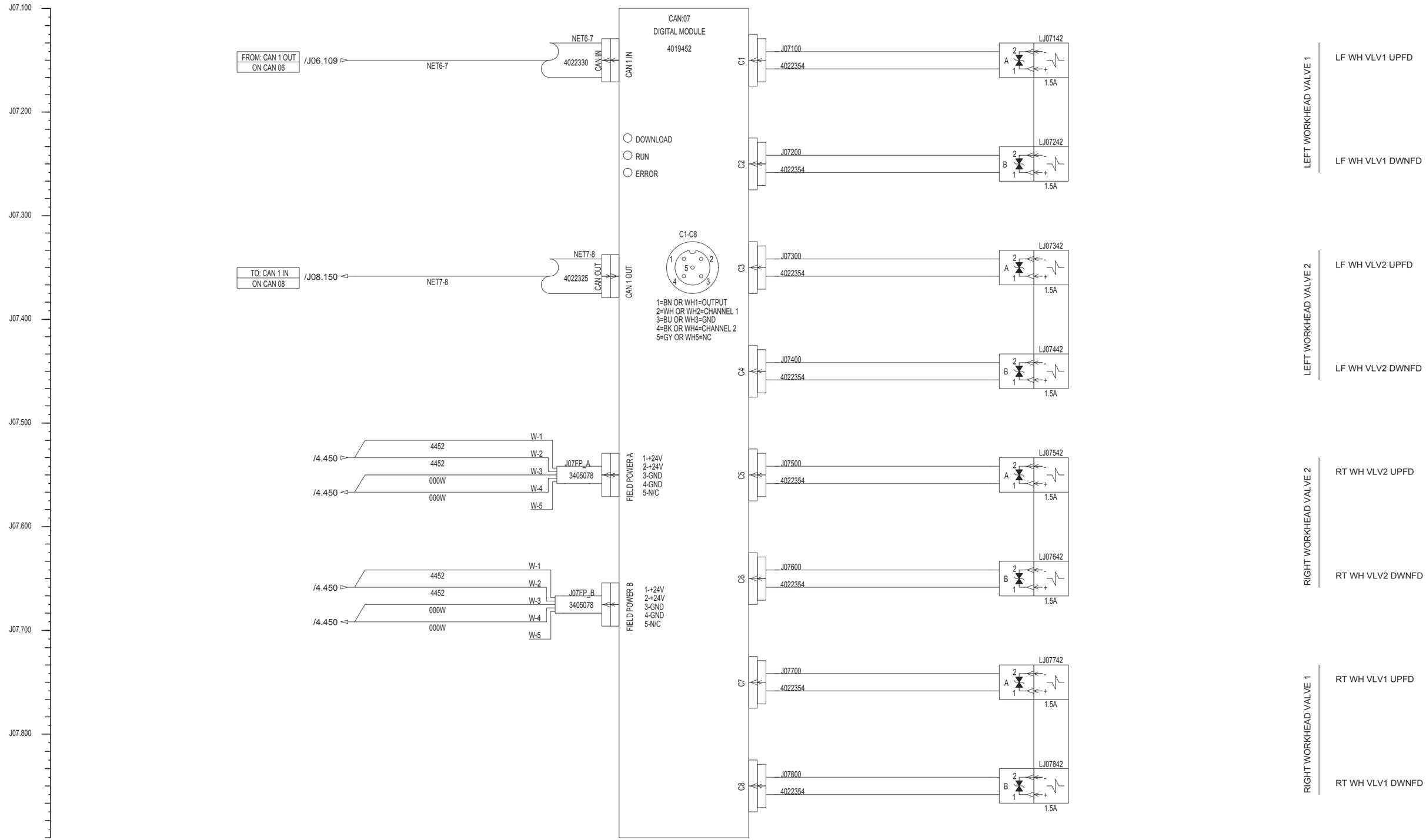

CONFIDENTIAL

©COPYRIGHT 2011 HARSCO. THIS DRAWING OR DOCUMENT IS THE PROPERTY OF HARSCO AND EMBODIES CONFIDENTIAL INFORMATION, TRADE SECRET INFORMATION, AND/OR KNOW-HOW THAT IS THE PROPERTY OF HARSCO. BY ACCEPTING THIS DRAWING OR DOCUMENT, THE RECIPIENT AGREES (1) NOT TO PROVIDE, OR OTHERWISE MAKE AVAILABLE, THE DRAWING OR DOCUMENT, OR ANY INFORMATION OR KNOW-HOW EMBODIED THEREIN, TO ANY THIRD PARTY AND (2) NOT TO REPRODUCE OR USE THE DRAWING OR DOCUMENT TO MANUFACTURE ANY APPARATUS OR DEVICE, WITHOUT THE PRIOR WRITTEN AUTHORIZATION OF HARSCO.

CHANGE #		REVISION	DR	DATE
EC503310	I	SEE EC FOR CHANGE DETAIL	CJW	04-05-12
EC501420	B	UPDATE AS BUILT	CJW	06/11
EC501724	C	MODIFIED PERIMETER LIGHT CIRCUIT FROM 1 CB TO 3	CJW	08/11
EC501821	D	UPDATE AS BUILT	CJW	08/11
EC502003	E	ADDED DRONE KIT, SHT 7, NEW CB SHT 4	CJW	09-22-11
EC502615	F	ADD ECM CONNECTOR, UPDATE SAT RADIO CABLE PN	CJW	01-05-12
EC502345	G	ADDED DRONE CAMERA KIT OPTION	DAS	01-09-12
EC502851	H	UPDATED JUPITER CABLES AS BUILT, SEE EC FOR CHANGE DETAIL	CJW	02-08-12

DRAWING TITLE/DESCRIPTION:
ELECTRICAL SCHEMATIC
Can:07 Digital Module

MACHINE TYPE-MODEL:
MARK IV

E3 PROJECT FILE NAME:
MARK IV HD_10

SHEET NUMBER: J07
NUMBER OF JUPITER SHEETS: 19
TOTAL NUMBER OF SHEETS: 30

DRAWN BY: CJW
REL. DATE: 05/11
SIZE: D
SCALE:

HARSCO RAIL

E3 DRAWING

5007950

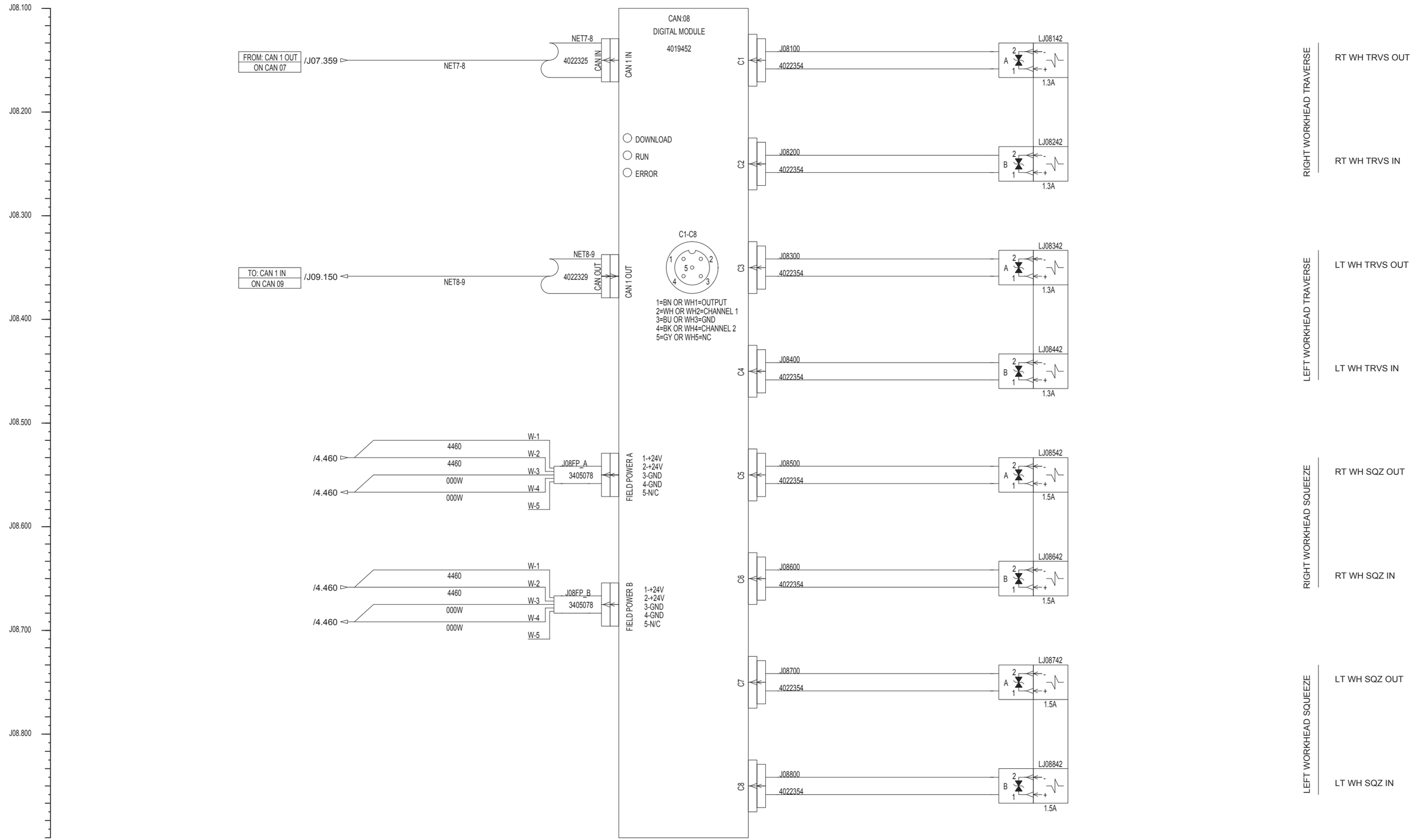

CONFIDENTIAL

©COPYRIGHT 2011 HARSCO. THIS DRAWING OR DOCUMENT IS THE PROPERTY OF HARSCO AND EMBODIES CONFIDENTIAL INFORMATION, TRADE SECRET INFORMATION, AND/OR KNOW-HOW THAT IS THE PROPERTY OF HARSCO. BY ACCEPTING THIS DRAWING OR DOCUMENT, THE RECIPIENT AGREES (1) NOT TO PROVIDE, OR OTHERWISE MAKE AVAILABLE, THE DRAWING OR DOCUMENT, OR ANY INFORMATION OR KNOW-HOW EMBODIED THEREIN, TO ANY THIRD PARTY AND (2) NOT TO REPRODUCE OR USE THE DRAWING OR DOCUMENT TO MANUFACTURE ANY APPARATUS OR DEVICE, WITHOUT THE PRIOR WRITTEN AUTHORIZATION OF HARSCO.

CHANGE #		REVISION	DR	DATE
EC503310	I	SEE EC FOR CHANGE DETAIL	CJW	04-05-12
EC501420	B	UPDATE AS BUILT	CJW	06/11
EC501724	C	MODIFIED PERIMETER LIGHT CIRCUIT FROM 1 CB TO 3	CJW	08/11
EC501821	D	UPDATE AS BUILT	CJW	08/11
EC502003	E	ADDED DRONE KIT, SHT 7, NEW CB SHT 4	CJW	09-22-11
EC502615	F	ADD ECM CONNECTOR, UPDATE SAT RADIO CABLE PN	CJW	01-05-12
EC502345	G	ADDED DRONE CAMERA KIT OPTION	DAS	01-09-12
EC502851	H	UPDATED JUPITER CABLES AS BUILT, SEE EC FOR CHANGE DETAIL	CJW	02-08-12

DRAWING TITLE/DESCRIPTION:
ELECTRICAL SCHEMATIC
Can:08 Digital Module

MACHINE TYPE-MODEL:
MARK IV

E3 PROJECT FILE NAME:
MARK IV HD_10

SHEET NUMBER: J08
NUMBER OF JUPITER SHEETS: 19
TOTAL NUMBER OF SHEETS: 30

DRAWN BY: CJW
REL. DATE: 05/11
SIZE: D
SCALE:

HARSCO RAIL

E3 DRAWING

5007950

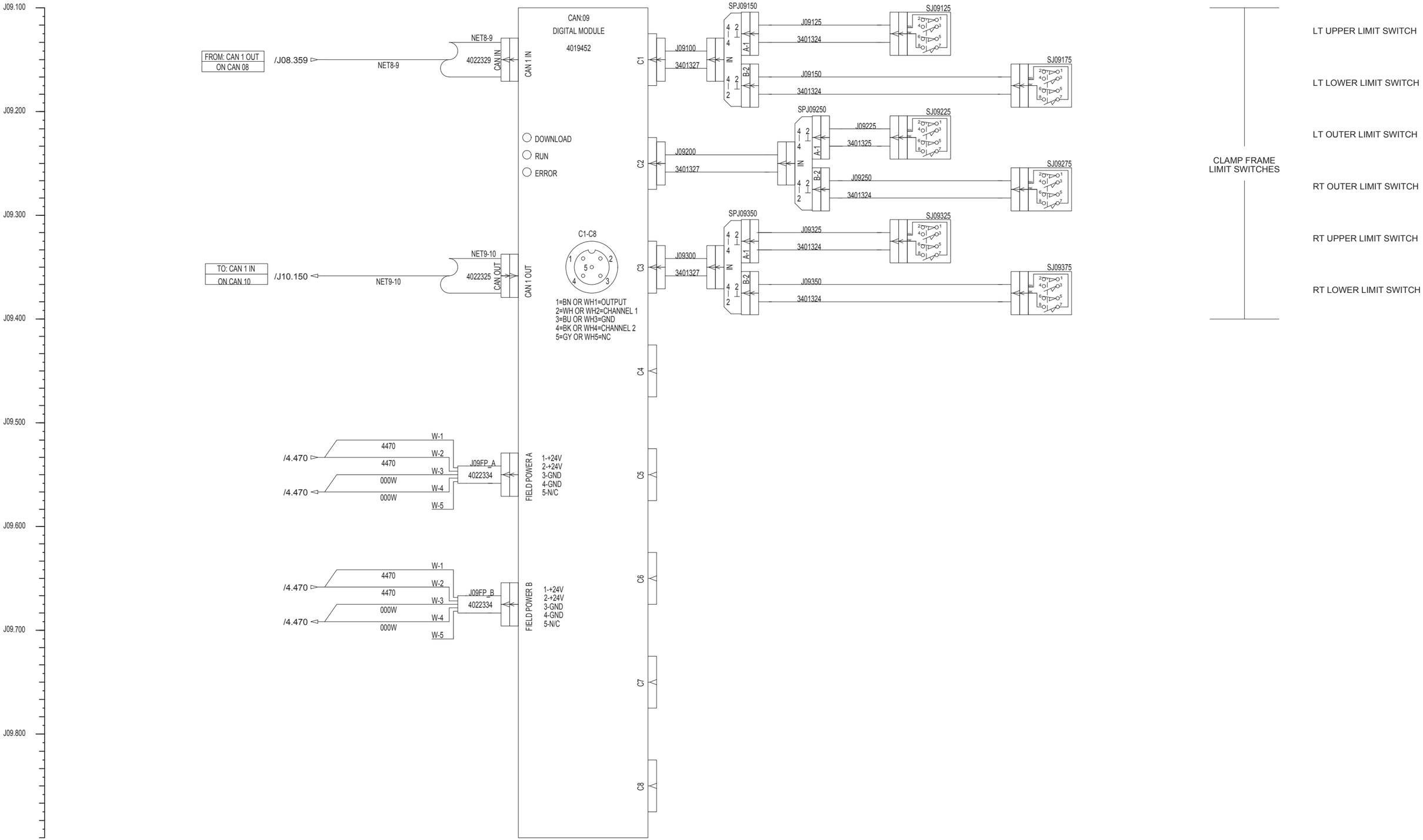

CONFIDENTIAL

©COPYRIGHT 2011 HARSCO. THIS DRAWING OR DOCUMENT IS THE PROPERTY OF HARSCO AND EMBODIES CONFIDENTIAL INFORMATION, TRADE SECRET INFORMATION, AND/OR KNOW-HOW THAT IS THE PROPERTY OF HARSCO. BY ACCEPTING THIS DRAWING OR DOCUMENT, THE RECIPIENT AGREES (1) NOT TO PROVIDE, OR OTHERWISE MAKE AVAILABLE, THE DRAWING OR DOCUMENT, OR ANY INFORMATION OR KNOW-HOW EMBODIED THEREIN, TO ANY THIRD PARTY AND (2) NOT TO REPRODUCE OR USE THE DRAWING OR DOCUMENT TO MANUFACTURE ANY APPARATUS OR DEVICE, WITHOUT THE PRIOR WRITTEN AUTHORIZATION OF HARSCO.

CHANGE #		REVISION	DR	DATE
EC503310	I	SEE EC FOR CHANGE DETAIL	CJW	04-05-12
EC501420	B	UPDATE AS BUILT	CJW	06/11
EC501724	C	MODIFIED PERIMETER LIGHT CIRCUIT FROM 1 CB TO 3	CJW	08/11
EC501821	D	UPDATE AS BUILT	CJW	08/11
EC502003	E	ADDED DRONE KIT, SHT 7, NEW CB SHT 4	CJW	09-22-11
EC502615	F	ADD ECM CONNECTOR, UPDATE SAT RADIO CABLE PN	CJW	01-05-12
EC502345	G	ADDED DRONE CAMERA KIT OPTION	DAS	01-09-12
EC502851	H	UPDATED JUPITER CABLES AS BUILT, SEE EC FOR CHANGE DETAIL	CJW	02-08-12

DRAWING TITLE/DESCRIPTION:
ELECTRICAL SCHEMATIC
Can:09 Digital Module

MACHINE TYPE-MODEL:
MARK IV

E3 PROJECT FILE NAME:
MARK IV HD_10

SHEET NUMBER: J09
NUMBER OF JUPITER SHEETS: 19
TOTAL NUMBER OF SHEETS: 30

DRAWN BY: CJW
REL. DATE: 05/11
SIZE: D
SCALE:

HARSCO RAIL

E3 DRAWING
5007950

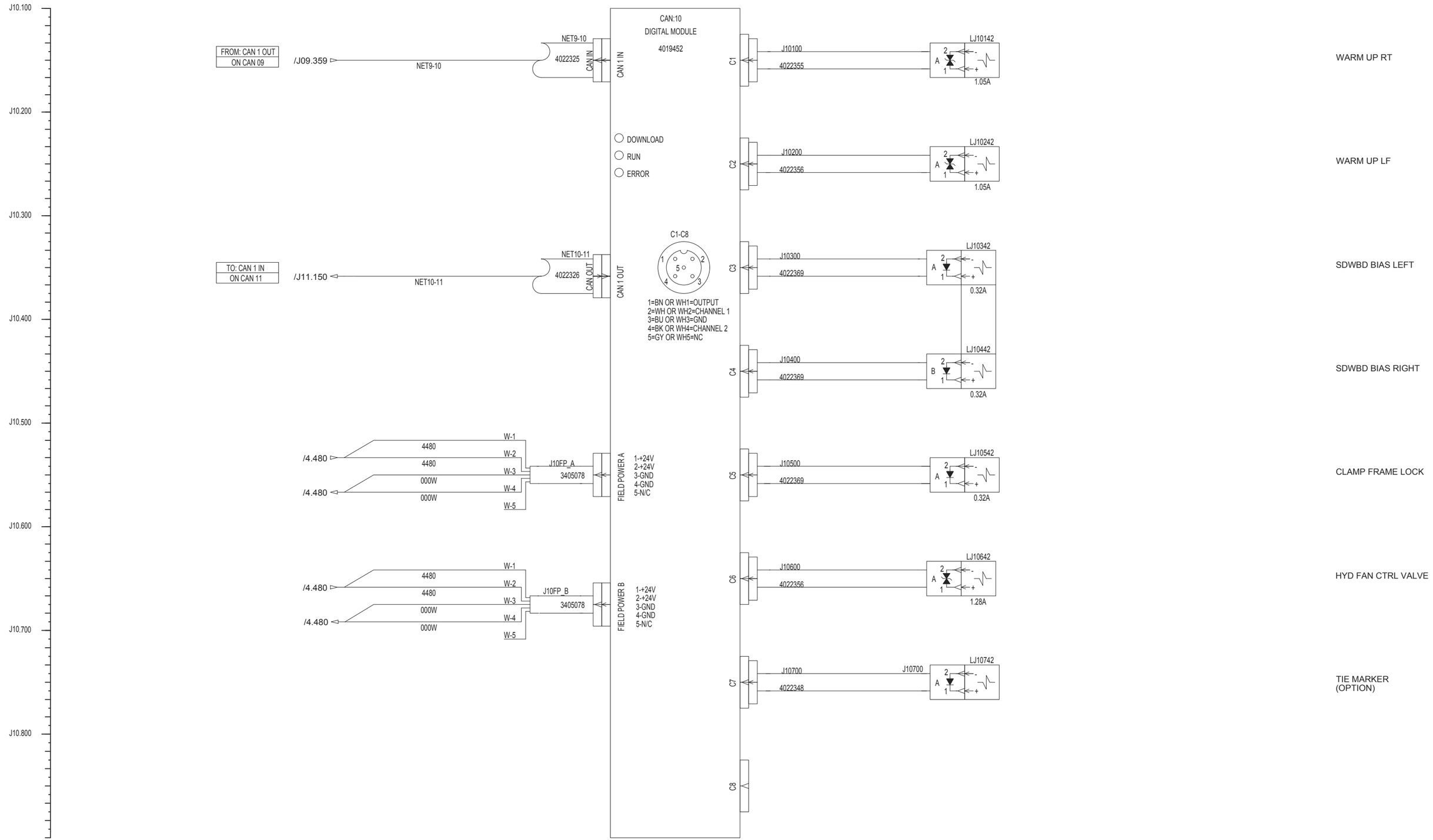

CONFIDENTIAL

©COPYRIGHT 2011 HARSCO. THIS DRAWING OR DOCUMENT IS THE PROPERTY OF HARSCO AND EMBODIES CONFIDENTIAL INFORMATION, TRADE SECRET INFORMATION, AND/OR KNOW-HOW THAT IS THE PROPERTY OF HARSCO. BY ACCEPTING THIS DRAWING OR DOCUMENT, THE RECIPIENT AGREES (1) NOT TO PROVIDE, OR OTHERWISE MAKE AVAILABLE, THE DRAWING OR DOCUMENT, OR ANY INFORMATION OR KNOW-HOW EMBODIED THEREIN, TO ANY THIRD PARTY AND (2) NOT TO REPRODUCE OR USE THE DRAWING OR DOCUMENT TO MANUFACTURE ANY APPARATUS OR DEVICE, WITHOUT THE PRIOR WRITTEN AUTHORIZATION OF HARSCO.

CHANGE #		REVISION	DR	DATE
EC503310	I	SEE EC FOR CHANGE DETAIL	CJW	04-05-12
EC501420	B	UPDATE AS BUILT	CJW	06/11
EC501724	C	MODIFIED PERIMETER LIGHT CIRCUIT FROM 1 CB TO 3	CJW	08/11
EC501821	D	UPDATE AS BUILT	CJW	08/11
EC502003	E	ADDED DRONE KIT, SHT 7, NEW CB SHT 4	CJW	09-22-11
EC502615	F	ADD ECM CONNECTOR, UPDATE SAT RADIO CABLE PN	CJW	01-05-12
EC502345	G	ADDED DRONE CAMERA KIT OPTION	DAS	01-09-12
EC502851	H	UPDATED JUPITER CABLES AS BUILT, SEE EC FOR CHANGE DETAIL	CJW	02-08-12

DRAWING TITLE/DESCRIPTION:
ELECTRICAL SCHEMATIC
Can:10 Digital Module

MACHINE TYPE-MODEL:
MARK IV

E3 PROJECT FILE NAME:
MARK IV HD_10

SHEET NUMBER: J10
NUMBER OF JUPITER SHEETS: 19
TOTAL NUMBER OF SHEETS: 30

DRAWN BY: CJW
REL. DATE: 05/11
SIZE: D
SCALE:

HARSCO RAIL

E3 DRAWING
5007950

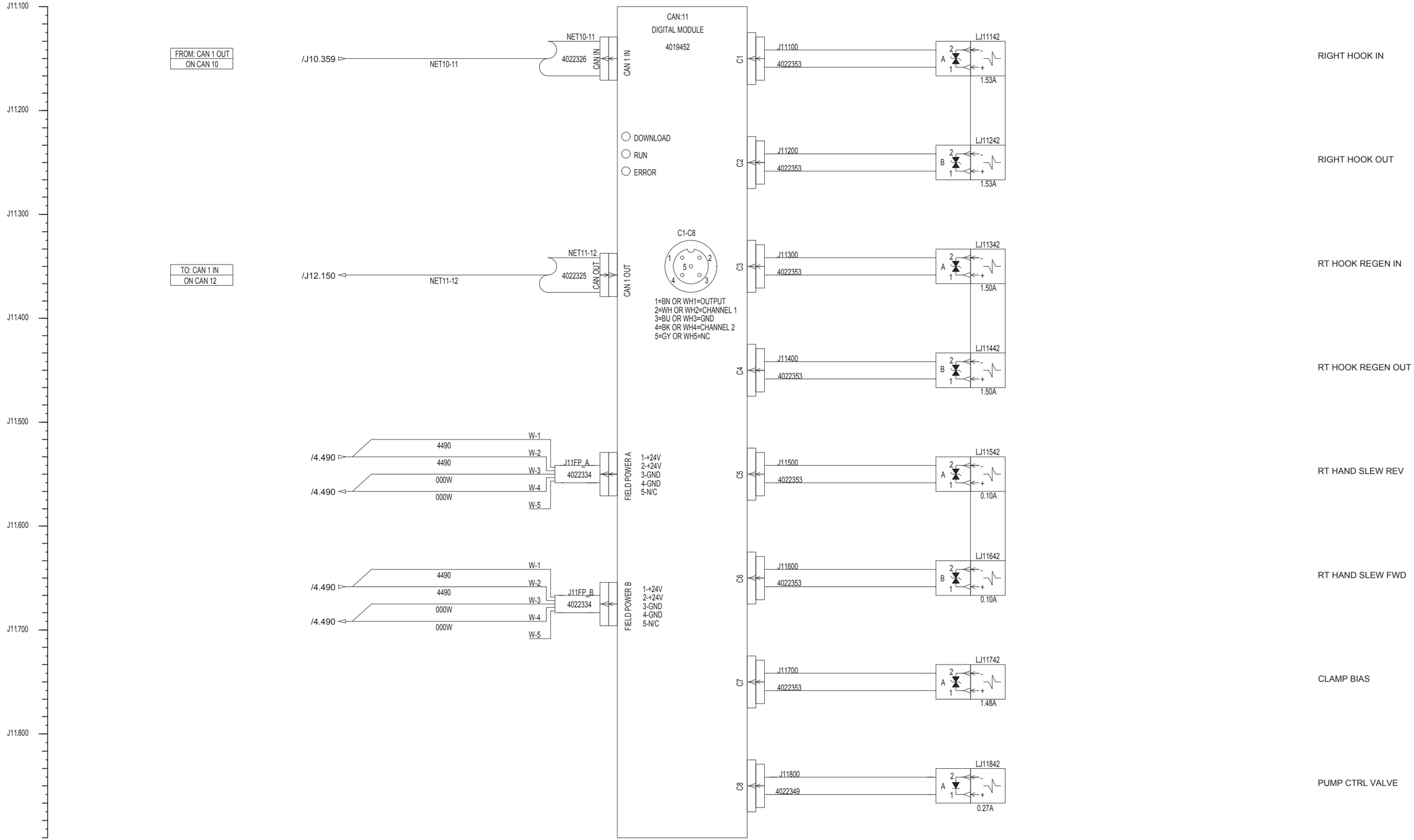

CONFIDENTIAL

©COPYRIGHT 2011 HARSCO. THIS DRAWING OR DOCUMENT IS THE PROPERTY OF HARSCO AND EMBODIES CONFIDENTIAL INFORMATION, TRADE SECRET INFORMATION, AND/OR KNOW-HOW THAT IS THE PROPERTY OF HARSCO. BY ACCEPTING THIS DRAWING OR DOCUMENT, THE RECIPIENT AGREES (1) NOT TO PROVIDE, OR OTHERWISE MAKE AVAILABLE, THE DRAWING OR DOCUMENT, OR ANY INFORMATION OR KNOW-HOW EMBODIED THEREIN, TO ANY THIRD PARTY AND (2) NOT TO REPRODUCE OR USE THE DRAWING OR DOCUMENT TO MANUFACTURE ANY APPARATUS OR DEVICE, WITHOUT THE PRIOR WRITTEN AUTHORIZATION OF HARSCO.

CHANGE #		REVISION	DR	DATE
EC503310	I	SEE EC FOR CHANGE DETAIL	CJW	04-05-12
EC501420	B	UPDATE AS BUILT	CJW	06/11
EC501724	C	MODIFIED PERIMETER LIGHT CIRCUIT FROM 1 CB TO 3	CJW	08/11
EC501821	D	UPDATE AS BUILT	CJW	08/11
EC502003	E	ADDED DRONE KIT, SHT 7, NEW CB SHT 4	CJW	09-22-11
EC502615	F	ADD ECM CONNECTOR, UPDATE SAT RADIO CABLE PN	CJW	01-05-12
EC502345	G	ADDED DRONE CAMERA KIT OPTION	DAS	01-09-12
EC502851	H	UPDATED JUPITER CABLES AS BUILT, SEE EC FOR CHANGE DETAIL	CJW	02-08-12

DRAWING TITLE/DESCRIPTION:
ELECTRICAL SCHEMATIC
Can:11 Digital Module

MACHINE TYPE-MODEL:
MARK IV

E3 PROJECT FILE NAME:
MARK IV HD_10

SHEET NUMBER: J11
NUMBER OF JUPITER SHEETS: 19
TOTAL NUMBER OF SHEETS: 30

DRAWN BY: CJW
REL. DATE: 05/11
SIZE: D
SCALE:

HARSCO RAIL

E3 DRAWING
5007950

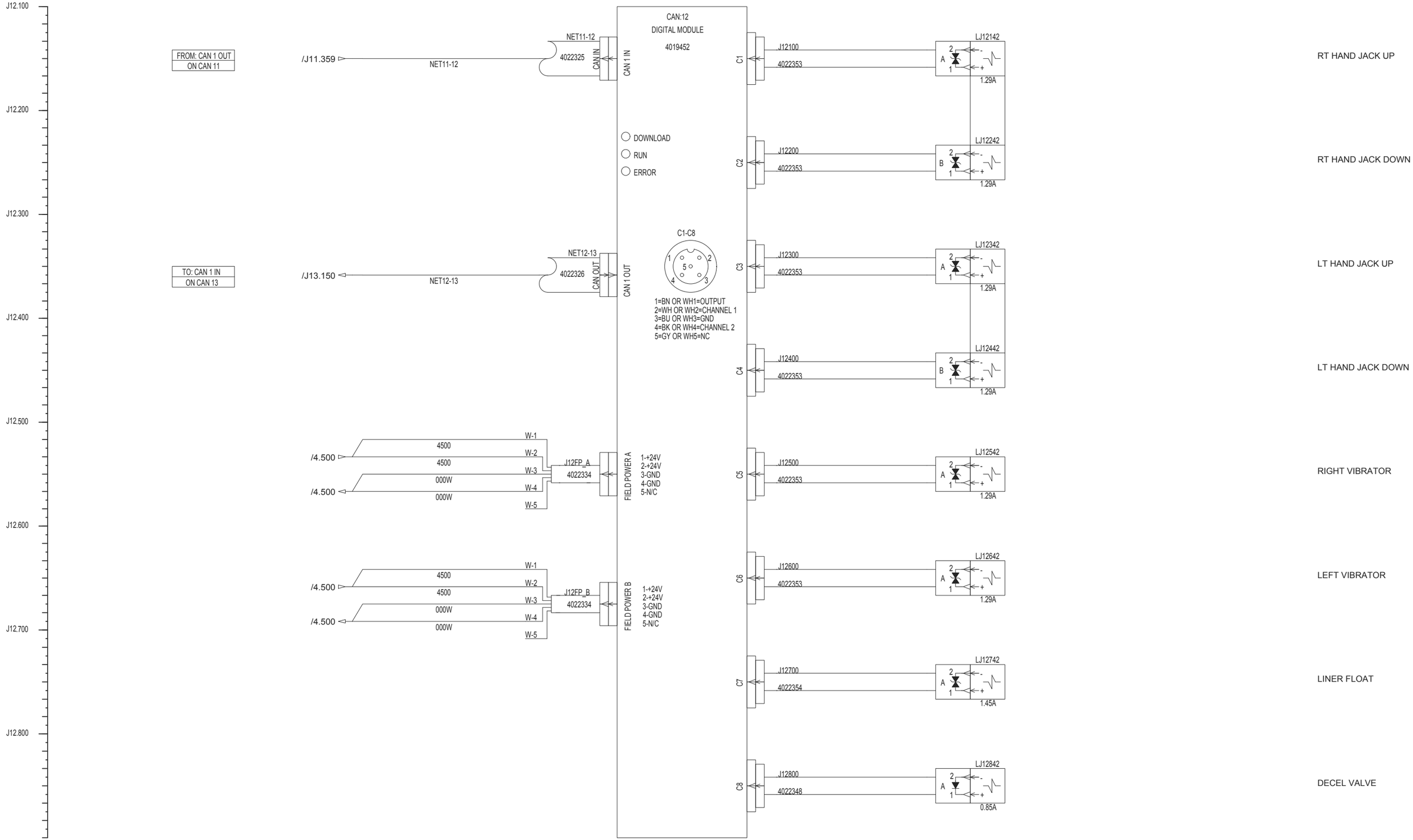

CONFIDENTIAL

©COPYRIGHT 2011 HARSCO. THIS DRAWING OR DOCUMENT IS THE PROPERTY OF HARSCO AND EMBODIES CONFIDENTIAL INFORMATION, TRADE SECRET INFORMATION, AND/OR KNOW-HOW THAT IS THE PROPERTY OF HARSCO. BY ACCEPTING THIS DRAWING OR DOCUMENT, THE RECIPIENT AGREES (1) NOT TO PROVIDE, OR OTHERWISE MAKE AVAILABLE, THE DRAWING OR DOCUMENT, OR ANY INFORMATION OR KNOW-HOW EMBODIED THEREIN, TO ANY THIRD PARTY AND (2) NOT TO REPRODUCE OR USE THE DRAWING OR DOCUMENT TO MANUFACTURE ANY APPARATUS OR DEVICE, WITHOUT THE PRIOR WRITTEN AUTHORIZATION OF HARSCO.

CHANGE #		REVISION	DR	DATE
EC503310	I	SEE EC FOR CHANGE DETAIL	CJW	04-05-12
EC501420	B	UPDATE AS BUILT	CJW	06/11
EC501724	C	MODIFIED PERIMETER LIGHT CIRCUIT FROM 1 CB TO 3	CJW	08/11
EC501821	D	UPDATE AS BUILT	CJW	08/11
EC502003	E	ADDED DRONE KIT, SHT 7, NEW CB SHT 4	CJW	09-22-11
EC502615	F	ADD ECM CONNECTOR, UPDATE SAT RADIO CABLE PN	CJW	01-05-12
EC502345	G	ADDED DRONE CAMERA KIT OPTION	DAS	01-09-12
EC502851	H	UPDATED JUPITER CABLES AS BUILT, SEE EC FOR CHANGE DETAIL	CJW	02-08-12

DRAWING TITLE/DESCRIPTION:
ELECTRICAL SCHEMATIC
Can:12 Digital Module

MACHINE TYPE-MODEL:
MARK IV

E3 PROJECT FILE NAME:
MARK IV HD_10

SHEET NUMBER: J12
NUMBER OF JUPITER SHEETS: 19
TOTAL NUMBER OF SHEETS: 30

DRAWN BY: CJW
REL. DATE: 05/11
SIZE: D
SCALE:

HARSCO RAIL

E3 DRAWING
5007950

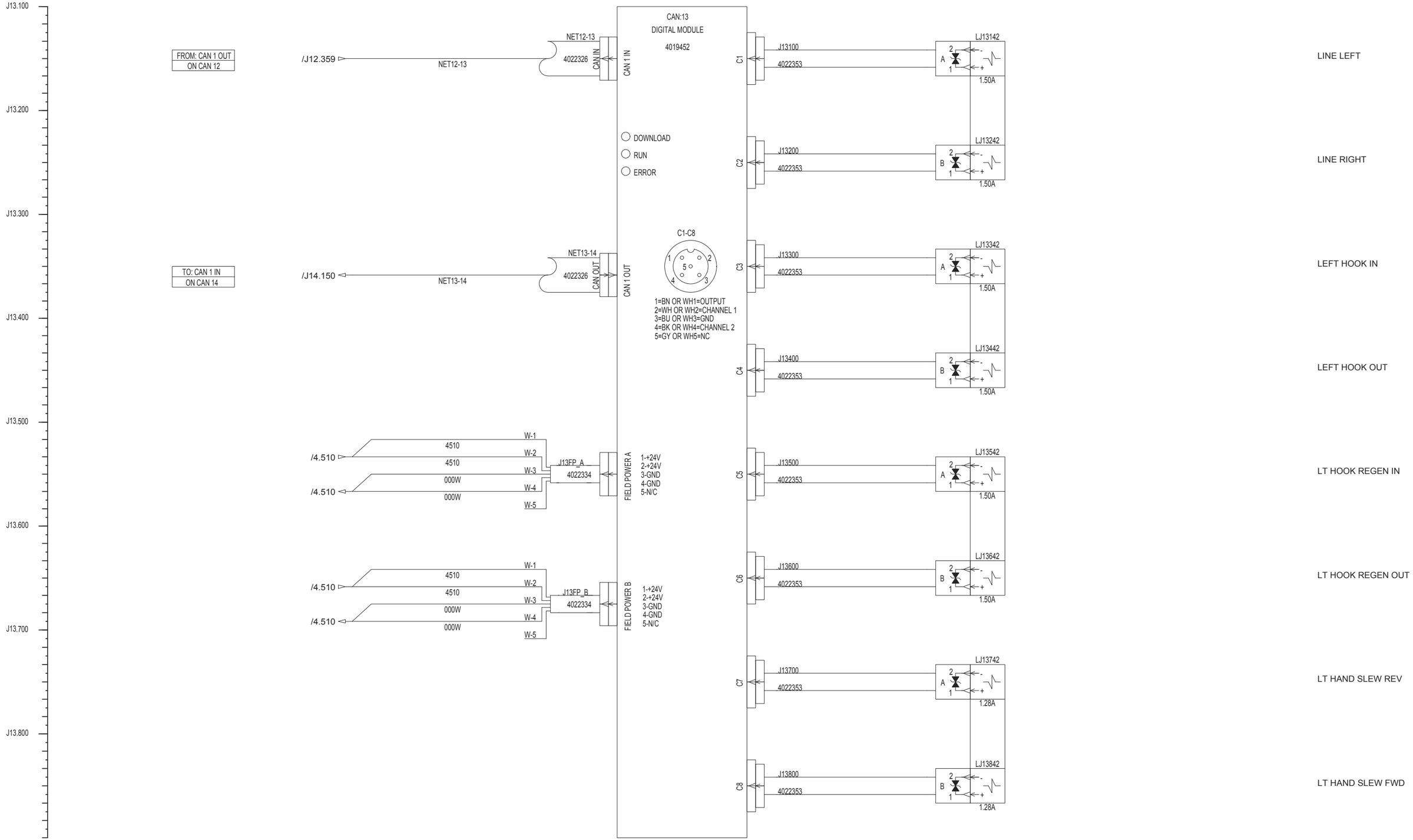

CONFIDENTIAL

©COPYRIGHT 2011 HARSCO. THIS DRAWING OR DOCUMENT IS THE PROPERTY OF HARSCO AND EMBODIES CONFIDENTIAL INFORMATION, TRADE SECRET INFORMATION, AND/OR KNOW-HOW THAT IS THE PROPERTY OF HARSCO. BY ACCEPTING THIS DRAWING OR DOCUMENT, THE RECIPIENT AGREES (1) NOT TO PROVIDE, OR OTHERWISE MAKE AVAILABLE, THE DRAWING OR DOCUMENT, OR ANY INFORMATION OR KNOW-HOW EMBODIED THEREIN, TO ANY THIRD PARTY AND (2) NOT TO REPRODUCE OR USE THE DRAWING OR DOCUMENT TO MANUFACTURE ANY APPARATUS OR DEVICE, WITHOUT THE PRIOR WRITTEN AUTHORIZATION OF HARSCO.

CHANGE #		REVISION	DR	DATE
EC503310	I	SEE EC FOR CHANGE DETAIL	CJW	04-05-12
EC501420	B	UPDATE AS BUILT	CJW	06/11
EC501724	C	MODIFIED PERIMETER LIGHT CIRCUIT FROM 1 CB TO 3	CJW	08/11
EC501821	D	UPDATE AS BUILT	CJW	08/11
EC502003	E	ADDED DRONE KIT, SHT 7, NEW CB SHT 4	CJW	09-22-11
EC502615	F	ADD ECM CONNECTOR, UPDATE SAT RADIO CABLE PN	CJW	01-05-12
EC502345	G	ADDED DRONE CAMERA KIT OPTION	DAS	01-09-12
EC502851	H	UPDATED JUPITER CABLES AS BUILT, SEE EC FOR CHANGE DETAIL	CJW	02-08-12

DRAWING TITLE/DESCRIPTION:
ELECTRICAL SCHEMATIC
Can:13 Digital Module

MACHINE TYPE-MODEL:
MARK IV

E3 PROJECT FILE NAME:
MARK IV HD_10

SHEET NUMBER: J13
NUMBER OF JUPITER SHEETS: 19
TOTAL NUMBER OF SHEETS: 30

DRAWN BY: CJW
REL. DATE: 05/11
SIZE: D
SCALE:

HARSCO RAIL

E3 DRAWING
5007950

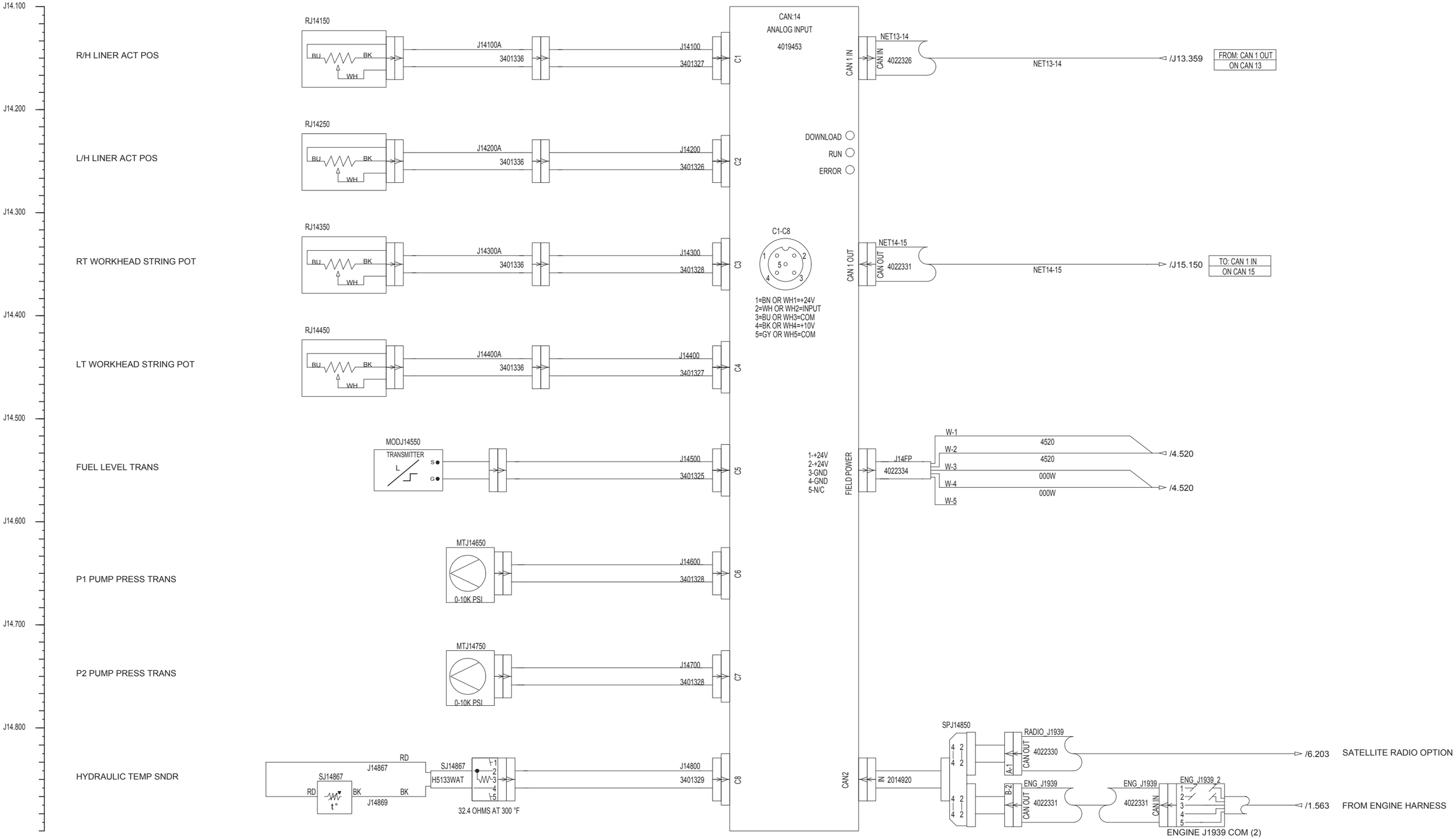

CONFIDENTIAL

©COPYRIGHT 2011 HARSCO. THIS DRAWING OR DOCUMENT IS THE PROPERTY OF HARSCO AND EMBODIES CONFIDENTIAL INFORMATION, TRADE SECRET INFORMATION, AND/OR KNOW-HOW THAT IS THE PROPERTY OF HARSCO. BY ACCEPTING THIS DRAWING OR DOCUMENT, THE RECIPIENT AGREES (1) NOT TO PROVIDE, OR OTHERWISE MAKE AVAILABLE, THE DRAWING OR DOCUMENT, OR ANY INFORMATION OR KNOW-HOW EMBODIED THEREIN, TO ANY THIRD PARTY AND (2) NOT TO REPRODUCE OR USE THE DRAWING OR DOCUMENT TO MANUFACTURE ANY APPARATUS OR DEVICE, WITHOUT THE PRIOR WRITTEN AUTHORIZATION OF HARSCO.

CHANGE #		REVISION	DR	DATE
EC503310	I	SEE EC FOR CHANGE DETAIL	CJW	04-05-12
EC501420	B	UPDATE AS BUILT	CJW	06/11
EC501724	C	MODIFIED PERIMETER LIGHT CIRCUIT FROM 1 CB TO 3	CJW	08/11
EC501821	D	UPDATE AS BUILT	CJW	08/11
EC502003	E	ADDED DRONE KIT, SHT 7, NEW CB SHT 4	CJW	09-22-11
EC502615	F	ADD ECM CONNECTOR, UPDATE SAT RADIO CABLE PN	CJW	01-05-12
EC502345	G	ADDED DRONE CAMERA KIT OPTION	DAS	01-09-12
EC502851	H	UPDATED JUPITER CABLES AS BUILT, SEE EC FOR CHANGE DETAIL	CJW	02-08-12

DRAWING TITLE/DESCRIPTION:
ELECTRICAL SCHEMATIC
Can:14 Analog Module

MACHINE TYPE-MODEL:
MARK IV

E3 PROJECT FILE NAME:
MARK IV HD_10

SHEET NUMBER: J14
NUMBER OF JUPITER SHEETS: 19
TOTAL NUMBER OF SHEETS: 30

DRAWN BY: CJW
REL. DATE: 05/11
SIZE: D
SCALE:

HARSCO RAIL

E3 DRAWING
5007950

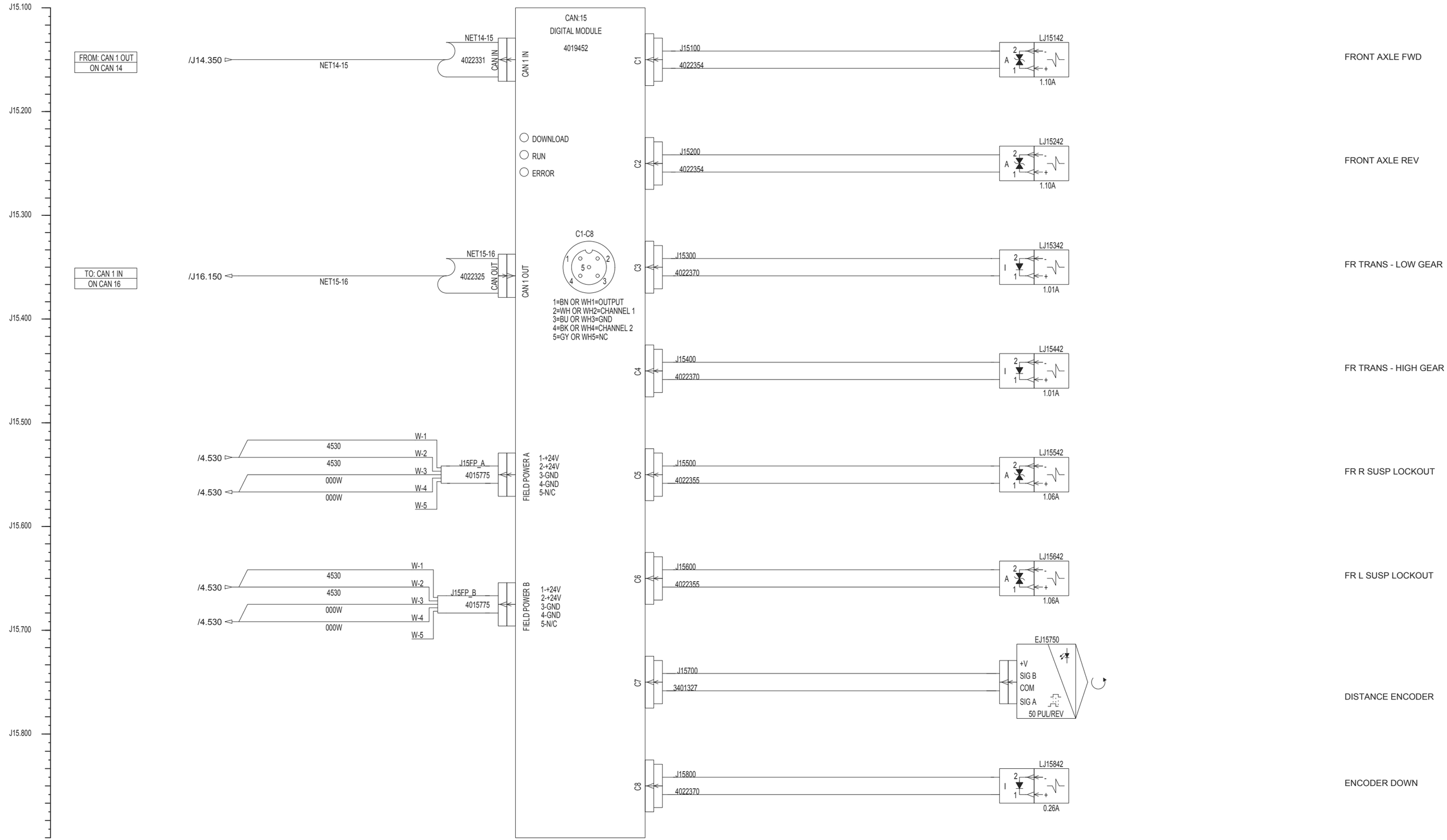

CONFIDENTIAL

©COPYRIGHT 2011 HARSCO. THIS DRAWING OR DOCUMENT IS THE PROPERTY OF HARSCO AND EMBODIES CONFIDENTIAL INFORMATION, TRADE SECRET INFORMATION, AND/OR KNOW-HOW THAT IS THE PROPERTY OF HARSCO. BY ACCEPTING THIS DRAWING OR DOCUMENT, THE RECIPIENT AGREES (1) NOT TO PROVIDE, OR OTHERWISE MAKE AVAILABLE, THE DRAWING OR DOCUMENT, OR ANY INFORMATION OR KNOW-HOW EMBODIED THEREIN, TO ANY THIRD PARTY AND (2) NOT TO REPRODUCE OR USE THE DRAWING OR DOCUMENT TO MANUFACTURE ANY APPARATUS OR DEVICE, WITHOUT THE PRIOR WRITTEN AUTHORIZATION OF HARSCO.

CHANGE #		REVISION	DR	DATE
EC503310	I	SEE EC FOR CHANGE DETAIL	CJW	04-05-12
EC501420	B	UPDATE AS BUILT	CJW	06/11
EC501724	C	MODIFIED PERIMETER LIGHT CIRCUIT FROM 1 CB TO 3	CJW	08/11
EC501821	D	UPDATE AS BUILT	CJW	08/11
EC502003	E	ADDED DRONE KIT, SHT 7, NEW CB SHT 4	CJW	09-22-11
EC502615	F	ADD ECM CONNECTOR, UPDATE SAT RADIO CABLE PN	CJW	01-05-12
EC502345	G	ADDED DRONE CAMERA KIT OPTION	DAS	01-09-12
EC502851	H	UPDATED JUPITER CABLES AS BUILT, SEE EC FOR CHANGE DETAIL	CJW	02-08-12

DRAWING TITLE/DESCRIPTION:
ELECTRICAL SCHEMATIC
Can:15 Digital Module

MACHINE TYPE-MODEL:
MARK IV

E3 PROJECT FILE NAME:
MARK IV HD_10

SHEET NUMBER: J15
NUMBER OF JUPITER SHEETS: 19
TOTAL NUMBER OF SHEETS: 30

DRAWN BY: CJW
REL. DATE: 05/11
SIZE: D
SCALE:

HARSCO RAIL

E3 DRAWING
5007950

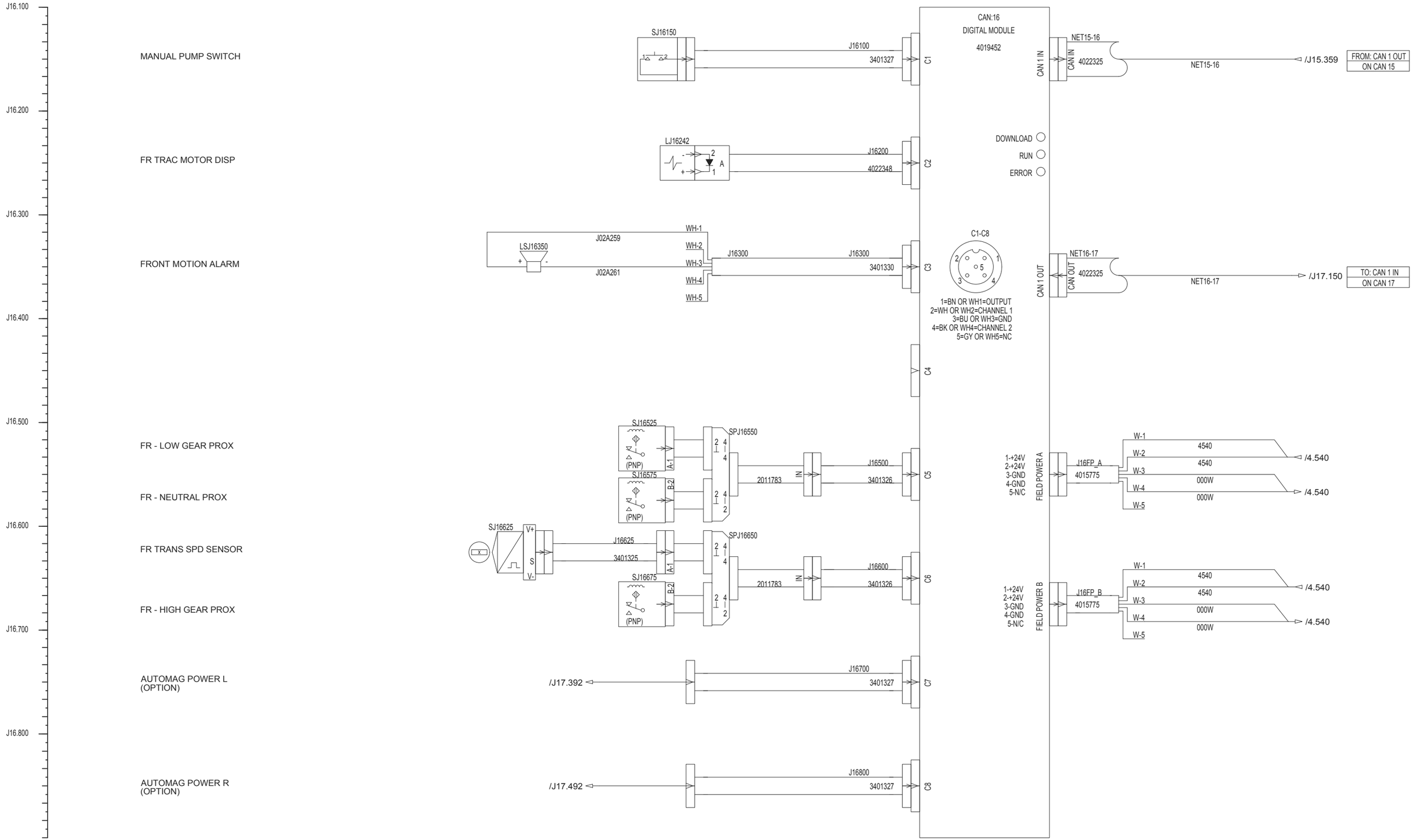

CONFIDENTIAL

©COPYRIGHT 2011 HARSCO. THIS DRAWING OR DOCUMENT IS THE PROPERTY OF HARSCO AND EMBODIES CONFIDENTIAL INFORMATION, TRADE SECRET INFORMATION, AND/OR KNOW-HOW THAT IS THE PROPERTY OF HARSCO. BY ACCEPTING THIS DRAWING OR DOCUMENT, THE RECIPIENT AGREES (1) NOT TO PROVIDE, OR OTHERWISE MAKE AVAILABLE, THE DRAWING OR DOCUMENT, OR ANY INFORMATION OR KNOW-HOW EMBODIED THEREIN, TO ANY THIRD PARTY AND (2) NOT TO REPRODUCE OR USE THE DRAWING OR DOCUMENT TO MANUFACTURE ANY APPARATUS OR DEVICE, WITHOUT THE PRIOR WRITTEN AUTHORIZATION OF HARSCO.

CHANGE #		REVISION	DR	DATE
EC503310	I	SEE EC FOR CHANGE DETAIL	CJW	04-05-12
EC501420	B	UPDATE AS BUILT	CJW	06/11
EC501724	C	MODIFIED PERIMETER LIGHT CIRCUIT FROM 1 CB TO 3	CJW	08/11
EC501821	D	UPDATE AS BUILT	CJW	08/11
EC502003	E	ADDED DRONE KIT, SHT 7, NEW CB SHT 4	CJW	09-22-11
EC502615	F	ADD ECM CONNECTOR, UPDATE SAT RADIO CABLE PN	CJW	01-05-12
EC502345	G	ADDED DRONE CAMERA KIT OPTION	DAS	01-09-12
EC502851	H	UPDATED JUPITER CABLES AS BUILT, SEE EC FOR CHANGE DETAIL	CJW	02-08-12

DRAWING TITLE/DESCRIPTION:
ELECTRICAL SCHEMATIC
Can:16 Digital Module

MACHINE TYPE-MODEL:
MARK IV

E3 PROJECT FILE NAME:
MARK IV HD_10

SHEET NUMBER: J16
NUMBER OF JUPITER SHEETS: 19
TOTAL NUMBER OF SHEETS: 30

DRAWN BY: CJW
REL. DATE: 05/11
SIZE: D
SCALE:

HARSCO RAIL

E3 DRAWING
5007950

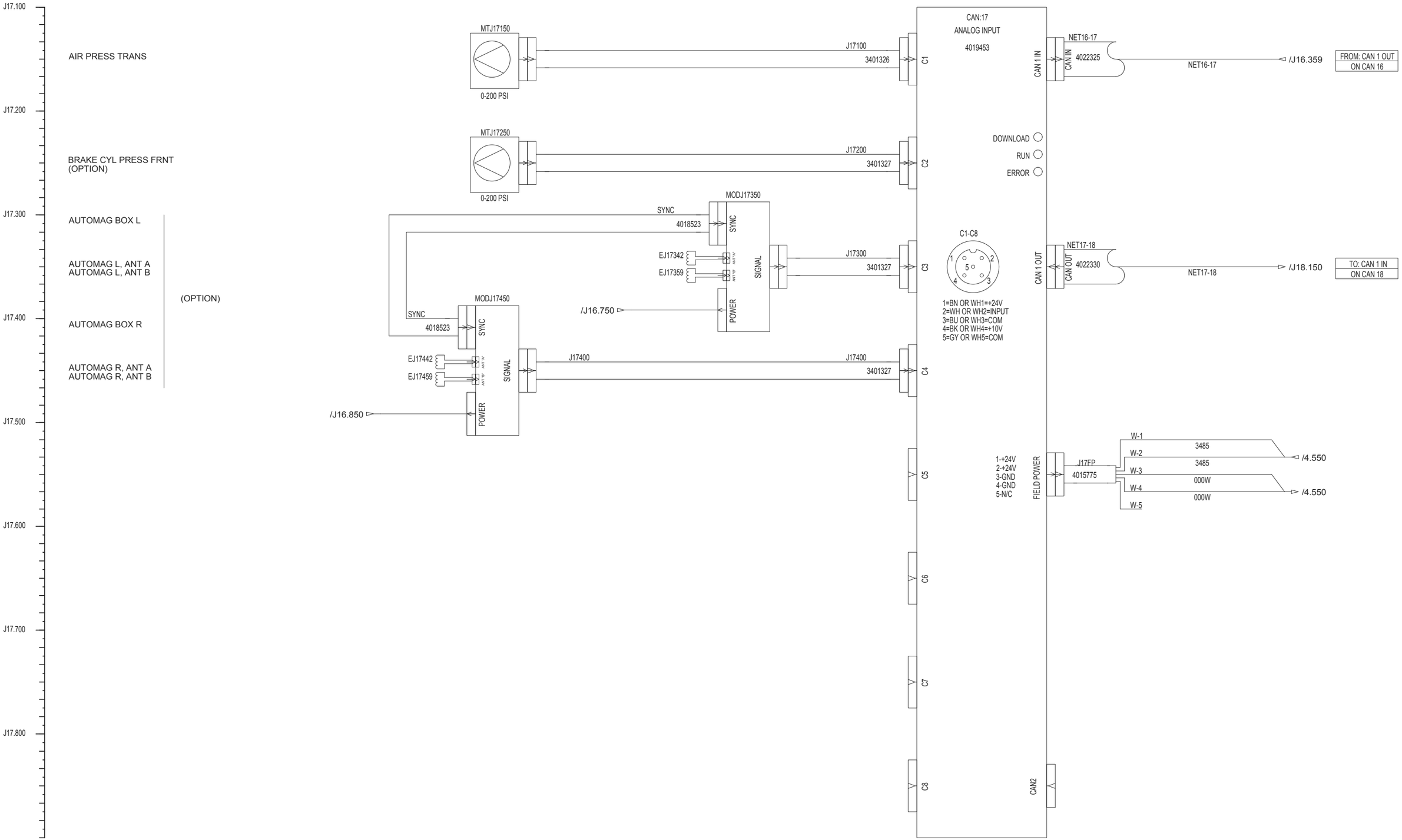

CONFIDENTIAL

©COPYRIGHT 2011 HARSCO. THIS DRAWING OR DOCUMENT IS THE PROPERTY OF HARSCO AND EMBODIES CONFIDENTIAL INFORMATION, TRADE SECRET INFORMATION, AND/OR KNOW-HOW THAT IS THE PROPERTY OF HARSCO. BY ACCEPTING THIS DRAWING OR DOCUMENT, THE RECIPIENT AGREES (1) NOT TO PROVIDE, OR OTHERWISE MAKE AVAILABLE, THE DRAWING OR DOCUMENT, OR ANY INFORMATION OR KNOW-HOW EMBODIED THEREIN, TO ANY THIRD PARTY AND (2) NOT TO REPRODUCE OR USE THE DRAWING OR DOCUMENT TO MANUFACTURE ANY APPARATUS OR DEVICE, WITHOUT THE PRIOR WRITTEN AUTHORIZATION OF HARSCO.

CHANGE #		REVISION	DR	DATE
EC503310	I	SEE EC FOR CHANGE DETAIL	CJW	04-05-12
EC501420	B	UPDATE AS BUILT	CJW	06/11
EC501724	C	MODIFIED PERIMETER LIGHT CIRCUIT FROM 1 CB TO 3	CJW	08/11
EC501821	D	UPDATE AS BUILT	CJW	08/11
EC502003	E	ADDED DRONE KIT, SHT 7, NEW CB SHT 4	CJW	09-22-11
EC502615	F	ADD ECM CONNECTOR, UPDATE SAT RADIO CABLE PN	CJW	01-05-12
EC502345	G	ADDED DRONE CAMERA KIT OPTION	DAS	01-09-12
EC502851	H	UPDATED JUPITER CABLES AS BUILT, SEE EC FOR CHANGE DETAIL	CJW	02-08-12

DRAWING TITLE/DESCRIPTION:
ELECTRICAL SCHEMATIC
Can:17 Analog Module

MACHINE TYPE-MODEL:
MARK IV

E3 PROJECT FILE NAME:
MARK IV HD_10

SHEET NUMBER: J17
NUMBER OF JUPITER SHEETS: 19
TOTAL NUMBER OF SHEETS: 30

DRAWN BY: CJW
REL. DATE: 05/11
SIZE: D
SCALE:

HARSCO RAIL

E3 DRAWING
5007950

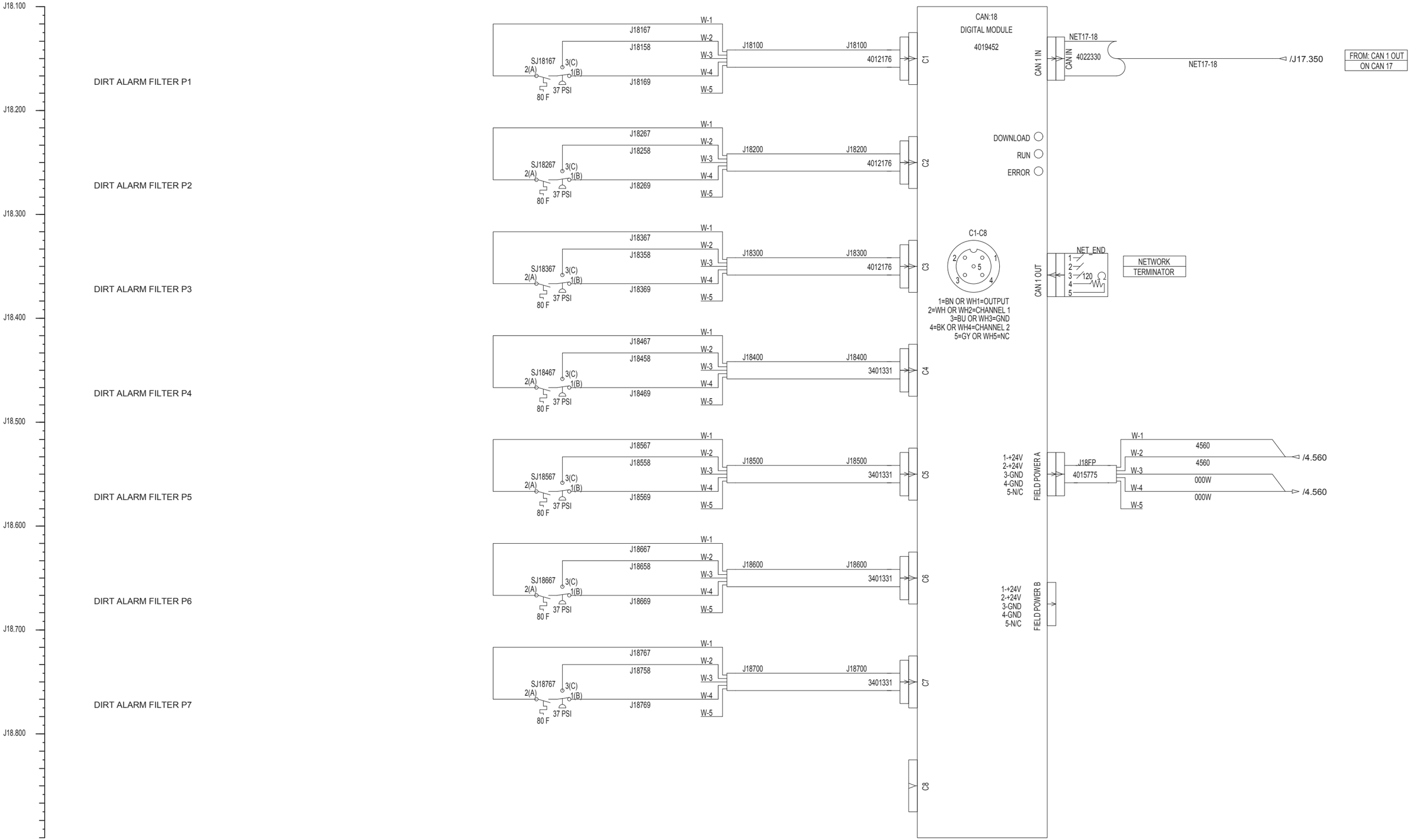

CONFIDENTIAL

©COPYRIGHT 2011 HARSCO. THIS DRAWING OR DOCUMENT IS THE PROPERTY OF HARSCO AND EMBODIES CONFIDENTIAL INFORMATION, TRADE SECRET INFORMATION, AND/OR KNOW-HOW THAT IS THE PROPERTY OF HARSCO. BY ACCEPTING THIS DRAWING OR DOCUMENT, THE RECIPIENT AGREES (1) NOT TO PROVIDE, OR OTHERWISE MAKE AVAILABLE, THE DRAWING OR DOCUMENT, OR ANY INFORMATION OR KNOW-HOW EMBODIED THEREIN, TO ANY THIRD PARTY AND (2) NOT TO REPRODUCE OR USE THE DRAWING OR DOCUMENT TO MANUFACTURE ANY APPARATUS OR DEVICE, WITHOUT THE PRIOR WRITTEN AUTHORIZATION OF HARSCO.

CHANGE #		REVISION	DR	DATE
EC503310	I	SEE EC FOR CHANGE DETAIL	CJW	04-05-12
EC501420	B	UPDATE AS BUILT	CJW	06/11
EC501724	C	MODIFIED PERIMETER LIGHT CIRCUIT FROM 1 CB TO 3	CJW	08/11
EC501821	D	UPDATE AS BUILT	CJW	08/11
EC502003	E	ADDED DRONE KIT, SHT 7, NEW CB SHT 4	CJW	09-22-11
EC502615	F	ADD ECM CONNECTOR, UPDATE SAT RADIO CABLE PN	CJW	01-05-12
EC502345	G	ADDED DRONE CAMERA KIT OPTION	DAS	01-09-12
EC502851	H	UPDATED JUPITER CABLES AS BUILT, SEE EC FOR CHANGE DETAIL	CJW	02-08-12

DRAWING TITLE/DESCRIPTION:
ELECTRICAL SCHEMATIC
Can:18 Digital Module

MACHINE TYPE-MODEL:
MARK IV

E3 PROJECT FILE NAME:
MARK IV HD_10

SHEET NUMBER: J18
NUMBER OF JUPITER SHEETS: 19
TOTAL NUMBER OF SHEETS: 30

DRAWN BY: CJW
REL. DATE: 05/11
SIZE: D
SCALE:

HARSCO RAIL

E3 DRAWING
5007950

CIRCUIT BREAKERS / FUSES

DEVICE	SHT LOC	AMP	DESCRIPTION	LOCATION	PART NUMBER
CB1120	/1.120	125 AMP	PDB POWER	PDB	C9678Y24
CB6160	/6.160	5 AMP	SATELLITE RADIO	OPT SAT RADIO	C9678Y08
CB1130	/1.120	125 AMP	MCB POWER	PDB	C9678Y24
CB1135	/1.131	30 AMP	3PIN OEM CONN	I/C	4024977
CB1245	/1.248	5 AMP	ENGINE PROTECTION LTS	MCB	C9678Y08
CB1260	/1.261	15 AMP	IGNITION / JUPITER SWITCH PWR	MCB	C9678Y10
CB1295	/1.298	5 AMP	IGNITION INPUT POWER	MCB	C9678Y08
CB1450	/1.450	125 AMP	GRID HEATER POWER	PDB	C9678Y24
CB1460	/1.460	1 AMP	ENGINE 9-PIN POWER	PDB	C9678Y31
CB2120	/2.120	30 AMP	A/C POWER	MCB	C9678Y12
CB2170	/2.170	20 AMP	WORK LIGHT SWITCHES	MCB	C9678Y11
CB2450	/2.450	20 AMP	CAB FANS/SEAT POWER	MCB	C9678Y11
CB2600	/2.600	20 AMP	WORK/BOX LIGHTS	PDB	C9678Y11
CB3110	/3.110	20 AMP	BRAKE/DRIVE LIGHTS PWR	MCB	C9678Y11
CB4110	/4.110	10 AMP	J42 POWER	MCB	C9678Y09
CB4120	/4.120	8 AMP	CAN:02 POWER	MCB	C9678Y23
CB4130	/4.130	8 AMP	CAN:03 POWER	MCB	C9678Y23
CB4140	/4.140	15 AMP	CAN:04 POWER	MCB	C9678Y10
CB4150	/4.150	15 AMP	CAN:05 POWER	MCB	C9678Y10
CB4160	/4.160	15 AMP	CAN:06 POWER	MCB	C9678Y10
CB4170	/4.170	20 AMP	ACTUATOR/RECEIVR PWR	MCB	C9678Y11
CB4190	/4.190	20 AMP	AC PWR SUPPLY	MCB	C9678Y11
CB4220	/4.220	10 AMP	LINER PROJ PWR	MCB	C9678Y09
CB4240	/4.241	10 AMP	LASER POWER	MCB	C9678Y09
CB4260	/4.261	10 AMP	SURFACE PROJ PWR	MCB	C9678Y09
CB4280	/4.280	8 AMP	DRONE SYSTEM PWR	OPT DRONE KIT	C9678Y23
CB4450	/4.450	15 AMP	CAN:07 POWER	PDB	C9678Y10
CB4460	/4.460	15 AMP	CAN:08 POWER	PDB	C9678Y10
CB4470	/4.470	15 AMP	CAN:09 POWER	PDB	C9678Y10
CB4480	/4.480	15 AMP	CAN:10 POWER	PDB	C9678Y10
CB4490	/4.490	15 AMP	CAN:11 POWER	PDB	C9678Y10
CB4500	/4.500	15 AMP	CAN:12 POWER	PDB	C9678Y10
CB4510	/4.510	15 AMP	CAN:13 POWER	PDB	C9678Y10
CB4520	/4.520	8 AMP	CAN:14 POWER	PDB	C9678Y23
CB4530	/4.530	15 AMP	CAN:15 POWER	PDB	C9678Y10
CB4540	/4.540	15 AMP	CAN:16 POWER	PDB	C9678Y10
CB4550	/4.550	8 AMP	CAN:17 POWER	PDB	C9678Y23
CB4560	/4.560	8 AMP	CAN:18 POWER	OPT FILTER KITS	C9678Y23
CB5120	/5.120	10 AMP	FUEL HEATER	OPT FUEL HTR	C9678Y09
CB5140	/5.140	20 AMP	AUX WORK LIGHTS	OPT AUX WK LTS	C9678Y11
CB5210	/5.210	10 AMP	PERIMETER LTS LEFT	OPT PERIM LTS	C9678Y09
CB5240	/5.240	10 AMP	PERIMETER LTS RIGHT	OPT PERIM LTS	C9678Y09
CB5270	/5.270	10 AMP	PERIMETER LTS CAB	OPT PERIM LTS	C9678Y09
CB5450	/5.450	15 AMP	LOWER WIPERS	OPT LWR WIPERS	C9678Y10
CB5580	/5.580	20 AMP	DC PWR SUPPLY	OPT RADIO	C9678Y11
CB6120	/6.120	10 AMP	HYD TOP OFF	OPT HYD TOP-OFF	C9678Y09
(I) F1200	/1.193	10 AMP	ALTERNATOR FUSE	I/C	5011353

RELAYS

DEVICE	SHEET LOCATION COIL	SHEET LOCATION CONTACTS		DESCRIPTION	LOCATION	PART NUMBER
K1150	/1.150			EMERGENCY PUMP	FRAME	0-3316003-0-04
K1233	/1.233	/2.113		CAB POWER RELAY	MCB	172164
K1265	/1.265	/1.175		STR SLAVE RLY 1	ENGINE	172164
K1275	/1.275	/1.235		STR SLAVE RLY 2	MCB	D0650Y07
K1295	/1.295	/4.450		COMPUTER ON 1	PDB	172164
K1304	/1.304	/4.450		COMPUTER ON 2	PDB	172164
K1320	/1.320	/4.110		COMPUTER ON 3	MCB	172164
K1328	/1.328	/4.110		COMPUTER ON 4	MCB	172164
K1505	/1.507	/1.450		GRID HEATER RELAY	ENGINE	172164
K2180	/2.180	/2.600		WORK LIGHT RELAY	PDB	172164
K2210	/2.210	/5.140		AUX WORK LIGHT RELAY	OPT AUX WK LTS	172164
K2280	/2.280	/3.110	/3.138	FRONT MAIN TRVL RLY	MCB	D0650Y07
K2300	/2.300	/3.228	/3.198	REAR MAIN TRAVEL RELAY	MCB	D0650Y07
K2320	/2.320	/5.200		PERIMETER LIGHTS	OPT PERIM LTS	172164
KJ06392	/J06.392		/4.260	SURFACE PROJECTOR RELAY	MCB	D0650Y07
KJ06425	/J06.425	/4.230	/4.251	RT LINER PROJECTOR RELAY	MCB	D0650Y07
KJ06459	/J06.459	/4.221	/4.241	LT LINER PROJECTOR RELAY	MCB	D0650Y07

DIODES

DEVICE	SHT LOC	DESCRIPTION	LOCATION	PART NUMBER
CR1240	/1.240	CAB POWER RELAY	MCB	F040174
CR1265	/1.259	STARTER SLAVE RELAY	ENGINE	F040174
CR1305	/1.312	COMPUTER ON 1 & 2	PDB	F040174
CR1330	/1.335	COMPUTER ON 3 & 4	MCB	F040174
CR2188	/2.188	WORK LIGHT RELAY	PDB	F040174
CR2218	/2.218	AUX WORK LIGHT RELAY	OPT AUX WK LTS	F040174
CR2328	/2.328	PERIMETER LIGHTS	OPT PERIM LTS	F040174

TRANSDUCERS

DEVICE	SHT LOC	DESCRIPTION	LOCATION	PART NUMBER
MTJ03250	/J03.250	WH SQZ PRESS TRANS	WORKHEAD	4008374
MTJ03450	/J03.450	LT CLAMP PRESS TRANS	WORKHEAD	4008374
MTJ03550	/J03.550	RT CLAMP PRESS TRANS	WORKHEAD	4008374
MTJ03650	/J03.650	INCLINOMETER	JUP INSTALL	0-3150005-0-01
MTJ03750	/J03.750	BRAKE CYL PRESS REAR	OPT BRAKE PRESS	3400894
MTJ14650	/J14.650	P1 PUMP PRESS TRANS	HYD SYSTEM	4008374
MTJ14750	/J14.750	P2 PUMP PRESS TRANS	HYD SYSTEM	4008374
MTJ17150	/J17.151	AIR PRESS TRANS	AIR TANK	3400894
MTJ17250	/J17.250	BRAKE CYL PRESS FRNT	OPT BRAKE PRESS	3400894

SPLITTERS

DEVICE	SHT LOC	DESCRIPTION	LOCATION	PART NUMBER
SPJ09150	/J09.150	LT CLAMP LIMIT SW	COMBO_CLAMP	414260
SPJ09250	/J09.250	CLAMP OUTER LIMIT SW	COMBO_CLAMP	414260
SPJ09350	/J09.350	RT CLAMP LIMIT SW	COMBO_CLAMP	414260
SPJ05350	/J05.350	RR GEARBOX SWITCHES	JUP INSTALL	2011783
SPJ05450	/J05.450	RR GEARBOX SWITCHES	JUP INSTALL	2011783
SPJ14850	/J14.850	ENG_J1939 CAN	OPT SAT RADIO	2014920
SPJ16550	/J16.550	FR GEARBOX SWITCHES	JUP INSTALL	2011783
SPJ16650	/J16.650	FR GEARBOX SWITCHES	JUP INSTALL	2011783

ANTENNAS

DEVICE	SHT LOC	DESCRIPTION	LOCATION	PART NUMBER
E7123	/7.123	DRONE ANTENNA	OPT DRONE KIT	4021221
EJ17342	/J17.342	AUTOMAG L, ANT A	OPT TIE FINDER	4012592
EJ17359	/J17.359	AUTOMAG L, ANT B	OPT TIE FINDER	4012592
EJ17442	/J17.442	AUTOMAG R, ANT A	OPT TIE FINDER	4012592
EJ17459	/J17.459	AUTOMAG R, ANT B	OPT TIE FINDER	4012592

LIGHTS AND INDICATORS

DEVICE	SHT LOC	DESCRIPTION	LOCATION	PART NUMBER	BULB PART NO.
DS1600	/1.600	ENGINE STOP LIGHT	ECP	EAL/R24STOP	ASSEMBLY
DS1610	/1.610	ENGINE WARNING LIGHT	ECP	EAL/Y24	ASSEMBLY
DS1620	/1.620	ENGINE WAIT TO START LIGHT	ECP	EAL/Y24WARNING	ASSEMBLY
LT2490	/2.491	CAB DOME LIGHT	CAB	0-2301261-0-01	0-3101012-0-00
LT2503	/2.503	CAB BEACON LIGHT	OPT STOBE LIGHT	200232	
LT2590	/2.590	WORK LIGHT	I/C	174288	174290
LT2600	/2.600	WORK LIGHT	I/C	174288	174290
LT2610	/2.610	WORK LIGHT	I/C	174288	174290
LT2620	/2.620	WORK LIGHT	I/C	174288	174290
LT3110	/3.110	LEFT FRONT DRIVE LIGHT	I/C	174287	174289
LT3120	/3.120	LEFT FRONT SPOT LIGHT	I/C	A2197Y09	A2197Y10
LT3140	/3.141	RIGHT FRONT DRIVE LIGHT	I/C	174287	174289
LT3150	/3.151	RIGHT FRONT SPOT LIGHT	I/C	A2197Y09	A2197Y10
LT3165	/3.165	REAR TAIL LIGHT	CAB	4014750	
LT3183	/3.183	REAR TAIL LIGHT	CAB	4014750	
LT3200	/3.200	LEFT REAR DRIVE LIGHT	CAB	174287	174289
LT3210	/3.210	LEFT REAR SPOT LIGHT	CAB	A2197Y09	A2197Y10
LT3220	/3.220	RIGHT REAR DRIVE LIGHT	CAB	174287	174289
LT3230	/3.230	RIGHT REAR SPOT LIGHT	CAB	A2197Y09	A2197Y10
LT3250	/3.250	LEFT FRONT TAIL LIGHT	I/C	4014750	
LT3270	/3.270	RIGHT FRONT TAIL LIGHT	I/C	4014750	
LT5140	/5.140	AUX WORK LIGHT	OPT AUX WK LTS	A2197Y06	
LT5150	/5.150	AUX WORK LIGHT	OPT AUX WK LTS	A2197Y06	
LT5160	/5.160	AUX WORK LIGHT	OPT AUX WK LTS	A2197Y06	
LT5170	/5.170	AUX WORK LIGHT	OPT AUX WK LTS	A2197Y06	
LT5180	/5.180	AUX WORK LIGHT	OPT AUX WK LTS	A2197Y06	
LT5190	/5.190	AUX WORK LIGHT	OPT AUX WK LTS	A2197Y06	
LT5210	/5.210	LT FR PERIMETER LIGHT	OPT PERIM LTS	A2197Y06	
LT5220	/5.220	LT MID PERIMETER LIGHT	OPT PERIM LTS	A2197Y06	
LT5230	/5.230	LT WH PERIMETER LIGHT	OPT PERIM LTS	A2197Y06	
LT5240	/5.240	RT FR PERIMETER LIGHT	OPT PERIM LTS	A2197Y06	
LT5250	/5.250	RT MID PERIMETER LIGHT	OPT PERIM LTS	A2197Y06	
LT5260	/5.260	RT WH PERIMETER LIGHT	OPT PERIM LTS	A2197Y06	
LT5270	/5.270	LT CAB PERIMTER LIGHT	OPT PERIM LTS	A2197Y06	
LT5280	/5.280	RT CAB PERIMTER LT	OPT PERIM LTS	A2197Y06	
LT5300	/5.300	MCB CABINET LIGHT	OPT CABINET LT	F040972	F041170
LT5313	/5.313	PDB CABINET LIGHT	OPT CABINET LT	F040972	F041170

CONFIDENTIAL

©COPYRIGHT 2011 HARSCO. THIS DRAWING OR DOCUMENT IS THE PROPERTY OF HARSCO AND EMBODIES CONFIDENTIAL INFORMATION, TRADE SECRET INFORMATION, AND/OR KNOW-HOW THAT IS THE PROPERTY OF HARSCO. BY ACCEPTING THIS DRAWING OR DOCUMENT, THE RECIPIENT AGREES (1) NOT TO PROVIDE, OR OTHERWISE MAKE AVAILABLE, THE DRAWING OR DOCUMENT, OR ANY INFORMATION OR KNOW-HOW EMBODIED THEREIN, TO ANY THIRD PARTY AND (2) NOT TO REPRODUCE OR USE THE DRAWING OR DOCUMENT TO MANUFACTURE ANY APPARATUS OR DEVICE, WITHOUT THE PRIOR WRITTEN AUTHORIZATION OF HARSCO.

CHANGE #		REVISION	DR	DATE
EC503310	I	SEE EC FOR CHANGE DETAIL	CJW	04-05-12
EC501420	B	UPDATE AS BUILT	CJW	06/11
EC501724	C	MODIFIED PERIMETER LIGHT CIRCUIT FROM 1 CB TO 3	CJW	08/11
EC501821	D	UPDATE AS BUILT	CJW	08/11
EC502003	E	ADDED DRONE KIT, SHT 7, NEW CB SHT 4	CJW	09-22-11
EC502615	F	ADD ECM CONNECTOR, UPDATE SAT RADIO CABLE PN	CJW	01-05-12
EC502345	G	ADDED DRONE CAMERA KIT OPTION	DAS	01-09-12
EC502851	H	UPDATED JUPITER CABLES AS BUILT, SEE EC FOR CHANGE DETAIL	CJW	02-08-12

DRAWING TITLE/DESCRIPTION: ELECTRICAL SCHEMATIC Reference

MACHINE TYPE-MODEL: MARK IV

E3 PROJECT FILE NAME: MARK IV HD_10

SHEET NUMBER: X1

NUMBER OF JUPITER SHEETS: 19

TOTAL NUMBER OF SHEETS: 30

DRAWN BY: CJW

REL. DATE: 05/11

SIZE: D

SCALE:

HARSCO RAIL

E3 DRAWING

5007950

SOLENOIDS

DEVICE	SHT LOC	DESCRIPTION	LOCATION	PART NUMBER
L1210	/1.211	SPRING BRAKE BLOWDOWN	FRAME	0-3413003-0-15
L1220	/1.218	E-STOP BRAKE VALVE	FRAME	5006344
L2142	/2.143	A/C RELIEF VALVE	A/C	0-3334011-0-03
L2150	/2.150	VENT SOLENOID	A/C	A0729Y06
L2630	/2.628	AIR BLOWDOWN VALVE	OPT AIR BLOWDOWN	5006344
LJ04142	/J04.142	REAR AXLE REV	REAR_AXL	SOL-COIL
LJ04242	/J04.242	REAR AXLE FWD	REAR_AXL	SOL-COIL
LJ04342	/J04.342	RR TRANS - LOW GEAR	REAR_AXL	SOL-COIL
LJ04442	/J04.442	RR TRANS - HIGH GEAR	REAR_AXL	SOL-COIL
LJ04542	/J04.542	RR L SUSP LOCKOUT		SOL-COIL
LJ04642	/J04.642	RR R SUSP LOCKOUT		SOL-COIL
LJ04742	/J04.742	INDEX BRAKE	FRONT	SOL-COIL
LJ04842	/J04.842	WH LKUP RLS	FRONT	SOL-COIL
LJ05542	/J05.542	AIR HORN VALVE	AIR TANK	SOL-COIL
LJ05642	/J05.642	RECEIVER BIAS LEFT	RCV_BG	SOL-COIL
LJ05742	/J05.742	RECEIVER BIAS RIGHT	RCV_BG	SOL-COIL
LJ05842	/J05.842	RR TRAC MOTOR DISP	REAR TRANS	SOL-COIL
LJ07142	/J07.142	LF WH VLV1 UPFD	WORKHEAD	SOL-COIL
LJ07242	/J07.242	LF WH VLV1 DWNFD	WORKHEAD	SOL-COIL
LJ07342	/J07.342	LF WH VLV2 UPFD	WORKHEAD	SOL-COIL
LJ07442	/J07.442	LF WH VLV2 DWNFD	WORKHEAD	SOL-COIL
LJ07542	/J07.542	RT WH VLV2 UPFD	WORKHEAD	SOL-COIL
LJ07642	/J07.642	RT WH VLV2 DWNFD	WORKHEAD	SOL-COIL
LJ07742	/J07.742	RT WH VLV1 UPFD	WORKHEAD	SOL-COIL
LJ07842	/J07.842	RT WH VLV1 DWNFD	WORKHEAD	SOL-COIL
LJ08142	/J08.142	RT WH TRVS OUT	WORKHEAD	SOL-COIL
LJ08242	/J08.242	RT WH TRVS IN	WORKHEAD	SOL-COIL
LJ08342	/J08.342	LT WH TRVS OUT	WORKHEAD	SOL-COIL
LJ08442	/J08.442	LT WH TRVS IN	WORKHEAD	SOL-COIL
LJ08542	/J08.542	RT WH SQZ OUT	WORKHEAD	SOL-COIL
LJ08642	/J08.642	RT WH SQZ IN	WORKHEAD	SOL-COIL
LJ08742	/J08.742	LT WH SQZ OUT	WORKHEAD	SOL-COIL
LJ08842	/J08.842	LT WH SQZ IN	WORKHEAD	SOL-COIL
LJ10142	/J10.142	WARM UP RT	NEAR FUEL TANK	SOL-COIL
LJ10242	/J10.242	WARM UP LF	NEAR FUEL TANK	SOL-COIL
LJ10342	/J10.342	SDWBD BIAS LEFT	RS_FRAME	SOL-COIL
LJ10442	/J10.442	SDWBD BIAS RIGHT	RS_FRAME	SOL-COIL
LJ10542	/J10.542	CLAMP FRAME LOCK	RS_FRAME	SOL-COIL
LJ10642	/J10.642	HYD FAN CTRL VALVE	HYD TANK	SOL-COIL
LJ10742	/J10.742	TIE MARKER	NEAR FUEL TANK	SOL-COIL
LJ11142	/J11.142	RIGHT HOOK IN	NEAR FUEL TANK	SOL-COIL
LJ11242	/J11.242	RIGHT HOOK OUT	NEAR FUEL TANK	SOL-COIL
LJ11342	/J11.342	RT HOOK REGEN IN	NEAR FUEL TANK	SOL-COIL
LJ11442	/J11.442	RT HOOK REGEN OUT	NEAR FUEL TANK	SOL-COIL
LJ11542	/J11.542	RT HAND SLEW REV	NEAR FUEL TANK	SOL-COIL
LJ11642	/J11.642	RT HAND SLEW FWD	NEAR FUEL TANK	SOL-COIL
LJ11742	/J11.742	CLAMP BIAS	NEAR FUEL TANK	SOL-COIL
LJ11842	/J11.842	PUMP CTRL VALVE	HYD SYSTEM	SOL-COIL
LJ12142	/J12.142	RT HAND JACK UP	NEAR FUEL TANK	SOL-COIL
LJ12242	/J12.242	RT HAND JACK DOWN	NEAR FUEL TANK	SOL-COIL
LJ12342	/J12.342	LT HAND JACK UP	NEAR FUEL TANK	SOL-COIL
LJ12442	/J12.442	LT HAND JACK DOWN	NEAR FUEL TANK	SOL-COIL
LJ12542	/J12.542	RIGHT VIBRATOR	NEAR FUEL TANK	SOL-COIL
LJ12642	/J12.642	LEFT VIBRATOR	NEAR FUEL TANK	SOL-COIL
LJ12742	/J12.742	LINER FLOAT	NEAR FUEL TANK	SOL-COIL
LJ12842	/J12.842	DECEL VALVE	WORKHEAD	SOL-COIL
LJ13142	/J13.142	LINE LEFT	NEAR FUEL TANK	SOL-COIL
LJ13242	/J13.242	LINE RIGHT	NEAR FUEL TANK	SOL-COIL
LJ13342	/J13.342	LEFT HOOK IN	NEAR FUEL TANK	SOL-COIL
LJ13442	/J13.442	LEFT HOOK OUT	NEAR FUEL TANK	SOL-COIL
LJ13542	/J13.542	LT HOOK REGEN IN	NEAR FUEL TANK	SOL-COIL
LJ13642	/J13.642	LT HOOK REGEN OUT	NEAR FUEL TANK	SOL-COIL
LJ13742	/J13.742	LT HAND SLEW REV	NEAR FUEL TANK	SOL-COIL
LJ13842	/J13.842	LT HAND SLEW FWD	NEAR FUEL TANK	SOL-COIL
LJ15142	/J15.142	FRONT AXLE FWD	FRONT AXLE	SOL-COIL
LJ15242	/J15.242	FRONT AXLE REV	FRONT AXLE	SOL-COIL
LJ15342	/J15.342	FR TRANS - LOW GEAR	FRONT AXLE	SOL-COIL
LJ15442	/J15.442	FR TRANS - HIGH GEAR	FRONT AXLE	SOL-COIL
LJ15542	/J15.542	FR R SUSP LOCKOUT	FRONT	SOL-COIL
LJ15642	/J15.642	FR L SUSP LOCKOUT	FRONT	SOL-COIL
LJ15842	/J15.842	ENCODER DOWN	FRONT	SOL-COIL
LJ16242	/J16.242	FR TRAC MOTOR DISP	FRONT TRANS	SOL-COIL

CAN MODULES

DEVICE	SHT LOC	DESCRIPTION	LOCATION	PART NUMBER
J42	/J01.442	JUPITER OSCILLATOR	CAB	4022695
CAN:01	/J01.209	JAMBOX	CAB	4015854
CAN:02	/J02A.100	DIGITAL MODULE	RHC	4019452
CAN:03	/J03.109	ANALOG INPUT MODULE	JUP INSTALL	4019453
CAN:04	/J04.100	DIGITAL MODULE	JUP INSTALL	4019452
CAN:05	/J05.100	DIGITAL MODULE	JUP INSTALL	4019452
CAN:06	/J06.092	HDIO MODULE	MCB	4028741
CAN:07	/J07.100	DIGITAL MODULE	JUP INSTALL	4019452
CAN:08	/J08.100	DIGITAL MODULE	JUP INSTALL	4019452
CAN:09	/J09.100	DIGITAL MODULE	JUP INSTALL	4019452
CAN:10	/J10.100	DIGITAL MODULE	JUP INSTALL	4019452
CAN:11	/J11.100	DIGITAL MODULE	JUP INSTALL	4019452
CAN:12	/J12.100	DIGITAL MODULE	JUP INSTALL	4019452
CAN:13	/J13.100	DIGITAL MODULE	JUP INSTALL	4019452
CAN:14	/J14.109	ANALOG MODULE	JUP INSTALL	4019453
CAN:15	/J15.100	DIGITAL MODULE	JUP INSTALL	4019452
CAN:16	/J16.100	DIGITAL MODULE	JUP INSTALL	4019452
CAN:17	/J17.109	ANALOG MODULE	JUP INSTALL	4019453
CAN:18	/J18.100	DIGITAL MODULE	OPT FILTER KITS	4019452
MOD7150	/7.160	DRONE COMM JAMBOX	OPT DRONE KIT	4015854

MISC COMPONENTS

DEVICE	SHT LOC	DESCRIPTION	LOCATION	PART NUMBER
AR6160	/6.161	SATELLITE RADIO	OPT SAT RADIO	H6237Y01
AR7110	/7.110	WIRELESS TRANCEIVER	OPT DRONE KIT	4018386
B2120	/2.120	AIR CONDITIONER	A/C	D6456X01
B2238	/2.238	FR WIPER MOTOR	CAB	0-3502007-0-02
B2258	/2.258	RR WIPER MOTOR	CAB	0-3502007-0-02
B2450	/2.450	CAB FAN #1	CAB	L425984
B2463	/2.463	CAB FAN #2	CAB	L425984
B2475	/2.475	CAB DOOR FAN	CAB	L425984
M2520	/2.520	SEAT CONTROLS	SEAT	C8681X01
B5468	/5.468	LEFT LOWER WIPER	OPT LWR WIPERS	0-3502007-0-12
B5510	/5.510	RIGHT LOWER WIPER	OPT LWR WIPERS	0-3502007-0-12
B6120	/6.120	HYD TOP OFF PUMP	OPT HYD TOP-OFF	3400138
BJ06592	/J06.592	RT SFC ACT MOTOR	LINER	D4713XAB
BJ06692	/J06.692	LT SFC ACT MOTOR	LINER	D4713XAB
BJ06775	/J06.775	RT LINER ACT MOTOR	LINER	D4713XAB
BJ06875	/J06.875	LT LINER ACT MOTOR	LINER	D4713XAB
BT1110	/1.110	BATTERY #1	I/C	2013244
BT1112	/1.110	BATTERY #2	I/C	2013244
EJ15750	/J15.750	DISTANCE ENCODER	FRONT AXLE	2006977
E15126	/1.460	ENGINE COMMUNICATIONS	ENGINE	4012415
HR2640	/2.641	AIR DRYER	AIR DRYER	C9785X15
KEYJ02B725	/J02B.725	RIGHT HAND KEYPAD	RHC	H1826WAB
KEYJ02B809	/J02B.809	LEFT HAND KEYPAD	LHC	H1825WAC
LSJ02A234	/J02A.234	REAR MOTION ALARM	I/C	174532
LSJ02A442	/J02A.442	COMPUTER ALARM	RHC	0-3106007-0-03
LSJ16350	/J16.350	FRONT MOTION ALARM	JUP INSTALL	174532
MG1193	/1.193	ALTERNATOR	ENGINE	0-3183005-0-02
MOD7230	/7.230	ETHERNET SWITCH	OPT DRONE KIT	3417440
MODJ02A125	/J02A.125	/J02B.125 CAN:02 EXP BOARD	RHC	4022817
MODJ06217	/J06.217	RT SURF DB RECVR	SURF	4007012
MODJ06309	/J06.309	LT SURF DB RECVR	SURF	4007012
MODJ06400	/J06.400	RT LINER RECVR	LINER	4007012
MODJ06492	/J06.492	LT LINER RECVR	LINER	4007012
MODJ06559	/J06.559	H BRIDGE DRIVER	MCB	H5614Y01
MODJ06742	/J06.742	H BRIDGE DRIVER	MCB	H5614Y01
MODJ14550	/J14.550	FUEL LEVEL TRANS	FUEL TANK	H5133WAK
MODJ17350	/J17.350	AUTOMAG BOX L	OPT TIE FINDER	4016560
MODJ17450	/J17.450	AUTOMAG BOX R	OPT TIE FINDER	4016560
MON7160	/7.160	DRONE MONITOR	OPT DRONE KIT	4015646
MONJ01209	/J01.209	MONITOR	CAB	4015040
LT3165.P1	/3.165	LEFT REAR TAIL LIGHT	CAB	4014765
LT3183.P1	/3.183	RIGHT REAR TAIL LIGHT	CAB	4014765
LT3250.P1	/3.250	LEFT FRONT TAIL LT	I/C	4014765
LT3270.P1	/3.270	RIGHT FRONT TAIL LIGHT	I/C	4014765
PS5570	/5.570	DC-DC POWER SUPPLY	OPT RADIO	B1507Y02
PS4190	/4.190	DC-AC PWR SUPPLY	CAB	A1787Y24
PSJ03650	/J03.650	INCL PWR SUPPLY	JUP INSTALL	H5133WAV
RJ03150	/J03.150	RT SURF RECVR POS	RCV_BG	Y685628-03A
RJ03350	/J03.350	LT SURF RECVR POS	RCV_BG	Y685628-03A
RJ14150	/J14.150	R/H LINER ACT POS	LINER	Y685628-03A
RJ14250	/J14.250	L/H LINER ACT POS	LINER	Y685628-03A
RJ14350	/J14.350	RT WORKHEAD STRING POT	WORKHEAD	Y685628-03A
RJ14450	/J14.450	LT WORKHEAD STRING POT	WORKHEAD	Y685628-03A
UJ01209	/J01.209	KEYBOARD	CAB	2013432

SWITCHES

DEVICE	SHEET LOCATION				DESCRIPTION	LOCATION	PART NUMBER
S1110	/1.110				BATTERY SWITCH	I/C	F025527
S1165	/1.160				EMERGENCY PUMP PB	I/C	ASSEMBLY
S1330	/1.330	/J02B.209	/1.221		E-STOP	RHC	ASSEMBLY
S1250	/1.260				IGNITION SWITCH	ECP	164824
S1285	/1.287	/1.288	/1.295	/1.265	JUPITER ON SWITCH	ECP	ASSEMBLY
S2169	/2.169	/2.170	/2.180		WORK LIGHT SWITCH	ECP	ASSEMBLY
S2200	/2.200	/2.200	/2.210		AUX WORK LIGHT SWITCH	OPT AUX WK LTS	ASSEMBLY
S2203	/5.625	/5.635	/5.645	/5.655	RIGHT ESTOP PB	OPT E-STOP	ASSEMBLY
S2206	/5.625	/5.635	/5.645	/5.655	LEFT ESTOP PB	OPT E-STOP	ASSEMBLY
S2225	/2.225	/2.228	/2.238		FR WINDOW WIPER	ECP	ASSEMBLY
S2245	/2.245	/2.248	/2.258		RR WINDOW WIPER	ECP	ASSEMBLY
S2270	/2.270	/2.270	/2.280		FR MAIN TRAVEL LIGHTS	ECP	ASSEMBLY
S2290	/2.290	/2.290	/2.300		RR MAIN TRAVEL LIGHTS	ECP	ASSEMBLY
S2310	/2.310	/2.310	/2.320		PERIMETER LIGHTS	OPT PERIM LTS	ASSEMBLY
S2510	/2.525	/2.510	/2.530	/2.515	SEAT CONTROLS	LHC	ASSEMBLY
S3180	/3.180				BRAKE PRESS SWITCH	REAR_FRAME	L425348
S5540	/5.540	/5.540	/5.550		WIRE BRUSH SHUNT	OPT WIRE BR SHUNT	ASSEMBLY
S5449	/5.449	/5.450	/5.460		LT LOWER WINDOW SWITCH	OPT LWR WIPERS	ASSEMBLY
S5494	/5.494	/5.495	/5.505		RT LOWER WINDOW SWITCH	OPT LWR WIPERS	ASSEMBLY
S6120	/6.120				HYD TOP OFF BUTTON	OPT HYD TOP-OFF	ASSEMBLY
SJ02A525	/J02A.576	/J02A.559	/J02A.526	/J02A.542	RIGHT WORKHEAD	RHC	ASSEMBLY
SJ02A600	/J02A.651	/J02A.634	/J02A.601	/J02A.617	RIGHT HOOK JOYSTICK	RHC	ASSEMBLY
SJ02A800	/J02A.800	/J02A.834	/J02A.817		WHD/TRACTION JYSK	RHC	ASSEMBLY
	/J02A.742	/J02A.775	/J02A.725	/J02A.759			ASSEMBLY
SJ02B134	/J02B.134				RT HND CLP SLW	RHC	0-3111006-0-25
SJ02B167	/J02B.167				R/H WIZARD	RHC	0-3111006-0-25
SJ02B334	/J02B.384	/J02B.367	/J02B.334	/J02B.351	LT WORKHEAD JOYSTICK	LHC	ASSEMBLY
SJ02B409	/J02B.459	/J02B.442	/J02B.409	/J02B.426	LT HOOK JOYSTICK	LHC	ASSEMBLY
SJ02B542	/J02B.542				LT HAND CLAMP SLEW	LHC	0-3111006-0-25
SJ02B575	/J02B.575				LT HAND WIZARD	LHC	0-3111006-0-25
SJ02B609	/J02B.609				HORN	LHC	ASSEMBLY
SJ02B675	/J02B.675				FLOOR CYCLE SWITCH	SEAT	C5363WAK
SJ05325	/J05.325				RR - LOW GEAR PROX	REAR TRANS	2000770
SJ05375	/J05.375				RR - NEUTRAL PROX	REAR TRANS	2000770
SJ05425	/J05.425				RR TRANS SPD SENSOR	REAR TRANS	2006509
SJ05475	/J05.475				RR - HIGH GEAR PROX	REAR TRANS	2000770
SJ06290	/J06.290	/J06.209			LT LINER PB	ECP	ASSEMBLY
SJ06324	/J06.324	/J06.234			LINER LIGHT PB	ECP	ASSEMBLY
SJ06357	/J06.357	/J06.259			RT LINER PB	ECP	ASSEMBLY
SJ06425	/J06.425				RR RT HORN PB	OPT RR HORN BTNS	ASSEMBLY
SJ06459	/J06.459				RR LT HORN PB	OPT RR HORN BTNS	ASSEMBLY
SJ09125	/J09.125				LT UPPER LIMIT SWITCH	WORKHEAD	H5963YAA
SJ09175	/J09.175				LT LOWER LIMIT SWITCH	WORKHEAD	H5963YAA
SJ09225	/J09.225				LT OUTER LIMIT SWITCH	WORKHEAD	H5963YAA
SJ09275	/J09.275				RT OUTER LIMIT SWITCH	WORKHEAD	H5963YAA
SJ09325	/J09.325				RT UPPER LIMIT SWITCH	WORKHEAD	H5963YAA
SJ09375	/J09.375				RT LOWER LIMIT SWITCH	WORKHEAD	H5963YAA
SJ14867	/J14.867	/J14.850			HYDRAULIC TEMP SNDR	HYD TANK	H5133WAT
SJ16150	/J16.150				MANUAL PUMP SWITCH	I/C	H6204YAA
SJ16525	/J16.525				FR - LOW GEAR PROX	FRONT TRANS	2000770
SJ16575	/J16.575				FR - NEUTRAL PROX	FRONT TRANS	2000770
SJ16625	/J16.625				FR TRANS SPD SENSOR	FRONT TRANS	2006509
SJ16675	/J16.675				FR - HIGH GEAR PROX	FRONT TRANS	2000770
SJ18167	/J18.167				DIRT ALARM FILTER P1	HYD TANK	172325-1
SJ18267	/J18.267				DIRT ALARM FILTER P2	HYD TANK	172325-1
SJ18367	/J18.367				DIRT ALARM FILTER P3	HYD TANK	172325-1
SJ18467	/J18.467				DIRT ALARM FILTER P4	HYD TANK	172325-1
SJ18567	/J18.567				DIRT ALARM FILTER P5	HYD TANK	172325-1
SJ18667	/J18.667				DIRT ALARM FILTER P6	HYD TANK	172325-1
SJ18767	/J18.767				DIRT ALARM FILTER P7	HYD TANK	172325-1

CONFIDENTIAL

©COPYRIGHT 2011 HARSCO. THIS DRAWING OR DOCUMENT IS THE PROPERTY OF HARSCO AND EMBODIES CONFIDENTIAL INFORMATION, TRADE SECRET INFORMATION, AND/OR KNOW-HOW THAT IS THE PROPERTY OF HARSCO. BY ACCEPTING THIS DRAWING OR DOCUMENT, THE RECIPIENT AGREES (1) NOT TO PROVIDE, OR OTHERWISE MAKE AVAILABLE, THE DRAWING OR DOCUMENT, OR ANY INFORMATION OR KNOW-HOW EMBODIED THEREIN, TO ANY THIRD PARTY AND (2) NOT TO REPRODUCE OR USE THE DRAWING OR DOCUMENT TO MANUFACTURE ANY APPARATUS OR DEVICE, WITHOUT THE PRIOR WRITTEN AUTHORIZATION OF HARSCO.

CHANGE #		REVISION	DR	DATE
EC503310	I	SEE EC FOR CHANGE DETAIL	CJW	04-05-12
EC501420	B	UPDATE AS BUILT	CJW	06/11
EC501724	C	MODIFIED PERIMETER LIGHT CIRCUIT FROM 1 CB TO 3	CJW	08/11
EC501821	D	UPDATE AS BUILT	CJW	08/11
EC502003	E	ADDED DRONE KIT, SHT 7, NEW CB SHT 4	CJW	09-22-11
EC502615	F	ADD ECM CONNECTOR, UPDATE SAT RADIO CABLE PN	CJW	01-05-12
EC502345	G	ADDED DRONE CAMERA KIT OPTION	DAS	01-09-12
EC502851	H	UPDATED JUPITER CABLES AS BUILT, SEE EC FOR CHANGE DETAIL	CJW	02-08-12

DRAWING TITLE/DESCRIPTION: ELECTRICAL SCHEMATIC Reference

MACHINE TYPE-MODEL: MARK IV

E3 PROJECT FILE NAME: MARK IV HD_10

SHEET NUMBER: X2

NUMBER OF JUPITER SHEETS: 19

TOTAL NUMBER OF SHEETS: 30

DRAWN BY: CJW

REL. DATE: 05/11

SIZE: D

SCALE:

HARSCO RAIL

E3 DRAWING

5007950

PRODUCT STRUCTURE

ITEM	PART #	QTY	PART DESCRIPTION	
10	164831	2	CABLE GRIP	: CABLE FROM: 0.500"-0.600" 3/4 NPT
20	174287	2	LIGHT, HEAD LIGHT	: 24V 60W TRAPEZOID BEAM
30	174288	4	LIGHT, HEAD LIGHT	: 24V 60W WIDE FLOOD BEAM
40	174532	1	ALARM	: 12V TO 36 VOLTS 107db
50	2013244	2	BATTERY	: 12VDC 8D BATTERY
60	3401698	50FT	WIRE SHIELD	: 8.9 MM ID, 13.6MM OD, HALOGEN FREE
70	3401699	50FT	WIRE SHIELD	: 12.9 MM ID, 18.7 MM OD, HALOGEN FREE
80	3401701	200FT	WIRE SHIELD	: 23.7 MM ID, 31.3 MM OD, HALOGEN FREE
90	3402420	100FT	WIRE	: 50MM (1/0AWG) BK, HALOGEN FREE, 1.8/3kV
100	3407028	5FT	WIRE	: 10AWG / RED, TYPE MTW
110	4014750	2	LIGHT, TAIL LIGHT	: BRAKE & TAIL LIGHT LED 24VDC
120	4014763	2	GROMMET	: 4 INCH FOR ROUND LIGHT
130	4014765	2	CONNECTOR	: 3-WIRE PIGTAIL DOUBLE CONTACT
140	4014766	2	BRACKET	: MOUNTING BRACKET FOR 4" ROUND LIGHT
150	4016767	24	DECAL	: TERMINAL BLOCK MARKER STRIP
160	4019171	40	TAGS, CABLE	: PLASTIC CABLE TAG SLEEVE
170				
180	4024977	1	CIRCUIT BREAKER	: 30 AMP BREAKER SURFACE MOUNT
190	4027738	1	FUSE HOLDER	: MAXI-FUSE HOLDER W/ CAP AND 5" LEADS
200	4029260	4	TERMINAL, CAP	: TERMINAL INSULATOR CAP
210				
220				
230	5007952	1	ENCLOSURE ASSEMBLY	: MARK IV PDB ASSEMBLY
240	0-1405820-0-01	6FT	MOLDING, TRIM	: TRIM MOLDING
250	0-3201001-0-14	1	GROMMET	: 3/8 I.D. HOLE 7/8 0.D. HOLE GROMMET
260	0-3211009-0-18	59FT	CABLE, SINGLE CONDUCTOR	: 2/0 AWG, BLACK 600V
270	0-3212004-0-47	23FT	CABLE, MULTICONDUCTOR	: 10AWG/5 CONDUCTOR .770 O.D 25A/CONDUCTOR
280				
290				
300				
310	0-3255008-0-02	2	TERMINAL, RING	: 5/16" RING, 10-12 AWG, INSULATED
320	A0055009	4	NUT	: 1/4-20 HEX NUT
330	A0061008	4	WASHER	: 1/4" LOCK WASHER
340	A2197Y09	2	LIGHT, SPOT LIGHT	: 24V MARINE SPOT LIGHT
350	A2898YAA	1	CABLE, ASSEMBLY	: 2/0 AWG, 24", TERMINAL LUG, BATTERY TERMINAL LUG
360	A2899YAA	1	CABLE, ASSEMBLY	: 2/0 AWG, 24", BATTERY TERMINAL LUGS
370	A2903YAA	1	CABLE, ASSEMBLY	: 2/0 AWG, 24", TERMINAL LUG, BATTERY TERMINAL LUG
380	A9297Y06	5FT	WIRE	: 10 AWG - WHITE WIRE TYPE-SXL
390	B1623Y03	3FT	CONDUIT, CORRUGATED	: 1/2" CORRUGATED CONDUIT
400	B1623Y04	19FT	CONDUIT, CORRUGATED	: 3/4" CORRUGATED CONDUIT
410	D6443Y03	4	CAP, TERMINAL	: BLACK, 1/2" I.D., 0.48" TERM WIDTH, 0.7" HIGH
420	D6443Y04	5	CAP, TERMINAL	: BLACK, 1/2" I.D., 0.48" TERM WIDTH, 0.7" HIGH
430	F001122	24	SCREW	: 5/16-18X1 1/2 HEX HEAD CAP SCREW GR5 ZP
440	F001213	4	SCREW	: 1/4-20X1 1/4 HEX HEAD CAP SCREW GR5 ZP
450	F001362	24	WASHER	: WROUGHT WASHER 5/16 ZP
460	F009038K	2	TERMINAL, RING	: 3/8" RING, 12-10AWG, INSULATED
470	F009729K	2	TERMINAL, RING	: 1/4" RING, 10-12 AWG, INSULATED
480	F009863	20	TERMINAL, BUTT	: BUTT CONNECTER, 16-14AWG
490	F012388	161FT	CABLE, MULTICONDUCTOR	: 16AWG/2 CONDUCTOR .405 O.D 13A/CONDUCTOR
500				
510	F015121K	3	TERMINAL, RING	: 5/16" RING, 6 AWG, INSULATED
520	F016578	100	TY-RAP	: LARGE 7 5/16"
530	F016656	50	TY-RAP	: EX-LARGE 13 3/8"
540	F018176	1	TERMINAL, RING	: #10 RING, 12-10 AWG, INSULATED
550	F018229	108	TY-RAP	: SMALL TY-RAP 3 1/2"
560	F020062K	2	TERMINAL, RING	: 1/2" RING, 12-10 AWG, INSULATED
570	F021028	101FT	CABLE, MULTICONDUCTOR	: 12AWG/8 CONDUCTOR .855 O.D 14A/CONDUCTOR
580	F021916	5FT	CABLE, MULTICONDUCTOR	: 10AWG/2 CONDUCTOR .63 O.D 30A/CONDUCTOR
590	F022332	10	TERMINAL, BUTT	: BUTT CONNECTER, 20-18AWG
600	F022727	3	TERMINAL, RING	: 3/8" RING, 2/0 AWG, NON-INSULATED
H 610	5011353	1	FUSE	: 10 AMP ATM, MINI AUTOMOTIVE BLADE
620				
630	F025527	1	SWITCH, DISCONNECT	: DUAL SWITCH
640	F040165	2	TERMINAL, RING	: 3/8" RING, 1/0 AWG, NON-INSULATED
650	H6204YAA	1	ASSEMBLY, BOX	: MANUAL PUMP BOX ASSEMBLY
660				
670	L411078	18FT	CABLE, SINGLE CONDUCTOR	: 1/0 AWG, BLACK 600V
680	L420607	1	CABLE GRIP	: CABLE FROM: 0.455 - 0.555" 1/2" NPT 90°
690				
700	L422508	6	TERMINAL, RING	: 3/8" RING, 2/0 AWG, NON-INSULATED

PRODUCT STRUCTURE

ITEM	PART #	QTY	PART DESCRIPTION	
710				
720	L424722	10	TERMINAL, RING	: 2/0 AWG, NON-INSULATED
730				
740	5008080	65FT	CABLE, MULTICONDUCTOR	: 10AWG/7 CONDUCTOR .900 O.D 20A/CONDUCTOR
750	5008393	1	ENCLOSURE ASSEMBLY	: 6 X 6 X 4 HINGED BOX WITH 12 TERMINALS
760	0-3261001-0-05	1	CABLE GRIP	: CABLE FROM: 0.800 - 0.900" 1" NPT 90°
770	F013278	8	CABLE GRIP	: CABLE FROM: .312-.375 1/2"NPT
780	F016189	17FT	CABLE, MULTICONDUCTOR	: 16AWG/4 CONDUCTOR .39 O.D 10A/CONDUCTOR
790	F019878	8	LOCK NUT	: 1/2" NUT
800	F020284	1	LOCK NUT	: FOR 1" CABLE GRIP
810	5007956	1	WIRING ASSEMBLY	: MARK IV JUPITER INSTALLATION
820	3401344	1	CABLE ASSEMBLY, M12	: USE 4022356 5 M W/M12 MALE + DIN-A STYLE W/TRANSZORB
830	4022568	9FT	CABLE, SINGLE CONDUCTOR	: 6 AWG BRAIDED GROUND CABLE, 1/2" X 1/16" X 25'
840	A1278Y18	4	CABLE GRIP	: CABLE FROM: 0.600-0.700" 1" NPT 90°
850	185639	2	CONNECTOR, MALE	: 4-PIN RECEPTACLE W/18 IN LEADS MALE, 1/2-14 NPSM THREADS
860	156647-1	2	TERMINAL, RING	: 1/4" RING, 12-10 AWG, INSULATED
870	156647-4	2	TERMINAL, RING	: 5/16" RING, 12-10 AWG, INSULATED
880	3413136	20FT	WIRE	: 12AWG / GREEN, TYPE MTW
890	3413146	40FT	WIRE	: 12AWG / RED, TYPE MTW
900	A1333Y54	1	CONNECTOR, FEMALE	: 4 PIN FEMALE CONNECTOR, DTP06-4S
910	A1333Y55	4	TERMINAL	: FEMALE SOCKET, DEUTSCH, SIZE 12
920	A1333Y56	1	WEDGE	: CONNECTOR WEDGELOCK, 4 WAY PLUG
930	B1623Y02	20FT	CONDUIT, CORRUGATED	: 7/16" CORRUGATED CONDUIT

CONFIDENTIAL

©COPYRIGHT 2011 HARSCO. THIS DRAWING OR DOCUMENT IS THE PROPERTY OF HARSCO AND EMBODIES CONFIDENTIAL INFORMATION, TRADE SECRET INFORMATION, AND/OR KNOW-HOW THAT IS THE PROPERTY OF HARSCO. BY ACCEPTING THIS DRAWING OR DOCUMENT, THE RECIPIENT AGREES (1) NOT TO PROVIDE, OR OTHERWISE MAKE AVAILABLE, THE DRAWING OR DOCUMENT, OR ANY INFORMATION OR KNOW-HOW EMBODIED THEREIN, TO ANY THIRD PARTY AND (2) NOT TO REPRODUCE OR USE THE DRAWING OR DOCUMENT TO MANUFACTURE ANY APPARATUS OR DEVICE, WITHOUT THE PRIOR WRITTEN AUTHORIZATION OF HARSCO.

CHANGE #		REVISION	DR	DATE
EC501059	A	NEW RELEASE	CJW	05/11
EC501131	B	ADDED LIGHTS TO BUGGY, NEW FJB	CJW	05/11
EC501418	C	UPDATE AS BUILT	CJW	06/11
EC501821	D	UPDATE AS BUILT	CJW	08/11
EC502003	E	UPDATE SHT 12, 13, 14 FOR DRONE KIT, CORRECT C08 ON SHT 15	CJW	09-22-11
EC502615	F	ADD ITEMS 860-930, ENGINE ECM WIRING SHEET 15	CJW	01-05-12
EC502851	G	UPDATED CABLE CHARTS FOR LT3250 & LT3270 ON SHEET 14	CJW	02-08-12
EC503310	H	SEE EC FOR CHANGE DETAIL	CJW	04-09-12

DRAWING TITLE/DESCRIPTION:
INTERCONNECT WIRING
Bill Of Material

MACHINE TYPE-MODEL:
MARK IV

E3 PROJECT FILE NAME:
MARK IV HD_10

SHEET NUMBER: 1
NUMBER OF JUPITER SHEETS: -
TOTAL NUMBER OF SHEETS: 15

DRAWN BY: CJW
REL. DATE: 05/11
SIZE: D
SCALE:

HARSCO RAIL

E3 DRAWING
5007958

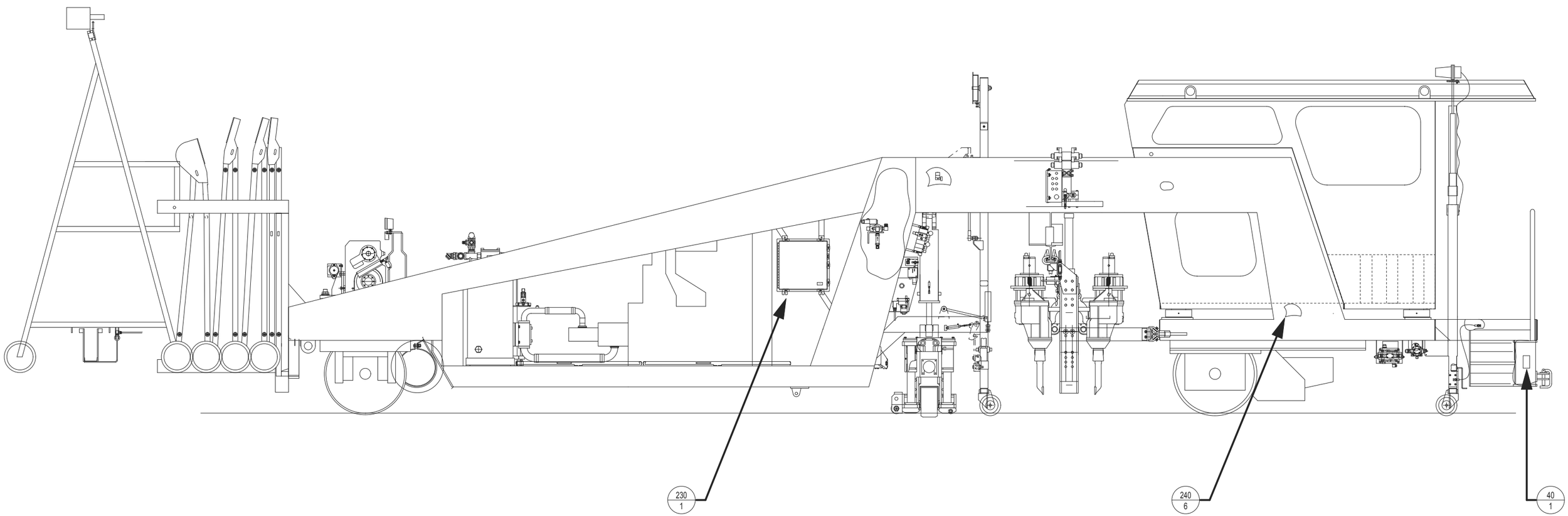

CONFIDENTIAL

©COPYRIGHT 2011 HARSCO. THIS DRAWING OR DOCUMENT IS THE PROPERTY OF HARSCO AND EMBODIES CONFIDENTIAL INFORMATION, TRADE SECRET INFORMATION, AND/OR KNOW-HOW THAT IS THE PROPERTY OF HARSCO. BY ACCEPTING THIS DRAWING OR DOCUMENT, THE RECIPIENT AGREES (1) NOT TO PROVIDE, OR OTHERWISE MAKE AVAILABLE, THE DRAWING OR DOCUMENT, OR ANY INFORMATION OR KNOW-HOW EMBODIED THEREIN, TO ANY THIRD PARTY AND (2) NOT TO REPRODUCE OR USE THE DRAWING OR DOCUMENT TO MANUFACTURE ANY APPARATUS OR DEVICE, WITHOUT THE PRIOR WRITTEN AUTHORIZATION OF HARSCO.

CHANGE #		REVISION	DR	DATE
EC501059	A	NEW RELEASE	CJW	05/11
EC501131	B	ADDED LIGHTS TO BUGGY, NEW FJB	CJW	05/11
EC501418	C	UPDATE AS BUILT	CJW	06/11
EC501821	D	UPDATE AS BUILT	CJW	08/11
EC502003	E	UPDATE SHT 12, 13, 14 FOR DRONE KIT, CORRECT C08 ON SHT 15	CJW	09-22-11
EC502615	F	ADD ITEMS 860-930, ENGINE ECM WIRING SHEET 15	CJW	01-05-12
EC502851	G	UPDATED CABLE CHARTS FOR LT3250 & LT3270 ON SHEET 14	CJW	02-08-12
EC503310	H	SEE EC FOR CHANGE DETAIL	CJW	04-09-12

DRAWING TITLE/DESCRIPTION:
INTERCONNECT WIRING
Device Layout

MACHINE TYPE-MODEL:
MARK IV

E3 PROJECT FILE NAME:
MARK IV HD_10

SHEET NUMBER: 2

NUMBER OF JUPITER SHEETS: -

TOTAL NUMBER OF SHEETS: 15

DRAWN BY: CJW

REL. DATE: 05/11

SIZE: D

SCALE:

HARSCO RAIL

E3 DRAWING

5007958

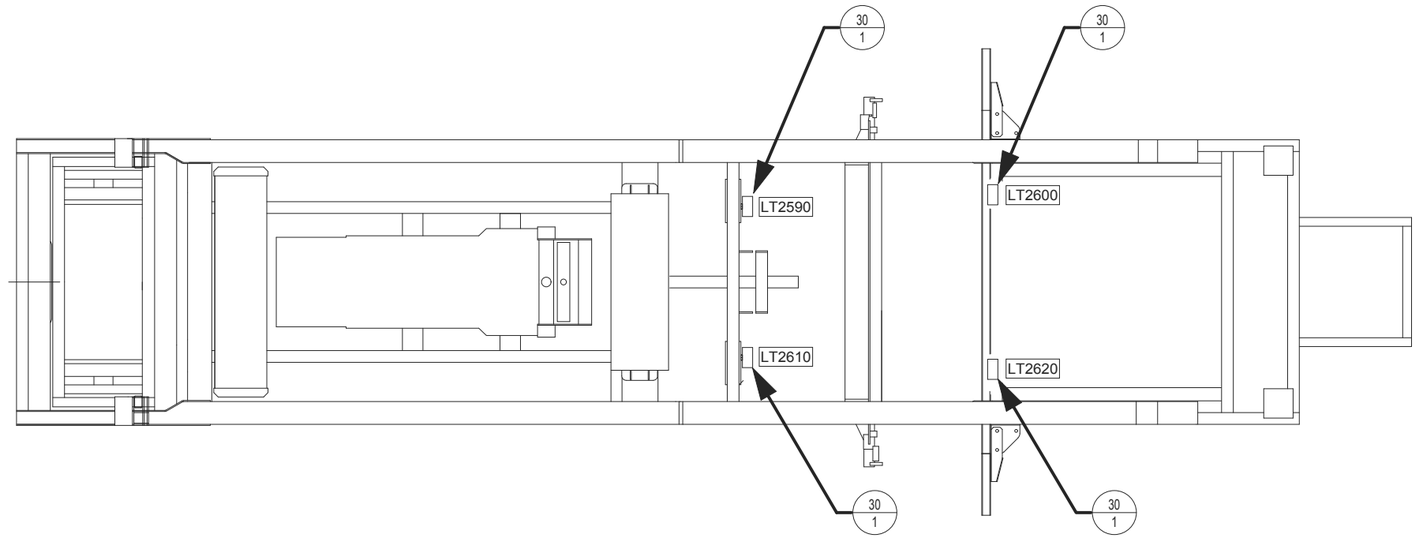

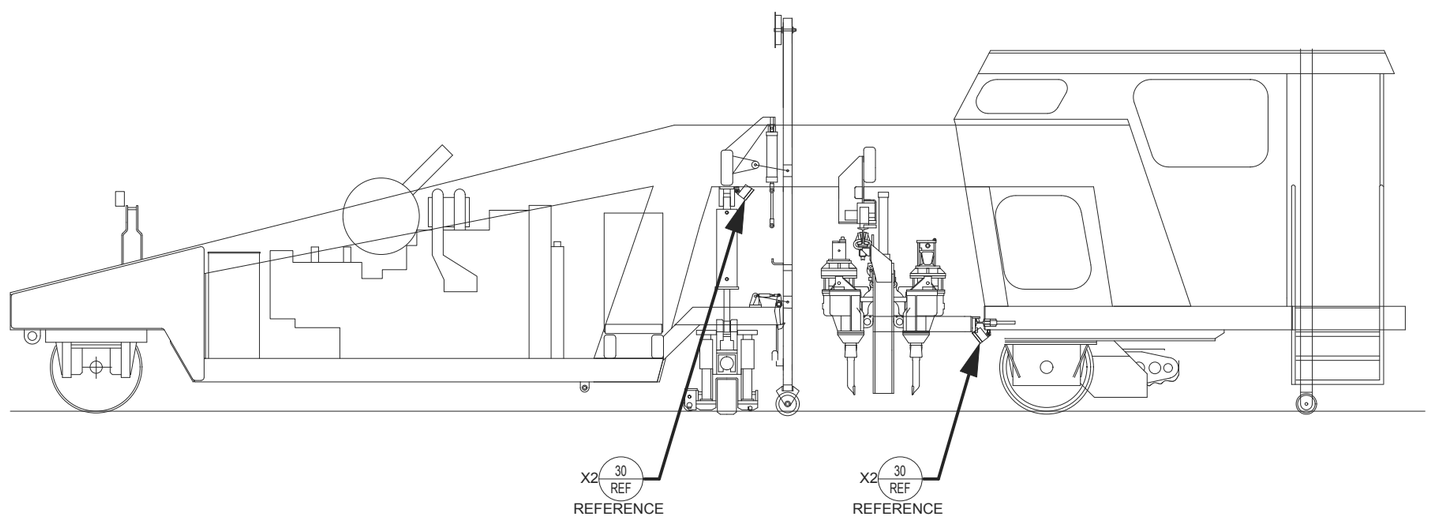

CONFIDENTIAL

©COPYRIGHT 2011 HARSCO. THIS DRAWING OR DOCUMENT IS THE PROPERTY OF HARSCO AND EMBODIES CONFIDENTIAL INFORMATION, TRADE SECRET INFORMATION, AND/OR KNOW-HOW THAT IS THE PROPERTY OF HARSCO. BY ACCEPTING THIS DRAWING OR DOCUMENT, THE RECIPIENT AGREES (1) NOT TO PROVIDE, OR OTHERWISE MAKE AVAILABLE, THE DRAWING OR DOCUMENT, OR ANY INFORMATION OR KNOW-HOW EMBODIED THEREIN, TO ANY THIRD PARTY AND (2) NOT TO REPRODUCE OR USE THE DRAWING OR DOCUMENT TO MANUFACTURE ANY APPARATUS OR DEVICE, WITHOUT THE PRIOR WRITTEN AUTHORIZATION OF HARSCO.

CHANGE #		REVISION	DR	DATE
EC501059	A	NEW RELEASE	CJW	05/11
EC501131	B	ADDED LIGHTS TO BUGGY, NEW FJB	CJW	05/11
EC501418	C	UPDATE AS BUILT	CJW	06/11
EC501821	D	UPDATE AS BUILT	CJW	08/11
EC502003	E	UPDATE SHT 12, 13, 14 FOR DRONE KIT, CORRECT C08 ON SHT 15	CJW	09-22-11
EC502615	F	ADD ITEMS 860-930, ENGINE ECM WIRING SHEET 15	CJW	01-05-12
EC502851	G	UPDATED CABLE CHARTS FOR LT3250 & LT3270 ON SHEET 14	CJW	02-08-12
EC503310	H	SEE EC FOR CHANGE DETAIL	CJW	04-09-12

DRAWING TITLE/DESCRIPTION:
INTERCONNECT WIRING
Work, Travel and Brake Lights Layout

MACHINE TYPE-MODEL:
MARK IV

E3 PROJECT FILE NAME:
MARK IV HD_10

SHEET NUMBER: 3
NUMBER OF JUPITER SHEETS: -
TOTAL NUMBER OF SHEETS: 15

DRAWN BY: CJW
REL. DATE: 05/11
SIZE: D
SCALE:

HARSCO RAIL

E3 DRAWING
5007958

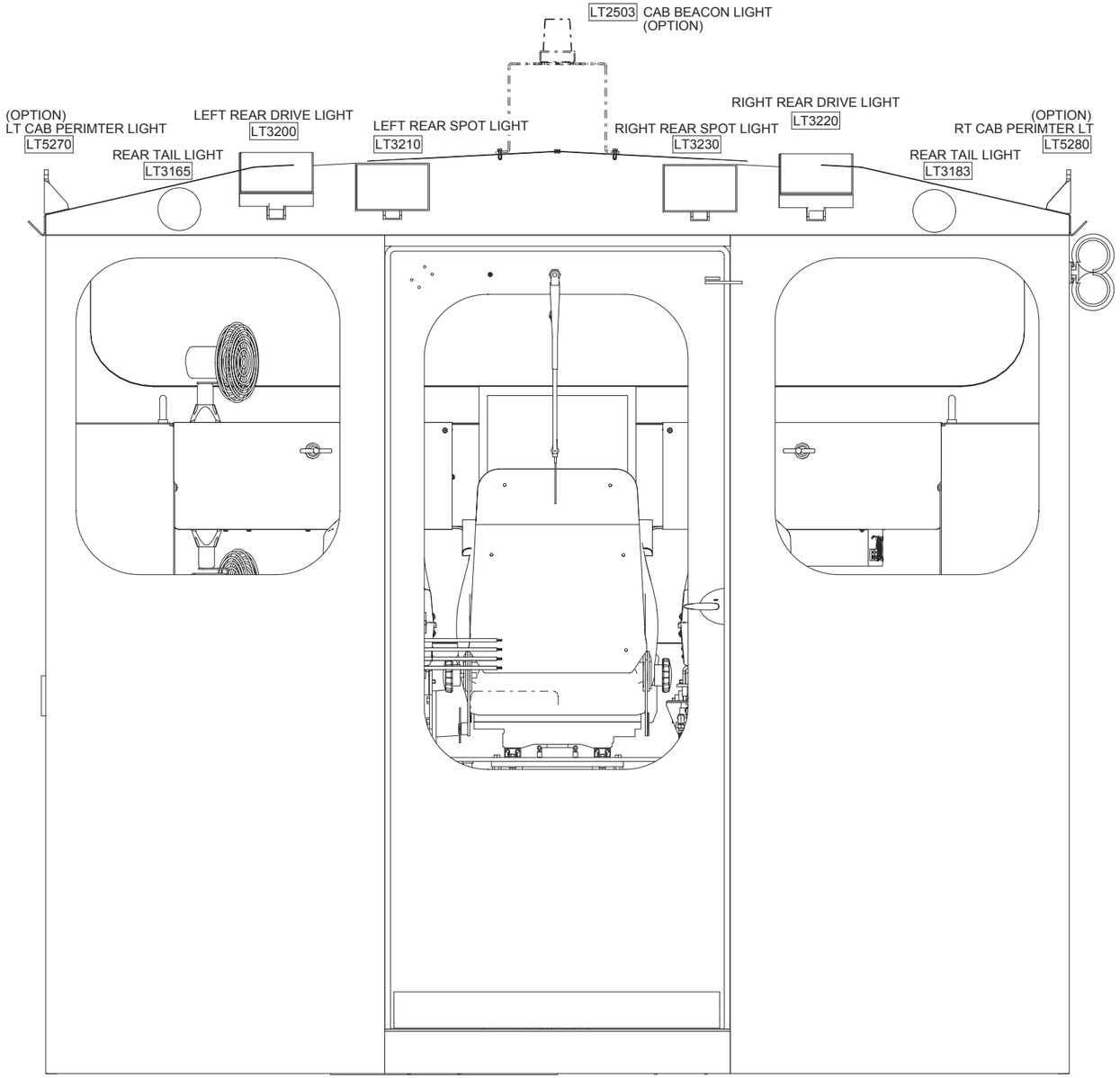

REAR OUTSIDE VIEW OF CAB

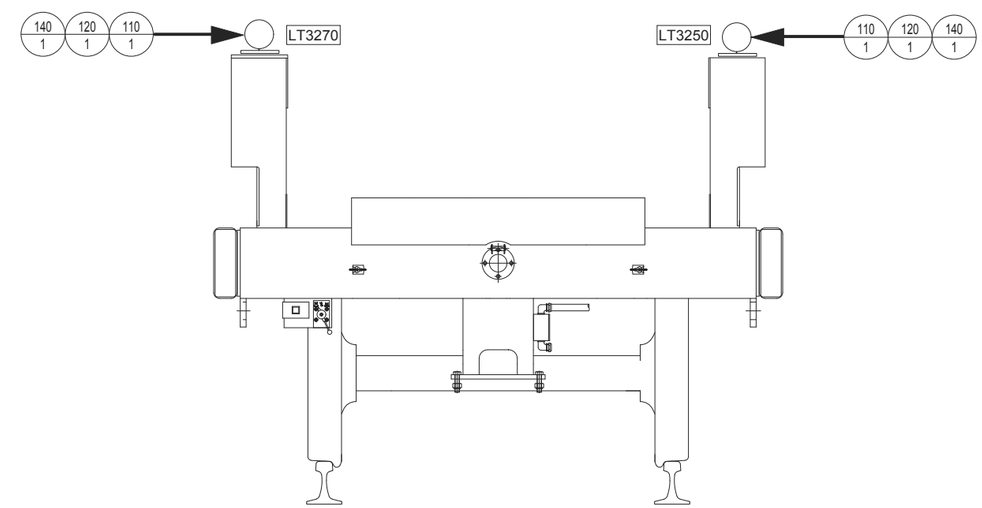

DETAIL "B"

FRONT VIEW OF MACHINE

CONFIDENTIAL

©COPYRIGHT 2011 HARSCO. THIS DRAWING OR DOCUMENT IS THE PROPERTY OF HARSCO AND EMBODIES CONFIDENTIAL INFORMATION, TRADE SECRET INFORMATION, AND/OR KNOW-HOW THAT IS THE PROPERTY OF HARSCO. BY ACCEPTING THIS DRAWING OR DOCUMENT, THE RECIPIENT AGREES (1) NOT TO PROVIDE, OR OTHERWISE MAKE AVAILABLE, THE DRAWING OR DOCUMENT, OR ANY INFORMATION OR KNOW-HOW EMBODIED THEREIN, TO ANY THIRD PARTY AND (2) NOT TO REPRODUCE OR USE THE DRAWING OR DOCUMENT TO MANUFACTURE ANY APPARATUS OR DEVICE, WITHOUT THE PRIOR WRITTEN AUTHORIZATION OF HARSCO.

CHANGE #		REVISION	DR	DATE
EC501059	A	NEW RELEASE	CJW	05/11
EC501131	B	ADDED LIGHTS TO BUGGY, NEW FJB	CJW	05/11
EC501418	C	UPDATE AS BUILT	CJW	06/11
EC501821	D	UPDATE AS BUILT	CJW	08/11
EC502003	E	UPDATE SHT 12, 13, 14 FOR DRONE KIT, CORRECT C08 ON SHT 15	CJW	09-22-11
EC502615	F	ADD ITEMS 860-930, ENGINE ECM WIRING SHEET 15	CJW	01-05-12
EC502851	G	UPDATED CABLE CHARTS FOR LT3250 & LT3270 ON SHEET 14	CJW	02-08-12
EC503310	H	SEE EC FOR CHANGE DETAIL	CJW	04-09-12

DRAWING TITLE/DESCRIPTION:
INTERCONNECT WIRING
Work, Travel and Brake Lights Layout

MACHINE TYPE-MODEL:
MARK IV

E3 PROJECT FILE NAME:
MARK IV HD_10

SHEET NUMBER: 4
NUMBER OF JUPITER SHEETS: -
TOTAL NUMBER OF SHEETS: 15

DRAWN BY: CJW
REL. DATE: 05/11
SIZE: D
SCALE:

HARSCO RAIL

E3 DRAWING
5007958

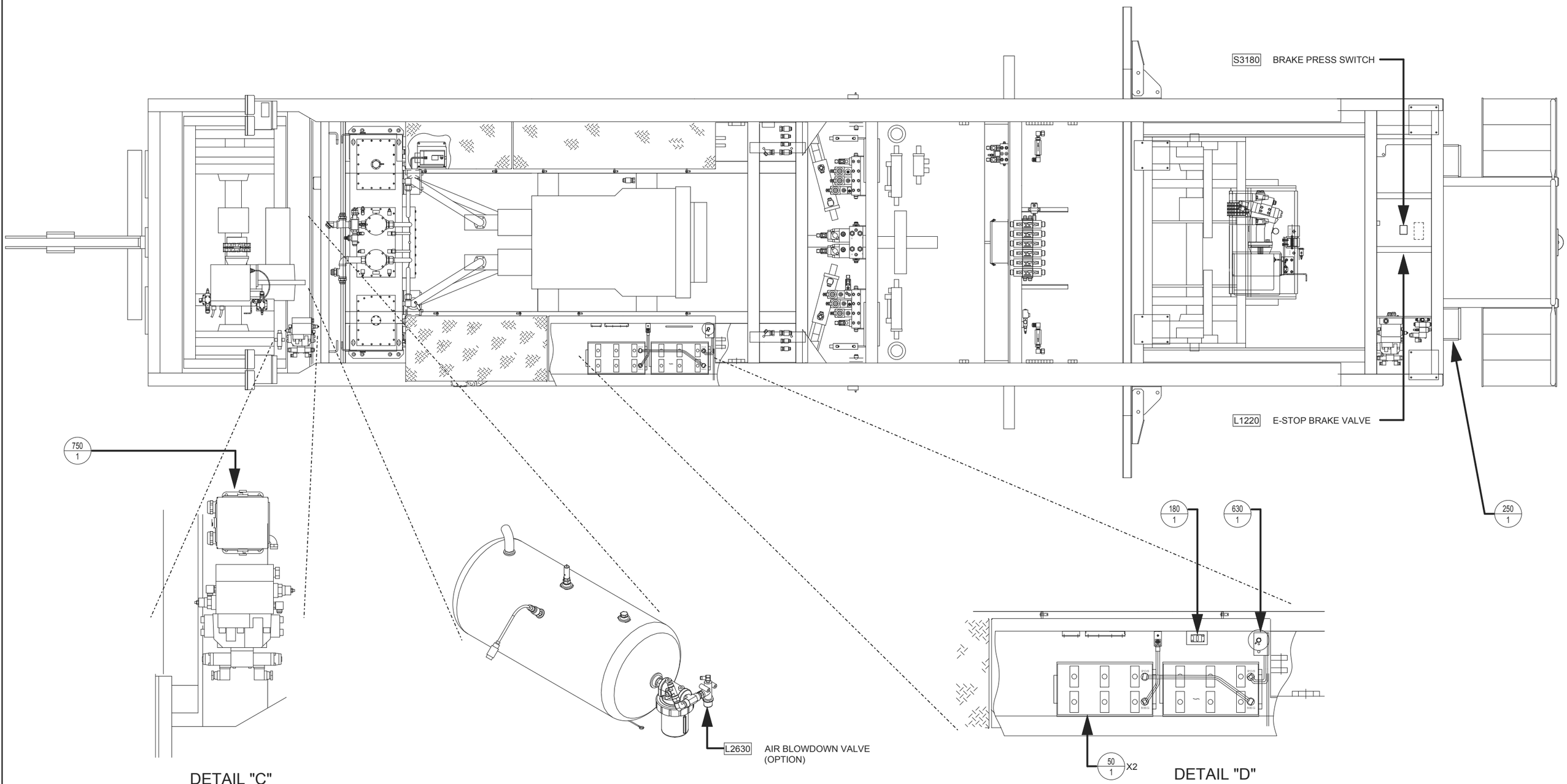

CONFIDENTIAL

©COPYRIGHT 2011 HARSCO. THIS DRAWING OR DOCUMENT IS THE PROPERTY OF HARSCO AND EMBODIES CONFIDENTIAL INFORMATION, TRADE SECRET INFORMATION, AND/OR KNOW-HOW THAT IS THE PROPERTY OF HARSCO. BY ACCEPTING THIS DRAWING OR DOCUMENT, THE RECIPIENT AGREES (1) NOT TO PROVIDE, OR OTHERWISE MAKE AVAILABLE, THE DRAWING OR DOCUMENT, OR ANY INFORMATION OR KNOW-HOW EMBODIED THEREIN, TO ANY THIRD PARTY AND (2) NOT TO REPRODUCE OR USE THE DRAWING OR DOCUMENT TO MANUFACTURE ANY APPARATUS OR DEVICE, WITHOUT THE PRIOR WRITTEN AUTHORIZATION OF HARSCO.

CHANGE #		REVISION	DR	DATE
EC501059	A	NEW RELEASE	CJW	05/11
EC501131	B	ADDED LIGHTS TO BUGGY, NEW FJB	CJW	05/11
EC501418	C	UPDATE AS BUILT	CJW	06/11
EC501821	D	UPDATE AS BUILT	CJW	08/11
EC502003	E	UPDATE SHT 12, 13, 14 FOR DRONE KIT, CORRECT C08 ON SHT 15	CJW	09-22-11
EC502615	F	ADD ITEMS 860-930, ENGINE ECM WIRING SHEET 15	CJW	01-05-12
EC502851	G	UPDATED CABLE CHARTS FOR LT3250 & LT3270 ON SHEET 14	CJW	02-08-12
EC503310	H	SEE EC FOR CHANGE DETAIL	CJW	04-09-12

DRAWING TITLE/DESCRIPTION:
INTERCONNECT WIRING
Device Layout

MACHINE TYPE-MODEL:
MARK IV

E3 PROJECT FILE NAME:
MARK IV HD_10

SHEET NUMBER: 5
NUMBER OF JUPITER SHEETS: -
TOTAL NUMBER OF SHEETS: 15

DRAWN BY: CJW
REL. DATE: 05/11
SIZE: D
SCALE:

HARSCO RAIL

E3 DRAWING
5007958

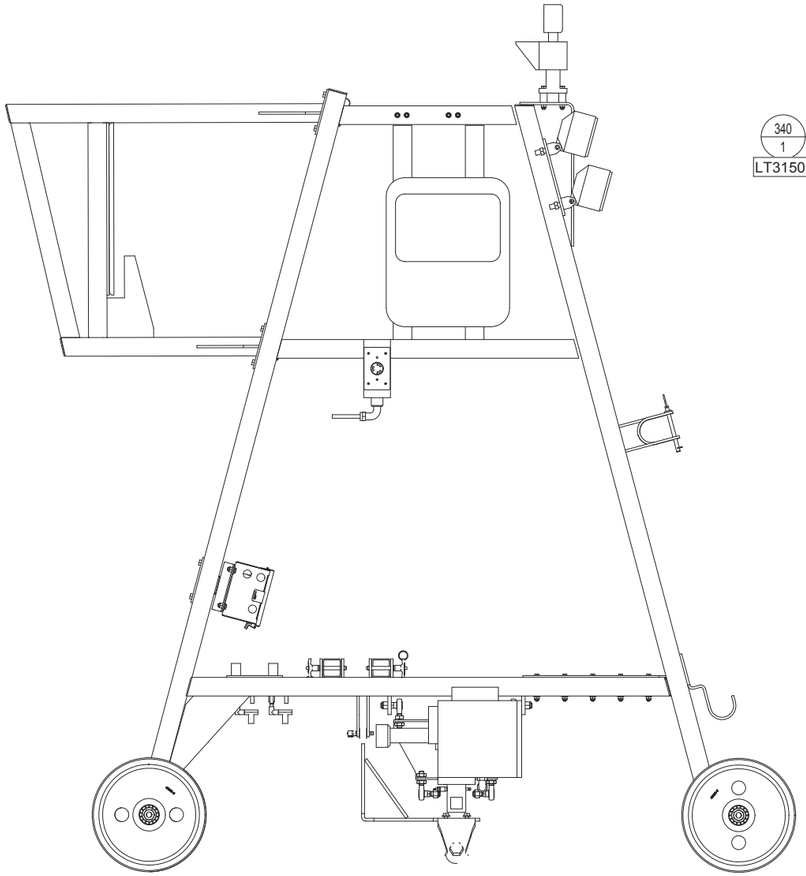

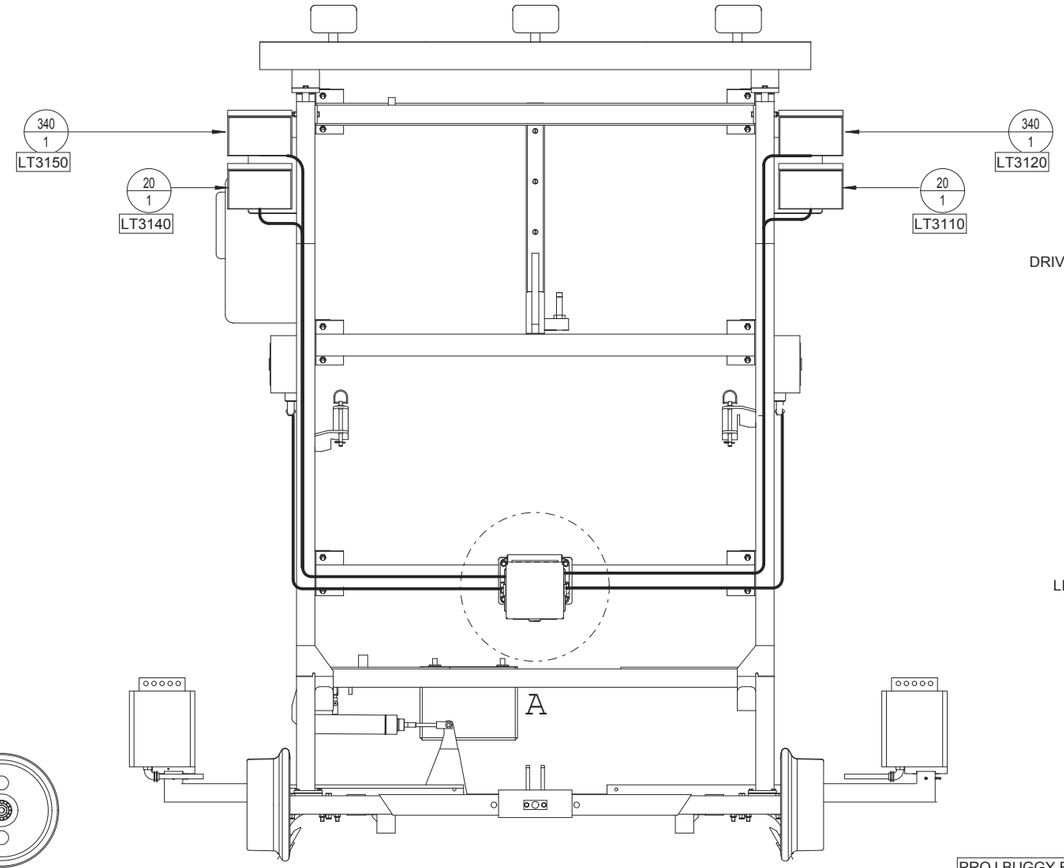

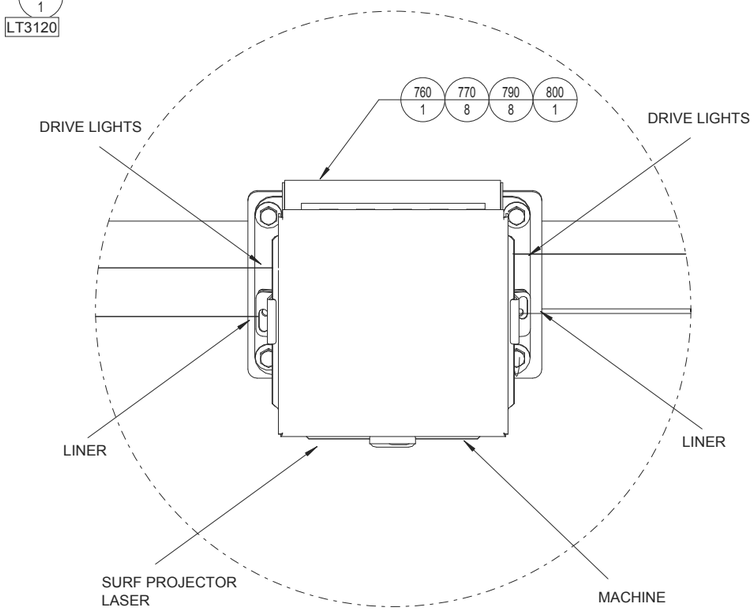

DETAIL A

***NEW CABLES FOR THE PROJECTOR BUGGY**

PROJ BUGGY FRAME GND FRAME				BUG_GND 4022568		9FT FRAME	830 / 9
RUN	COLOR	WIRE #	FROM	TERM NO.	TO	TERM NO.	
1	BK	000	FRT_FRM:GND	-	BUG_FRM:GND	-	

LEFT LINER POWER PROJ_BUGGY				LT_LINER F012388		8FT BUGGY	550 / 2	160 / 2	490 / 8
RUN	COLOR	WIRE #	FROM	TERM NO.	TO	TERM NO.			
1	BK	000W	TB7:6	-	LT_LINER:-	-			
2	WH	4222	TB7:1	-	LT_LINER:+	-			

RIGHT LINER POWER PROJ_BUGGY				RT_LINER F012388		8FT BUGGY	550 / 2	160 / 2	490 / 8
RUN	COLOR	WIRE #	FROM	TERM NO.	TO	TERM NO.			
1	BK	000W	TB7:6	-	RT_LINER:-	-			
2	WH	4232	TB7:2	-	RT_LINER:+	-			

SURF PROJECTOR POWER PROJ_BUGGY				SURF_PROJ F012388		15FT BUGGY	550 / 2	160 / 2	490 / 15
RUN	COLOR	WIRE #	FROM	TERM NO.	TO	TERM NO.			
1	BK	000W	TB7:6	-	SURF_PROJ:-	-			
2	WH	4262	TB7:4	-	SURF_PROJ:+	-			

LASER POWER PROJ_BUGGY				LASER F012388		10FT BUGGY	550 / 2	160 / 2	490 / 10
RUN	COLOR	WIRE #	FROM	TERM NO.	TO	TERM NO.			
1	BK	000W	TB7:6	-	LASER:-	-			
2	WH	4232	TB7:3	-	LASER:+	-			

CABLE FROM MCB IN CAB TO FRONT OF MACHINE

MCB TO FJBOX CABLE MCB				MCB_FJBOX 5008080		65FT FRONT JBOX	550 / 2	160 / 2	740 / 65
RUN	COLOR	WIRE #	FROM	TERM NO.	TO	TERM NO.			
1	BK	4222	TB2:16	-	TB20:4	-			
2	WH	4232	TB2:17	-	TB20:5	-			
3	RD	4242	TB2:18	-	TB20:6	-			
4	GN	4262	TB2:19	-	TB20:7	-			
5	OR	000W	TB4:10	-	TB20:8	-			
6	BU	3112	TB1:25	-	TB20:9	-			
7	WH/BK	000	TB3:8	-	TB20:10	-			

CABLE FROM FRONT FRAME THROUGH BUGGY EXTENTION FRAME

PROJ BUGGY CABLE FRONT JBOX				PROJ_BUGGY F021028		101FT PROJ_BUGGY	550 / 2	160 / 2	570 / 101
RUN	COLOR	WIRE #	FROM	TERM NO.	TO	TERM NO.			
1	BK	4222	TB20:4	-	TB7:1	-			
2	WH	4232	TB20:5	-	TB7:2	-			
3	RD	4242	TB20:6	-	TB7:3	-			
4	GN	4262	TB20:7	-	TB7:4	-			
5	OR	000W	TB20:8	-	TB7:5	-			
6	BU	3112	TB20:9	-	TB7:7	-			
7	WH/BK	000	TB20:10	-	TB7:9	-			
8	RD/BK	**NC**	-	-	-	-			

LEFT FRONT DRIVE LT PROJ_BUGGY				LT3110 F012388		10FT I/C	550 / 2	160 / 2	490 / 10
RUN	COLOR	WIRE #	FROM	TERM NO.	TO	TERM NO.			
1	BK	000	TB7:9	-	LT3110:-	-			
2	WH	3112	TB7:7	-	LT3110:+	-			

LEFT FRONT SPOT LT PROJ_BUGGY				LT3120 F012388		10FT I/C	550 / 2	160 / 2	490 / 10
RUN	COLOR	WIRE #	FROM	TERM NO.	TO	TERM NO.			
1	BK	000	TB7:9	-	LT3120:-	-			
2	WH	3112	TB7:7	-	LT3120:+	-			

RIGHT FRONT DRIVE LT PROJ_BUGGY				LT3140 F012388		10FT I/C	550 / 2	160 / 2	490 / 10
RUN	COLOR	WIRE #	FROM	TERM NO.	TO	TERM NO.			
1	BK	000	TB7:10	-	LT3140:-	-			
2	WH	3112	TB7:8	-	LT3140:+	-			

RIGHT FRONT SPOT LT PROJ_BUGGY				LT3150 F012388		10FT I/C	550 / 2	160 / 2	490 / 10
RUN	COLOR	WIRE #	FROM	TERM NO.	TO	TERM NO.			
1	BK	000	TB7:10	-	LT3150:-	-			
2	WH	3112	TB7:8	-	LT3150:+	-			

CONFIDENTIAL

©COPYRIGHT 2011 HARSCO. THIS DRAWING OR DOCUMENT IS THE PROPERTY OF HARSCO AND EMBODIES CONFIDENTIAL INFORMATION, TRADE SECRET INFORMATION, AND/OR KNOW-HOW THAT IS THE PROPERTY OF HARSCO. BY ACCEPTING THIS DRAWING OR DOCUMENT, THE RECIPIENT AGREES (1) NOT TO PROVIDE, OR OTHERWISE MAKE AVAILABLE, THE DRAWING OR DOCUMENT, OR ANY INFORMATION OR KNOW-HOW EMBODIED THEREIN, TO ANY THIRD PARTY AND (2) NOT TO REPRODUCE OR USE THE DRAWING OR DOCUMENT TO MANUFACTURE ANY APPARATUS OR DEVICE, WITHOUT THE PRIOR WRITTEN AUTHORIZATION OF HARSCO.

CHANGE #		REVISION	DR	DATE
EC501059	A	NEW RELEASE	CJW	05/11
EC501131	B	ADDED LIGHTS TO BUGGY, NEW FJB	CJW	05/11
EC501418	C	UPDATE AS BUILT	CJW	06/11
EC501821	D	UPDATE AS BUILT	CJW	08/11
EC502003	E	UPDATE SHT 12, 13, 14 FOR DRONE KIT, CORRECT C08 ON SHT 15	CJW	09-22-11
EC502615	F	ADD ITEMS 860-930, ENGINE ECM WIRING SHEET 15	CJW	01-05-12
EC502851	G	UPDATED CABLE CHARTS FOR LT3250 & LT3270 ON SHEET 14	CJW	02-08-12
EC503310	H	SEE EC FOR CHANGE DETAIL	CJW	04-09-12

DRAWING TITLE/DESCRIPTION:
INTERCONNECT WIRING
Projector Buggy Wiring

MACHINE TYPE-MODEL:
MARK IV

E3 PROJECT FILE NAME:
MARK IV HD_10

SHEET NUMBER: 6
NUMBER OF JUPITER SHEETS: -
TOTAL NUMBER OF SHEETS: 15

DRAWN BY: CJW
REL. DATE: 05/11
SIZE: D
SCALE:

HARSCO RAIL

E3 DRAWING
5007958

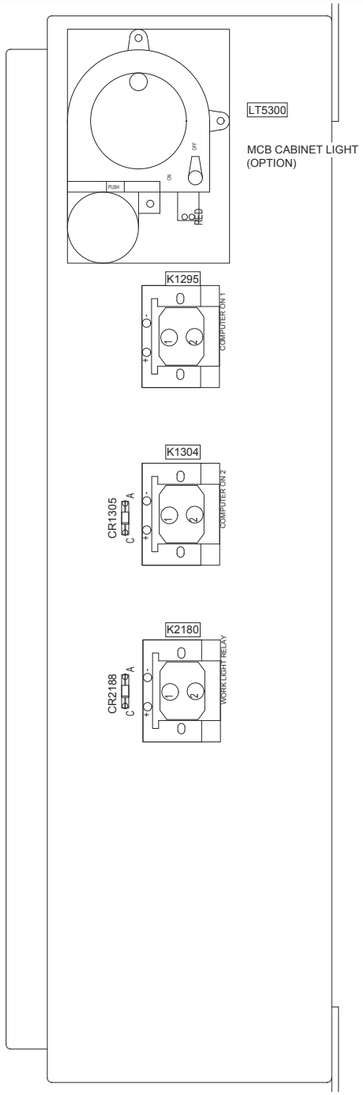

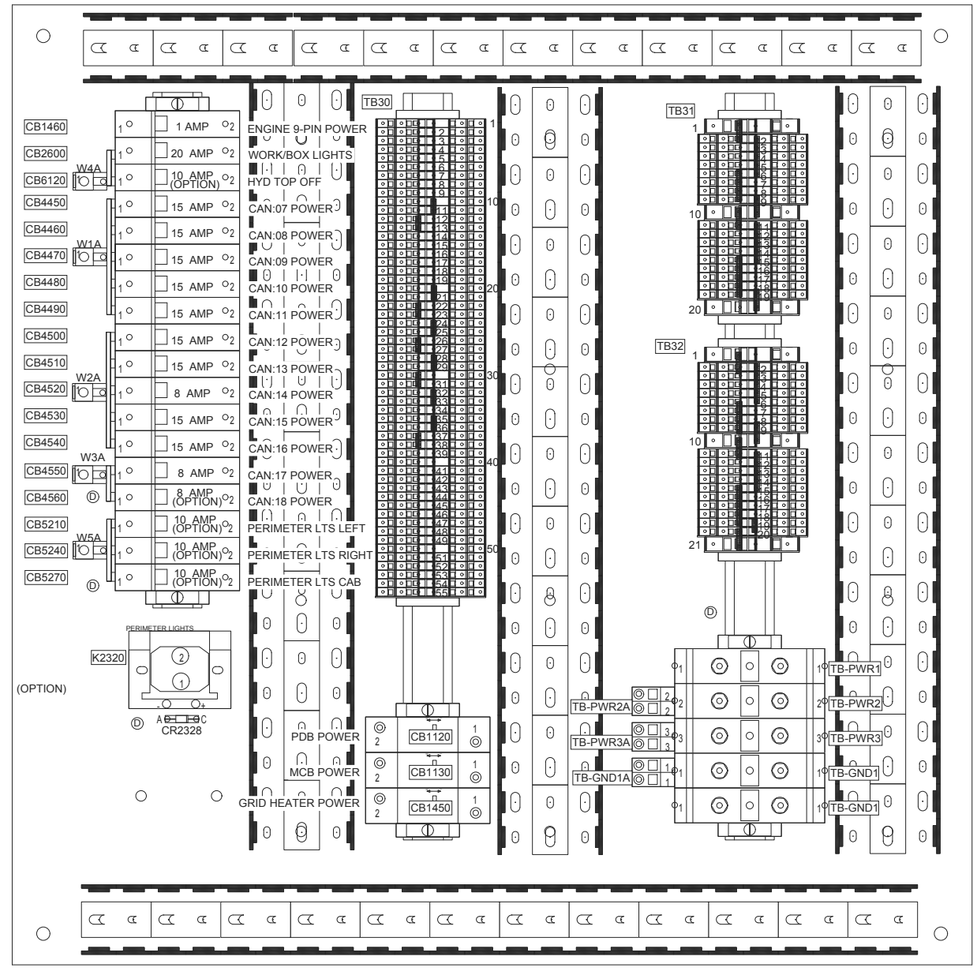

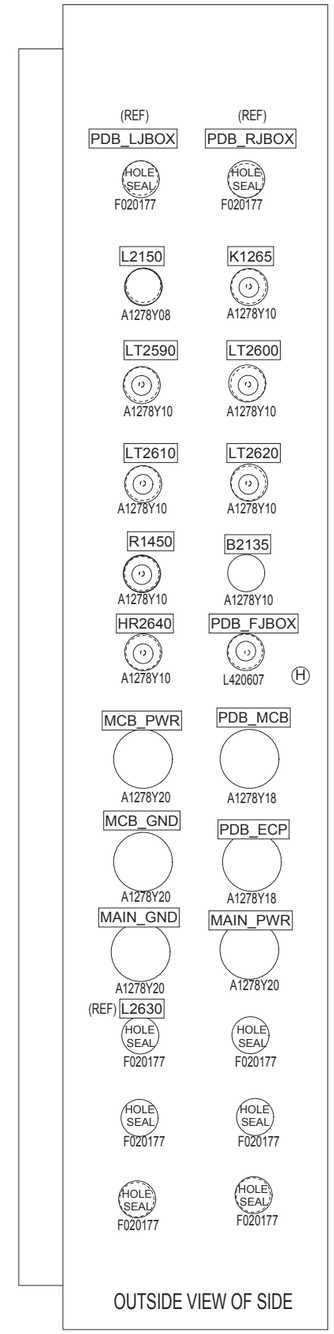

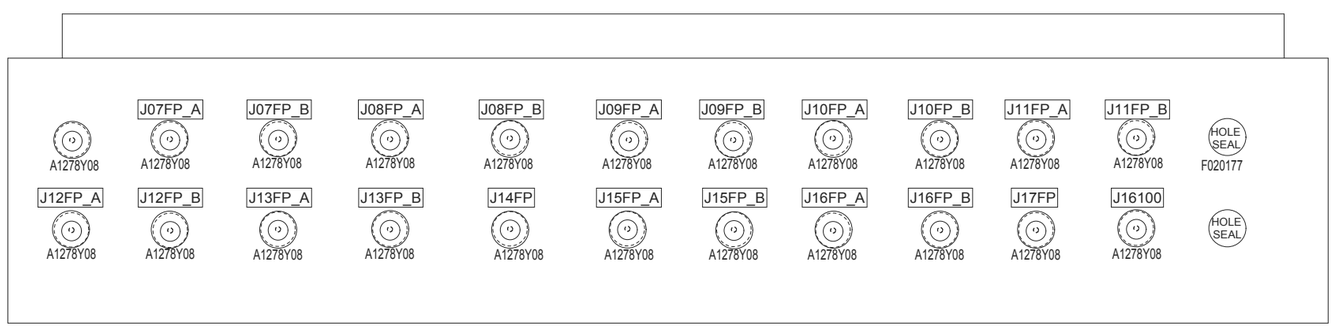

LEFT

BOTTOM

* = ROUTE CABLE WITH JACKET ON IN THE ENCLOSURE.
SOME CABLE GRIPS WILL NOT HAVE CABLES IN THEM.

RIGHT

CONFIDENTIAL

©COPYRIGHT 2011 HARSCO. THIS DRAWING OR DOCUMENT IS THE PROPERTY OF HARSCO AND EMBODIES CONFIDENTIAL INFORMATION, TRADE SECRET INFORMATION, AND/OR KNOW-HOW THAT IS THE PROPERTY OF HARSCO. BY ACCEPTING THIS DRAWING OR DOCUMENT, THE RECIPIENT AGREES (1) NOT TO PROVIDE, OR OTHERWISE MAKE AVAILABLE, THE DRAWING OR DOCUMENT, OR ANY INFORMATION OR KNOW-HOW EMBODIED THEREIN, TO ANY THIRD PARTY AND (2) NOT TO REPRODUCE OR USE THE DRAWING OR DOCUMENT TO MANUFACTURE ANY APPARATUS OR DEVICE, WITHOUT THE PRIOR WRITTEN AUTHORIZATION OF HARSCO.

CHANGE #		REVISION	DR	DATE
EC501059	A	NEW RELEASE	CJW	05/11
EC501131	B	ADDED LIGHTS TO BUGGY, NEW FJB	CJW	05/11
EC501418	C	UPDATE AS BUILT	CJW	06/11
EC501821	D	UPDATE AS BUILT	CJW	08/11
EC502003	E	UPDATE SHT 12, 13, 14 FOR DRONE KIT, CORRECT C08 ON SHT 15	CJW	09-22-11
EC502615	F	ADD ITEMS 860-930, ENGINE ECM WIRING SHEET 15	CJW	01-05-12
EC502851	G	UPDATED CABLE CHARTS FOR LT3250 & LT3270 ON SHEET 14	CJW	02-08-12
EC503310	H	SEE EC FOR CHANGE DETAIL	CJW	04-09-12

DRAWING TITLE/DESCRIPTION:
INTERCONNECT WIRING
PDB Box Assembly

MACHINE TYPE-MODEL:
MARK IV

E3 PROJECT FILE NAME:
MARK IV HD_10

SHEET NUMBER: 7
NUMBER OF JUPITER SHEETS: -
TOTAL NUMBER OF SHEETS: 15

DRAWN BY: CJW
REL. DATE: 05/11
SIZE: D
SCALE:

HARSCO RAIL

E3 DRAWING
5007958

EXISTING CABLES FROM PDB

GRID HEATER POWER — R1450 — 25FT
PDB — 0-3212004-0-32 — ENGINE

RUN	COLOR	WIRE #	FROM	TERM NO.	TO	TERM NO.
1	BK	1450	CB1450:2	-	K1505:1	-

RUN CABLE IN SPLIT LOOM FOR PROTECTION

STARTER SLAVE RELAY 1 — K1265 — 25FT
PDB — F012388 — ENGINE

RUN	COLOR	WIRE #	FROM	TERM NO.	TO	TERM NO.
1	BK	000	TB31:2	-	K1265:-	-
2	WH	1268	TB30:4	-	K1265:+	-

RUN CABLE IN SPLIT LOOM FOR PROTECTION

WORK LIGHTS — LT2590 — 40FT
PDB — F012388 — I/C

RUN	COLOR	WIRE #	FROM	TERM NO.	TO	TERM NO.
1	BK	000	TB31:5	-	LT2590:-	-
2	WH	2605	TB30:12	-	LT2590:+	-

WORK LIGHTS — LT2600 — 45FT
PDB — F012388 — I/C

RUN	COLOR	WIRE #	FROM	TERM NO.	TO	TERM NO.
1	BK	000	TB31:5	-	LT2600:-	-
2	WH	2605	TB30:12	-	LT2600:+	-

WORK LIGHTS — LT2610 — 25FT
PDB — F012388 — I/C

RUN	COLOR	WIRE #	FROM	TERM NO.	TO	TERM NO.
1	BK	000	TB31:6	-	LT2610:-	-
2	WH	2605	TB30:13	-	LT2610:+	-

WORK LIGHTS — LT2620 — 25FT
PDB — F012388 — I/C

RUN	COLOR	WIRE #	FROM	TERM NO.	TO	TERM NO.
1	BK	000	TB31:6	-	LT2620:-	-
2	WH	2605	TB30:13	-	LT2620:+	-

AIR DRYER POWER — HR2640 — 20FT
PDB — F012388 — AIR DRYER

RUN	COLOR	WIRE #	FROM	TERM NO.	TO	TERM NO.
1	BK	000	TB31:7	-	HR2640:B	-
2	WH	2600	TB30:11	-	HR2640:A	-

EXISTING CABLES FROM PDB

PDB TO ECP CABLE — PDB_ECP — 25FT
PDB — F018249K — ECP

RUN	COLOR	WIRE #	FROM	TERM NO.	TO	TERM NO.
1	BK	000A	TB30:1	-	TB10:6	-
2	WH	000B	TB30:2	-	TB10:7	-
3	RD	000C	TB30:3	-	TB10:8	-
4	GN	2180	TB30:7	-	TB10:15	-
5	OR	2210	TB30:8	-	TB10:16	-
6	BU	2320	TB30:9	-	TB10:21	-
7	WH/BK	000	TB31:4	-	TB10:36	-
8	GN/BK	1295	TB30:5	-	TB10:10	-
9	OR/BK	1268	TB30:4	-	TB10:32	-
10	BU/BK	**NC**	-	-	-	-
11	RD/BK	**NC**	-	-	-	-
12	BK/WH	**NC**	-	-	-	-

PDB TO FRONT JB — PDB_FJBOX — 35FT
PDB — F016189 — FRONT JBOX

RUN	COLOR	WIRE #	FROM	TERM NO.	TO	TERM NO.
1	BK	3177	TB30:16	-	TB20:2	-
2	WH	3220	TB30:17	-	TB20:1	-
3	RD	000	TB31:9	-	TB20:3	-
4	GN	**NC**	-	-	-	-

PDB TO MCB CABLE — PDB_MCB — 40FT
PDB — F018249K — MCB

RUN	COLOR	WIRE #	FROM	TERM NO.	TO	TERM NO.
1	BK	**NC**	-	-	-	-
2	WH	5270	TB30:47	-	TB1:31	-
3	RD	1335	TB30:6	-	TB1:12	-
4	GN	3177	TB30:16	-	TB1:28	-
5	OR	3220	TB30:17	-	TB1:30	-
6	BU	**NC**	-	-	-	-
7	WH/BK	2135	TB30:39	-	TB1:14	-
8	GN/BK	**NC**	-	-	-	-
9	OR/BK	**NC**	-	-	-	-
10	BU/BK	**NC**	-	-	-	-
11	RD/BK	2145	TB30:19	-	TB1:15	-
12	BK/WH	**NC**	-	-	-	-

NEW CABLES TO PDB

PDB MAIN GND — MAIN_GND — 15FT
PDB — 3402420_CABLE — FRAME

RUN	COLOR	WIRE #	FROM	TERM NO.	TO	TERM NO.
1	BK	000	TB-GND1:1	-	GND_FRM:GND	-

550 / 2 — 160 / 2 — 90 / 15

RUN CABLE IN SPLIT LOOM FOR PROTECTION

PDB MAIN PWR — MAIN_PWR — 25FT
I/C — 3402420_CABLE — PDB

RUN	COLOR	WIRE #	FROM	TERM NO.	TO	TERM NO.
1	BK	1110	S1110:b2	-	TB-PWR1:1	-

550 / 2 — 160 / 2 — 90 / 25

RUN CABLE IN SPLIT LOOM FOR PROTECTION

MCB MAIN PWR — MCB_PWR — 30FT
PDB — 3402420_CABLE — MCB

RUN	COLOR	WIRE #	FROM	TERM NO.	TO	TERM NO.
1	BK	1140	CB1130:2	-	TB-PWR4:4	-

550 / 2 — 160 / 2 — 90 / 30

RUN CABLE IN SPLIT LOOM FOR PROTECTION

PDB TO MCB GROUND — MCB_GND — 30FT
MCB — 3402420_CABLE — PDB

RUN	COLOR	WIRE #	FROM	TERM NO.	TO	TERM NO.
1	BK	000	TB-GND2:2	-	TB-GND1:1	-

550 / 2 — 160 / 2 — 90 / 30

RUN CABLE IN SPLIT LOOM FOR PROTECTION

AIR BLOWDOWN — L2630 — CABLE ASSEMBLY, M12 (REF)
OPT AIR BLOWDOWN — 3401346 — PDB

RUN	COLOR	WIRE #	FROM	TERM NO.	TO	TERM NO.
1	W-1	2600	L2630:DIN	EXISTS	TB30:11	-
2	W-2	**NC**	L2630:DIN	EXISTS	-	-
3	W-3	000	L2630:DIN	EXISTS	TB31:7	-

HEATER WATER PUMP — B2135 — 15FT
PDB — F012388 — HTR WATER PUMP

RUN	COLOR	WIRE #	FROM	TERM NO.	TO	TERM NO.
1	BK	000	TB31:8	-	B2135:-	-
2	WH	2135	TB30:39	-	B2135:+	-

CONFIDENTIAL

©COPYRIGHT 2011 HARSCO. THIS DRAWING OR DOCUMENT IS THE PROPERTY OF HARSCO AND EMBODIES CONFIDENTIAL INFORMATION, TRADE SECRET INFORMATION, AND/OR KNOW-HOW THAT IS THE PROPERTY OF HARSCO. BY ACCEPTING THIS DRAWING OR DOCUMENT, THE RECIPIENT AGREES (1) NOT TO PROVIDE, OR OTHERWISE MAKE AVAILABLE, THE DRAWING OR DOCUMENT, OR ANY INFORMATION OR KNOW-HOW EMBODIED THEREIN, TO ANY THIRD PARTY AND (2) NOT TO REPRODUCE OR USE THE DRAWING OR DOCUMENT TO MANUFACTURE ANY APPARATUS OR DEVICE, WITHOUT THE PRIOR WRITTEN AUTHORIZATION OF HARSCO.

CHANGE #		REVISION	DR	DATE
EC501059	A	NEW RELEASE	CJW	05/11
EC501131	B	ADDED LIGHTS TO BUGGY, NEW FJB	CJW	05/11
EC501418	C	UPDATE AS BUILT	CJW	06/11
EC501821	D	UPDATE AS BUILT	CJW	08/11
EC502003	E	UPDATE SHT 12, 13, 14 FOR DRONE KIT, CORRECT C08 ON SHT 15	CJW	09-22-11
EC502615	F	ADD ITEMS 860-930, ENGINE ECM WIRING SHEET 15	CJW	01-05-12
EC502851	G	UPDATED CABLE CHARTS FOR LT3250 & LT3270 ON SHEET 14	CJW	02-08-12
EC503310	H	SEE EC FOR CHANGE DETAIL	CJW	04-09-12

DRAWING TITLE/DESCRIPTION:
INTERCONNECT WIRING
PDB Cable Charts

MACHINE TYPE-MODEL:
MARK IV

E3 PROJECT FILE NAME:
MARK IV HD_10

SHEET NUMBER: 8
NUMBER OF JUPITER SHEETS: -
TOTAL NUMBER OF SHEETS: 15

DRAWN BY: CJW
REL. DATE: 05/11
SIZE: D
SCALE:

HARSCO RAIL

E3 DRAWING

5007958

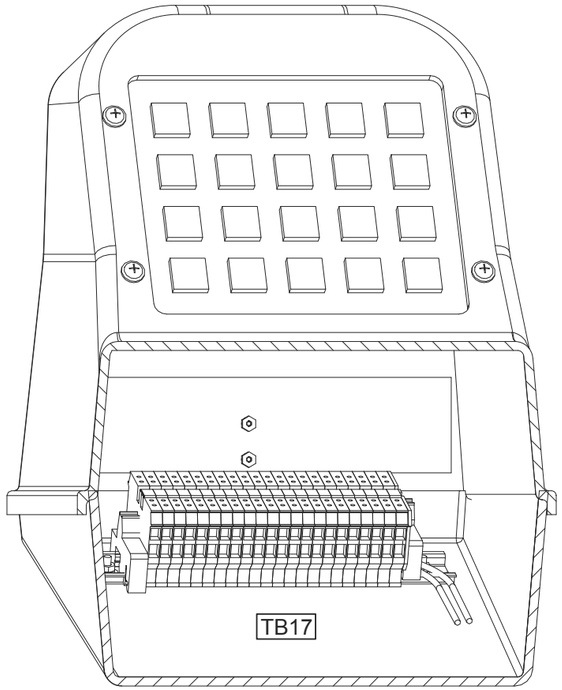

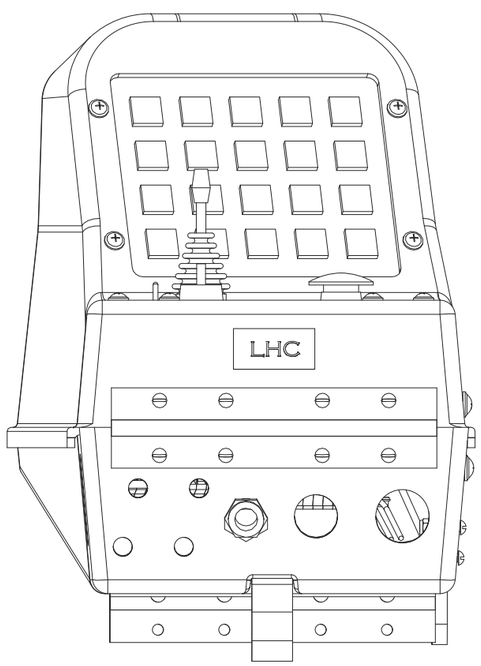

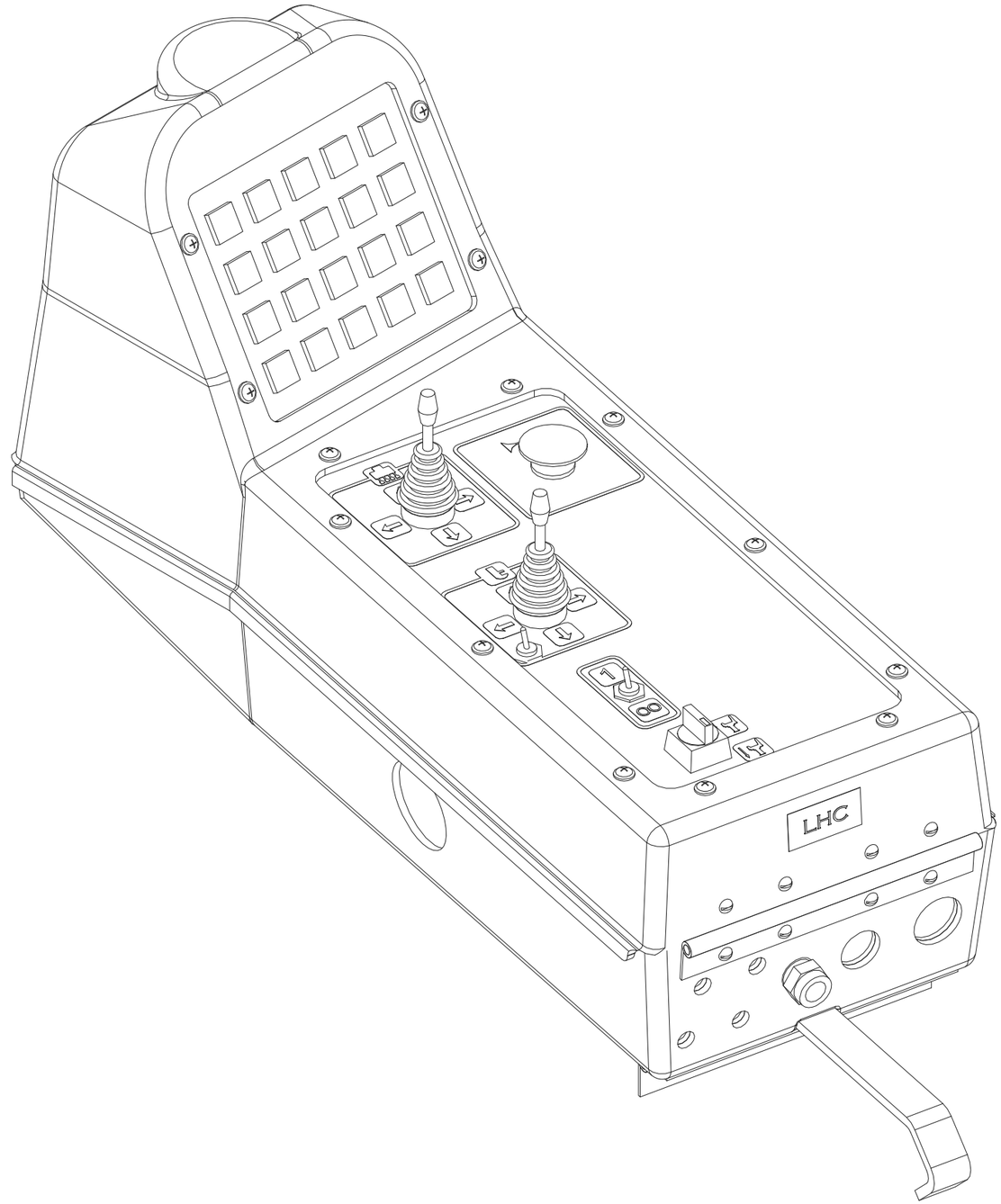

CONFIDENTIAL

©COPYRIGHT 2011 HARSCO. THIS DRAWING OR DOCUMENT IS THE PROPERTY OF HARSCO AND EMBODIES CONFIDENTIAL INFORMATION, TRADE SECRET INFORMATION, AND/OR KNOW-HOW THAT IS THE PROPERTY OF HARSCO. BY ACCEPTING THIS DRAWING OR DOCUMENT, THE RECIPIENT AGREES (1) NOT TO PROVIDE, OR OTHERWISE MAKE AVAILABLE, THE DRAWING OR DOCUMENT, OR ANY INFORMATION OR KNOW-HOW EMBODIED THEREIN, TO ANY THIRD PARTY AND (2) NOT TO REPRODUCE OR USE THE DRAWING OR DOCUMENT TO MANUFACTURE ANY APPARATUS OR DEVICE, WITHOUT THE PRIOR WRITTEN AUTHORIZATION OF HARSCO.

CHANGE #		REVISION	DR	DATE
EC501059	A	NEW RELEASE	CJW	05/11
EC501131	B	ADDED LIGHTS TO BUGGY, NEW FJB	CJW	05/11
EC501418	C	UPDATE AS BUILT	CJW	06/11
EC501821	D	UPDATE AS BUILT	CJW	08/11
EC502003	E	UPDATE SHT 12, 13, 14 FOR DRONE KIT, CORRECT C08 ON SHT 15	CJW	09-22-11
EC502615	F	ADD ITEMS 860-930, ENGINE ECM WIRING SHEET 15	CJW	01-05-12
EC502851	G	UPDATED CABLE CHARTS FOR LT3250 & LT3270 ON SHEET 14	CJW	02-08-12
EC503310	H	SEE EC FOR CHANGE DETAIL	CJW	04-09-12

DRAWING TITLE/DESCRIPTION:
INTERCONNECT WIRING
Left Armrest Assembly

MACHINE TYPE-MODEL:
MARK IV

E3 PROJECT FILE NAME:
MARK IV HD_10

SHEET NUMBER: 9

NUMBER OF JUPITER SHEETS: -

TOTAL NUMBER OF SHEETS: 15

DRAWN BY: CJW

REL. DATE: 05/11

SIZE: D

SCALE:

HARSCO RAIL

E3 DRAWING

5007958

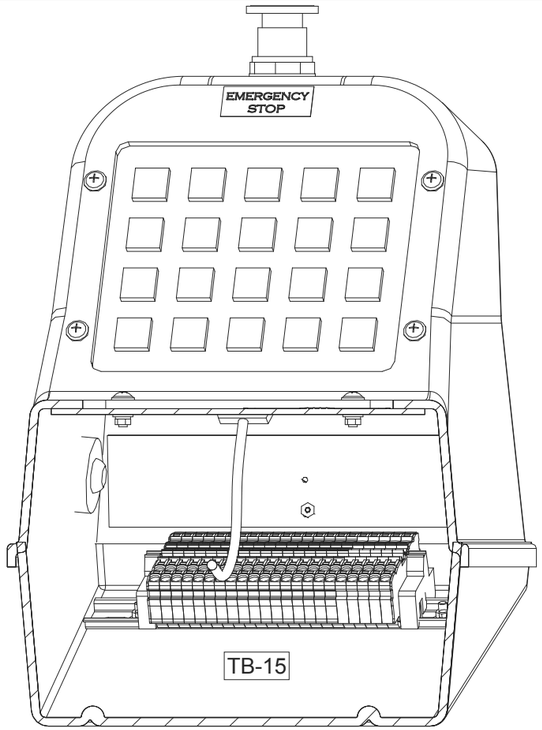

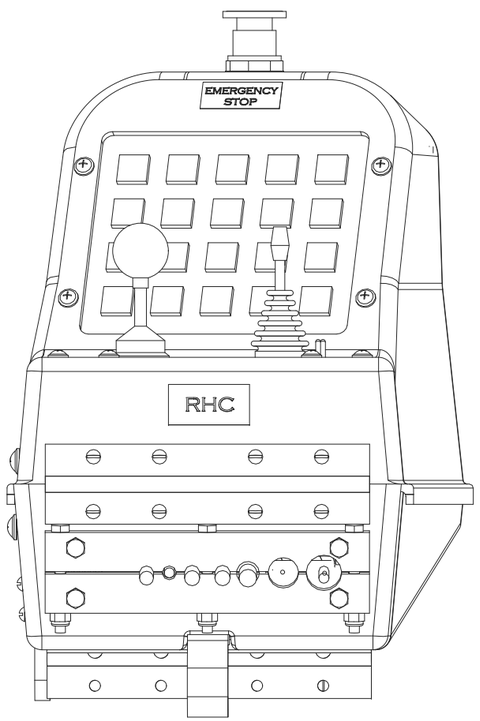

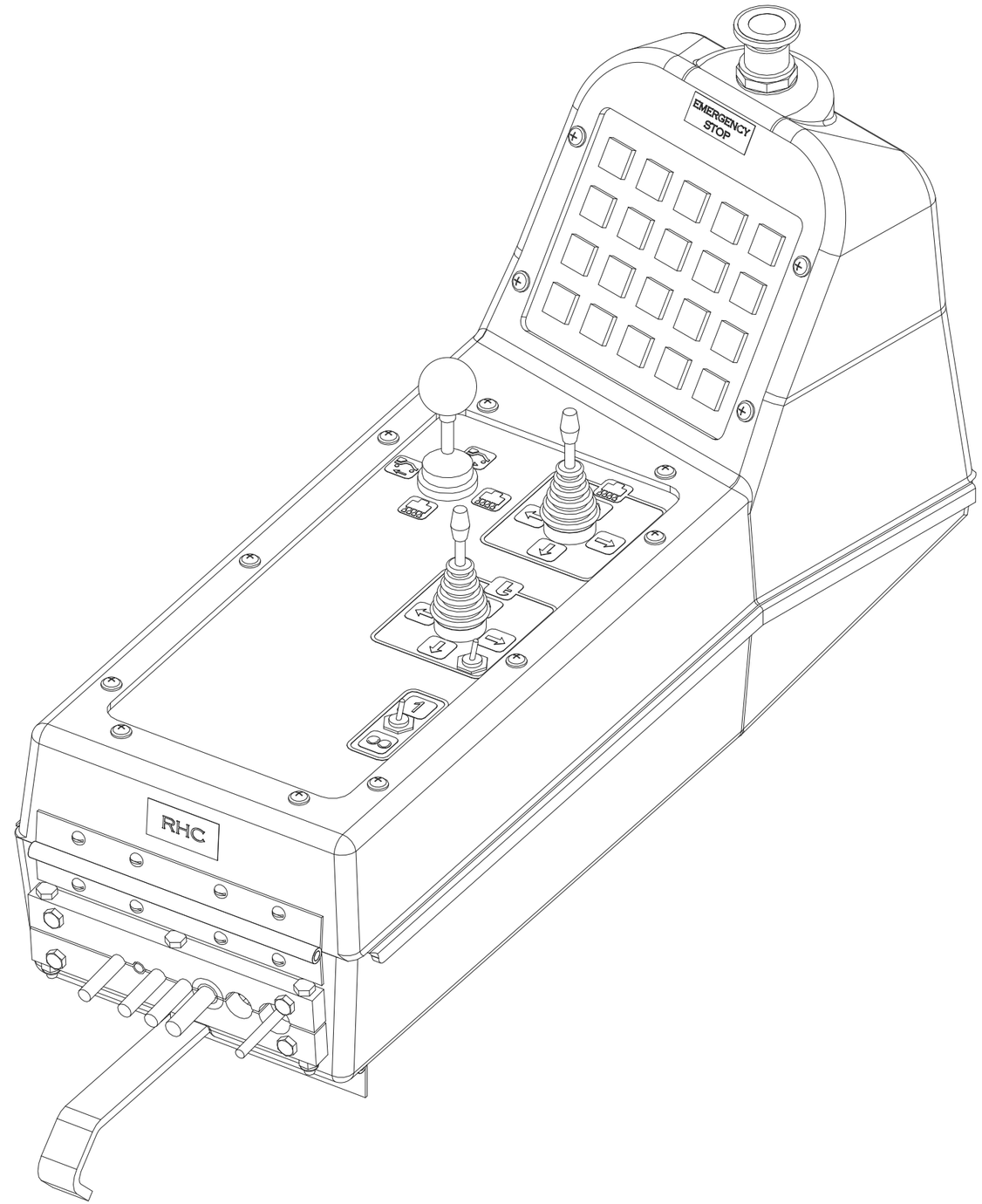

CONFIDENTIAL

©COPYRIGHT 2011 HARSCO. THIS DRAWING OR DOCUMENT IS THE PROPERTY OF HARSCO AND EMBODIES CONFIDENTIAL INFORMATION, TRADE SECRET INFORMATION, AND/OR KNOW-HOW THAT IS THE PROPERTY OF HARSCO. BY ACCEPTING THIS DRAWING OR DOCUMENT, THE RECIPIENT AGREES (1) NOT TO PROVIDE, OR OTHERWISE MAKE AVAILABLE, THE DRAWING OR DOCUMENT, OR ANY INFORMATION OR KNOW-HOW EMBODIED THEREIN, TO ANY THIRD PARTY AND (2) NOT TO REPRODUCE OR USE THE DRAWING OR DOCUMENT TO MANUFACTURE ANY APPARATUS OR DEVICE, WITHOUT THE PRIOR WRITTEN AUTHORIZATION OF HARSCO.

CHANGE #		REVISION	DR	DATE
EC501059	A	NEW RELEASE	CJW	05/11
EC501131	B	ADDED LIGHTS TO BUGGY, NEW FJB	CJW	05/11
EC501418	C	UPDATE AS BUILT	CJW	06/11
EC501821	D	UPDATE AS BUILT	CJW	08/11
EC502003	E	UPDATE SHT 12, 13, 14 FOR DRONE KIT, CORRECT C08 ON SHT 15	CJW	09-22-11
EC502615	F	ADD ITEMS 860-930, ENGINE ECM WIRING SHEET 15	CJW	01-05-12
EC502851	G	UPDATED CABLE CHARTS FOR LT3250 & LT3270 ON SHEET 14	CJW	02-08-12
EC503310	H	SEE EC FOR CHANGE DETAIL	CJW	04-09-12

DRAWING TITLE/DESCRIPTION:
INTERCONNECT WIRING
Right Armrest Assembly

MACHINE TYPE-MODEL:
MARK IV

E3 PROJECT FILE NAME:
MARK IV HD_10

SHEET NUMBER: 10
NUMBER OF JUPITER SHEETS: -
TOTAL NUMBER OF SHEETS: 15

DRAWN BY: CJW
REL. DATE: 05/11
SIZE: D
SCALE:

HARSCO RAIL

E3 DRAWING
5007958

EXISTING CABLES FROM RHC

CAN:01 TO CAN:02 — NET1-2 — CABLE ASSEMBLY, M12
RHC — 4022331 — RHC

RUN	COLOR	WIRE #	FROM	TERM NO.	TO	TERM NO.
1	PK	000W	CAN:02:C-IN	EXISTS	J42:1	EXISTS
2	RD	J01525	CAN:02:C-IN	EXISTS	J42:2	-
3	BU	000W	CAN:02:C-IN	EXISTS	J42:3	-
4	WH	J01558	CAN:02:C-IN	EXISTS	J42:4	-
5	BN	J01575	CAN:02:C-IN	EXISTS	J42:5	-
6	SH	**NC**	CAN:02:C-IN	EXISTS	-	-

CAN:02 TO CAN:03 — NET2-3 — CABLE ASSEMBLY, M12
RHC — 4022331 — JUP INSTALL

RUN	COLOR	WIRE #	FROM	TERM NO.	TO	TERM NO.
1	PU	NET2-3	CAN:02:C-OUT	EXISTS	CAN:03:C-IN	EXISTS

CAN:02 POWER — J02FP_A — CABLE ASSEMBLY, M12
RHC — 4022333 — RHC

RUN	COLOR	WIRE #	FROM	TERM NO.	TO	TERM NO.
1	W-1	4120	CAN:02:FPA	EXISTS	TB15:20	-
2	W-2	4120	CAN:02:FPA	EXISTS	TB15:20	-
3	W-3	000W	CAN:02:FPA	EXISTS	TB15:22	-
4	W-4	000W	CAN:02:FPA	EXISTS	TB15:22	-
5	W-5	**NC**	CAN:02:FPA	EXISTS	-	-

CAN:02 POWER — J02FP_B — CABLE ASSEMBLY, M12
RHC — 4022333 — RHC

RUN	COLOR	WIRE #	FROM	TERM NO.	TO	TERM NO.
1	W-1	4120	CAN:02:FPB	EXISTS	TB15:21	-
2	W-2	4120	CAN:02:FPB	EXISTS	TB15:21	-
3	W-3	000W	CAN:02:FPB	EXISTS	TB15:23	-
4	W-4	000W	CAN:02:FPB	EXISTS	TB15:23	-
5	W-5	**NC**	CAN:02:FPB	EXISTS	-	-

FLOOR CYCLE SWITCH — S2B640 — CABLE ASSEMBLY, M12
RHC — 4016221 — RHC

RUN	COLOR	WIRE #	FROM	TERM NO.	TO	TERM NO.
1	WH-1	J02B642	SJ02B675	EXISTS	TB15:14	-
2	WH-2	J02B658	SJ02B675	EXISTS	TB15:15	-
3	WH-3	**NC**	SJ02B675	EXISTS	-	-
4	WH-4	**NC**	SJ02B675	EXISTS	-	-
5	WH-5	**NC**	SJ02B675	EXISTS	-	-

EXISTING CABLES FROM RHC

RHC TO LHC CABLE — RHC_LHC — 15FT
RHC — F018248K — LHC

RUN	COLOR	WIRE #	FROM	TERM NO.	TO	TERM NO.
1	BK	2450	TB15:5	-	TB17:1	-
2	WH	000	TB15:25	-	TB17:25	-
3	RD	J02B335	MODJ02A125:C6-1	-	TB17:5	-
4	GN	J02B350	MODJ02A125:C6-2	-	TB17:6	-
5	OR	J02B367	MODJ02A125:C6-3	-	TB17:7	-
6	BU	J02B383	MODJ02A125:C6-4	-	TB17:8	-
7	WH/BK	J02B408	MODJ02A125:C6-5	-	TB17:9	-
8	RD/BK	J02B425	MODJ02A125:C6-6	-	TB17:10	-
9	GN/BK	J02B442	MODJ02A125:C6-7	-	TB17:11	-
10	OR/BK	J02B458	MODJ02A125:C6-8	-	TB17:12	-
11	BU/BK	J02B333	MODJ02A125:C6-18	-	TB17:13	-
12	BK/WH	J02B533	MODJ02A125:C7-1	-	TB17:14	-
13	RD/WH	J02B550	MODJ02A125:C7-2	-	TB17:15	-
14	GN/WH	J02B567	MODJ02A125:C7-3	-	TB17:16	-
15	BU/WH	J02B583	MODJ02A125:C7-4	-	TB17:17	-
16	BK/RD	J02B608	MODJ02A125:C7-5	-	TB17:18	-
17	WH/RD	J02B642	TB15:14	-	TB17:19	-
18	OR/RD	1240	TB15:1	-	TB17:20	-
19	BU/RD	000	TB15:24	-	TB17:24	-
20	RD/GN	**NC**	-	-	-	-

RHC TO MCB CABLE — RHC_MCB — 25FT
RHC — L421290 — MCB

RUN	COLOR	WIRE #	FROM	TERM NO.	TO	TERM NO.
1	BK	1240	TB15:1	-	TB1:4	-
2	WH	1220	TB15:2	-	TB1:39	-
3	RD	1332	TB15:3	-	TB1:9	-
4	GN	1335	TB15:4	-	TB1:12	-
5	OR	4120	TB15:20	-	TB2:2	-
6	BU	000W	TB15:22	-	TB4:3	-
7	WH/BK	J02A261	TB15:7	-	TB1:33	-
8	RD/BK	2450	TB15:5	-	TB1:19	-
9	GN/BK	J02A259	TB15:8	-	TB1:34	-
10	OR/BK	**NC**	-	-	-	-
11	BU/BK	**NC**	-	-	-	-
12	BK/WH	000	TB15:24	-	TB3:18	-
13	RD/WH	000	TB15:26	-	TB3:19	-
14	GN/WH	**NC**	-	-	-	-
15	BU/WH	**NC**	-	-	-	-
16	BK/RD	**NC**	-	-	-	-

EXISTING CABLE FROM LHC

SEAT ACTUATOR MOTOR CABLE — B2500 — 10FT
LHC — F012388 — SEAT

RUN	COLOR	WIRE #	FROM	TERM NO.	TO	TERM NO.
1	BK	2515	TB17:2	-	M2520:+	-
2	WH	2510	TB17:3	-	M2520:-	-

SPRING BRAKE BLOWDOWN — L1210 — 3FT
LHC — F012388 — FRAME

RUN	COLOR	WIRE #	FROM	TERM NO.	TO	TERM NO.
1	BK	000	TB17:23	-	L1210:-	-
2	WH	1240	TB17:20	-	L1210:+	-

CONFIDENTIAL

©COPYRIGHT 2011 HARSCO. THIS DRAWING OR DOCUMENT IS THE PROPERTY OF HARSCO AND EMBODIES CONFIDENTIAL INFORMATION, TRADE SECRET INFORMATION, AND/OR KNOW-HOW THAT IS THE PROPERTY OF HARSCO. BY ACCEPTING THIS DRAWING OR DOCUMENT, THE RECIPIENT AGREES (1) NOT TO PROVIDE, OR OTHERWISE MAKE AVAILABLE, THE DRAWING OR DOCUMENT, OR ANY INFORMATION OR KNOW-HOW EMBODIED THEREIN, TO ANY THIRD PARTY AND (2) NOT TO REPRODUCE OR USE THE DRAWING OR DOCUMENT TO MANUFACTURE ANY APPARATUS OR DEVICE, WITHOUT THE PRIOR WRITTEN AUTHORIZATION OF HARSCO.

CHANGE #		REVISION	DR	DATE
EC501059	A	NEW RELEASE	CJW	05/11
EC501131	B	ADDED LIGHTS TO BUGGY, NEW FJB	CJW	05/11
EC501418	C	UPDATE AS BUILT	CJW	06/11
EC501821	D	UPDATE AS BUILT	CJW	08/11
EC502003	E	UPDATE SHT 12, 13, 14 FOR DRONE KIT, CORRECT C08 ON SHT 15	CJW	09-22-11
EC502615	F	ADD ITEMS 860-930, ENGINE ECM WIRING SHEET 15	CJW	01-05-12
EC502851	G	UPDATED CABLE CHARTS FOR LT3250 & LT3270 ON SHEET 14	CJW	02-08-12
EC503310	H	SEE EC FOR CHANGE DETAIL	CJW	04-09-12

DRAWING TITLE/DESCRIPTION:
INTERCONNECT WIRING
Armrest Cable Charts

MACHINE TYPE-MODEL:
MARK IV

E3 PROJECT FILE NAME:
MARK IV HD_10

SHEET NUMBER: 11
NUMBER OF JUPITER SHEETS: -
TOTAL NUMBER OF SHEETS: 15

DRAWN BY: CJW
REL. DATE: 05/11
SIZE: D
SCALE:

HARSCO RAIL

E3 DRAWING

5007958

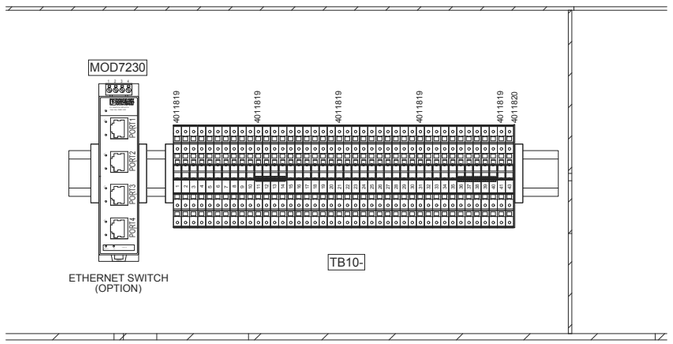

SECTION B-B

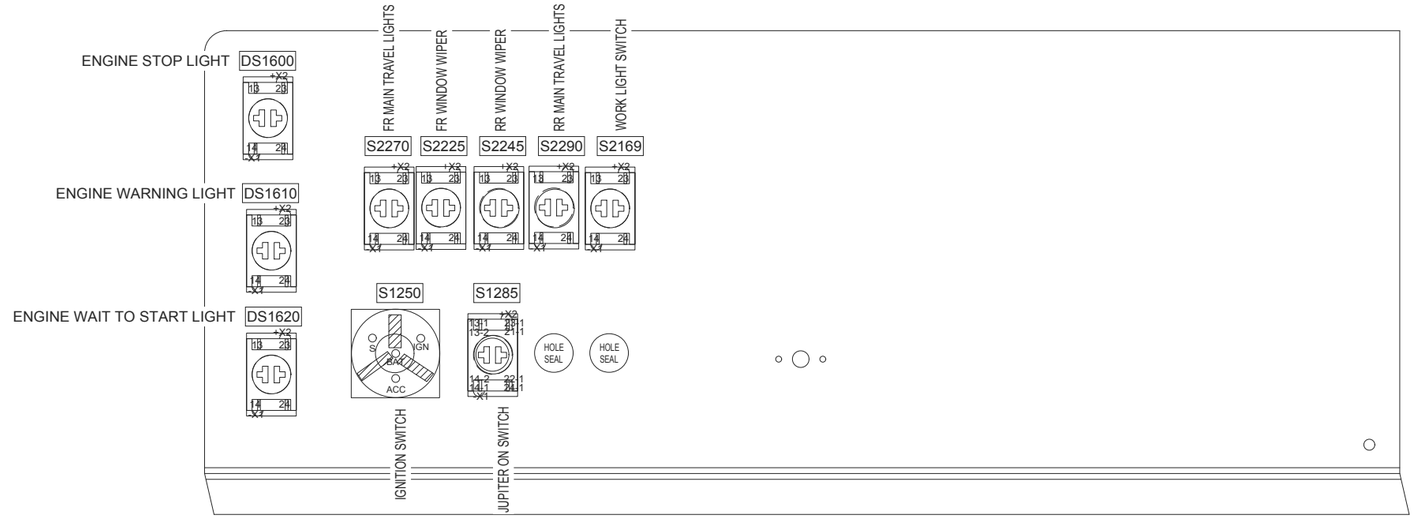

BACK OF KEYBOARD SUPPORT

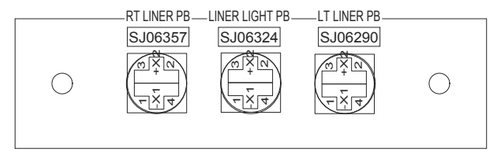

BACK OF DRAWER BOTTOM FOR LIGHTS

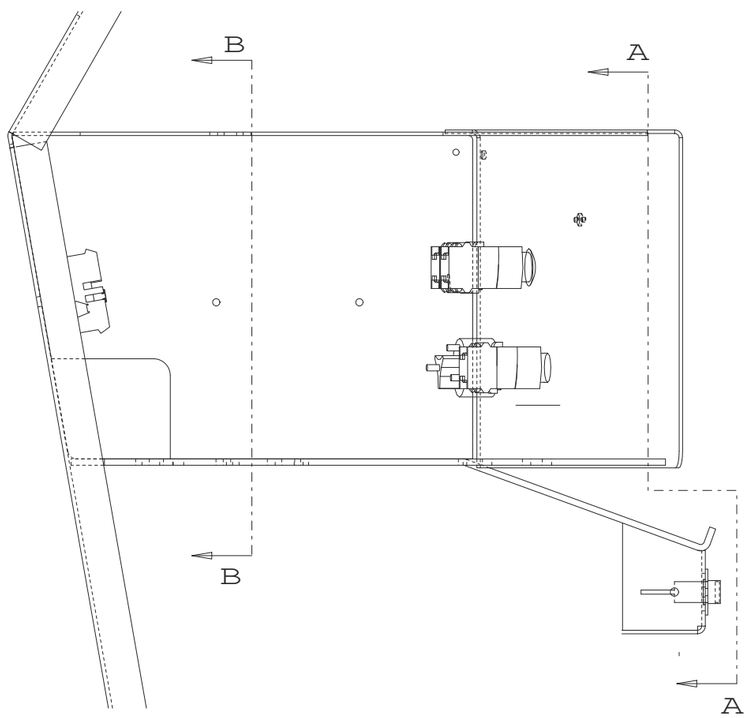

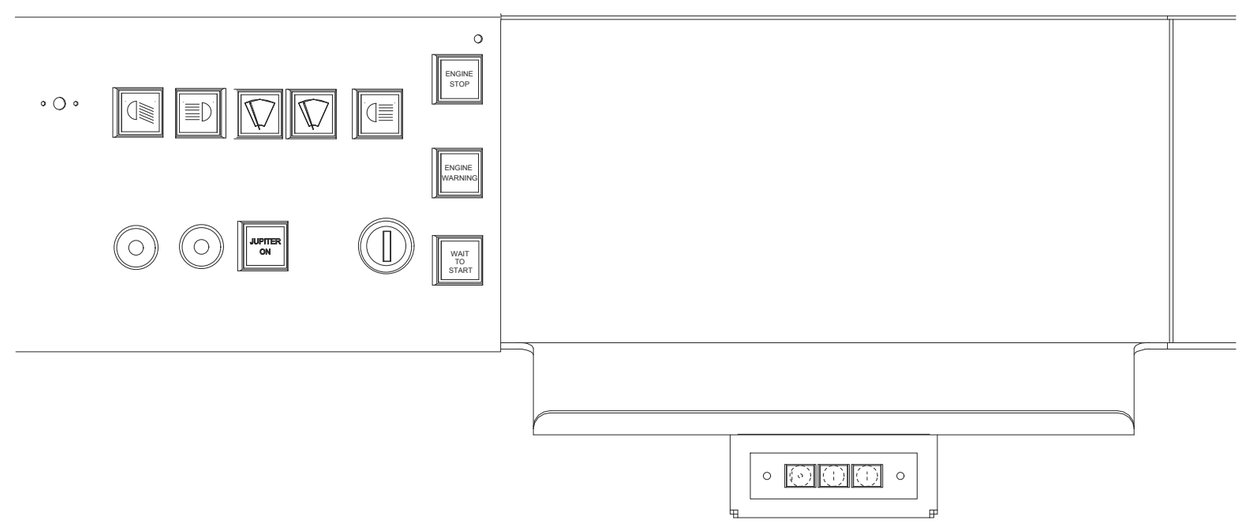

SECTION A-A

CONFIDENTIAL

©COPYRIGHT 2011 HARSCO. THIS DRAWING OR DOCUMENT IS THE PROPERTY OF HARSCO AND EMBODIES CONFIDENTIAL INFORMATION, TRADE SECRET INFORMATION, AND/OR KNOW-HOW THAT IS THE PROPERTY OF HARSCO. BY ACCEPTING THIS DRAWING OR DOCUMENT, THE RECIPIENT AGREES (1) NOT TO PROVIDE, OR OTHERWISE MAKE AVAILABLE, THE DRAWING OR DOCUMENT, OR ANY INFORMATION OR KNOW-HOW EMBODIED THEREIN, TO ANY THIRD PARTY AND (2) NOT TO REPRODUCE OR USE THE DRAWING OR DOCUMENT TO MANUFACTURE ANY APPARATUS OR DEVICE, WITHOUT THE PRIOR WRITTEN AUTHORIZATION OF HARSCO.

CHANGE #		REVISION	DR	DATE
EC501059	A	NEW RELEASE	CJW	05/11
EC501131	B	ADDED LIGHTS TO BUGGY, NEW FJB	CJW	05/11
EC501418	C	UPDATE AS BUILT	CJW	06/11
EC501821	D	UPDATE AS BUILT	CJW	08/11
EC502003	E	UPDATE SHT 12, 13, 14 FOR DRONE KIT, CORRECT C08 ON SHT 15	CJW	09-22-11
EC502615	F	ADD ITEMS 860-930, ENGINE ECM WIRING SHEET 15	CJW	01-05-12
EC502851	G	UPDATED CABLE CHARTS FOR LT3250 & LT3270 ON SHEET 14	CJW	02-08-12
EC503310	H	SEE EC FOR CHANGE DETAIL	CJW	04-09-12

DRAWING TITLE/DESCRIPTION:
INTERCONNECT WIRING
ECP Panel Assembly

MACHINE TYPE-MODEL:
MARK IV

E3 PROJECT FILE NAME:
MARK IV HD_10

SHEET NUMBER: 12
NUMBER OF JUPITER SHEETS: -
TOTAL NUMBER OF SHEETS: 15

DRAWN BY: CJW
REL. DATE: 05/11
SIZE: D
SCALE:

HARSCO RAIL

E3 DRAWING

5007958

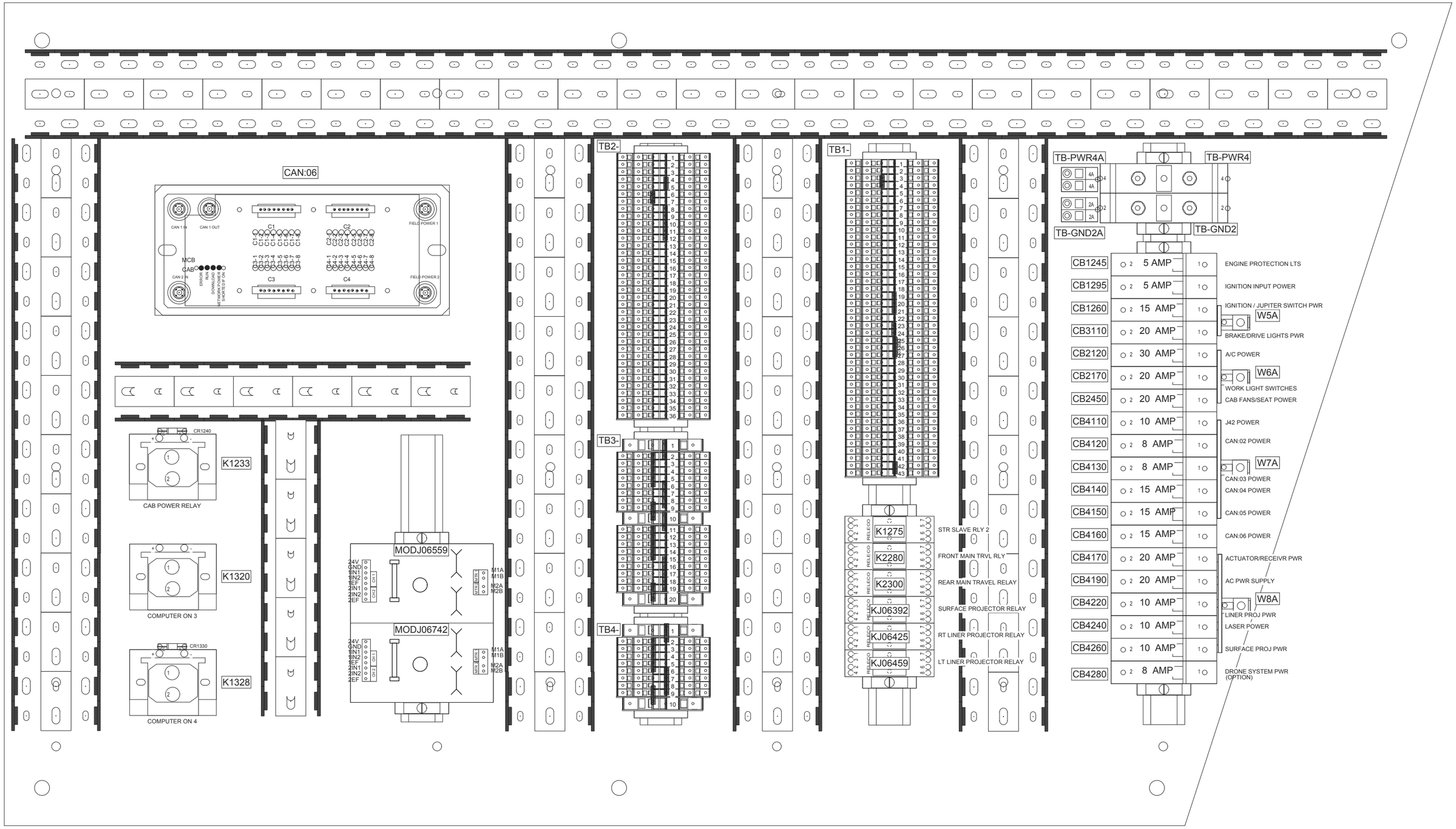

CONFIDENTIAL

©COPYRIGHT 2011 HARSCO. THIS DRAWING OR DOCUMENT IS THE PROPERTY OF HARSCO AND EMBODIES CONFIDENTIAL INFORMATION, TRADE SECRET INFORMATION, AND/OR KNOW-HOW THAT IS THE PROPERTY OF HARSCO. BY ACCEPTING THIS DRAWING OR DOCUMENT, THE RECIPIENT AGREES (1) NOT TO PROVIDE, OR OTHERWISE MAKE AVAILABLE, THE DRAWING OR DOCUMENT, OR ANY INFORMATION OR KNOW-HOW EMBODIED THEREIN, TO ANY THIRD PARTY AND (2) NOT TO REPRODUCE OR USE THE DRAWING OR DOCUMENT TO MANUFACTURE ANY APPARATUS OR DEVICE, WITHOUT THE PRIOR WRITTEN AUTHORIZATION OF HARSCO.

CHANGE #		REVISION	DR	DATE
EC501059	A	NEW RELEASE	CJW	05/11
EC501131	B	ADDED LIGHTS TO BUGGY, NEW FJB	CJW	05/11
EC501418	C	UPDATE AS BUILT	CJW	06/11
EC501821	D	UPDATE AS BUILT	CJW	08/11
EC502003	E	UPDATE SHT 12, 13, 14 FOR DRONE KIT, CORRECT C08 ON SHT 15	CJW	09-22-11
EC502615	F	ADD ITEMS 860-930, ENGINE ECM WIRING SHEET 15	CJW	01-05-12
EC502851	G	UPDATED CABLE CHARTS FOR LT3250 & LT3270 ON SHEET 14	CJW	02-08-12
EC503310	H	SEE EC FOR CHANGE DETAIL	CJW	04-09-12

DRAWING TITLE/DESCRIPTION:
INTERCONNECT WIRING
MCB Panel Assembly

MACHINE TYPE-MODEL:
MARK IV

E3 PROJECT FILE NAME:
MARK IV HD_10

SHEET NUMBER: 13
NUMBER OF JUPITER SHEETS: -
TOTAL NUMBER OF SHEETS: 15

DRAWN BY: CJW
REL. DATE: 05/11
SIZE: D
SCALE:

HARSCO RAIL

E3 DRAWING
5007958

EXISTING CABLE FROM CAB WIRING

SERIAL CABLE CAB			COM3 187919		CABLE ASSEMBLY, DB9 CAB	
RUN	COLOR	WIRE #	FROM	TERM NO.	TO	TERM NO.
1	BK	COM3	J42:DB9	EXISTS	CAN:01:COM3	EXISTS

VGA - VIDEO CAB			J01100 410378		CABLE ASSEMBLY, DB15 CAB	
RUN	COLOR	WIRE #	FROM	TERM NO.	TO	TERM NO.
1	BK	J01100	CAN:01:VGA	EXISTS	MONJ01209:VGA	EXISTS

MCB TO ECP CABLE #1 ECP			MCB_ECP1 F018248K		23FT MCB	
RUN	COLOR	WIRE #	FROM	TERM NO.	TO	TERM NO.
1	BK	1260	TB10:1	-	TB1:1	-
2	WH	1240	TB10:2	-	TB1:3	-
3	RD	1245	TB10:5	-	TB1:6	-
4	GN	1268	TB10:32	-	TB1:7	-
5	OR	1262	TB10:3	-	TB1:8	-
6	BU	**NC**	-	-	-	-
7	WH/BK	1295	TB10:10	-	TB1:11	-
8	RD/BK	2280	TB10:19	-	TB1:17	-
9	GN/BK	2300	TB10:20	-	TB1:18	-
10	OR/BK	3485	TB10:22	-	TB2:12	-
11	BU/BK	J06208	TB10:23	-	TB2:28	-
12	BK/WH	J06233	TB10:24	-	TB2:29	-
13	RD/WH	J06258	TB10:25	-	TB2:30	-
14	GN/WH	2450	TB10:33	-	TB1:20	-
15	BU/WH	4112	TB10:30	-	TB2:1	-
16	BK/RD	2240	TB10:17	-	TB1:37	-
17	WH/RD	2260	TB10:18	-	TB1:38	-
18	OR/RD	**NC**	-	-	-	-
19	BU/RD	000W	TB10:42	-	K1328:1	5757 (OPTION)
20	RD/GN	4120	TB10:41	-	CB7110:2	- (OPTION)

MCB TO ECP CABLE #2 ECP			MCB_ECP2 0-3212004-0-47		23FT MCB	
RUN	COLOR	WIRE #	FROM	TERM NO.	TO	TERM NO.
1	BK	000	TB10:40	-	TB3:3	-
2	WH	2170	TB10:11	-	TB1:16	-
3	RD	5450	TB10:26	-	TB1:32	-
4	GN	4190	TB10:34	-	TB2:13	-
5	OR	000W	TB10:31	-	TB4:2	-

A/C POWER SUPPLY ECP			PS4190 F018250		10FT CAB	
RUN	COLOR	WIRE #	FROM	TERM NO.	TO	TERM NO.
1	BK	000W	TB10:31	-	PS4190:-	F016461K
2	WH	4190	TB10:34	-	PS4190:+	F016461K

NEW CABLES TO ECP

SATELLITE RADIO POWER OPT SAT RADIO			AR6160 F012388		40FT OPT SAT RADIO	
RUN	COLOR	WIRE #	FROM	TERM NO.	TO	TERM NO.
1	BK	000	000	-	AR6160:BK-1	-
2	WH	6160	CB6160:2	-	AR6160:RD-1	-

EXISTING CABLE FROM CAB WIRING

A/C VENT SOLENOID A/C			L2150 4022348/CUT		CABLE ASSEMBLY, M12 MCB	
RUN	COLOR	WIRE #	FROM	TERM NO.	TO	TERM NO.
1	W-1	2145	L2150:1	EXISTS	TB1:15	-
2	W-2	000	L2150:1	EXISTS	TB3:6	-
3	W-3	**NC**	L2150:1	EXISTS	-	-

CAN:01 POWER CABLE CAB			CAN01_PWR 701113018		6FT CAB	
RUN	COLOR	WIRE #	FROM	TERM NO.	TO	TERM NO.
1	BK	J01475	CAN:01:GND	-	J42:RTN	-
2	WH	J01442	CAN:01:PWR	-	J42:+24V	-

J42 POWER CABLE ECP			J42_PWR 701113018		4FT CAB	
RUN	COLOR	WIRE #	FROM	TERM NO.	TO	TERM NO.
1	BK	000W	TB10:31	-	J42:RTN	-
2	WH	4112	TB10:30	-	J42:+24	-

NEW CABLES FROM MCB

E-STOP BRAKE VALVE I/C			L1220 3401344		CABLE ASSEMBLY, M12 MCB	
RUN	COLOR	WIRE #	FROM	TERM NO.	TO	TERM NO.
1	BK	L1220	-	-	L1220:DIN	EXISTS
2	WH-1	1220	-	-	TB1:39	-
3	WH-2	000	-	-	TB3:2	-
4	WH-3	**NC**	-	-	-	-

550 2 | 160 2 | 820 1

REAR MOTION ALARM I/C			LS02A225 F012388		20FT MCB	
RUN	COLOR	WIRE #	FROM	TERM NO.	TO	TERM NO.
1	BK	J02A261	LSJ02A234:-	-	TB1:33	-
2	WH	J02A259	LSJ02A234:+	-	TB1:34	-

550 2 | 160 2 | 490 20

BRAKE PRESSURE SWITCH MCB			S3180 F012388		20FT REAR_FRAME	
RUN	COLOR	WIRE #	FROM	TERM NO.	TO	TERM NO.
1	BK	3110	TB1:24	-	S3180:C	-
2	WH	3177	TB1:28	-	S3180:NO	-

550 2 | 160 2 | 490 20

AIR CONDITIONER MCB			B2120 0-3212004-0-47		23FT A/C	
RUN	COLOR	WIRE #	FROM	TERM NO.	TO	TERM NO.
1	BK	000	TB3:5	-	B2120:-	-
2	WH	2122	TB1:13	-	B2120:+	-
3	RD	2145	TB1:15	-	B2120	-
4	GN	2135	TB1:14	-	B2120	-
5	OR	**NC**	-	-	-	-

550 2 | 160 2 | 270 23

***NEW CABLES FROM FRONT JBOX TO LIGHTS**

LEFT FR TAIL LIGHT FRONT JBOX			LT3250 F016189		7FT I/C	
RUN	COLOR	WIRE #	FROM	TERM NO.	TO	TERM NO.
1	BK	3220	TB20:1	-	LT3250.P1:BK	-
2	WH	000	TB20:10	-	LT3250.P1:WH	-
3	RD	3177	TB20:2	-	LT3250.P1:RD	-
4	GN	**NC**	-	-	-	-

550 2 | 130 1 | 780 7 | 160 2

RIGHT FR TAIL LIGHT FRONT JBOX			LT3270 F016189		10FT I/C	
RUN	COLOR	WIRE #	FROM	TERM NO.	TO	TERM NO.
1	BK	3220	TB20:1	-	LT3270.P1:BK	-
2	WH	000	TB20:10	-	LT3270.P1:WH	-
3	RD	3177	TB20:2	-	LT3270.P1:RD	-
4	GN	**NC**	-	-	-	-

550 2 | 130 1 | 780 10 | 160 2

CONFIDENTIAL

©COPYRIGHT 2011 HARSCO. THIS DRAWING OR DOCUMENT IS THE PROPERTY OF HARSCO AND EMBODIES CONFIDENTIAL INFORMATION, TRADE SECRET INFORMATION, AND/OR KNOW-HOW THAT IS THE PROPERTY OF HARSCO. BY ACCEPTING THIS DRAWING OR DOCUMENT, THE RECIPIENT AGREES (1) NOT TO PROVIDE, OR OTHERWISE MAKE AVAILABLE, THE DRAWING OR DOCUMENT, OR ANY INFORMATION OR KNOW-HOW EMBODIED THEREIN, TO ANY THIRD PARTY AND (2) NOT TO REPRODUCE OR USE THE DRAWING OR DOCUMENT TO MANUFACTURE ANY APPARATUS OR DEVICE, WITHOUT THE PRIOR WRITTEN AUTHORIZATION OF HARSCO.

CHANGE #		REVISION	DR	DATE
EC501059	A	NEW RELEASE	CJW	05/11
EC501131	B	ADDED LIGHTS TO BUGGY, NEW FJB	CJW	05/11
EC501418	C	UPDATE AS BUILT	CJW	06/11
EC501821	D	UPDATE AS BUILT	CJW	08/11
EC502003	E	UPDATE SHT 12, 13, 14 FOR DRONE KIT, CORRECT C08 ON SHT 15	CJW	09-22-11
EC502615	F	ADD ITEMS 860-930, ENGINE ECM WIRING SHEET 15	CJW	01-05-12
EC502851	G	UPDATED CABLE CHARTS FOR LT3250 & LT3270 ON SHEET 14	CJW	02-08-12
EC503310	H	SEE EC FOR CHANGE DETAIL	CJW	04-09-12

DRAWING TITLE/DESCRIPTION:
INTERCONNECT WIRING
MCB Panel Cable Charts

MACHINE TYPE-MODEL:
MARK IV

E3 PROJECT FILE NAME:
MARK IV HD_10

SHEET NUMBER: 14
NUMBER OF JUPITER SHEETS: -
TOTAL NUMBER OF SHEETS: 15

DRAWN BY: CJW
REL. DATE: 05/11
SIZE: D
SCALE:

HARSCO RAIL

E3 DRAWING
5007958

NEW CABLES

ECM CIRCUIT BREAKER I/C			C08 3407028			5FT I/C
RUN	COLOR	WIRE #	FROM	TERM NO.	TO	TERM NO.
1	BLACK	1130	CB1135-1	F009729K	S1110-1	F009038K

RUN WIRE(S) TOGETHER IN SPLIT LOOM FOR PROTECTON

550 / 2 — 150 / 2 — 100 / 5

BATTERY SWITCH I/C			C10 A2903YAA			2FT I/C
RUN	COLOR	WIRE #	FROM	TERM NO.	TO	TERM NO.
1	BK	1112	S1110:b1	L422508	BT1110:+	L422459

RUN WIRE(S) TOGETHER IN SPLIT LOOM FOR PROTECTON

550 / 2 — 150 / 2 — 370 / 1

BATTERY JUMPER I/C			C12 A2899YAA			2FT I/C
RUN	COLOR	WIRE #	FROM	TERM NO.	TO	TERM NO.
1	BK	1116	BT1112:+	L422508	BT1110:-	L422459

RUN WIRE(S) TOGETHER IN SPLIT LOOM FOR PROTECTON

550 / 2 — 150 / 2 — 360 / 1

STARTER MOTOR ENGINE			B1175 F021916			5FT FRAME
RUN	COLOR	WIRE #	FROM	TERM NO.	TO	TERM NO.
1	BK	1110	K1265:1	0-3255008-0-02	B1175:+	F020062K
2	WH	1180	K1265:2	0-3255008-0-02	B1175:K	F020062K

RUN WIRE(S) TOGETHER IN SPLIT LOOM FOR PROTECTON

550 / 2 — 150 / 2 — 60 / 3 — 580 / 5

EMERGENCY PUMP I/C			C16 L411078			18FT FRAME
RUN	COLOR	WIRE #	FROM	TERM NO.	TO	TERM NO.
1	BK	1110	S1110:b2	L422508	K1150:+	L422508

RUN WIRE(S) TOGETHER IN SPLIT LOOM FOR PROTECTON

550 / 2 — 150 / 2 — 670 / 18

STARTER TO ENG. GND FRAME			C18 0-3211009-0-18			2FT ENGINE
RUN	COLOR	WIRE #	FROM	TERM NO.	TO	TERM NO.
1	BK	000	B1175:GND	L422508	GND_ENG:GND	L424722

RUN WIRE(S) TOGETHER IN SPLIT LOOM FOR PROTECTON

550 / 2 — 150 / 2 — 260 / 2

BATTERY TO FRAME GND I/C			C20 A2898YAA			2FT FRAME
RUN	COLOR	WIRE #	FROM	TERM NO.	TO	TERM NO.
1	BK	000	BT1112:-	L422459	GND_FRM:GND	L422508

RUN WIRE(S) TOGETHER IN SPLIT LOOM FOR PROTECTON

550 / 2 — 150 / 2 — 350 / 1

STARTER PWR I/C			C22 0-3211009-0-18			20FT FRAME
RUN	COLOR	WIRE #	FROM	TERM NO.	TO	TERM NO.
1	BK	1110	S1110:b2	0-3250001-0-78	B1175:+	L424722

RUN WIRE(S) TOGETHER IN SPLIT LOOM FOR PROTECTON

550 / 2 — 150 / 2 — 260 / 20

ALTERNATOR I/C			C24 0-3211009-0-18			20FT ENGINE
RUN	COLOR	WIRE #	FROM	TERM NO.	TO	TERM NO.
1	BK	1110	S1110:b2	0-3250001-0-78	MG1193:+	0-3250001-0-78

RUN WIRE(S) TOGETHER IN SPLIT LOOM FOR PROTECTON

550 / 2 — 150 / 2 — 260 / 20

ALT. TO ENGINE GND ENGINE			C26 0-3211009-0-18			2FT ENGINE
RUN	COLOR	WIRE #	FROM	TERM NO.	TO	TERM NO.
1	BK	000	GND_ENG:GND	L422508	MG1193:-	L424722

RUN WIRE(S) TOGETHER IN SPLIT LOOM FOR PROTECTON

550 / 2 — 150 / 2 — 260 / 2

ENGINE TO FRAME GND ENGINE			C28 0-3211009-0-18			15FT FRAME
RUN	COLOR	WIRE #	FROM	TERM NO.	TO	TERM NO.
1	BK	000	GND_ENG:GND	L424722	GND_FRM:GND	L422508

RUN WIRE(S) TOGETHER IN SPLIT LOOM FOR PROTECTON

550 / 2 — 150 / 2 — 260 / 15

ALTERNATOR FUSE I/C			F1200 (H) 5011353			ENGINE
RUN	COLOR	WIRE #	FROM	TERM NO.	TO	TERM NO.
1	BLACK	1110	MG1193:+	F015121K	MG1193:E	F021252

610 / 1 — 190 / 1

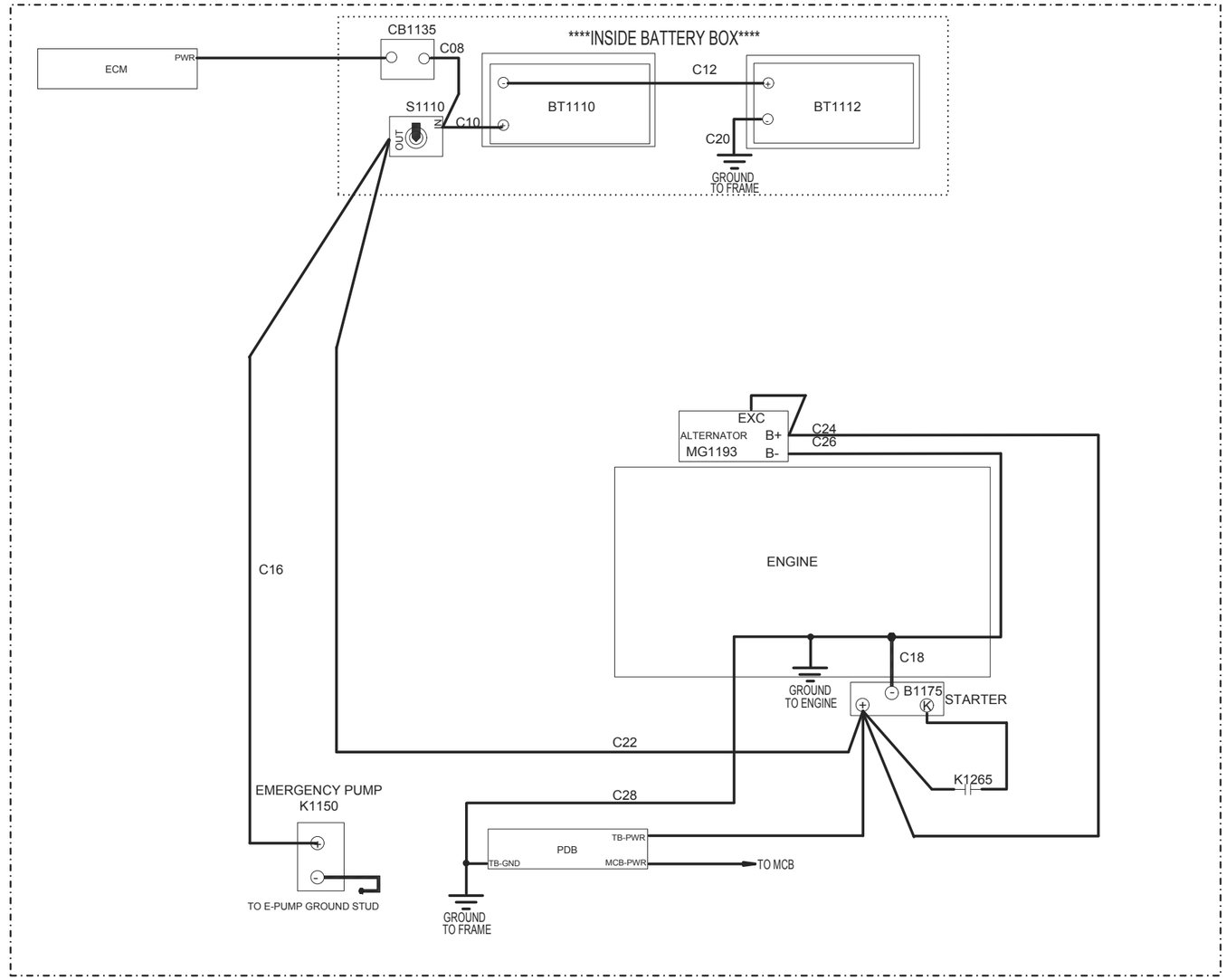

DETAIL "K"

GRID HEATER RELAY ENGINE			K1505 F012388			25FT ENGINE
RUN	COLOR	WIRE #	FROM	TERM NO.	TO	TERM NO.
1	BK	1500	K1505:+	-	E15126:OC40	-
2	WH	1505	K1505:-	-	E15126:OC42	-

550 / 2 — 150 / 2 — 490 / 25

ENGINE ECM POWER WIRING

860 / 2 — 870 / 2 — 880 / 20FT — 890 / 40FT — 900 / 1 — 910 / 4 — 920 / 1 — 930 / 20FT

ENGINE_POWER			WIRING CHART					
RUN	WIRE	SIZE	COLOR	FROM	TERM NO.	TO	TERM NO.	PART NO
1	000	12 AWG	Green	GND_ENG:GND	156647-4	J1463:2	A1333Y55	3413136
2	000	12 AWG	Green	GND_ENG:GND	156647-4	J1463:1	A1333Y55	3413136
3	1130	12 AWG	Red	CB1135:2	156647-4	J1463:4	A1333Y55	3413146
4	1130	12 AWG	Red	CB1135:2	156647-4	J1463:3	A1333Y55	3413146

RUN RED WIRE(S) TOGETHER IN LOOM FOR PROTECTON

CONFIDENTIAL

©COPYRIGHT 2011 HARSCO. THIS DRAWING OR DOCUMENT IS THE PROPERTY OF HARSCO AND EMBODIES CONFIDENTIAL INFORMATION, TRADE SECRET INFORMATION, AND/OR KNOW-HOW THAT IS THE PROPERTY OF HARSCO. BY ACCEPTING THIS DRAWING OR DOCUMENT, THE RECIPIENT AGREES (1) NOT TO PROVIDE, OR OTHERWISE MAKE AVAILABLE, THE DRAWING OR DOCUMENT, OR ANY INFORMATION OR KNOW-HOW EMBODIED THEREIN, TO ANY THIRD PARTY AND (2) NOT TO REPRODUCE OR USE THE DRAWING OR DOCUMENT TO MANUFACTURE ANY APPARATUS OR DEVICE, WITHOUT THE PRIOR WRITTEN AUTHORIZATION OF HARSCO.

CHANGE #		REVISION	DR	DATE
EC501059	A	NEW RELEASE	CJW	05/11
EC501131	B	ADDED LIGHTS TO BUGGY, NEW FJB	CJW	05/11
EC501418	C	UPDATE AS BUILT	CJW	06/11
EC501821	D	UPDATE AS BUILT	CJW	08/11
EC502003	E	UPDATE SHT 12, 13, 14 FOR DRONE KIT, CORRECT C08 ON SHT 15	CJW	09-22-11
EC502615	F	ADD ITEMS 860-930, ENGINE ECM WIRING SHEET 15	CJW	01-05-12
EC502851	G	UPDATED CABLE CHARTS FOR LT3250 & LT3270 ON SHEET 14	CJW	02-08-12
EC503310	H	SEE EC FOR CHANGE DETAIL	CJW	04-09-12

DRAWING TITLE/DESCRIPTION: INTERCONNECT WIRING High Current Wiring

MACHINE TYPE-MODEL: MARK IV

E3 PROJECT FILE NAME: MARK IV HD_10

SHEET NUMBER: 15

NUMBER OF JUPITER SHEETS: -

TOTAL NUMBER OF SHEETS: 15

DRAWN BY: CJW

REL. DATE: 05/11

SIZE: D

SCALE:

HARSCO RAIL

E3 DRAWING

5007958

PRODUCT STRUCTURE

	ITEM	PART #	QTY	PART DESCRIPTION	
	10	6104	2	TERMINAL, RING	: 5/16" RING, 8 AWG, INSULATED
	20	172164	3	RELAY, POWER	: SPNO 100A 24VDC COIL
	30	405590	1	DIN RAIL	: 14.5" DIN RAIL
	40	409760	2	TERMINAL, RING	: 5/16" RING, 4 AWG, NON-INSULATED
	50	3402461	5	TERMINAL BLOCK	: 2 CONDUCTOR #4 AWG - #4/0 AWG GREY
	60	3402462	2	TERMINAL BLOCK, JUMPER	: FOR 3402461 TERMINAL BLOCK
	70	3402469	3	TERMINAL BLOCK, AD	: 2 CONDUCTOR AWG 24-6 GREY ADAPTER
	80	3405992	1	WIRE DUCT	: WIRE DUCT W/COVER 2" X 2.9" X 6.56'
	90	3405993	1	WIRE DUCT	: WIRE DUCT W/COVER 3" X 2.9" X 6.56'
	100	3406649	15FT	WIRE	: 16AWG / GREEN, TYPE MTW
	110	3407028	5FT	WIRE	: 10AWG / RED, TYPE MTW
	120	3413146	40FT	WIRE	: 12AWG / RED, TYPE MTW
	130	4011819	90	TERMINAL BLOCK	: 20-10AWG, 4 CONDUCTOR, DIN RAIL, GRAY
	140	4011820	5	TERMINAL BLOCK, END PLATE	: FOR 4011819 TERMINAL BLOCK
	150	4011821	12	TERMINAL BLOCK, JUMPER	: JUMPER BAR FOR 2 TERMINAL BLOCKS 32A
	160	4011823	2	TERMINAL BLOCK, JUMPER	: JUMPER BAR FOR 4 TERMINAL BLOCKS 32A
	170	4011824	6	TERMINAL BLOCK, JUMPER	: JUMPER BAR FOR 5 TERMINAL BLOCKS 32A
	180	4011832	6	TERMINAL BLOCK	: 20-6AWG, 2 CONDUCTOR, DIN RAIL, GRAY
	190	4011833	6	TERMINAL BLOCK, END PLATE	: FOR 4011832 TERMINAL BLOCK
	200	4011838	8	TERMINAL BLOCK, JUMPER	: STEP-DOWN FOR 2 TERMINAL BLOCKS 57A
	210	4016767	0.96	DECAL	: TERMINAL BLOCK MARKER STRIP
	220	4019171	22	TAGS, CABLE	: PLASTIC CABLE TAG SLEEVE
	230	4029705	1	ENCLOSURE, MACHINED	: DRILLED PANEL FOR MARK IV (PDB)
	240	0-3212004-0-32	25FT	CABLE, SINGLE CONDUCTOR	: 4 AWG, BLACK 600V, WELDING CABLE
	250	A1278Y08	22	CABLE GRIP	: CABLE FROM: 0.200 - 0.300" 1/2" NPT 90°
	260	A1278Y10	8	CABLE GRIP	: CABLE FROM: 0.300 - 0.400" 1/2" NPT 90°
G	270	L420607	1	CABLE GRIP	: CABLE FROM: 0.400 - 0.500" 1/2" NPT 90°
	280				
	290	A1278Y18	2	CABLE GRIP	: CABLE FROM: 0.600-0.700" 1" NPT 90°
	300	A1563Y04	31	INSERT, THREADED	: #10X24 PLATED STEEL
	310	A9297Y03	10FT	WIRE	: 16 AWG - WHITE WIRE TYPE-SXL
	320	A9297Y05	5FT	WIRE	: 12 AWG - WHITE WIRE TYPE-SXL
	330	B0971T24	2	DIN RAIL	: 21.0" DIN RAIL
	340	B1382Y08	8	END CAP	: FOR SIEMENS BUS BAR
	350	B1382Y09	4	BUSS CONNECTOR	: FOR SIEMENS 80 AMP BUS BAR #12 UP TO #2 AWG
	360	C9678Y10	9	CIRCUIT BREAKER	: 15 AMP BREAKER DIN RAIL MOUNT
	370	C9678Y11	1	CIRCUIT BREAKER	: 20 AMP BREAKER DIN RAIL MOUNT
	380	C9678Y23	2	CIRCUIT BREAKER	: 8 AMP BREAKER DIN RAIL MOUNT
	390	C9678Y24	3	CIRCUIT BREAKER	: 125 AMP BREAKER DIN RAIL MOUNT
	400	C9678Y31	1	CIRCUIT BREAKER	: 1 AMP BREAKER DIN RAIL MOUNT
	410	D2892Y04	1	NAME PLATE	: PDB NAMEPLATE
	420	F001050	37	WASHER	: WROUGHT WASHER #10 (.190)
	430	F004320K	6	TERMINAL, RING	: #10 RING, 16-14 AWG, INSULATED
	440	F009594	37	SCREW	: #10-24X5/8 ROUND HEAD MACHINE SCREW ZP
	450				
	460	F011900	10FT	WIRE	: 8AWG / RED
	470	F012388	180FT	CABLE, MULTICONDUCTOR	: 16AWG/2 CONDUCTOR .405 O.D 13A/CONDUCTOR
	480	F015121K	2	TERMINAL, RING	: 5/16" RING, 6 AWG, INSULATED
	490	F016461K	3	TERMINAL, RING	: 5/16" RING, 12-10 AWG, INSULATED
	500	F016578	10	TY-RAP	: LARGE 7 5/16"
	510	F018029K	6	NUT	: #10-24 ELASTIC STOP NUT
	520	F018229	28	TY-RAP	: SMALL TY-RAP 3 1/2"
	530	F018249K	65FT	CABLE, MULTICONDUCTOR	: 16AWG/12 CONDUCTOR .76 O.D 7A/CONDUCTOR
	540	F018726	10FT	WIRE	: 2 AWG, BLACK
G	550	F019878	32	LOCK NUT	: 1/2" NUT
	560	F020177	12	HOLE SEAL	: MAX HOLE 7/8"
	570	F020241	10FT	WIRE	: 4AWG / RED
	580	F020242	20FT	WIRE	: 6AWG / BLACK
G	590				
	600	F020284	6	LOCK NUT	: FOR 1" CABLE GRIP
	610	F020697	5FT	WIRE	: 4 AWG/ BLACK
	620	F020984	10	TY-RAP MOUNT	: USED WITH TY-RAP
	630				
	640				
	650	F022258	0.5FT	SHRINK TUBING	: TUBING FOR DIODES/TRANSZORBS .12 I.D.
	660	F023518	6	END STOP	: SCREWED END STOP/CLIP
	670	F025837	37	WASHER	: LOCK WASHER #10
	680	F040134	64	DECAL	: COMPONENT LABEL
	690	F040174	2	DIODE	: 3A 200 PIV RECTIFIER
	700	F041270	6	END STOP	: END STOP FOR ALL DIN RAIL
	710	H4985Y02	2	BUSS BAR	: 5 SLOT CIRCUIT BREAKER BUSS BAR

PRODUCT STRUCTURE

ITEM	PART #	QTY	PART DESCRIPTION	
720	H4985Y10	2	BUSS BAR	: 2 SLOT CIRCUIT BREAKER BUSS BAR
730				
740				
750	F016189	35FT	CABLE, MULTICONDUCTOR	: 16AWG/4 CONDUCTOR .39 O.D 10A/CONDUCTOR
760	A1278Y20	4	CABLE GRIP	: CABLE FROM: .500-.600 1" NPTF; 90 DEG

NOTES

1. USE WAGO PEN TO MARK F040134 DECAL AND 4016767 DECAL PER DRAWING. APPLY AS SHOWN.
2. COVER NOT SHOWN IN ALL VIEWS FOR CLARITY.
3. APPLY TERMINALS USING RATCHET TYPE CRIMP TOOL.
4. USE F016578, F018229 TYRAPS AND F020984 TIE MOUNT AS REQUIRED TO BUNDLE WIRES SECURELY.
5. ROUTE WIRES PER DIAGRAM AND WIRE CHART. MAKE ALL CORNERS AS SQUARE AS POSSIBLE.
6. LABEL 4011819 AND 4011832 TERMINAL BLOCKS WITH 4016767 DECAL
7. MARK WIRES PER HTT W.I. 18525
8. DO NOT USE FERRULE TERMINALS WITH TERMINAL BLOCKS
9. USE F040134 DECAL TO LABEL CABLE GRIP HOLES ON INSIDE OF ENCLOSURE AS SHOWN.
10. ALL CABLE AND WIRE LENGTHS ARE IN FEET.

CONFIDENTIAL

©COPYRIGHT 2011 HARSCO. THIS DRAWING OR DOCUMENT IS THE PROPERTY OF HARSCO AND EMBODIES CONFIDENTIAL INFORMATION, TRADE SECRET INFORMATION, AND/OR KNOW-HOW THAT IS THE PROPERTY OF HARSCO. BY ACCEPTING THIS DRAWING OR DOCUMENT, THE RECIPIENT AGREES (1) NOT TO PROVIDE, OR OTHERWISE MAKE AVAILABLE, THE DRAWING OR DOCUMENT, OR ANY INFORMATION OR KNOW-HOW EMBODIED THEREIN, TO ANY THIRD PARTY AND (2) NOT TO REPRODUCE OR USE THE DRAWING OR DOCUMENT TO MANUFACTURE ANY APPARATUS OR DEVICE, WITHOUT THE PRIOR WRITTEN AUTHORIZATION OF HARSCO.

CHANGE #		REVISION	DR	DATE
EC501056	A	NEW RELEASE	CJW	05/11
EC501160	B	UPDATED CABLES FOR BUGGY TRAVEL LIGHTS	CJW	05/11
EC501405	C	UPDATE AS BUILT	CJW	06/11
EC501724	D	MODIFIED LAYOUT TO ACCEPT PERIMETER LIGHTS KIT	CJW	08/11
EC501821	E	UPDATE AS BUILT	CJW	08/11
EC502851	F	ITEM 50 WAS 4, ITEM 60 WAS 1, ADDED TB-GND1 TO SHT 5	CJW	02-08-12
EC503310	G	SEE EC FOR CHANGE DETAIL	CJW	04-09-12

DRAWING TITLE/DESCRIPTION:
PDB ASSEMBLY
Bill Of Material

MACHINE TYPE-MODEL:
MARK IV

E3 PROJECT FILE NAME:
MARK IV HD_10

SHEET NUMBER: 1
NUMBER OF JUPITER SHEETS: 0
TOTAL NUMBER OF SHEETS: 6

DRAWN BY: CJW
REL. DATE: 05/11
SIZE: D
SCALE:

HARSCO RAIL

E3 DRAWING
5007952

WIRING CHART

RUN	WIRE	SIZE	COLOR	FROM	TERM NO.	TO	TERM NO.	PART NO
1	1110	2 AWG	Black	CB1120:1	-	TB-PWR1:1	-	F018726
2	1110	2 AWG	Black	CB1130:1	-	TB-PWR2:2	-	F018726
3	1110	2 AWG	Black	CB1450:1	-	TB-PWR2:2	-	F018726
4	1132	2 AWG	Black	CB1120:2	-	TB-PWR3:3	-	F018726
5	000	4 AWG	Black	K1304:2	409760	TB-GND1:1	-	F020697
6	000	6 AWG	Black	TB31:10	-	TB31:1	-	F020242
7	000	6 AWG	Black	TB-GND1A:1	-	TB31:20	-	F020242
8	000	6 AWG	Black	TB31:1	-	TB-GND1A:1	-	F020242
9	000W	6 AWG	Black	K1304:1	F015121K	TB32:1	-	F020242
10	000W	6 AWG	Black	TB32:10	-	TB32:1	-	F020242
11	000W	6 AWG	Black	K1304:1	F0015121K	TB32:21	-	F020242
12	000	16 AWG	Green	K2180:-	F004320K	TB31:4	-	3406649
13	000	16 AWG	Green	K1295:-	F004320K	TB31:3	-	3406649
14	000	16 AWG	Green	K1304:-	F004320K	TB31:3	-	3406649
15	1110	10 AWG	Red	CB1460:1	-	TB-PWR2A:2	-	3407028
16	1132	10 AWG	Red	W4A:1	-	TB-PWR3A:3	-	3407028
17	4450	10 AWG	Red	K1295:2	F016461K	W3A:1	-	3407028
18	1260	12 AWG	Red	K2180:1	F016461K	TB30:10	-	3413146
19	2600	12 AWG	Red	CB2600:2	-	TB30:10	-	3413146
20	1460	12 AWG	Red	CB1460:2	-	TB30:18	-	3413146
21	4452	12 AWG	Red	CB4450:2	-	TB30:20	-	3413146
22	4460	12 AWG	Red	CB4460:2	-	TB30:22	-	3413146
23	4470	12 AWG	Red	CB4470:2	-	TB30:24	-	3413146
24	4480	12 AWG	Red	CB4480:2	-	TB30:26	-	3413146
25	4490	12 AWG	Red	CB4490:2	-	TB30:28	-	3413146
26	4500	12 AWG	Red	CB4500:2	-	TB30:30	-	3413146
27	4510	12 AWG	Red	CB4510:2	-	TB30:32	-	3413146
28	4520	12 AWG	Red	CB4520:2	-	TB30:34	-	3413146
29	4530	12 AWG	Red	CB4530:2	-	TB30:35	-	3413146
30	4540	12 AWG	Red	CB4540:2	-	TB30:37	-	3413146
31	6120	12 AWG	Red	CB6120:2	-	TB30:49	-	3413146
32	1132	4 AWG	Red	K1295:1	409760	TB-PWR3A:3	-	F020241
33	4450	8 AWG	Red	K1295:2	6104	W2A:1	-	F011900
34	4450	8 AWG	Red	K1295:2	6104	W1A:1	-	F011900
35	2590	12 AWG	White	K2180:2	F016461K	TB30:12	-	3413135
36	1295	16 AWG	White	K1304:+	F004320K	TB30:5	-	3407024
37	1295	16 AWG	White	K1295:+	F004320K	TB30:5	-	3407024
38	2180	16 AWG	White	K2180:+	F004320K	TB30:7	-	3407024
39	3485	12 AWG	Red	CB4550:2	-	TB30:50	-	3413146
40	4560	12 AWG	Red	CB4560:2	-	TB30:51	-	3413146

430 / 6	480 / 2	490 / 3
40 / 2	10 / 2	

JUMPER CHART

RUN	FROM	TO	PART NO.
1	TB30:10	TB30:11	4011821
2	TB30:12	TB30:13	4011821
3	TB30:20	TB30:21	4011821
4	TB30:22	TB30:23	4011821
5	TB30:24	TB30:25	4011821
6	TB30:26	TB30:27	4011821
7	TB30:28	TB30:29	4011821
8	TB30:30	TB30:31	4011821
9	TB30:32	TB30:33	4011821
10	TB30:35	TB30:36	4011821
11	TB30:37	TB30:38	4011821
12	TB31:1	TB31:2	4011838
13	TB31:2	TB31:6	4011824
14	TB31:6	TB31:9	4011823
15	TB31:10	TB31:9	4011838
16	TB31:10	TB31:11	4011838
17	TB31:11	TB31:15	4011824
18	TB31:15	TB31:19	4011824
19	TB31:19	TB31:20	4011838
20	TB32:1	TB32:2	4011838
21	TB32:2	TB32:6	4011824
22	TB32:6	TB32:9	4011823
23	TB32:10	TB32:9	4011838
24	TB32:10	TB32:11	4011838
25	TB32:11	TB32:15	4011824
26	TB32:15	TB32:19	4011824
27	TB32:19	TB32:20	4011821
28	TB32:20	TB32:21	4011838

150 / 12	160 / 2	170 / 6	200 / 8

DIODE CHART

RUN	DEVICE	FROM	TO	PART NO.
1	CR1305	K1305:+	K1305:-	F040174
2	CR2180	K2180:+	K2180:-	F040174

650 / .5	690 / 2

CONFIDENTIAL

©COPYRIGHT 2011 HARSCO. THIS DRAWING OR DOCUMENT IS THE PROPERTY OF HARSCO AND EMBODIES CONFIDENTIAL INFORMATION, TRADE SECRET INFORMATION, AND/OR KNOW-HOW THAT IS THE PROPERTY OF HARSCO. BY ACCEPTING THIS DRAWING OR DOCUMENT, THE RECIPIENT AGREES (1) NOT TO PROVIDE, OR OTHERWISE MAKE AVAILABLE, THE DRAWING OR DOCUMENT, OR ANY INFORMATION OR KNOW-HOW EMBODIED THEREIN, TO ANY THIRD PARTY AND (2) NOT TO REPRODUCE OR USE THE DRAWING OR DOCUMENT TO MANUFACTURE ANY APPARATUS OR DEVICE, WITHOUT THE PRIOR WRITTEN AUTHORIZATION OF HARSCO.

CHANGE #		REVISION	DR	DATE
EC501056	A	NEW RELEASE	CJW	05/11
EC501160	B	UPDATED CABLES FOR BUGGY TRAVEL LIGHTS	CJW	05/11
EC501405	C	UPDATE AS BUILT	CJW	06/11
EC501724	D	MODIFIED LAYOUT TO ACCEPT PERIMETER LIGHTS KIT	CJW	08/11
EC501821	E	UPDATE AS BUILT	CJW	08/11
EC502851	F	ITEM 50 WAS 4, ITEM 60 WAS 1, ADDED TB-GND1 TO SHT 5	CJW	02-08-12
EC503310	G	SEE EC FOR CHANGE DETAIL	CJW	04-09-12

DRAWING TITLE/DESCRIPTION:
PDB ASSEMBLY
Wiring

MACHINE TYPE-MODEL:
MARK IV

E3 PROJECT FILE NAME:
MARK IV HD_10

SHEET NUMBER: 2
NUMBER OF JUPITER SHEETS: 0
TOTAL NUMBER OF SHEETS: 6

DRAWN BY: CJW
REL. DATE: 05/11
SIZE: D
SCALE:

HARSCO RAIL

E3 DRAWING

5007952

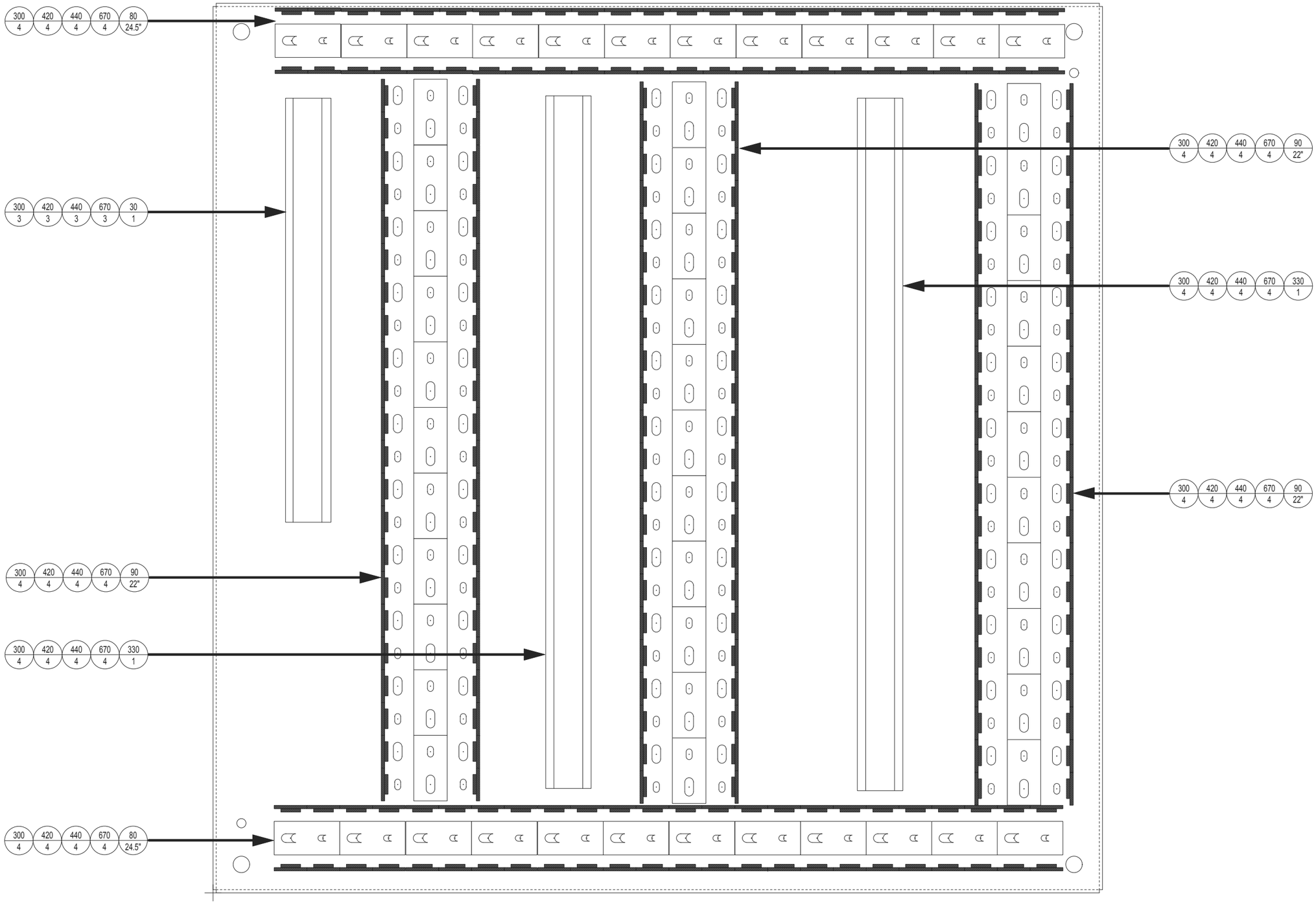

CONFIDENTIAL

©COPYRIGHT 2011 HARSCO. THIS DRAWING OR DOCUMENT IS THE PROPERTY OF HARSCO AND EMBODIES CONFIDENTIAL INFORMATION, TRADE SECRET INFORMATION, AND/OR KNOW-HOW THAT IS THE PROPERTY OF HARSCO. BY ACCEPTING THIS DRAWING OR DOCUMENT, THE RECIPIENT AGREES (1) NOT TO PROVIDE, OR OTHERWISE MAKE AVAILABLE, THE DRAWING OR DOCUMENT, OR ANY INFORMATION OR KNOW-HOW EMBODIED THEREIN, TO ANY THIRD PARTY AND (2) NOT TO REPRODUCE OR USE THE DRAWING OR DOCUMENT TO MANUFACTURE ANY APPARATUS OR DEVICE, WITHOUT THE PRIOR WRITTEN AUTHORIZATION OF HARSCO.

CHANGE #		REVISION	DR	DATE
EC501056	A	NEW RELEASE	CJW	05/11
EC501160	B	UPDATED CABLES FOR BUGGY TRAVEL LIGHTS	CJW	05/11
EC501405	C	UPDATE AS BUILT	CJW	06/11
EC501724	D	MODIFIED LAYOUT TO ACCEPT PERIMETER LIGHTS KIT	CJW	08/11
EC501821	E	UPDATE AS BUILT	CJW	08/11
EC502851	F	ITEM 50 WAS 4, ITEM 60 WAS 1, ADDED TB-GND1 TO SHT 5	CJW	02-08-12
EC503310	G	SEE EC FOR CHANGE DETAIL	CJW	04-09-12

DRAWING TITLE/DESCRIPTION:
PDB ASSEMBLY
Assembly

MACHINE TYPE-MODEL:
MARK IV

E3 PROJECT FILE NAME:
MARK IV HD_10

SHEET NUMBER: 3
NUMBER OF JUPITER SHEETS: 0
TOTAL NUMBER OF SHEETS: 6

DRAWN BY: CJW
REL. DATE: 05/11
SIZE: D
SCALE:

HARSCO RAIL

E3 DRAWING

5007952

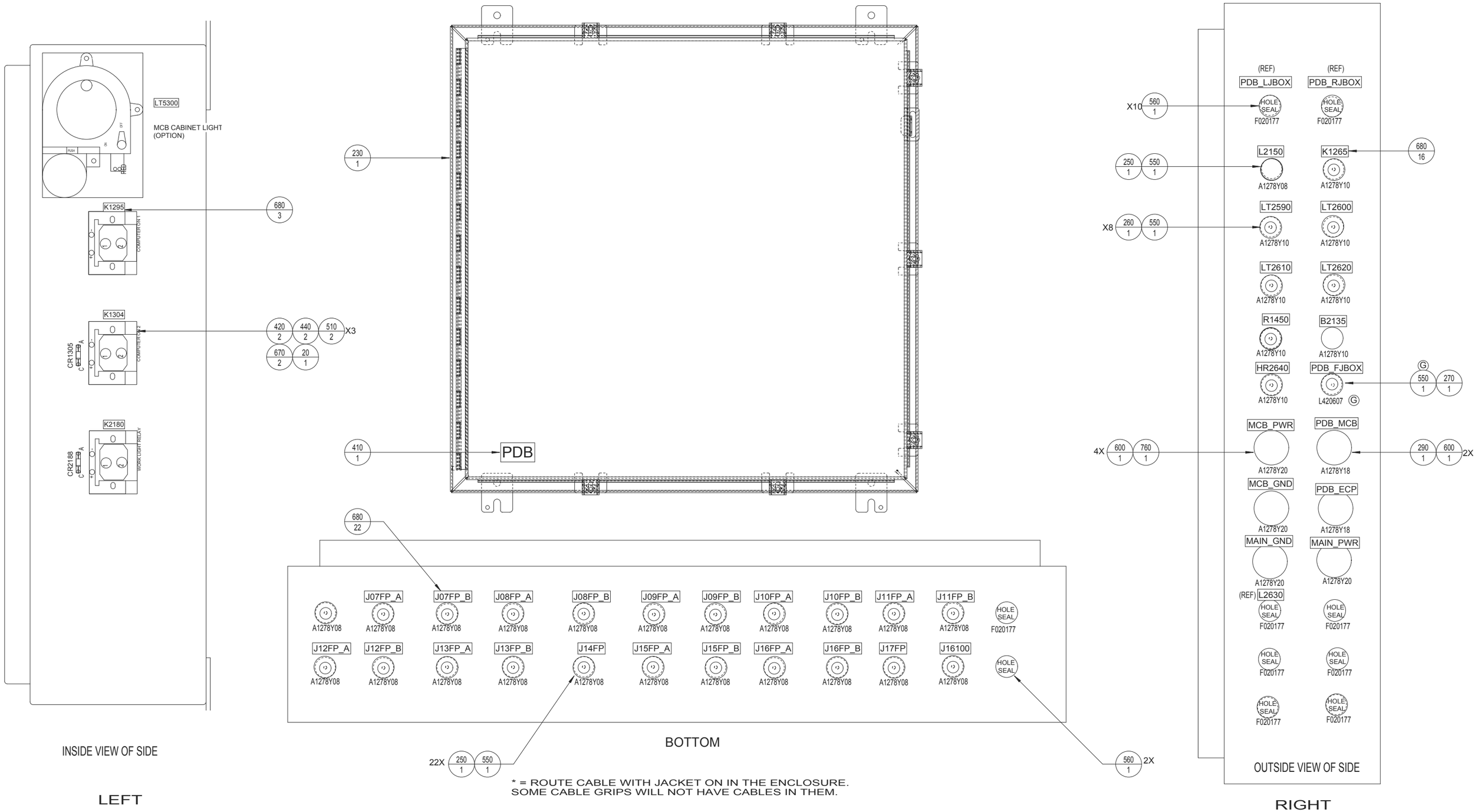

CONFIDENTIAL

©COPYRIGHT 2011 HARSCO. THIS DRAWING OR DOCUMENT IS THE PROPERTY OF HARSCO AND EMBODIES CONFIDENTIAL INFORMATION, TRADE SECRET INFORMATION, AND/OR KNOW-HOW THAT IS THE PROPERTY OF HARSCO. BY ACCEPTING THIS DRAWING OR DOCUMENT, THE RECIPIENT AGREES (1) NOT TO PROVIDE, OR OTHERWISE MAKE AVAILABLE, THE DRAWING OR DOCUMENT, OR ANY INFORMATION OR KNOW-HOW EMBODIED THEREIN, TO ANY THIRD PARTY AND (2) NOT TO REPRODUCE OR USE THE DRAWING OR DOCUMENT TO MANUFACTURE ANY APPARATUS OR DEVICE, WITHOUT THE PRIOR WRITTEN AUTHORIZATION OF HARSCO.

CHANGE #		REVISION	DR	DATE
EC501056	A	NEW RELEASE	CJW	05/11
EC501160	B	UPDATED CABLES FOR BUGGY TRAVEL LIGHTS	CJW	05/11
EC501405	C	UPDATE AS BUILT	CJW	06/11
EC501724	D	MODIFIED LAYOUT TO ACCEPT PERIMETER LIGHTS KIT	CJW	08/11
EC501821	E	UPDATE AS BUILT	CJW	08/11
EC502851	F	ITEM 50 WAS 4, ITEM 60 WAS 1, ADDED TB-GND1 TO SHT 5	CJW	02-08-12
EC503310	G	SEE EC FOR CHANGE DETAIL	CJW	04-09-12

DRAWING TITLE/DESCRIPTION: PDB ASSEMBLY Assembly

MACHINE TYPE-MODEL: MARK IV

E3 PROJECT FILE NAME: MARK IV HD_10

SHEET NUMBER: 4

NUMBER OF JUPITER SHEETS: 0

TOTAL NUMBER OF SHEETS: 6

DRAWN BY: CJW

REL. DATE: 05/11

SIZE: D

SCALE:

HARSCO RAIL

E3 DRAWING

5007952

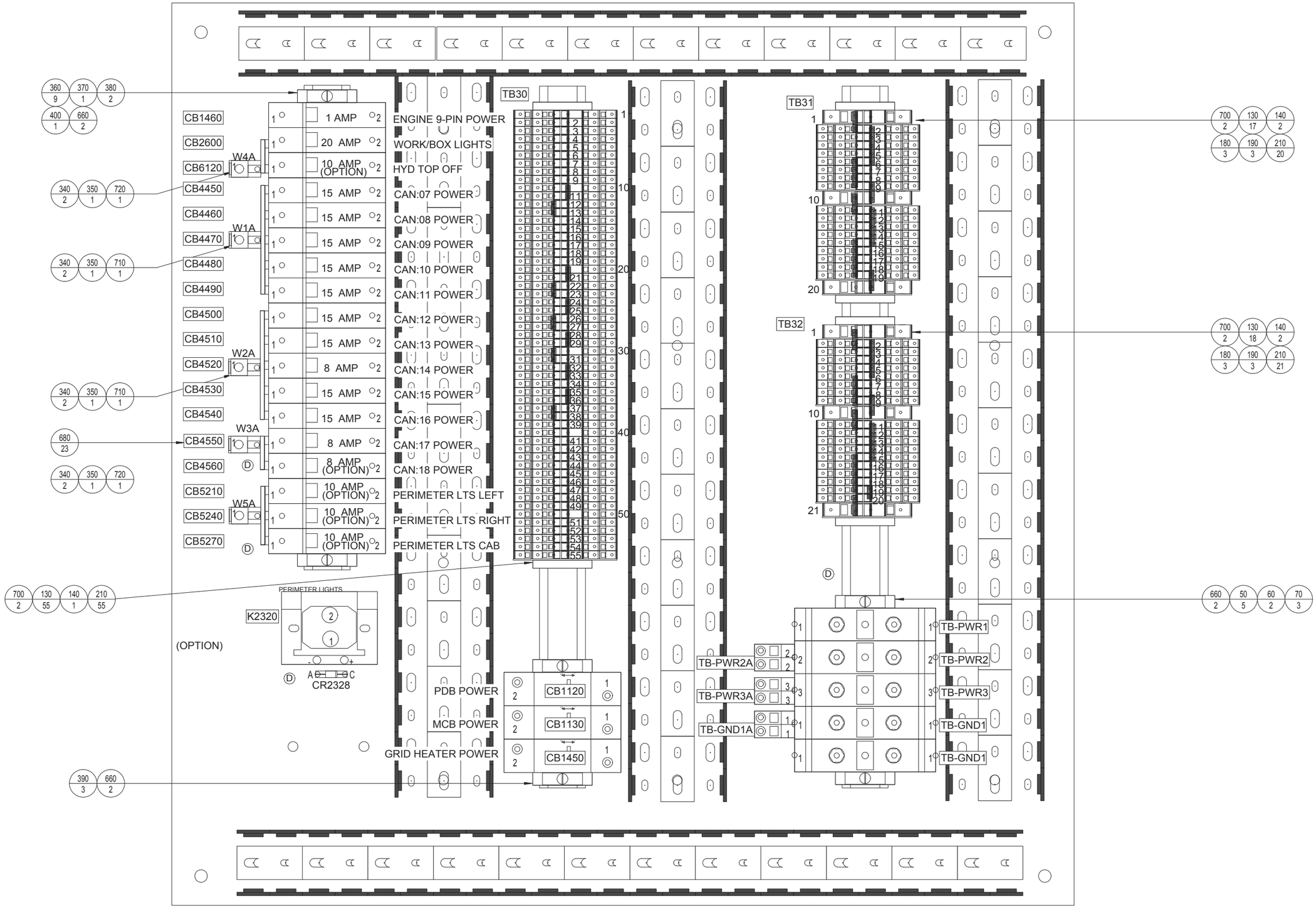

CONFIDENTIAL

©COPYRIGHT 2011 HARSCO. THIS DRAWING OR DOCUMENT IS THE PROPERTY OF HARSCO AND EMBODIES CONFIDENTIAL INFORMATION, TRADE SECRET INFORMATION, AND/OR KNOW-HOW THAT IS THE PROPERTY OF HARSCO. BY ACCEPTING THIS DRAWING OR DOCUMENT, THE RECIPIENT AGREES (1) NOT TO PROVIDE, OR OTHERWISE MAKE AVAILABLE, THE DRAWING OR DOCUMENT, OR ANY INFORMATION OR KNOW-HOW EMBODIED THEREIN, TO ANY THIRD PARTY AND (2) NOT TO REPRODUCE OR USE THE DRAWING OR DOCUMENT TO MANUFACTURE ANY APPARATUS OR DEVICE, WITHOUT THE PRIOR WRITTEN AUTHORIZATION OF HARSCO.

CHANGE #		REVISION	DR	DATE
EC501056	A	NEW RELEASE	CJW	05/11
EC501160	B	UPDATED CABLES FOR BUGGY TRAVEL LIGHTS	CJW	05/11
EC501405	C	UPDATE AS BUILT	CJW	06/11
EC501724	D	MODIFIED LAYOUT TO ACCEPT PERIMETER LIGHTS KIT	CJW	08/11
EC501821	E	UPDATE AS BUILT	CJW	08/11
EC502851	F	ITEM 50 WAS 4, ITEM 60 WAS 1, ADDED TB-GND1 TO SHT 5	CJW	02-08-12
EC503310	G	SEE EC FOR CHANGE DETAIL	CJW	04-09-12

DRAWING TITLE/DESCRIPTION:
PDB ASSEMBLY
Assembly

MACHINE TYPE-MODEL:
MARK IV

E3 PROJECT FILE NAME:
MARK IV HD_10

SHEET NUMBER: 5
NUMBER OF JUPITER SHEETS: 0
TOTAL NUMBER OF SHEETS: 6

DRAWN BY: CJW
REL. DATE: 05/11
SIZE: D
SCALE:

HARSCO RAIL

E3 DRAWING

5007952

-- PDB ASSEMBLY CABLES --

GRID HEATER POWER — R1450 — 25FT
PDB — 0-3212004-0-32 — ENGINE

520 2 / 220 2 / 240 25

RUN	COLOR	WIRE #	FROM	TERM NO.	TO	TERM NO.
1	BK	1450	CB1450:2	-	K1505:1	-

RUN CABLE IN SPLIT LOOM FOR PROTECTION

STARTER SLAVE RELAY 1 — K1265 — 25FT
PDB — F012388 — ENGINE

520 2 / 220 2 / 470 25

RUN	COLOR	WIRE #	FROM	TERM NO.	TO	TERM NO.
1	BK	000	TB31:2	-	K1265:-	-
2	WH	1268	TB30:4	-	K1265:+	-

RUN CABLE IN SPLIT LOOM FOR PROTECTION

WORK LIGHTS — LT2590 — 40FT
PDB — F012388 — I/C

520 2 / 220 2 / 470 40

RUN	COLOR	WIRE #	FROM	TERM NO.	TO	TERM NO.
1	BK	000	TB31:5	-	LT2590:-	-
2	WH	2605	TB30:12	-	LT2590:+	-

WORK LIGHTS — LT2600 — 45FT
PDB — F012388 — I/C

520 2 / 220 2 / 470 45

RUN	COLOR	WIRE #	FROM	TERM NO.	TO	TERM NO.
1	BK	000	TB31:5	-	LT2600:-	-
2	WH	2605	TB30:12	-	LT2600:+	-

WORK LIGHTS — LT2610 — 25FT
PDB — F012388 — I/C

520 2 / 220 2 / 470 25

RUN	COLOR	WIRE #	FROM	TERM NO.	TO	TERM NO.
1	BK	000	TB31:6	-	LT2610:-	-
2	WH	2605	TB30:13	-	LT2610:+	-

WORK LIGHTS — LT2620 — 25FT
PDB — F012388 — I/C

520 2 / 220 2 / 470 25

RUN	COLOR	WIRE #	FROM	TERM NO.	TO	TERM NO.
1	BK	000	TB31:6	-	LT2620:-	-
2	WH	2605	TB30:13	-	LT2620:+	-

AIR DRYER POWER — HR2640 — 20FT
PDB — F012388 — AIR DRYER

520 2 / 220 2 / 470 20

RUN	COLOR	WIRE #	FROM	TERM NO.	TO	TERM NO.
1	BK	000	TB31:7	-	HR2640:B	-
2	WH	2600	TB30:11	-	HR2640:A	-

PDB TO ECP CABLE — PDB_ECP — 25FT
PDB — F018249K — ECP

520 2 / 220 2 / 530 25

RUN	COLOR	WIRE #	FROM	TERM NO.	TO	TERM NO.
1	BK	000A	TB30:1	-	TB10:6	-
2	WH	000B	TB30:2	-	TB10:7	-
3	RD	000C	TB30:3	-	TB10:8	-
4	GN	2180	TB30:7	-	TB10:15	-
5	OR	2210	TB30:8	-	TB10:16	-
6	BU	2320	TB30:9	-	TB10:21	-
7	WH/BK	000	TB31:4	-	TB10:36	-
8	GN/BK	1295	TB30:5	-	TB10:10	-
9	OR/BK	1268	TB30:4	-	TB10:32	-
10	BU/BK	**NC**	-	-	-	-
11	RD/BK	**NC**	-	-	-	-
12	BK/WH	**NC**	-	-	-	-

PDB TO FRONT JB — PDB_FJBOX — 35FT
PDB — F016189 — FRONT JBOX

520 2 / 220 2 / 750 35

RUN	COLOR	WIRE #	FROM	TERM NO.	TO	TERM NO.
1	BK	3177	TB30:16	-	TB20:2	-
2	WH	3220	TB30:17	-	TB20:1	-
3	RD	000	TB31:9	-	TB20:3	-
4	GN	**NC**	-	-	-	-

PDB TO MCB CABLE — PDB_MCB — 40FT
PDB — F018249K — MCB

520 2 / 220 2 / 530 40

RUN	COLOR	WIRE #	FROM	TERM NO.	TO	TERM NO.
1	BK	**NC**	-	-	-	-
2	WH	5270	TB30:47	-	TB1:31	-
3	RD	1335	TB30:6	-	TB1:12	-
4	GN	3177	TB30:16	-	TB1:28	-
5	OR	3220	TB30:17	-	TB1:30	-
6	BU	**NC**	-	-	-	-
7	WH/BK	2135	TB30:39	-	TB1:14	-
8	GN/BK	**NC**	-	-	-	-
9	OR/BK	**NC**	-	-	-	-
10	BU/BK	**NC**	-	-	-	-
11	RD/BK	2145	TB30:19	-	TB1:15	-
12	BK/WH	**NC**	-	-	-	-

CONFIDENTIAL

©COPYRIGHT 2011 HARSCO. THIS DRAWING OR DOCUMENT IS THE PROPERTY OF HARSCO AND EMBODIES CONFIDENTIAL INFORMATION, TRADE SECRET INFORMATION, AND/OR KNOW-HOW THAT IS THE PROPERTY OF HARSCO. BY ACCEPTING THIS DRAWING OR DOCUMENT, THE RECIPIENT AGREES (1) NOT TO PROVIDE, OR OTHERWISE MAKE AVAILABLE, THE DRAWING OR DOCUMENT, OR ANY INFORMATION OR KNOW-HOW EMBODIED THEREIN, TO ANY THIRD PARTY AND (2) NOT TO REPRODUCE OR USE THE DRAWING OR DOCUMENT TO MANUFACTURE ANY APPARATUS OR DEVICE, WITHOUT THE PRIOR WRITTEN AUTHORIZATION OF HARSCO.

CHANGE #		REVISION	DR	DATE
EC501056	A	NEW RELEASE	CJW	05/11
EC501160	B	UPDATED CABLES FOR BUGGY TRAVEL LIGHTS	CJW	05/11
EC501405	C	UPDATE AS BUILT	CJW	06/11
EC501724	D	MODIFIED LAYOUT TO ACCEPT PERIMETER LIGHTS KIT	CJW	08/11
EC501821	E	UPDATE AS BUILT	CJW	08/11
EC502851	F	ITEM 50 WAS 4, ITEM 60 WAS 1, ADDED TB-GND1 TO SHT 5	CJW	02-08-12
EC503310	G	SEE EC FOR CHANGE DETAIL	CJW	04-09-12

DRAWING TITLE/DESCRIPTION: PDB ASSEMBLY Cable Chart

MACHINE TYPE-MODEL: MARK IV

E3 PROJECT FILE NAME: MARK IV HD_10

SHEET NUMBER: 6

NUMBER OF JUPITER SHEETS: 0

TOTAL NUMBER OF SHEETS: 6

DRAWN BY: CJW

REL. DATE: 05/11

SIZE: D

SCALE:

HARSCO RAIL

E3 DRAWING

5007952

ENG.DWG.NO.
H6204YAA

REVISIONS							
NO	ER	DESCRIPTION	ZONE	DR	CK	APP	MF

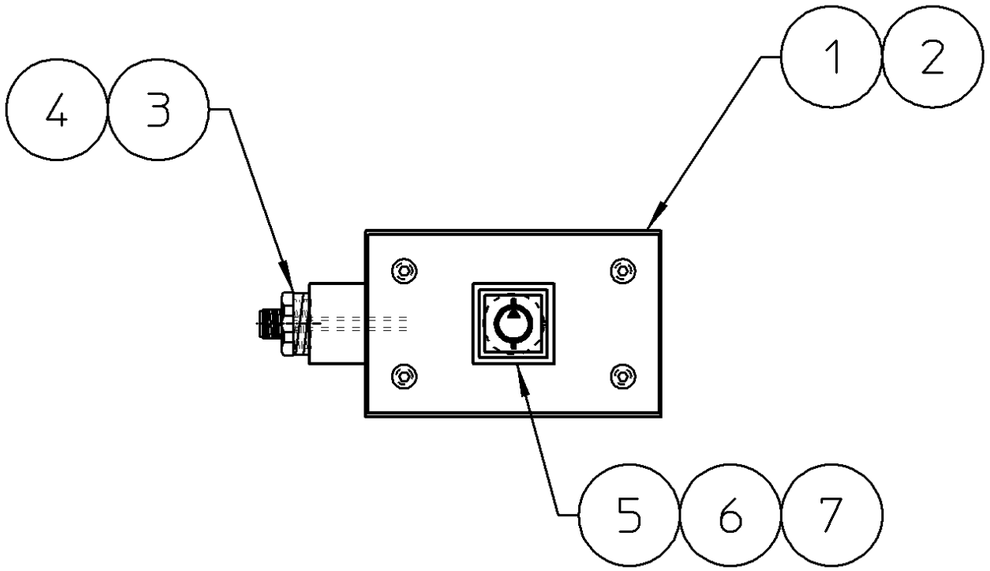

NOTE:
USE BLUE LOCTITE, P/N, 0-3040000-0-06,
ON ITEMS 3 & 4 WHEN INSTALLING IN BOX.

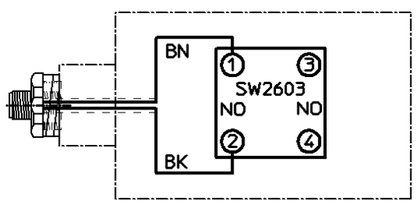

MANUAL PUMP SWITCH WIRING

FIG NO.	ITEM NO.	PART NUMBER	DESCRIPTION AND MATERIAL SIZE (REF.ONLY)	QTY	
	7	D3544Y11	FILM INSERT, PUMP	1	
	6	A0653Y01	CONTACT BLOCK	1	
	5	A0655Y02	PUSHBUTTON	1	
	4	185639	RECEPTACLE 4 PIN M12	1	
	3	0-3262007-0-11	REDUCING BUSH. 3/4-1/2	1	
	2	C8578Y01	BOX COVER REWORK	1	
	1	C8568Y01	ELEC. BOX REWORK	1	

IMPLIED TOLERANCES
ALL DIMENSIONS ARE IN INCHES-TOLERANCE UNLESS OTHERWISE SPECIFIED

NOMINAL SIZE RANGE		PLUS OR MINUS			NOMINAL SIZE RANGE		PLUS OR MINUS		
OVER	TO	FRACTION	2 PLACE DECIMAL	3 PLACE DECIMAL	OVER	TO	FRACTION	2 PLACE DECIMAL	3 PLACE DECIMAL
-	1	1/64	.01	.003	6	24	3/64	.03	.008
1	6	1/32	.02	.005	24	-	1/16	.05	.010

AUGULAR DIMENSIONS PLUS OR MINUS 1 DEGREE

√ ALL MACHINED SURFACES TO HAVE A SURFACE FINISH OF 125 MICROINCHES UNLESS OTHERWISE SPECIFED.

WEIGHT lbs.

3rd ANGLE PROJECTION

DO NOT SCALE

WELDING SPECIFICATION
UNLESS OTHERWISE SPECIFIED ALL WELDS SHOULD ADHERE TO FAIRMONT TAMPER WELDING SPECIFICATION 101

DESCRIPTION (24)
MANUAL PUMP BOX ASSY

DRAWN PJG	DATE 10-01-02	MACHINE TYPE MK IV JUPITER
CHECKED JOC	DATE 10-07-02	
APP-ENG JOC	DATE 10-07-02	
SHEET 1	CONT. ON —	
LAST ECR. 12548 .4	CHECKED dvan DATE 9-Oct-02	ENG.DWG.NO. H6204YAA

Fairmont Tamper™
2401 Edmund Road-Box 20
Cayce-West Columbia,
South Carolina 29171-0020
(803) 822-9160

SCALE=10

PRODUCT STRUCTURE

	ITEM	PART #	QTY	PART DESCRIPTION	
	10	174287	2	LIGHT, HEAD LIGHT	: 24V 60W TRAPEZOID BEAM
	20	187919	1	CABLE ASSEMBLY, DB9	: DB9 MALE/FEMALE 3 FOOT CABLE ASSY
B	30	410378	REF	CABLE ASSEMBLY, DB15	: VGA CABLE 6FT MALE/MALE DB15 HD
	40	413457	12	VELCRO	: SELF LOCK MUSHROOM-HEAD FASTENER 1" WIDE
	50	2013432	1	KEYBOARD	: 83-KEY KEYBOARD (101 KEY FUNCTIONALITY)
	60	3407024	100FT	WIRE	: 16AWG / WHITE, TYPE MTW
	70	4014750	2	LIGHT, TAIL LIGHT	: BRAKE & TAIL LIGHT LED 24VDC
	80	4014763	2	GROMMET	: 4 INCH FOR ROUND LIGHT
	90	4014765	2	CONNECTOR	: 3-WIRE PIGTAIL DOUBLE CONTACT
	100	4015040	1	MONITOR	: LCD PANEL 17" COLOR TFT ACTIVE MATRIX SXGA
	110	4015041	1	KIT, MONITOR MOUNTING	: MONITOR MOUNTING KIT
	120	4015064	1	STAND, MONITOR	: MONITOR MOUNT STAND
	130	4015854	1	MODULE, PROCESSOR	: JAM BOX, G4
B	140	4019171	18	TAGS, CABLE	: PLASTIC CABLE TAG SLEEVE
B	150	4022348	REF	CABLE ASSEMBLY, M12	: 5 M W/M12 MALE + DIN-A STYLE +DIODE
	160	4022695	1	MODULE, OSCILLATOR	: JUPITER OSCILLATOR TERMINALS & DB9 CONNECTOR
	170	5007951	1	ENCLOSURE ASSEMBLY	: MARK IV MCB PANEL ASSEMBLY
	180	5007953	1	ENCLOSURE ASSEMBLY	: MARK IV PDB ASSEMBLY
	190	5007954	REF	ENCLOSURE ASSEMBLY	: LEFT ARMREST ASSEMBLY
	200	5007955	REF	ENCLOSURE ASSEMBLY	: RIGHT ARMREST ASSEMBLY
	210	701113018	10FT	CABLE, MULTICONDUCTOR	: 18AWG/2 CONDUCTOR 10A/CONDUCTOR .31 O.D
	220	0-1405820-0-01	REF	MOLDING, TRIM	: TRIM MOLDING
	230	0-2301261-0-01	1	LIGHT, DOME	: 24VDC CASE GROUNDED W/ SWITCH
D	240				
B	250	0-3212004-0-47	23FT	CABLE, MULTICONDUCTOR	: 10AWG/5 CONDUCTOR .770 O.D 25A/CONDUCTOR
	260	0-3502003-0-02	1	WIPER BLADE	: FLAT WIPER BLADE
	270	0-3502003-0-08	1	WIPER BLADE	: FLAT WIPER BLADE
	280	0-3502007-0-02	2	MOTOR, WIPER	: WINDSHIELD WIPER MOTOR
	290	0-3502050-0-01	2	WIPER ARM	: ADJUSTABLE 12 1/2 TO 18" WIPER ARM
	300	A0061008	4	WASHER	: 1/4" LOCK WASHER
	310	A1563Y05	5	INSERT, THREADED	: #10X32 PLATED STEEL
	320	A1787Y24	1	POWER INVERTER	: 24VDC TO 120AC @ 5.1 A
	330	A2197Y09	2	LIGHT, SPOT LIGHT	: 24V MARINE SPOT LIGHT
B	340	F041270	2	END STOP	: END STOP FOR ALL DIN RAIL
	350	B0971T29	1	DIN RAIL	: 5" DIN RAIL
B	360	B1623Y01	10FT	CONDUIT, CORRUGATED	: 1/4" CORRUGATED CONDUIT
	370	B1623Y03	10FT	CONDUIT, CORRUGATED	: 1/2" CORRUGATED CONDUIT
D	380	B1623Y13	8	CONDUIT, CORRUGATED	: CORRUGATED LOOM TEE
B	390	B1623Y14	1FT	CONDUIT, CORRUGATED	: 1/2" CORRUGATED CONDUIT
	400				
	410	B5532Y11	29	SCREW	: 1/4-20 X 3/4" SCREW W/ BLACK WASHER
	420	F001050	12	WASHER	: WROUGHT WASHER #10 (.190)
	430	F003067	4	SCREW	: 1/4-20X5/8 HEX HEAD CAP SCREW GR5 ZP
	440	F007413	3	WASHER	: SAE RGLR LOCK WASHER #6(.138) ZP
	450	F009542	10	NUT	: #10-24 HEX MS NUT (.190) GR2 ZP
	460	F009591	16	SCREW	: #10-24X3/4 ROUND HEAD MACHINE SCREW ZP
	470	F009718	3	SCREW	: #6-32X1/2 ROUND HEAD MACHINE SCREW ZP
	480	F009857	2	SCREW	: RD HD MS #10-24X1 1/2
	490	F009863	20	TERMINAL, BUTT	: BUTT CONNECTER, 16-14AWG
	500	F010502	2	SCREW	: #10-24X1/2 ROUND HEAD MACHINE SCREW ZP
	510	F015922	6	NUT	: 3/8-16 ELASTIC STOP NUT
	520	F016461K	2	TERMINAL, RING	: 5/16" RING, 12-10 AWG, INSULATED
	530	F016578	30	TY-RAP	: LARGE 7 5/16"
	540	F016656	30	TY-RAP	: EX-LARGE 13 3/8"
	550	F016765	2	SCREW	: SLTD RH MS #10-32 X 3/4 ZP
D	560	F018029K	18	NUT	: #10-24 ELASTIC STOP NUT
B	570	F018229	18	TY-RAP	: SMALL TY-RAP 3 1/2"
B	580	F018248K	23FT	CABLE, MULTICONDUCTOR	: 16AWG/20 CONDUCTOR .86 O.D 7A/CONDUCTOR
	590	F020984	20	TY-RAP MOUNT	: USED WITH TY-RAP
B	600	F018250	10FT	CABLE, MULTICONDUCTOR	: 12AWG/2 CONDUCTOR .78 O.D 25A/CONDUCTOR
	610	F025837	20	WASHER	: LOCK WASHER #10
	620	F040161	100FT	WIRE	: 16AWG / WHITE
	630	G3464Y01	2	SPACER	: 3/8" DIA, 7/8" LONG
	640	G3464Y02	2	SPACER	: 1" DIA, 7/8" LONG
D	650				
D	660				
D	670				
	680	L425984	3	FAN	: 24V CAB FAN WITH HI/LOW/OFF SWITCH
	690	Z763595-001	2	GROMMET	: 3/8 I.D. HOLE 5/8 0.D. HOLE GROMMET
B	700	F012388	3FT	CABLE, MULTICONDUCTOR	: 16AWG/2 CONDUCTOR .405 O.D 13A/CONDUCTOR

NOTES

1. COVER NOT SHOWN IN ALL VIEWS FOR CLARITY.
2. USE F016578, F018229 TYRAPS AND F020984 TIE MOUNT AS REQUIRED TO BUNDLE WIRES SECURELY.
3. ROUTE WIRES PER DIAGRAM AND WIRE CHART. MAKE ALL CORNERS AS SQUARE AS POSSIBLE.
4. MARK WIRES PER HTT W.I. 18525
5. DO NOT USE FERRULE TERMINALS WITH TERMINAL BLOCKS
6. DISCARD LIGHT BULB SUPPLIED WITH F040972 AND INSTALL 174771 LIGHT BULB.
7. USE F040134 DECAL TO LABEL CABLE GRIP HOLES ON INSIDE OF ENCLOSURE AS SHOWN.
8. USE F022258 TUBING TO COVER THE SHIELD WIRE OF THE SHIELDED CABLES. COVER THE WIRE FROM JACKET TO TERMINATION.
9. USE 2" OF F021257 TO COVER END OF JACKET (TO KEEP BRAIDING ISOLATED).
10. DRILL NEW HOLES FOR CAN MODULES TO 10mm +.152-.000mm FOR A1563Y15 INSERT.
11. ALL CABLE AND WIRE LENGTHS ARE IN FEET.

CONFIDENTIAL

©COPYRIGHT 2011 HARSCO. THIS DRAWING OR DOCUMENT IS THE PROPERTY OF HARSCO AND EMBODIES CONFIDENTIAL INFORMATION, TRADE SECRET INFORMATION, AND/OR KNOW-HOW THAT IS THE PROPERTY OF HARSCO. BY ACCEPTING THIS DRAWING OR DOCUMENT, THE RECIPIENT AGREES (1) NOT TO PROVIDE, OR OTHERWISE MAKE AVAILABLE, THE DRAWING OR DOCUMENT, OR ANY INFORMATION OR KNOW-HOW EMBODIED THEREIN, TO ANY THIRD PARTY AND (2) NOT TO REPRODUCE OR USE THE DRAWING OR DOCUMENT TO MANUFACTURE ANY APPARATUS OR DEVICE, WITHOUT THE PRIOR WRITTEN AUTHORIZATION OF HARSCO.

CHANGE #		REVISION	DR	DATE
EC501059	A	NEW RELEASE	CJW	05/11
EC501407	B	UPDATE AS BUILT	CJW	06/11
EC502003	C	UPDATED ECP VIEWS, ADDED DRONE KIT CABLES TO DRAWING	CJW	09-22-11
EC502851	D	REM DETAIL VIEW "D" FROM SHT 5, IT380 WAS QTY 7	CJW	02-08-12

DRAWING TITLE/DESCRIPTION: CAB WIRING Bill Of Material

MACHINE TYPE-MODEL: MARK IV

E3 PROJECT FILE NAME: MARK IV HD_9

SHEET NUMBER: 1

NUMBER OF JUPITER SHEETS: -

TOTAL NUMBER OF SHEETS: 7

DRAWN BY: CJW

REL. DATE: 05/11

SIZE: D

SCALE:

HARSCO RAIL

E3 DRAWING

5007957

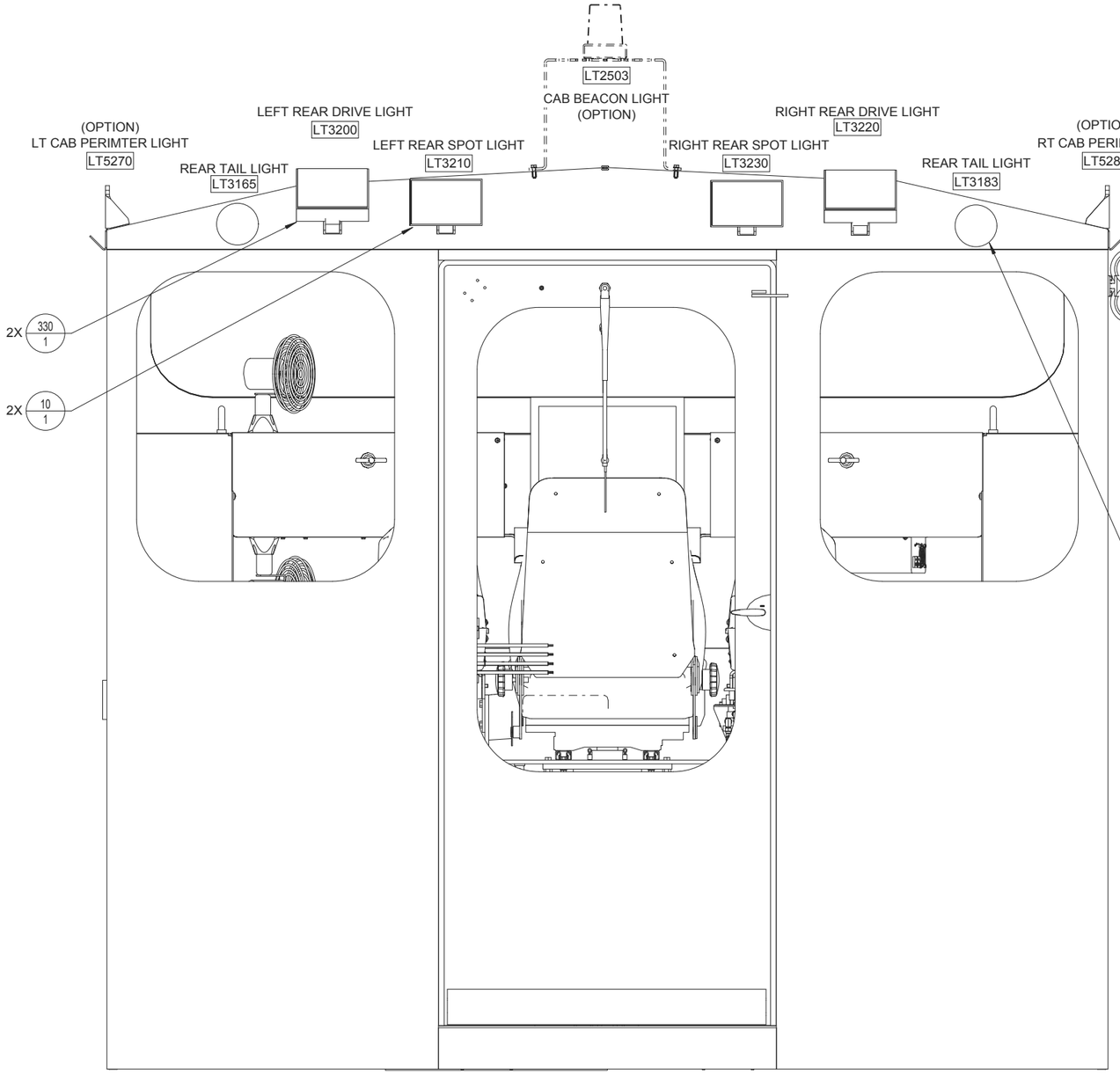

REAR OUTSIDE VIEW OF CAB

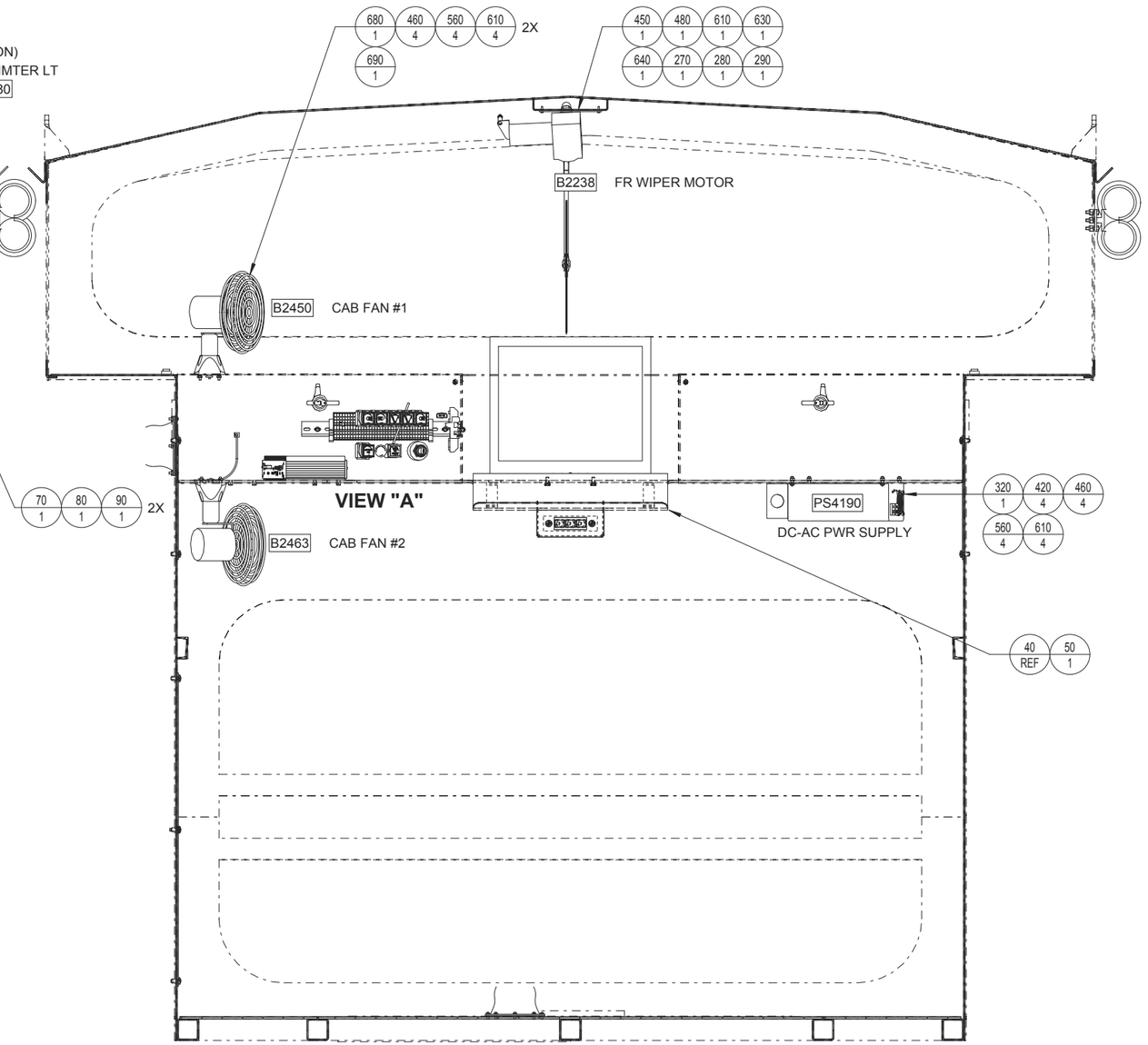

FRONT INSIDE VIEW OF CAB

CONFIDENTIAL

©COPYRIGHT 2011 HARSCO. THIS DRAWING OR DOCUMENT IS THE PROPERTY OF HARSCO AND EMBODIES CONFIDENTIAL INFORMATION, TRADE SECRET INFORMATION, AND/OR KNOW-HOW THAT IS THE PROPERTY OF HARSCO. BY ACCEPTING THIS DRAWING OR DOCUMENT, THE RECIPIENT AGREES (1) NOT TO PROVIDE, OR OTHERWISE MAKE AVAILABLE, THE DRAWING OR DOCUMENT, OR ANY INFORMATION OR KNOW-HOW EMBODIED THEREIN, TO ANY THIRD PARTY AND (2) NOT TO REPRODUCE OR USE THE DRAWING OR DOCUMENT TO MANUFACTURE ANY APPARATUS OR DEVICE, WITHOUT THE PRIOR WRITTEN AUTHORIZATION OF HARSCO.

CHANGE #		REVISION	DR	DATE
EC501059	A	NEW RELEASE	CJW	05/11
EC501407	B	UPDATE AS BUILT	CJW	06/11
EC502003	C	UPDATED ECP VIEWS, ADDED DRONE KIT CABLES TO DRAWING	CJW	09-22-11
EC502851	D	REM DETAIL VIEW "D" FROM SHT 5, IT380 WAS QTY 7	CJW	02-08-12

DRAWING TITLE/DESCRIPTION:
CAB WIRING
Operator Panel and Wiper Assembly

MACHINE TYPE-MODEL:
MARK IV

E3 PROJECT FILE NAME:
MARK IV HD_9

SHEET NUMBER: 2
NUMBER OF JUPITER SHEETS: -
TOTAL NUMBER OF SHEETS: 7

DRAWN BY: CJW
REL. DATE: 05/11
SIZE: D
SCALE:

HARSCO RAIL

E3 DRAWING
5007957

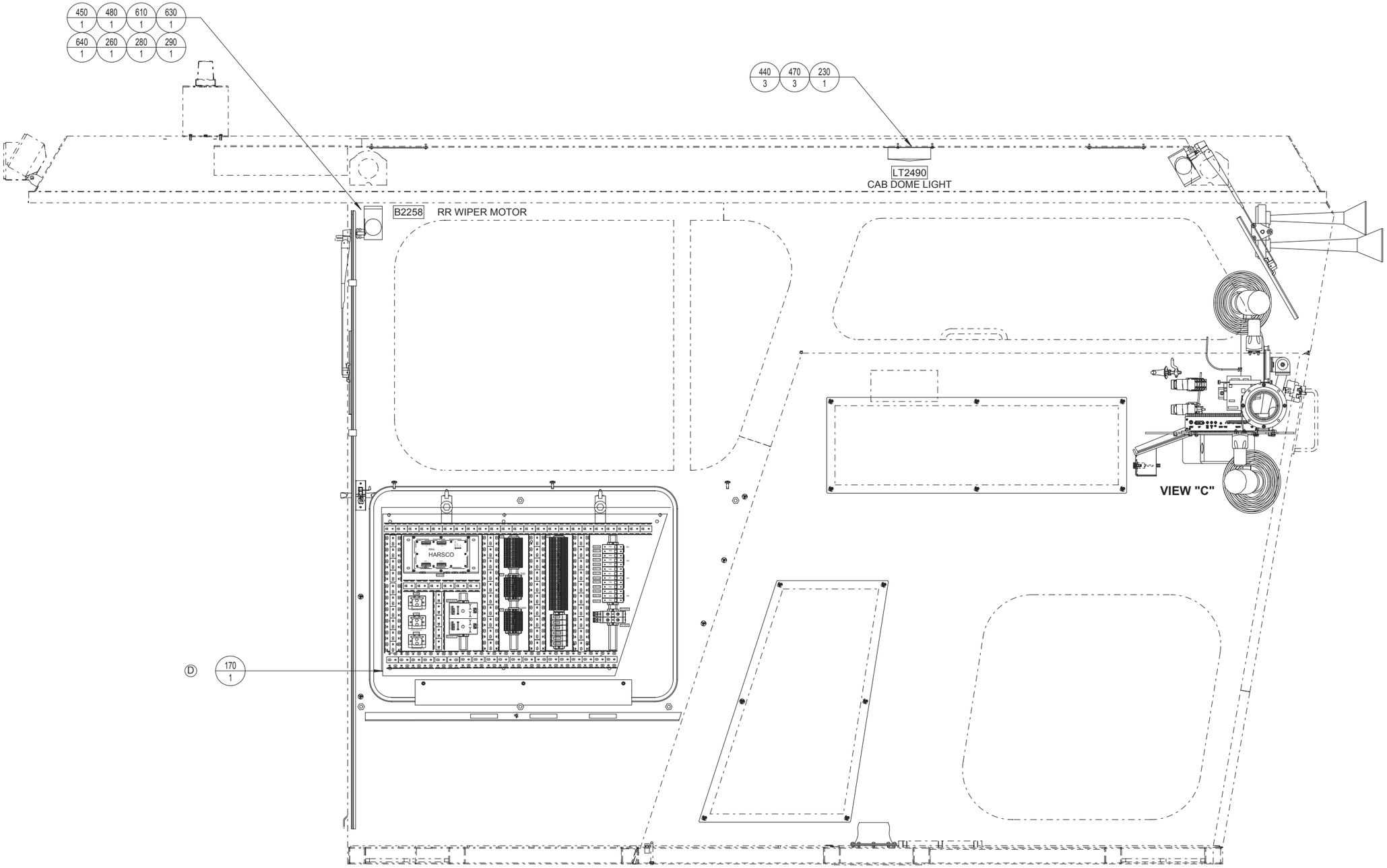

LEFT INSIDE VIEW

CONFIDENTIAL

©COPYRIGHT 2011 HARSCO. THIS DRAWING OR DOCUMENT IS THE PROPERTY OF HARSCO AND EMBODIES CONFIDENTIAL INFORMATION, TRADE SECRET INFORMATION, AND/OR KNOW-HOW THAT IS THE PROPERTY OF HARSCO. BY ACCEPTING THIS DRAWING OR DOCUMENT, THE RECIPIENT AGREES (1) NOT TO PROVIDE, OR OTHERWISE MAKE AVAILABLE, THE DRAWING OR DOCUMENT, OR ANY INFORMATION OR KNOW-HOW EMBODIED THEREIN, TO ANY THIRD PARTY AND (2) NOT TO REPRODUCE OR USE THE DRAWING OR DOCUMENT TO MANUFACTURE ANY APPARATUS OR DEVICE, WITHOUT THE PRIOR WRITTEN AUTHORIZATION OF HARSCO.

CHANGE #		REVISION	DR	DATE
EC501059	A	NEW RELEASE	CJW	05/11
EC501407	B	UPDATE AS BUILT	CJW	06/11
EC502003	C	UPDATED ECP VIEWS, ADDED DRONE KIT CABLES TO DRAWING	CJW	09-22-11
EC502851	D	REM DETAIL VIEW "D" FROM SHT 5, IT380 WAS QTY 7	CJW	02-08-12

DRAWING TITLE/DESCRIPTION:
CAB WIRING
Dome Light and Wiper Assembly

MACHINE TYPE-MODEL:
MARK IV

E3 PROJECT FILE NAME:
MARK IV HD_9

SHEET NUMBER: 3
NUMBER OF JUPITER SHEETS: -
TOTAL NUMBER OF SHEETS: 7

DRAWN BY: CJW
REL. DATE: 05/11
SIZE: D
SCALE:

HARSCO RAIL

E3 DRAWING

5007957

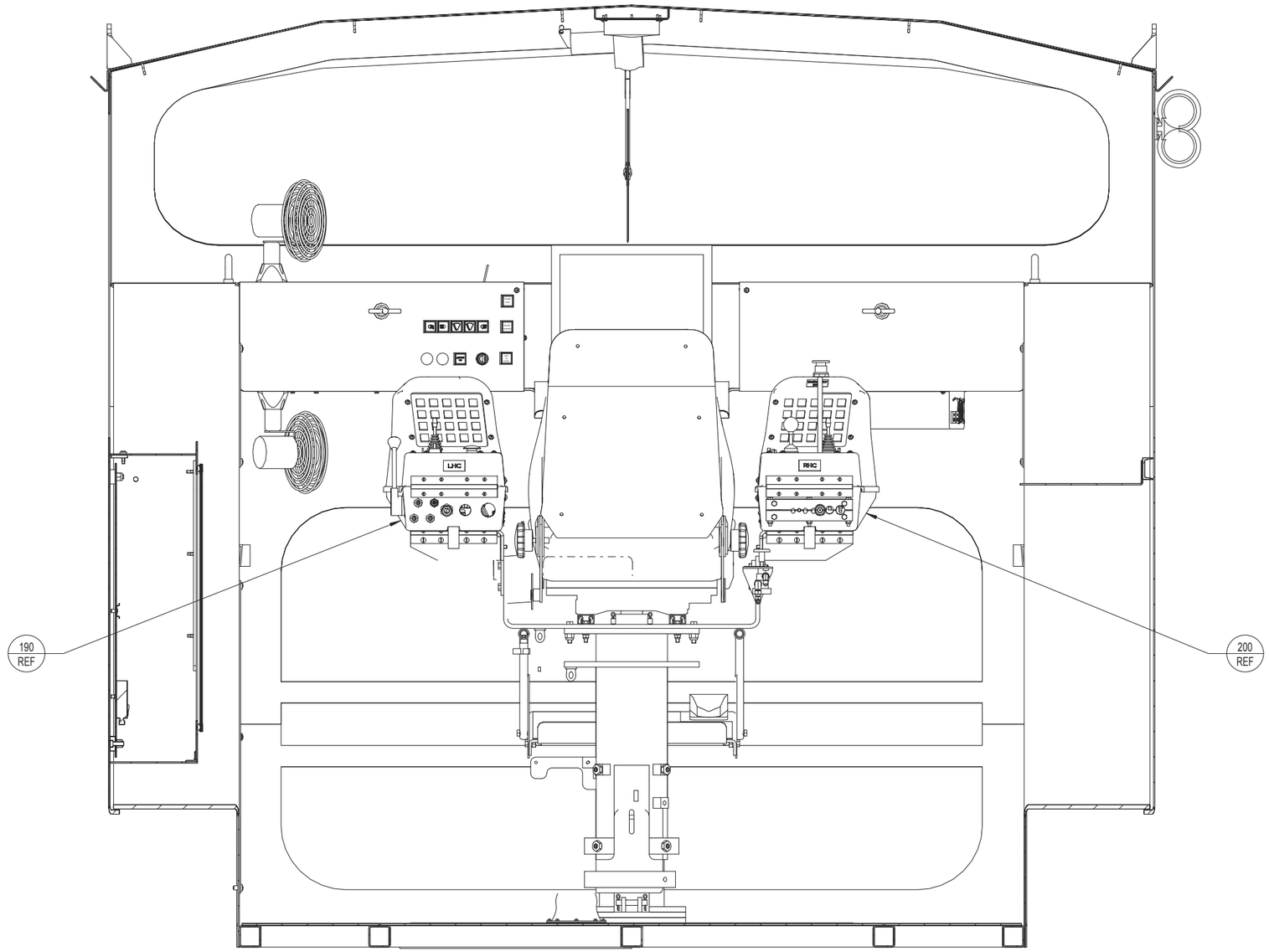

CAB WITH SEAT ASSEMBLY

CONFIDENTIAL

©COPYRIGHT 2011 HARSCO. THIS DRAWING OR DOCUMENT IS THE PROPERTY OF HARSCO AND EMBODIES CONFIDENTIAL INFORMATION, TRADE SECRET INFORMATION, AND/OR KNOW-HOW THAT IS THE PROPERTY OF HARSCO. BY ACCEPTING THIS DRAWING OR DOCUMENT, THE RECIPIENT AGREES (1) NOT TO PROVIDE, OR OTHERWISE MAKE AVAILABLE, THE DRAWING OR DOCUMENT, OR ANY INFORMATION OR KNOW-HOW EMBODIED THEREIN, TO ANY THIRD PARTY AND (2) NOT TO REPRODUCE OR USE THE DRAWING OR DOCUMENT TO MANUFACTURE ANY APPARATUS OR DEVICE, WITHOUT THE PRIOR WRITTEN AUTHORIZATION OF HARSCO.

CHANGE #		REVISION	DR	DATE
EC501059	A	NEW RELEASE	CJW	05/11
EC501407	B	UPDATE AS BUILT	CJW	06/11
EC502003	C	UPDATED ECP VIEWS, ADDED DRONE KIT CABLES TO DRAWING	CJW	09-22-11
EC502851	D	REM DETAIL VIEW "D" FROM SHT 5, IT380 WAS QTY 7	CJW	02-08-12

DRAWING TITLE/DESCRIPTION:
CAB WIRING
Armrest and Seat Assembly

MACHINE TYPE-MODEL:
MARK IV

E3 PROJECT FILE NAME:
MARK IV HD_9

SHEET NUMBER: 4
NUMBER OF JUPITER SHEETS: -
TOTAL NUMBER OF SHEETS: 7

DRAWN BY: CJW
REL. DATE: 05/11
SIZE: D
SCALE:

HARSCO RAIL

E3 DRAWING
5007957

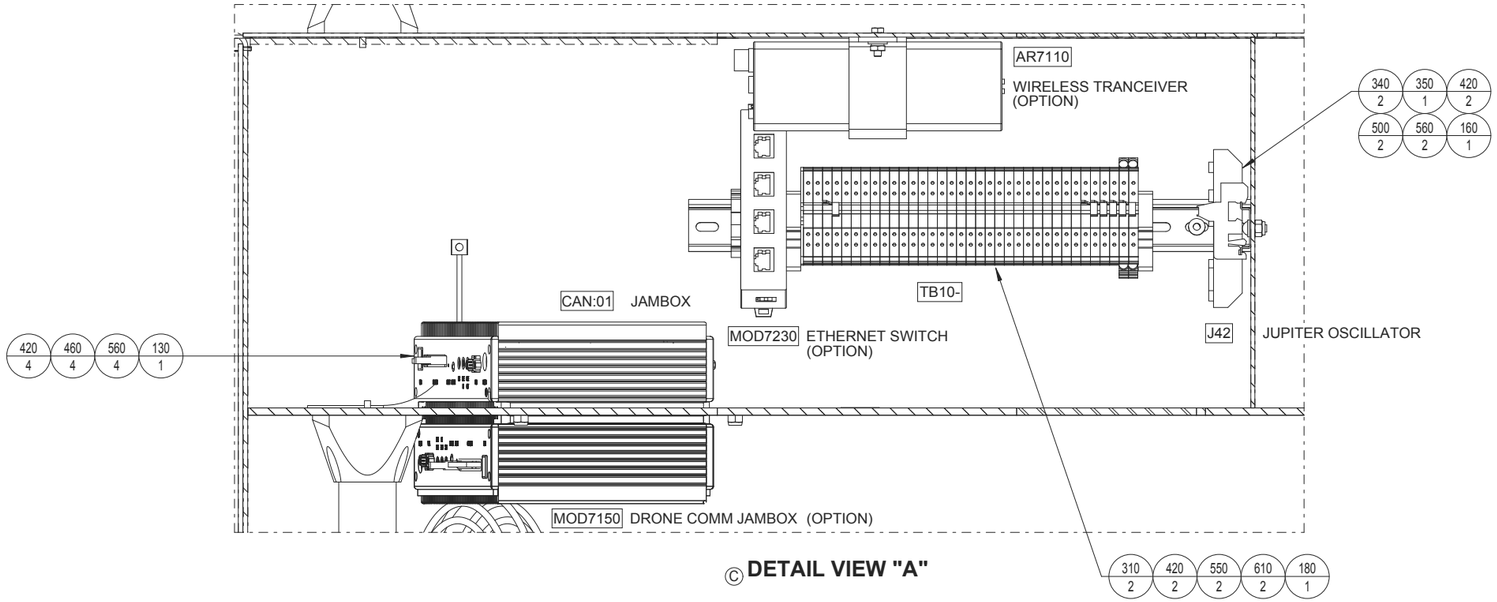

© **DETAIL VIEW "A"**

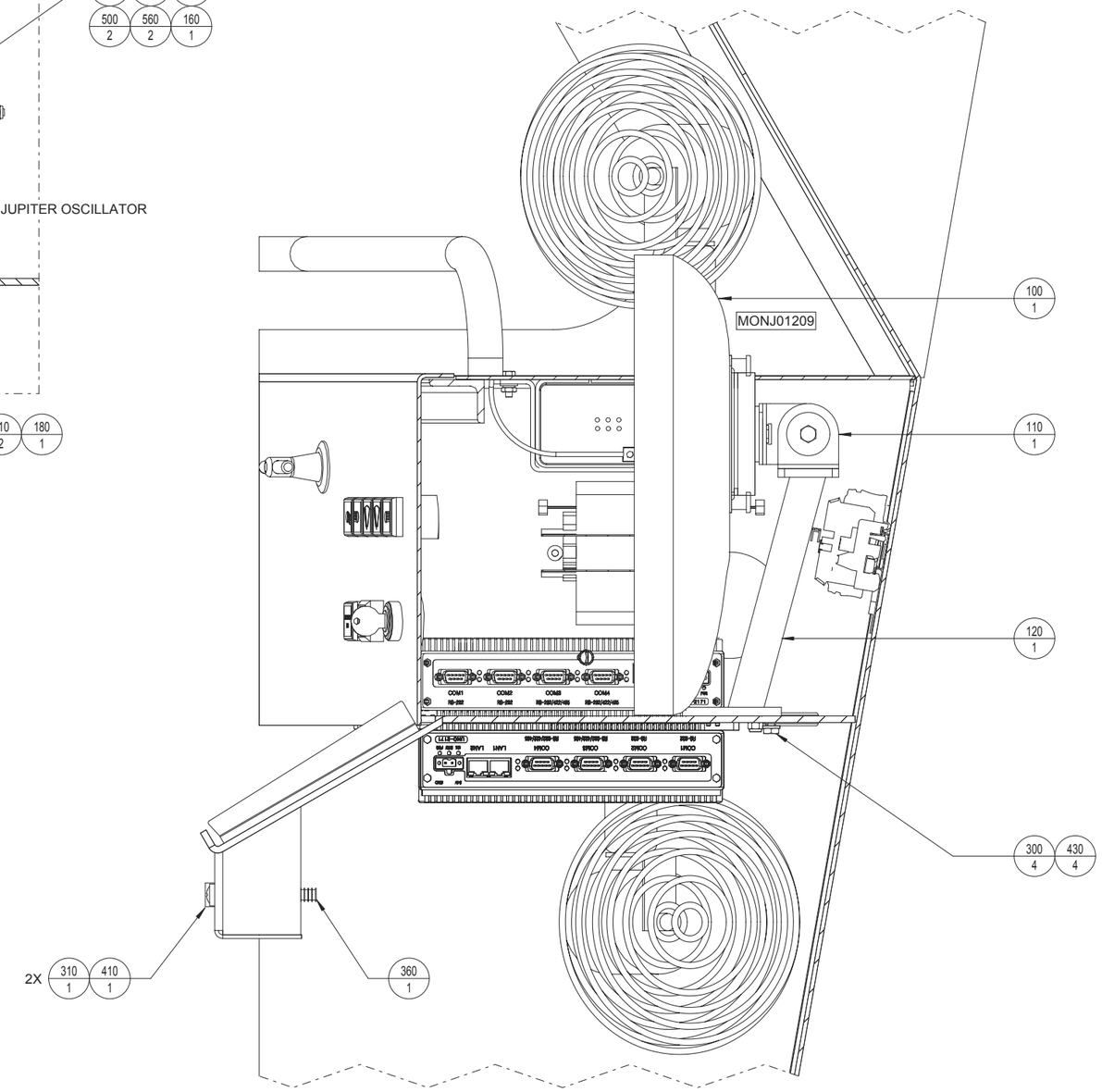

DETAIL VIEW "C"
©

Ⓓ

CONFIDENTIAL
©COPYRIGHT 2011 HARSCO. THIS DRAWING OR DOCUMENT IS THE PROPERTY OF HARSCO AND EMBODIES CONFIDENTIAL INFORMATION, TRADE SECRET INFORMATION, AND/OR KNOW-HOW THAT IS THE PROPERTY OF HARSCO. BY ACCEPTING THIS DRAWING OR DOCUMENT, THE RECIPIENT AGREES (1) NOT TO PROVIDE, OR OTHERWISE MAKE AVAILABLE, THE DRAWING OR DOCUMENT, OR ANY INFORMATION OR KNOW-HOW EMBODIED THEREIN, TO ANY THIRD PARTY AND (2) NOT TO REPRODUCE OR USE THE DRAWING OR DOCUMENT TO MANUFACTURE ANY APPARATUS OR DEVICE, WITHOUT THE PRIOR WRITTEN AUTHORIZATION OF HARSCO.

CHANGE #		REVISION	DR	DATE
EC501059	A	NEW RELEASE	CJW	05/11
EC501407	B	UPDATE AS BUILT	CJW	06/11
EC502003	C	UPDATED ECP VIEWS, ADDED DRONE KIT CABLES TO DRAWING	CJW	09-22-11
EC502851	D	REM DETAIL VIEW "D" FROM SHT 5, IT380 WAS QTY 7	CJW	02-08-12

DRAWING TITLE/DESCRIPTION:
CAB WIRING
MCB and ECP Assembly

MACHINE TYPE-MODEL:
MARK IV

E3 PROJECT FILE NAME:
MARK IV HD_9

SHEET NUMBER: 5
NUMBER OF JUPITER SHEETS: -
TOTAL NUMBER OF SHEETS: 7

DRAWN BY: CJW
REL. DATE: 05/11
SIZE: D
SCALE:

HARSCO RAIL

E3 DRAWING

5007957

RUN THESE WIRES TOGETHER IN SPLIT LOOM

WIRING CHART

RUN	WIRE	SIZE	COLOR	FROM	TERM NO.	TO	TERM NO.	PART NO	
1	000	16 AWG	White	LT2503:BLK	F009863	TB3:7	-	3407024	CAB BEACON LIGHT
2	1260	16 AWG	White	LT2503:RED	F009863	TB1:2	-	3407024	CAB BEACON LIGHT
3	2240	16 AWG	White	B2238:	F009863	TB1:37	-	3407024	FRONT WINDOW WIPER
4	2450	16 AWG	White	LT2490:+	F009863	TB1:21	-	3407024	CAB DOME LIGHT

RUN THESE WIRES TOGETHER IN SPLIT LOOM

WIRING CHART

RUN	WIRE	SIZE	COLOR	FROM	TERM NO.	TO	TERM NO.	PART NO	
1	2450	16 AWG	White	TB1:20		B2475:+	F009863	3407024	CAB DOOR FAN
2	2260	16 AWG	White	TB1:38		B2258:+	F009863	3407024	REAR DOOR WIPER

RUN THESE WIRES TO ECP PANEL

WIRING CHART

RUN	WIRE	SIZE	COLOR	FROM	TERM NO.	TO	TERM NO.	PART NO	
1	2450	16 AWG	White	TB10:33		B2450:+	F009863	3407024	CAB FAN #1
2	2450	16 AWG	White	TB10:33		B2463:+	F009863	3407024	CAB FAN #2

RUN THESE WIRES TOGETHER IN SPLIT LOOM

WIRING CHART

RUN	WIRE	SIZE	COLOR	FROM	TERM NO.	TO	TERM NO.	PART NO	
1	3112	16 AWG	White	LT3165.P1:BK	F009863	TB1:27	-	3407024	LEFT REAR TAIL LIGHT
2	3177	16 AWG	White	LT3165.P1:RD	F009863	TB1:28	-	3407024	LEFT REAR TAIL LIGHT
3	000	16 AWG	White	LT3165.P1:WH	F009863	TB3:8	-	3407024	LEFT REAR TAIL LIGHT
4	3112	16 AWG	White	LT3183.P1:BK	F009863	TB1:27	-	3407024	RIGHT REAR TAIL LIGHT
5	3177	16 AWG	White	LT3183.P1:RD	F009863	TB1:28	-	3407024	RIGHT REAR TAIL LIGHT
6	000	16 AWG	White	LT3183.P1:WH	F009863	TB3:8	-	3407024	RIGHT REAR TAIL LIGHT
7	3200	16 AWG	White	LT3200:+	F009863	TB1:29	-	3407024	LEFT REAR DRIVE LIGHT
8	000	16 AWG	White	LT3200:-	F009863	TB3:8	-	3407024	LEFT REAR DRIVE LIGHT
9	3200	16 AWG	White	LT3210:+	F009863	TB1:29	-	3407024	LEFT REAR SPOT LIGHT
10	000	16 AWG	White	LT3210:-	F009863	TB3:8	-	3407024	LEFT REAR SPOT LIGHT
11	3220	16 AWG	White	LT3230:+	F009863	TB1:30	-	3407024	RIGHT REAR DRIVE LIGHT
12	000	16 AWG	White	LT3220:-	F009863	TB3:9	-	3407024	RIGHT REAR DRIVE LIGHT
13	3220	16 AWG	White	LT3220:+	F009863	TB1:30	-	3407024	RIGHT REAR SPOT LIGHT
14	000	16 AWG	White	LT3230:-	F009863	TB3:9	-	3407024	RIGHT REAR SPOT LIGHT

A/C POWER SUPPLY — PS4190 — 10FT
ECP — F018250 — CAB

570 / 2 — 140 / 2 — 600 / 10

RUN	COLOR	WIRE #	FROM	TERM NO.	TO	TERM NO.
1	BK	000W	TB10:31	-	PS4190:-	F016461K
2	WH	4190	TB10:34	-	PS4190:+	F016461K

A/C VENT SOLENOID — L2150 — CABLE ASSEMBLY, M12
A/C — 4022348/CUT — MCB

570 / 2 — 140 / 2 — 150 / REF (D)

RUN	COLOR	WIRE #	FROM	TERM NO.	TO	TERM NO.
1	W-1	2145	L2150:1	EXISTS	TB1:15	-
2	W-2	000	L2150:1	EXISTS	TB3:6	-
3	W-3	**NC**	L2150:1	EXISTS	-	-

CAN:01 POWER CABLE — CAN01_PWR — 6FT
CAB — 701113018 — CAB

570 / 2 — 140 / 2 — 210 / 6

RUN	COLOR	WIRE #	FROM	TERM NO.	TO	TERM NO.
1	BK	J01475	CAN:01:GND	-	J42:RTN	-
2	WH	J01442	CAN:01:PWR	-	J42:+24V	-

SERIAL CABLE — COM3 — CABLE ASSEMBLY, DB9
CAB — 187919 — CAB

570 / 2 — 140 / 2 — 20 / 1

RUN	COLOR	WIRE #	FROM	TERM NO.	TO	TERM NO.
1	BK	COM3	J42:DB9	EXISTS	CAN:01:COM3	EXISTS

VGA - VIDEO — J01100 — CABLE ASSEMBLY, DB15
CAB — 410378 — CAB

570 / 2 — 140 / 2 — 30 / REF (D)

RUN	COLOR	WIRE #	FROM	TERM NO.	TO	TERM NO.
1	BK	J01100	CAN:01:VGA	EXISTS	MONJ01209:VGA	EXISTS

J42 POWER CABLE — J42_PWR — 4FT
ECP — 701113018 — CAB

570 / 2 — 140 / 2 — 210 / 4

RUN	COLOR	WIRE #	FROM	TERM NO.	TO	TERM NO.
1	BK	000W	TB10:31	-	J42:RTN	-
2	WH	4112	TB10:30	-	J42:+24	-

SPRING BRAKE BLOWDOWN — L1210 — 3FT
LHC — F012388 — FRAME

570 / 2 — 140 / 2 — 700 / 3

RUN	COLOR	WIRE #	FROM	TERM NO.	TO	TERM NO.
1	BK	000	TB17:23	-	L1210:-	-
2	WH	1240	TB17:20	-	L1210:+	-

(C) DRONE ANTENNA CABLE — C-ANT — CABLE ASSEMBLY, COAX — (OPTION)
OPT DRONE KIT — 5011146 — OPT DRONE KIT

RUN	COLOR	WIRE #	FROM	TERM NO.	TO	TERM NO.
1	BK	C-ANT	AR7110:ANT	EXISTS	E7123:ANT	EXISTS

(C) WIRELESS TRANSCEIVER — ETH3 — CABLE ASSEMBLY, ETHE — (OPTION)
OPT DRONE KIT — 2009693 — OPT DRONE KIT

RUN	COLOR	WIRE #	FROM	TERM NO.	TO	TERM NO.
1	BK	ETH3	MOD7230:PORT5	EXISTS	AR7110:10/100	EXISTS

(C) DRONE JAMBOX LAN2 — ETH2 — CABLE ASSEMBLY, ETHE — (OPTION)
OPT DRONE KIT — 2009693 — OPT DRONE KIT

RUN	COLOR	WIRE #	FROM	TERM NO.	TO	TERM NO.
1	BK	ETH2	MOD7230:PORT4	EXISTS	MOD7150:LAN2	EXISTS

(C) DRONE JAMBOX X-OVER — ETH1 — CABLE ASSEMBLY, ETHE — (OPTION)
CAB — 2014212 — OPT DRONE KIT

RUN	COLOR	WIRE #	FROM	TERM NO.	TO	TERM NO.
1	BK	ETH1	CAN:01:LAN1	EXISTS	MOD7150:LAN1	EXISTS

(C) DRONE MONITOR VGA — C-VGA — CABLE ASSEMBLY, DB15 — (OPTION)
OPT DRONE KIT — F041433 — OPT DRONE KIT

RUN	COLOR	WIRE #	FROM	TERM NO.	TO	TERM NO.
1	BK	C-VGA	MOD7150:VGA	EXISTS	MON7160:VGA	EXISTS

(C) DRONE MONITOR COM — COM1A — CABLE ASSEMBLY, DB9 — (OPTION)
OPT DRONE KIT — 2013438 — OPT DRONE KIT

RUN	COLOR	WIRE #	FROM	TERM NO.	TO	TERM NO.
1	BK	COM1A	MON7160:COM	EXISTS	MOD7150:COM1	EXISTS

MCB TO ECP CABLE #1 — MCB_ECP1 — 23FT
ECP — F018248K — MCB

570 / 2 — 140 / 2 — 580 / 20

RUN	COLOR	WIRE #	FROM	TERM NO.	TO	TERM NO.	
1	BK	1260	TB10:1	-	TB1:1	-	
2	WH	1240	TB10:2	-	TB1:3	-	
3	RD	1245	TB10:5	-	TB1:6	-	
4	GN	1268	TB10:32	-	TB1:7	-	
5	OR	1262	TB10:3	-	TB1:8	-	
6	BU	**NC**	-	-	-	-	
7	WH/BK	1295	TB10:10	-	TB1:11	-	
8	RD/BK	2280	TB10:19	-	TB1:17	-	
9	GN/BK	2300	TB10:20	-	TB1:18	-	
10	OR/BK	3485	TB10:22	-	TB2:12	-	
11	BU/BK	J06208	TB10:23	-	TB2:28	-	
12	BK/WH	J06233	TB10:24	-	TB2:29	-	
13	RD/WH	J06258	TB10:25	-	TB2:30	-	
14	GN/WH	2450	TB10:33	-	TB1:20	-	
15	BU/WH	4112	TB10:30	-	TB2:1	-	
16	BK/RD	2240	TB10:17	-	TB1:37	-	
17	WH/RD	2260	TB10:18	-	TB1:38	-	
18	OR/RD	**NC**	-	-	-	-	
(C) 19	BU/RD	000W	TB10:42	-	K1328:1	5757	(OPTION)
(C) 20	RD/GN	4120	TB10:41	-	CB7110:2	-	(OPTION)

MCB TO ECP CABLE #2 — MCB_ECP2 — 23FT
ECP — 0-3212004-0-47 — MCB

570 / 2 — 140 / 2 — 250 / 20

RUN	COLOR	WIRE #	FROM	TERM NO.	TO	TERM NO.
1	BK	000	TB10:40	-	TB3:3	-
2	WH	2170	TB10:11	-	TB1:16	-
3	RD	5450	TB10:26	-	TB1:32	-
4	GN	4190	TB10:34	-	TB2:13	-
5	OR	000W	TB10:31	-	TB4:2	-

CONFIDENTIAL

©COPYRIGHT 2011 HARSCO. THIS DRAWING OR DOCUMENT IS THE PROPERTY OF HARSCO AND EMBODIES CONFIDENTIAL INFORMATION, TRADE SECRET INFORMATION, AND/OR KNOW-HOW THAT IS THE PROPERTY OF HARSCO. BY ACCEPTING THIS DRAWING OR DOCUMENT, THE RECIPIENT AGREES (1) NOT TO PROVIDE, OR OTHERWISE MAKE AVAILABLE, THE DRAWING OR DOCUMENT, OR ANY INFORMATION OR KNOW-HOW EMBODIED THEREIN, TO ANY THIRD PARTY AND (2) NOT TO REPRODUCE OR USE THE DRAWING OR DOCUMENT TO MANUFACTURE ANY APPARATUS OR DEVICE, WITHOUT THE PRIOR WRITTEN AUTHORIZATION OF HARSCO.

CHANGE #		REVISION	DR	DATE
EC501059	A	NEW RELEASE	CJW	05/11
EC501407	B	UPDATE AS BUILT	CJW	06/11
EC502003	C	UPDATED ECP VIEWS, ADDED DRONE KIT CABLES TO DRAWING	CJW	09-22-11
EC502851	D	REM DETAIL VIEW "D" FROM SHT 5, IT380 WAS QTY 7	CJW	02-08-12

DRAWING TITLE/DESCRIPTION: CAB WIRING Cable Charts

MACHINE TYPE-MODEL: MARK IV

E3 PROJECT FILE NAME: MARK IV HD_9

SHEET NUMBER: 6

NUMBER OF JUPITER SHEETS: -

TOTAL NUMBER OF SHEETS: 7

DRAWN BY: CJW

REL. DATE: 05/11

SIZE: D

SCALE:

HARSCO RAIL

E3 DRAWING

5007957

-- CABLES FROM RHC--

CAN:02 POWER RHC			J02FP_A 4022333		CABLE ASSEMBLY, M12 RHC	
RUN	COLOR	WIRE #	FROM	TERM NO.	TO	TERM NO.
1	W-1	4120	CAN:02:FPA	EXISTS	TB15:20	-
2	W-2	4120	CAN:02:FPA	EXISTS	TB15:20	-
3	W-3	000W	CAN:02:FPA	EXISTS	TB15:22	-
4	W-4	000W	CAN:02:FPA	EXISTS	TB15:22	-
5	W-5	**NC**	CAN:02:FPA	EXISTS	-	-

CAN:02 POWER RHC			J02FP_B 4022333		CABLE ASSEMBLY, M12 RHC	
RUN	COLOR	WIRE #	FROM	TERM NO.	TO	TERM NO.
1	W-1	4120	CAN:02:FPB	EXISTS	TB15:21	-
2	W-2	4120	CAN:02:FPB	EXISTS	TB15:21	-
3	W-3	000W	CAN:02:FPB	EXISTS	TB15:23	-
4	W-4	000W	CAN:02:FPB	EXISTS	TB15:23	-
5	W-5	**NC**	CAN:02:FPB	EXISTS	-	-

RHC TO LHC CABLE RHC			RHC_LHC F018248K		15FT LHC	
RUN	COLOR	WIRE #	FROM	TERM NO.	TO	TERM NO.
1	BK	2450	TB15:5	-	TB17:1	-
2	WH	000	TB15:25	-	TB17:25	-
3	RD	J02B335	MODJ02A125:C6-1	-	TB17:5	-
4	GN	J02B350	MODJ02A125:C6-2	-	TB17:6	-
5	OR	J02B367	MODJ02A125:C6-3	-	TB17:7	-
6	BU	J02B383	MODJ02A125:C6-4	-	TB17:8	-
7	WH/BK	J02B408	MODJ02A125:C6-5	-	TB17:9	-
8	RD/BK	J02B425	MODJ02A125:C6-6	-	TB17:10	-
9	GN/BK	J02B442	MODJ02A125:C6-7	-	TB17:11	-
10	OR/BK	J02B458	MODJ02A125:C6-8	-	TB17:12	-
11	BU/BK	J02B333	MODJ02A125:C6-18	-	TB17:13	-
12	BK/WH	J02B533	MODJ02A125:C7-1	-	TB17:14	-
13	RD/WH	J02B550	MODJ02A125:C7-2	-	TB17:15	-
14	GN/WH	J02B567	MODJ02A125:C7-3	-	TB17:16	-
15	BU/WH	J02B583	MODJ02A125:C7-4	-	TB17:17	-
16	BK/RD	J02B608	MODJ02A125:C7-5	-	TB17:18	-
17	WH/RD	J02B642	TB15:14	-	TB17:19	-
18	OR/RD	1240	TB15:1	-	TB17:20	-
19	BU/RD	000	TB15:24	-	TB17:24	-
20	RD/GN	**NC**	-	-	-	-

RHC TO MCB CABLE RHC			RHC_MCB L421290		25FT MCB	
RUN	COLOR	WIRE #	FROM	TERM NO.	TO	TERM NO.
1	BK	1240	TB15:1	-	TB1:4	-
2	WH	1220	TB15:2	-	TB1:39	-
3	RD	1332	TB15:3	-	TB1:9	-
4	GN	1335	TB15:4	-	TB1:12	-
5	OR	4120	TB15:20	-	TB2:2	-
6	BU	000W	TB15:22	-	TB4:3	-
7	WH/BK	J02A261	TB15:7	-	TB1:33	-
8	RD/BK	2450	TB15:5	-	TB1:19	-
9	GN/BK	J02A259	TB15:8	-	TB1:34	-
10	OR/BK	**NC**	-	-	-	-
11	BU/BK	**NC**	-	-	-	-
12	BK/WH	000	TB15:24	-	TB3:18	-
13	RD/WH	000	TB15:26	-	TB3:19	-
14	GN/WH	**NC**	-	-	-	-
15	BU/WH	**NC**	-	-	-	-
16	BK/RD	**NC**	-	-	-	-

-- CABLES FROM RHC (CONT'D) --

FLOOR CYCLE SWITCH RHC			S2B640 4016221		CABLE ASSEMBLY, M12 RHC	
RUN	COLOR	WIRE #	FROM	TERM NO.	TO	TERM NO.
1	WH-1	J02B642	SJ02B675	EXISTS	TB15:14	-
2	WH-2	J02B658	SJ02B675	EXISTS	TB15:15	-
3	WH-3	**NC**	SJ02B675	EXISTS	-	-
4	WH-4	**NC**	SJ02B675	EXISTS	-	-
5	WH-5	**NC**	SJ02B675	EXISTS	-	-

CUT OFF MALE END OF CABLE AND WIRE INTO J42 MODULE

CAN:01 TO CAN:02 RHC			NET1-2 4022331		CABLE ASSEMBLY, M12 RHC	
RUN	COLOR	WIRE #	FROM	TERM NO.	TO	TERM NO.
1	PK	000W	CAN:02:C-IN	EXISTS	J42:1	-
2	RD	J01525	CAN:02:C-IN	EXISTS	J42:2	-
3	BU	000W	CAN:02:C-IN	EXISTS	J42:3	-
4	WH	J01558	CAN:02:C-IN	EXISTS	J42:4	-
5	BN	J01575	CAN:02:C-IN	EXISTS	J42:5	-
6	SH	**NC**	CAN:02:C-IN	EXISTS	-	-

CAN:02 TO CAN:03 RHC			NET2-3 4022331		CABLE ASSEMBLY, M12 JUP INSTALL	
RUN	COLOR	WIRE #	FROM	TERM NO.	TO	TERM NO.
1	PU	NET2-3	CAN:02:C-OUT	EXISTS	CAN:03:C-IN	EXISTS

-- CABLES FROM LHC--

SEAT ACTUATOR MOTOR CABLE LHC			B2500 F012388		10FT SEAT	
RUN	COLOR	WIRE #	FROM	TERM NO.	TO	TERM NO.
1	BK	2515	TB17:2	-	M2520:+	-
2	WH	2510	TB17:3	-	M2520:-	-

CONFIDENTIAL

©COPYRIGHT 2011 HARSCO. THIS DRAWING OR DOCUMENT IS THE PROPERTY OF HARSCO AND EMBODIES CONFIDENTIAL INFORMATION, TRADE SECRET INFORMATION, AND/OR KNOW-HOW THAT IS THE PROPERTY OF HARSCO. BY ACCEPTING THIS DRAWING OR DOCUMENT, THE RECIPIENT AGREES (1) NOT TO PROVIDE, OR OTHERWISE MAKE AVAILABLE, THE DRAWING OR DOCUMENT, OR ANY INFORMATION OR KNOW-HOW EMBODIED THEREIN, TO ANY THIRD PARTY AND (2) NOT TO REPRODUCE OR USE THE DRAWING OR DOCUMENT TO MANUFACTURE ANY APPARATUS OR DEVICE, WITHOUT THE PRIOR WRITTEN AUTHORIZATION OF HARSCO.

CHANGE #		REVISION	DR	DATE
EC501059	A	NEW RELEASE	CJW	05/11
EC501407	B	UPDATE AS BUILT	CJW	06/11
EC502003	C	UPDATED ECP VIEWS, ADDED DRONE KIT CABLES TO DRAWING	CJW	09-22-11
EC502851	D	REM DETAIL VIEW "D" FROM SHT 5, IT380 WAS QTY 7	CJW	02-08-12

DRAWING TITLE/DESCRIPTION: CAB WIRING Cable Charts

MACHINE TYPE-MODEL: MARK IV

E3 PROJECT FILE NAME: MARK IV HD_9

SHEET NUMBER: 7

NUMBER OF JUPITER SHEETS: -

TOTAL NUMBER OF SHEETS: 7

DRAWN BY: CJW

REL. DATE: 05/11

SIZE: D

SCALE:

HARSCO RAIL

E3 DRAWING

5007957

PRODUCT STRUCTURE

	ITEM	PART #	QTY	PART DESCRIPTION	
	10	6104	2	TERMINAL, RING	: 5/16" RING, 8 AWG, INSULATED
	20	163298	1	DIN RAIL	: 9.5" DIN RAIL
	30	172164	3	RELAY, POWER	: SPNO 100A 24VDC COIL
B	40	200107	32	FERRULE	: 16 AWG BLACK
	50	409760	2	TERMINAL, RING	: 5/16" RING, 4 AWG, NON-INSULATED
	60	3402461	2	TERMINAL BLOCK	: 2 CONDUCTOR #4 AWG - #4/0 AWG GREY
	70	3402469	2	TERMINAL BLOCK, AD	: 2 CONDUCTOR AWG 24-6 GREY ADAPTER
	80	3405992	1	WIRE DUCT	: WIRE DUCT W/COVER 2" X 2.9" X 6.56'
	90	3405993	1	WIRE DUCT	: WIRE DUCT W/COVER 3" X 2.9" X 6.56'
	100	3406646	60FT	WIRE	: 16AWG / RED, TYPE MTW
	110	3406649	40FT	WIRE	: 16AWG / GREEN, TYPE MTW
	120	3407024	125FT	WIRE	: 16AWG / WHITE, TYPE MTW
	130	3407028	10FT	WIRE	: 10AWG / RED, TYPE MTW
	140	3413146	30FT	WIRE	: 12AWG / RED, TYPE MTW
	150	4011819	104	TERMINAL BLOCK	: 20-10AWG, 4 CONDUCTOR, DIN RAIL, GRAY
	160	4011820	5	TERMINAL BLOCK, END PLATE	: FOR 4011819 TERMINAL BLOCK
B	170	4011821	5	TERMINAL BLOCK, JUMPER	: JUMPER BAR FOR 2 TERMINAL BLOCKS 32A
B	180	4011822	2	TERMINAL BLOCK, JUMPER	: JUMPER BAR FOR 3 TERMINAL BLOCKS 32A
	190	4011823	2	TERMINAL BLOCK, JUMPER	: JUMPER BAR FOR 4 TERMINAL BLOCKS 32A
	200	4011824	5	TERMINAL BLOCK, JUMPER	: JUMPER BAR FOR 5 TERMINAL BLOCKS 32A
	210	4011832	5	TERMINAL BLOCK	: 20-6AWG, 2 CONDUCTOR, DIN RAIL, GRAY
	220	4011833	5	TERMINAL BLOCK, END PLATE	: FOR 4011832 TERMINAL BLOCK
	230	4011838	6	TERMINAL BLOCK, JUMPER	: STEP-DOWN FOR 2 TERMINAL BLOCKS 57A
	240	4016767	1.09	DECAL	: TERMINAL BLOCK MARKER STRIP
	250	4019171	4	TAGS, CABLE	: PLASTIC CABLE TAG SLEEVE
	260	4022334	2	CABLE ASSEMBLY, M12	: 5 M W/M12 FEMALE CONN
	270	4028741	1	MODULE, MULTIPLEX	: HIGH DENSITY 32 INPUT/OUTPUT BOARD
	280	4028959	3	DIN RAIL	: 19.25" DIN RAIL
	290	4029406	1	ENCLOSURE, MACHINED	: DRILLED PANEL FOR MARK IV (MCB)
	300	A1563Y04	39	INSERT, THREADED	: #10X24 PLATED STEEL
	310	A1563Y07	2	INSERT, THREADED	: 1/4X20 PLATED STEEL
	320	B1382Y08	8	END CAP	: FOR SIEMENS BUS BAR
	330	B1382Y09	4	BUSS CONNECTOR	: FOR SIEMENS 80 AMP BUS BAR #12 UP TO #2 AWG
	340	C9678Y08	2	CIRCUIT BREAKER	: 5 AMP BREAKER DIN RAIL MOUNT
	350	C9678Y09	4	CIRCUIT BREAKER	: 10 AMP BREAKER DIN RAIL MOUNT
	360	C9678Y10	4	CIRCUIT BREAKER	: 15 AMP BREAKER DIN RAIL MOUNT
	370	C9678Y11	5	CIRCUIT BREAKER	: 20 AMP BREAKER DIN RAIL MOUNT
	380	C9678Y12	1	CIRCUIT BREAKER	: 30 AMP BREAKER DIN RAIL MOUNT
	390	C9678Y23	2	CIRCUIT BREAKER	: 8 AMP BREAKER DIN RAIL MOUNT
B	400	D0650Y04	6	RELAY, SOCKET	: SOCKET
B	410	D0650Y07	6	RELAY, DC	: 2-NO/NC DPDT 24V COIL CONTACTS 30V @10A
	420	F001050	39	WASHER	: WROUGHT WASHER #10 (.190)
	430	F001106	2	WASHER	: WROUGHT WASHER 1/4 ZP
	440	F003067	2	SCREW	: 1/4-20X5/8 HEX HEAD CAP SCREW GR5 ZP
	450	F004320K	6	TERMINAL, RING	: #10 RING, 16-14 AWG, INSULATED
	460	F009535	2	WASHER	: SAE RGLR LOCK WASHER 1/4 ZP
	470	F009594	39	SCREW	: #10-24X5/8 ROUND HEAD MACHINE SCREW ZP
	480	F011900	15FT	WIRE	: 8AWG / RED
	490	F015120	15FT	WIRE	: 6AWG / RED
	500	F015121K	4	TERMINAL, RING	: 5/16" RING, 6 AWG, INSULATED
	510	F016461K	1	TERMINAL, RING	: 5/16" RING, 12-10 AWG, INSULATED
	520	F018229	20	TY-RAP	: SMALL TY-RAP 3 1/2"
	530	F020241	10FT	WIRE	: 4AWG / RED
	540	F020242	20FT	WIRE	: 6AWG / BLACK
	550	F020697	10FT	WIRE	: 4 AWG/ BLACK
	560	F020819	15FT	WIRE	: 8AWG / BLACK
	570	F020957	0.25FT	SHRINK TUBING	: TUBING 0.19" I.D. SHRINK RATE .012-.168"
	580	F020984	8	TY-RAP MOUNT	: USED WITH TY-RAP
B	590	F023518	8	END STOP	: SCREWED END STOP/CLIP
	600	F025837	39	WASHER	: LOCK WASHER #10
	610	F040134	44	DECAL	: COMPONENT LABEL
	620	F040174	2	DIODE	: 3A 200 PIV RECTIFIER
	630	F041270	8	END STOP	: END STOP FOR ALL DIN RAIL
	640	H4985Y02	2	BUSS BAR	: 5 SLOT CIRCUIT BREAKER BUSS BAR
	650	H4985Y06	1	BUSS BAR	: 3 SLOT CIRCUIT BREAKER BUSS BAR
	660	H4985Y10	1	BUSS BAR	: 2 SLOT CIRCUIT BREAKER BUSS BAR
	670	H5614Y01	2	MODULE, H-BRIDGE	: 2 CHANNEL MOTOR DRIVER, H-BRIDGE

NOTES

1. USE WAGO PEN TO MARK F040134 DECAL AND 4016767 DECAL PER DRAWING. APPLY AS SHOWN.
2. COVER NOT SHOWN IN ALL VIEWS FOR CLARITY.
3. APPLY TERMINALS USING RATCHET TYPE CRIMP TOOL.
4. USE F018229 TYRAPS AND F020984 TIE MOUNT AS REQUIRED TO BUNDLE WIRES SECURELY.
5. ROUTE WIRES PER DIAGRAM AND WIRE CHART. MAKE ALL CORNERS AS SQUARE AS POSSIBLE.
6. LABEL 4011819 AND 4011832 TERMINAL BLOCK WITH 4016767 DECAL
7. MARK WIRES PER HTT W.I. 18525
8. DO NOT USE FERRULE TERMINALS WITH TERMINAL BLOCKS
9. USE F040134 DECAL TO LABEL CABLE GRIP HOLES ON INSIDE OF ENCLOSURE AS SHOWN.
10. ALL CABLE AND WIRE LENGTHS ARE IN FEET.

CONFIDENTIAL

©COPYRIGHT 2011 HARSCO. THIS DRAWING OR DOCUMENT IS THE PROPERTY OF HARSCO AND EMBODIES CONFIDENTIAL INFORMATION, TRADE SECRET INFORMATION, AND/OR KNOW-HOW THAT IS THE PROPERTY OF HARSCO. BY ACCEPTING THIS DRAWING OR DOCUMENT, THE RECIPIENT AGREES (1) NOT TO PROVIDE, OR OTHERWISE MAKE AVAILABLE, THE DRAWING OR DOCUMENT, OR ANY INFORMATION OR KNOW-HOW EMBODIED THEREIN, TO ANY THIRD PARTY AND (2) NOT TO REPRODUCE OR USE THE DRAWING OR DOCUMENT TO MANUFACTURE ANY APPARATUS OR DEVICE, WITHOUT THE PRIOR WRITTEN AUTHORIZATION OF HARSCO.

CHANGE #		REVISION	DR	DATE
EC501056	A	NEW RELEASE	CJW	05/11
EC501405	B	UPDATE AS BUILT	CJW	06/11
EC502003	C	UPDATE VIEW- ADD DRONE SYSTEM PWR CB	CJW	09-22-11
EC502851	D	UPDATED WIRE CHART, RELOCATED TB-PWR & TB-GND ON DIN RAIL	CJW	02-08-12

DRAWING TITLE/DESCRIPTION: MCB ASSEMBLY Bill Of Material

MACHINE TYPE-MODEL: MARK IV

E3 PROJECT FILE NAME: MARK IV HD_9

SHEET NUMBER: 1

NUMBER OF JUPITER SHEETS: -

TOTAL NUMBER OF SHEETS: 4

DRAWN BY: CJW

REL. DATE: 05/11

SIZE: D

SCALE:

HARSCO RAIL

E3 DRAWING

5007951

WIRING CHART

RUN	WIRE	SIZE	COLOR	FROM	TERM NO.	TO	TERM NO.	PART NO
1	000	4 AWG	Black	K1328:2	409760	TB-GND2:2	-	F020697
2	000	6 AWG	Black	TB3:1	-	TB-GND2A:2A	-	F020242
3	000	6 AWG	Black	TB3:10	-	TB3:1	-	F020242
4	000	6 AWG	Black	TB3:10	-	TB3:20	-	F020242
5	000W	8 AWG	Black	K1328:1	6104	TB4:1	-	F020819
6	000W	8 AWG	Black	K1328:1	6104	TB4:10	-	F020819
7								
8								
9	000	16 AWG	Green	KJ06392:8	200107	TB3:13	-	3406649
10	000	16 AWG	Green	KJ06459:8	200107	TB3:14	-	3406649
11	000	16 AWG	Green	MODJ06559:GND	-	TB3:14	-	3406649
12	000	16 AWG	Green	K1328:-	F004320K	TB3:4	-	3406649
13	000	16 AWG	Green	K2280:8	200107	TB3:7	-	3406649
14	000	16 AWG	Green	K1233:-	F004320K	TB3:17	-	3406649
15	000	16 AWG	Green	K2300:8	200107	TB3:7	-	3406649
16	000	16 AWG	Green	K1320:-	F004320K	TB3:4	-	3406649
17	000	16 AWG	Green	MODJ06742:GND	-	TB3:14	-	3406649
18	000	16 AWG	Green	KJ06425:8	200107	TB3:13	-	3406649
19	000	16 AWG	Green	K1275:8	200107	TB3:3	-	3406649
20	2122	10 AWG	Red	CB2120:2	-	TB1:13	-	3407028
21	4110	10 AWG	Red	K1320:2	F016461K	CB4160:1	-	3407028
22	1260	12 AWG	Red	CB1260:2	-	TB1:1	-	3413146
23	2170	12 AWG	Red	CB2170:2	-	TB1:16	-	3413146
24	2450	12 AWG	Red	CB2450:2	-	TB1:19	-	3413146
25	3110	12 AWG	Red	CB3110:2	-	TB1:23	-	3413146
26	3485	12 AWG	Red	CB4170:2	-	TB2:8	-	3413146
27	4112	12 AWG	Red	CB4110:2	-	TB2:1	-	3413146
28	4120	12 AWG	Red	CB4120:2	-	TB2:2	-	3413146
29	4130	12 AWG	Red	CB4130:2	-	TB2:3	-	3413146
30	4140	12 AWG	Red	CB4140:2	-	TB2:4	-	3413146
31	4150	12 AWG	Red	CB4150:2	-	TB1:42	-	3413146
32	4160	12 AWG	Red	CB4160:2	-	TB2:6	-	3413146
33	4190	12 AWG	Red	CB4190:2	-	TB2:13	-	3413146
34	4220	12 AWG	Red	CB4220:2	-	TB2:14	-	3413146
D 35	4250	12 AWG	Red	CB4260:2	-	TB2:36	-	3413146
36	1245	16 AWG	Red	CB1245:2	-	TB1:6	-	3406646
37	1262	16 AWG	Red	CB1295:1	-	TB1:8	-	3406646
38	1332	16 AWG	Red	CB1295:2	-	TB1:9	-	3406646
39	3110	16 AWG	Red	K2280:5	200107	TB1:23	-	3406646
40	3110	16 AWG	Red	K2280:6	200107	TB1:23	-	3406646
41	3110	16 AWG	Red	K2300:5	200107	TB1:24	-	3406646
42	3110	16 AWG	Red	K2300:6	200107	TB1:24	-	3406646
43								
44	3485	16 AWG	Red	MODJ06559:24V	-	TB2:12	-	3406646
45	3485	16 AWG	Red	MODJ06742:24V	-	TB2:12	-	3406646
D 46	4230	16 AWG	Red	KJ06459:5	200107	TB2:15	-	3406646
47	4230	16 AWG	Red	KJ06425:5	200107	TB2:15	-	3406646
D 48	4220	16 AWG	Red	KJ06425:6	200107	TB2:14	-	3406646
D 49	4230	16 AWG	Red	CB4230:2	-	TB2:15	-	3406646
D 50	4220	16 AWG	Red	KJ06459:6	200107	TB2:14	-	3406646
51	4250	16 AWG	Red	KJ06392:5	200107	TB2:36	-	3406646
52	1140	4 AWG	Red	K1320:1	409760	TB-PWR4:4	-	F020241
53	1140	6 AWG	Red	K1233:1	F015121K	TB-PWR4A:4A	-	F015120
54	2112	6 AWG	Red	W6A:1	-	K1233:2	F015121K	F015120
55	4110	6 AWG	Red	W7A:1	-	K1320:2	F015121K	F015120
56	4110	6 AWG	Red	W8A:1	-	K1320:2	F015121K	F015120
57	1140	8 AWG	Red	W5A:1	-	TB-PWR4A:4A	-	F011900
58	1240	16 AWG	White	K1275:6	200107	TB1:4	-	3407024
59	1240	16 AWG	White	CB1245:1	-	TB1:3	-	3407024
60	1232	16 AWG	White	K1275:2	200107	TB1:5	-	3407024
61	1232	16 AWG	White	K1233:+	F004320K	TB1:5	-	3407024
62	1268	16 AWG	White	K1275:7	200107	TB1:7	-	3407024
63	1295	16 AWG	White	K1328:+	F004320K	TB1:11	-	3407024
64	1295	16 AWG	White	K1320:+	F004320K	TB1:11	-	3407024
65	2280	16 AWG	White	K2280:7	200107	TB1:17	-	3407024
66	2300	16 AWG	White	K2300:7	200107	TB1:18	-	3407024
67	3112	16 AWG	White	K2280:4	200107	TB1:25	-	3407024
68	3112	16 AWG	White	K2280:3	200107	TB1:26	-	3407024
69	3200	16 AWG	White	K2300:3	200107	TB1:29	-	3407024
70	3220	16 AWG	White	K2300:4	200107	TB1:30	-	3407024
71								
72								
73								
74								
75								

WIRING CHART

RUN	WIRE	SIZE	COLOR	FROM	TERM NO.	TO	TERM NO.	PART NO
76								
77								
78								
D 79								
D 80	4222	16 AWG	White	KJ06425:4	200107	TB2:17	-	3407024
D 81	4222	16 AWG	White	KJ06459:3	200107	TB2:18	-	3407024
D 82	4232	16 AWG	White	KJ06459:4	200107	TB2:16	-	3407024
83	4242	16 AWG	White	KJ06425:3	200107	TB2:18	-	3407024
84	4262	16 AWG	White	KJ06392:3	200107	TB2:19	-	3407024
85	J05510	16 AWG	White	CAN:06:C1-8	-	TB2:27	-	3407024
86	J06200	16 AWG	White	CAN:06:C1-1	-	TB2:20	-	3407024
87	J06208	16 AWG	White	CAN:06:C3-1	-	TB2:28	-	3407024
88	J06233	16 AWG	White	CAN:06:C3-2	-	TB2:29	-	3407024
89	J06258	16 AWG	White	CAN:06:C3-3	-	TB2:30	-	3407024
90	J06292	16 AWG	White	CAN:06:C1-2	-	TB2:21	-	3407024
91	J06358	16 AWG	White	CAN:06:C1-3	-	TB2:22	-	3407024
92	J06392	16 AWG	White	CAN:06:C1-4	-	TB2:23	-	3407024
93	J06394	16 AWG	White	KJ06392:7	200107	TB2:31	-	3407024
94	J06394	16 AWG	White	CAN:06:C3-4	-	TB2:31	-	3407024
95	J06425	16 AWG	White	CAN:06:C1-5	-	TB2:24	-	3407024
96	J06427	16 AWG	White	KJ06425:7	200107	TB2:32	-	3407024
97	J06427	16 AWG	White	CAN:06:C3-5	-	TB2:32	-	3407024
98	J06458	16 AWG	White	CAN:06:C1-6	-	TB2:25	-	3407024
99	J06460	16 AWG	White	KJ06459:7	200107	TB2:33	-	3407024
100	J06460	16 AWG	White	CAN:06:C3-6	-	TB2:33	-	3407024
101	J06494	16 AWG	White	CAN:06:C1-7	-	TB2:26	-	3407024
102	J06558	16 AWG	White	MODJ06559:1IN1	-	CAN:06:C4-1	-	3407024
103	J06575	16 AWG	White	CAN:06:C4-2	-	MODJ06559:1IN2	-	3407024
104	J06592	16 AWG	White	MODJ06559:1EF	-	CAN:06:C2-1	-	3407024
105	J06642	16 AWG	White	CAN:06:C2-2	-	MODJ06559:2EF	-	3407024
106	J06658	16 AWG	White	CAN:06:C4-3	-	MODJ06559:2IN1	-	3407024
107	J06675	16 AWG	White	MODJ06742:1EF	-	CAN:06:C2-3	-	3407024
108	J06677	16 AWG	White	MODJ06559:2IN2	-	CAN:06:C4-4	-	3407024
109	J06708	16 AWG	White	CAN:06:C2-4	-	MODJ06742:2EF	-	3407024
110	J06742	16 AWG	White	CAN:06:C4-5	-	MODJ06742:1IN1	-	3407024
111	J06758	16 AWG	White	MODJ06742:1IN2	-	CAN:06:C4-6	-	3407024
112	J06808	16 AWG	White	CAN:06:C4-7	-	MODJ06742:2IN1	-	3407024
113	J06842	16 AWG	White	MODJ06742:2IN2	-	CAN:06:C4-8	-	3407024

450 / 6	500 / 4	D 40 / 32	
50 / 2	10 / 2	510 / 1	

JUMPER CHART

RUN	FROM	TO	PART NO.
1	TB1:3	TB1:4	4011821
2	TB1:19	TB1:21	4011822
3	TB1:23	TB1:24	4011821
4	TB1:25	TB1:27	4011822
5	TB1:42	TB1:43	4011821
6	TB2:4	TB2:5	4011821
7	TB2:6	TB2:7	4011821
8	TB2:8	TB2:12	4011824
9	TB3:1	TB3:2	4011838
10	TB3:2	TB3:6	4011824
11	TB3:6	TB3:9	4011823
12	TB3:10	TB3:9	4011838
13	TB3:10	TB3:11	4011838
14	TB3:11	TB3:15	4011824
15	TB3:14	TB3:19	4011824
16	TB3:19	TB3:20	4011838
17	TB4:1	TB4:2	4011838
18	TB4:2	TB4:6	4011824
19	TB4:6	TB4:9	4011823
20	TB4:10	TB4:9	4011838

170 / 5	180 / 2	190 / 2
200 / 5	230 / 6	

DIODE CHART

RUN	DEVICE	FROM	TO	PART NO.
1	CR1240	K1233:+	K1233:-	F040174
2	CR1330	K1328:+	K1328:-	F040174

620 / 2	570 / .25

CAN:06 POWER MCB — J06FP_A 4022334 — CABLE ASSEMBLY, M12 MCB

RUN	COLOR	WIRE #	FROM	TERM NO.	TO	TERM NO.
1	W-1	4160	CAN:06:FPA	EXISTS	TB2:7	-
2	W-2	4160	CAN:06:FPA	EXISTS	TB2:7	-
3	W-3	000W	CAN:06:FPA	EXISTS	TB4:9	-
4	W-4	000W	CAN:06:FPA	EXISTS	TB4:9	-
5	W-5	**NC**	CAN:06:FPA	EXISTS	-	-

520 / 2	250 / 2	260 / 1

CAN:06 POWER MCB — J06FP_B 4022334 — CABLE ASSEMBLY, M12 MCB

RUN	COLOR	WIRE #	FROM	TERM NO.	TO	TERM NO.
1	W-1	4160	CAN:06:FPB	EXISTS	TB2:7	-
2	W-2	4160	CAN:06:FPB	EXISTS	TB2:7	-
3	W-3	000W	CAN:06:FPB	EXISTS	TB4:9	-
4	W-4	000W	CAN:06:FPB	EXISTS	TB4:9	-
5	W-5	**NC**	CAN:06:FPB	EXISTS	-	-

520 / 2	250 / 2	260 / 1

CONFIDENTIAL

©COPYRIGHT 2011 HARSCO. THIS DRAWING OR DOCUMENT IS THE PROPERTY OF HARSCO AND EMBODIES CONFIDENTIAL INFORMATION, TRADE SECRET INFORMATION, AND/OR KNOW-HOW THAT IS THE PROPERTY OF HARSCO. BY ACCEPTING THIS DRAWING OR DOCUMENT, THE RECIPIENT AGREES (1) NOT TO PROVIDE, OR OTHERWISE MAKE AVAILABLE, THE DRAWING OR DOCUMENT, OR ANY INFORMATION OR KNOW-HOW EMBODIED THEREIN, TO ANY THIRD PARTY AND (2) NOT TO REPRODUCE OR USE THE DRAWING OR DOCUMENT TO MANUFACTURE ANY APPARATUS OR DEVICE, WITHOUT THE PRIOR WRITTEN AUTHORIZATION OF HARSCO.

CHANGE #		REVISION	DR	DATE
EC501056	A	NEW RELEASE	CJW	05/11
EC501405	B	UPDATE AS BUILT	CJW	06/11
EC502003	C	UPDATE VIEW- ADD DRONE SYSTEM PWR CB	CJW	09-22-11
EC502851	D	UPDATED WIRE CHART, RELOCATED TB-PWR & TB-GND ON DIN RAIL	CJW	02-08-12

DRAWING TITLE/DESCRIPTION: MCB ASSEMBLY Wiring

MACHINE TYPE-MODEL: MARK IV

E3 PROJECT FILE NAME: MARK IV HD_9

SHEET NUMBER: 2

NUMBER OF JUPITER SHEETS: -

TOTAL NUMBER OF SHEETS: 4

DRAWN BY: CJW

REL. DATE: 05/11

SIZE: D

SCALE:

HARSCO RAIL

E3 DRAWING

5007951

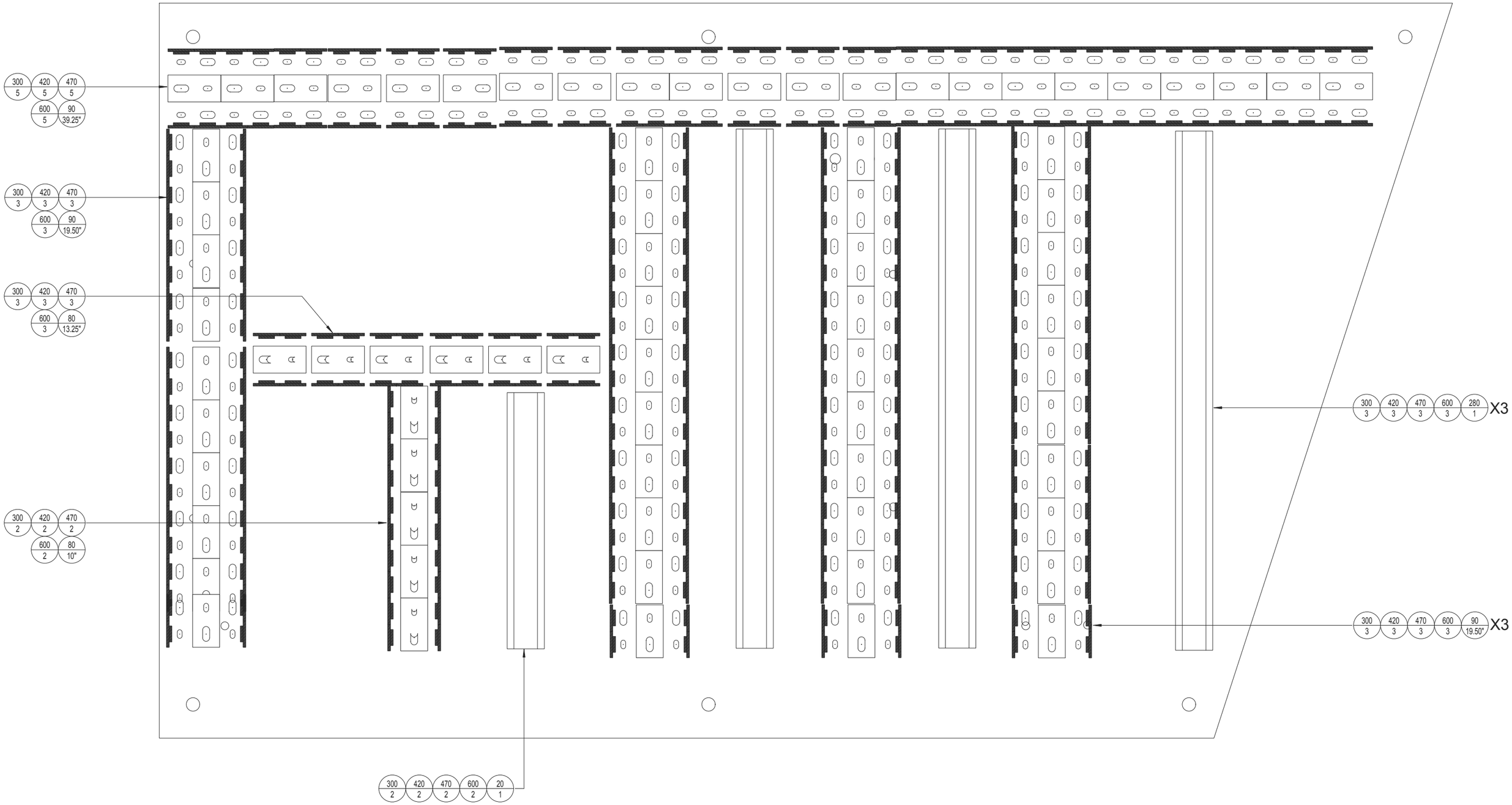

CONFIDENTIAL

©COPYRIGHT 2011 HARSCO. THIS DRAWING OR DOCUMENT IS THE PROPERTY OF HARSCO AND EMBODIES CONFIDENTIAL INFORMATION, TRADE SECRET INFORMATION, AND/OR KNOW-HOW THAT IS THE PROPERTY OF HARSCO. BY ACCEPTING THIS DRAWING OR DOCUMENT, THE RECIPIENT AGREES (1) NOT TO PROVIDE, OR OTHERWISE MAKE AVAILABLE, THE DRAWING OR DOCUMENT, OR ANY INFORMATION OR KNOW-HOW EMBODIED THEREIN, TO ANY THIRD PARTY AND (2) NOT TO REPRODUCE OR USE THE DRAWING OR DOCUMENT TO MANUFACTURE ANY APPARATUS OR DEVICE, WITHOUT THE PRIOR WRITTEN AUTHORIZATION OF HARSCO.

CHANGE #		REVISION	DR	DATE
EC501056	A	NEW RELEASE	CJW	05/11
EC501405	B	UPDATE AS BUILT	CJW	06/11
EC502003	C	UPDATE VIEW- ADD DRONE SYSTEM PWR CB	CJW	09-22-11
EC502851	D	UPDATED WIRE CHART, RELOCATED TB-PWR & TB-GND ON DIN RAIL	CJW	02-08-12

DRAWING TITLE/DESCRIPTION:
MCB ASSEMBLY
Assembly

MACHINE TYPE-MODEL:
MARK IV

E3 PROJECT FILE NAME:
MARK IV HD_9

SHEET NUMBER: 3
NUMBER OF JUPITER SHEETS: -
TOTAL NUMBER OF SHEETS: 4

DRAWN BY: CJW
REL. DATE: 05/11
SIZE: D
SCALE:

HARSCO RAIL

E3 DRAWING
5007951

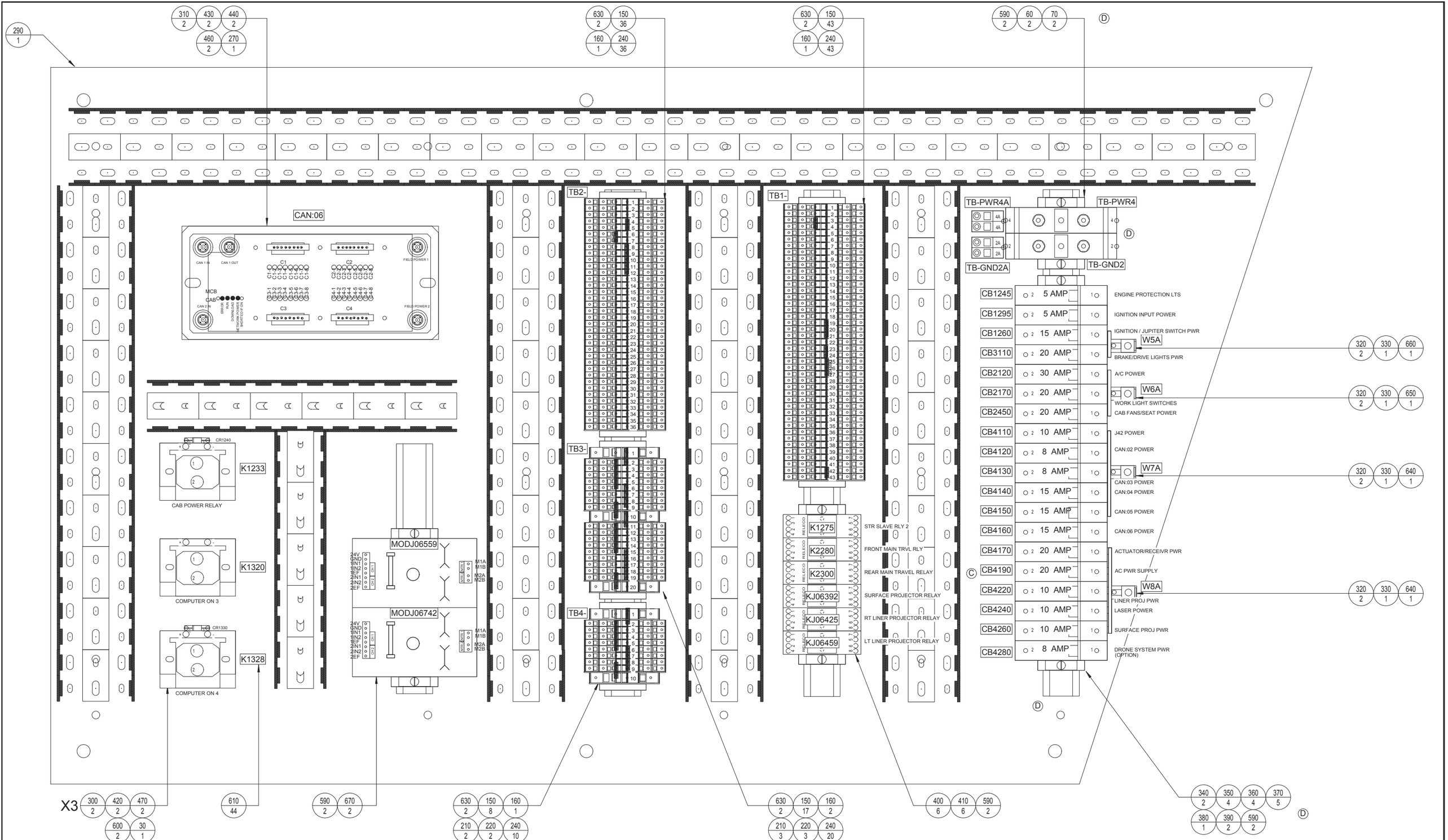

CONFIDENTIAL

©COPYRIGHT 2011 HARSCO. THIS DRAWING OR DOCUMENT IS THE PROPERTY OF HARSCO AND EMBODIES CONFIDENTIAL INFORMATION, TRADE SECRET INFORMATION, AND/OR KNOW-HOW THAT IS THE PROPERTY OF HARSCO. BY ACCEPTING THIS DRAWING OR DOCUMENT, THE RECIPIENT AGREES (1) NOT TO PROVIDE, OR OTHERWISE MAKE AVAILABLE, THE DRAWING OR DOCUMENT, OR ANY INFORMATION OR KNOW-HOW EMBODIED THEREIN, TO ANY THIRD PARTY AND (2) NOT TO REPRODUCE OR USE THE DRAWING OR DOCUMENT TO MANUFACTURE ANY APPARATUS OR DEVICE, WITHOUT THE PRIOR WRITTEN AUTHORIZATION OF HARSCO.

CHANGE #		REVISION	DR	DATE
EC501056	A	NEW RELEASE	CJW	05/11
EC501405	B	UPDATE AS BUILT	CJW	06/11
EC502003	C	UPDATE VIEW- ADD DRONE SYSTEM PWR CB	CJW	09-22-11
EC502851	D	UPDATED WIRE CHART, RELOCATED TB-PWR & TB-GND ON DIN RAIL	CJW	02-08-12

DRAWING TITLE/DESCRIPTION: MCB ASSEMBLY Assembly

MACHINE TYPE-MODEL: MARK IV

E3 PROJECT FILE NAME: MARK IV HD_9

SHEET NUMBER: 4

NUMBER OF JUPITER SHEETS: -

TOTAL NUMBER OF SHEETS: 4

DRAWN BY: CJW

REL. DATE: 05/11

SIZE: D

SCALE:

HARSCO RAIL

E3 DRAWING

5007951

PRODUCT STRUCTURE

ITEM	PART #	QTY	PART DESCRIPTION	
10	164824	1	SWITCH, IGNITION	: 3 POSITION SWITCH CASE GRD
20	3406646	50 FT	WIRE	: 16AWG / RED, TYPE MTW
30	3406649	30 FT	WIRE	: 16AWG / GREEN, TYPE MTW
40	4006078	1	PANEL, INDICATOR	: INDICATOR LIGHT PANEL
50	4011819	40	TERMINAL BLOCK	: 20-10AWG, 4 CONDUCTOR, DIN RAIL, GRAY
60	4011820	1	TERMINAL BLOCK, END PLATE	: FOR 4011819 TERMINAL BLOCK
70	4011823	1	TERMINAL BLOCK, JUMPER	: JUMPER BAR FOR 4 TERMINAL BLOCKS 32A
80	4011824	1	TERMINAL BLOCK, JUMPER	: JUMPER BAR FOR 5 TERMINAL BLOCKS 32A
90	4016767	.40	DECAL	: TERMINAL BLOCK MARKER STRIP
D 100	4031163	REF	PANEL, INDICATOR	: CONTROL PANEL DOOR
110	4031488	1	DECAL, INSERT	: ENGINE STOP DECAL INSERT
120	0-3101019-0-09	9	LIGHT, BULB	: 36VDC DOUBLE CONTACT BAYONET BULB
130	0-3101019-0-33	1	LIGHT, BULB	: 24V YELLOW LED STYLE LIGHT
140	0-3101019-0-36	2	LIGHT, BULB	: 24V RED LED STYLE LIGHT
150	0-3274003-0-04	2	PLUG, HOLE	: 7/8" HOLE PLUG
160	A0653Y01	6	CONTACT BLOCK	: 2 N.O. CONTACTS BLOCK
170	A0653Y03	1	CONTACT BLOCK	: 1N.O./ 1N.C. CONTACTS BLOCK
180	A0655Y07	6	SWITCH, PUSHBUTTON	: LIGHTED MAINTAINED PUSHBUTTON (YELLOW)
190	A1920Y03	1	DECAL, INSERT	: WORKLIGHT GRAPHIC
200	A1920Y06	2	DECAL, INSERT	: HEADLIGHT GRAPHIC
210	A1920Y07	2	DECAL, INSERT	: WINDSHIELD WIPER GRAPHIC
220	A3993Y01	1	LIGHT, INDICATOR	: RED LENS, 24V INCANDESCENT
230	A3993Y03	2	LIGHT, INDICATOR	: YELLOW LENS, 24V INCANDESCENT
240	A9264Y06	3	WASHER, ANTI ROTATION	: ANTI ROTATION WASHER
250	A9264Y08	2	SWITCH, LENS	: RED RECTANGLE SWITCH LENS
260	A9264Y09	1	SWITCH, LENS	: ORANGE RECTANGLE SWITCH LENS
270	A9264Y17	3	SWITCH, PUSHBUTTON	: 1 NO 1 NC , FORM Z SWITCH W/ LIGHT
280	A9297Y01	20 FT	WIRE	: 20AWG - WHITE WIRE TYPE-SXL
290	A9297Y03	50 FT	WIRE	: 16 AWG - WHITE WIRE TYPE-SXL
300	B0971T06	1	DIN RAIL	: 14.75" DIN RAIL
310	F018229	15	TY-RAP	: SMALL TY-RAP 3 1/2"
320	F018255	10 FT	WIRE	: 20AWG / RED, TYPE MTW
330	F018256	10 FT	WIRE	: 20 AWG / GREEN
340	F020984	7	TIE MOUNT	: USED WITH TY-RAP
350	F040134	14	DECAL	: COMPONENT LABEL
360	F041270	2	END STOP	: END STOP FOR ALL DIN RAIL
370	H1828Y45	1	DECAL, INSERT	: JUPITER ON DECAL INSERT
380	H1828Y47	1	DECAL, INSERT	: ENGINE WARNING DECAL INSERT
390	H1828Y59	1	DECAL, INSERT	: WAIT TO START DECAL INSERT

NOTES

1. USE WAGO PEN TO MARK F040134 DECAL AND 4016767 DECAL PER DRAWING. APPLY AS SHOWN.
2. COVER NOT SHOWN IN ALL VIEWS FOR CLARITY.
3. APPLY TERMINALS USING RATCHET TYPE CRIMP TOOL.
4. USE F018229 TYRAPS AND F020984 TIE MOUNT AS REQUIRED TO BUNDLE WIRES SECURELY.
5. ROUTE WIRES PER DIAGRAM AND WIRE CHART. MAKE ALL CORNERS AS SQUARE AS POSSIBLE.
6. LABEL 4011819 TERMINAL BLOCK WITH 4016767 DECAL
7. MARK WIRES PER HTT W.I. 18525
8. DO NOT USE FERRULE TERMINALS WITH TERMINAL BLOCKS
9. USE F040134 DECAL TO LABEL CABLE GRIP HOLES ON INSIDE OF ENCLOSURE AS SHOWN.
10. ALL CABLE AND WIRE LENGTHS ARE IN FEET.

WIRING CHART

RUN	WIRE	SIZE	COLOR	FROM	TERM NO.	TO	TERM NO.	PART NO
1	000	16 AWG	Green	S2225:-X1	-	TB10:36	-	3406649
2	000	16 AWG	Green	S2290:-X1	-	TB10:37	-	3406649
3	000	16 AWG	Green	S2270:-X1	-	TB10:36	-	3406649
4	000	16 AWG	Green	S2245:-X1	-	TB10:37	-	3406649
5	000	16 AWG	Green	S1285:-X1	-	TB10:40	-	3406649
6	000	16 AWG	Green	S2169:-X1	-	TB10:38	-	3406649
7	000A	16 AWG	Green	DS1600:-X1	-	TB10:6	-	3406649
8	000B	16 AWG	Green	DS1610:-X1	-	TB10:7	-	3406649
9	000C	16 AWG	Green	DS1620:-X1	-	TB10:8	-	3406649
10	000	20 AWG	Green	SJ06357:-X1	SOLDER	TB10:39	-	F018256
11	000	20 AWG	Green	SJ06290:-X1	SOLDER	TB10:38	-	F018256
12	000	20 AWG	Green	SJ06324:-X1	SOLDER	TB10:39	-	F018256
13	1245	16 AWG	Red	DS1600:+X2	-	TB10:5	-	3406646
14	1245	16 AWG	Red	DS1610:+X2	-	TB10:5	-	3406646
15	1245	16 AWG	Red	DS1620:+X2	-	TB10:5	-	3406646
16	1260	16 AWG	Red	S1285:13-1	-	TB10:1	-	3406646
17	1260	16 AWG	Red	S1250:BAT	-	TB10:1	-	3406646
18	1260	16 AWG	Red	S1285:13-1	-	S1285:23-1	-	3406646
19	2170	16 AWG	Red	S2169:13	-	TB10:11	-	3406646
20	2170	16 AWG	Red	S2245:13	-	TB10:12	-	3406646
21	2170	16 AWG	Red	S2270:13	-	TB10:12	-	3406646
22	2170	16 AWG	Red	S2290:13	-	TB10:13	-	3406646
23	2170	16 AWG	Red	S2225:13	-	TB10:11	-	3406646
24	2170	16 AWG	Red	S2169:23	-	S2169:13	-	3406646
25	2170	16 AWG	Red	S2245:23	-	S2245:13	-	3406646
26	2170	16 AWG	Red	S2225:23	-	S2225:13	-	3406646
27	2170	16 AWG	Red	S2270:13	-	S2270:23	-	3406646
28	2170	16 AWG	Red	S2290:23	-	S2290:13	-	3406646
29	2290	16 AWG	Red	S2290:+X2	-	S2290:14	-	3406646
30	3485	20 AWG	Red	SJ06357:14	SOLDER	TB10:22	-	F018255
31	3485	20 AWG	Red	SJ06290:14	SOLDER	TB10:22	-	F018255
32	3485	20 AWG	Red	SJ06324:14	SOLDER	TB10:22	-	F018255
33	1240	16 AWG	White	S1250:ACC	-	TB10:2	-	3407024
34	1262	16 AWG	White	S1250:IGN	-	TB10:3	-	3407024
35	1265	16 AWG	White	S1250:ST	-	TB10:4	-	3407024
36	1265	16 AWG	White	S1285:21-1	-	TB10:4	-	3407024
37	1268	16 AWG	White	S1285:22-1	-	TB10:32	-	3407024
38	1288	16 AWG	White	S1285:+X2	-	S1285:14-1	-	3407024
39	1295	16 AWG	White	S1285:24-1	-	TB10:10	-	3407024
40	2172	16 AWG	White	S2169:14	-	S2169:+X2	-	3407024
41	2180	16 AWG	White	S2169:24	-	TB10:15	-	3407024
42	2230	16 AWG	White	S2225:14	-	S2225:+X2	-	3407024
43	2240	16 AWG	White	S2225:24	-	TB10:17	-	3407024
44	2250	16 AWG	White	S2245:+X2	-	S2245:14	-	3407024
45	2260	16 AWG	White	S2245:24	-	TB10:18	-	3407024
46	2270	16 AWG	White	S2270:+X2	-	S2270:14	-	3407024
47	2280	16 AWG	White	S2270:24	-	TB10:19	-	3407024
48	2300	16 AWG	White	S2290:24	-	TB10:20	-	3407024
49	J06208	20 AWG	White	SJ06290:+X2	SOLDER	SJ06290:13	SOLDER	F018251
50	J06208	20 AWG	White	SJ06290:13	SOLDER	TB10:23	-	F018251
51	J06233	20 AWG	White	SJ06324:+X2	SOLDER	SJ06324:13	SOLDER	F018251
52	J06233	20 AWG	White	SJ06324:13	SOLDER	TB10:24	-	F018251
53	J06258	20 AWG	White	SJ06357:+X2	SOLDER	SJ06357:13	SOLDER	F018251
54	J06258	20 AWG	White	SJ06357:13	SOLDER	TB10:25	-	F018251

JUMPER CHART

RUN	FROM	TO	PART NO.
1	TB10:11	TB10:14	4011823
2	TB10:36	TB10:40	4011824

70 / 1

80 / 1

CONFIDENTIAL

©COPYRIGHT 2011 HARSCO. THIS DRAWING OR DOCUMENT IS THE PROPERTY OF HARSCO AND EMBODIES CONFIDENTIAL INFORMATION, TRADE SECRET INFORMATION, AND/OR KNOW-HOW THAT IS THE PROPERTY OF HARSCO. BY ACCEPTING THIS DRAWING OR DOCUMENT, THE RECIPIENT AGREES (1) NOT TO PROVIDE, OR OTHERWISE MAKE AVAILABLE, THE DRAWING OR DOCUMENT, OR ANY INFORMATION OR KNOW-HOW EMBODIED THEREIN, TO ANY THIRD PARTY AND (2) NOT TO REPRODUCE OR USE THE DRAWING OR DOCUMENT TO MANUFACTURE ANY APPARATUS OR DEVICE, WITHOUT THE PRIOR WRITTEN AUTHORIZATION OF HARSCO.

CHANGE #		REVISION	DR	DATE
EC501056	A	NEW RELEASE	CJW	05/11
EC501387	B	CHANGED RUN 16 FROM TB10:9 TO TB10:1	CJW	06/11
EC502003	C	UPDATED SECTION VIEW B-B SHT 2 WITH MOD7230	CJW	09-22-11
EC502851	D	ITEM 100 WAS QTY 1, NOW "REF" ITEM	CJW	02-08-12

DRAWING TITLE/DESCRIPTION:
ECP ASSEMBLY
Bill Of Material / Wiring

MACHINE TYPE-MODEL:
MARK IV

E3 PROJECT FILE NAME:
MARK IV HD_9

SHEET NUMBER: 1
NUMBER OF JUPITER SHEETS: -
TOTAL NUMBER OF SHEETS: 3

DRAWN BY: CJW
REL. DATE: 05/11
SIZE: D
SCALE:

HARSCO RAIL

E3 DRAWING

5007953

SECTION B-B

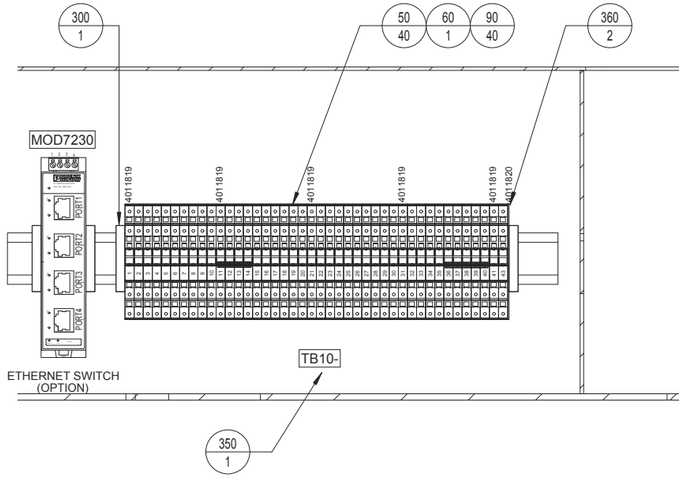

SECTION A-A

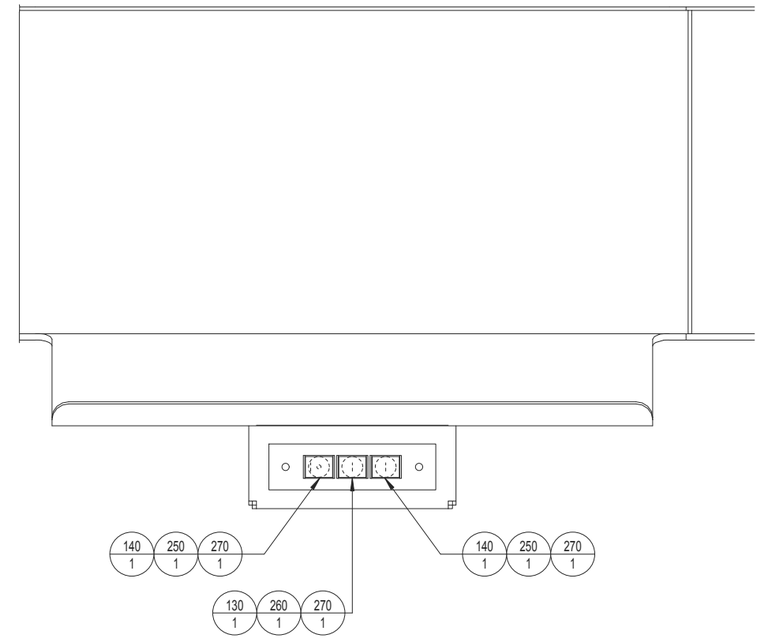

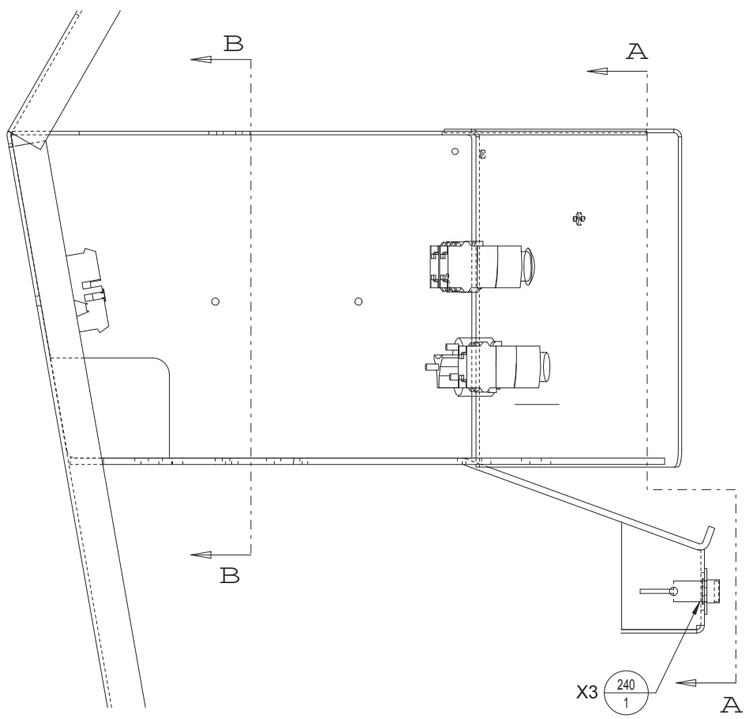

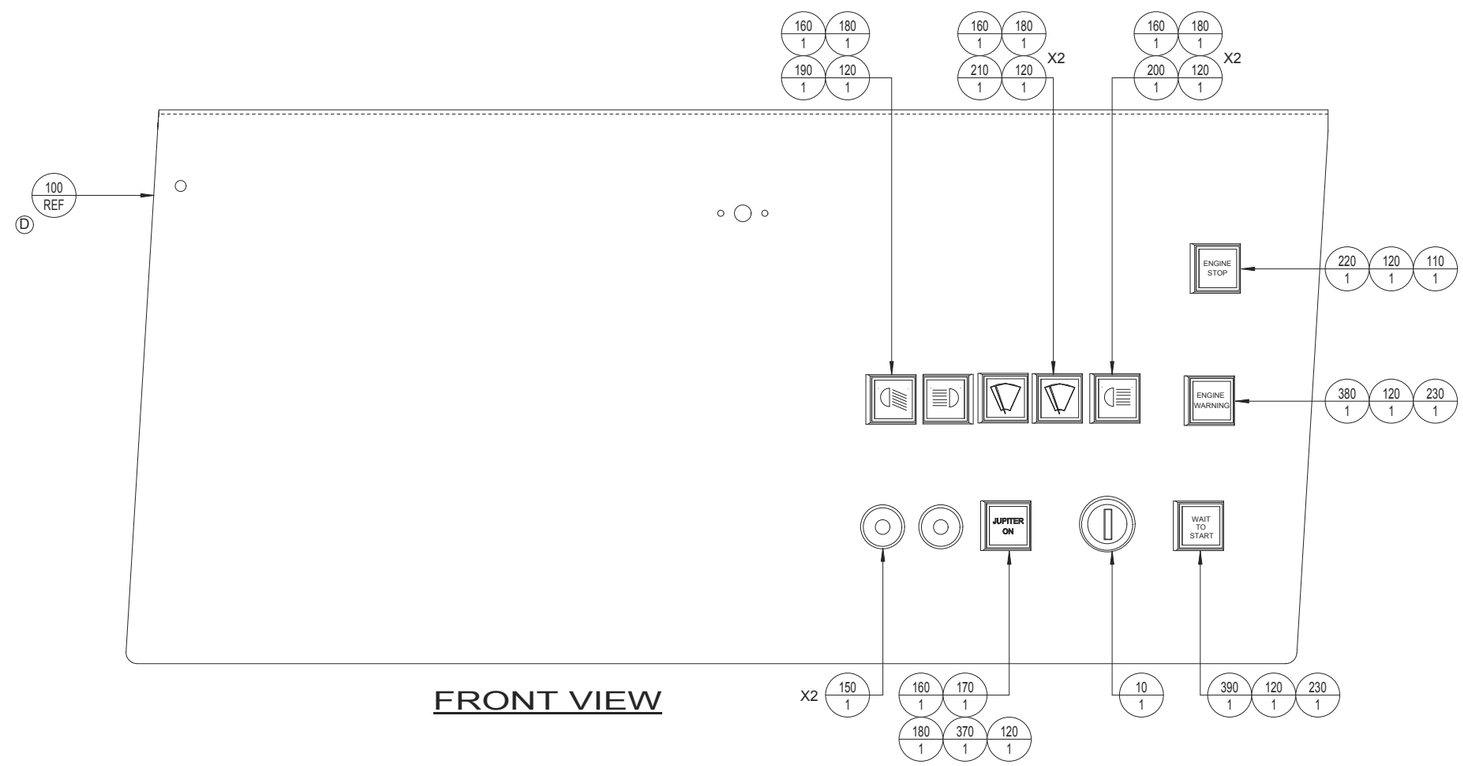

FRONT VIEW

CONFIDENTIAL

©COPYRIGHT 2011 HARSCO. THIS DRAWING OR DOCUMENT IS THE PROPERTY OF HARSCO AND EMBODIES CONFIDENTIAL INFORMATION, TRADE SECRET INFORMATION, AND/OR KNOW-HOW THAT IS THE PROPERTY OF HARSCO. BY ACCEPTING THIS DRAWING OR DOCUMENT, THE RECIPIENT AGREES (1) NOT TO PROVIDE, OR OTHERWISE MAKE AVAILABLE, THE DRAWING OR DOCUMENT, OR ANY INFORMATION OR KNOW-HOW EMBODIED THEREIN, TO ANY THIRD PARTY AND (2) NOT TO REPRODUCE OR USE THE DRAWING OR DOCUMENT TO MANUFACTURE ANY APPARATUS OR DEVICE, WITHOUT THE PRIOR WRITTEN AUTHORIZATION OF HARSCO.

CHANGE #		REVISION	DR	DATE
EC501056	A	NEW RELEASE	CJW	05/11
EC501387	B	CHANGED RUN 16 FROM TB10:9 TO TB10:1	CJW	06/11
EC502003	C	UPDATED SECTION VIEW B-B SHT 2 WITH MOD7230	CJW	09-22-11
EC502851	D	ITEM 100 WAS QTY 1, NOW "REF" ITEM	CJW	02-08-12

DRAWING TITLE/DESCRIPTION:
ECP ASSEMBLY
Assembly

MACHINE TYPE-MODEL:
MARK IV

E3 PROJECT FILE NAME:
MARK IV HD_9

SHEET NUMBER: 2
NUMBER OF JUPITER SHEETS: -
TOTAL NUMBER OF SHEETS: 3

DRAWN BY: CJW
REL. DATE: 05/11
SIZE: D
SCALE:

HARSCO RAIL

E3 DRAWING

5007953

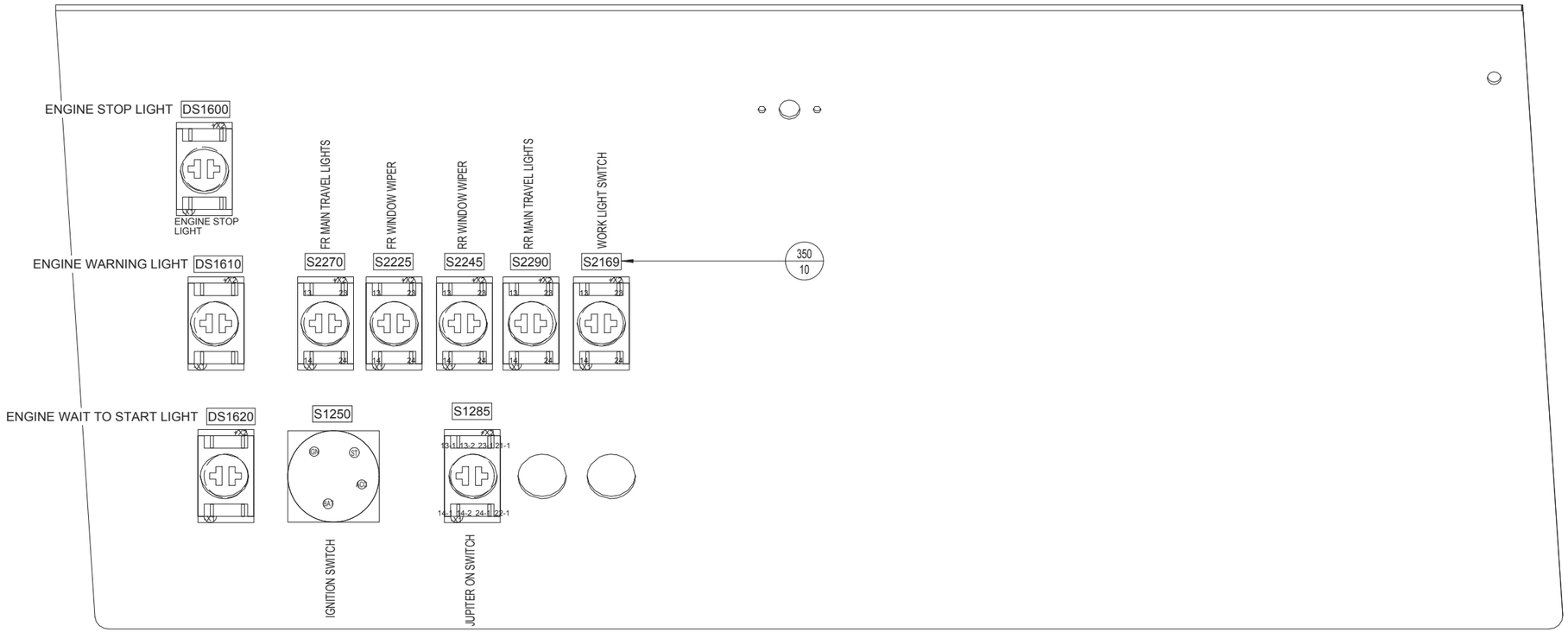

BACK OF KEYBOARD SUPPORT

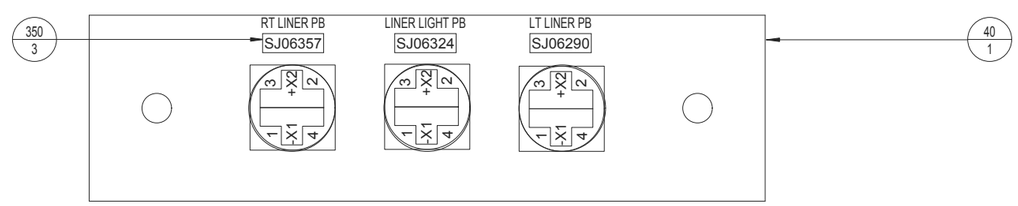

BACK OF DRAWER BOTTOM FOR LIGHTS

CONFIDENTIAL

©COPYRIGHT 2011 HARSCO. THIS DRAWING OR DOCUMENT IS THE PROPERTY OF HARSCO AND EMBODIES CONFIDENTIAL INFORMATION, TRADE SECRET INFORMATION, AND/OR KNOW-HOW THAT IS THE PROPERTY OF HARSCO. BY ACCEPTING THIS DRAWING OR DOCUMENT, THE RECIPIENT AGREES (1) NOT TO PROVIDE, OR OTHERWISE MAKE AVAILABLE, THE DRAWING OR DOCUMENT, OR ANY INFORMATION OR KNOW-HOW EMBODIED THEREIN, TO ANY THIRD PARTY AND (2) NOT TO REPRODUCE OR USE THE DRAWING OR DOCUMENT TO MANUFACTURE ANY APPARATUS OR DEVICE, WITHOUT THE PRIOR WRITTEN AUTHORIZATION OF HARSCO.

CHANGE #		REVISION	DR	DATE
EC501056	A	NEW RELEASE	CJW	05/11
EC501387	B	CHANGED RUN 16 FROM TB10:9 TO TB10:1	CJW	06/11
EC502003	C	UPDATED SECTION VIEW B-B SHT 2 WITH MOD7230	CJW	09-22-11
EC502851	D	ITEM 100 WAS QTY 1, NOW "REF" ITEM	CJW	02-08-12

DRAWING TITLE/DESCRIPTION: ECP ASSEMBLY Assembly

MACHINE TYPE-MODEL: MARK IV

E3 PROJECT FILE NAME: MARK IV HD_9

SHEET NUMBER: 3

NUMBER OF JUPITER SHEETS: -

TOTAL NUMBER OF SHEETS: 3

DRAWN BY: CJW

REL. DATE: 05/11

SIZE: D

SCALE:

HARSCO RAIL

E3 DRAWING

5007953

PRODUCT STRUCTURE

ITEM	PART #	QTY	PART DESCRIPTION	
10	164730	1	CABLE GRIP	: CABLE RANGE 0.300"-0.400"
20	280104-5	10FT	WIRE	: 18 AWG WIRE, GREEN
30	4011819	25	TERMINAL BLOCK	: 20-10AWG, 4 CONDUCTOR, DIN RAIL, GRAY
40	4011820	1	TERMINAL BLOCK, END PLATE	: FOR 4011819 TERMINAL BLOCK
50	4011823	1	TERMINAL BLOCK, JUMPER	: JUMPER BAR FOR 4 TERMINAL BLOCKS 32A
60	4015369	2	SWITCH, OPERATOR	: JOYSTICK, 4-WAY MOMENTARY
70	4015370	4	CONTACT BLOCK	: 1 N.C. CONTACT
80	4015371	4	CONTACT BLOCK	: 1 N.O. CONTACT
90	4015372	2	SWITCH, FLANGE	: CONTACT BLOCK MOUNTING ADAPTOR
100	4015373	2	SWITCH, RING	: ANTI- ROTATION
110	4016767	0.25	DECAL	: TERMINAL BLOCK MARKER STRIP
© 120	4019171	2	TAGS, CABLE	: PLASTIC CABLE TAG SLEEVE
130	0-3111006-0-25	2	SWITCH, TOGGLE 3P	: 3 POSITION 2 POLE ON/OFF/ON
140	A0055009	16	NUT	: 1/4-20 HEX NUT
150	A0059028	2	WASHER	: 1/4" WASHER
160	A0060006	2	WASHER	: #10 SAE FLAT WASHER
170	A0061008	2	WASHER	: 1/4" LOCK WASHER
180	A0653Y01	3	CONTACT BLOCK	: 2 N.O. CONTACTS BLOCK
190	A0655Y25	1	SWITCH, PUSHBUTTON	: MOMENTARY PUSHBUTTON (YELLOW TOP)
200	A2186Y03	1	SWITCH, OPERATOR	: 3 POSITION SELECTOR SWITCH, MOM
210	A9297Y02	60FT	WIRE	: 18 AWG - WHITE WIRE TYPE-SXL
220	B0971T05	1	DIN RAIL	: 8.24" DIN RAIL, MOUNTING 7.61"
230	B5532Y05	14	SCREW	: 10-32 X 5/8 SCREW W/ WASHER
240	B5532Y09	2	SCREW	: 1/4-20 X 1" SCREW W/ WASHER
250	D2892Y08	1	NAME PLATE	: LHC NAMEPLATE
260	D6045WAD	1	CONSOLE ASSEMBLY	: L/H CONSOLE BOX
270	F001050	14	WASHER	: WROUGHT WASHER #10 (.190)
280	F009594	2	SCREW	: #10-24X5/8 ROUND HEAD MACHINE SCREW ZP
290	F010825	2	NUT	: HEX MS NUT #10 (.190)-32 ZP
© 300	F012388	10FT	CABLE, MULTICONDUCTOR	: 16AWG/2 CONDUCTOR .405 O.D 13A/CONDUCTOR
© 310	F018229	8	TY-RAP	: SMALL TY-RAP 3 1/2"
320	F025837	16	WASHER	: LOCK WASHER #10
330	F026227	1.5	CHAIN	: CHAIN
340	F040134	10	DECAL	: COMPONENT LABEL
350	F040710	40FT	WIRE	: 18 AWG / RED .080 O.D.
360	F041270	2	END STOP	: END STOP FOR ALL DIN RAIL
370	H1694W03	1	NAME PLATE	: LH CONSOLE NAMEPLATE
© 380	5009076	1	KEYPAD, ASSY	: LEFT KEYPAD ASSEMBLY- MKIV HD
© 390	H5897XAC	REF	CABLE ASSEMBLY, RIBBON	: -
400	L422505	7	RING TERMINAL	: 22-18 AWG RING TERMINAL, RED, #4 STUD SIZE, INSULATED
410	L424219	1.5FT	SLEEVING	: 1/2" SLEEVING

WIRING CHART

400 / 7

RUN	WIRE	SIZE	COLOR	FROM	TERM NO.	TO	TERM NO.	PART NO
1	000	18 AWG	Green	S2510:23_2	-	TB17:25	-	280104-5
2	000	18 AWG	Green	S2510:13_2	-	S2510:23_2	-	280104-5
3	2450	18 AWG	Red	S2510:13_1	-	TB17:1	-	F040710
4	2450	18 AWG	Red	S2510:13_1	-	S2510:23_1	-	F040710
5	J02B333	18 AWG	Red	SJ02B334:2.2	-	SJ02B334:4.2	-	F040710
6	J02B333	18 AWG	Red	SJ02B334:3.1	-	SJ02B334:4.2	-	F040710
7	J02B333	18 AWG	Red	SJ02B334:1.1	-	SJ02B334:3.1	-	F040710
8	J02B333	18 AWG	Red	SJ02B334:1.1	-	SJ02B409:1.1	-	F040710
9	J02B333	18 AWG	Red	SJ02B409:4.2	-	SJ02B409:2.2	-	F040710
10	J02B333	18 AWG	Red	SJ02B409:3.1	-	SJ02B409:4.2	-	F040710
11	J02B333	18 AWG	Red	SJ02B409:3.1	-	SJ02B409:1.1	-	F040710
12	J02B333	18 AWG	Red	SJ02B409:2.2	L422505	TB17:13	-	F040710
13	J02B642	18 AWG	Red	SJ02B575:2	-	TB17:19	-	F040710
14	J02B642	18 AWG	Red	SJ02B609:13	-	TB17:19	-	F040710
15	J02B642	18 AWG	Red	SJ02B575:2	L422505	SJ02B542:2	L422505	F040710
16	2510	18 AWG	White	S2510:24_2	-	TB17:3	-	F025957
17	2510	18 AWG	White	S2510:24_2	-	S2510:14_1	-	F025957
18	2515	18 AWG	White	S2510:14_2	-	TB17:2	-	F025957
19	2515	18 AWG	White	S2510:24_1	-	S2510:14_2	-	F025957
20	J02B335	18 AWG	White	SJ02B334:3.2	-	TB17:5	-	F025957
21	J02B350	18 AWG	White	SJ02B334:1.2	-	TB17:6	-	F025957
22	J02B367	18 AWG	White	SJ02B334:2.1	-	TB17:7	-	F025957
23	J02B383	18 AWG	White	SJ02B334:4.1	-	TB17:8	-	F025957
24	J02B408	18 AWG	White	SJ02B409:3.2	-	TB17:9	-	F025957
25	J02B425	18 AWG	White	SJ02B409:1.2	-	TB17:10	-	F025957
26	J02B442	18 AWG	White	SJ02B409:2.1	-	TB17:11	-	F025957
27	J02B458	18 AWG	White	SJ02B409:4.1	-	TB17:12	-	F025957
28	J02B533	18 AWG	White	SJ02B542:1	L422505	TB17:14	-	F025957
29	J02B550	18 AWG	White	SJ02B542:3	L422505	TB17:15	-	F025957
30	J02B567	18 AWG	White	SJ02B575:1	L422505	TB17:16	-	F025957
31	J02B583	18 AWG	White	SJ02B575:3	L422505	TB17:17	-	F025957
32	J02B608	18 AWG	White	SJ02B609:14	-	TB17:18	-	F025957

JUMPER CHART

50 / 1

RUN	FROM	TO	PART NO.
1	TB17:22	TB17:25	4011823

SEAT ACTUATOR MOTOR CABLE B2500 10FT
LHC F012388 SEAT

310 / 2 120 / 2 300 / 10

RUN	COLOR	WIRE #	FROM	TERM NO.	TO	TERM NO.
1	BK	2515	TB17:2	-	M2520:+	-
2	WH	2510	TB17:3	-	M2520:-	-

NOTES

1. USE WAGO PEN TO MARK F040134 DECAL AND 4016767 DECAL PER DRAWING. APPLY AS SHOWN.
2. COVER NOT SHOWN IN ALL VIEWS FOR CLARITY.
3. APPLY TERMINALS USING RATCHET TYPE CRIMP TOOL.
4. USE F018229 TYRAPS AS REQUIRED TO BUNDLE WIRES SECURELY.
5. ROUTE WIRES PER DIAGRAM AND WIRE CHART. MAKE ALL CORNERS AS SQUARE AS POSSIBLE.
6. LABEL 4011819 TERMINAL BLOCK WITH 4016767 DECAL
7. MARK WIRES PER HTT W.I. 18525
8. USE F040134 DECAL TO LABEL CABLE GRIP HOLES ON INSIDE OF ENCLOSURE AS SHOWN.
9. ALL CABLE AND WIRE LENGTHS ARE IN FEET.
10. INSTALL KEYPAD, IT-250. ALL BUTTONS MUST MOVE FREELY AFTER INSTALLATION.
11. CUT ITEM 200 TO 16.5" AND CUT ITEM 270 TO 16". THEN SECURE CHAIN WITH ITEMS 1, 2, 4 AND 11.

CONFIDENTIAL

©COPYRIGHT 2011 HARSCO. THIS DRAWING OR DOCUMENT IS THE PROPERTY OF HARSCO AND EMBODIES CONFIDENTIAL INFORMATION, TRADE SECRET INFORMATION, AND/OR KNOW-HOW THAT IS THE PROPERTY OF HARSCO. BY ACCEPTING THIS DRAWING OR DOCUMENT, THE RECIPIENT AGREES (1) NOT TO PROVIDE, OR OTHERWISE MAKE AVAILABLE, THE DRAWING OR DOCUMENT, OR ANY INFORMATION OR KNOW-HOW EMBODIED THEREIN, TO ANY THIRD PARTY AND (2) NOT TO REPRODUCE OR USE THE DRAWING OR DOCUMENT TO MANUFACTURE ANY APPARATUS OR DEVICE, WITHOUT THE PRIOR WRITTEN AUTHORIZATION OF HARSCO.

CHANGE #		REVISION	DR	DATE
EC501056	A	NEW RELEASE	CJW	05/11
EC501107	B	FIXED JOYSTICK BACKSIDE VIEW AND WIRING	CJW	05/11
EC501352	C	NEW KEYPAD ASSY, UPDATED AS BUILT	CJW	06/11

DRAWING TITLE/DESCRIPTION: LEFT ARMREST ASSEMBLY
Bill Of Material

MACHINE TYPE-MODEL: MARK IV

E3 PROJECT FILE NAME: MARK IV HD

SHEET NUMBER: 1
NUMBER OF JUPITER SHEETS: 0
TOTAL NUMBER OF SHEETS: 6

DRAWN BY: CJW
REL. DATE: 05/11
SIZE: D
SCALE:

HARSCO RAIL

E3 DRAWING

5007954

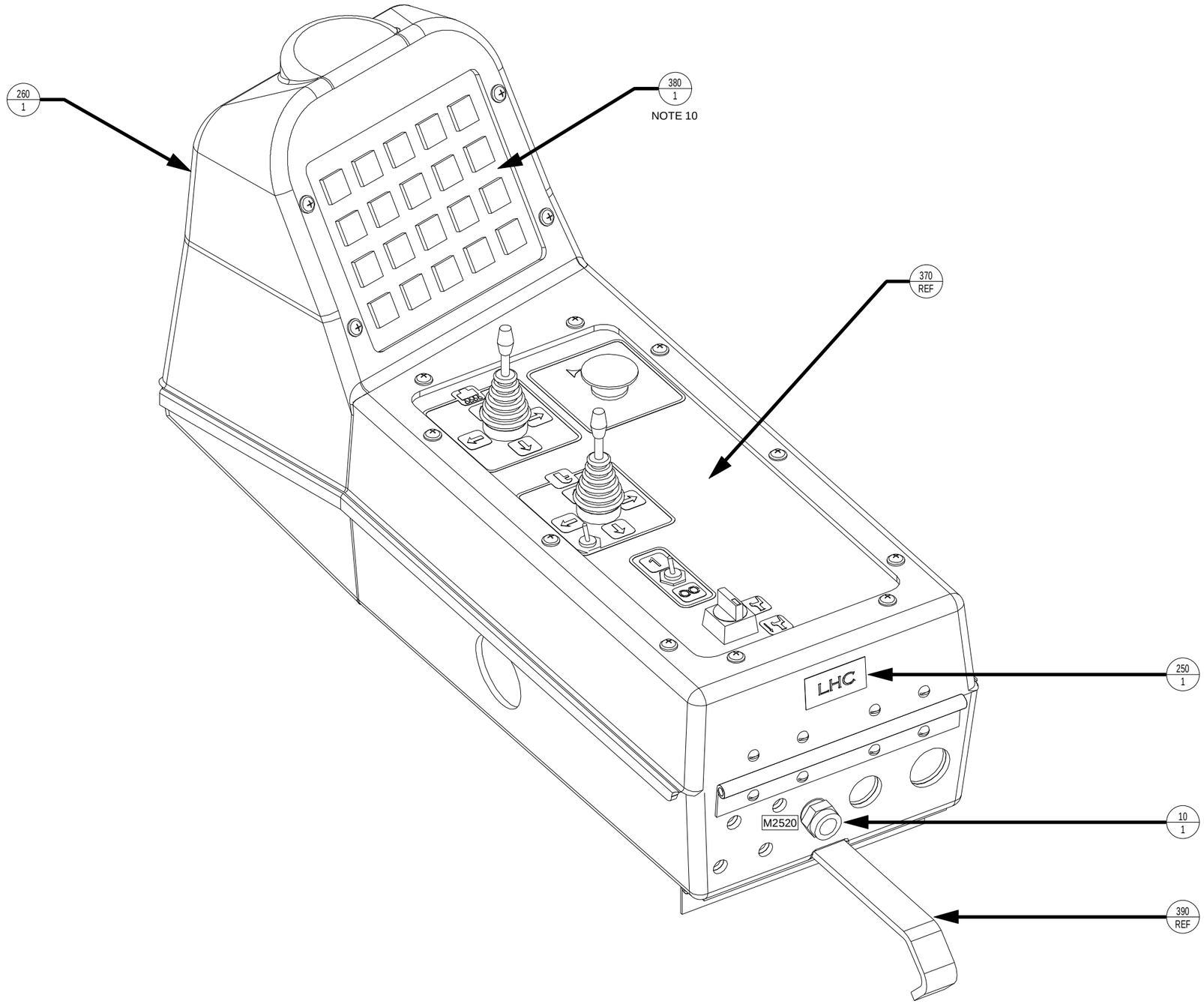

CONFIDENTIAL

©COPYRIGHT 2011 HARSCO. THIS DRAWING OR DOCUMENT IS THE PROPERTY OF HARSCO AND EMBODIES CONFIDENTIAL INFORMATION, TRADE SECRET INFORMATION, AND/OR KNOW-HOW THAT IS THE PROPERTY OF HARSCO. BY ACCEPTING THIS DRAWING OR DOCUMENT, THE RECIPIENT AGREES (1) NOT TO PROVIDE, OR OTHERWISE MAKE AVAILABLE, THE DRAWING OR DOCUMENT, OR ANY INFORMATION OR KNOW-HOW EMBODIED THEREIN, TO ANY THIRD PARTY AND (2) NOT TO REPRODUCE OR USE THE DRAWING OR DOCUMENT TO MANUFACTURE ANY APPARATUS OR DEVICE, WITHOUT THE PRIOR WRITTEN AUTHORIZATION OF HARSCO.

CHANGE #		REVISION	DR	DATE
EC501056	A	NEW RELEASE	CJW	05/11
EC501107	B	FIXED JOYSTICK BACKSIDE VIEW AND WIRING	CJW	05/11
EC501352	C	NEW KEYPAD ASSY, UPDATED AS BUILT	CJW	06/11

DRAWING TITLE/DESCRIPTION:
LEFT ARMREST ASSEMBLY
Assembly

MACHINE TYPE-MODEL:
MARK IV

E3 PROJECT FILE NAME:
MARK IV HD

SHEET NUMBER: 2
NUMBER OF JUPITER SHEETS: 0
TOTAL NUMBER OF SHEETS: 6

DRAWN BY: CJW
REL. DATE: 05/11
SIZE: D
SCALE:

HARSCO RAIL

E3 DRAWING
5007954

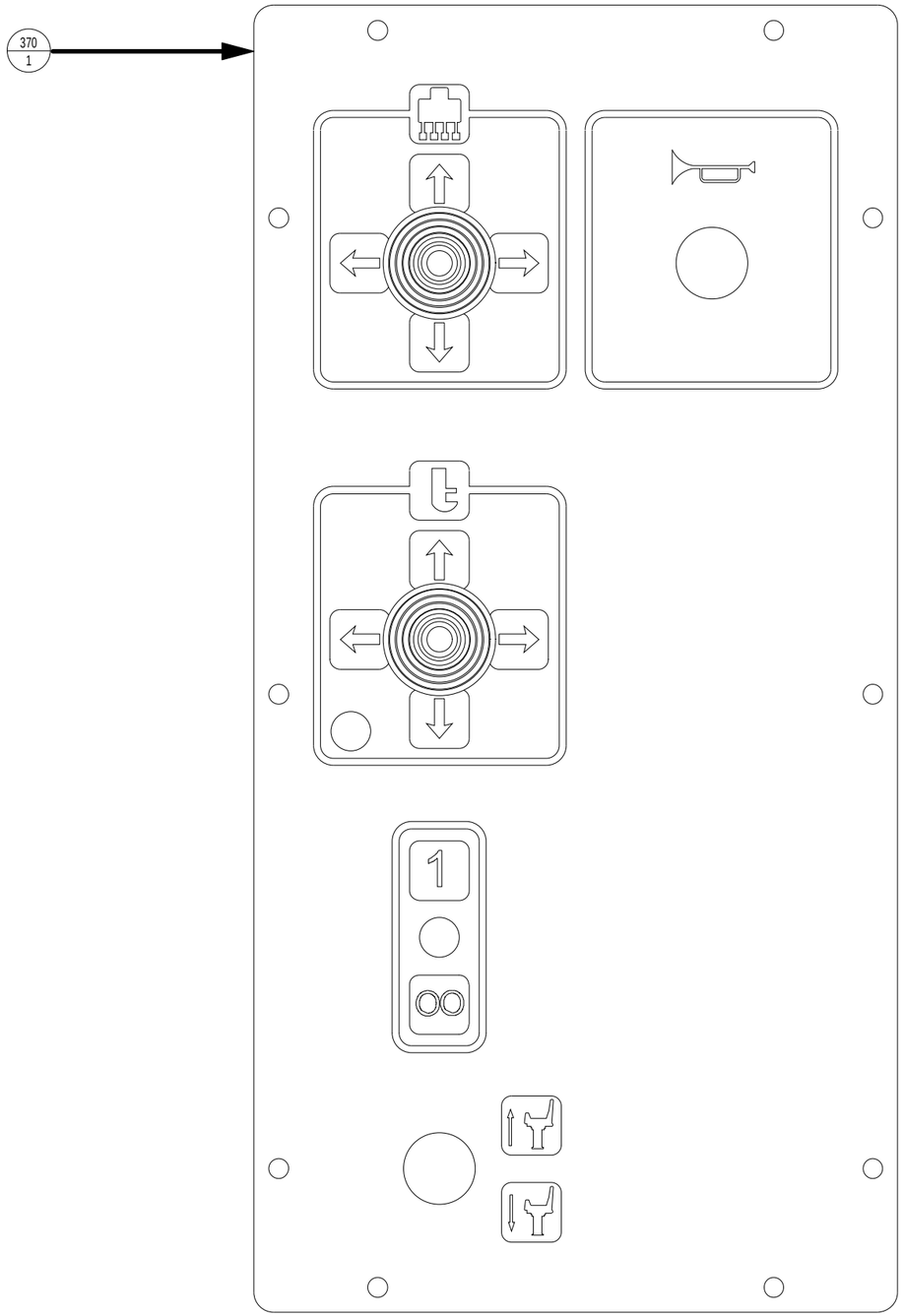

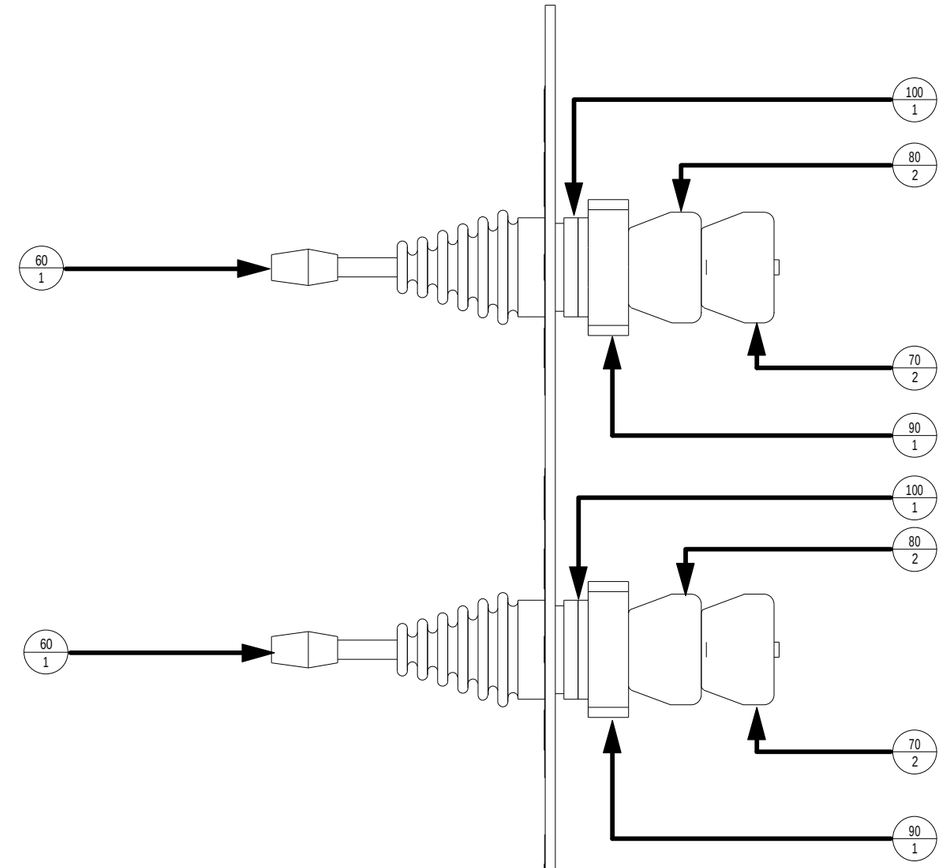

CONFIDENTIAL

©COPYRIGHT 2011 HARSCO. THIS DRAWING OR DOCUMENT IS THE PROPERTY OF HARSCO AND EMBODIES CONFIDENTIAL INFORMATION, TRADE SECRET INFORMATION, AND/OR KNOW-HOW THAT IS THE PROPERTY OF HARSCO. BY ACCEPTING THIS DRAWING OR DOCUMENT, THE RECIPIENT AGREES (1) NOT TO PROVIDE, OR OTHERWISE MAKE AVAILABLE, THE DRAWING OR DOCUMENT, OR ANY INFORMATION OR KNOW-HOW EMBODIED THEREIN, TO ANY THIRD PARTY AND (2) NOT TO REPRODUCE OR USE THE DRAWING OR DOCUMENT TO MANUFACTURE ANY APPARATUS OR DEVICE, WITHOUT THE PRIOR WRITTEN AUTHORIZATION OF HARSCO.

CHANGE #		REVISION	DR	DATE
EC501056	A	NEW RELEASE	CJW	05/11
EC501107	B	FIXED JOYSTICK BACKSIDE VIEW AND WIRING	CJW	05/11
EC501352	C	NEW KEYPAD ASSY, UPDATED AS BUILT	CJW	06/11

DRAWING TITLE/DESCRIPTION:
LEFT ARMREST ASSEMBLY
Assembly

MACHINE TYPE-MODEL:
MARK IV

E3 PROJECT FILE NAME:
MARK IV HD

SHEET NUMBER: 3
NUMBER OF JUPITER SHEETS: 0
TOTAL NUMBER OF SHEETS: 6

DRAWN BY: CJW
REL. DATE: 05/11
SIZE: D
SCALE:

HARSCO RAIL

E3 DRAWING

5007954

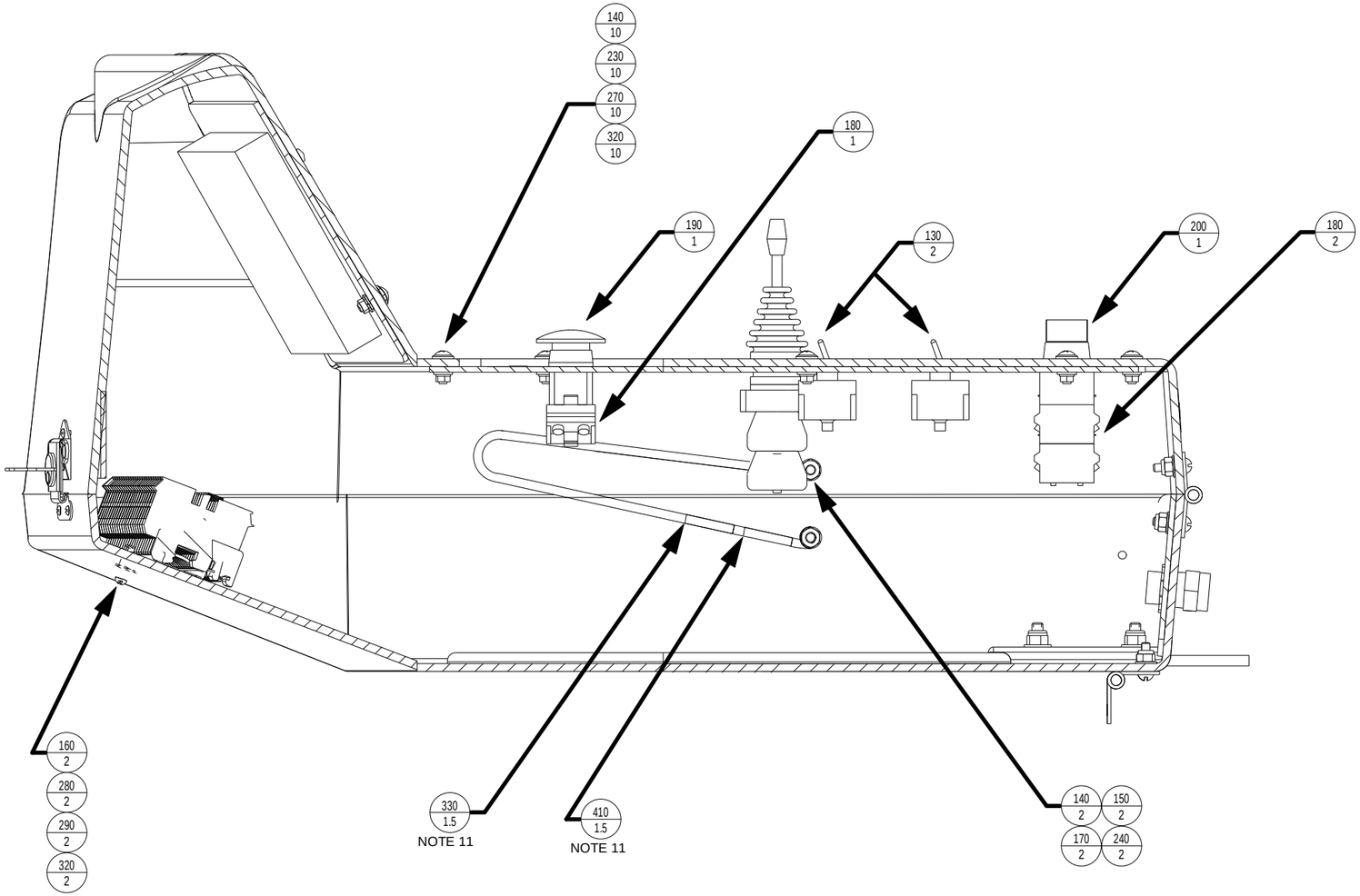

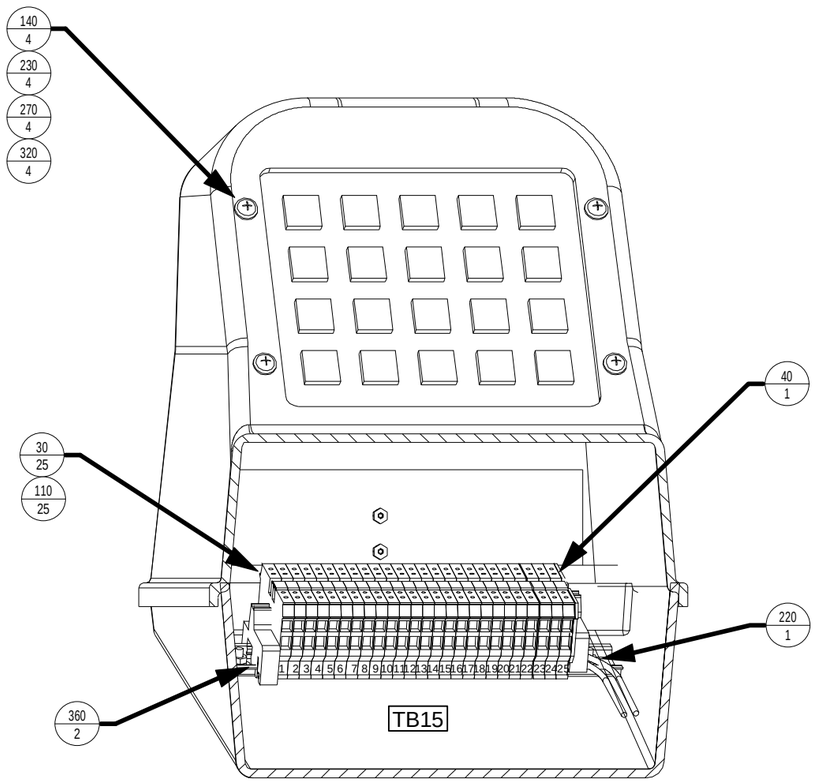

CONFIDENTIAL

©COPYRIGHT 2011 HARSCO. THIS DRAWING OR DOCUMENT IS THE PROPERTY OF HARSCO AND EMBODIES CONFIDENTIAL INFORMATION, TRADE SECRET INFORMATION, AND/OR KNOW-HOW THAT IS THE PROPERTY OF HARSCO. BY ACCEPTING THIS DRAWING OR DOCUMENT, THE RECIPIENT AGREES (1) NOT TO PROVIDE, OR OTHERWISE MAKE AVAILABLE, THE DRAWING OR DOCUMENT, OR ANY INFORMATION OR KNOW-HOW EMBODIED THEREIN, TO ANY THIRD PARTY AND (2) NOT TO REPRODUCE OR USE THE DRAWING OR DOCUMENT TO MANUFACTURE ANY APPARATUS OR DEVICE, WITHOUT THE PRIOR WRITTEN AUTHORIZATION OF HARSCO.

CHANGE #		REVISION	DR	DATE
EC501056	A	NEW RELEASE	CJW	05/11
EC501107	B	FIXED JOYSTICK BACKSIDE VIEW AND WIRING	CJW	05/11
EC501352	C	NEW KEYPAD ASSY, UPDATED AS BUILT	CJW	06/11

DRAWING TITLE/DESCRIPTION: LEFT ARMREST ASSEMBLY Assembly

MACHINE TYPE-MODEL: MARK IV

E3 PROJECT FILE NAME: MARK IV HD

SHEET NUMBER: 4

NUMBER OF JUPITER SHEETS: 0

TOTAL NUMBER OF SHEETS: 6

DRAWN BY: CJW

REL. DATE: 05/11

SIZE: D

SCALE:

HARSCO RAIL

E3 DRAWING

5007954

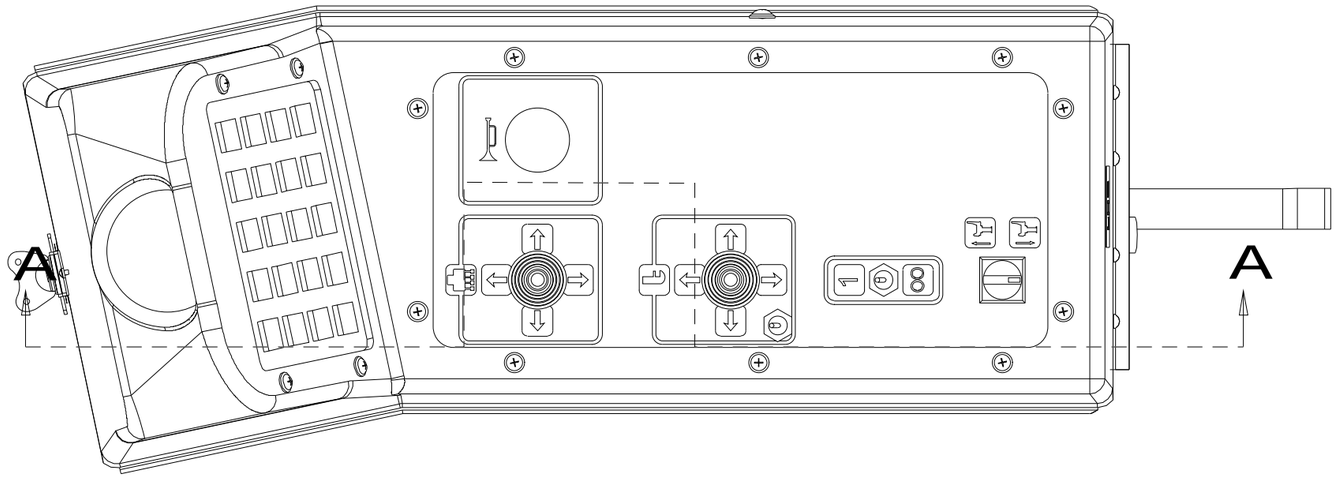

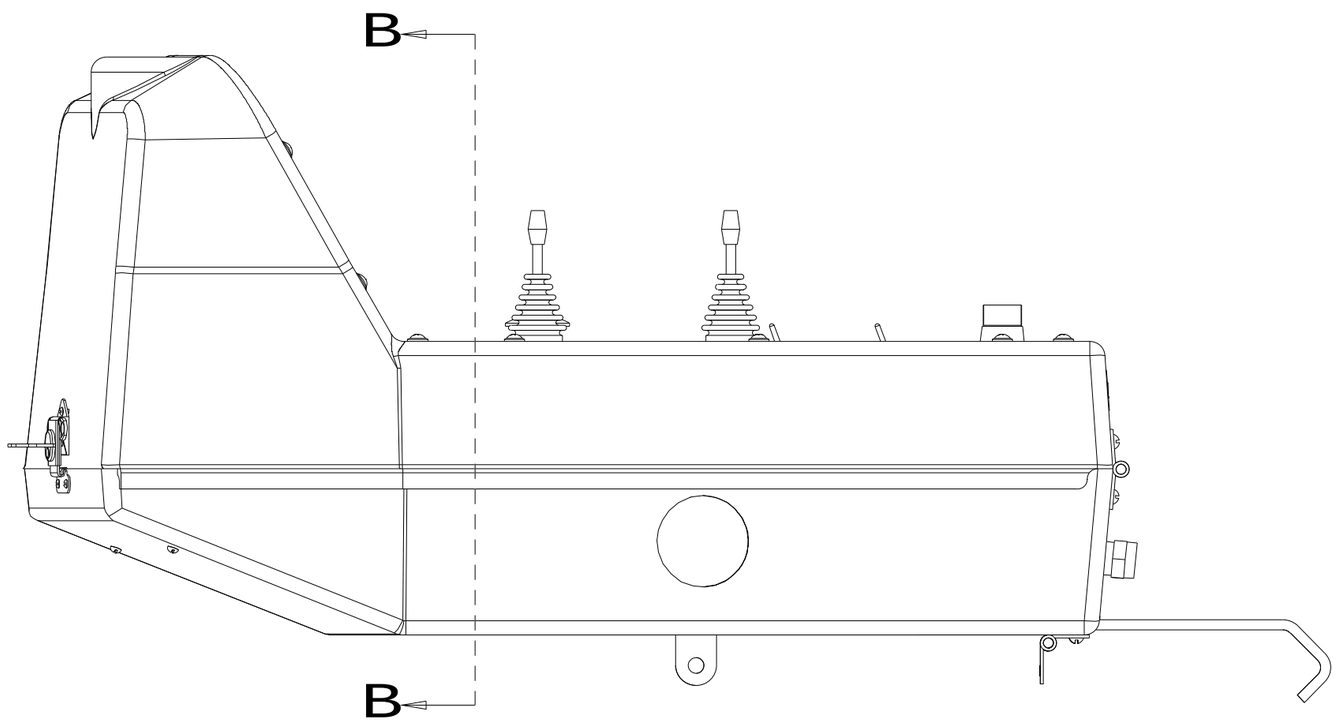

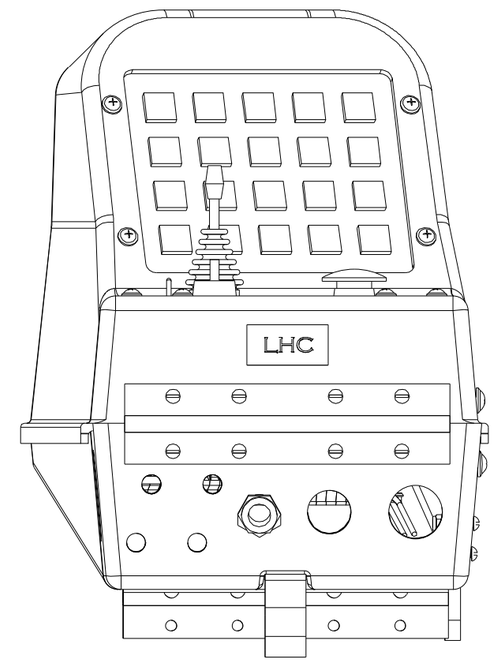

CONFIDENTIAL

©COPYRIGHT 2011 HARSCO. THIS DRAWING OR DOCUMENT IS THE PROPERTY OF HARSCO AND EMBODIES CONFIDENTIAL INFORMATION, TRADE SECRET INFORMATION, AND/OR KNOW-HOW THAT IS THE PROPERTY OF HARSCO. BY ACCEPTING THIS DRAWING OR DOCUMENT, THE RECIPIENT AGREES (1) NOT TO PROVIDE, OR OTHERWISE MAKE AVAILABLE, THE DRAWING OR DOCUMENT, OR ANY INFORMATION OR KNOW-HOW EMBODIED THEREIN, TO ANY THIRD PARTY AND (2) NOT TO REPRODUCE OR USE THE DRAWING OR DOCUMENT TO MANUFACTURE ANY APPARATUS OR DEVICE, WITHOUT THE PRIOR WRITTEN AUTHORIZATION OF HARSCO.

CHANGE #		REVISION	DR	DATE
EC501056	A	NEW RELEASE	CJW	05/11
EC501107	B	FIXED JOYSTICK BACKSIDE VIEW AND WIRING	CJW	05/11
EC501352	C	NEW KEYPAD ASSY, UPDATED AS BUILT	CJW	06/11

DRAWING TITLE/DESCRIPTION:
LEFT ARMREST ASSEMBLY
Assembly

MACHINE TYPE-MODEL:
MARK IV

E3 PROJECT FILE NAME:
MARK IV HD

SHEET NUMBER: 5
NUMBER OF JUPITER SHEETS: 0
TOTAL NUMBER OF SHEETS: 6

DRAWN BY: CJW
REL. DATE: 05/11
SIZE: D
SCALE:

HARSCO RAIL

E3 DRAWING

5007954

BACK VIEW OF NAMEPLATE ASSEMBLY

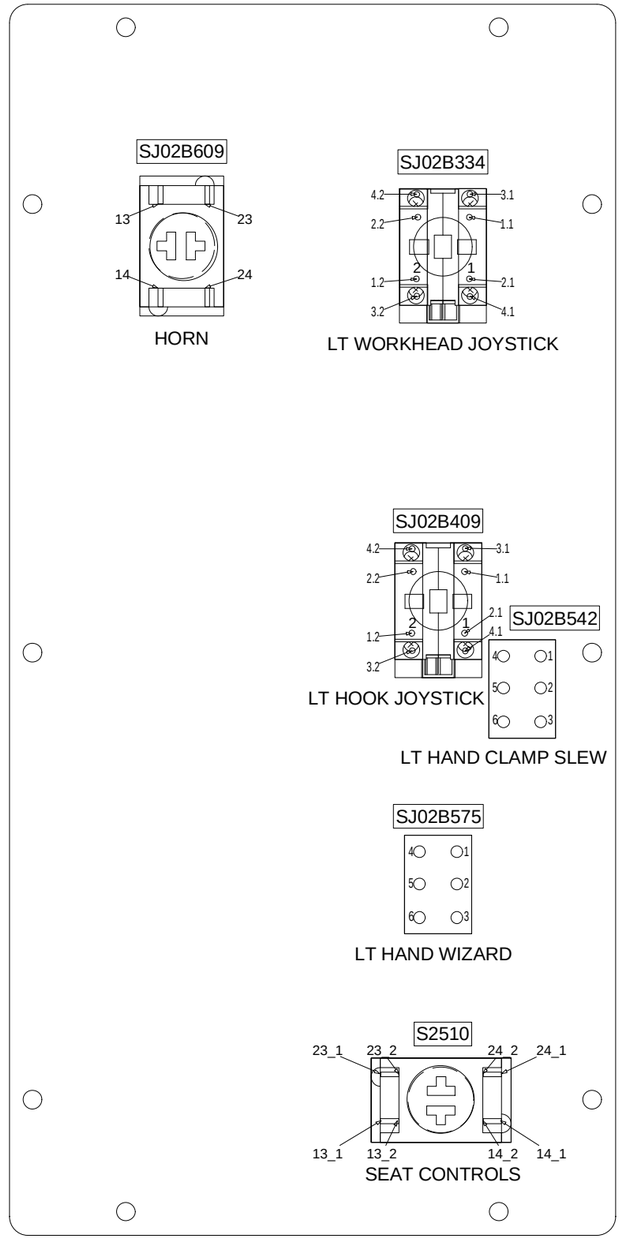

CONFIDENTIAL

©COPYRIGHT 2011 HARSCO. THIS DRAWING OR DOCUMENT IS THE PROPERTY OF HARSCO AND EMBODIES CONFIDENTIAL INFORMATION, TRADE SECRET INFORMATION, AND/OR KNOW-HOW THAT IS THE PROPERTY OF HARSCO. BY ACCEPTING THIS DRAWING OR DOCUMENT, THE RECIPIENT AGREES (1) NOT TO PROVIDE, OR OTHERWISE MAKE AVAILABLE, THE DRAWING OR DOCUMENT, OR ANY INFORMATION OR KNOW-HOW EMBODIED THEREIN, TO ANY THIRD PARTY AND (2) NOT TO REPRODUCE OR USE THE DRAWING OR DOCUMENT TO MANUFACTURE ANY APPARATUS OR DEVICE, WITHOUT THE PRIOR WRITTEN AUTHORIZATION OF HARSCO.

CHANGE #		REVISION	DR	DATE
EC501056	A	NEW RELEASE	CJW	05/11
EC501107	B	FIXED JOYSTICK BACKSIDE VIEW AND WIRING	CJW	05/11
EC501352	C	NEW KEYPAD ASSY, UPDATED AS BUILT	CJW	06/11

DRAWING TITLE/DESCRIPTION:
LEFT ARMREST ASSEMBLY
Nameplate Back View

MACHINE TYPE-MODEL:
MARK IV

E3 PROJECT FILE NAME:
MARK IV HD

SHEET NUMBER: 6
NUMBER OF JUPITER SHEETS: 0
TOTAL NUMBER OF SHEETS: 6

DRAWN BY: CJW
REL. DATE: 05/11
SIZE: D
SCALE:

HARSCO RAIL

E3 DRAWING
5007954

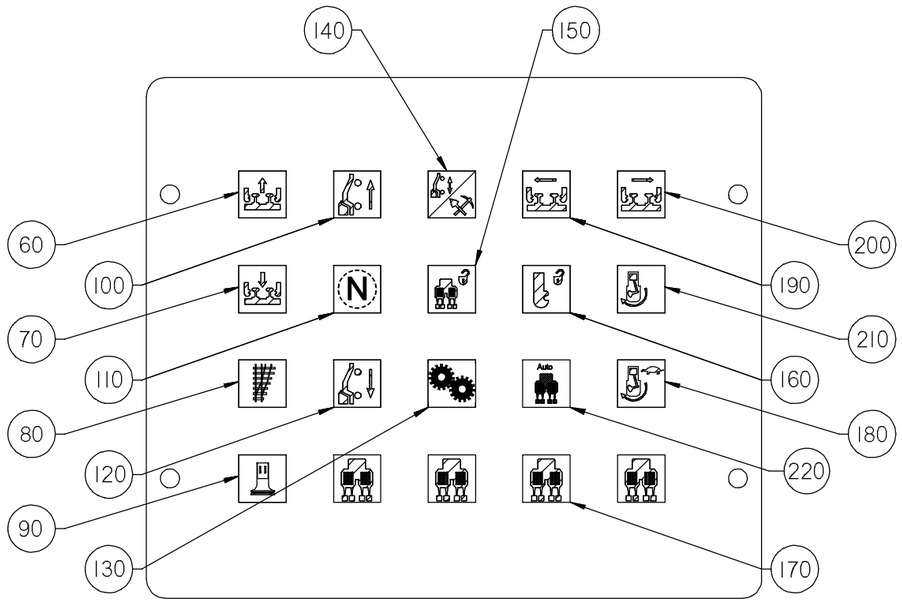

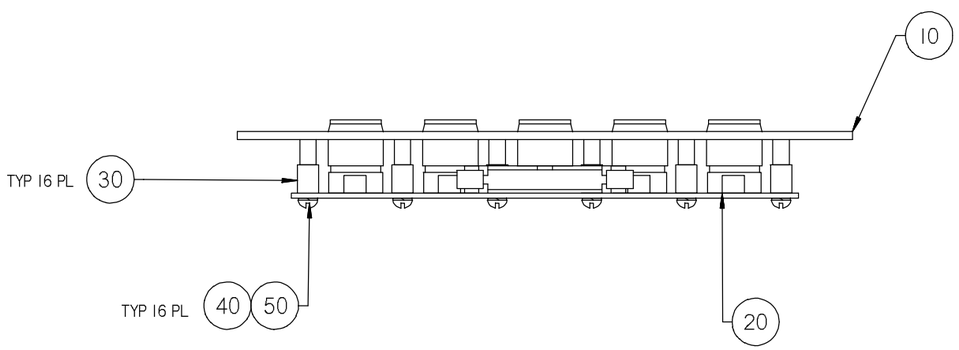

NOTES:
1. ALL BUTTONS MUST MOVE FREELY
2. ITEMS 60 THRU 210: INSTALL ACCORDING TO PICTORAL REPRESENTATION

IT.NO.	PART NO.	DESCRIPTION	QTY
220	4025056	FILM INSERT, AUTO TAMP	1
210	H1828Y16	FILM INSERT, REV UP	1
200	H1828Y15	FILM INSERT, LINE RIGHT	1
190	H1828Y14	FILM INSERT, LINE LEFT	1
180	H1828Y17	FILM INSERT, REV DOWN	1
170	B1443W15	FILM INSERT, WORKHEAD	4
160	H1828Y11	FILM INSERT, CLAMP LOCK	1
150	H1828Y10	FILM INSERT, W/H LOCK	1
140	H1828Y09	FILM INSERT, WORK/TRAVEL	1
130	5009086	FILM INSERT, GEAR	1
120	H1828Y07	FILM INSERT, REV TRAVEL	1
110	H1828Y06	FILM INSERT, NEUTRAL	1
100	H1828Y05	FILM INSERT, FWD TRAVEL	1
90	5007829	FILM INSERT, TIE FINDER	1
80	4013469	FILM INSERT, SWITCH	1
70	4013468	FILM INSERT, A/J OFF	1
60	4013467	FILM INSERT, A/J ON	1
50	A0061004	6 LOCK WASHER	16
40	A0050019	6-32x7/8 SCREW	16
30	B1577Y04	NYLON SPACER	16
20	B0943WAB	RH SWITCH PAD ASSY	1
10	H1827W01	KEYPAD NAMEPLATE	1

Inch
[mm]

CONFIDENTIAL
© COPYRIGHT 2011 HARSCO. THIS DRAWING OR DOCUMENT IS THE PROPERTY OF HARSCO AND EMBODIES CONFIDENTIAL INFORMATION, TRADE SECRET INFORMATION, AND/OR KNOW-HOW THAT IS THE PROPERTY OF HARSCO. BY ACCEPTING THIS DRAWING OR DOCUMENT, THE RECIPIENT AGREES (1) NOT TO PROVIDE, OR OTHERWISE MAKE AVAILABLE, THE DRAWING OR DOCUMENT, OR ANY INFORMATION OR KNOW-HOW EMBODIED THEREIN, TO ANY THIRD PARTY AND (2) NOT TO REPRODUCE OR USE THE DRAWING OR DOCUMENT TO MANUFACTURE ANY APPARATUS OR DEVICE, WITHOUT THE PRIOR WRITTEN AUTHORIZATION OF HARSCO.

NOMINAL SIZE RANGE OVER	TO	INCH PLUS OR MINUS 2 PLACE DECIMAL	3 PLACE DECIMAL	NOMINAL SIZE RANGE OVER	TO	METRIC PLUS OR MINUS 1 PLACE DECIMAL	2 PLACE DECIMAL
0	6	.03	.005	0	150	.5	.13
6	24	.04	.008	150	600	1.0	.20
24	-	.06	.010	600	-	1.5	.25

UNLESS OTHERWISE SPECIFIED ALL MACHINED SURFACES WILL HAVE:
A SURFACE FINISH OF 125 MICROINCHES
ANGULAR TOLERANCE OF +- .50°
CONCENTRICITY WITHIN .010

THIRD ANGLE PROJECTION

UNLESS OTHERWISE SPECIFIED, ALL WELDS SHOULD ADHERE TO THE MOST CURRENT A.W.S WELDING STANDARDS

CHANGE	R/L	REVISION	DR	DATE
EC501352	A	RELEASE	HW	06-15-11

Description: LEFT KEYPAD ASSEMBLY - HD
HARSCO RAIL
Material: SEE PARTS LIST ABOVE
Machine Type: MARK IV
Size: D
Weight: _____
Drawn: hwiggins
Date Drawn: 6/7/02
Part Number: 5009076
Sheet: 1 of 1
SOLID EDGE DRAWING
DO NOT SCALE

PRODUCT STRUCTURE

ITEM	PART #	QTY	PART DESCRIPTION	
10	4011819	26	TERMINAL BLOCK	: 20-10AWG, 4 CONDUCTOR, DIN RAIL, GRAY
20	4011820	1	TERMINAL BLOCK, END PLATE	: FOR 4011819 TERMINAL BLOCK
© 30	4011821	2	TERMINAL BLOCK, JUMPER	: JUMPER BAR FOR 2 TERMINAL BLOCKS 32A
40	4011822	1	TERMINAL BLOCK, JUMPER	: JUMPER BAR FOR 3 TERMINAL BLOCKS 32A
50	4015369	2	SWITCH, OPERATOR	: JOYSTICK, 4-WAY MOMENTARY
60	4015370	4	CONTACT BLOCK	: 1 N.C. CONTACT
70	4015371	4	CONTACT BLOCK	: 1 N.O. CONTACT
80	4015372	2	SWITCH, FLANGE	: CONTACT BLOCK MOUNTING ADAPTOR
90	4015373	2	SWITCH, RING	: ANTI- ROTATION
100	4016221	1	CABLE ASSEMBLY, M12	: 4M W/FEMALE M12 CONNECTOR, PIGTAIL
110	4016767	0.26	DECAL	: TERMINAL BLOCK MARKER STRIP
120	4019171	14	TAGS, CABLE	: PLASTIC CABLE TAG SLEEVE
130	4019452	1	MODULE, DIGITAL OUT	: 8-CHANNEL DIGITAL MODULE, JUPITER 2
140	4022331	2	CABLE ASSEMBLY, M12	: 10M NETWORK CABLE, M12 MALE/FEMALE
150	4022333	2	CABLE ASSEMBLY, M12	: 3 M W/M12 FEMALE CONN
160	4022609	1	ASSEMBLY, BOX	: MARK IV - R/H CONSOLE ASSEMBLY
170	4022817	1	MODULE, MULTIPLEX	: JUPITER 2 INPUT SCANNER ASSY
180	4023642	1	PLATE, MOUNTING	: MOUNTING PLATE FOR JUPITER 2 SCANNER BOARD
190	4024100	1	STRAIN RELIEF BLOCK	: STRAIN RELIEF BLOCK, HIGH DENSITY POLYETHELYNE
200	4025066	4	STANDOFF	: HEX M/F #6-32 STANDOFFS
210	0-3106007-0-03	1	ALARM	: 1-24 AC/DC, 2-12mA
220	0-3110006-0-01	1	SWITCH, PUSHBUTTON	: MUSHROOM HEAD WITH RED LENS
230	0-3111006-0-25	2	SWITCH, TOGGLE 3P	: 3 POSITION 2 POLE ON/OFF/ON
240	A0036011	3	SCREW	: 1/4-20 X 2 1/2 HHCS
250	A0055009	2	NUT	: 1/4-20 HEX NUT
260	A0059028	2	WASHER	: 1/4" WASHER
270	A0060006	2	WASHER	: #10 SAE FLAT WASHER
280	A0061008	2	WASHER	: 1/4" LOCK WASHER
290	B0971T05	1	DIN RAIL	: 8.24" DIN RAIL, MOUNTING 7.61"
300	B5532Y05	14	SCREW	: 10-32 X 5/8 SCREW W/ WASHER
310	B5532Y09	2	SCREW	: 1/4-20 X 1" SCREW W/ WASHER
320	D2892Y09	1	NAME PLATE	: RHC NAMEPLATE
330	D4486Y38	1	NAME PLATE	: EMERGENCY STOP NAMEPLATE
340	F001050	14	WASHER	: WROUGHT WASHER #10 (.190)
350	F001213	4	SCREW	: 1/4-20X1 1/4 HEX HEAD CAP SCREW GR5 ZP
360	F001288	2	SCREW	: 5/16 X 2 1/4 HEX HEAD CAP SCREW GR5 ZP
370	F004635	2	NUT	: 5/16-18 HEX NUT GR5 ZP
380	F009594	2	SCREW	: #10-24X5/8 ROUND HEAD MACHINE SCREW ZP
390	F010825	16	NUT	: HEX MS NUT #10 (.190)-32 ZP
400	F012691	4	SCREW	: #6-32X3/8 ROUND HEAD MACHINE SCREW ZP
410	F013588	7	NUT	: 1/4-20 ELASTIC STOP NUT
420	F014346	6	WASHER	: WROUGHT WASHER 1/4 ZP
430	F018229	20	TY-RAP	: SMALL TY-RAP 3 1/2"
440	F018248K	15FT	CABLE, MULTICONDUCTOR	: 16AWG/20 CONDUCTOR .86 O.D 7A/CONDUCTOR
450	F025837	16	WASHER	: LOCK WASHER #10
460	F026227	1.5	CHAIN	: CHAIN
470	F040115	4	CONTACT BLOCK	: 2 NO CONTACTS
480	F040116	2	CONTACT BLOCK	: 2 NC CONTACT BLOCKS
490	F040119	1	SWITCH, OPERATOR	: 2 POSITION PUSH PULL MAINTAINED
500	F040134	10	DECAL	: COMPONENT LABEL
510	F041270	2	END STOP	: END STOP FOR ALL DIN RAIL
520	H1826WAB	1	KEYPAD, ASSY	: RIGHT KEYPAD ASSEMBLY
530	H5089W01	1	RH CONSOLE NAMEPLATE	: RH CONSOLE NAMEPLATE
540	H5897XAB	1	CABLE ASSEMBLY, RIBBON	: RH KEYPAD RIBBON CABLE
550	L421290	25FT	CABLE, MULTICONDUCTOR	: 16AWG/16 CONDUCTOR .74 O.D 5A
560	L422505	7	RING TERMINAL	: 22-18 AWG RING TERMINAL, RED, #4 STUD SIZE, INSULATED
570	L424219	1.5	SLEEVING	: 1/2" SLEEVING
580	L426050	1	SWITCH, OPERATOR	: JOYSTICK OPERATOR 4 POS. W/O LATCH
© 590	H5897XAC	1	CABLE ASSEMBLY, RIBBON	: LH KEYPAD RIBBON CABLE

NOTES

1. USE WAGO PEN TO MARK F040134 DECAL AND 4016767 DECAL PER DRAWING. APPLY AS SHOWN.
2. COVER NOT SHOWN IN ALL VIEWS FOR CLARITY.
3. APPLY TERMINALS USING RATCHET TYPE CRIMP TOOL.
4. USE F018229 TYRAPS AS REQUIRED TO BUNDLE WIRES SECURELY.
5. ROUTE WIRES PER DIAGRAM AND WIRE CHART. MAKE ALL CORNERS AS SQUARE AS POSSIBLE.
6. LABEL 4011819 TERMINAL BLOCK WITH 4016767 DECAL
7. MARK WIRES PER HTT W.I. 18525
8. DO NOT USE FERRULE TERMINALS WITH TERMINAL BLOCKS
9. USE F040134 DECAL TO LABEL CABLE GRIP HOLES ON INSIDE OF ENCLOSURE AS SHOWN.
10. ALL CABLE AND WIRE LENGTHS ARE IN FEET.
11. INSTALL KEYPAD, IT-290. ALL BUTTONS MUST MOVE FREELY AFTER INSTALLATION

CONFIDENTIAL

©COPYRIGHT 2011 HARSCO. THIS DRAWING OR DOCUMENT IS THE PROPERTY OF HARSCO AND EMBODIES CONFIDENTIAL INFORMATION, TRADE SECRET INFORMATION, AND/OR KNOW-HOW THAT IS THE PROPERTY OF HARSCO. BY ACCEPTING THIS DRAWING OR DOCUMENT, THE RECIPIENT AGREES (1) NOT TO PROVIDE, OR OTHERWISE MAKE AVAILABLE, THE DRAWING OR DOCUMENT, OR ANY INFORMATION OR KNOW-HOW EMBODIED THEREIN, TO ANY THIRD PARTY AND (2) NOT TO REPRODUCE OR USE THE DRAWING OR DOCUMENT TO MANUFACTURE ANY APPARATUS OR DEVICE, WITHOUT THE PRIOR WRITTEN AUTHORIZATION OF HARSCO.

CHANGE #		REVISION	DR	DATE
EC501056	A	NEW RELEASE	CJW	05/11
EC501107	B	FIXED JOYSTICK BACKSIDE VIEW AND WIRING	CJW	05/11
EC501352	C	NEW KEYPAD ASSY, REMOVED JUMPER, UPDATED AS BUILT	CJW	06/11

DRAWING TITLE/DESCRIPTION: RIGHT ARMREST ASSEMBLY
Bill Of Material

MACHINE TYPE-MODEL: MARK IV

E3 PROJECT FILE NAME: MARK IV HD

SHEET NUMBER: 1

NUMBER OF JUPITER SHEETS: 0

TOTAL NUMBER OF SHEETS: 7

DRAWN BY: CJW

REL. DATE: 05/11

SIZE: D

SCALE:

HARSCO RAIL

E3 DRAWING

5007955

WIRING CHART

560 / 7

RUN	WIRE	SIZE	COLOR	FROM	TERM NO.	TO	TERM NO.	PART NO
1	3485	18 AWG	Red	SJ02A800:23.2-TOP	-	TB15:13	-	F040710
2	3485	18 AWG	Red	SJ02A800:13.2-TOP	-	SJ02A800:23.2-TOP	-	F040710
3	3485	18 AWG	Red	SJ02A800:13.2-TOP	-	SJ02A800:13.1-TOP	-	F040710
4	J02A259	18 AWG	Red	MODJ02A125:C1-18	-	TB15:8	-	F040710
5	J02A459	18 AWG	Red	LSJ02A442:+	-	TB15:10	-	F040710
6	J02A459	18 AWG	Red	MODJ02A125:C2-18	-	TB15:10	-	F040710
7	J02A659	18 AWG	Red	SJ02A600:1.1	-	SJ02A525:1.1	-	F040710
8	J02A659	18 AWG	Red	SJ02A525:3.1	-	SJ02A525:4.2	-	F040710
9	J02A659	18 AWG	Red	SJ02A600:4.2	-	SJ02A600:2.2	-	F040710
10	J02A659	18 AWG	Red	SJ02A600:3.1	-	SJ02A600:1.1	-	F040710
11	J02A659	18 AWG	Red	SJ02A525:1.1	-	SJ02A525:3.1	-	F040710
12	J02A659	18 AWG	Red	SJ02A600:4.2	-	SJ02A600:3.1	-	F040710
13	J02A659	18 AWG	Red	SJ02A600:2.2	-	TB15:11	-	F040710
14	J02A659	18 AWG	Red	SJ02A525:4.2	-	SJ02A525:2.2	-	F040710
15	J02A659	18 AWG	Red	MODJ02A125:C3-18	-	TB15:11	-	F040710
16	J02A855	18 AWG	Red	SJ02A800:23.1-BOT	-	SJ02A800:13.1-BOT	-	F040710
17	J02A855	18 AWG	Red	SJ02A800:23.2-BOT	-	SJ02A800:13.2-BOT	-	F040710
18	J02A855	18 AWG	Red	SJ02A800:13.2-BOT	-	SJ02A800:23.1-BOT	-	F040710
19	J02A855	18 AWG	Red	SJ02A800:13.1-BOT	-	TB15:12	-	F040710
20	J02A855	18 AWG	Red	MODJ02A125:C4-18	-	TB15:12	-	F040710
21	J02B133	18 AWG	Red	SJ02B134:2	L422505	TB15:18	-	F040710
22	J02B133	18 AWG	Red	S1330:21-BOT	-	TB15:18	-	F040710
23	J02B133	18 AWG	Red	MODJ02A125:C5-18	-	TB15:18	-	F040710
24	J02B133	18 AWG	Red	SJ02B134:2	L422505	SJ02B167:2	L422505	F040710
25	J02B642	18 AWG	Red	MODJ02A125:C7-18	-	TB15:14	-	F040710
26	1220	18 AWG	White	S1330:12-TOP	-	TB15:2	-	F025957
27	1240	18 AWG	White	S1330:11-TOP	-	TB15:1	-	F025957
28	1332	18 AWG	White	S1330:11-BOT	-	TB15:3	-	F025957
29	1335	18 AWG	White	S1330:12-BOT	-	TB15:4	-	F025957
30	3450	18 AWG	White	SJ02A800:14.1-TOP	-	TB15:17	-	F025957
31	3450	18 AWG	White	SJ02A800:14.2-TOP	-	SJ02A800:14.1-TOP	-	F025957
32	3450	18 AWG	White	SJ02A800:24.2-TOP	-	SJ02A800:14.2-TOP	-	F025957
33	J02A261	18 AWG	White	MODJ02A125:C1-17	-	TB15:7	-	F025957
34	J02A461	18 AWG	White	LSJ02A442:-	-	TB15:9	-	F025957
35	J02A461	18 AWG	White	MODJ02A125:C2-17	-	TB15:9	-	F025957
36	J02A525	18 AWG	White	SJ02A525:3.2	-	MODJ02A125:C3-1	-	F025957
37	J02A550	18 AWG	White	MODJ02A125:C3-2	-	SJ02A525:1.2	-	F025957
38	J02A567	18 AWG	White	SJ02A525:2.1	-	MODJ02A125:C3-3	-	F025957
39	J02A584	18 AWG	White	MODJ02A125:C3-4	-	SJ02A525:4.1	-	F025957
40	J02A609	18 AWG	White	SJ02A600:3.2	-	MODJ02A125:C3-5	-	F025957
41	J02A625	18 AWG	White	MODJ02A125:C3-6	-	SJ02A600:1.2	-	F025957
42	J02A642	18 AWG	White	SJ02A600:2.1	-	MODJ02A125:C3-7	-	F025957
43	J02A661	18 AWG	White	MODJ02A125:C3-8	-	SJ02A600:4.1	-	F025957
44	J02A725	18 AWG	White	MODJ02A125:C4-1	-	SJ02A800:24.2-BOT	-	F025957
45	J02A742	18 AWG	White	SJ02A800:14.2-BOT	-	MODJ02A125:C4-3	-	F025957
46	J02A800	18 AWG	White	MODJ02A125:C4-5	-	SJ02A800:14.1-BOT	-	F025957
47	J02A815	18 AWG	White	SJ02A800:24.1-BOT	-	MODJ02A125:C4-7	-	F025957
48	J02B125	18 AWG	White	MODJ02A125:C5-1	-	SJ02B134:3	L422505	F025957
49	J02B142	18 AWG	White	SJ02B134:1	L422505	MODJ02A125:C5-2	-	F025957
50	J02B158	18 AWG	White	MODJ02A125:C5-3	-	SJ02B167:3	L422505	F025957
51	J02B175	18 AWG	White	SJ02B167:1	L422505	MODJ02A125:C5-4	-	F025957
52	J02B208	18 AWG	White	MODJ02A125:C5-5	-	S1330:22-BOT	-	F025957
53	J02B658	18 AWG	White	MODJ02A125:C7-6	-	TB15:15	-	F025957

JUMPER CHART

30 / 2 — 40 / 1

RUN	FROM	TO	PART NO.
1	TB15:20	TB15:21	4011821
2	TB15:22	TB15:23	4011821
3	TB15:24	TB15:26	4011822

CAN:01 TO CAN:02

RHC — NET1-2 4022331 — CABLE ASSEMBLY, M12 RHC

430 / 2 — 120 / 2 — 140 / 1

RUN	COLOR	WIRE #	FROM	TERM NO.	TO	TERM NO.
1	PK	000W	CAN:02:C-IN	EXISTS	J42:1	-
2	RD	J01525	CAN:02:C-IN	EXISTS	J42:2	-
3	BU	000W	CAN:02:C-IN	EXISTS	J42:3	-
4	WH	J01558	CAN:02:C-IN	EXISTS	J42:4	-
5	BN	J01575	CAN:02:C-IN	EXISTS	J42:5	-
6	SH	**NC**	CAN:02:C-IN	EXISTS	-	-

CAN:02 TO CAN:03

RHC — NET2-3 4022331 — CABLE ASSEMBLY, M12 JUP INSTALL

430 / 2 — 120 / 2 — 140 / 1

RUN	COLOR	WIRE #	FROM	TERM NO.	TO	TERM NO.
1	PU	NET2-3	CAN:02:C-OUT	EXISTS	CAN:03:C-IN	EXISTS

RHC TO LHC CABLE

RHC — RHC_LHC F018248K — 15FT LHC

430 / 2 — 120 / 2 — 440 / 15

RUN	COLOR	WIRE #	FROM	TERM NO.	TO	TERM NO.
1	BK	2450	TB15:5	-	TB17:1	-
2	WH	000	TB15:25	-	TB17:25	-
3	RD	J02B335	MODJ02A125:C6-1	-	TB17:5	-
4	GN	J02B350	MODJ02A125:C6-2	-	TB17:6	-
5	OR	J02B367	MODJ02A125:C6-3	-	TB17:7	-
6	BU	J02B383	MODJ02A125:C6-4	-	TB17:8	-
7	WH/BK	J02B408	MODJ02A125:C6-5	-	TB17:9	-
8	RD/BK	J02B425	MODJ02A125:C6-6	-	TB17:10	-
9	GN/BK	J02B442	MODJ02A125:C6-7	-	TB17:11	-
10	OR/BK	J02B458	MODJ02A125:C6-8	-	TB17:12	-
11	BU/BK	J02B333	MODJ02A125:C6-18	-	TB17:13	-
12	BK/WH	J02B533	MODJ02A125:C7-1	-	TB17:14	-
13	RD/WH	J02B550	MODJ02A125:C7-2	-	TB17:15	-
14	GN/WH	J02B567	MODJ02A125:C7-3	-	TB17:16	-
15	BU/WH	J02B583	MODJ02A125:C7-4	-	TB17:17	-
16	BK/RD	J02B608	MODJ02A125:C7-5	-	TB17:18	-
17	WH/RD	J02B642	TB15:14	-	TB17:19	-
18	OR/RD	1240	TB15:1	-	TB17:20	-
19	BU/RD	000	TB15:24	-	TB17:24	-
20	RD/GN	**NC**	-	-	-	-

RHC TO MCB CABLE

RHC — RHC_MCB L421290 — 25FT MCB

430 / 2 — 120 / 2 — 550 / 25

RUN	COLOR	WIRE #	FROM	TERM NO.	TO	TERM NO.
1	BK	1240	TB15:1	-	TB1:4	-
2	WH	1220	TB15:2	-	TB1:39	-
3	RD	1332	TB15:3	-	TB1:9	-
4	GN	1335	TB15:4	-	TB1:12	-
5	OR	4120	TB15:20	-	TB2:2	-
6	BU	000W	TB15:22	-	TB4:3	-
7	WH/BK	J02A261	TB15:7	-	TB1:33	-
8	RD/BK	2450	TB15:5	-	TB1:19	-
9	GN/BK	J02A259	TB15:8	-	TB1:34	-
10	OR/BK	**NC**	-	-	-	-
11	BU/BK	**NC**	-	-	-	-
12	BK/WH	000	TB15:24	-	TB3:18	-
13	RD/WH	000	TB15:26	-	TB3:19	-
14	GN/WH	**NC**	-	-	-	-
15	BU/WH	**NC**	-	-	-	-
16	BK/RD	**NC**	-	-	-	-

FLOOR CYCLE SWITCH

RHC — S2B640 4016221 — CABLE ASSEMBLY, M12 RHC

430 / 2 — 120 / 2 — 100 / 1

RUN	COLOR	WIRE #	FROM	TERM NO.	TO	TERM NO.
1	WH-1	J02B642	SJ02B675	EXISTS	TB15:14	-
2	WH-2	J02B658	SJ02B675	EXISTS	TB15:15	-
3	WH-3	**NC**	SJ02B675	EXISTS	-	-
4	WH-4	**NC**	SJ02B675	EXISTS	-	-
5	WH-5	**NC**	SJ02B675	EXISTS	-	-

CAN:02 POWER

RHC — J02FP_A 4022333 — CABLE ASSEMBLY, M12 RHC

430 / 2 — 120 / 2 — 150 / 1

RUN	COLOR	WIRE #	FROM	TERM NO.	TO	TERM NO.
1	W-1	4120	CAN:02:FPA	EXISTS	TB15:20	-
2	W-2	4120	CAN:02:FPA	EXISTS	TB15:20	-
3	W-3	000W	CAN:02:FPA	EXISTS	TB15:22	-
4	W-4	000W	CAN:02:FPA	EXISTS	TB15:22	-
5	W-5	**NC**	CAN:02:FPA	EXISTS	-	-

CAN:02 POWER

RHC — J02FP_B 4022333 — CABLE ASSEMBLY, M12 RHC

430 / 2 — 120 / 2 — 150 / 1

RUN	COLOR	WIRE #	FROM	TERM NO.	TO	TERM NO.
1	W-1	4120	CAN:02:FPB	EXISTS	TB15:21	-
2	W-2	4120	CAN:02:FPB	EXISTS	TB15:21	-
3	W-3	000W	CAN:02:FPB	EXISTS	TB15:23	-
4	W-4	000W	CAN:02:FPB	EXISTS	TB15:23	-
5	W-5	**NC**	CAN:02:FPB	EXISTS	-	-

RH KEYPAD RIBBON CABLE

RHC — RH_KYPD H5897XAB — CABLE ASSEMBLY, RIBB RHC

540 / 1

RUN	COLOR	WIRE #	FROM	TERM NO.	TO	TERM NO.
1	BK	RH_KYPD	KEYJ02B725	EXISTS	MODJ02A125:C9	EXISTS

LH KEYPAD RIBBON CABLE

RHC — LH_KYPD H5897XAC — CABLE ASSEMBLY, RIBB RHC

590 / 1

RUN	COLOR	WIRE #	FROM	TERM NO.	TO	TERM NO.
1	BK	LH_KYPD	KEYJ02B809	EXISTS	MODJ02A125:C10	EXISTS

CONFIDENTIAL

©COPYRIGHT 2011 HARSCO. THIS DRAWING OR DOCUMENT IS THE PROPERTY OF HARSCO AND EMBODIES CONFIDENTIAL INFORMATION, TRADE SECRET INFORMATION, AND/OR KNOW-HOW THAT IS THE PROPERTY OF HARSCO. BY ACCEPTING THIS DRAWING OR DOCUMENT, THE RECIPIENT AGREES (1) NOT TO PROVIDE, OR OTHERWISE MAKE AVAILABLE, THE DRAWING OR DOCUMENT, OR ANY INFORMATION OR KNOW-HOW EMBODIED THEREIN, TO ANY THIRD PARTY AND (2) NOT TO REPRODUCE OR USE THE DRAWING OR DOCUMENT TO MANUFACTURE ANY APPARATUS OR DEVICE, WITHOUT THE PRIOR WRITTEN AUTHORIZATION OF HARSCO.

CHANGE #		REVISION	DR	DATE
EC501056	A	NEW RELEASE	CJW	05/11
EC501107	B	FIXED JOYSTICK BACKSIDE VIEW AND WIRING	CJW	05/11
EC501352	C	NEW KEYPAD ASSY, REMOVED JUMPER, UPDATED AS BUILT	CJW	06/11

DRAWING TITLE/DESCRIPTION: RIGHT ARMREST ASSEMBLY Wiring

MACHINE TYPE-MODEL: MARK IV

E3 PROJECT FILE NAME: MARK IV HD

SHEET NUMBER: 2

NUMBER OF JUPITER SHEETS: 0

TOTAL NUMBER OF SHEETS: 7

DRAWN BY: CJW

REL. DATE: 05/11

SIZE: D

SCALE:

HARSCO RAIL

E3 DRAWING

5007955

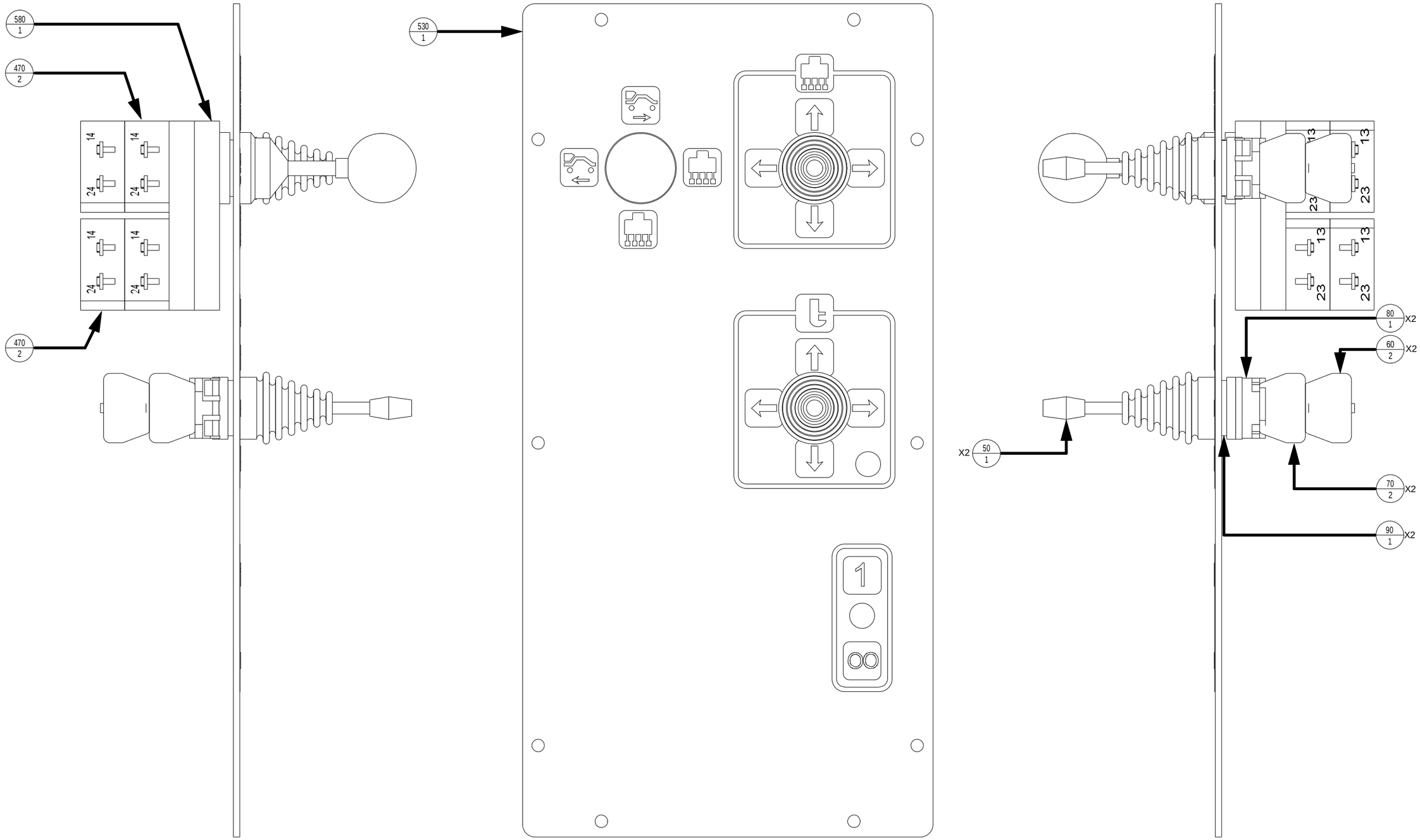

CONFIDENTIAL

©COPYRIGHT 2011 HARSCO. THIS DRAWING OR DOCUMENT IS THE PROPERTY OF HARSCO AND EMBODIES CONFIDENTIAL INFORMATION, TRADE SECRET INFORMATION, AND/OR KNOW-HOW THAT IS THE PROPERTY OF HARSCO. BY ACCEPTING THIS DRAWING OR DOCUMENT, THE RECIPIENT AGREES (1) NOT TO PROVIDE, OR OTHERWISE MAKE AVAILABLE, THE DRAWING OR DOCUMENT, OR ANY INFORMATION OR KNOW-HOW EMBODIED THEREIN, TO ANY THIRD PARTY AND (2) NOT TO REPRODUCE OR USE THE DRAWING OR DOCUMENT TO MANUFACTURE ANY APPARATUS OR DEVICE, WITHOUT THE PRIOR WRITTEN AUTHORIZATION OF HARSCO.

CHANGE #		REVISION	DR	DATE
EC501056	A	NEW RELEASE	CJW	05/11
EC501107	B	FIXED JOYSTICK BACKSIDE VIEW AND WIRING	CJW	05/11
EC501352	C	NEW KEYPAD ASSY, REMOVED JUMPER, UPDATED AS BUILT	CJW	06/11

DRAWING TITLE/DESCRIPTION: RIGHT ARMREST ASSEMBLY Assembly

MACHINE TYPE-MODEL: MARK IV

E3 PROJECT FILE NAME: MARK IV HD

SHEET NUMBER: 3

NUMBER OF JUPITER SHEETS: 0

TOTAL NUMBER OF SHEETS: 7

DRAWN BY: CJW

REL. DATE: 05/11

SIZE: D

SCALE:

HARSCO RAIL

E3 DRAWING

5007955

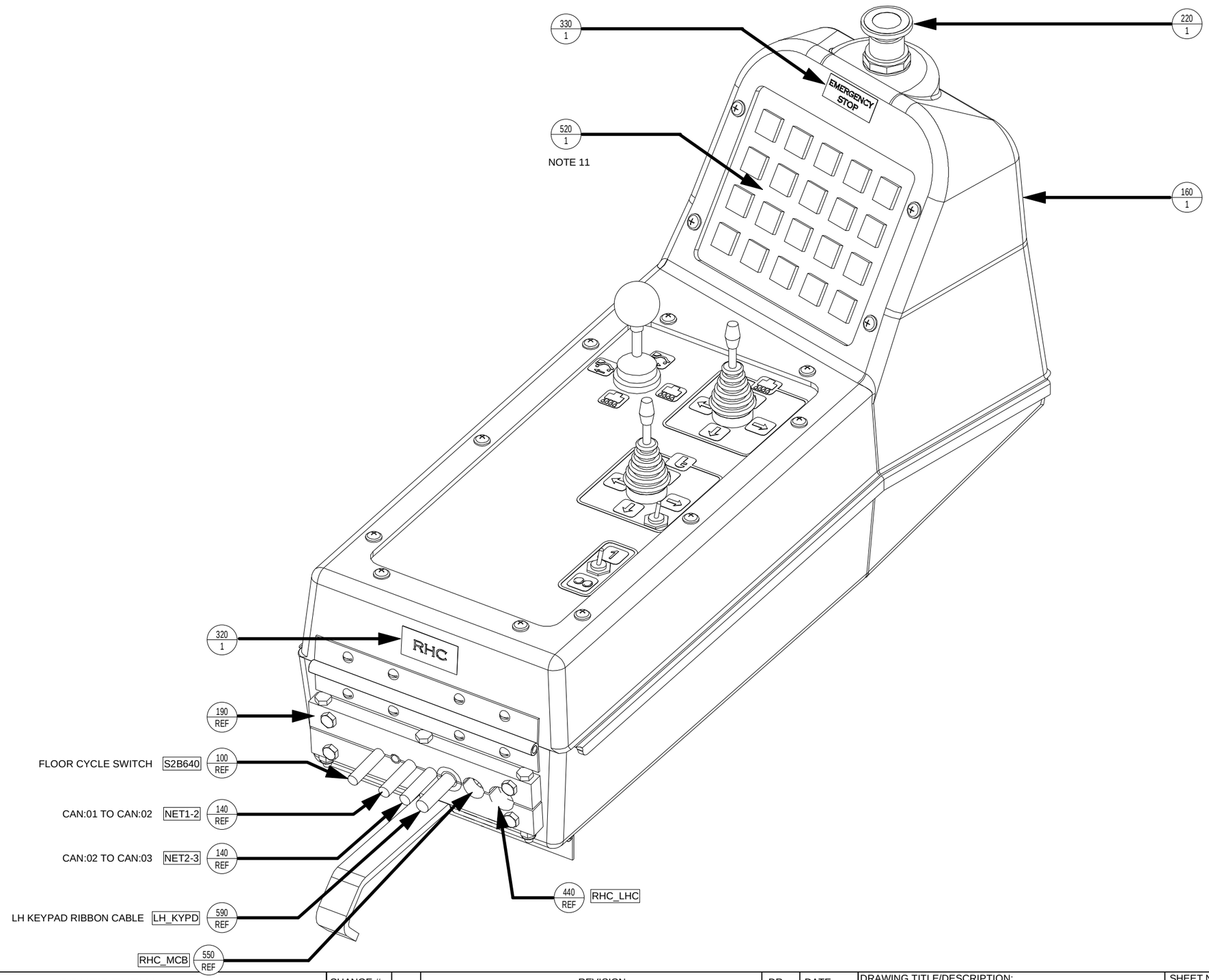

CONFIDENTIAL

©COPYRIGHT 2011 HARSCO. THIS DRAWING OR DOCUMENT IS THE PROPERTY OF HARSCO AND EMBODIES CONFIDENTIAL INFORMATION, TRADE SECRET INFORMATION, AND/OR KNOW-HOW THAT IS THE PROPERTY OF HARSCO. BY ACCEPTING THIS DRAWING OR DOCUMENT, THE RECIPIENT AGREES (1) NOT TO PROVIDE, OR OTHERWISE MAKE AVAILABLE, THE DRAWING OR DOCUMENT, OR ANY INFORMATION OR KNOW-HOW EMBODIED THEREIN, TO ANY THIRD PARTY AND (2) NOT TO REPRODUCE OR USE THE DRAWING OR DOCUMENT TO MANUFACTURE ANY APPARATUS OR DEVICE, WITHOUT THE PRIOR WRITTEN AUTHORIZATION OF HARSCO.

CHANGE #		REVISION	DR	DATE
EC501056	A	NEW RELEASE	CJW	05/11
EC501107	B	FIXED JOYSTICK BACKSIDE VIEW AND WIRING	CJW	05/11
EC501352	C	NEW KEYPAD ASSY, REMOVED JUMPER, UPDATED AS BUILT	CJW	06/11

DRAWING TITLE/DESCRIPTION: RIGHT ARMREST ASSEMBLY Assembly

MACHINE TYPE-MODEL: MARK IV

E3 PROJECT FILE NAME: MARK IV HD

SHEET NUMBER: 4

NUMBER OF JUPITER SHEETS: 0

TOTAL NUMBER OF SHEETS: 7

DRAWN BY: CJW

REL. DATE: 05/11

SIZE: D

SCALE:

HARSCO RAIL

E3 DRAWING

5007955

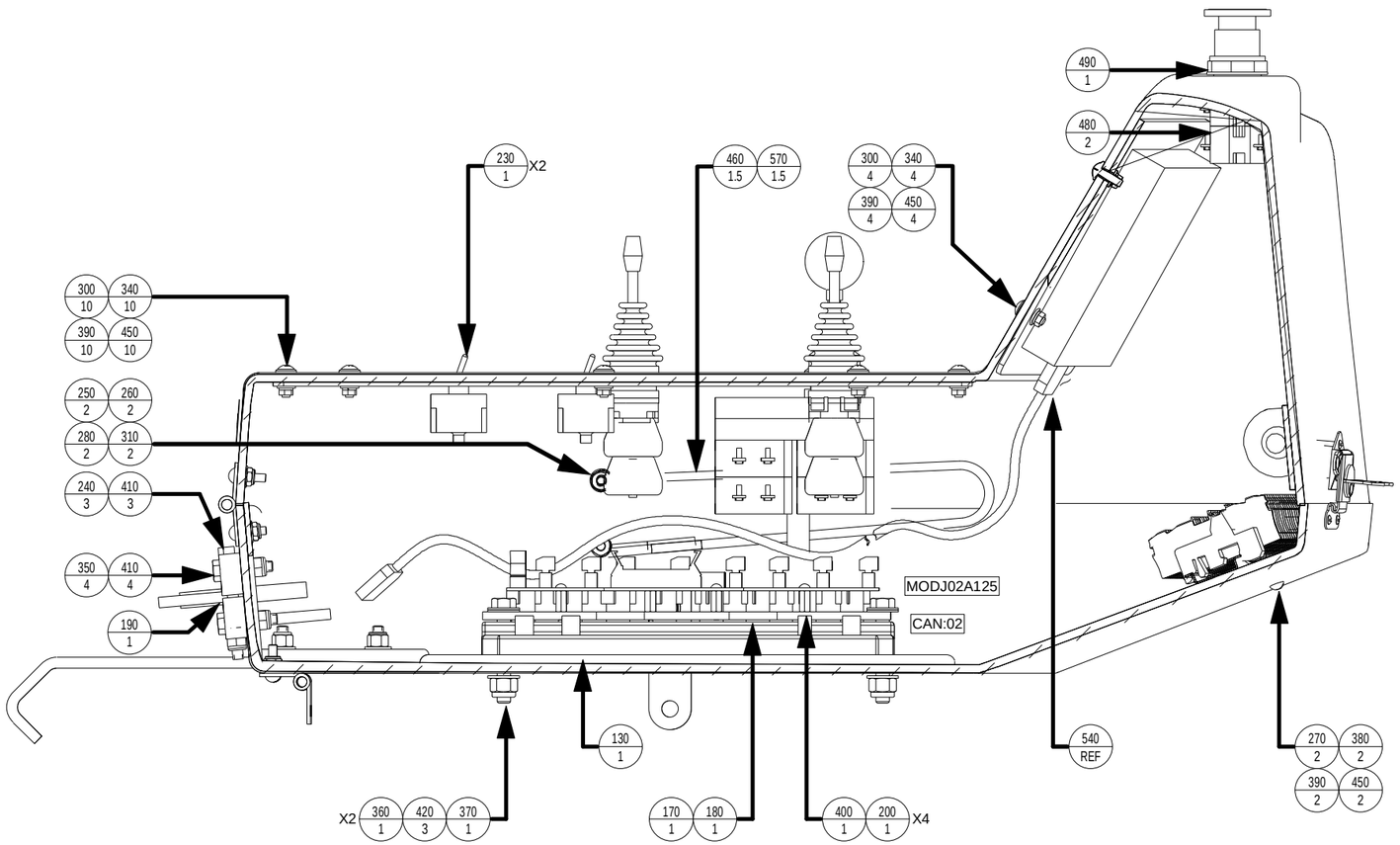

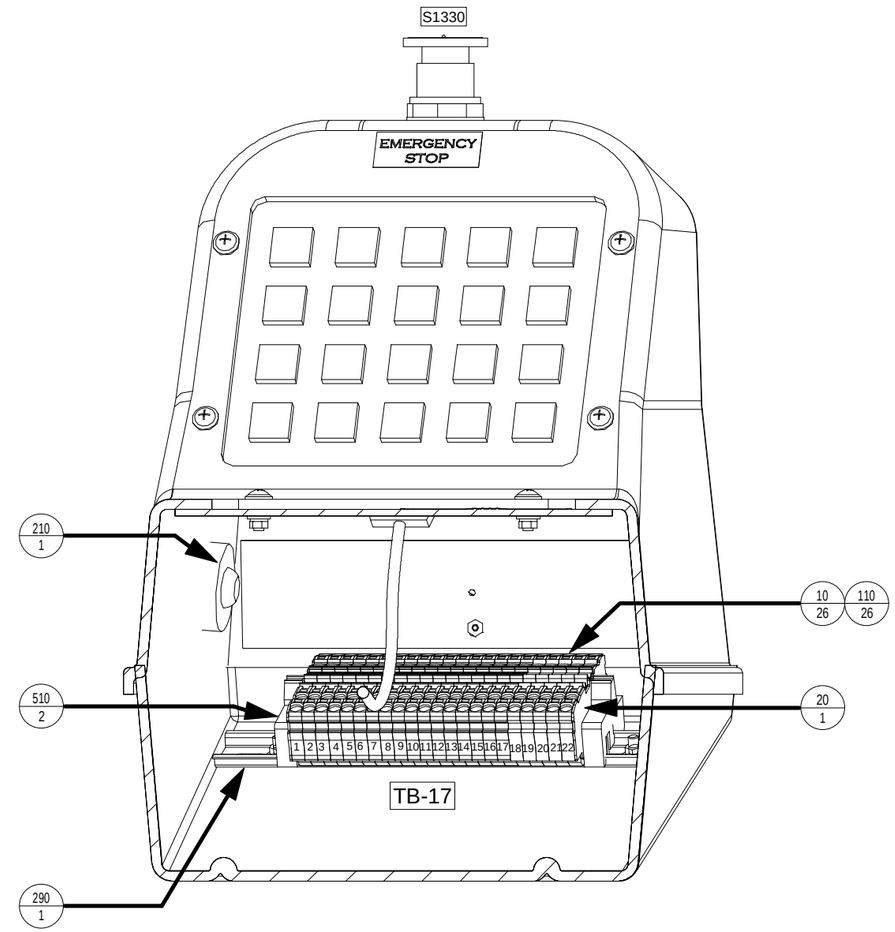

CONFIDENTIAL

©COPYRIGHT 2011 HARSCO. THIS DRAWING OR DOCUMENT IS THE PROPERTY OF HARSCO AND EMBODIES CONFIDENTIAL INFORMATION, TRADE SECRET INFORMATION, AND/OR KNOW-HOW THAT IS THE PROPERTY OF HARSCO. BY ACCEPTING THIS DRAWING OR DOCUMENT, THE RECIPIENT AGREES (1) NOT TO PROVIDE, OR OTHERWISE MAKE AVAILABLE, THE DRAWING OR DOCUMENT, OR ANY INFORMATION OR KNOW-HOW EMBODIED THEREIN, TO ANY THIRD PARTY AND (2) NOT TO REPRODUCE OR USE THE DRAWING OR DOCUMENT TO MANUFACTURE ANY APPARATUS OR DEVICE, WITHOUT THE PRIOR WRITTEN AUTHORIZATION OF HARSCO.

CHANGE #		REVISION	DR	DATE
EC501056	A	NEW RELEASE	CJW	05/11
EC501107	B	FIXED JOYSTICK BACKSIDE VIEW AND WIRING	CJW	05/11
EC501352	C	NEW KEYPAD ASSY, REMOVED JUMPER, UPDATED AS BUILT	CJW	06/11

DRAWING TITLE/DESCRIPTION: RIGHT ARMREST ASSEMBLY Assembly

MACHINE TYPE-MODEL: MARK IV

E3 PROJECT FILE NAME: MARK IV HD

SHEET NUMBER: 5

NUMBER OF JUPITER SHEETS: 0

TOTAL NUMBER OF SHEETS: 7

DRAWN BY: CJW

REL. DATE: 05/11

SIZE: D

SCALE:

HARSCO RAIL

E3 DRAWING

5007955

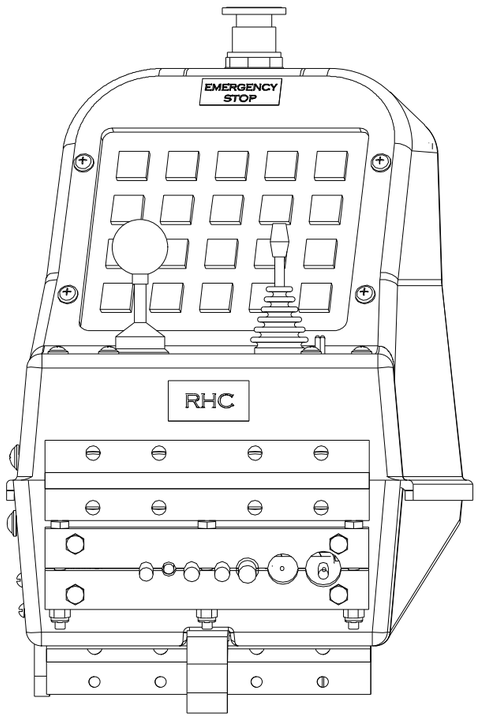

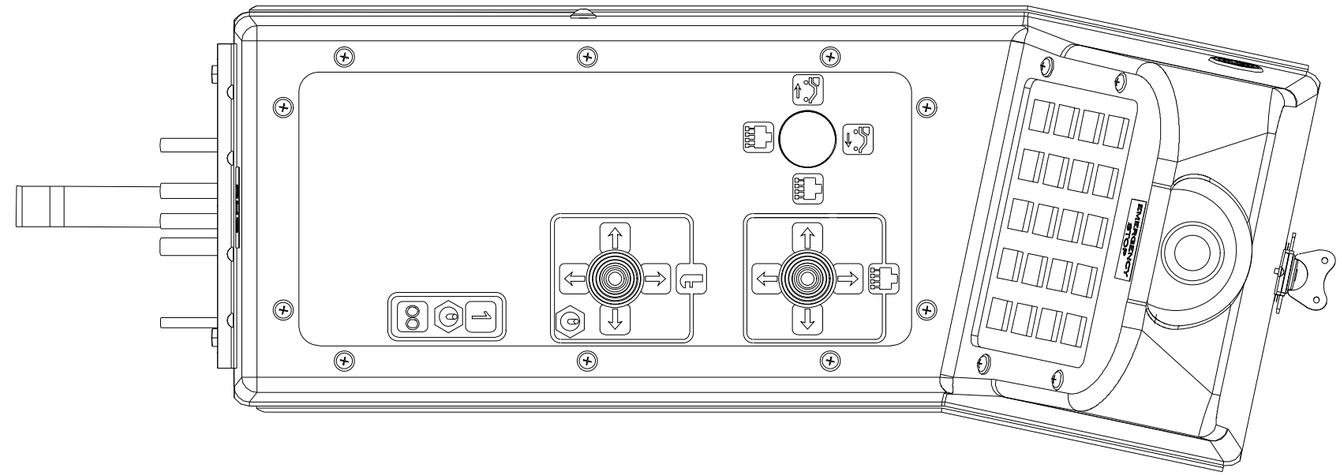

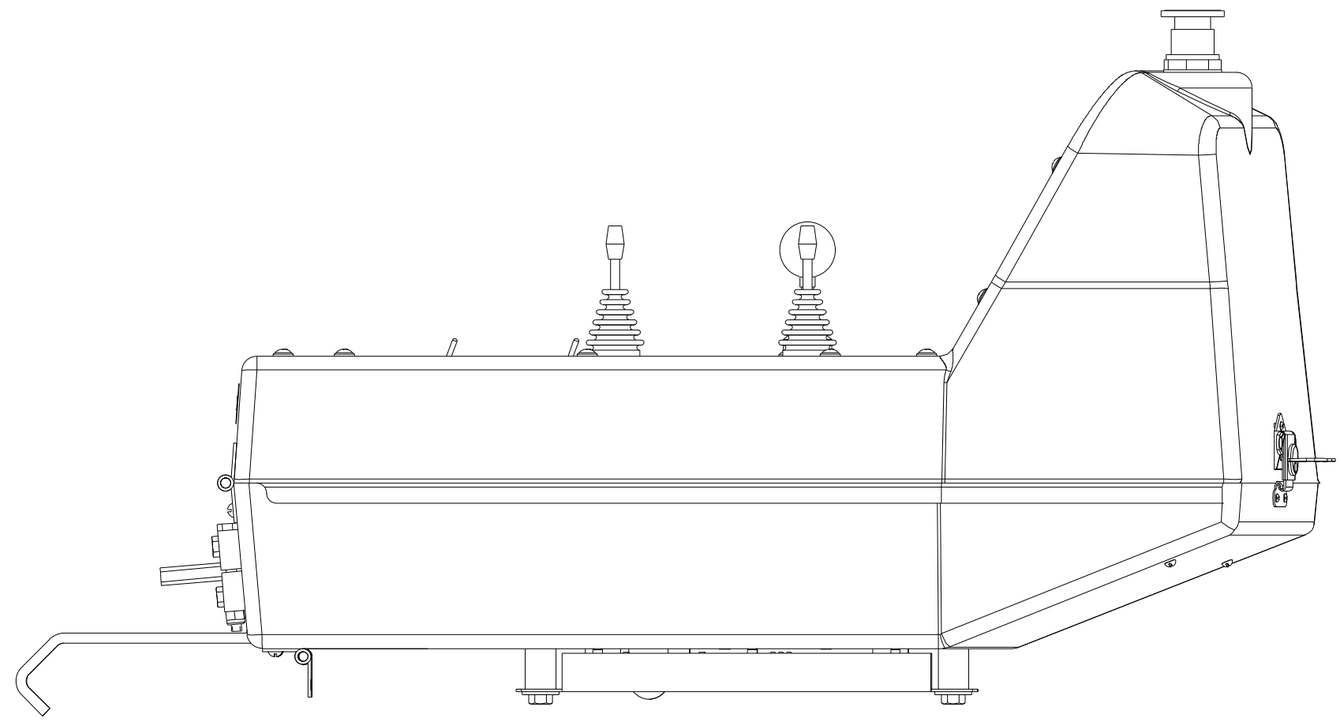

CONFIDENTIAL

©COPYRIGHT 2011 HARSCO. THIS DRAWING OR DOCUMENT IS THE PROPERTY OF HARSCO AND EMBODIES CONFIDENTIAL INFORMATION, TRADE SECRET INFORMATION, AND/OR KNOW-HOW THAT IS THE PROPERTY OF HARSCO. BY ACCEPTING THIS DRAWING OR DOCUMENT, THE RECIPIENT AGREES (1) NOT TO PROVIDE, OR OTHERWISE MAKE AVAILABLE, THE DRAWING OR DOCUMENT, OR ANY INFORMATION OR KNOW-HOW EMBODIED THEREIN, TO ANY THIRD PARTY AND (2) NOT TO REPRODUCE OR USE THE DRAWING OR DOCUMENT TO MANUFACTURE ANY APPARATUS OR DEVICE, WITHOUT THE PRIOR WRITTEN AUTHORIZATION OF HARSCO.

CHANGE #		REVISION	DR	DATE
EC501056	A	NEW RELEASE	CJW	05/11
EC501107	B	FIXED JOYSTICK BACKSIDE VIEW AND WIRING	CJW	05/11
EC501352	C	NEW KEYPAD ASSY, REMOVED JUMPER, UPDATED AS BUILT	CJW	06/11

DRAWING TITLE/DESCRIPTION:
RIGHT ARMREST ASSEMBLY
Assembly

MACHINE TYPE-MODEL:
MARK IV

E3 PROJECT FILE NAME:
MARK IV HD

SHEET NUMBER: 6
NUMBER OF JUPITER SHEETS: 0
TOTAL NUMBER OF SHEETS: 7

DRAWN BY: CJW
REL. DATE: 05/11
SIZE: D
SCALE:

HARSCO RAIL

E3 DRAWING

5007955

BACK VIEW OF NAMEPLATE ASSEMBLY

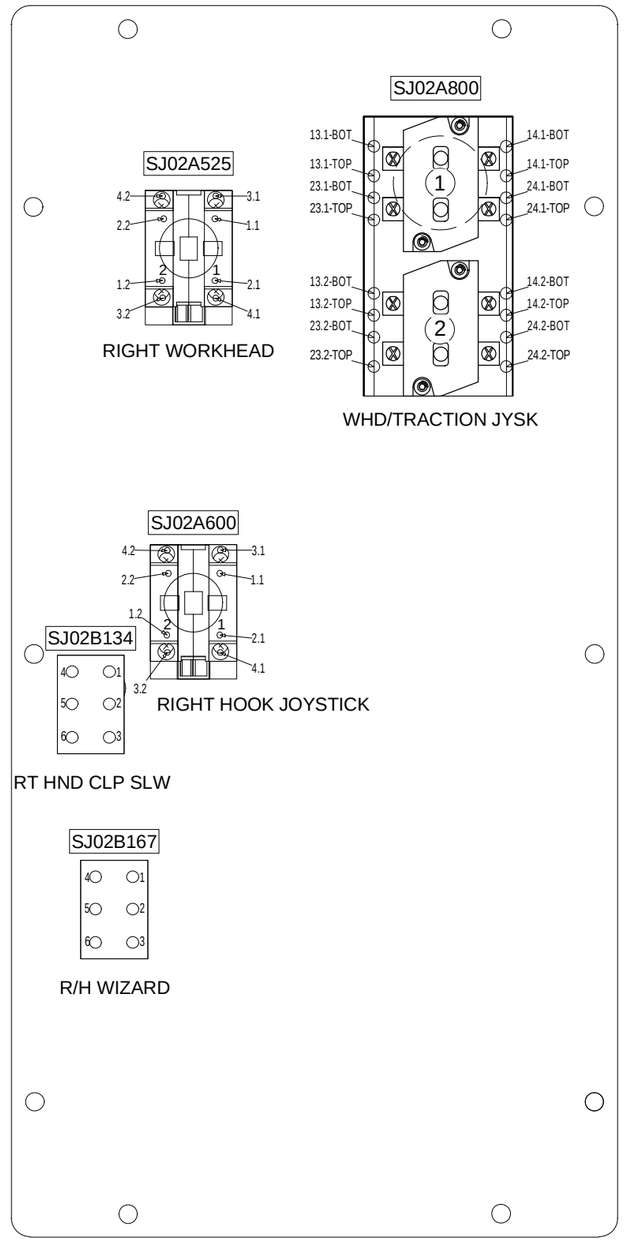

CONFIDENTIAL

©COPYRIGHT 2011 HARSCO. THIS DRAWING OR DOCUMENT IS THE PROPERTY OF HARSCO AND EMBODIES CONFIDENTIAL INFORMATION, TRADE SECRET INFORMATION, AND/OR KNOW-HOW THAT IS THE PROPERTY OF HARSCO. BY ACCEPTING THIS DRAWING OR DOCUMENT, THE RECIPIENT AGREES (1) NOT TO PROVIDE, OR OTHERWISE MAKE AVAILABLE, THE DRAWING OR DOCUMENT, OR ANY INFORMATION OR KNOW-HOW EMBODIED THEREIN, TO ANY THIRD PARTY AND (2) NOT TO REPRODUCE OR USE THE DRAWING OR DOCUMENT TO MANUFACTURE ANY APPARATUS OR DEVICE, WITHOUT THE PRIOR WRITTEN AUTHORIZATION OF HARSCO.

CHANGE #		REVISION	DR	DATE
EC501056	A	NEW RELEASE	CJW	05/11
EC501107	B	FIXED JOYSTICK BACKSIDE VIEW AND WIRING	CJW	05/11
EC501352	C	NEW KEYPAD ASSY, REMOVED JUMPER, UPDATED AS BUILT	CJW	06/11

DRAWING TITLE/DESCRIPTION:
RIGHT ARMREST ASSEMBLY
Nameplate Back View

MACHINE TYPE-MODEL:
MARK IV

E3 PROJECT FILE NAME:
MARK IV HD

SHEET NUMBER: 7
NUMBER OF JUPITER SHEETS: 0
TOTAL NUMBER OF SHEETS: 7

DRAWN BY: CJW
REL. DATE: 05/11
SIZE: D
SCALE:

HARSCO RAIL

E3 DRAWING

5007955

ENG.DWG.NO.
H1826WAB

REVISIONS							
NO	ER	DESCRIPTION	ZONE	DR	CK	APP	MF
1	12509	NEW RELEASE		EP			

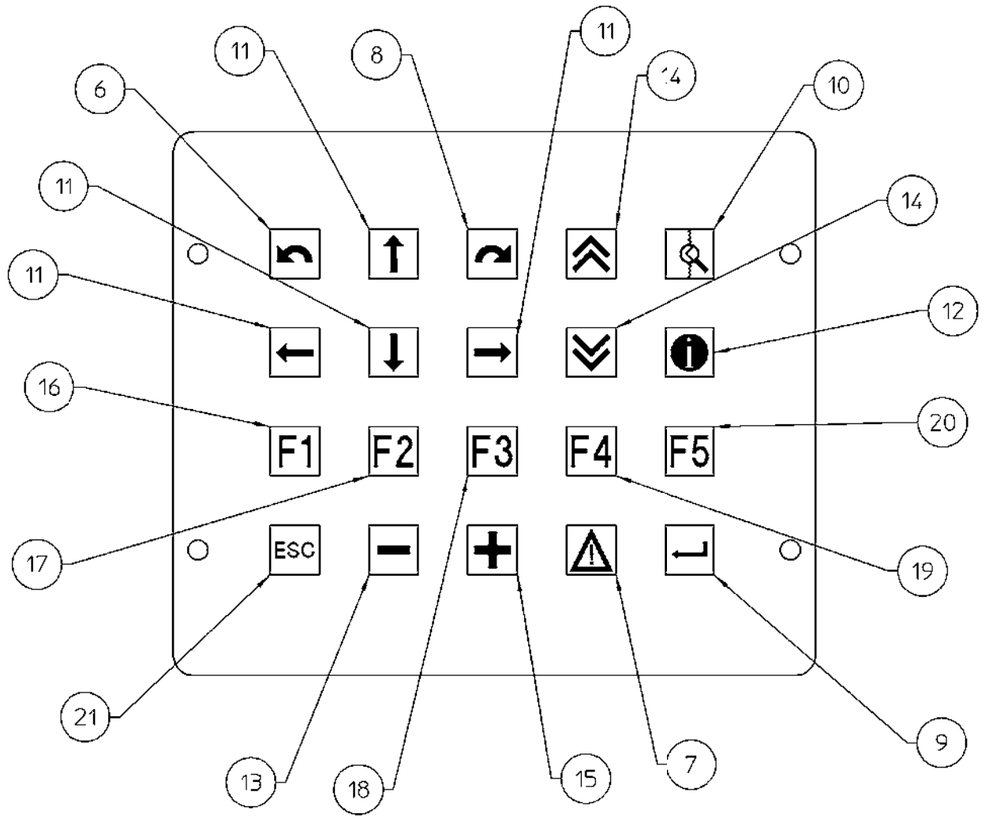

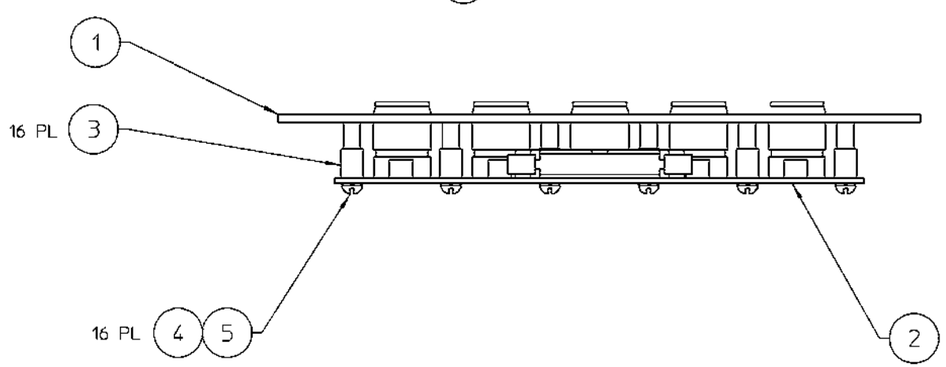

NOTES:

1. ALL BUTTONS MUST MOVE FREELY
2. ITEMS 6 THRU 25: INSTALL ACCORDING TO PICTORAL REPRESENTATION

FIG NO.	ITEM NO.	PART NUMBER	DESCRIPTION AND MATERIAL SIZE (REF.ONLY)	QTY
	21	C8036Y21	FILM INSERT, ESC	1
	20	C8036Y18	FILM INSERT, F5	1
	19	C8036Y17	FILM INSERT, F4	1
	18	C8036Y16	FILM INSERT, F3	1
	17	C8036Y15	FILM INSERT, F2	1
	16	C8036Y14	FILM INSERT, F1	1
	15	C8036Y24	FILM INSERT, PLUS SIGN	1
	14	C8036Y30	FILM INSERT, PAGE BACK	2
	13	C8036Y25	FILM INSERT, MINUS SIGN	1
	12	C8036Y31	FILE INSERT, INFORMATION	1
	11	C8036Y27	FILM INSERT, ARROW	4
	10	C8036Y36	FILM INSERT, ZOOM	1
	9	C8036Y19	FILE INSERT, RETURN	1
	8	C8036Y34	FILM INSERT, CROSS LEVEL RIGHT	1
	7	C8036Y26	FILE INSERT, ALARMS	1
	6	C8036Y32	FILM INSERT, CROSS LEVEL LEFT	1
	5	A0061004	#6 LOCK WASHER	16
	4	A0050019	6-32x7/8 RDHD MSCR	16
	3	B1577Y04	SNAP IN NYLON SPACER	16
	2	B0943WAB	SWITCH PAD ASSY	1
	1	H1827W01	KEYPAD NAMEPLATE	1

IMPLIED TOLERANCES
ALL DIMENSIONS ARE IN INCHES-TOLERANCE UNLESS OTHERWISE SPECIFIED

NOMINAL SIZE RANGE		PLUS OR MINUS			NOMINAL SIZE RANGE		PLUS OR MINUS		
OVER	TO	FRACTION	2 PLACE DECIMAL	3 PLACE DECIMAL	OVER	TO	FRACTION	2 PLACE DECIMAL	3 PLACE DECIMAL
-	1	1/64	.01	.003	6	24	3/64	.03	.008
1	6	1/32	.02	.005	24	-	1/16	.05	.010

ANGULAR DIMENSIONS PLUS OR MINUS 1 DEGREE

√ ALL MACHINED SURFACES TO HAVE A SURFACE FINISH OF 125 MICRONCHES UNLESS OTHERWISE SPECIFIED.

WELDING SPECIFICATION

UNLESS OTHERWISE SPECIFIED ALL WELDS SHOULD ADHERE TO FAIRMONT TAMPER WELDING SPECIFICATION NO. 101

WEIGHT lbs.

3rd ANGLE PROJECTION

DO NOT SCALE

SHEET 1 CONT. – OF –

DESCRIPTION (2)4
RIGHT KEYPAD ASSEMBLY

DRAWN EP	DATE 6/8/02	MACHINE TYPE MARK IV JUPITER
CHECKED DGV	DATE 6/10/02	
APP-ENG WG	DATE 6/10/02	
APP-MFG	DATE	
LAST ECR. 12509 .30	CHECKED dvgn DATE 13-Jun-02	ENG.DWG.NO. H1826WAB

Fairmont Tamper
2401 Edmund Road-Box 20
Cayce-West Columbia,
South Carolina 29171-0020
(803) 822-9160

THIS DOCUMENT CONTAINS PROPRIETARY INFORMATION AND SUCH INFORMATION MAY NOT BE DISCLOSED TO OTHERS FOR ANY PURPOSE OR USED FOR MANUFACTURING PURPOSES WITHOUT THE WRITTEN PERMISSION OF FAIRMONT TAMPER.

PRODUCT STRUCTURE

ITEM	PART #	QTY	PART DESCRIPTION	
10				
20	2011783	4	CONNECTOR, SPLITTER	: M12 T STYLE CONNECTOR SENSOR W/CABLE ENDS
30	3401324	5	CABLE ASSEMBLY, M12	: 1 M W/M12 MALE/FEMALE SHIELDED
40	3401325	4	CABLE ASSEMBLY, M12	: 2 M W/M12 MALE/FEMALE SHIELDED
50	3401326	9	CABLE ASSEMBLY, M12	: 3 M W/M12 MALE/FEMALE SHIELDED
60	3401327	9	CABLE ASSEMBLY, M12	: 5 M W/M12 MALE/FEMALE SHIELDED
70	3401328	3	CABLE ASSEMBLY, M12	: 7 M W/M12 MALE/FEMALE SHIELDED
80	3401329	4	CABLE ASSEMBLY, M12	: 10 M W/M12 MALE/FEMALE SHIELDED
90	3401336	4	CABLE ASSEMBLY, M12	: 4 M W/M12 MALE-FEMALE SHIELDED
100	3406480	1	CONNECTOR ASSEMBLY	: M12-M CAN2 TERMINATOR CONNECTOR
110	4015775	9	CABLE ASSEMBLY, M12	: CABLE, M12 F/PT, 10M BLK HF 5CON
120	4016767	316	DECAL	: TERMINAL BLOCK MARKER STRIP
130	4019452	11	MODULE, DIGITAL OUT	: 8-CHANNEL DIGITAL MODULE, JUPITER 2
140	4019453	3	MODULE, ANALOG INPUT	: 8-CHANNEL ANALOG INPUT 24VDC CAN BASED
150	4022324	2	CABLE ASSEMBLY, M12	: NETWORK CABLE 0.75METERS M12 MALE/FEMALE
160	4022325	5	CABLE ASSEMBLY, M12	: 1M NETWORK CABLE, M12 MALE/FEMALE
170	4022326	3	CABLE ASSEMBLY, M12	: 2M NETWORK CABLE, M12 MALE/FEMALE
180				
190	4022329	2	CABLE ASSEMBLY, M12	: 5M NETWORK CABLE, M12 MALE/FEMALE
200	4022330	1	CABLE ASSEMBLY, M12	: 7M NETWORK CABLE, M12 MALE/FEMALE
210	4022331	2	CABLE ASSEMBLY, M12	: 10M NETWORK CABLE, M12 MALE/FEMALE
220	4022334	16	CABLE ASSEMBLY, M12	: 5 M W/M12 FEMALE CONN
230				
240	4022348	3	CABLE ASSEMBLY, M12	: 5 M W/M12 MALE + DIN-A STYLE +DIODE
250	4022349	1	CABLE ASSEMBLY, M12	: 7 M W/M12 MALE + DIN-A STYLE +DIODE
260	4022353	22	CABLE ASSEMBLY, M12	: 1 M W/M12 MALE + DIN-A STYLE W/TRANSZORB
270	4022354	19	CABLE ASSEMBLY, M12	: 2 M W/M12 MALE + DIN-A STYLE W/TRANSZORB
280	4022355	3	CABLE ASSEMBLY, M12	: 3 M W/M12 MALE + DIN-A STYLE W/TRANSZORB
290	4022356	6	CABLE ASSEMBLY, M12	: 5 M W/M12 MALE + DIN-A STYLE W/TRANSZORB
300				
310				
320	4022369	5	CABLE ASSEMBLY, M12	: 2 M W/M12 MALE + DIN-I STYLE +DIODE
330	4022370	7	CABLE ASSEMBLY, M12	: 3 M W/M12 MALE + DIN-I STYLE +DIODE
340				
350	5007951	REF	ENCLOSURE ASSEMBLY	: MARK IV MCB PANEL ASSEMBLY
360	5007952	REF	ENCLOSURE ASSEMBLY	: MARK IV PDB ASSEMBLY
370	0-3150005-0-01	1	INCLINOMETER	: INCLINOMETER
380	F009734	0.01	TAPE	: ELECTRICAL, BLACK, HD VINYL
390	F014476	4	NUT	: 5/16- ELASTIC STOP NUT
400	F016578	100	TY-RAP	: LARGE 7 5/16"
410	F018229	318	TY-RAP	: SMALL TY-RAP 3 1/2"
420				
430	F022258	4FT	SHRINK TUBING	: TUBING FOR DIODES/TRANSZORBS .12 I.D.
440	F023409	4	SCREW	: 5/16-18X1 3/4 HEX FLG SCREW GR5 ZP
450	F023415	24	SCREW	: 5/16-18X1 1/2 HEX FLG SCREW GR5 ZP
460	5000347	1	CABLE ASSEMBLY, J1939	: CABLE, JUP 2, J1939 ORANGE WEDGELOCK, NO ADDED RES
470	H5133WAV	1	POWER SUPPLY, DC-DC	: DC/DC CONVERTER PCB ASSEMBLY
480				
490	F001050	16	WASHER	: WROUGHT WASHER #10 (.190)
500	F016227	8	SCREW	: #10-24X1" ROUND HEAD MACHINE SCREW
510	F018029K	8	NUT	: #10-24 ELASTIC STOP NUT
520	174532	1	ALARM	: 12V TO 36 VOLTS 107db
530	3405078	8	CABLE ASSEMBLY, M12	: 7 M W/M12 FEMALE CONN + SHIELDED
540				
550	3401330	1	CABLE ASSEMBLY, M12	: 3 M W/M12 MALE CONN + SHIELDED

NOTES:

1. COVER NOT SHOWN IN ALL VIEWS FOR CLARITY.
2. MARK WIRE PER HARSCO RAIL W.I. 18525.
3. DO NOT USE FERRULE ON WIRE ENDS.
4. ATTACH CABLE TAGS (4016767) 6" FROM END OF CABLE WITH TYRAP (F018229).
5. ALL SHIELDED CABLES ARE TO HAVE THERE JACKETS ON DURING ROUTING IN ENCLOSURES AND USE ITEMS 380 (TAPE) TO COVER END OF JACKET (TO KEEP BRAIDING ISOLATED). USE ITEM 430 (SHRINK TUBING) TP COVER SHIELD FROM JACKET TO TERMINATION.

CONFIDENTIAL

©COPYRIGHT 2011 HARSCO. THIS DRAWING OR DOCUMENT IS THE PROPERTY OF HARSCO AND EMBODIES CONFIDENTIAL INFORMATION, TRADE SECRET INFORMATION, AND/OR KNOW-HOW THAT IS THE PROPERTY OF HARSCO. BY ACCEPTING THIS DRAWING OR DOCUMENT, THE RECIPIENT AGREES (1) NOT TO PROVIDE, OR OTHERWISE MAKE AVAILABLE, THE DRAWING OR DOCUMENT, OR ANY INFORMATION OR KNOW-HOW EMBODIED THEREIN, TO ANY THIRD PARTY AND (2) NOT TO REPRODUCE OR USE THE DRAWING OR DOCUMENT TO MANUFACTURE ANY APPARATUS OR DEVICE, WITHOUT THE PRIOR WRITTEN AUTHORIZATION OF HARSCO.

CHANGE #		REVISION	DR	DATE
EC501059	A	NEW RELEASE	CJW	05/11
EC501128	B	ADDED NEW VIEWS, UPDATED CABLES	CJW	05/11
EC501418	C	REMOVED SAFETY RELAYS, UPDATED AS BUILT	CJW	06/11
EC501821	D	UPDATE AS BUILT- CABLE PART NUMBERS	CJW	08/11
EC502003	E	SWAP J04400/J04800 AND J05600/J05700 ON SHT 7 UPDATE SHT 21	CJW	09-22-11
EC502615	F	UPDATE CABLE CHARTS FOR SAT RADIO ON P.18	CJW	01-05-12
EC502851	G	UPDATE CABLES AS BUILT, SEE EC FOR CHANGE DETAIL	CJW	02-08-12
EC503310	H	SEE EC FOR CHANGE DETAIL	CJW	04-09-12

DRAWING TITLE/DESCRIPTION:
JUPITER SYSTEM INSTALLATION
Bill Of Material

MACHINE TYPE-MODEL:
MARK IV

E3 PROJECT FILE NAME:
MARK IV HD_10

SHEET NUMBER: 1
NUMBER OF JUPITER SHEETS: -
TOTAL NUMBER OF SHEETS: 23

DRAWN BY: CJW
REL. DATE: 05/11
SIZE: D
SCALE:

HARSCO RAIL

E3 DRAWING
5007956

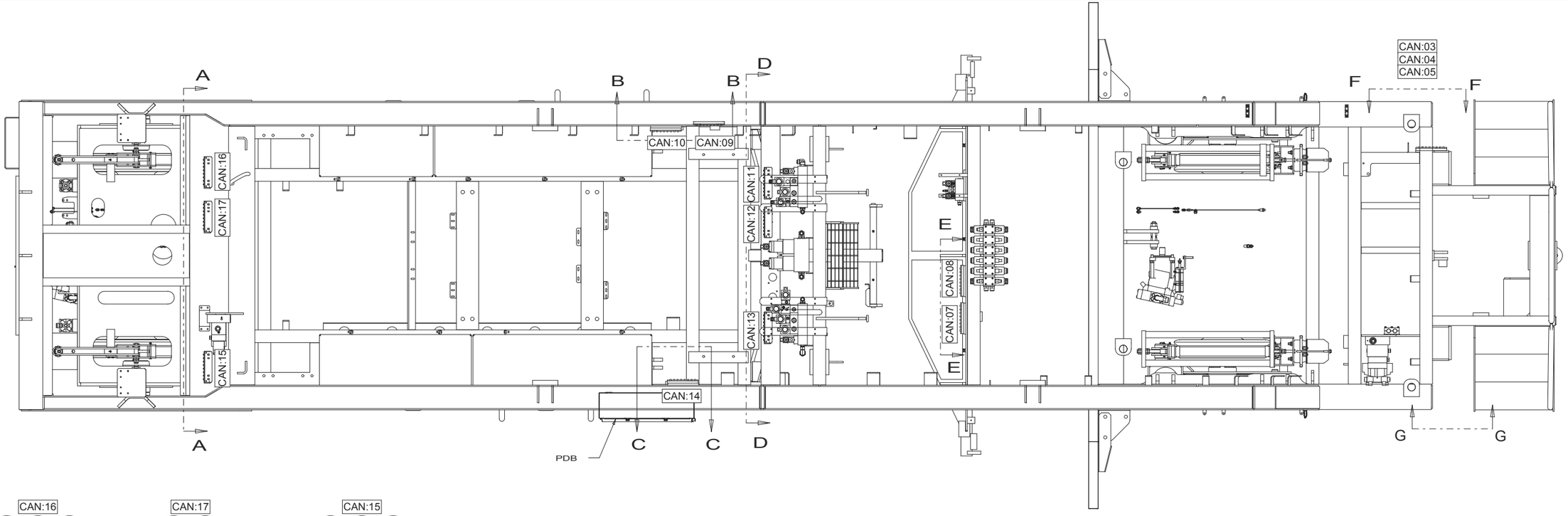

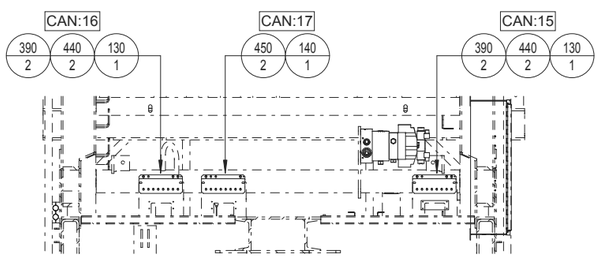

SECTION A-A

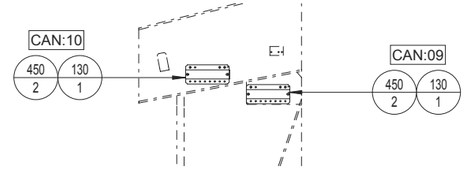

SECTION B-B

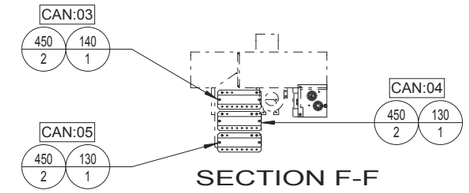

SECTION F-F

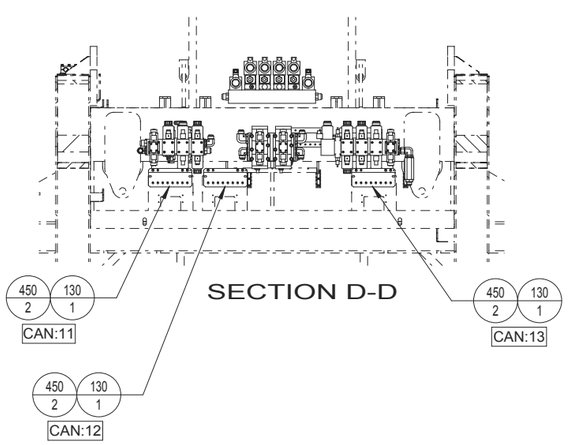

SECTION D-D

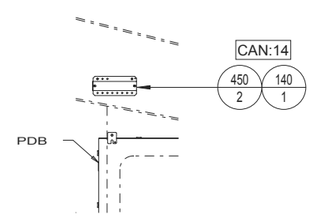

SECTION C-C

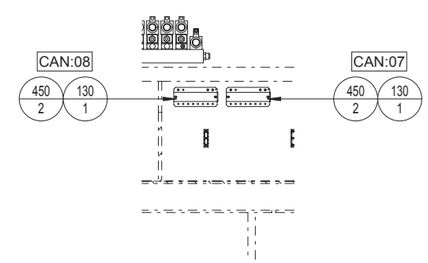

SECTION E-E

NOTE: CAN:02 IS LOCATED IN RIGHT HAND CONSOLE
CAN:06 IS LOCATED IN MCB

CONFIDENTIAL

©COPYRIGHT 2011 HARSCO. THIS DRAWING OR DOCUMENT IS THE PROPERTY OF HARSCO AND EMBODIES CONFIDENTIAL INFORMATION, TRADE SECRET INFORMATION, AND/OR KNOW-HOW THAT IS THE PROPERTY OF HARSCO. BY ACCEPTING THIS DRAWING OR DOCUMENT, THE RECIPIENT AGREES (1) NOT TO PROVIDE, OR OTHERWISE MAKE AVAILABLE, THE DRAWING OR DOCUMENT, OR ANY INFORMATION OR KNOW-HOW EMBODIED THEREIN, TO ANY THIRD PARTY AND (2) NOT TO REPRODUCE OR USE THE DRAWING OR DOCUMENT TO MANUFACTURE ANY APPARATUS OR DEVICE, WITHOUT THE PRIOR WRITTEN AUTHORIZATION OF HARSCO.

CHANGE #		REVISION	DR	DATE
EC501059	A	NEW RELEASE	CJW	05/11
EC501128	B	ADDED NEW VIEWS, UPDATED CABLES	CJW	05/11
EC501418	C	REMOVED SAFETY RELAYS, UPDATED AS BUILT	CJW	06/11
EC501821	D	UPDATE AS BUILT- CABLE PART NUMBERS	CJW	08/11
EC502003	E	SWAP J04400/J04800 AND J05600/J05700 ON SHT 7 UPDATE SHT 21	CJW	09-22-11
EC502615	F	UPDATE CABLE CHARTS FOR SAT RADIO ON P.18	CJW	01-05-12
EC502851	G	UPDATE CABLES AS BUILT, SEE EC FOR CHANGE DETAIL	CJW	02-08-12
EC503310	H	SEE EC FOR CHANGE DETAIL	CJW	04-09-12

DRAWING TITLE/DESCRIPTION:
JUPITER SYSTEM INSTALLATION
Jupiter Module Locations

MACHINE TYPE-MODEL:
MARK IV

E3 PROJECT FILE NAME:
MARK IV HD_10

SHEET NUMBER: 2
NUMBER OF JUPITER SHEETS: -
TOTAL NUMBER OF SHEETS: 23

DRAWN BY: CJW
REL. DATE: 05/11
SIZE: D
SCALE:

HARSCO RAIL

E3 DRAWING
5007956

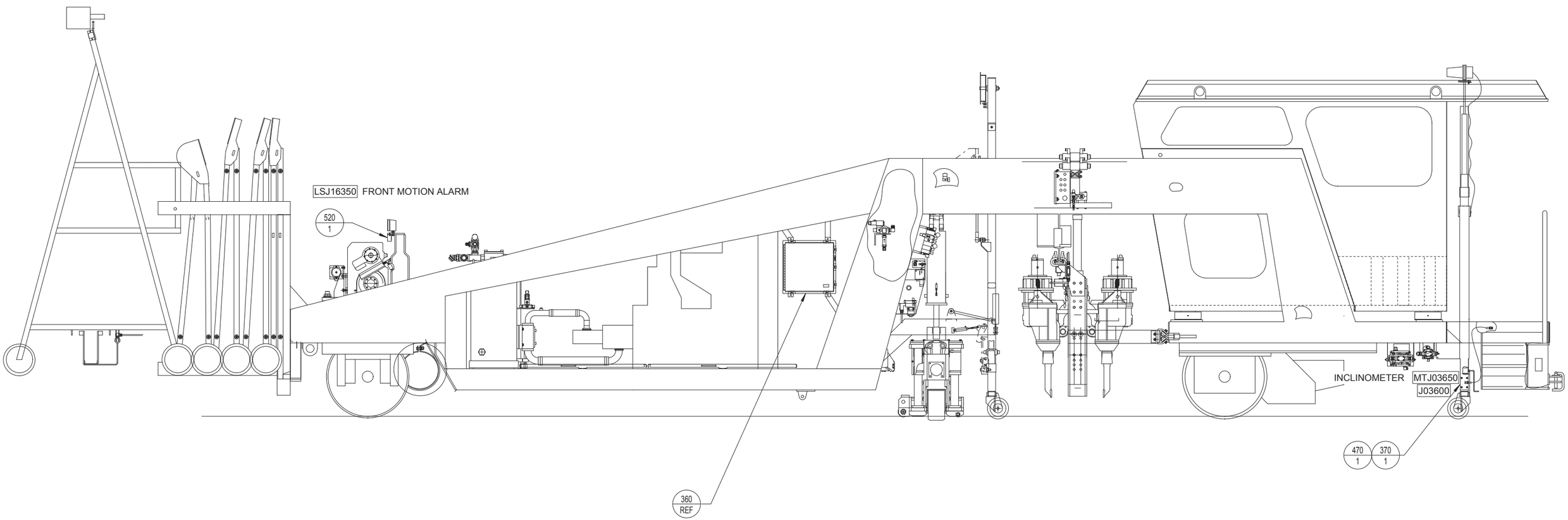

CONFIDENTIAL

©COPYRIGHT 2011 HARSCO. THIS DRAWING OR DOCUMENT IS THE PROPERTY OF HARSCO AND EMBODIES CONFIDENTIAL INFORMATION, TRADE SECRET INFORMATION, AND/OR KNOW-HOW THAT IS THE PROPERTY OF HARSCO. BY ACCEPTING THIS DRAWING OR DOCUMENT, THE RECIPIENT AGREES (1) NOT TO PROVIDE, OR OTHERWISE MAKE AVAILABLE, THE DRAWING OR DOCUMENT, OR ANY INFORMATION OR KNOW-HOW EMBODIED THEREIN, TO ANY THIRD PARTY AND (2) NOT TO REPRODUCE OR USE THE DRAWING OR DOCUMENT TO MANUFACTURE ANY APPARATUS OR DEVICE, WITHOUT THE PRIOR WRITTEN AUTHORIZATION OF HARSCO.

CHANGE #		REVISION	DR	DATE
EC501059	A	NEW RELEASE	CJW	05/11
EC501128	B	ADDED NEW VIEWS, UPDATED CABLES	CJW	05/11
EC501418	C	REMOVED SAFETY RELAYS, UPDATED AS BUILT	CJW	06/11
EC501821	D	UPDATE AS BUILT- CABLE PART NUMBERS	CJW	08/11
EC502003	E	SWAP J04400/J04800 AND J05600/J05700 ON SHT 7 UPDATE SHT 21	CJW	09-22-11
EC502615	F	UPDATE CABLE CHARTS FOR SAT RADIO ON P.18	CJW	01-05-12
EC502851	G	UPDATE CABLES AS BUILT, SEE EC FOR CHANGE DETAIL	CJW	02-08-12
EC503310	H	SEE EC FOR CHANGE DETAIL	CJW	04-09-12

DRAWING TITLE/DESCRIPTION:
JUPITER SYSTEM INSTALLATION
Device Layout

MACHINE TYPE-MODEL:
MARK IV

E3 PROJECT FILE NAME:
MARK IV HD_10

SHEET NUMBER: 3

NUMBER OF JUPITER SHEETS: -

TOTAL NUMBER OF SHEETS: 23

DRAWN BY: CJW

REL. DATE: 05/11

SIZE: D

SCALE:

HARSCO RAIL

E3 DRAWING

5007956

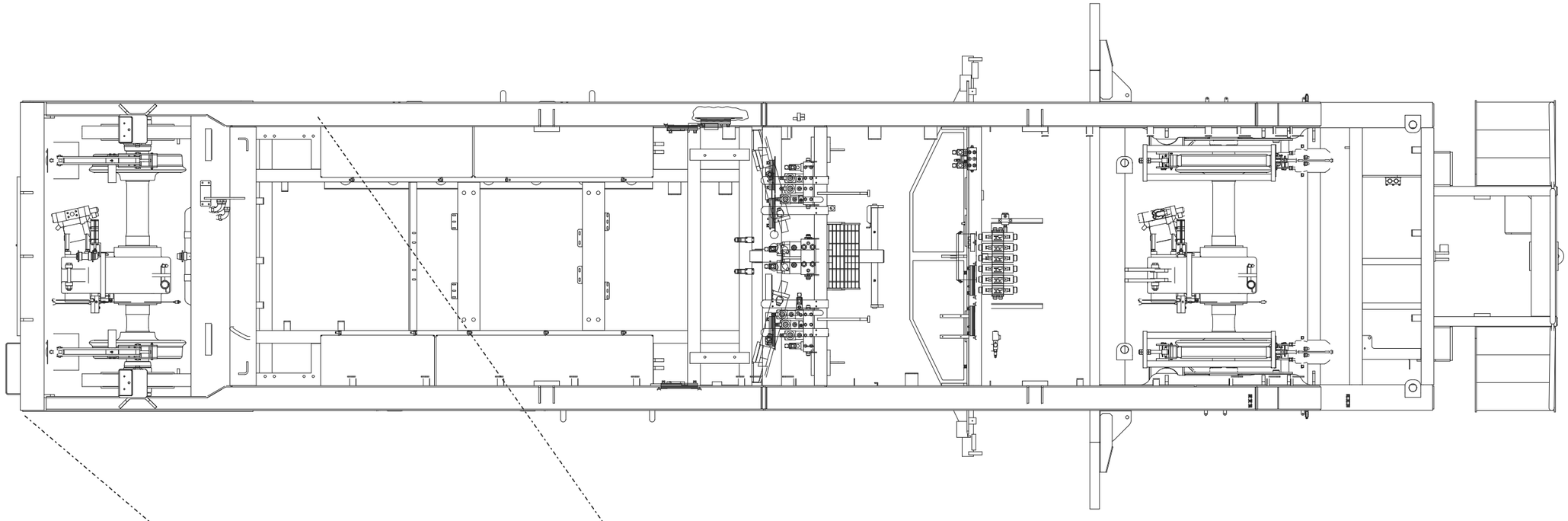

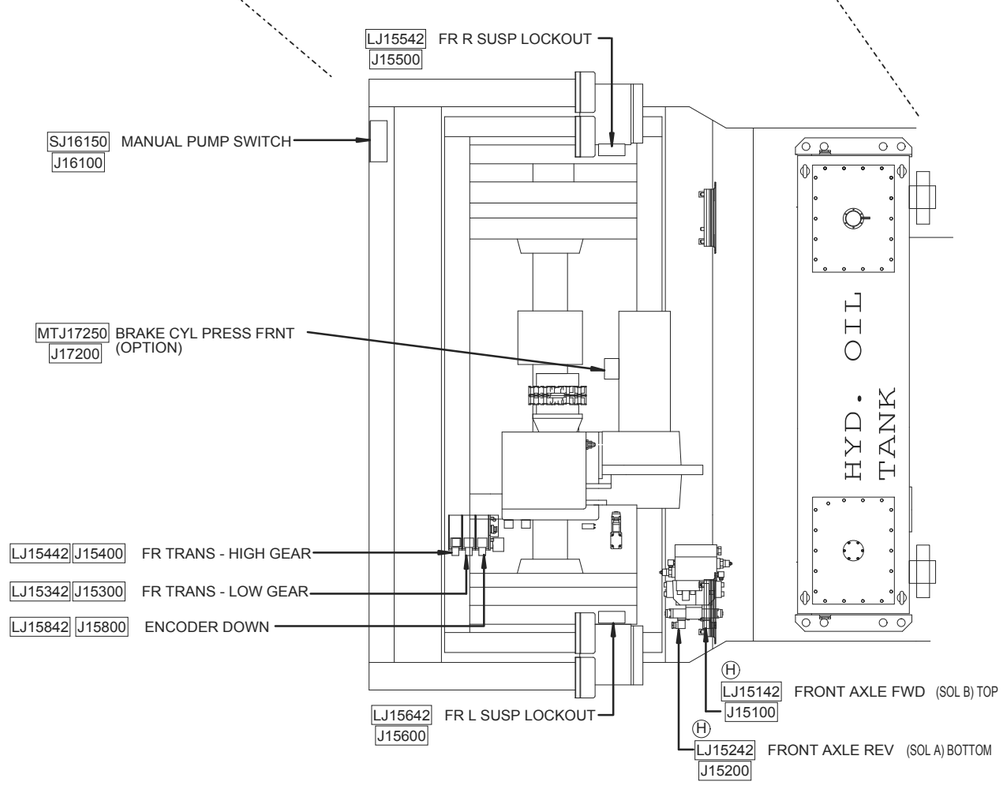

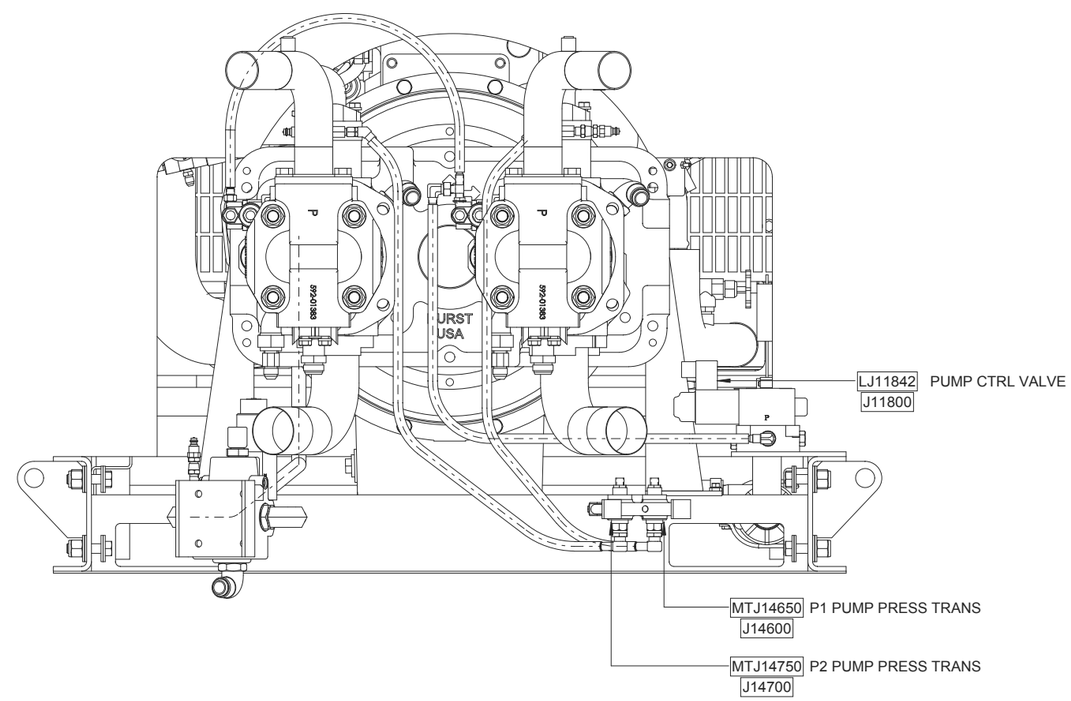

HYDRAULIC PUMP DETAIL

CONFIDENTIAL

©COPYRIGHT 2011 HARSCO. THIS DRAWING OR DOCUMENT IS THE PROPERTY OF HARSCO AND EMBODIES CONFIDENTIAL INFORMATION, TRADE SECRET INFORMATION, AND/OR KNOW-HOW THAT IS THE PROPERTY OF HARSCO. BY ACCEPTING THIS DRAWING OR DOCUMENT, THE RECIPIENT AGREES (1) NOT TO PROVIDE, OR OTHERWISE MAKE AVAILABLE, THE DRAWING OR DOCUMENT, OR ANY INFORMATION OR KNOW-HOW EMBODIED THEREIN, TO ANY THIRD PARTY AND (2) NOT TO REPRODUCE OR USE THE DRAWING OR DOCUMENT TO MANUFACTURE ANY APPARATUS OR DEVICE, WITHOUT THE PRIOR WRITTEN AUTHORIZATION OF HARSCO.

CHANGE #		REVISION	DR	DATE
EC501059	A	NEW RELEASE	CJW	05/11
EC501128	B	ADDED NEW VIEWS, UPDATED CABLES	CJW	05/11
EC501418	C	REMOVED SAFETY RELAYS, UPDATED AS BUILT	CJW	06/11
EC501821	D	UPDATE AS BUILT- CABLE PART NUMBERS	CJW	08/11
EC502003	E	SWAP J04400/J04800 AND J05600/J05700 ON SHT 7 UPDATE SHT 21	CJW	09-22-11
EC502615	F	UPDATE CABLE CHARTS FOR SAT RADIO ON P.18	CJW	01-05-12
EC502851	G	UPDATE CABLES AS BUILT, SEE EC FOR CHANGE DETAIL	CJW	02-08-12
EC503310	H	SEE EC FOR CHANGE DETAIL	CJW	04-09-12

DRAWING TITLE/DESCRIPTION:
JUPITER SYSTEM INSTALLATION
Solenoid Layout

MACHINE TYPE-MODEL:
MARK IV

E3 PROJECT FILE NAME:
MARK IV HD_10

SHEET NUMBER: 4
NUMBER OF JUPITER SHEETS: -
TOTAL NUMBER OF SHEETS: 23

DRAWN BY: CJW
REL. DATE: 05/11
SIZE: D
SCALE:

HARSCO RAIL

E3 DRAWING
5007956

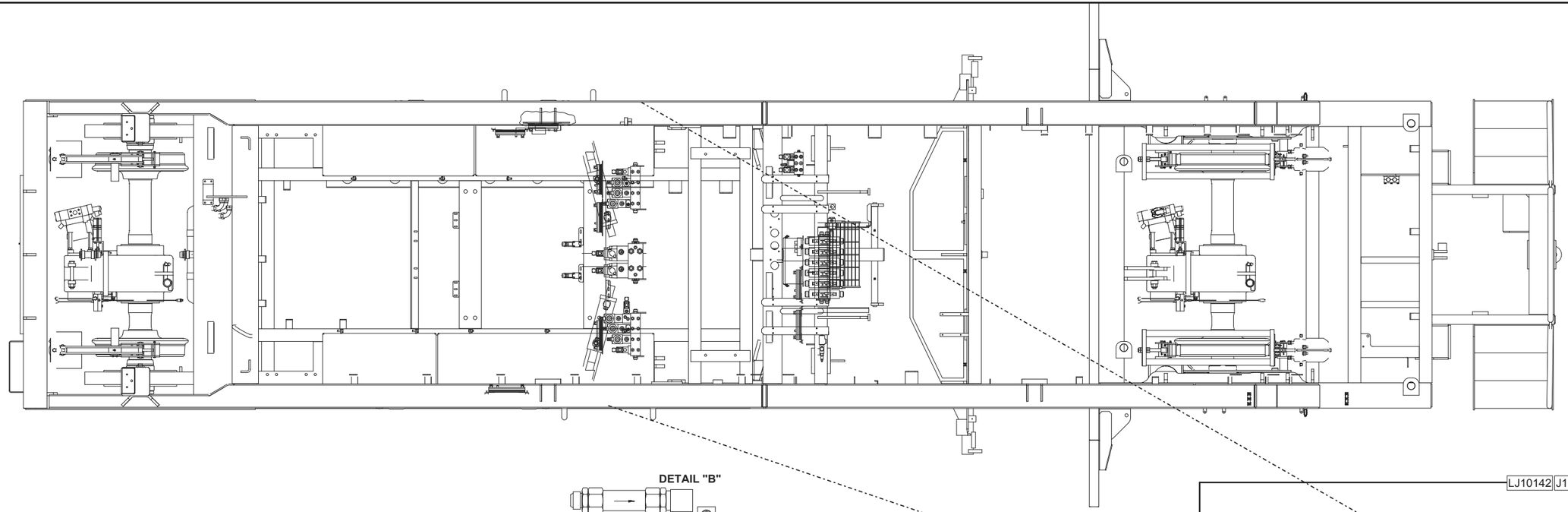

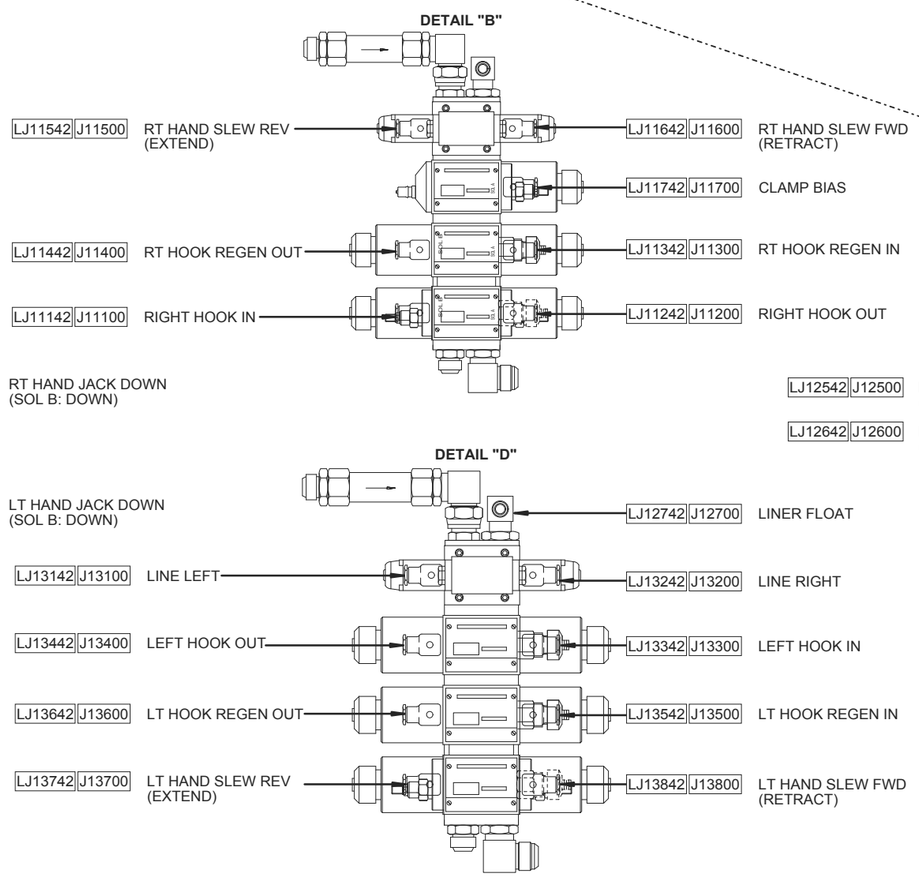

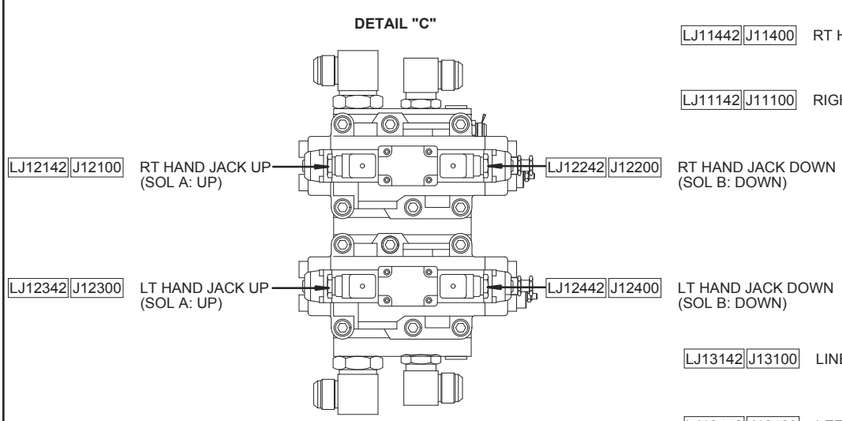

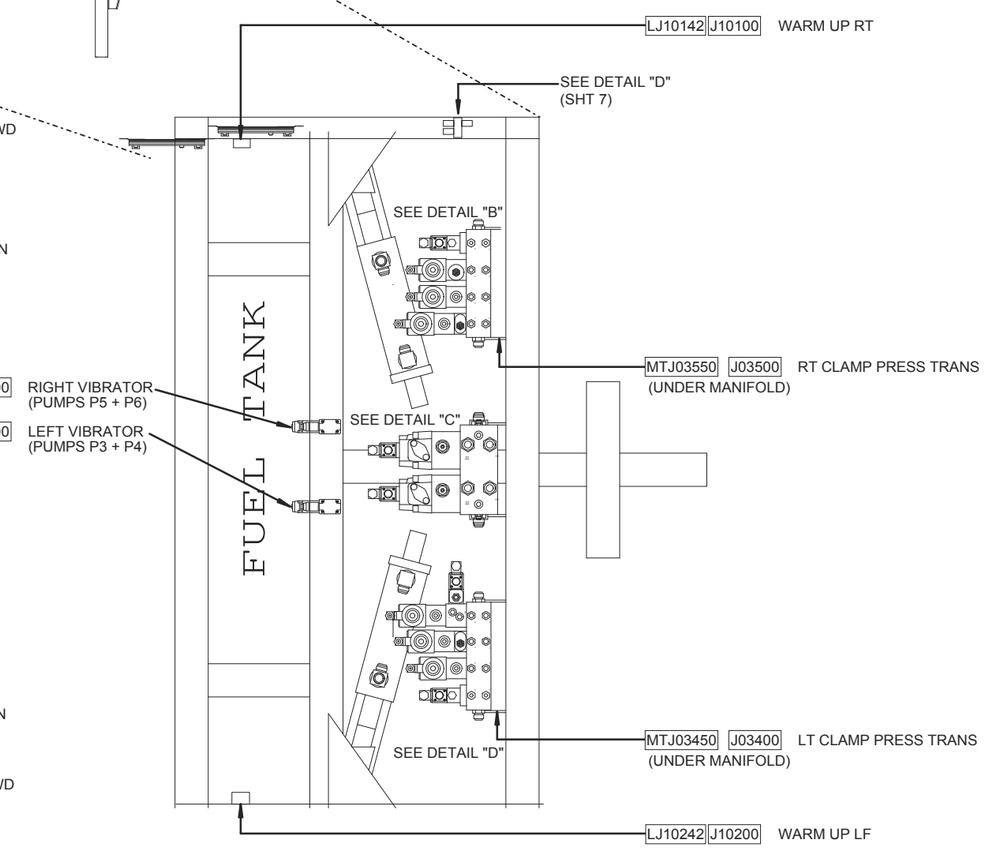

CONFIDENTIAL

©COPYRIGHT 2011 HARSCO. THIS DRAWING OR DOCUMENT IS THE PROPERTY OF HARSCO AND EMBODIES CONFIDENTIAL INFORMATION, TRADE SECRET INFORMATION, AND/OR KNOW-HOW THAT IS THE PROPERTY OF HARSCO. BY ACCEPTING THIS DRAWING OR DOCUMENT, THE RECIPIENT AGREES (1) NOT TO PROVIDE, OR OTHERWISE MAKE AVAILABLE, THE DRAWING OR DOCUMENT, OR ANY INFORMATION OR KNOW-HOW EMBODIED THEREIN, TO ANY THIRD PARTY AND (2) NOT TO REPRODUCE OR USE THE DRAWING OR DOCUMENT TO MANUFACTURE ANY APPARATUS OR DEVICE, WITHOUT THE PRIOR WRITTEN AUTHORIZATION OF HARSCO.

CHANGE #		REVISION	DR	DATE
EC501059	A	NEW RELEASE	CJW	05/11
EC501128	B	ADDED NEW VIEWS, UPDATED CABLES	CJW	05/11
EC501418	C	REMOVED SAFETY RELAYS, UPDATED AS BUILT	CJW	06/11
EC501821	D	UPDATE AS BUILT- CABLE PART NUMBERS	CJW	08/11
EC502003	E	SWAP J04400/J04800 AND J05600/J05700 ON SHT 7 UPDATE SHT 21	CJW	09-22-11
EC502615	F	UPDATE CABLE CHARTS FOR SAT RADIO ON P.18	CJW	01-05-12
EC502851	G	UPDATE CABLES AS BUILT, SEE EC FOR CHANGE DETAIL	CJW	02-08-12
EC503310	H	SEE EC FOR CHANGE DETAIL	CJW	04-09-12

DRAWING TITLE/DESCRIPTION:
JUPITER SYSTEM INSTALLATION
Solenoid Layout

MACHINE TYPE-MODEL:
MARK IV

E3 PROJECT FILE NAME:
MARK IV HD_10

SHEET NUMBER: 5
NUMBER OF JUPITER SHEETS: -
TOTAL NUMBER OF SHEETS: 23

DRAWN BY: CJW
REL. DATE: 05/11
SIZE: D
SCALE:

HARSCO RAIL

E3 DRAWING
5007956

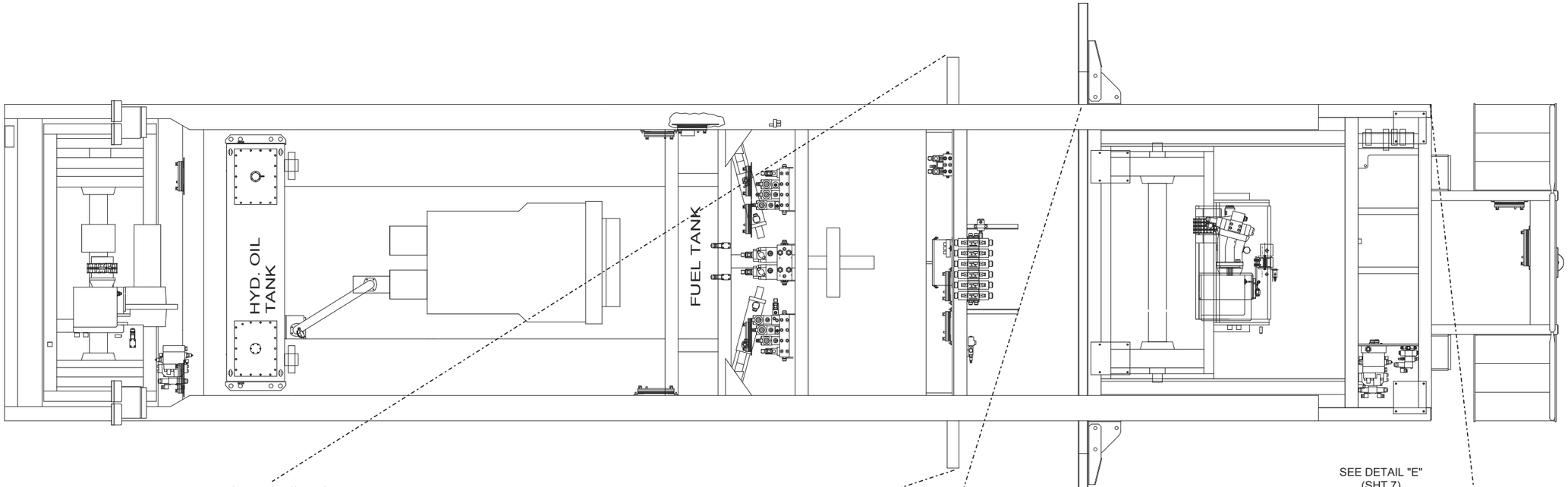

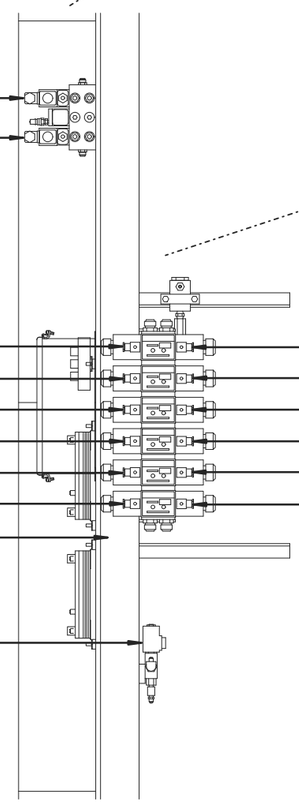

PLUG LOCATION

TOP	LJ08142	J08100	RT WH TRVS OUT	(SOL A: OUT)
BOTTOM	LJ08242	J08200	RT WH TRVS IN	(SOL B: IN)
TOP	LJ08342	J08300	LT WH TRVS OUT	(SOL A: OUT)
BOTTOM	LJ08442	J08400	LT WH TRVS IN	(SOL B: IN)

LJ08542	J08500	RT WH SQZ OUT	(SOL A: OUT)
LJ07742	J07700	RT WH VLV1 UPFD	(SOL A: UPFEED)
LJ07542	J07500	RT WH VLV2 UPFD	(SOL A: UPFEED)
LJ07342	J07300	LF WH VLV2 UPFD	(SOL A: UPFEED)
LJ07142	J07100	LF WH VLV1 UPFD	(SOL A: UPFEED)
LJ08742	J08700	LT WH SQZ OUT	(SOL A: OUT)
MTJ03250	J03200	WH SQZ PRESS TRANS (UNDER MANIFOLD)	
LJ12842	J12800	DECEL VALVE	(SOL A: ON)

LJ08642	J08600	RT WH SQZ IN	(SOL B: IN)
LJ07842	J07800	RT WH VLV1 DWNFD	(SOL B: DOWNFEED)
LJ07642	J07600	RT WH VLV2 DWNFD	(SOL B: DOWNFEED)
LJ07442	J07400	LF WH VLV2 DWNFD	(SOL B: DOWNFEED)
LJ07242	J07200	LF WH VLV1 DWNFD	(SOL B: DOWNFEED)
LJ08842	J08800	LT WH SQZ IN	(SOL B: IN)

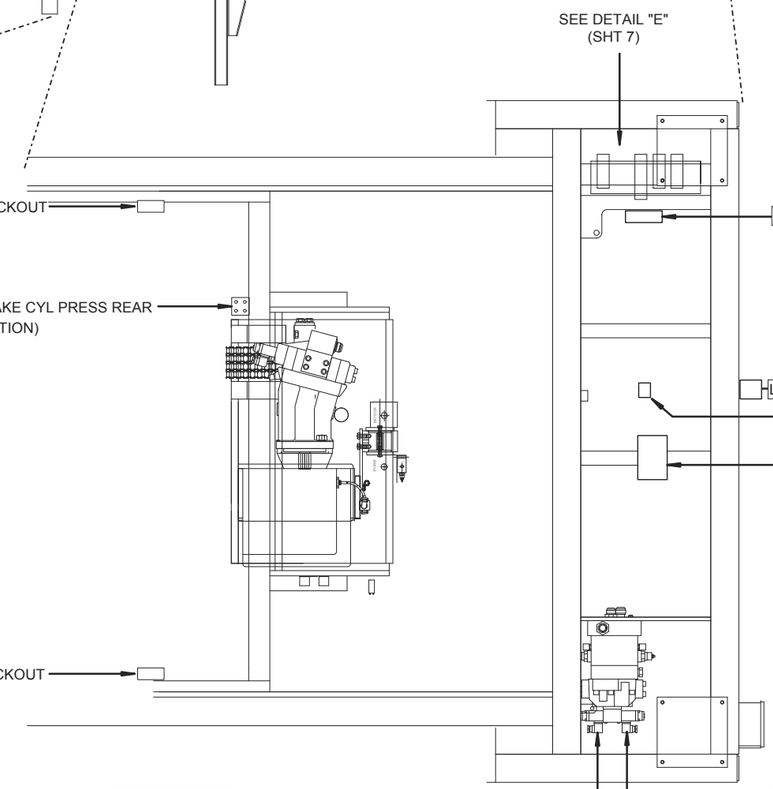

LJ04642	J04600	RR R SUSP LOCKOUT	
MTJ03750	J03700	BRAKE CYL PRESS REAR (OPTION)	
LJ04542	J04500	RR L SUSP LOCKOUT	
LJ05542	J05500	AIR HORN VALVE	
LSJ02A234		REAR MOTION ALARM	
S3180		BRAKE PRESS SWITCH (REF)	
L1220		E-STOP BRAKE VALVE (REF)	
LJ04142	J04100	REAR AXLE REV	(SOL B)
LJ04242	J04200	REAR AXLE FWD	(SOL A)

(H) (H)

CONFIDENTIAL

©COPYRIGHT 2011 HARSCO. THIS DRAWING OR DOCUMENT IS THE PROPERTY OF HARSCO AND EMBODIES CONFIDENTIAL INFORMATION, TRADE SECRET INFORMATION, AND/OR KNOW-HOW THAT IS THE PROPERTY OF HARSCO. BY ACCEPTING THIS DRAWING OR DOCUMENT, THE RECIPIENT AGREES (1) NOT TO PROVIDE, OR OTHERWISE MAKE AVAILABLE, THE DRAWING OR DOCUMENT, OR ANY INFORMATION OR KNOW-HOW EMBODIED THEREIN, TO ANY THIRD PARTY AND (2) NOT TO REPRODUCE OR USE THE DRAWING OR DOCUMENT TO MANUFACTURE ANY APPARATUS OR DEVICE, WITHOUT THE PRIOR WRITTEN AUTHORIZATION OF HARSCO.

CHANGE #		REVISION	DR	DATE
EC501059	A	NEW RELEASE	CJW	05/11
EC501128	B	ADDED NEW VIEWS, UPDATED CABLES	CJW	05/11
EC501418	C	REMOVED SAFETY RELAYS, UPDATED AS BUILT	CJW	06/11
EC501821	D	UPDATE AS BUILT- CABLE PART NUMBERS	CJW	08/11
EC502003	E	SWAP J04400/J04800 AND J05600/J05700 ON SHT 7 UPDATE SHT 21	CJW	09-22-11
EC502615	F	UPDATE CABLE CHARTS FOR SAT RADIO ON P.18	CJW	01-05-12
EC502851	G	UPDATE CABLES AS BUILT, SEE EC FOR CHANGE DETAIL	CJW	02-08-12
EC503310	H	SEE EC FOR CHANGE DETAIL	CJW	04-09-12

DRAWING TITLE/DESCRIPTION:
JUPITER SYSTEM INSTALLATION
Solenoid Layout

MACHINE TYPE-MODEL:
MARK IV

E3 PROJECT FILE NAME:
MARK IV HD_10

SHEET NUMBER: 6
NUMBER OF JUPITER SHEETS: -
TOTAL NUMBER OF SHEETS: 23

DRAWN BY: CJW
REL. DATE: 05/11
SIZE: D
SCALE:

HARSCO RAIL

E3 DRAWING
5007956

DETAIL "D"

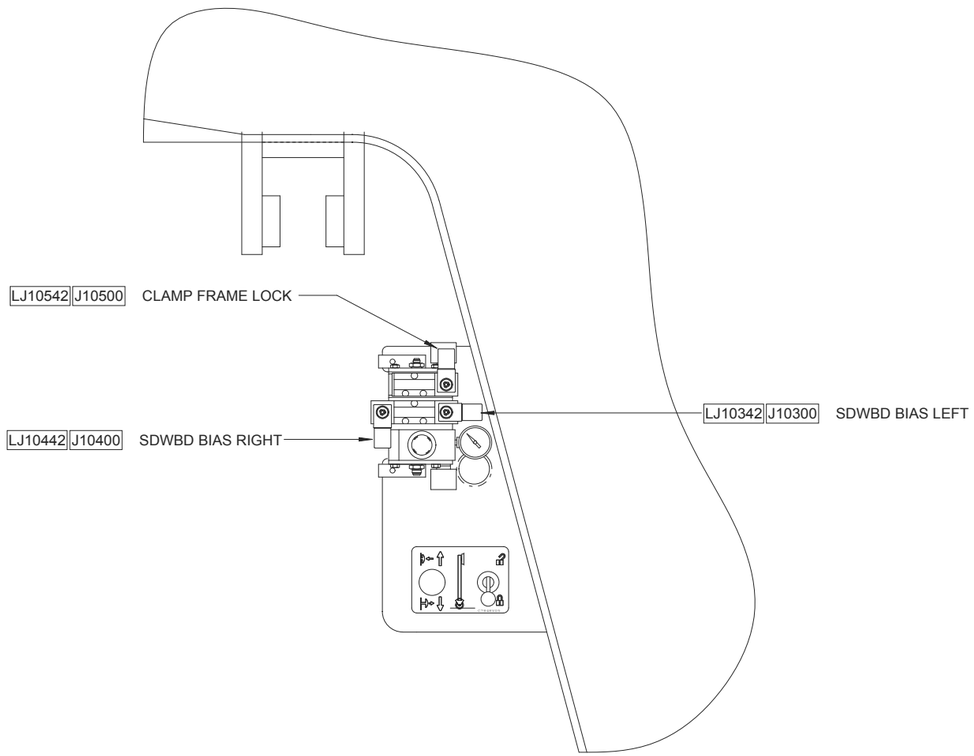

DETAIL "E"

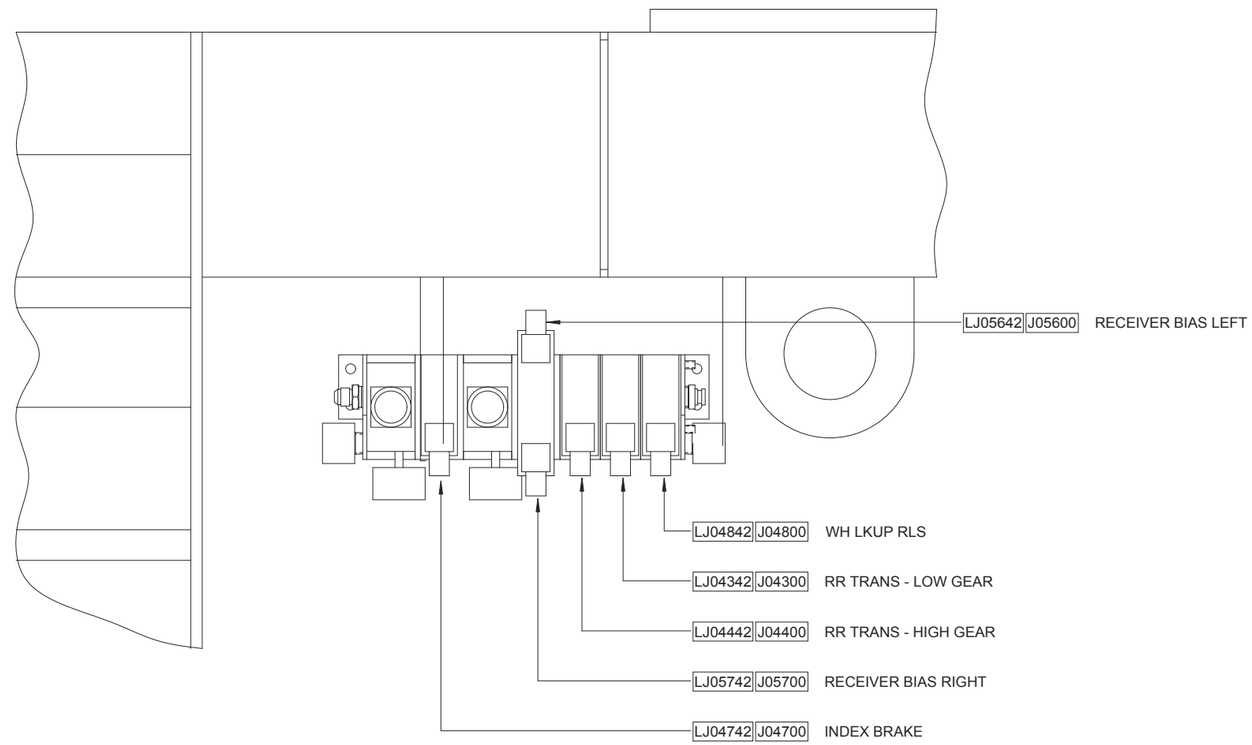

CONFIDENTIAL

©COPYRIGHT 2011 HARSCO. THIS DRAWING OR DOCUMENT IS THE PROPERTY OF HARSCO AND EMBODIES CONFIDENTIAL INFORMATION, TRADE SECRET INFORMATION, AND/OR KNOW-HOW THAT IS THE PROPERTY OF HARSCO. BY ACCEPTING THIS DRAWING OR DOCUMENT, THE RECIPIENT AGREES (1) NOT TO PROVIDE, OR OTHERWISE MAKE AVAILABLE, THE DRAWING OR DOCUMENT, OR ANY INFORMATION OR KNOW-HOW EMBODIED THEREIN, TO ANY THIRD PARTY AND (2) NOT TO REPRODUCE OR USE THE DRAWING OR DOCUMENT TO MANUFACTURE ANY APPARATUS OR DEVICE, WITHOUT THE PRIOR WRITTEN AUTHORIZATION OF HARSCO.

CHANGE #		REVISION	DR	DATE
EC501059	A	NEW RELEASE	CJW	05/11
EC501128	B	ADDED NEW VIEWS, UPDATED CABLES	CJW	05/11
EC501418	C	REMOVED SAFETY RELAYS, UPDATED AS BUILT	CJW	06/11
EC501821	D	UPDATE AS BUILT- CABLE PART NUMBERS	CJW	08/11
EC502003	E	SWAP J04400/J04800 AND J05600/J05700 ON SHT 7 UPDATE SHT 21	CJW	09-22-11
EC502615	F	UPDATE CABLE CHARTS FOR SAT RADIO ON P.18	CJW	01-05-12
EC502851	G	UPDATE CABLES AS BUILT, SEE EC FOR CHANGE DETAIL	CJW	02-08-12
EC503310	H	SEE EC FOR CHANGE DETAIL	CJW	04-09-12

DRAWING TITLE/DESCRIPTION:
JUPITER SYSTEM INSTALLATION
Solenoid Layout

MACHINE TYPE-MODEL:
MARK IV

E3 PROJECT FILE NAME:
MARK IV HD_10

SHEET NUMBER: 7
NUMBER OF JUPITER SHEETS: -
TOTAL NUMBER OF SHEETS: 23

DRAWN BY: CJW
REL. DATE: 05/11
SIZE: D
SCALE:

HARSCO RAIL

E3 DRAWING
5007956

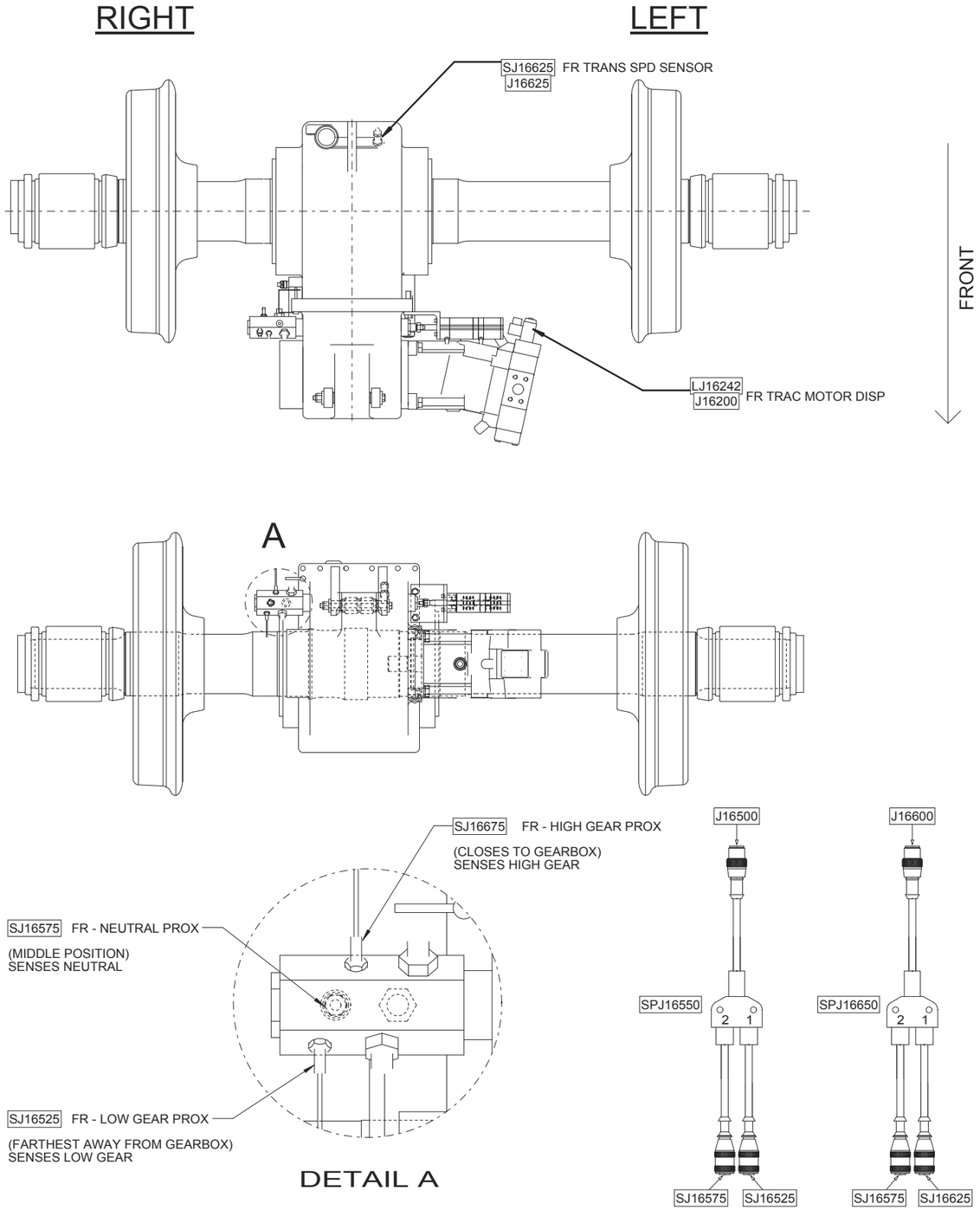

FRONT TRANSMISSION AND GEARBOX

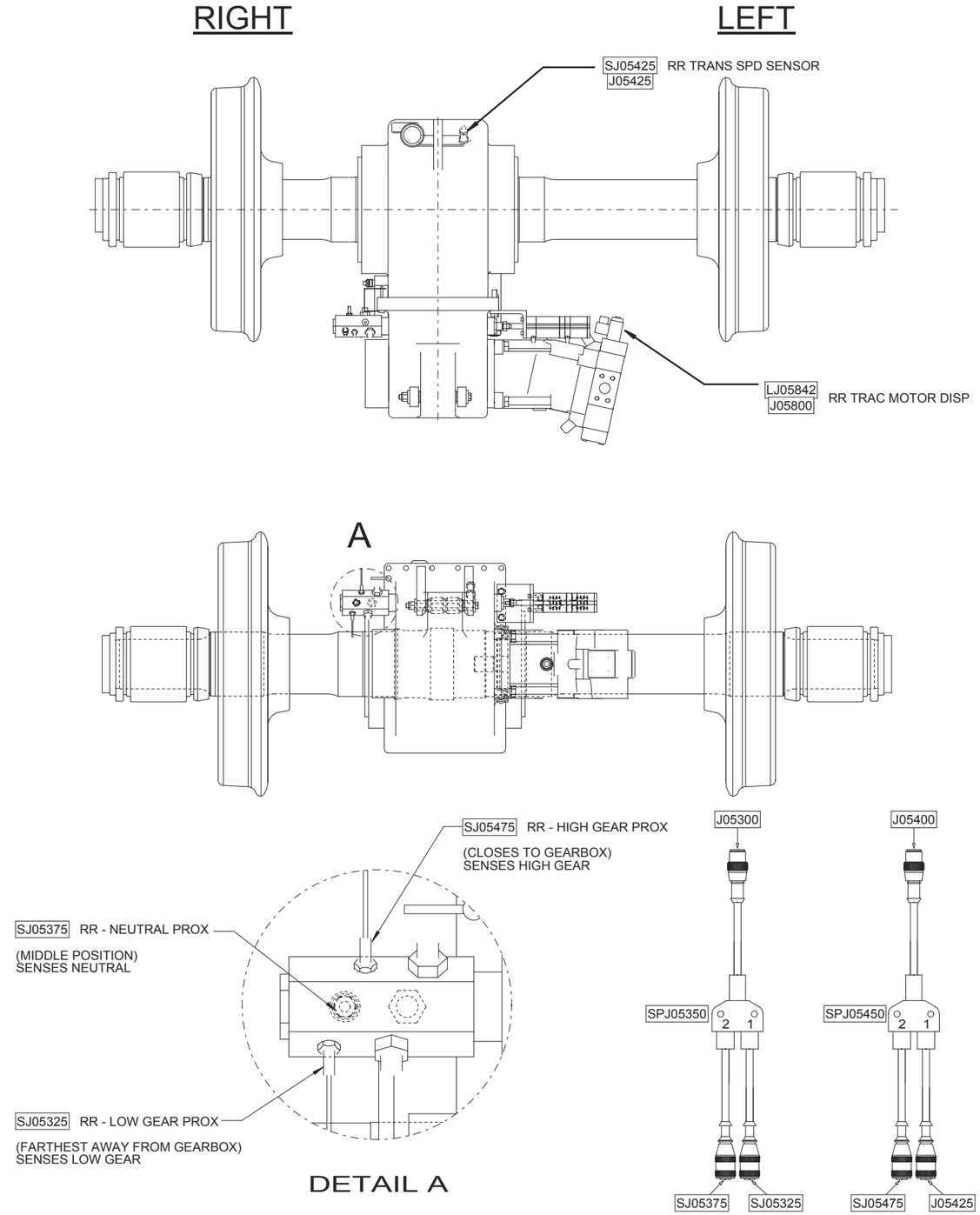

REAR TRANSMISSION AND GEARBOX

CONFIDENTIAL

©COPYRIGHT 2011 HARSCO. THIS DRAWING OR DOCUMENT IS THE PROPERTY OF HARSCO AND EMBODIES CONFIDENTIAL INFORMATION, TRADE SECRET INFORMATION, AND/OR KNOW-HOW THAT IS THE PROPERTY OF HARSCO. BY ACCEPTING THIS DRAWING OR DOCUMENT, THE RECIPIENT AGREES (1) NOT TO PROVIDE, OR OTHERWISE MAKE AVAILABLE, THE DRAWING OR DOCUMENT, OR ANY INFORMATION OR KNOW-HOW EMBODIED THEREIN, TO ANY THIRD PARTY AND (2) NOT TO REPRODUCE OR USE THE DRAWING OR DOCUMENT TO MANUFACTURE ANY APPARATUS OR DEVICE, WITHOUT THE PRIOR WRITTEN AUTHORIZATION OF HARSCO.

CHANGE #		REVISION	DR	DATE
EC501059	A	NEW RELEASE	CJW	05/11
EC501128	B	ADDED NEW VIEWS, UPDATED CABLES	CJW	05/11
EC501418	C	REMOVED SAFETY RELAYS, UPDATED AS BUILT	CJW	06/11
EC501821	D	UPDATE AS BUILT- CABLE PART NUMBERS	CJW	08/11
EC502003	E	SWAP J04400/J04800 AND J05600/J05700 ON SHT 7 UPDATE SHT 21	CJW	09-22-11
EC502615	F	UPDATE CABLE CHARTS FOR SAT RADIO ON P.18	CJW	01-05-12
EC502851	G	UPDATE CABLES AS BUILT, SEE EC FOR CHANGE DETAIL	CJW	02-08-12
EC503310	H	SEE EC FOR CHANGE DETAIL	CJW	04-09-12

DRAWING TITLE/DESCRIPTION:
JUPITER SYSTEM INSTALLATION
Front and Rear Axles

MACHINE TYPE-MODEL:
MARK IV

E3 PROJECT FILE NAME:
MARK IV HD_10

SHEET NUMBER: 8
NUMBER OF JUPITER SHEETS: -
TOTAL NUMBER OF SHEETS: 23

DRAWN BY: CJW
REL. DATE: 05/11
SIZE: D
SCALE:

HARSCO RAIL

E3 DRAWING

5007956

DETAIL "I"

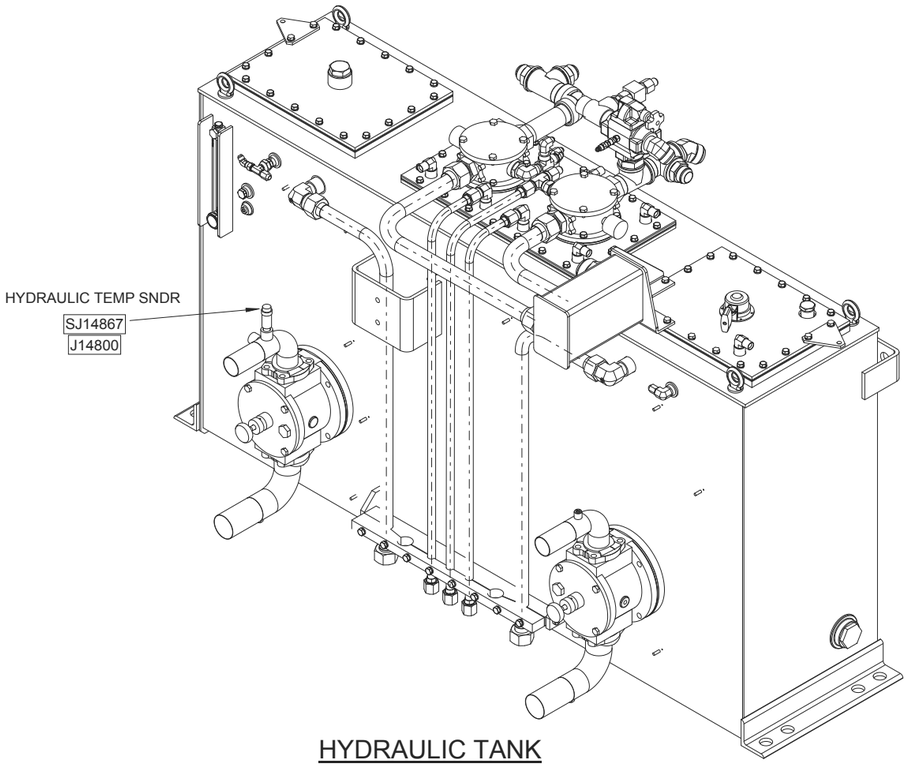

HYDRAULIC TANK

DETAIL "J"

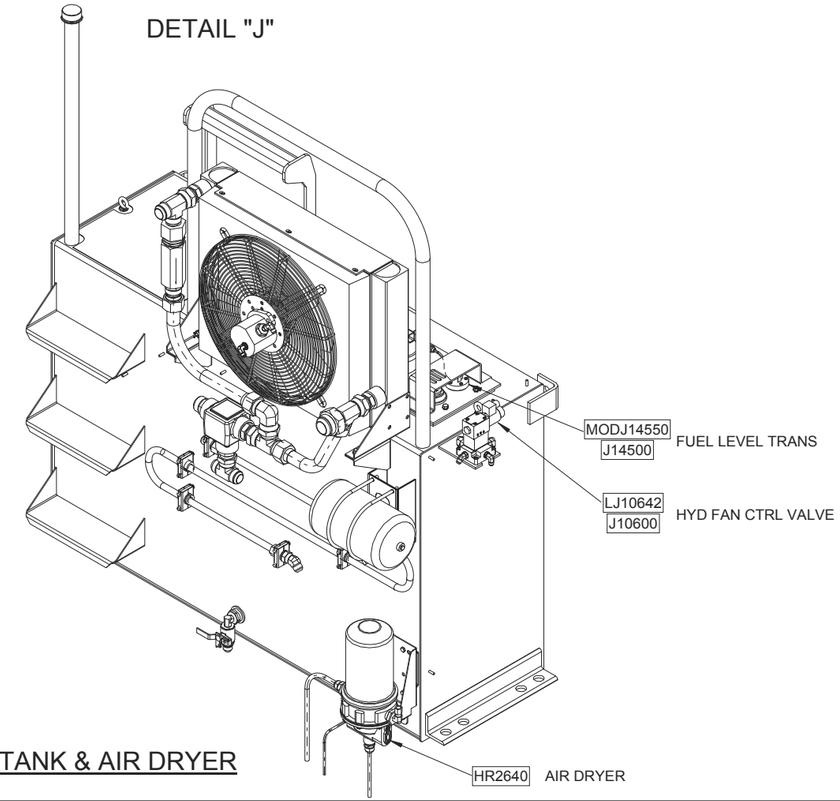

FUEL TANK & AIR DRYER

DETAIL "K"

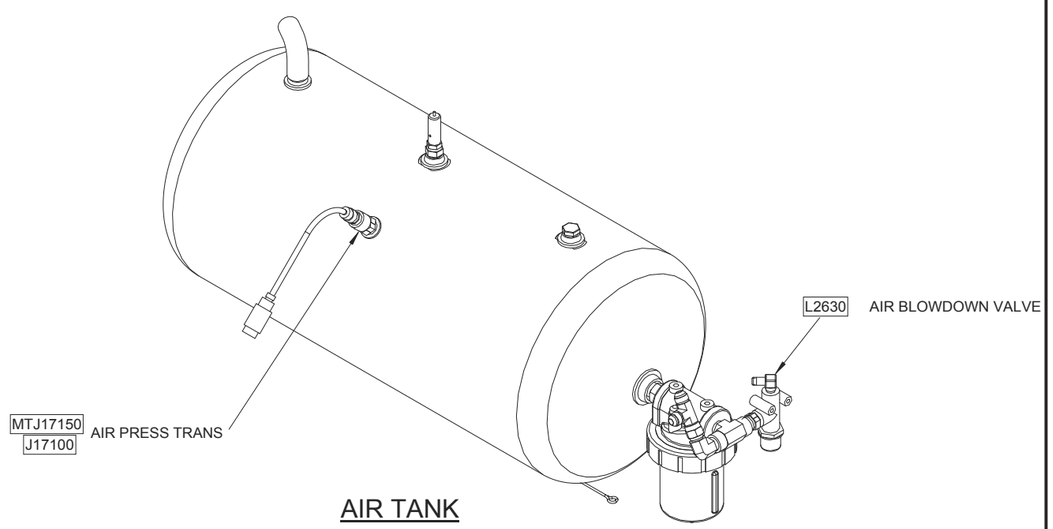

AIR TANK

DETAIL "L"

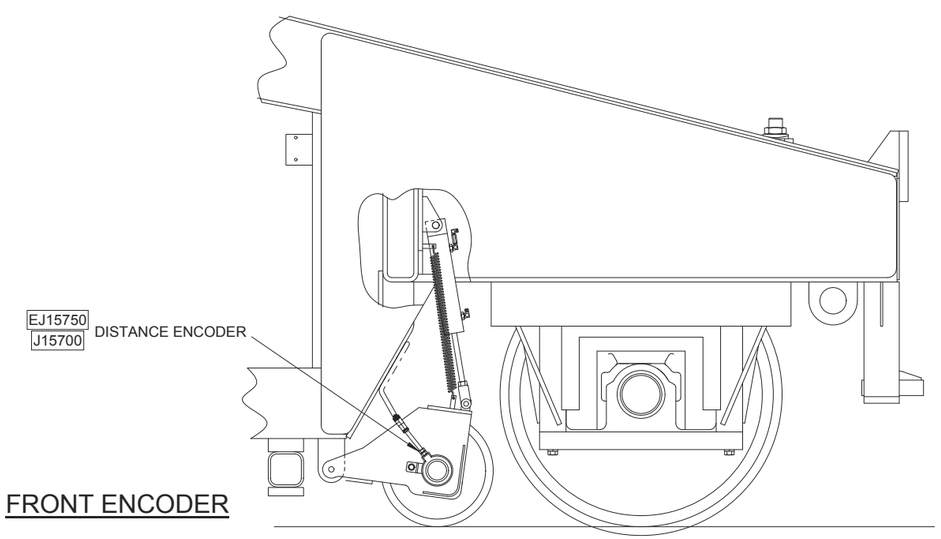

FRONT ENCODER

CONFIDENTIAL

©COPYRIGHT 2011 HARSCO. THIS DRAWING OR DOCUMENT IS THE PROPERTY OF HARSCO AND EMBODIES CONFIDENTIAL INFORMATION, TRADE SECRET INFORMATION, AND/OR KNOW-HOW THAT IS THE PROPERTY OF HARSCO. BY ACCEPTING THIS DRAWING OR DOCUMENT, THE RECIPIENT AGREES (1) NOT TO PROVIDE, OR OTHERWISE MAKE AVAILABLE, THE DRAWING OR DOCUMENT, OR ANY INFORMATION OR KNOW-HOW EMBODIED THEREIN, TO ANY THIRD PARTY AND (2) NOT TO REPRODUCE OR USE THE DRAWING OR DOCUMENT TO MANUFACTURE ANY APPARATUS OR DEVICE, WITHOUT THE PRIOR WRITTEN AUTHORIZATION OF HARSCO.

CHANGE #		REVISION	DR	DATE
EC501059	A	NEW RELEASE	CJW	05/11
EC501128	B	ADDED NEW VIEWS, UPDATED CABLES	CJW	05/11
EC501418	C	REMOVED SAFETY RELAYS, UPDATED AS BUILT	CJW	06/11
EC501821	D	UPDATE AS BUILT- CABLE PART NUMBERS	CJW	08/11
EC502003	E	SWAP J04400/J04800 AND J05600/J05700 ON SHT 7 UPDATE SHT 21	CJW	09-22-11
EC502615	F	UPDATE CABLE CHARTS FOR SAT RADIO ON P.18	CJW	01-05-12
EC502851	G	UPDATE CABLES AS BUILT, SEE EC FOR CHANGE DETAIL	CJW	02-08-12
EC503310	H	SEE EC FOR CHANGE DETAIL	CJW	04-09-12

DRAWING TITLE/DESCRIPTION:
JUPITER SYSTEM INSTALLATION
Device Layout

MACHINE TYPE-MODEL:
MARK IV

E3 PROJECT FILE NAME:
MARK IV HD_10

SHEET NUMBER: 9
NUMBER OF JUPITER SHEETS: -
TOTAL NUMBER OF SHEETS: 23

DRAWN BY: CJW
REL. DATE: 05/11
SIZE: D
SCALE:

HARSCO RAIL

E3 DRAWING
5007956

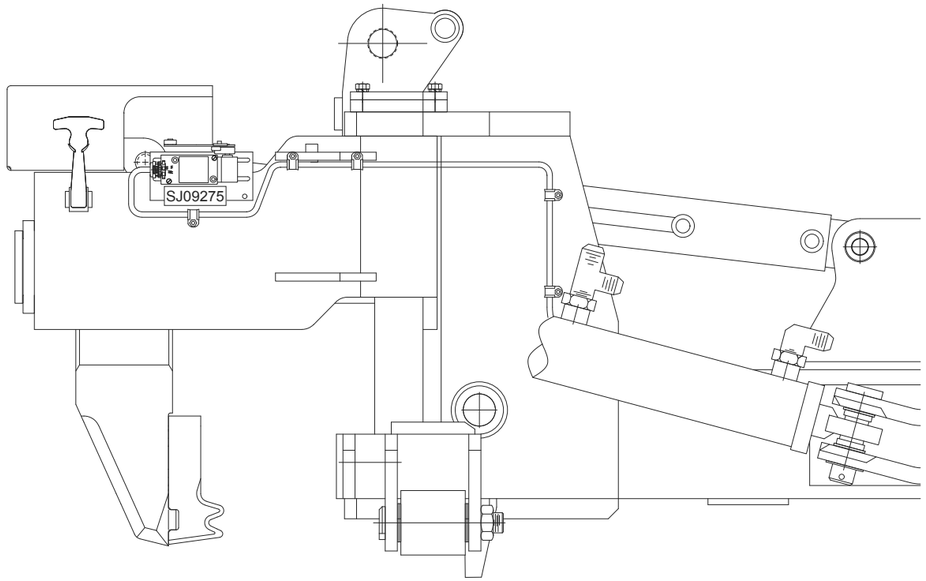

REAR RIGHT VIEW OF COMBO CLAMP

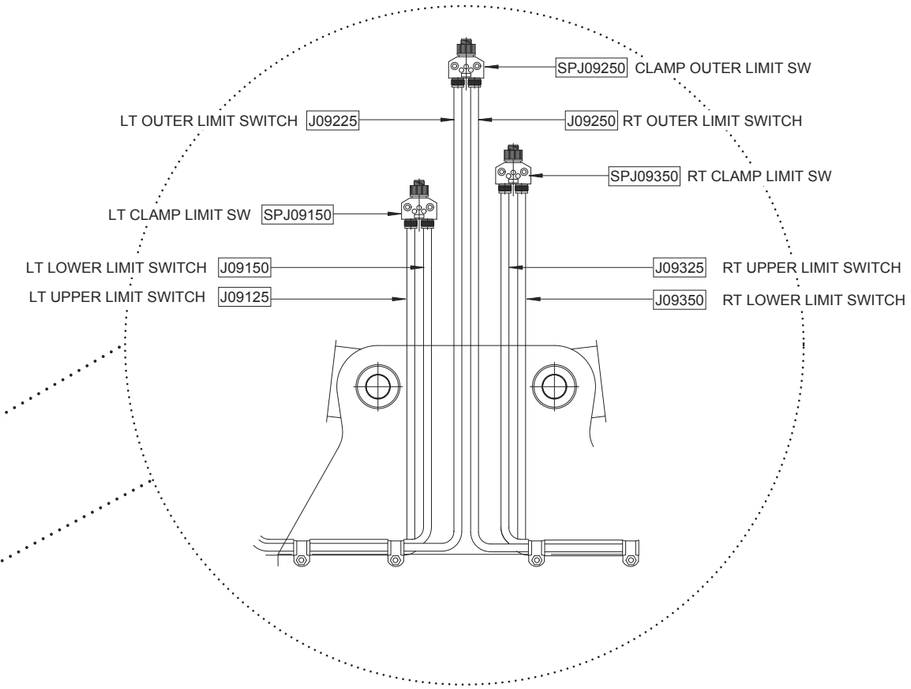

DETAIL "M"

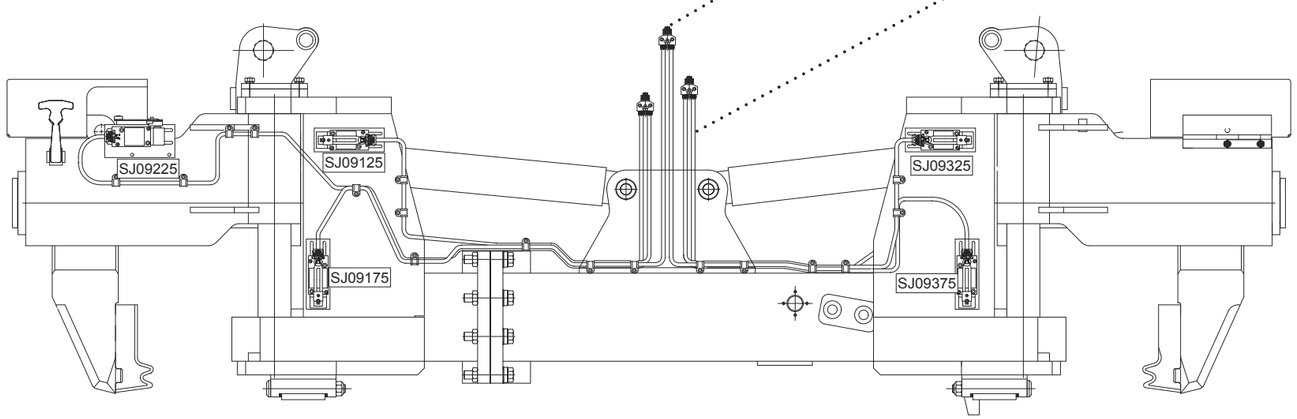

FRONT VIEW OF COMBO CLAMP

CONFIDENTIAL

©COPYRIGHT 2011 HARSCO. THIS DRAWING OR DOCUMENT IS THE PROPERTY OF HARSCO AND EMBODIES CONFIDENTIAL INFORMATION, TRADE SECRET INFORMATION, AND/OR KNOW-HOW THAT IS THE PROPERTY OF HARSCO. BY ACCEPTING THIS DRAWING OR DOCUMENT, THE RECIPIENT AGREES (1) NOT TO PROVIDE, OR OTHERWISE MAKE AVAILABLE, THE DRAWING OR DOCUMENT, OR ANY INFORMATION OR KNOW-HOW EMBODIED THEREIN, TO ANY THIRD PARTY AND (2) NOT TO REPRODUCE OR USE THE DRAWING OR DOCUMENT TO MANUFACTURE ANY APPARATUS OR DEVICE, WITHOUT THE PRIOR WRITTEN AUTHORIZATION OF HARSCO.

CHANGE #		REVISION	DR	DATE
EC501059	A	NEW RELEASE	CJW	05/11
EC501128	B	ADDED NEW VIEWS, UPDATED CABLES	CJW	05/11
EC501418	C	REMOVED SAFETY RELAYS, UPDATED AS BUILT	CJW	06/11
EC501821	D	UPDATE AS BUILT- CABLE PART NUMBERS	CJW	08/11
EC502003	E	SWAP J04400/J04800 AND J05600/J05700 ON SHT 7 UPDATE SHT 21	CJW	09-22-11
EC502615	F	UPDATE CABLE CHARTS FOR SAT RADIO ON P.18	CJW	01-05-12
EC502851	G	UPDATE CABLES AS BUILT, SEE EC FOR CHANGE DETAIL	CJW	02-08-12
EC503310	H	SEE EC FOR CHANGE DETAIL	CJW	04-09-12

DRAWING TITLE/DESCRIPTION:
JUPITER SYSTEM INSTALLATION
Combo Clamp Limit Switches

MACHINE TYPE-MODEL:
MARK IV

E3 PROJECT FILE NAME:
MARK IV HD_10

SHEET NUMBER: 10
NUMBER OF JUPITER SHEETS: -
TOTAL NUMBER OF SHEETS: 23

DRAWN BY: CJW
REL. DATE: 05/11
SIZE: D
SCALE:

HARSCO RAIL

E3 DRAWING
5007956

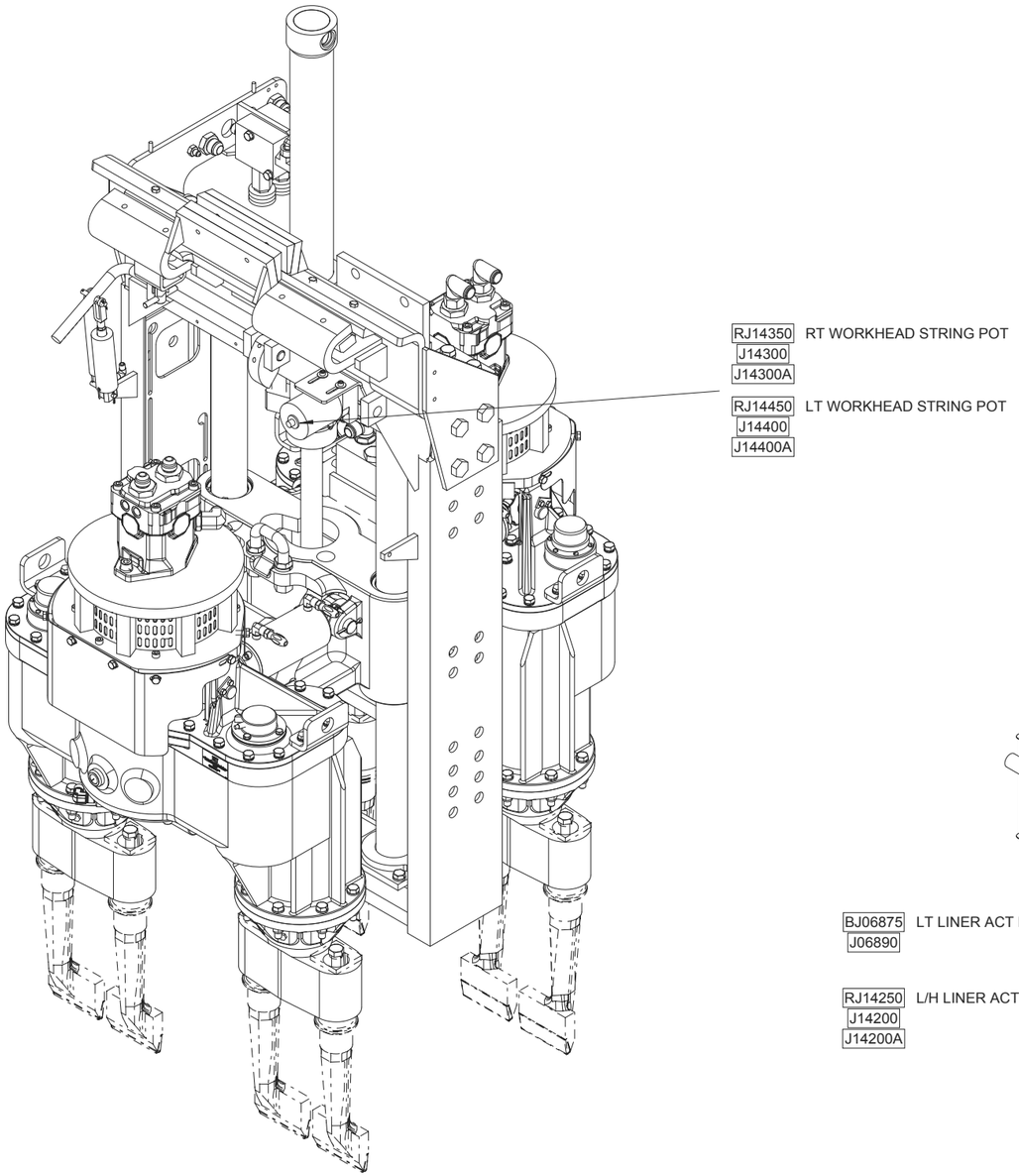

WORKHEAD R/H & L/H

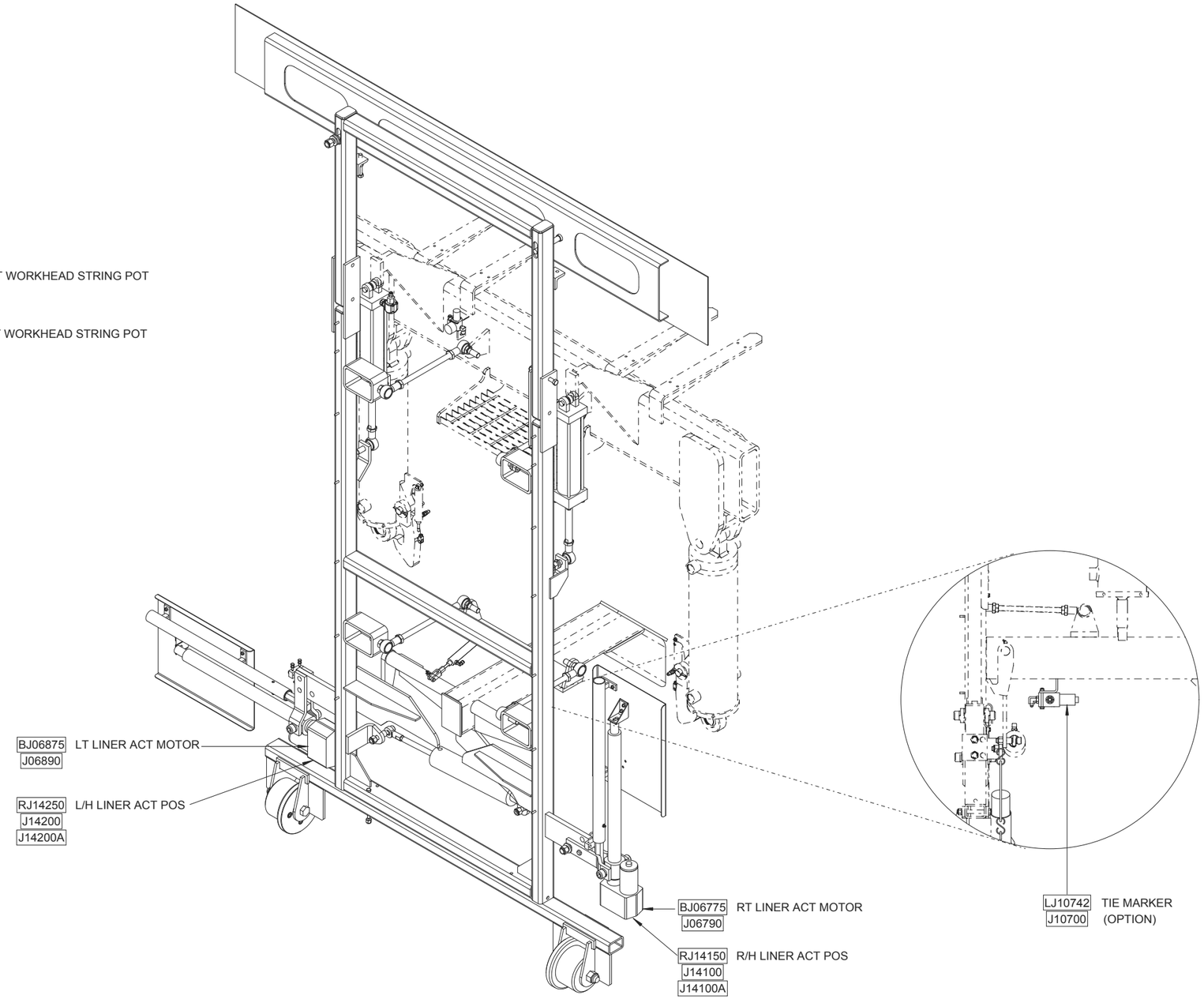

SHADOWBOARD & LINER FLAGS

CONFIDENTIAL

©COPYRIGHT 2011 HARSCO. THIS DRAWING OR DOCUMENT IS THE PROPERTY OF HARSCO AND EMBODIES CONFIDENTIAL INFORMATION, TRADE SECRET INFORMATION, AND/OR KNOW-HOW THAT IS THE PROPERTY OF HARSCO. BY ACCEPTING THIS DRAWING OR DOCUMENT, THE RECIPIENT AGREES (1) NOT TO PROVIDE, OR OTHERWISE MAKE AVAILABLE, THE DRAWING OR DOCUMENT, OR ANY INFORMATION OR KNOW-HOW EMBODIED THEREIN, TO ANY THIRD PARTY AND (2) NOT TO REPRODUCE OR USE THE DRAWING OR DOCUMENT TO MANUFACTURE ANY APPARATUS OR DEVICE, WITHOUT THE PRIOR WRITTEN AUTHORIZATION OF HARSCO.

CHANGE #		REVISION	DR	DATE
EC501059	A	NEW RELEASE	CJW	05/11
EC501128	B	ADDED NEW VIEWS, UPDATED CABLES	CJW	05/11
EC501418	C	REMOVED SAFETY RELAYS, UPDATED AS BUILT	CJW	06/11
EC501821	D	UPDATE AS BUILT- CABLE PART NUMBERS	CJW	08/11
EC502003	E	SWAP J04400/J04800 AND J05600/J05700 ON SHT 7 UPDATE SHT 21	CJW	09-22-11
EC502615	F	UPDATE CABLE CHARTS FOR SAT RADIO ON P.18	CJW	01-05-12
EC502851	G	UPDATE CABLES AS BUILT, SEE EC FOR CHANGE DETAIL	CJW	02-08-12
EC503310	H	SEE EC FOR CHANGE DETAIL	CJW	04-09-12

DRAWING TITLE/DESCRIPTION:
JUPITER SYSTEM INSTALLATION
Workhead and Shadowboard

MACHINE TYPE-MODEL:
MARK IV

E3 PROJECT FILE NAME:
MARK IV HD_10

SHEET NUMBER: 11
NUMBER OF JUPITER SHEETS: -
TOTAL NUMBER OF SHEETS: 23

DRAWN BY: CJW
REL. DATE: 05/11
SIZE: D
SCALE:

HARSCO RAIL

E3 DRAWING
5007956

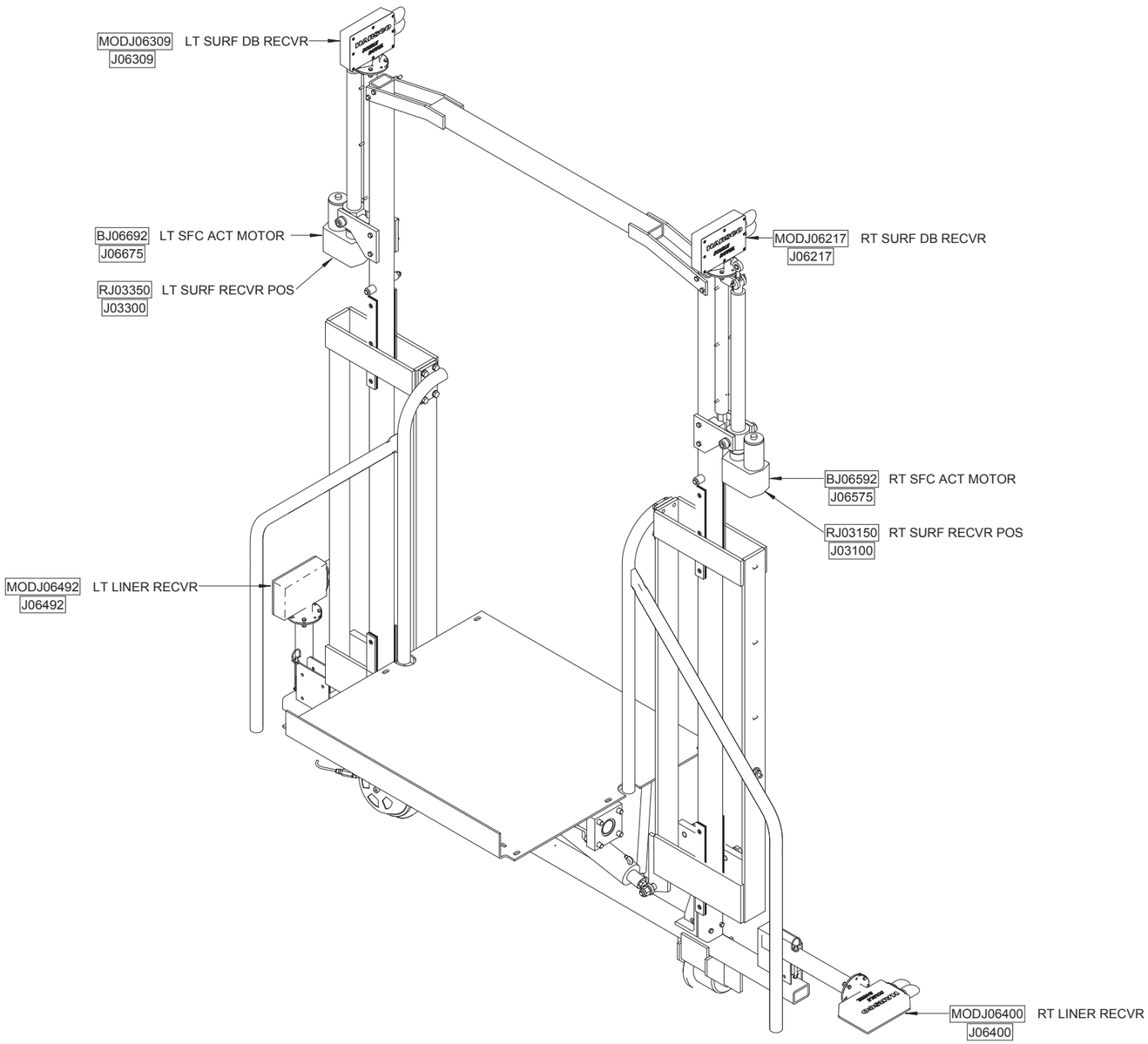

SURFACING & LINING RECEIVERS

CONFIDENTIAL

©COPYRIGHT 2011 HARSCO. THIS DRAWING OR DOCUMENT IS THE PROPERTY OF HARSCO AND EMBODIES CONFIDENTIAL INFORMATION, TRADE SECRET INFORMATION, AND/OR KNOW-HOW THAT IS THE PROPERTY OF HARSCO. BY ACCEPTING THIS DRAWING OR DOCUMENT, THE RECIPIENT AGREES (1) NOT TO PROVIDE, OR OTHERWISE MAKE AVAILABLE, THE DRAWING OR DOCUMENT, OR ANY INFORMATION OR KNOW-HOW EMBODIED THEREIN, TO ANY THIRD PARTY AND (2) NOT TO REPRODUCE OR USE THE DRAWING OR DOCUMENT TO MANUFACTURE ANY APPARATUS OR DEVICE, WITHOUT THE PRIOR WRITTEN AUTHORIZATION OF HARSCO.

CHANGE #		REVISION	DR	DATE
EC501059	A	NEW RELEASE	CJW	05/11
EC501128	B	ADDED NEW VIEWS, UPDATED CABLES	CJW	05/11
EC501418	C	REMOVED SAFETY RELAYS, UPDATED AS BUILT	CJW	06/11
EC501821	D	UPDATE AS BUILT- CABLE PART NUMBERS	CJW	08/11
EC502003	E	SWAP J04400/J04800 AND J05600/J05700 ON SHT 7 UPDATE SHT 21	CJW	09-22-11
EC502615	F	UPDATE CABLE CHARTS FOR SAT RADIO ON P.18	CJW	01-05-12
EC502851	G	UPDATE CABLES AS BUILT, SEE EC FOR CHANGE DETAIL	CJW	02-08-12
EC503310	H	SEE EC FOR CHANGE DETAIL	CJW	04-09-12

DRAWING TITLE/DESCRIPTION:
JUPITER SYSTEM INSTALLATION
Light Receivers

MACHINE TYPE-MODEL:
MARK IV

E3 PROJECT FILE NAME:
MARK IV HD_10

SHEET NUMBER: 12
NUMBER OF JUPITER SHEETS: -
TOTAL NUMBER OF SHEETS: 23

DRAWN BY: CJW
REL. DATE: 05/11
SIZE: D
SCALE:

HARSCO RAIL

E3 DRAWING
5007956

CAN POWER

CAN:03 POWER — JUP INSTALL — J03FP 4022334 — CABLE ASSEMBLY, M12 MCB — 410/2 120/2 220/1

RUN	COLOR	WIRE #	FROM	TERM NO.	TO	TERM NO.
1	W-1	4130	CAN:03:FP	EXISTS	TB2:3	-
2	W-2	4130	CAN:03:FP	EXISTS	TB2:3	-
3	W-3	000W	CAN:03:FP	EXISTS	TB4:4	-
4	W-4	000W	CAN:03:FP	EXISTS	TB4:4	-
5	W-5	**NC**	CAN:03:FP	EXISTS	-	-

CAN:04 POWER — JUP INSTALL — J04FP_A 4022334 — CABLE ASSEMBLY, M12 MCB — 410/2 120/2 220/1

RUN	COLOR	WIRE #	FROM	TERM NO.	TO	TERM NO.
1	W-1	4140	CAN:04:FPA	EXISTS	TB2:5	-
2	W-2	4140	CAN:04:FPA	EXISTS	TB2:5	-
3	W-3	000W	CAN:04:FPA	EXISTS	TB4:7	-
4	W-4	000W	CAN:04:FPA	EXISTS	TB4:7	-
5	W-5	**NC**	CAN:04:FPA	EXISTS	-	-

CAN:04 POWER — JUP INSTALL — J04FP_B 4022334 — CABLE ASSEMBLY, M12 MCB — 410/2 120/2 220/1

RUN	COLOR	WIRE #	FROM	TERM NO.	TO	TERM NO.
1	W-1	4140	CAN:04:FPB	EXISTS	TB2:5	-
2	W-2	4140	CAN:04:FPB	EXISTS	TB2:5	-
3	W-3	000W	CAN:04:FPB	EXISTS	TB4:7	-
4	W-4	000W	CAN:04:FPB	EXISTS	TB4:7	-
5	W-5	**NC**	CAN:04:FPB	EXISTS	-	-

CAN:05 POWER — JUP INSTALL — J05FP_A 4022334 — CABLE ASSEMBLY, M12 MCB — 410/2 120/2 220/1

RUN	COLOR	WIRE #	FROM	TERM NO.	TO	TERM NO.
1	W-1	4150	CAN:05:FPA	EXISTS	TB1:43	-
2	W-2	4150	CAN:05:FPA	EXISTS	TB1:43	-
3	W-3	000W	CAN:05:FPA	EXISTS	TB4:5	-
4	W-4	000W	CAN:05:FPA	EXISTS	TB4:5	-
5	W-5	**NC**	CAN:05:FPA	EXISTS	-	-

CAN:05 POWER — JUP INSTALL — J05FP_B 4022334 — CABLE ASSEMBLY, M12 MCB — 410/2 120/2 220/1

RUN	COLOR	WIRE #	FROM	TERM NO.	TO	TERM NO.
1	W-1	4150	CAN:05:FPB	EXISTS	TB1:43	-
2	W-2	4150	CAN:05:FPB	EXISTS	TB1:43	-
3	W-3	000W	CAN:05:FPB	EXISTS	TB4:5	-
4	W-4	000W	CAN:05:FPB	EXISTS	TB4:5	-
5	W-5	**NC**	CAN:05:FPB	EXISTS	-	-

CAN:07 POWER — JUP INSTALL — J07FP_A 3405078 — CABLE ASSEMBLY, M12 PDB — 410/2 120/2 530/1

RUN	COLOR	WIRE #	FROM	TERM NO.	TO	TERM NO.
1	W-1	4452	CAN:07:FPA	EXISTS	TB30:21	-
2	W-2	4452	CAN:07:FPA	EXISTS	TB30:21	-
3	W-3	000W	CAN:07:FPA	EXISTS	TB32:2	-
4	W-4	000W	CAN:07:FPA	EXISTS	TB32:2	-
5	W-5	**NC**	CAN:07:FPA	EXISTS	-	-

CAN:07 POWER — JUP INSTALL — J07FP_B 3405078 — CABLE ASSEMBLY, M12 PDB — 410/2 120/2 530/1

RUN	COLOR	WIRE #	FROM	TERM NO.	TO	TERM NO.
1	W-1	4452	CAN:07:FPB	EXISTS	TB30:21	-
2	W-2	4452	CAN:07:FPB	EXISTS	TB30:21	-
3	W-3	000W	CAN:07:FPB	EXISTS	TB32:2	-
4	W-4	000W	CAN:07:FPB	EXISTS	TB32:2	-
5	W-5	**NC**	CAN:07:FPB	EXISTS	-	-

CAN:08 POWER — JUP INSTALL — J08FP_A 3405078 — CABLE ASSEMBLY, M12 PDB — 410/2 120/2 530/1

RUN	COLOR	WIRE #	FROM	TERM NO.	TO	TERM NO.
1	W-1	4460	CAN:08:FPA	EXISTS	TB30:23	-
2	W-2	4460	CAN:08:FPA	EXISTS	TB30:23	-
3	W-3	000W	CAN:08:FPA	EXISTS	TB32:4	-
4	W-4	000W	CAN:08:FPA	EXISTS	TB32:4	-
5	W-5	**NC**	CAN:08:FPA	EXISTS	-	-

CAN POWER (CONT'D)

CAN:08 POWER — JUP INSTALL — J08FP_B 3405078 — CABLE ASSEMBLY, M12 PDB — 410/2 120/2 530/1

RUN	COLOR	WIRE #	FROM	TERM NO.	TO	TERM NO.
1	W-1	4460	CAN:08:FPB	EXISTS	TB30:23	-
2	W-2	4460	CAN:08:FPB	EXISTS	TB30:23	-
3	W-3	000W	CAN:08:FPB	EXISTS	TB32:4	-
4	W-4	000W	CAN:08:FPB	EXISTS	TB32:4	-
5	W-5	**NC**	CAN:08:FPB	EXISTS	-	-

CAN:09 POWER — JUP INSTALL — J09FP_A 4022334 — CABLE ASSEMBLY, M12 PDB — 410/2 120/2 220/1

RUN	COLOR	WIRE #	FROM	TERM NO.	TO	TERM NO.
1	W-1	4470	CAN:09:FPA	EXISTS	TB30:25	-
2	W-2	4470	CAN:09:FPA	EXISTS	TB30:25	-
3	W-3	000W	CAN:09:FPA	EXISTS	TB32:5	-
4	W-4	000W	CAN:09:FPA	EXISTS	TB32:5	-
5	W-5	**NC**	CAN:09:FPA	EXISTS	-	-

CAN:09 POWER — JUP INSTALL — J09FP_B 4022334 — CABLE ASSEMBLY, M12 PDB — 410/2 120/2 220/1

RUN	COLOR	WIRE #	FROM	TERM NO.	TO	TERM NO.
1	W-1	4470	CAN:09:FPB	EXISTS	TB30:25	-
2	W-2	4470	CAN:09:FPB	EXISTS	TB30:25	-
3	W-3	000W	CAN:09:FPB	EXISTS	TB32:5	-
4	W-4	000W	CAN:09:FPB	EXISTS	TB32:5	-
5	W-5	**NC**	CAN:09:FPB	EXISTS	-	-

CAN:10 POWER — JUP INSTALL — J10FP_A 3405078 — CABLE ASSEMBLY, M12 PDB — 410/2 120/2 530/1

RUN	COLOR	WIRE #	FROM	TERM NO.	TO	TERM NO.
1	W-1	4480	CAN:10:FPA	EXISTS	TB30:27	-
2	W-2	4480	CAN:10:FPA	EXISTS	TB30:27	-
3	W-3	000W	CAN:10:FPA	EXISTS	TB32:7	-
4	W-4	000W	CAN:10:FPA	EXISTS	TB32:7	-
5	W-5	**NC**	CAN:10:FPA	EXISTS	-	-

CAN:10 POWER — JUP INSTALL — J10FP_B 3405078 — CABLE ASSEMBLY, M12 PDB — 410/2 120/2 530/1

RUN	COLOR	WIRE #	FROM	TERM NO.	TO	TERM NO.
1	W-1	4480	CAN:10:FPB	EXISTS	TB30:27	-
2	W-2	4480	CAN:10:FPB	EXISTS	TB30:27	-
3	W-3	000W	CAN:10:FPB	EXISTS	TB32:7	-
4	W-4	000W	CAN:10:FPB	EXISTS	TB32:7	-
5	W-5	**NC**	CAN:10:FPB	EXISTS	-	-

CAN:11 POWER — JUP INSTALL — J11FP_A 4022334 — CABLE ASSEMBLY, M12 PDB — 410/2 120/2 220/1

RUN	COLOR	WIRE #	FROM	TERM NO.	TO	TERM NO.
1	W-1	4490	CAN:11:FPA	EXISTS	TB30:29	-
2	W-2	4490	CAN:11:FPA	EXISTS	TB30:29	-
3	W-3	000W	CAN:11:FPA	EXISTS	TB32:9	-
4	W-4	000W	CAN:11:FPA	EXISTS	TB32:9	-
5	W-5	**NC**	CAN:11:FPA	EXISTS	-	-

CAN:11 POWER — JUP INSTALL — J11FP_B 4022334 — CABLE ASSEMBLY, M12 PDB — 410/2 120/2 220/1

RUN	COLOR	WIRE #	FROM	TERM NO.	TO	TERM NO.
1	W-1	4490	CAN:11:FPB	EXISTS	TB30:29	-
2	W-2	4490	CAN:11:FPB	EXISTS	TB30:29	-
3	W-3	000W	CAN:11:FPB	EXISTS	TB32:9	-
4	W-4	000W	CAN:11:FPB	EXISTS	TB32:9	-
5	W-5	**NC**	CAN:11:FPB	EXISTS	-	-

CAN:12 POWER — JUP INSTALL — J12FP_A 4022334 — CABLE ASSEMBLY, M12 PDB — 410/2 120/2 220/1

RUN	COLOR	WIRE #	FROM	TERM NO.	TO	TERM NO.
1	W-1	4500	CAN:12:FPA	EXISTS	TB30:31	-
2	W-2	4500	CAN:12:FPA	EXISTS	TB30:31	-
3	W-3	000W	CAN:12:FPA	EXISTS	TB32:12	-
4	W-4	000W	CAN:12:FPA	EXISTS	TB32:12	-
5	W-5	**NC**	CAN:12:FPA	EXISTS	-	-

CAN POWER (CONT'D)

CAN:12 POWER — JUP INSTALL — J12FP_B 4022334 — CABLE ASSEMBLY, M12 PDB — 410/2 120/2 220/1

RUN	COLOR	WIRE #	FROM	TERM NO.	TO	TERM NO.
1	W-1	4500	CAN:12:FPB	EXISTS	TB30:31	-
2	W-2	4500	CAN:12:FPB	EXISTS	TB30:31	-
3	W-3	000W	CAN:12:FPB	EXISTS	TB32:12	-
4	W-4	000W	CAN:12:FPB	EXISTS	TB32:12	-
5	W-5	**NC**	CAN:12:FPB	EXISTS	-	-

CAN:13 POWER — JUP INSTALL — J13FP_A 4022334 — CABLE ASSEMBLY, M12 PDB — 410/2 120/2 220/1

RUN	COLOR	WIRE #	FROM	TERM NO.	TO	TERM NO.
1	W-1	4510	CAN:13:FPA	EXISTS	TB30:33	-
2	W-2	4510	CAN:13:FPA	EXISTS	TB30:33	-
3	W-3	000W	CAN:13:FPA	EXISTS	TB32:14	-
4	W-4	000W	CAN:13:FPA	EXISTS	TB32:14	-
5	W-5	**NC**	CAN:13:FPA	EXISTS	-	-

CAN:14 POWER — JUP INSTALL — J13FP_B 4022334 — CABLE ASSEMBLY, M12 PDB — 410/2 120/2 220/1

RUN	COLOR	WIRE #	FROM	TERM NO.	TO	TERM NO.
1	W-1	4510	CAN:13:FPB	EXISTS	TB30:33	-
2	W-2	4510	CAN:13:FPB	EXISTS	TB30:33	-
3	W-3	000W	CAN:13:FPB	EXISTS	TB32:14	-
4	W-4	000W	CAN:13:FPB	EXISTS	TB32:14	-
5	W-5	**NC**	CAN:13:FPB	EXISTS	-	-

CAN:14 POWER — JUP INSTALL — J14FP 4022334 — CABLE ASSEMBLY, M12 PDB — 410/2 120/2 220/1

RUN	COLOR	WIRE #	FROM	TERM NO.	TO	TERM NO.
1	W-1	4520	CAN:14:FP	EXISTS	TB30:34	-
2	W-2	4520	CAN:14:FP	EXISTS	TB30:34	-
3	W-3	000W	CAN:14:FP	EXISTS	TB32:15	-
4	W-4	000W	CAN:14:FP	EXISTS	TB32:15	-
5	W-5	**NC**	CAN:14:FP	EXISTS	-	-

CAN:15 POWER — JUP INSTALL — J15FP_A 4015775 — CABLE ASSEMBLY, M12 PDB — 410/2 120/2 110/1

RUN	COLOR	WIRE #	FROM	TERM NO.	TO	TERM NO.
1	W-1	4530	CAN:15:FPA	EXISTS	TB30:36	-
2	W-2	4530	CAN:15:FPA	EXISTS	TB30:36	-
3	W-3	000W	CAN:15:FPA	EXISTS	TB32:17	-
4	W-4	000W	CAN:15:FPA	EXISTS	TB32:17	-
5	W-5	**NC**	CAN:15:FPA	EXISTS	-	-

CAN:15 POWER — JUP INSTALL — J15FP_B 4015775 — CABLE ASSEMBLY, M12 PDB — 410/2 120/2 110/1

RUN	COLOR	WIRE #	FROM	TERM NO.	TO	TERM NO.
1	W-1	4530	CAN:15:FPB	EXISTS	TB30:36	-
2	W-2	4530	CAN:15:FPB	EXISTS	TB30:36	-
3	W-3	000W	CAN:15:FPB	EXISTS	TB32:17	-
4	W-4	000W	CAN:15:FPB	EXISTS	TB32:17	-
5	W-5	**NC**	CAN:15:FPB	EXISTS	-	-

CAN:16 POWER — JUP INSTALL — J16FP_A 4015775 — CABLE ASSEMBLY, M12 PDB — 410/2 120/2 110/1

RUN	COLOR	WIRE #	FROM	TERM NO.	TO	TERM NO.
1	W-1	4540	CAN:16:FPA	EXISTS	TB30:38	-
2	W-2	4540	CAN:16:FPA	EXISTS	TB30:38	-
3	W-3	000W	CAN:16:FPA	EXISTS	TB32:19	-
4	W-4	000W	CAN:16:FPA	EXISTS	TB32:19	-
5	W-5	**NC**	CAN:16:FPA	EXISTS	-	-

CAN:16 POWER — JUP INSTALL — J16FP_B 4015775 — CABLE ASSEMBLY, M12 PDB — 410/2 120/2 110/1

RUN	COLOR	WIRE #	FROM	TERM NO.	TO	TERM NO.
1	W-1	4540	CAN:16:FPB	EXISTS	TB30:38	-
2	W-2	4540	CAN:16:FPB	EXISTS	TB30:38	-
3	W-3	000W	CAN:16:FPB	EXISTS	TB32:19	-
4	W-4	000W	CAN:16:FPB	EXISTS	TB32:19	-
5	W-5	**NC**	CAN:16:FPB	EXISTS	-	-

CONFIDENTIAL

©COPYRIGHT 2011 HARSCO. THIS DRAWING OR DOCUMENT IS THE PROPERTY OF HARSCO AND EMBODIES CONFIDENTIAL INFORMATION, TRADE SECRET INFORMATION, AND/OR KNOW-HOW THAT IS THE PROPERTY OF HARSCO. BY ACCEPTING THIS DRAWING OR DOCUMENT, THE RECIPIENT AGREES (1) NOT TO PROVIDE, OR OTHERWISE MAKE AVAILABLE, THE DRAWING OR DOCUMENT, OR ANY INFORMATION OR KNOW-HOW EMBODIED THEREIN, TO ANY THIRD PARTY AND (2) NOT TO REPRODUCE OR USE THE DRAWING OR DOCUMENT TO MANUFACTURE ANY APPARATUS OR DEVICE, WITHOUT THE PRIOR WRITTEN AUTHORIZATION OF HARSCO.

CHANGE #		REVISION	DR	DATE
EC501059	A	NEW RELEASE	CJW	05/11
EC501128	B	ADDED NEW VIEWS, UPDATED CABLES	CJW	05/11
EC501418	C	REMOVED SAFETY RELAYS, UPDATED AS BUILT	CJW	06/11
EC501821	D	UPDATE AS BUILT- CABLE PART NUMBERS	CJW	08/11
EC502003	E	SWAP J04400/J04800 AND J05600/J05700 ON SHT 7 UPDATE SHT 21	CJW	09-22-11
EC502615	F	UPDATE CABLE CHARTS FOR SAT RADIO ON P.18	CJW	01-05-12
EC502851	G	UPDATE CABLES AS BUILT, SEE EC FOR CHANGE DETAIL	CJW	02-08-12
EC503310	H	SEE EC FOR CHANGE DETAIL	CJW	04-09-12

DRAWING TITLE/DESCRIPTION: JUPITER SYSTEM INSTALLATION
Cable Charts

MACHINE TYPE-MODEL: MARK IV

E3 PROJECT FILE NAME: MARK IV HD_10

SHEET NUMBER: 13
NUMBER OF JUPITER SHEETS: -
TOTAL NUMBER OF SHEETS: 23

DRAWN BY: CJW
REL. DATE: 05/11
SIZE: D
SCALE:

HARSCO RAIL

E3 DRAWING

5007956

CAN POWER (CONT'D)

CAN:17 POWER — J17FP — CABLE ASSEMBLY, M12
JUP INSTALL — 4015775 — PDB

410	120	110
2	2	1

RUN	COLOR	WIRE #	FROM	TERM NO.	TO	TERM NO.
1	W-1	3485	CAN:17:FP	EXISTS	TB30:50	-
2	W-2	3485	CAN:17:FP	EXISTS	TB30:50	-
3	W-3	000W	CAN:17:FP	EXISTS	TB32:20	-
4	W-4	000W	CAN:17:FP	EXISTS	TB32:20	-
5	W-5	**NC**	CAN:17:FP	EXISTS	-	-

CAN:18 POWER — J18FP — CABLE ASSEMBLY, M12 (REF)
OPT FILTER KITS — 4015775 — PDB

RUN	COLOR	WIRE #	FROM	TERM NO.	TO	TERM NO.
1	W-1	4560	CAN:18:FPA	EXISTS	TB30:51	-
2	W-2	4560	CAN:18:FPA	EXISTS	TB30:51	-
3	W-3	000W	CAN:18:FPA	EXISTS	TB32:21	-
4	W-4	000W	CAN:18:FPA	EXISTS	TB32:21	-
5	W-5	**NC**	CAN:18:FPA	EXISTS	-	-

CAN:03

RT SURF RECVR POS — J03100 — CABLE ASSEMBLY, M12
JUP INSTALL — 3401327 — RCV_BG

410	120	60
2	2	1

RUN	COLOR	WIRE #	FROM	TERM NO.	TO	TERM NO.
1	BK	-	CAN:03:C1	EXISTS	RJ03150:M12	EXISTS

WH SQZ PRESS TRANS — J03200 — CABLE ASSEMBLY, M12
JUP INSTALL — 3401329 — WORKHEAD

410	120	80
2	2	1

RUN	COLOR	WIRE #	FROM	TERM NO.	TO	TERM NO.
1	BK	-	CAN:03:C2	EXISTS	MTJ03250:M12	EXISTS

LT SURF RECVR POS — J03300 — CABLE ASSEMBLY, M12
JUP INSTALL — 3401327 — RCV_BG

410	120	60
2	2	1

RUN	COLOR	WIRE #	FROM	TERM NO.	TO	TERM NO.
1	BK	-	CAN:03:C3	EXISTS	RJ03350:M12	EXISTS

LT CLAMP PRESS TRANS — J03400 — CABLE ASSEMBLY, M12
JUP INSTALL — 3401329 — WORKHEAD

410	120	80
2	2	1

RUN	COLOR	WIRE #	FROM	TERM NO.	TO	TERM NO.
1	BK	-	CAN:03:C4	EXISTS	MTJ03450:M12	EXISTS

RT CLAMP PRESS TRANS — J03500 — CABLE ASSEMBLY, M12
JUP INSTALL — 3401329 — WORKHEAD

410	120	80
2	2	1

RUN	COLOR	WIRE #	FROM	TERM NO.	TO	TERM NO.
1	BK	-	CAN:03:C5	EXISTS	MTJ03550:M12	EXISTS

INCLINOMETER — J03600 — CABLE ASSEMBLY, M12
JUP INSTALL — 3401326 — JUP INSTALL

410	120	50
2	2	1

RUN	COLOR	WIRE #	FROM	TERM NO.	TO	TERM NO.
1	BK	-	CAN:03:C6	EXISTS	PSJ03650:IN	EXISTS

BRAKE PRESSURE REAR — J03700 — CABLE ASSEMBLY, M12 (REF)
OPT BRAKE PRESS — 3401328 — OPT BRAKE PRESS

RUN	COLOR	WIRE #	FROM	TERM NO.	TO	TERM NO.
1	BK	J03700	CAN:03:C7	EXISTS	MTJ03750:M12	EXISTS

CAN:04

(H) REAR AXLE REV — J04100 — CABLE ASSEMBLY, M12
JUP INSTALL — 4022356 — REAR_AXL

410	120	290
2	2	1

RUN	COLOR	WIRE #	FROM	TERM NO.	TO	TERM NO.
1	BK	-	CAN:04:C1	EXISTS	LJ04142:DIN	EXISTS

(H) REAR AXLE FWD — J04200 — CABLE ASSEMBLY, M12
JUP INSTALL — 4022356 — REAR_AXL

410	120	290
2	2	1

RUN	COLOR	WIRE #	FROM	TERM NO.	TO	TERM NO.
1	BK	-	CAN:04:C2	EXISTS	LJ04242:DIN	EXISTS

LOW GEAR REAR TRANS — J04300 — CABLE ASSEMBLY, M12
JUP INSTALL — 4022369 — REAR_AXL

410	120	320
2	2	1

RUN	COLOR	WIRE #	FROM	TERM NO.	TO	TERM NO.
1	BK	-	CAN:04:C3	EXISTS	LJ04342:DIN	EXISTS

HIGH GEAR REAR TRANS — J04400 — CABLE ASSEMBLY, M12
JUP INSTALL — 4022369 — REAR_AXL

410	120	320
2	2	1

RUN	COLOR	WIRE #	FROM	TERM NO.	TO	TERM NO.
1	BK	-	CAN:04:C4	EXISTS	LJ04442:DIN	EXISTS

RR L SUSP LOCKOUT — J04500 — CABLE ASSEMBLY, M12
JUP INSTALL — 4022356

410	120	290
2	2	1

RUN	COLOR	WIRE #	FROM	TERM NO.	TO	TERM NO.
1	BK	-	CAN:04:C5	EXISTS	LJ04542:DIN	EXISTS

RR R SUSP LOCKOUT — J04600 — CABLE ASSEMBLY, M12
JUP INSTALL — 4022356

410	120	290
2	2	1

RUN	COLOR	WIRE #	FROM	TERM NO.	TO	TERM NO.
1	BK	-	CAN:04:C6	EXISTS	LJ04642:DIN	EXISTS

INDEX BRAKE — J04700 — CABLE ASSEMBLY, M12
JUP INSTALL — 4022370 — FRONT

410	120	330
2	2	1

RUN	COLOR	WIRE #	FROM	TERM NO.	TO	TERM NO.
1	BK	-	CAN:04:C7	EXISTS	LJ04742:DIN	EXISTS

WH LKUP RLS — J04800 — CABLE ASSEMBLY, M12
JUP INSTALL — 4022370 — FRONT

410	120	330
2	2	1

RUN	COLOR	WIRE #	FROM	TERM NO.	TO	TERM NO.
1	BK	-	CAN:04:C8	EXISTS	LJ04842:DIN	EXISTS

CONFIDENTIAL

©COPYRIGHT 2011 HARSCO. THIS DRAWING OR DOCUMENT IS THE PROPERTY OF HARSCO AND EMBODIES CONFIDENTIAL INFORMATION, TRADE SECRET INFORMATION, AND/OR KNOW-HOW THAT IS THE PROPERTY OF HARSCO. BY ACCEPTING THIS DRAWING OR DOCUMENT, THE RECIPIENT AGREES (1) NOT TO PROVIDE, OR OTHERWISE MAKE AVAILABLE, THE DRAWING OR DOCUMENT, OR ANY INFORMATION OR KNOW-HOW EMBODIED THEREIN, TO ANY THIRD PARTY AND (2) NOT TO REPRODUCE OR USE THE DRAWING OR DOCUMENT TO MANUFACTURE ANY APPARATUS OR DEVICE, WITHOUT THE PRIOR WRITTEN AUTHORIZATION OF HARSCO.

CHANGE #		REVISION	DR	DATE
EC501059	A	NEW RELEASE	CJW	05/11
EC501128	B	ADDED NEW VIEWS, UPDATED CABLES	CJW	05/11
EC501418	C	REMOVED SAFETY RELAYS, UPDATED AS BUILT	CJW	06/11
EC501821	D	UPDATE AS BUILT- CABLE PART NUMBERS	CJW	08/11
EC502003	E	SWAP J04400/J04800 AND J05600/J05700 ON SHT 7 UPDATE SHT 21	CJW	09-22-11
EC502615	F	UPDATE CABLE CHARTS FOR SAT RADIO ON P.18	CJW	01-05-12
EC502851	G	UPDATE CABLES AS BUILT, SEE EC FOR CHANGE DETAIL	CJW	02-08-12
EC503310	H	SEE EC FOR CHANGE DETAIL	CJW	04-09-12

DRAWING TITLE/DESCRIPTION:
JUPITER SYSTEM INSTALLATION
Cable Charts

MACHINE TYPE-MODEL:
MARK IV

E3 PROJECT FILE NAME:
MARK IV HD_10

SHEET NUMBER: 14
NUMBER OF JUPITER SHEETS: -
TOTAL NUMBER OF SHEETS: 23

DRAWN BY: CJW
REL. DATE: 05/11
SIZE: D
SCALE:

HARSCO RAIL

E3 DRAWING
5007956

CAN:05

RR GEARBOX SWITCHES — JUP INSTALL — J05300 3401326 — CABLE ASSEMBLY, M12 JUP INSTALL — 410/2 120/2 50/1

RUN	COLOR	WIRE #	FROM	TERM NO.	TO	TERM NO.
1	BK	-	CAN:05:C3	EXISTS	SPJ05350:IN	EXISTS

RR GEARBOX SWITCHES — JUP INSTALL — SPJ05350 2011783 — CONNECTOR, SPLITTER JUP INSTALL — 410/2 120/2 20/1

RUN	COLOR	WIRE #	FROM	TERM NO.	TO	TERM NO.
1	BK	J05300	SPJ05350:IN	EXISTS	J05300:FEM	EXISTS
2	BK	SJ05325	SPJ05350:A-1	EXISTS	SJ05325:M12	EXISTS
3	BK	SJ05375	SPJ05350:B-2	EXISTS	SJ05375:M12	EXISTS

RR GEARBOX SWITCHES — JUP INSTALL — J05400 3401326 — CABLE ASSEMBLY, M12 JUP INSTALL — 410/2 120/2 50/1

RUN	COLOR	WIRE #	FROM	TERM NO.	TO	TERM NO.
1	BK	-	CAN:05:C4	EXISTS	SPJ05450:IN	EXISTS

RR GEARBOX SWITCHES — JUP INSTALL — SPJ05450 2011783 — CONNECTOR, SPLITTER JUP INSTALL — 410/2 120/2 20/1

RUN	COLOR	WIRE #	FROM	TERM NO.	TO	TERM NO.
1	BK	J05400	SPJ05450:IN	EXISTS	J05400:FEM	EXISTS
2	BK	J05425	SPJ05450:A-1	EXISTS	J05425:MAL	EXISTS
3	BK	SJ05475	SPJ05450:B-2	EXISTS	SJ05475:M12	EXISTS

RR TRAN SPD SEN — JUP INSTALL — J05425 3401325 — CABLE ASSEMBLY, M12 REAR TRANS — 410/2 120/2 40/1

RUN	COLOR	WIRE #	FROM	TERM NO.	TO	TERM NO.
1	BK	-	SPJ05450:A-1	EXISTS	SJ05425:M12	EXISTS

AIR HORN VALVE — JUP INSTALL — J05500 4022353 — CABLE ASSEMBLY, M12 AIR TANK — 410/2 120/2 260/1

RUN	COLOR	WIRE #	FROM	TERM NO.	TO	TERM NO.
1	BK	-	CAN:05:C5	EXISTS	LJ05542:DIN	EXISTS

RECEIVER BIAS LEFT — JUP INSTALL — J05600 4022370 — CABLE ASSEMBLY, M12 RCV_BG — 410/2 120/2 330/1

RUN	COLOR	WIRE #	FROM	TERM NO.	TO	TERM NO.
1	BK	-	CAN:05:C6	EXISTS	LJ05642:DIN	EXISTS

RECEIVER BIAS RIGHT — JUP INSTALL — J05700 4022370 — CABLE ASSEMBLY, M12 RCV_BG — 410/2 120/2 330/1

RUN	COLOR	WIRE #	FROM	TERM NO.	TO	TERM NO.
1	BK	-	CAN:05:C7	EXISTS	LJ05742:DIN	EXISTS

RR TRAC MOTOR DISP — JUP INSTALL — J05800 4022348 — CABLE ASSEMBLY, M12 REAR TRANS — 410/2 120/2 240/1

RUN	COLOR	WIRE #	FROM	TERM NO.	TO	TERM NO.
1	BK	-	CAN:05:C8	EXISTS	LJ05842:DIN	EXISTS

CAN:06

RT SURF DB RECVR — SURF — J06217 4015775 — CABLE ASSEMBLY, M12 MCB — 410/2 120/2 110/1

RUN	COLOR	WIRE #	FROM	TERM NO.	TO	TERM NO.
1	W-1	3485	MODJ06217:M12	EXISTS	TB2:10	-
2	W-2	J06200	MODJ06217:M12	EXISTS	TB2:20	-
3	W-3	000	MODJ06217:M12	EXISTS	TB3:12	-
4	W-4	3485	MODJ06217:M12	EXISTS	TB2:10	-
5	W-5	000	MODJ06217:M12	EXISTS	TB3:12	-

LT SURF DB RECVR — SURF — J06309 3405078 — CABLE ASSEMBLY, M12 MCB — 410/2 120/2 530/1

RUN	COLOR	WIRE #	FROM	TERM NO.	TO	TERM NO.
1	W-1	3485	MODJ06309:M12	EXISTS	TB2:10	-
2	W-2	J06292	MODJ06309:M12	EXISTS	TB2:21	-
3	W-3	000	MODJ06309:M12	EXISTS	TB3:12	-
4	W-4	3485	MODJ06309:M12	EXISTS	TB2:10	-
5	W-5	000	MODJ06309:M12	EXISTS	TB3:12	-

RT LINER RECVR — LINER — J06400 3405078 — CABLE ASSEMBLY, M12 MCB — 410/2 120/2 530/1

RUN	COLOR	WIRE #	FROM	TERM NO.	TO	TERM NO.
1	W-1	3485	MODJ06400:M12	EXISTS	TB2:11	-
2	W-2	J06358	MODJ06400:M12	EXISTS	TB2:22	-
3	W-3	000	MODJ06400:M12	EXISTS	TB3:13	-
4	W-4	3485	MODJ06400:M12	EXISTS	TB2:11	-
5	W-5	000	MODJ06400:M12	EXISTS	TB3:13	-

LT LINER RECVR — LINER — J06492 4022334 — CABLE ASSEMBLY, M12 MCB — 410/2 120/2 220/1

RUN	COLOR	WIRE #	FROM	TERM NO.	TO	TERM NO.
1	W-1	3485	MODJ06492:M12	EXISTS	TB2:11	-
2	W-2	J06392	MODJ06492:M12	EXISTS	TB2:23	-
3	W-3	000	MODJ06492:M12	EXISTS	TB3:13	-
4	W-4	3485	MODJ06492:M12	EXISTS	TB2:11	-
5	W-5	000	MODJ06492:M12	EXISTS	TB3:13	-

RT SFC ACT MOTOR — LINER — J06575 4015775 — CABLE ASSEMBLY, M12 MCB — 410/2 120/2 110/1

RUN	COLOR	WIRE #	FROM	TERM NO.	TO	TERM NO.
1	W-1	J06560	BJ06592:ACT	EXISTS	MODJ06559:M1A	-
2	W-2	J06594	BJ06592:ACT	EXISTS	MODJ06559:M1B	-
3	W-3	**NC**	BJ06592:ACT	EXISTS	-	-
4	W-4	**NC**	BJ06592:ACT	EXISTS	-	-
5	W-5	**NC**	BJ06592:ACT	EXISTS	-	-

LT SFC ACT MOTOR — LINER — J06675 4022334 — CABLE ASSEMBLY, M12 MCB — 410/2 120/2 220/1

RUN	COLOR	WIRE #	FROM	TERM NO.	TO	TERM NO.
1	W-1	J06660	BJ06692:ACT	EXISTS	MODJ06559:M2A	-
2	W-2	J06692	BJ06692:ACT	EXISTS	MODJ06559:M2B	-
3	W-3	**NC**	BJ06692:ACT	EXISTS	-	-
4	W-4	**NC**	BJ06692:ACT	EXISTS	-	-
5	W-5	**NC**	BJ06692:ACT	EXISTS	-	-

RT LINER ACT MOTOR — JUP INSTALL — J06775 4015775 — CABLE ASSEMBLY, M12 MCB — 410/2 120/2 110/1

RUN	COLOR	WIRE #	FROM	TERM NO.	TO	TERM NO.
1	W-1	J06744	J06790:MAL	EXISTS	MODJ06742:M1A	-
2	W-2	J06775	J06790:MAL	EXISTS	MODJ06742:M1B	-
3	W-3	**NC**	J06790:MAL	EXISTS	-	-
4	W-4	**NC**	J06790:MAL	EXISTS	-	-
5	W-5	**NC**	J06790:MAL	EXISTS	-	-

RT LINER ACT MOTOR — JUP INSTALL — J06790 3401326 — CABLE ASSEMBLY, M12 LINER — 410/2 120/2 50/1

RUN	COLOR	WIRE #	FROM	TERM NO.	TO	TERM NO.
1	BK	-	J06775:M12	EXISTS	BJ06775:ACT	EXISTS

CAN:06 (CONT'D)

LT LINER ACT MOTOR — JUP INSTALL — J06875 4015775 — CABLE ASSEMBLY, M12 MCB — 410/2 120/2 110/1

RUN	COLOR	WIRE #	FROM	TERM NO.	TO	TERM NO.
1	W-1	J06844	J06890:MAL	EXISTS	MODJ06742:M2A	-
2	W-2	J06875	J06890:MAL	EXISTS	MODJ06742:M2B	-
3	W-3	**NC**	J06890:MAL	EXISTS	-	-
4	W-4	**NC**	J06890:MAL	EXISTS	-	-
5	W-5	**NC**	J06890:MAL	EXISTS	-	-

LT LINER ACT MOTOR — JUP INSTALL — J06890 3401326 — CABLE ASSEMBLY, M12 LINER — 410/2 120/2 50/1

RUN	COLOR	WIRE #	FROM	TERM NO.	TO	TERM NO.
1	BK	-	J06875:M12	EXISTS	BJ06875:ACT	EXISTS

CONFIDENTIAL

©COPYRIGHT 2011 HARSCO. THIS DRAWING OR DOCUMENT IS THE PROPERTY OF HARSCO AND EMBODIES CONFIDENTIAL INFORMATION, TRADE SECRET INFORMATION, AND/OR KNOW-HOW THAT IS THE PROPERTY OF HARSCO. BY ACCEPTING THIS DRAWING OR DOCUMENT, THE RECIPIENT AGREES (1) NOT TO PROVIDE, OR OTHERWISE MAKE AVAILABLE, THE DRAWING OR DOCUMENT, OR ANY INFORMATION OR KNOW-HOW EMBODIED THEREIN, TO ANY THIRD PARTY AND (2) NOT TO REPRODUCE OR USE THE DRAWING OR DOCUMENT TO MANUFACTURE ANY APPARATUS OR DEVICE, WITHOUT THE PRIOR WRITTEN AUTHORIZATION OF HARSCO.

CHANGE #		REVISION	DR	DATE
EC501059	A	NEW RELEASE	CJW	05/11
EC501128	B	ADDED NEW VIEWS, UPDATED CABLES	CJW	05/11
EC501418	C	REMOVED SAFETY RELAYS, UPDATED AS BUILT	CJW	06/11
EC501821	D	UPDATE AS BUILT- CABLE PART NUMBERS	CJW	08/11
EC502003	E	SWAP J04400/J04800 AND J05600/J05700 ON SHT 7 UPDATE SHT 21	CJW	09-22-11
EC502615	F	UPDATE CABLE CHARTS FOR SAT RADIO ON P.18	CJW	01-05-12
EC502851	G	UPDATE CABLES AS BUILT, SEE EC FOR CHANGE DETAIL	CJW	02-08-12
EC503310	H	SEE EC FOR CHANGE DETAIL	CJW	04-09-12

DRAWING TITLE/DESCRIPTION: JUPITER SYSTEM INSTALLATION Cable Charts

MACHINE TYPE-MODEL: MARK IV

E3 PROJECT FILE NAME: MARK IV HD_10

SHEET NUMBER: 15

NUMBER OF JUPITER SHEETS: -

TOTAL NUMBER OF SHEETS: 23

DRAWN BY: CJW

REL. DATE: 05/11

SIZE: D

SCALE:

HARSCO RAIL

E3 DRAWING

5007956

CAN:07

LF WH VLV 1 UPFD — J07100 — CABLE ASSEMBLY, M12
JUP INSTALL — 4022354 — WORKHEAD
410/2 120/2 270/1

RUN	COLOR	WIRE #	FROM	TERM NO.	TO	TERM NO.
1	BK	-	CAN:07:C1	EXISTS	LJ07142:DIN	EXISTS

LF WH VLV 1 DNFD — J07200 — CABLE ASSEMBLY, M12
JUP INSTALL — 4022354 — WORKHEAD
410/2 120/2 270/1

RUN	COLOR	WIRE #	FROM	TERM NO.	TO	TERM NO.
1	BK	-	CAN:07:C2	EXISTS	LJ07242:DIN	EXISTS

LF WH VLV 2 UPFD — J07300 — CABLE ASSEMBLY, M12
JUP INSTALL — 4022354 — WORKHEAD
410/2 120/2 270/1

RUN	COLOR	WIRE #	FROM	TERM NO.	TO	TERM NO.
1	BK	-	CAN:07:C3	EXISTS	LJ07342:DIN	EXISTS

LF WH VLV2 DNFD — J07400 — CABLE ASSEMBLY, M12
JUP INSTALL — 4022354 — WORKHEAD
410/2 120/2 270/1

RUN	COLOR	WIRE #	FROM	TERM NO.	TO	TERM NO.
1	BK	-	CAN:07:C4	EXISTS	LJ07442:DIN	EXISTS

RT WH VLV2 UPFD — J07500 — CABLE ASSEMBLY, M12
JUP INSTALL — 4022354 — WORKHEAD
410/2 120/2 270/1

RUN	COLOR	WIRE #	FROM	TERM NO.	TO	TERM NO.
1	BK	-	CAN:07:C5	EXISTS	LJ07542:DIN	EXISTS

RT WH VLV 2 DNFD — J07600 — CABLE ASSEMBLY, M12
JUP INSTALL — 4022354 — WORKHEAD
410/2 120/2 270/1

RUN	COLOR	WIRE #	FROM	TERM NO.	TO	TERM NO.
1	BK	-	CAN:07:C6	EXISTS	LJ07642:DIN	EXISTS

RT WH VLV 1 UPFD — J07700 — CABLE ASSEMBLY, M12
JUP INSTALL — 4022354 — WORKHEAD
410/2 120/2 270/1

RUN	COLOR	WIRE #	FROM	TERM NO.	TO	TERM NO.
1	BK	-	CAN:07:C7	EXISTS	LJ07742:DIN	EXISTS

RT WH VLV 1 DNFD — J07800 — CABLE ASSEMBLY, M12
JUP INSTALL — 4022354 — WORKHEAD
410/2 120/2 270/1

RUN	COLOR	WIRE #	FROM	TERM NO.	TO	TERM NO.
1	BK	-	CAN:07:C8	EXISTS	LJ07842:DIN	EXISTS

CAN:08

RT WH TRVS OUT — J08100 — CABLE ASSEMBLY, M12
JUP INSTALL — 4022354 — WORKHEAD
410/2 120/2 270/1

RUN	COLOR	WIRE #	FROM	TERM NO.	TO	TERM NO.
1	BK	-	CAN:08:C1	EXISTS	LJ08142:DIN	EXISTS

RT WH TRVS IN — J08200 — CABLE ASSEMBLY, M12
JUP INSTALL — 4022354 — WORKHEAD
410/2 120/2 270/1

RUN	COLOR	WIRE #	FROM	TERM NO.	TO	TERM NO.
1	BK	-	CAN:08:C2	EXISTS	LJ08242:DIN	EXISTS

LT WH TRVS OUT — J08300 — CABLE ASSEMBLY, M12
JUP INSTALL — 4022354 — WORKHEAD
410/2 120/2 270/1

RUN	COLOR	WIRE #	FROM	TERM NO.	TO	TERM NO.
1	BK	-	CAN:08:C3	EXISTS	LJ08342:DIN	EXISTS

LT WH TRVS IN — J08400 — CABLE ASSEMBLY, M12
JUP INSTALL — 4022354 — WORKHEAD
410/2 120/2 270/1

RUN	COLOR	WIRE #	FROM	TERM NO.	TO	TERM NO.
1	BK	-	CAN:08:C4	EXISTS	LJ08442:DIN	EXISTS

RT WH SQZ OUT — J08500 — CABLE ASSEMBLY, M12
JUP INSTALL — 4022354 — WORKHEAD
410/2 120/2 270/1

RUN	COLOR	WIRE #	FROM	TERM NO.	TO	TERM NO.
1	BK	-	CAN:08:C5	EXISTS	LJ08542:DIN	EXISTS

RT WH SQZ IN — J08600 — CABLE ASSEMBLY, M12
JUP INSTALL — 4022354 — WORKHEAD
410/2 120/2 270/1

RUN	COLOR	WIRE #	FROM	TERM NO.	TO	TERM NO.
1	BK	-	CAN:08:C6	EXISTS	LJ08642:DIN	EXISTS

LT WH SQZ OUT — J08700 — CABLE ASSEMBLY, M12
JUP INSTALL — 4022354 — WORKHEAD
410/2 120/2 270/1

RUN	COLOR	WIRE #	FROM	TERM NO.	TO	TERM NO.
1	BK	-	CAN:08:C7	EXISTS	LJ08742:DIN	EXISTS

LT WH SQZ IN — J08800 — CABLE ASSEMBLY, M12
JUP INSTALL — 4022354 — WORKHEAD
410/2 120/2 270/1

RUN	COLOR	WIRE #	FROM	TERM NO.	TO	TERM NO.
1	BK	-	CAN:08:C8	EXISTS	LJ08842:DIN	EXISTS

CAN:09

LIMIT SWITCHES — J09100 — CABLE ASSEMBLY, M12
JUP INSTALL — 3401327 — COMBO_CLAMP
410/2 120/2 60/1

RUN	COLOR	WIRE #	FROM	TERM NO.	TO	TERM NO.
1	BK	-	CAN:09:C1	EXISTS	SPJ09150:IN	EXISTS

LT CLAMP LIMIT SW — SPJ09150 — CONNECTOR, SPLITTER (REF)
JUP INSTALL — 414260 — JUP INSTALL

RUN	COLOR	WIRE #	FROM	TERM NO.	TO	TERM NO.
1	BK	J09100	SPJ09150:IN	EXISTS	J09100:FEM	EXISTS
2	BK	J09125	SPJ09150:A-1	EXISTS	J09125:MAL	EXISTS
3	BK	J09150	SPJ09150:B-2	EXISTS	J09150:MAL	EXISTS

LT UPPER LIMIT SWITCH — J09125 — CABLE ASSEMBLY, M12
COMBO_CLAMP — 3401324 — WORKHEAD
410/2 120/2 30/1

RUN	COLOR	WIRE #	FROM	TERM NO.	TO	TERM NO.
1	BK	-	SPJ09150:A-1	EXISTS	SJ09125:M12	EXISTS

LT LOWER LIMIT SWITCH — J09150 — CABLE ASSEMBLY, M12
COMBO_CLAMP — 3401324 — WORKHEAD
410/2 120/2 30/1

RUN	COLOR	WIRE #	FROM	TERM NO.	TO	TERM NO.
1	BK	-	SPJ09150:B-2	EXISTS	SJ09175:M12	EXISTS

LIMIT SWITCHES — J09200 — CABLE ASSEMBLY, M12
JUP INSTALL — 3401327 — COMBO_CLAMP
410/2 120/2 60/1

RUN	COLOR	WIRE #	FROM	TERM NO.	TO	TERM NO.
1	BK	-	CAN:09:C2	EXISTS	SPJ09250:IN	EXISTS

CLAMP OUTER LIMIT SW — SPJ09250 — CONNECTOR, SPLITTER (REF)
JUP INSTALL — 414260 — JUP INSTALL

RUN	COLOR	WIRE #	FROM	TERM NO.	TO	TERM NO.
1	BK	J09200	SPJ09250:IN	EXISTS	J09200:FEM	EXISTS
2	BK	J09225	SPJ09250:A-1	EXISTS	J09225:MAL	EXISTS
3	BK	J09250	SPJ09250:B-2	EXISTS	J09250:MAL	EXISTS

LT OUTER LIMIT SWITCH — J09225 — CABLE ASSEMBLY, M12
COMBO_CLAMP — 3401325 — WORKHEAD
410/2 120/2 40/1

RUN	COLOR	WIRE #	FROM	TERM NO.	TO	TERM NO.
1	BK	-	SPJ09250:A-1	EXISTS	SJ09225:M12	EXISTS

RT OUTER LIMIT SWITCH — J09250 — CABLE ASSEMBLY, M12
COMBO_CLAMP — 3401324 — WORKHEAD
410/2 120/2 30/1

RUN	COLOR	WIRE #	FROM	TERM NO.	TO	TERM NO.
1	BK	-	SPJ09250:B-2	EXISTS	SJ09275:M12	EXISTS

LIMIT SWITCHES — J09300 — CABLE ASSEMBLY, M12
JUP INSTALL — 3401327 — COMBO_CLAMP
410/2 120/2 60/1

RUN	COLOR	WIRE #	FROM	TERM NO.	TO	TERM NO.
1	BK	-	CAN:09:C3	EXISTS	SPJ09350:IN	EXISTS

RT CLAMP LIMIT SW — SPJ09350 — CONNECTOR, SPLITTER (REF)
JUP INSTALL — 414260 — JUP INSTALL

RUN	COLOR	WIRE #	FROM	TERM NO.	TO	TERM NO.
1	BK	J09300	SPJ09350:IN	EXISTS	J09300:FEM	EXISTS
2	BK	J09325	SPJ09350:A-1	EXISTS	J09325:MAL	EXISTS
3	BK	J09350	SPJ09350:B-2	EXISTS	J09350:MAL	EXISTS

RT UPPER LIMIT SWITCH — J09325 — CABLE ASSEMBLY, M12
COMBO_CLAMP — 3401324 — WORKHEAD
410/2 120/2 30/1

RUN	COLOR	WIRE #	FROM	TERM NO.	TO	TERM NO.
1	BK	-	SPJ09350:A-1	EXISTS	SJ09325:M12	EXISTS

RT LOWER LIMIT SWITCH — J09350 — CABLE ASSEMBLY, M12
COMBO_CLAMP — 3401324 — WORKHEAD
410/2 120/2 30/1

RUN	COLOR	WIRE #	FROM	TERM NO.	TO	TERM NO.
1	BK	-	SPJ09350:B-2	EXISTS	SJ09375:M12	EXISTS

CONFIDENTIAL

©COPYRIGHT 2011 HARSCO. THIS DRAWING OR DOCUMENT IS THE PROPERTY OF HARSCO AND EMBODIES CONFIDENTIAL INFORMATION, TRADE SECRET INFORMATION, AND/OR KNOW-HOW THAT IS THE PROPERTY OF HARSCO. BY ACCEPTING THIS DRAWING OR DOCUMENT, THE RECIPIENT AGREES (1) NOT TO PROVIDE, OR OTHERWISE MAKE AVAILABLE, THE DRAWING OR DOCUMENT, OR ANY INFORMATION OR KNOW-HOW EMBODIED THEREIN, TO ANY THIRD PARTY AND (2) NOT TO REPRODUCE OR USE THE DRAWING OR DOCUMENT TO MANUFACTURE ANY APPARATUS OR DEVICE, WITHOUT THE PRIOR WRITTEN AUTHORIZATION OF HARSCO.

CHANGE #		REVISION	DR	DATE
EC501059	A	NEW RELEASE	CJW	05/11
EC501128	B	ADDED NEW VIEWS, UPDATED CABLES	CJW	05/11
EC501418	C	REMOVED SAFETY RELAYS, UPDATED AS BUILT	CJW	06/11
EC501821	D	UPDATE AS BUILT- CABLE PART NUMBERS	CJW	08/11
EC502003	E	SWAP J04400/J04800 AND J05600/J05700 ON SHT 7 UPDATE SHT 21	CJW	09-22-11
EC502615	F	UPDATE CABLE CHARTS FOR SAT RADIO ON P.18	CJW	01-05-12
EC502851	G	UPDATE CABLES AS BUILT, SEE EC FOR CHANGE DETAIL	CJW	02-08-12
EC503310	H	SEE EC FOR CHANGE DETAIL	CJW	04-09-12

DRAWING TITLE/DESCRIPTION:
JUPITER SYSTEM INSTALLATION
Cable Charts

MACHINE TYPE-MODEL:
MARK IV

E3 PROJECT FILE NAME:
MARK IV HD_10

SHEET NUMBER: 16
NUMBER OF JUPITER SHEETS: -
TOTAL NUMBER OF SHEETS: 23

DRAWN BY: CJW
REL. DATE: 05/11
SIZE: D
SCALE:

HARSCO RAIL

E3 DRAWING
5007956

CAN:10

WARM UP RT — J10100 — CABLE ASSEMBLY, M12
JUP INSTALL — 4022355 — NEAR FUEL TANK
410/2 120/2 280/1

RUN	COLOR	WIRE #	FROM	TERM NO.	TO	TERM NO.
1	BK	-	CAN:10:C1	EXISTS	LJ10142:DIN	EXISTS

WARM UP LF — J10200 — CABLE ASSEMBLY, M12
JUP INSTALL — 4022356 — NEAR FUEL TANK
410/2 120/2 290/1

RUN	COLOR	WIRE #	FROM	TERM NO.	TO	TERM NO.
1	BK	-	CAN:10:C2	EXISTS	LJ10242:DIN	EXISTS

SDWBD BIAS LEFT — J10300 — CABLE ASSEMBLY, M12
JUP INSTALL — 4022369 — RS_FRAME
410/2 120/2 320/1

RUN	COLOR	WIRE #	FROM	TERM NO.	TO	TERM NO.
1	BK	-	CAN:10:C3	EXISTS	LJ10342:DIN	EXISTS

SDWBD BIAS RIGHT — J10400 — CABLE ASSEMBLY, M12
JUP INSTALL — 4022369 — RS_FRAME
410/2 120/2 320/1

RUN	COLOR	WIRE #	FROM	TERM NO.	TO	TERM NO.
1	BK	-	CAN:10:C4	EXISTS	LJ10442:DIN	EXISTS

CLAMP FRAME LOCK — J10500 — CABLE ASSEMBLY, M12
JUP INSTALL — 4022369 — RS_FRAME
410/2 120/2 320/1

RUN	COLOR	WIRE #	FROM	TERM NO.	TO	TERM NO.
1	BK	-	CAN:10:C5	EXISTS	LJ10542:DIN	EXISTS

HYD FAN CTRL VALVE — J10600 — CABLE ASSEMBLY, M12
JUP INSTALL — 4022356 — HYD TANK
410/2 120/2 290/1

RUN	COLOR	WIRE #	FROM	TERM NO.	TO	TERM NO.
1	BK	-	CAN:10:C6	EXISTS	LJ10642:DIN	EXISTS

TIE MARKER — J10700 — CABLE ASSEMBLY, M12 (REF)
OPT TIE MARKER — 4022348 — NEAR FUEL TANK

RUN	COLOR	WIRE #	FROM	TERM NO.	TO	TERM NO.
1	BK	J10700	CAN:10:C7	EXISTS	LJ10742:DIN	EXISTS

CAN:11

RIGHT HOOK IN — J11100 — CABLE ASSEMBLY, M12
JUP INSTALL — 4022353 — NEAR FUEL TANK
410/2 120/2 260/1

RUN	COLOR	WIRE #	FROM	TERM NO.	TO	TERM NO.
1	BK	-	CAN:11:C1	EXISTS	LJ11142:DIN	EXISTS

RIGHT HOOK OUT — J11200 — CABLE ASSEMBLY, M12
JUP INSTALL — 4022353 — NEAR FUEL TANK
410/2 120/2 260/1

RUN	COLOR	WIRE #	FROM	TERM NO.	TO	TERM NO.
1	BK	-	CAN:11:C2	EXISTS	LJ11242:DIN	EXISTS

RT HOOK REGEN IN — J11300 — CABLE ASSEMBLY, M12
JUP INSTALL — 4022353 — NEAR FUEL TANK
410/2 120/2 260/1

RUN	COLOR	WIRE #	FROM	TERM NO.	TO	TERM NO.
1	BK	-	CAN:11:C3	EXISTS	LJ11342:DIN	EXISTS

RT HOOK REGEN OUT — J11400 — CABLE ASSEMBLY, M12
JUP INSTALL — 4022353 — NEAR FUEL TANK
410/2 120/2 260/1

RUN	COLOR	WIRE #	FROM	TERM NO.	TO	TERM NO.
1	BK	-	CAN:11:C4	EXISTS	LJ11442:DIN	EXISTS

RT HAND SLEW REV — J11500 — CABLE ASSEMBLY, M12
JUP INSTALL — 4022353 — NEAR FUEL TANK
410/2 120/2 260/1

RUN	COLOR	WIRE #	FROM	TERM NO.	TO	TERM NO.
1	BK	-	CAN:11:C5	EXISTS	LJ11542:DIN	EXISTS

RT HAND SLEW FWD — J11600 — CABLE ASSEMBLY, M12
JUP INSTALL — 4022353 — NEAR FUEL TANK
410/2 120/2 260/1

RUN	COLOR	WIRE #	FROM	TERM NO.	TO	TERM NO.
1	BK	-	CAN:11:C6	EXISTS	LJ11642:DIN	EXISTS

CLAMP BIAS — J11700 — CABLE ASSEMBLY, M12
JUP INSTALL — 4022353 — NEAR FUEL TANK
410/2 120/2 260/1

RUN	COLOR	WIRE #	FROM	TERM NO.	TO	TERM NO.
1	BK	-	CAN:11:C7	EXISTS	LJ11742:DIN	EXISTS

PUMP CTRL VALVE — J11800 — CABLE ASSEMBLY, M12
JUP INSTALL — 4022349 — HYD SYSTEM
410/2 120/2 250/1

RUN	COLOR	WIRE #	FROM	TERM NO.	TO	TERM NO.
1	BK	-	CAN:11:C8	EXISTS	LJ11842:DIN	EXISTS

CONFIDENTIAL

©COPYRIGHT 2011 HARSCO. THIS DRAWING OR DOCUMENT IS THE PROPERTY OF HARSCO AND EMBODIES CONFIDENTIAL INFORMATION, TRADE SECRET INFORMATION, AND/OR KNOW-HOW THAT IS THE PROPERTY OF HARSCO. BY ACCEPTING THIS DRAWING OR DOCUMENT, THE RECIPIENT AGREES (1) NOT TO PROVIDE, OR OTHERWISE MAKE AVAILABLE, THE DRAWING OR DOCUMENT, OR ANY INFORMATION OR KNOW-HOW EMBODIED THEREIN, TO ANY THIRD PARTY AND (2) NOT TO REPRODUCE OR USE THE DRAWING OR DOCUMENT TO MANUFACTURE ANY APPARATUS OR DEVICE, WITHOUT THE PRIOR WRITTEN AUTHORIZATION OF HARSCO.

CHANGE #		REVISION	DR	DATE
EC501059	A	NEW RELEASE	CJW	05/11
EC501128	B	ADDED NEW VIEWS, UPDATED CABLES	CJW	05/11
EC501418	C	REMOVED SAFETY RELAYS, UPDATED AS BUILT	CJW	06/11
EC501821	D	UPDATE AS BUILT- CABLE PART NUMBERS	CJW	08/11
EC502003	E	SWAP J04400/J04800 AND J05600/J05700 ON SHT 7 UPDATE SHT 21	CJW	09-22-11
EC502615	F	UPDATE CABLE CHARTS FOR SAT RADIO ON P.18	CJW	01-05-12
EC502851	G	UPDATE CABLES AS BUILT, SEE EC FOR CHANGE DETAIL	CJW	02-08-12
EC503310	H	SEE EC FOR CHANGE DETAIL	CJW	04-09-12

DRAWING TITLE/DESCRIPTION:
JUPITER SYSTEM INSTALLATION
Cable Charts

MACHINE TYPE-MODEL:
MARK IV

E3 PROJECT FILE NAME:
MARK IV HD_10

SHEET NUMBER: 17
NUMBER OF JUPITER SHEETS: -
TOTAL NUMBER OF SHEETS: 23

DRAWN BY: CJW
REL. DATE: 05/11
SIZE: D
SCALE:

HARSCO RAIL

E3 DRAWING
5007956

CAN:12

RT HAND JACK UP — JUP INSTALL — J12100 4022353 — CABLE ASSEMBLY, M12 NEAR FUEL TANK — 410/2 120/2 260/1

RUN	COLOR	WIRE #	FROM	TERM NO.	TO	TERM NO.
1	BK	-	CAN:12:C1	EXISTS	LJ12142:DIN	EXISTS

RT HAND JACK DOWN — JUP INSTALL — J12200 4022353 — CABLE ASSEMBLY, M12 NEAR FUEL TANK — 410/2 120/2 260/1

RUN	COLOR	WIRE #	FROM	TERM NO.	TO	TERM NO.
1	BK	-	CAN:12:C2	EXISTS	LJ12242:DIN	EXISTS

LT HAND JACK UP — JUP INSTALL — J12300 4022353 — CABLE ASSEMBLY, M12 NEAR FUEL TANK — 410/2 120/2 260/1

RUN	COLOR	WIRE #	FROM	TERM NO.	TO	TERM NO.
1	BK	-	CAN:12:C3	EXISTS	LJ12342:DIN	EXISTS

LT HAND JACK DOWN — JUP INSTALL — J12400 4022353 — CABLE ASSEMBLY, M12 NEAR FUEL TANK — 410/2 120/2 260/1

RUN	COLOR	WIRE #	FROM	TERM NO.	TO	TERM NO.
1	BK	-	CAN:12:C4	EXISTS	LJ12442:DIN	EXISTS

RIGHT VIBRATOR — JUP INSTALL — J12500 4022353 — CABLE ASSEMBLY, M12 NEAR FUEL TANK — 410/2 120/2 260/1

RUN	COLOR	WIRE #	FROM	TERM NO.	TO	TERM NO.
1	BK	-	CAN:12:C5	EXISTS	LJ12542:DIN	EXISTS

LEFT VIBRATOR — JUP INSTALL — J12600 4022353 — CABLE ASSEMBLY, M12 NEAR FUEL TANK — 410/2 120/2 260/1

RUN	COLOR	WIRE #	FROM	TERM NO.	TO	TERM NO.
1	BK	-	CAN:12:C6	EXISTS	LJ12642:DIN	EXISTS

LINER FLOAT — JUP INSTALL — J12700 4022354 — CABLE ASSEMBLY, M12 NEAR FUEL TANK — 410/2 120/2 270/1

RUN	COLOR	WIRE #	FROM	TERM NO.	TO	TERM NO.
1	BK	-	CAN:12:C7	EXISTS	LJ12742:DIN	EXISTS

DECEL VALVE — JUP INSTALL — J12800 4022348 — CABLE ASSEMBLY, M12 WORKHEAD — 410/2 120/2 240/1

RUN	COLOR	WIRE #	FROM	TERM NO.	TO	TERM NO.
1	BK	-	CAN:12:C8	EXISTS	LJ12842:DIN	EXISTS

CAN:13

LINE LEFT — JUP INSTALL — J13100 4022353 — CABLE ASSEMBLY, M12 NEAR FUEL TANK — 410/2 120/2 260/1

RUN	COLOR	WIRE #	FROM	TERM NO.	TO	TERM NO.
1	BK	-	CAN:13:C1	EXISTS	LJ13142:DIN	EXISTS

LINE RIGHT — JUP INSTALL — J13200 4022353 — CABLE ASSEMBLY, M12 NEAR FUEL TANK — 410/2 120/2 260/1

RUN	COLOR	WIRE #	FROM	TERM NO.	TO	TERM NO.
1	BK	-	CAN:13:C2	EXISTS	LJ13242:DIN	EXISTS

LEFT HOOK IN — JUP INSTALL — J13300 4022353 — CABLE ASSEMBLY, M12 NEAR FUEL TANK — 410/2 120/2 260/1

RUN	COLOR	WIRE #	FROM	TERM NO.	TO	TERM NO.
1	BK	-	CAN:13:C3	EXISTS	LJ13342:DIN	EXISTS

LEFT HOOK OUT — JUP INSTALL — J13400 4022353 — CABLE ASSEMBLY, M12 NEAR FUEL TANK — 410/2 120/2 260/1

RUN	COLOR	WIRE #	FROM	TERM NO.	TO	TERM NO.
1	BK	-	CAN:13:C4	EXISTS	LJ13442:DIN	EXISTS

LT HOOK REGEN IN — JUP INSTALL — J13500 4022353 — CABLE ASSEMBLY, M12 NEAR FUEL TANK — 410/2 120/2 260/1

RUN	COLOR	WIRE #	FROM	TERM NO.	TO	TERM NO.
1	BK	-	CAN:13:C5	EXISTS	LJ13542:DIN	EXISTS

LT HOOK REGEN OUT — JUP INSTALL — J13600 4022353 — CABLE ASSEMBLY, M12 NEAR FUEL TANK — 410/2 120/2 260/1

RUN	COLOR	WIRE #	FROM	TERM NO.	TO	TERM NO.
1	BK	-	CAN:13:C6	EXISTS	LJ13642:DIN	EXISTS

LT HAND SLEW REV — JUP INSTALL — J13700 4022353 — CABLE ASSEMBLY, M12 NEAR FUEL TANK — 410/2 120/2 260/1

RUN	COLOR	WIRE #	FROM	TERM NO.	TO	TERM NO.
1	BK	-	CAN:13:C7	EXISTS	LJ13742:DIN	EXISTS

LT HAND SLEW FWD — JUP INSTALL — J13800 4022353 — CABLE ASSEMBLY, M12 NEAR FUEL TANK — 410/2 120/2 260/1

RUN	COLOR	WIRE #	FROM	TERM NO.	TO	TERM NO.
1	BK	-	CAN:13:C8	EXISTS	LJ13842:DIN	EXISTS

SATELLITE RADIO — OPT SAT RADIO — RADIO_J1939 4022330 — CABLE ASSEMBLY, M12 OPT SAT RADIO — (REF)

RUN	COLOR	WIRE #	FROM	TERM NO.	TO	TERM NO.
1	PK	**NC**	SPJ14850:A-1	EXISTS	-	-
2	RD	**NC**	SPJ14850:A-1	EXISTS	-	-
3	BU	**NC**	SPJ14850:A-1	EXISTS	-	-
4	WH	CAN HI	SPJ14850:A-1	EXISTS	AR6160:WH/YE-11	-
5	BN	CAN LO	SPJ14850:A-1	EXISTS	AR6160:WH/BU-12	-
6	SH	**NC**	SPJ14850:A-1	EXISTS	-	-

CAN:14

R/H LINER ACT POS — JUP INSTALL — J14100 3401327 — CABLE ASSEMBLY, M12 JUP INSTALL — 410/2 120/2 60/1

RUN	COLOR	WIRE #	FROM	TERM NO.	TO	TERM NO.
1	BK	-	CAN:14:C1	EXISTS	J14100A:MAL	EXISTS

R/H LINER ACT POS — JUP INSTALL — J14100A 3401336 — CABLE ASSEMBLY, M12 LINER — 410/2 120/2 90/1

RUN	COLOR	WIRE #	FROM	TERM NO.	TO	TERM NO.
1	BK	-	J14100:FEM	EXISTS	RJ14150:M12	EXISTS

L/H LINER ACT POS — JUP INSTALL — J14200 3401326 — CABLE ASSEMBLY, M12 JUP INSTALL — 410/2 120/2 50/1

RUN	COLOR	WIRE #	FROM	TERM NO.	TO	TERM NO.
1	BK	-	CAN:14:C2	EXISTS	J14200A:MAL	EXISTS

L/H LINER ACT POS — JUP INSTALL — J14200A 3401336 — CABLE ASSEMBLY, M12 LINER — 410/2 120/2 90/1

RUN	COLOR	WIRE #	FROM	TERM NO.	TO	TERM NO.
1	BK	-	J14200:FEM	EXISTS	RJ14250:M12	EXISTS

RT WORKHEAD STRING POT — JUP INSTALL — J14300 3401328 — CABLE ASSEMBLY, M12 JUP INSTALL — 410/2 120/2 70/1

RUN	COLOR	WIRE #	FROM	TERM NO.	TO	TERM NO.
1	BK	-	CAN:14:C3	EXISTS	J14300A:MAL	EXISTS

RT WORKHEAD STRING POT — JUP INSTALL — J14300A 3401336 — CABLE ASSEMBLY, M12 WORKHEAD — 410/2 120/2 90/1

RUN	COLOR	WIRE #	FROM	TERM NO.	TO	TERM NO.
1	BK	-	J14300:FEM	EXISTS	RJ14350:M12	EXISTS

LT WORKHEAD STRING POT — JUP INSTALL — J14400 3401327 — CABLE ASSEMBLY, M12 JUP INSTALL — 410/2 120/2 60/1

RUN	COLOR	WIRE #	FROM	TERM NO.	TO	TERM NO.
1	BK	-	CAN:14:C4	EXISTS	J14400A:MAL	EXISTS

LT WORKHEAD STRING POT — JUP INSTALL — J14400A 3401336 — CABLE ASSEMBLY, M12 WORKHEAD — 410/2 120/2 90/1

RUN	COLOR	WIRE #	FROM	TERM NO.	TO	TERM NO.
1	BK	-	J14400:FEM	EXISTS	RJ14450:M12	EXISTS

FUEL LEVEL TRANS — JUP INSTALL — J14500 3401325 — CABLE ASSEMBLY, M12 FUEL TANK — 410/2 120/2 40/1

RUN	COLOR	WIRE #	FROM	TERM NO.	TO	TERM NO.
1	BK	-	CAN:14:C5	EXISTS	MODJ14550:M12	EXISTS

P1 PUMP PRESSURE — JUP INSTALL — J14600 3401328 — CABLE ASSEMBLY, M12 HYD SYSTEM — 410/2 120/2 70/1

RUN	COLOR	WIRE #	FROM	TERM NO.	TO	TERM NO.
1	BK	-	CAN:14:C6	EXISTS	MTJ14650:M12	EXISTS

P2 PUMP PRESSURE — JUP INSTALL — J14700 3401328 — CABLE ASSEMBLY, M12 HYD SYSTEM — 410/2 120/2 70/1

RUN	COLOR	WIRE #	FROM	TERM NO.	TO	TERM NO.
1	BK	-	CAN:14:C7	EXISTS	MTJ14750:M12	EXISTS

HYDRAULIC TEMP SNDR — JUP INSTALL — J14800 3401329 — CABLE ASSEMBLY, M12 HYD TANK — 410/2 120/2 80/1

RUN	COLOR	WIRE #	FROM	TERM NO.	TO	TERM NO.
1	BK	-	CAN:14:C8	EXISTS	SJ14867:M12	EXISTS

ENG_J1939 CAN — OPT SAT RADIO — SPJ14850 2014920 — CONNECTOR, SPLITTER OPT SAT RADIO — (REF)

RUN	COLOR	WIRE #	FROM	TERM NO.	TO	TERM NO.
1	BK	-	SPJ14850:IN	EXISTS	CAN:14:CAN2	EXISTS
2	BK	-	SPJ14850:A-1	EXISTS	RADIO_J1939:C-OUT	EXISTS
3	BK	-	SPJ14850:B-2	EXISTS	ENG_J1939:C-OUT	EXISTS

(CAN:14 CONT'D ON NEXT SHEET)

CONFIDENTIAL

©COPYRIGHT 2011 HARSCO. THIS DRAWING OR DOCUMENT IS THE PROPERTY OF HARSCO AND EMBODIES CONFIDENTIAL INFORMATION, TRADE SECRET INFORMATION, AND/OR KNOW-HOW THAT IS THE PROPERTY OF HARSCO. BY ACCEPTING THIS DRAWING OR DOCUMENT, THE RECIPIENT AGREES (1) NOT TO PROVIDE, OR OTHERWISE MAKE AVAILABLE, THE DRAWING OR DOCUMENT, OR ANY INFORMATION OR KNOW-HOW EMBODIED THEREIN, TO ANY THIRD PARTY AND (2) NOT TO REPRODUCE OR USE THE DRAWING OR DOCUMENT TO MANUFACTURE ANY APPARATUS OR DEVICE, WITHOUT THE PRIOR WRITTEN AUTHORIZATION OF HARSCO.

CHANGE #		REVISION	DR	DATE
EC501059	A	NEW RELEASE	CJW	05/11
EC501128	B	ADDED NEW VIEWS, UPDATED CABLES	CJW	05/11
EC501418	C	REMOVED SAFETY RELAYS, UPDATED AS BUILT	CJW	06/11
EC501821	D	UPDATE AS BUILT- CABLE PART NUMBERS	CJW	08/11
EC502003	E	SWAP J04400/J04800 AND J05600/J05700 ON SHT 7 UPDATE SHT 21	CJW	09-22-11
EC502615	F	UPDATE CABLE CHARTS FOR SAT RADIO ON P.18	CJW	01-05-12
EC502851	G	UPDATE CABLES AS BUILT, SEE EC FOR CHANGE DETAIL	CJW	02-08-12
EC503310	H	SEE EC FOR CHANGE DETAIL	CJW	04-09-12

DRAWING TITLE/DESCRIPTION: JUPITER SYSTEM INSTALLATION
Cable Charts

MACHINE TYPE-MODEL: MARK IV

E3 PROJECT FILE NAME: MARK IV HD_10

SHEET NUMBER: 18
NUMBER OF JUPITER SHEETS: -
TOTAL NUMBER OF SHEETS: 23

DRAWN BY: CJW
REL. DATE: 05/11
SIZE: D
SCALE:

HARSCO RAIL

E3 DRAWING

5007956

CAN:14 (CONT'D)

ENGINE J1939 COM — ENG_J1939 — CABLE ASSEMBLY, M12
OPT SAT RADIO — 4022331 — JUP INSTALL
410 / 2 — 120 / 2 — 210 / 1

RUN	COLOR	WIRE #	FROM	TERM NO.	TO	TERM NO.
1	PU	-	SPJ14850:B-2	EXISTS	ENG_J1939_2:CAN2	EXISTS

(CONNECT TO CAN:14:CAN2
IF NO SATELLITE RADIO)

ENGINE J1939 COM (2) — ENG_J1939_2 — CABLE ASSEMBLY, J1939
JUP INSTALL — 5000347 — ENGINE
410 / 2 — 120 / 2 — 460 / 1

RUN	COLOR	WIRE #	FROM	TERM NO.	TO	TERM NO.
1	BK	-	ENG_J1939:C-IN	EXISTS	ENG_J1939_CON	EXISTS

CAN:15

FRONT AXLE FWD — J15100 — CABLE ASSEMBLY, M12
JUP INSTALL — 4022354 — FRONT AXLE
410 / 2 — 120 / 2 — 270 / 1

RUN	COLOR	WIRE #	FROM	TERM NO.	TO	TERM NO.
1	BK	-	CAN:15:C1	EXISTS	LJ15142:DIN	EXISTS

FRONT AXLE REV — J15200 — CABLE ASSEMBLY, M12
JUP INSTALL — 4022354 — FRONT AXLE
410 / 2 — 120 / 2 — 270 / 1

RUN	COLOR	WIRE #	FROM	TERM NO.	TO	TERM NO.
1	BK	-	CAN:15:C2	EXISTS	LJ15242:DIN	EXISTS

FR TRANS - LOW GEAR — J15300 — CABLE ASSEMBLY, M12
JUP INSTALL — 4022370 — FRONT AXLE
410 / 2 — 120 / 2 — 330 / 1

RUN	COLOR	WIRE #	FROM	TERM NO.	TO	TERM NO.
1	BK	-	CAN:15:C3	EXISTS	LJ15342:DIN	EXISTS

FR TRANS - HIGH GEAR — J15400 — CABLE ASSEMBLY, M12
JUP INSTALL — 4022370 — FRONT AXLE
410 / 2 — 120 / 2 — 330 / 1

RUN	COLOR	WIRE #	FROM	TERM NO.	TO	TERM NO.
1	BK	-	CAN:15:C4	EXISTS	LJ15442:DIN	EXISTS

FR R SUSP LOCKOUT — J15500 — CABLE ASSEMBLY, M12
JUP INSTALL — 4022355 — FRONT
410 / 2 — 120 / 2 — 280 / 1

RUN	COLOR	WIRE #	FROM	TERM NO.	TO	TERM NO.
1	BK	-	CAN:15:C5	EXISTS	LJ15542:DIN	EXISTS

FR L SUSP LOCKOUT — J15600 — CABLE ASSEMBLY, M12
JUP INSTALL — 4022355 — FRONT
410 / 2 — 120 / 2 — 280 / 1

RUN	COLOR	WIRE #	FROM	TERM NO.	TO	TERM NO.
1	BK	-	CAN:15:C6	EXISTS	LJ15642:DIN	EXISTS

DISTANCE ENCODER — J15700 — CABLE ASSEMBLY, M12
JUP INSTALL — 3401327 — FRONT AXLE
410 / 2 — 120 / 2 — 60 / 1

RUN	COLOR	WIRE #	FROM	TERM NO.	TO	TERM NO.
1	BK	-	CAN:15:C7	EXISTS	EJ15750:M12	EXISTS

ENCODER DOWN — J15800 — CABLE ASSEMBLY, M12
JUP INSTALL — 4022370 — FRONT
410 / 2 — 120 / 2 — 330 / 1

RUN	COLOR	WIRE #	FROM	TERM NO.	TO	TERM NO.
1	BK	-	CAN:15:C8	EXISTS	LJ15842:DIN	EXISTS

CAN:16

MANUAL PUMP SWITCH — J16100 — CABLE ASSEMBLY, M12
JUP INSTALL — 3401327 — I/C
410 / 2 — 120 / 2 — 60 / 1

RUN	COLOR	WIRE #	FROM	TERM NO.	TO	TERM NO.
1	BK	-	CAN:16:C1	EXISTS	SJ16150:M12	EXISTS

FR TRAC MOTOR DISP — J16200 — CABLE ASSEMBLY, M12
JUP INSTALL — 4022348 — FRONT TRANS
410 / 2 — 120 / 2 — 240 / 1

RUN	COLOR	WIRE #	FROM	TERM NO.	TO	TERM NO.
1	BK	-	CAN:16:C2	EXISTS	LJ16242:DIN	EXISTS

FRONT MOTION ALARM — J16300 — CABLE ASSEMBLY, M12
JUP INSTALL — 3401330 — JUP INSTALL
410 / 2 — 120 / 2 — 550 / 1

RUN	COLOR	WIRE #	FROM	TERM NO.	TO	TERM NO.
1	WH-1	J02A259	CAN:16:C3	EXISTS	LSJ16350:+	-
2	WH-2	**NC**	CAN:16:C3	EXISTS	-	-
3	WH-3	J02A261	CAN:16:C3	EXISTS	LSJ16350:-	-
4	WH-4	**NC**	CAN:16:C3	EXISTS	-	-
5	WH-5	**NC**	CAN:16:C3	EXISTS	-	-

FR GEARBOX SWITCHES — J16500 — CABLE ASSEMBLY, M12
JUP INSTALL — 3401326 — JUP INSTALL
410 / 2 — 120 / 2 — 50 / 1

RUN	COLOR	WIRE #	FROM	TERM NO.	TO	TERM NO.
1	BK	-	CAN:16:C5	EXISTS	SPJ16550:IN	EXISTS

FR GEARBOX SWITCHES — SPJ16550 — CONNECTOR, SPLITTER
JUP INSTALL — 2011783 — JUP INSTALL
410 / 2 — 120 / 2 — 20 / 1

RUN	COLOR	WIRE #	FROM	TERM NO.	TO	TERM NO.
1	BK	J16500	SPJ16550:IN	EXISTS	J16500:FEM	EXISTS
2	BK	SJ16525	SPJ16550:A-1	EXISTS	SJ16525:M12	EXISTS
3	BK	SJ16575	SPJ16550:B-2	EXISTS	SJ16575:M12	EXISTS

FR GEARBOX SWITCHES — J16600 — CABLE ASSEMBLY, M12
JUP INSTALL — 3401326 — JUP INSTALL
410 / 2 — 120 / 2 — 50 / 1

RUN	COLOR	WIRE #	FROM	TERM NO.	TO	TERM NO.
1	BK	-	CAN:16:C6	EXISTS	SPJ16650:IN	EXISTS

FR GEARBOX SWITCHES — SPJ16650 — CONNECTOR, SPLITTER
JUP INSTALL — 2011783 — JUP INSTALL
410 / 2 — 95 / 1 — 20 / 1

RUN	COLOR	WIRE #	FROM	TERM NO.	TO	TERM NO.
1	BK	J16600	SPJ16650:IN	EXISTS	J16600:FEM	EXISTS
2	BK	J16625	SPJ16650:A-1	EXISTS	J16625:MAL	EXISTS
3	BK	SJ16675	SPJ16650:B-2	EXISTS	SJ16675:M12	EXISTS

FR TRANS SPD SENSOR — J16625 — CABLE ASSEMBLY, M12
JUP INSTALL — 3401325 — FRONT TRANS
410 / 2 — 120 / 2 — 40 / 1

RUN	COLOR	WIRE #	FROM	TERM NO.	TO	TERM NO.
1	BK	-	SPJ16650:A-1	EXISTS	SJ16625:M12	EXISTS

AUTOMAG POWER L — J16700 — CABLE ASSEMBLY, M12 (REF)
OPT TIE FINDER — 3401327 — OPT TIE FINDER

RUN	COLOR	WIRE #	FROM	TERM NO.	TO	TERM NO.
1	BK	J16700	CAN:16:C7	EXISTS	MODJ17350:POWER	EXISTS

AUTOMAG POWER R — J16800 — CABLE ASSEMBLY, M12 (REF)
OPT TIE FINDER — 3401327 — OPT TIE FINDER

RUN	COLOR	WIRE #	FROM	TERM NO.	TO	TERM NO.
1	BK	J16800	CAN:16:C8	EXISTS	MODJ17450:POWER	EXISTS

CAN:17

AIR PRESS TRANS — J17100 — CABLE ASSEMBLY, M12
JUP INSTALL — 3401326 — AIR TANK
410 / 2 — 120 / 2 — 50 / 1

RUN	COLOR	WIRE #	FROM	TERM NO.	TO	TERM NO.
1	BK	-	CAN:17:C1	EXISTS	MTJ17150:M12	EXISTS

BRAKE CYL PRESS FRNT — J17200 — CABLE ASSEMBLY, M12 (REF)
OPT BRAKE PRESS — 3401327 — OPT BRAKE PRESS

RUN	COLOR	WIRE #	FROM	TERM NO.	TO	TERM NO.
1	BK	J17200	CAN:17:C2	EXISTS	MTJ17250:M12	EXISTS

AUTOMAG SIGNAL L — J17300 — CABLE ASSEMBLY, M12 (REF)
OPT TIE FINDER — 3401327 — OPT TIE FINDER

RUN	COLOR	WIRE #	FROM	TERM NO.	TO	TERM NO.
1	BK	J17300	CAN:17:C3	EXISTS	MODJ17350:SIGNAL	EXISTS

AUTOMAG SIGNAL R — J17400 — CABLE ASSEMBLY, M12 (REF)
OPT TIE FINDER — 3401327 — OPT TIE FINDER

RUN	COLOR	WIRE #	FROM	TERM NO.	TO	TERM NO.
1	BK	J17400	CAN:17:C4	EXISTS	MODJ17450:SIGNAL	EXISTS

TIE FINDER SYNC — SYNC — CABLE ASSEMBLY, M12 (REF)
OPT TIE FINDER — 4018523 — OPT TIE FINDER

RUN	COLOR	WIRE #	FROM	TERM NO.	TO	TERM NO.
1	BK	SYNC	MODJ17450:SYNC	EXISTS	MODJ17350:SYNC	EXISTS

CONFIDENTIAL

©COPYRIGHT 2011 HARSCO. THIS DRAWING OR DOCUMENT IS THE PROPERTY OF HARSCO AND EMBODIES CONFIDENTIAL INFORMATION, TRADE SECRET INFORMATION, AND/OR KNOW-HOW THAT IS THE PROPERTY OF HARSCO. BY ACCEPTING THIS DRAWING OR DOCUMENT, THE RECIPIENT AGREES (1) NOT TO PROVIDE, OR OTHERWISE MAKE AVAILABLE, THE DRAWING OR DOCUMENT, OR ANY INFORMATION OR KNOW-HOW EMBODIED THEREIN, TO ANY THIRD PARTY AND (2) NOT TO REPRODUCE OR USE THE DRAWING OR DOCUMENT TO MANUFACTURE ANY APPARATUS OR DEVICE, WITHOUT THE PRIOR WRITTEN AUTHORIZATION OF HARSCO.

CHANGE #		REVISION	DR	DATE
EC501059	A	NEW RELEASE	CJW	05/11
EC501128	B	ADDED NEW VIEWS, UPDATED CABLES	CJW	05/11
EC501418	C	REMOVED SAFETY RELAYS, UPDATED AS BUILT	CJW	06/11
EC501821	D	UPDATE AS BUILT- CABLE PART NUMBERS	CJW	08/11
EC502003	E	SWAP J04400/J04800 AND J05600/J05700 ON SHT 7 UPDATE SHT 21	CJW	09-22-11
EC502615	F	UPDATE CABLE CHARTS FOR SAT RADIO ON P.18	CJW	01-05-12
EC502851	G	UPDATE CABLES AS BUILT, SEE EC FOR CHANGE DETAIL	CJW	02-08-12
EC503310	H	SEE EC FOR CHANGE DETAIL	CJW	04-09-12

DRAWING TITLE/DESCRIPTION:
JUPITER SYSTEM INSTALLATION
Cable Charts

MACHINE TYPE-MODEL:
MARK IV

E3 PROJECT FILE NAME:
MARK IV HD_10

SHEET NUMBER: 19
NUMBER OF JUPITER SHEETS: -
TOTAL NUMBER OF SHEETS: 23

DRAWN BY: CJW
REL. DATE: 05/11
SIZE: D
SCALE:

HARSCO RAIL

E3 DRAWING
5007956

CAN:18 (REFERENCE)

DIRT ALARM FILTER P1 — J18100 — CABLE ASSEMBLY, M12
OPT FILTER KITS — 4012176 — HYD TANK (REF)

RUN	COLOR	WIRE #	FROM	TERM NO.	TO	TERM NO.
1	W-1	J17167	CAN:18:C1	EXISTS	SJ18167:2(A)	-
2	W-2	J17158	CAN:18:C1	EXISTS	SJ18167:3(C)	-
3	W-3	**NC**	CAN:18:C1	EXISTS	-	-
4	W-4	J17169	CAN:18:C1	EXISTS	SJ18167:1(B)	-
5	W-5	**NC**	CAN:18:C1	EXISTS	-	-

DIRT ALARM FILTER P2 — J18200 — CABLE ASSEMBLY, M12
OPT FILTER KITS — 4012176 — HYD TANK (REF)

RUN	COLOR	WIRE #	FROM	TERM NO.	TO	TERM NO.
1	W-1	J17267	CAN:18:C2	EXISTS	SJ18267:2(A)	-
2	W-2	J17258	CAN:18:C2	EXISTS	SJ18267:3(C)	-
3	W-3	**NC**	CAN:18:C2	EXISTS	-	-
4	W-4	J17269	CAN:18:C2	EXISTS	SJ18267:1(B)	-
5	W-5	**NC**	CAN:18:C2	EXISTS	-	-

DIRT ALARM FILTER P3 — J18300 — CABLE ASSEMBLY, M12
OPT FILTER KITS — 4012176 — HYD TANK (REF)

RUN	COLOR	WIRE #	FROM	TERM NO.	TO	TERM NO.
1	W-1	J17369	CAN:18:C3	EXISTS	SJ18367:2(A)	-
2	W-2	J17358	CAN:18:C3	EXISTS	SJ18367:3(C)	-
3	W-3	**NC**	CAN:18:C3	EXISTS	-	-
4	W-4	J17371	CAN:18:C3	EXISTS	SJ18367:1(B)	-
5	W-5	**NC**	CAN:18:C3	EXISTS	-	-

DIRT ALARM FILTER P4 — J18400 — CABLE ASSEMBLY, M12
OPT FILTER KITS — 3401331 — HYD TANK (REF)

RUN	COLOR	WIRE #	FROM	TERM NO.	TO	TERM NO.
1	W-1	J17467	CAN:18:C4	EXISTS	SJ18467:2(A)	-
2	W-2	J17458	CAN:18:C4	EXISTS	SJ18467:3(C)	-
3	W-3	**NC**	CAN:18:C4	EXISTS	-	-
4	W-4	J17469	CAN:18:C4	EXISTS	SJ18467:1(B)	-
5	W-5	**NC**	CAN:18:C4	EXISTS	-	-

DIRT ALARM FILTER P5 — J18500 — CABLE ASSEMBLY, M12
OPT FILTER KITS — 3401331 — HYD TANK (REF)

RUN	COLOR	WIRE #	FROM	TERM NO.	TO	TERM NO.
1	W-1	J17567	CAN:18:C5	EXISTS	SJ18567:2(A)	-
2	W-2	J17558	CAN:18:C5	EXISTS	SJ18567:3(C)	-
3	W-3	**NC**	CAN:18:C5	EXISTS	-	-
4	W-4	J17569	CAN:18:C5	EXISTS	SJ18567:1(B)	-
5	W-5	**NC**	CAN:18:C5	EXISTS	-	-

DIRT ALARM FILTER P6 — J18600 — CABLE ASSEMBLY, M12
OPT FILTER KITS — 3401331 — HYD TANK (REF)

RUN	COLOR	WIRE #	FROM	TERM NO.	TO	TERM NO.
1	W-1	J17667	CAN:18:C6	EXISTS	SJ18667:2(A)	-
2	W-2	J17658	CAN:18:C6	EXISTS	SJ18667:3(C)	-
3	W-3	**NC**	CAN:18:C6	EXISTS	-	-
4	W-4	J17669	CAN:18:C6	EXISTS	SJ18667:1(B)	-
5	W-5	**NC**	CAN:18:C6	EXISTS	-	-

DIRT ALARM FILTER P7 — J18700 — CABLE ASSEMBLY, M12
OPT FILTER KITS — 3401331 — HYD TANK (REF)

RUN	COLOR	WIRE #	FROM	TERM NO.	TO	TERM NO.
1	W-1	J17767	CAN:18:C7	EXISTS	SJ18767:2(A)	-
2	W-2	J17758	CAN:18:C7	EXISTS	SJ18767:3(C)	-
3	W-3	**NC**	CAN:18:C7	EXISTS	-	-
4	W-4	J17769	CAN:18:C7	EXISTS	SJ18767:1(B)	-
5	W-5	**NC**	CAN:18:C7	EXISTS	-	-

JUPITER NETWORK CABLES

CAN:01 TO CAN:02 — NET1-2 — CABLE ASSEMBLY, M12
RHC — 4022331 — RHC (REF)

RUN	COLOR	WIRE #	FROM	TERM NO.	TO	TERM NO.
1	PK	000W	CAN:02:C-IN	EXISTS	J42:1	-
2	RD	J01525	CAN:02:C-IN	EXISTS	J42:2	-
3	BU	000W	CAN:02:C-IN	EXISTS	J42:3	-
4	WH	J01558	CAN:02:C-IN	EXISTS	J42:4	-
5	BN	J01575	CAN:02:C-IN	EXISTS	J42:5	-
6	SH	**NC**	CAN:02:C-IN	EXISTS	-	-

CAN:02 TO CAN:03 — NET2-3 — CABLE ASSEMBLY, M12
RHC — 4022331 — JUP INSTALL (REF)

RUN	COLOR	WIRE #	FROM	TERM NO.	TO	TERM NO.
1	PU	NET2-3	CAN:02:C-OUT	EXISTS	CAN:03:C-IN	EXISTS

CAN:03 TO CAN:04 — NET3-4 — CABLE ASSEMBLY, M12
JUP INSTALL — 4022324 — JUP INSTALL (410 / 2) (120 / 2) (150 / 1)

RUN	COLOR	WIRE #	FROM	TERM NO.	TO	TERM NO.
1	PU	-	CAN:03:C-OUT	EXISTS	CAN:04:C-IN	EXISTS

CAN:04 TO CAN:05 — NET4-5 — CABLE ASSEMBLY, M12
JUP INSTALL — 4022324 — JUP INSTALL (410 / 2) (120 / 2) (150 / 1)

RUN	COLOR	WIRE #	FROM	TERM NO.	TO	TERM NO.
1	PU	-	CAN:04:C-OUT	EXISTS	CAN:05:C-IN	EXISTS

CAN:05 TO CAN:06 — NET5-6 — CABLE ASSEMBLY, M12
JUP INSTALL — 4022329 — MCB (410 / 2) (120 / 2) (190 / 1)

RUN	COLOR	WIRE #	FROM	TERM NO.	TO	TERM NO.
1	PU	-	CAN:05:C-OUT	EXISTS	CAN:06:C-IN	EXISTS

CAN:06 TO CAN:07 — NET6-7 — CABLE ASSEMBLY, M12
MCB — 4022330 — JUP INSTALL (410 / 2) (120 / 2) (200 / 1)

RUN	COLOR	WIRE #	FROM	TERM NO.	TO	TERM NO.
1	PU	-	CAN:06:C-OUT	EXISTS	CAN:07:C-IN	EXISTS

CAN:07 TO CAN: 08 — NET7-8 — CABLE ASSEMBLY, M12
JUP INSTALL — 4022325 — JUP INSTALL (410 / 2) (120 / 2) (160 / 1)

RUN	COLOR	WIRE #	FROM	TERM NO.	TO	TERM NO.
1	PU	-	CAN:07:C-OUT	EXISTS	CAN:08:C-IN	EXISTS

CAN:08 TO CAN:09 — NET8-9 — CABLE ASSEMBLY, M12
JUP INSTALL — 4022329 — JUP INSTALL (410 / 2) (120 / 2) (190 / 1)

RUN	COLOR	WIRE #	FROM	TERM NO.	TO	TERM NO.
1	PU	-	CAN:08:C-OUT	EXISTS	CAN:09:C-IN	EXISTS

CAN:09 TO CAN:10 — NET9-10 — CABLE ASSEMBLY, M12
JUP INSTALL — 4022325 — JUP INSTALL (410 / 2) (120 / 2) (160 / 1)

RUN	COLOR	WIRE #	FROM	TERM NO.	TO	TERM NO.
1	PU	-	CAN:09:C-OUT	EXISTS	CAN:10:C-IN	EXISTS

CAN:10 TO CAN:11 — NET10-11 — CABLE ASSEMBLY, M12
JUP INSTALL — 4022326 — JUP INSTALL (410 / 2) (120 / 2) (170 / 1)

RUN	COLOR	WIRE #	FROM	TERM NO.	TO	TERM NO.
1	PU	-	CAN:10:C-OUT	EXISTS	CAN:11:C-IN	EXISTS

CAN:11 TO CAN:12 — NET11-12 — CABLE ASSEMBLY, M12
JUP INSTALL — 4022325 — JUP INSTALL (410 / 2) (120 / 2) (160 / 1)

RUN	COLOR	WIRE #	FROM	TERM NO.	TO	TERM NO.
1	PU	-	CAN:11:C-OUT	EXISTS	CAN:12:C-IN	EXISTS

CAN:12 TO CAN:13 — NET12-13 — CABLE ASSEMBLY, M12
JUP INSTALL — 4022326 — JUP INSTALL (410 / 2) (120 / 2) (170 / 1)

RUN	COLOR	WIRE #	FROM	TERM NO.	TO	TERM NO.
1	PU	-	CAN:12:C-OUT	EXISTS	CAN:13:C-IN	EXISTS

CAN:13 TO CAN:14 — NET13-14 — CABLE ASSEMBLY, M12
JUP INSTALL — 4022326 — JUP INSTALL (410 / 2) (120 / 2) (170 / 1)

RUN	COLOR	WIRE #	FROM	TERM NO.	TO	TERM NO.
1	PU	-	CAN:13:C-OUT	EXISTS	CAN:14:C-IN	EXISTS

JUPITER NETWORK CABLES (CONT'D)

CAN:14 TO CAN:15 — NET14-15 — CABLE ASSEMBLY, M12
JUP INSTALL — 4022331 — JUP INSTALL (410 / 2) (120 / 2) (210 / 1)

RUN	COLOR	WIRE #	FROM	TERM NO.	TO	TERM NO.
1	PU	-	CAN:14:C-OUT	EXISTS	CAN:15:C-IN	EXISTS

CAN:15 TO CAN:16 — NET15-16 — CABLE ASSEMBLY, M12
JUP INSTALL — 4022325 — JUP INSTALL (410 / 2) (120 / 2) (160 / 1)

RUN	COLOR	WIRE #	FROM	TERM NO.	TO	TERM NO.
1	PU	-	CAN:15:C-OUT	EXISTS	CAN:16:C-IN	EXISTS

CAN:16 TO CAN:17 — NET16-17 — CABLE ASSEMBLY, M12
JUP INSTALL — 4022325 — JUP INSTALL (410 / 2) (120 / 2) (160 / 1)

RUN	COLOR	WIRE #	FROM	TERM NO.	TO	TERM NO.
1	PU	-	CAN:16:C-OUT	EXISTS	CAN:17:C-IN	EXISTS

CAN:16 TO CAN:17 — NET17-18 — CABLE ASSEMBLY, M12
OPT FILTER KITS — 4022330 — OPT FILTER KITS (REF)

RUN	COLOR	WIRE #	FROM	TERM NO.	TO	TERM NO.
1	PU	NET17-18	CAN:17:C-OUT	EXISTS	CAN:18:C-IN	EXISTS

NETWORK TERMINATOR — NET_END
JUP INSTALL — 3406480 (410 / 2) (120 / 2) (100 / 1)

RUN	COLOR	WIRE #	FROM	TERM NO.	TO	TERM NO.
1	M12	NET 17	CAN: 17-C-OUT	-	-	-

CONFIDENTIAL

©COPYRIGHT 2011 HARSCO. THIS DRAWING OR DOCUMENT IS THE PROPERTY OF HARSCO AND EMBODIES CONFIDENTIAL INFORMATION, TRADE SECRET INFORMATION, AND/OR KNOW-HOW THAT IS THE PROPERTY OF HARSCO. BY ACCEPTING THIS DRAWING OR DOCUMENT, THE RECIPIENT AGREES (1) NOT TO PROVIDE, OR OTHERWISE MAKE AVAILABLE, THE DRAWING OR DOCUMENT, OR ANY INFORMATION OR KNOW-HOW EMBODIED THEREIN, TO ANY THIRD PARTY AND (2) NOT TO REPRODUCE OR USE THE DRAWING OR DOCUMENT TO MANUFACTURE ANY APPARATUS OR DEVICE, WITHOUT THE PRIOR WRITTEN AUTHORIZATION OF HARSCO.

CHANGE #		REVISION	DR	DATE
EC501059	A	NEW RELEASE	CJW	05/11
EC501128	B	ADDED NEW VIEWS, UPDATED CABLES	CJW	05/11
EC501418	C	REMOVED SAFETY RELAYS, UPDATED AS BUILT	CJW	06/11
EC501821	D	UPDATE AS BUILT- CABLE PART NUMBERS	CJW	08/11
EC502003	E	SWAP J04400/J04800 AND J05600/J05700 ON SHT 7 UPDATE SHT 21	CJW	09-22-11
EC502615	F	UPDATE CABLE CHARTS FOR SAT RADIO ON P.18	CJW	01-05-12
EC502851	G	UPDATE CABLES AS BUILT, SEE EC FOR CHANGE DETAIL	CJW	02-08-12
EC503310	H	SEE EC FOR CHANGE DETAIL	CJW	04-09-12

DRAWING TITLE/DESCRIPTION:
JUPITER SYSTEM INSTALLATION
Cable Charts

MACHINE TYPE-MODEL:
MARK IV

E3 PROJECT FILE NAME:
MARK IV HD_10

SHEET NUMBER: 20
NUMBER OF JUPITER SHEETS: -
TOTAL NUMBER OF SHEETS: 23

DRAWN BY: CJW
REL. DATE: 05/11
SIZE: D
SCALE:

HARSCO RAIL

E3 DRAWING
5007956

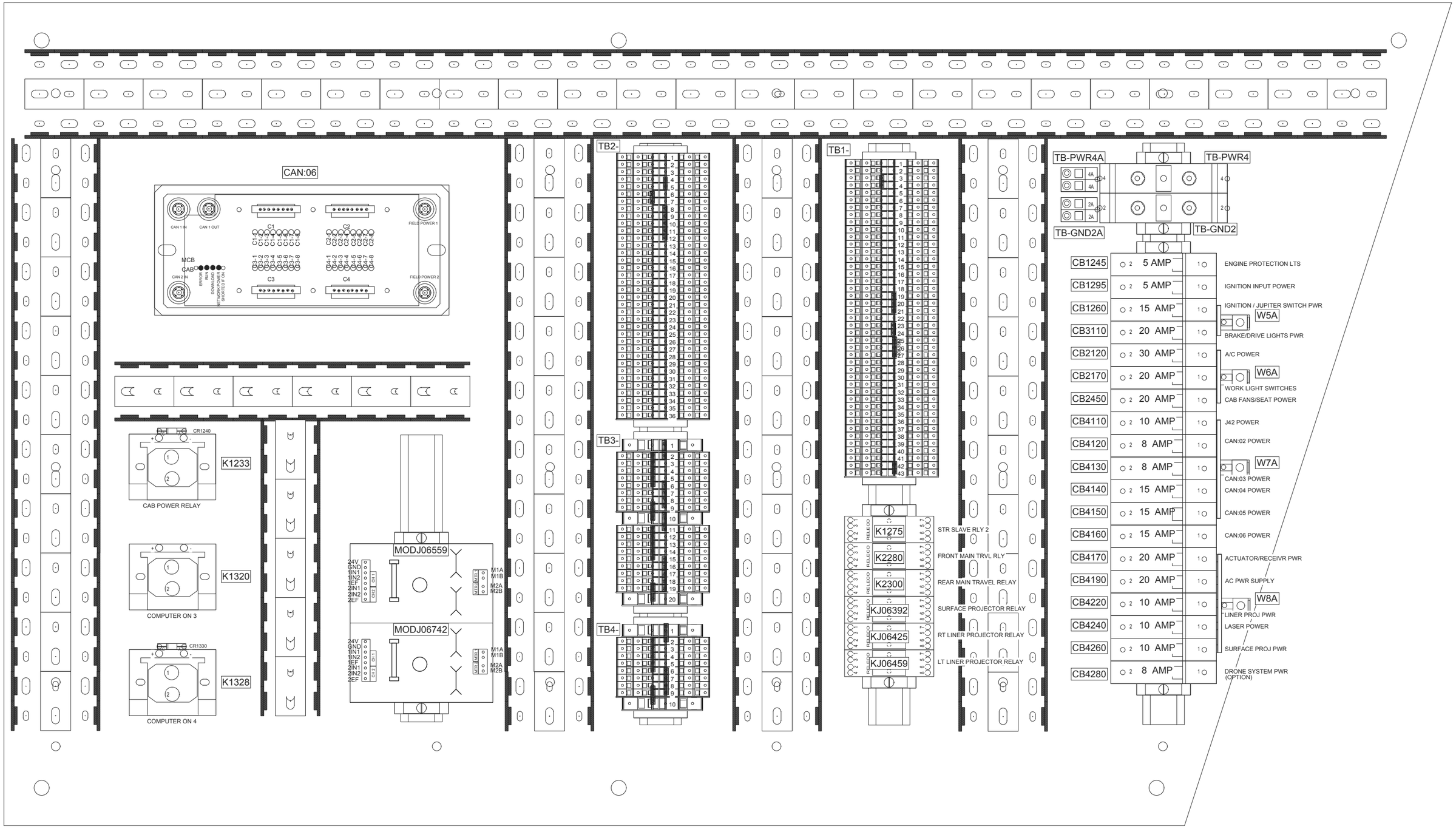

CONFIDENTIAL

©COPYRIGHT 2011 HARSCO. THIS DRAWING OR DOCUMENT IS THE PROPERTY OF HARSCO AND EMBODIES CONFIDENTIAL INFORMATION, TRADE SECRET INFORMATION, AND/OR KNOW-HOW THAT IS THE PROPERTY OF HARSCO. BY ACCEPTING THIS DRAWING OR DOCUMENT, THE RECIPIENT AGREES (1) NOT TO PROVIDE, OR OTHERWISE MAKE AVAILABLE, THE DRAWING OR DOCUMENT, OR ANY INFORMATION OR KNOW-HOW EMBODIED THEREIN, TO ANY THIRD PARTY AND (2) NOT TO REPRODUCE OR USE THE DRAWING OR DOCUMENT TO MANUFACTURE ANY APPARATUS OR DEVICE, WITHOUT THE PRIOR WRITTEN AUTHORIZATION OF HARSCO.

CHANGE #		REVISION	DR	DATE
EC501059	A	NEW RELEASE	CJW	05/11
EC501128	B	ADDED NEW VIEWS, UPDATED CABLES	CJW	05/11
EC501418	C	REMOVED SAFETY RELAYS, UPDATED AS BUILT	CJW	06/11
EC501821	D	UPDATE AS BUILT- CABLE PART NUMBERS	CJW	08/11
EC502003	E	SWAP J04400/J04800 AND J05600/J05700 ON SHT 7 UPDATE SHT 21	CJW	09-22-11
EC502615	F	UPDATE CABLE CHARTS FOR SAT RADIO ON P.18	CJW	01-05-12
EC502851	G	UPDATE CABLES AS BUILT, SEE EC FOR CHANGE DETAIL	CJW	02-08-12
EC503310	H	SEE EC FOR CHANGE DETAIL	CJW	04-09-12

DRAWING TITLE/DESCRIPTION:
JUPITER SYSTEM INSTALLATION
Main Control Board (MCB)

MACHINE TYPE-MODEL:
MARK IV

E3 PROJECT FILE NAME:
MARK IV HD_10

SHEET NUMBER: 21
NUMBER OF JUPITER SHEETS: -
TOTAL NUMBER OF SHEETS: 23

DRAWN BY: CJW
REL. DATE: 05/11
SIZE: D
SCALE:

HARSCO RAIL

E3 DRAWING

5007956

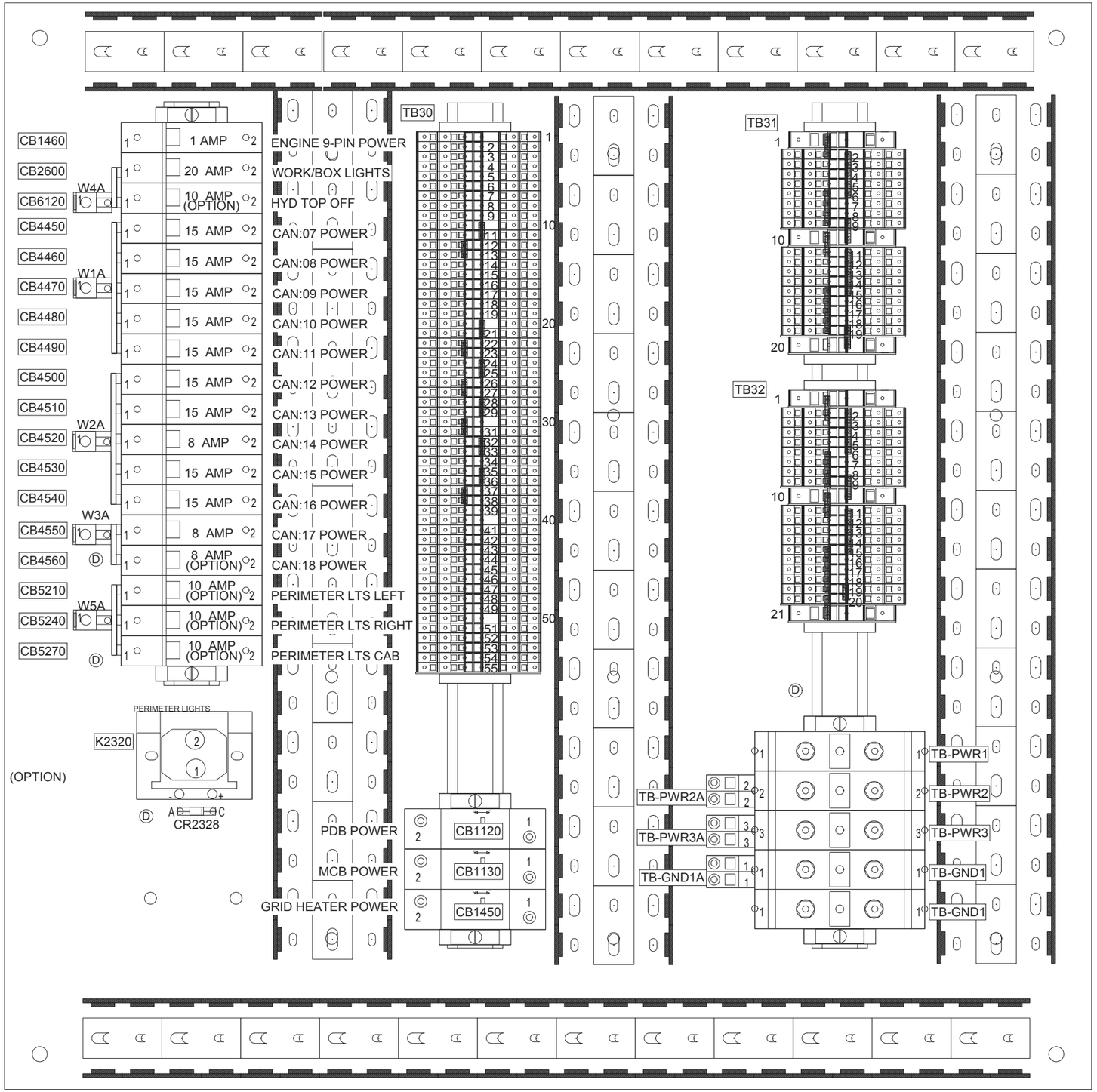

CONFIDENTIAL

©COPYRIGHT 2011 HARSCO. THIS DRAWING OR DOCUMENT IS THE PROPERTY OF HARSCO AND EMBODIES CONFIDENTIAL INFORMATION, TRADE SECRET INFORMATION, AND/OR KNOW-HOW THAT IS THE PROPERTY OF HARSCO. BY ACCEPTING THIS DRAWING OR DOCUMENT, THE RECIPIENT AGREES (1) NOT TO PROVIDE, OR OTHERWISE MAKE AVAILABLE, THE DRAWING OR DOCUMENT, OR ANY INFORMATION OR KNOW-HOW EMBODIED THEREIN, TO ANY THIRD PARTY AND (2) NOT TO REPRODUCE OR USE THE DRAWING OR DOCUMENT TO MANUFACTURE ANY APPARATUS OR DEVICE, WITHOUT THE PRIOR WRITTEN AUTHORIZATION OF HARSCO.

CHANGE #		REVISION	DR	DATE
EC501059	A	NEW RELEASE	CJW	05/11
EC501128	B	ADDED NEW VIEWS, UPDATED CABLES	CJW	05/11
EC501418	C	REMOVED SAFETY RELAYS, UPDATED AS BUILT	CJW	06/11
EC501821	D	UPDATE AS BUILT- CABLE PART NUMBERS	CJW	08/11
EC502003	E	SWAP J04400/J04800 AND J05600/J05700 ON SHT 7 UPDATE SHT 21	CJW	09-22-11
EC502615	F	UPDATE CABLE CHARTS FOR SAT RADIO ON P.18	CJW	01-05-12
EC502851	G	UPDATE CABLES AS BUILT, SEE EC FOR CHANGE DETAIL	CJW	02-08-12
EC503310	H	SEE EC FOR CHANGE DETAIL	CJW	04-09-12

DRAWING TITLE/DESCRIPTION:
JUPITER SYSTEM INSTALLATION
Power Distribution Box (PDB)

MACHINE TYPE-MODEL:
MARK IV

E3 PROJECT FILE NAME:
MARK IV HD_10

SHEET NUMBER: 22
NUMBER OF JUPITER SHEETS: -
TOTAL NUMBER OF SHEETS: 23

DRAWN BY: CJW
REL. DATE: 05/11
SIZE: D
SCALE:

HARSCO RAIL

E3 DRAWING
5007956

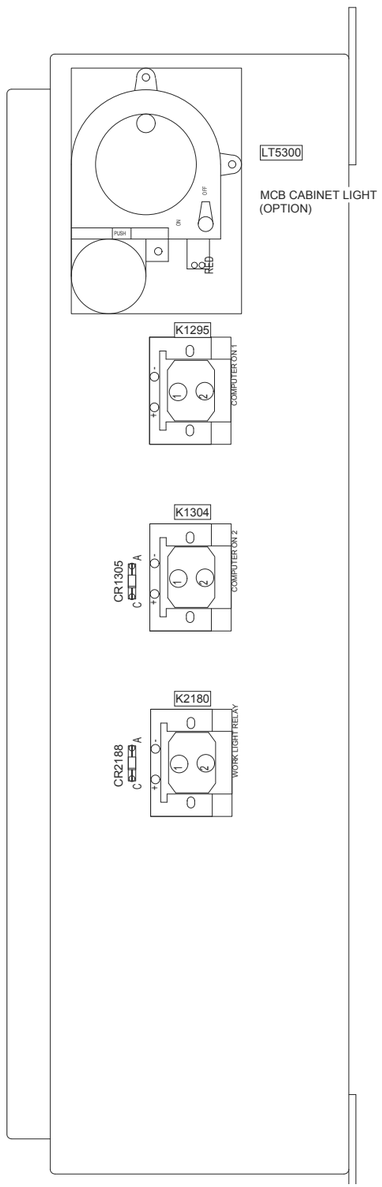

INSIDE VIEW OF SIDE

LEFT

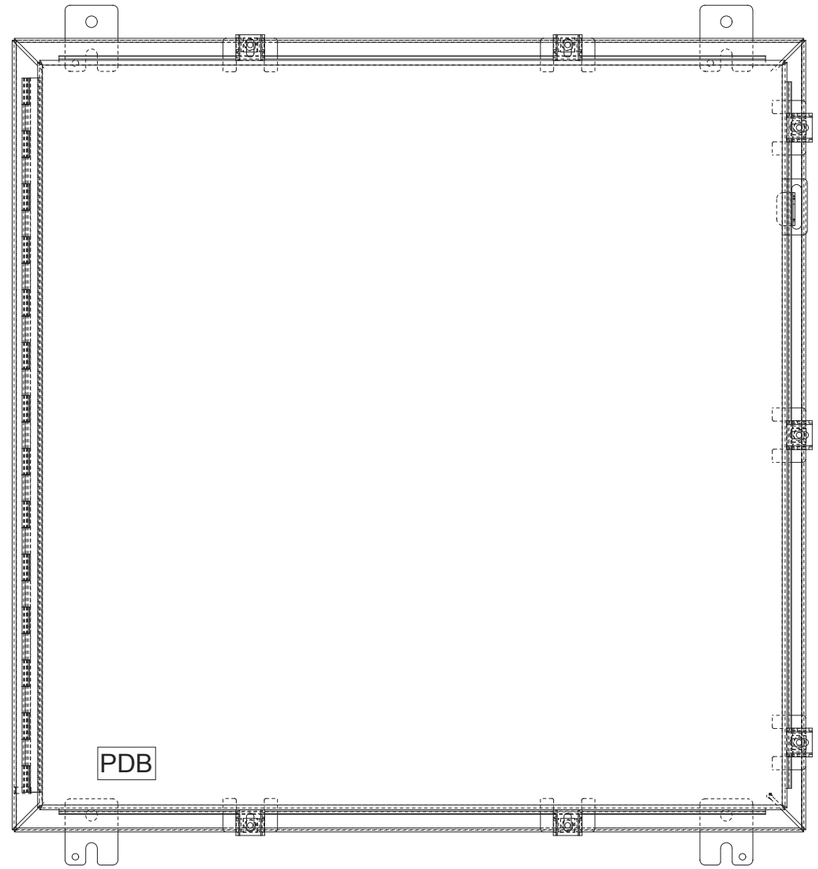

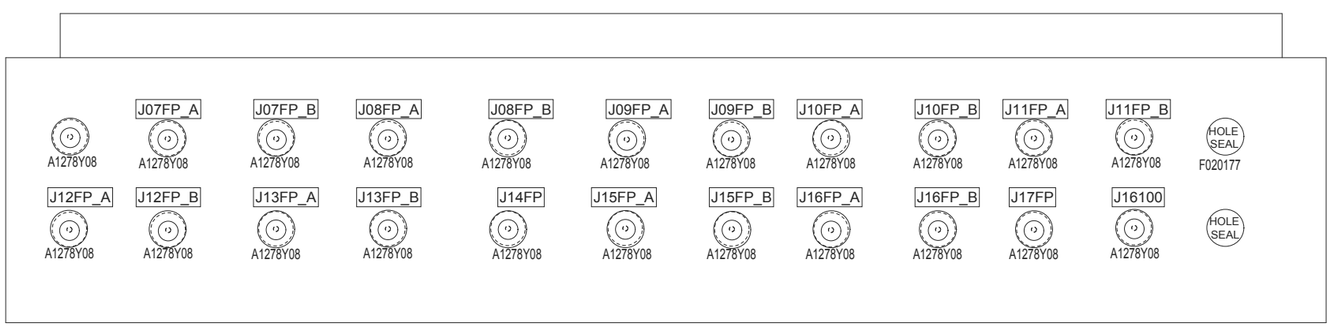

BOTTOM

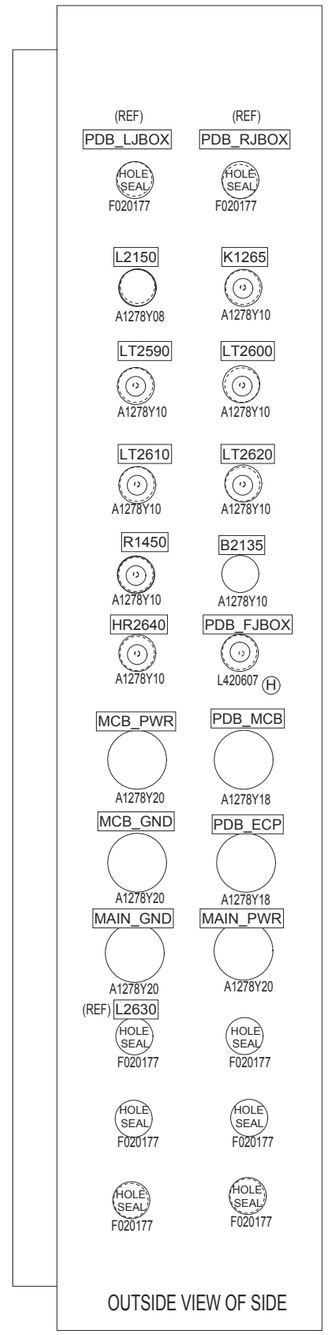

OUTSIDE VIEW OF SIDE

RIGHT

* = ROUTE CABLE WITH JACKET ON IN THE ENCLOSURE.
SOME CABLE GRIPS WILL NOT HAVE CABLES IN THEM.

CONFIDENTIAL

©COPYRIGHT 2011 HARSCO. THIS DRAWING OR DOCUMENT IS THE PROPERTY OF HARSCO AND EMBODIES CONFIDENTIAL INFORMATION, TRADE SECRET INFORMATION, AND/OR KNOW-HOW THAT IS THE PROPERTY OF HARSCO. BY ACCEPTING THIS DRAWING OR DOCUMENT, THE RECIPIENT AGREES (1) NOT TO PROVIDE, OR OTHERWISE MAKE AVAILABLE, THE DRAWING OR DOCUMENT, OR ANY INFORMATION OR KNOW-HOW EMBODIED THEREIN, TO ANY THIRD PARTY AND (2) NOT TO REPRODUCE OR USE THE DRAWING OR DOCUMENT TO MANUFACTURE ANY APPARATUS OR DEVICE, WITHOUT THE PRIOR WRITTEN AUTHORIZATION OF HARSCO.

CHANGE #		REVISION	DR	DATE
EC501059	A	NEW RELEASE	CJW	05/11
EC501128	B	ADDED NEW VIEWS, UPDATED CABLES	CJW	05/11
EC501418	C	REMOVED SAFETY RELAYS, UPDATED AS BUILT	CJW	06/11
EC501821	D	UPDATE AS BUILT- CABLE PART NUMBERS	CJW	08/11
EC502003	E	SWAP J04400/J04800 AND J05600/J05700 ON SHT 7 UPDATE SHT 21	CJW	09-22-11
EC502615	F	UPDATE CABLE CHARTS FOR SAT RADIO ON P.18	CJW	01-05-12
EC502851	G	UPDATE CABLES AS BUILT, SEE EC FOR CHANGE DETAIL	CJW	02-08-12
EC503310	H	SEE EC FOR CHANGE DETAIL	CJW	04-09-12

DRAWING TITLE/DESCRIPTION:
JUPITER SYSTEM INSTALLATION
Power Distribution Box (PDB)

MACHINE TYPE-MODEL:
MARK IV

E3 PROJECT FILE NAME:
MARK IV HD_10

SHEET NUMBER: 23
NUMBER OF JUPITER SHEETS: -
TOTAL NUMBER OF SHEETS: 23

DRAWN BY: CJW
REL. DATE: 05/11
SIZE: D
SCALE:

HARSCO RAIL

E3 DRAWING
5007956

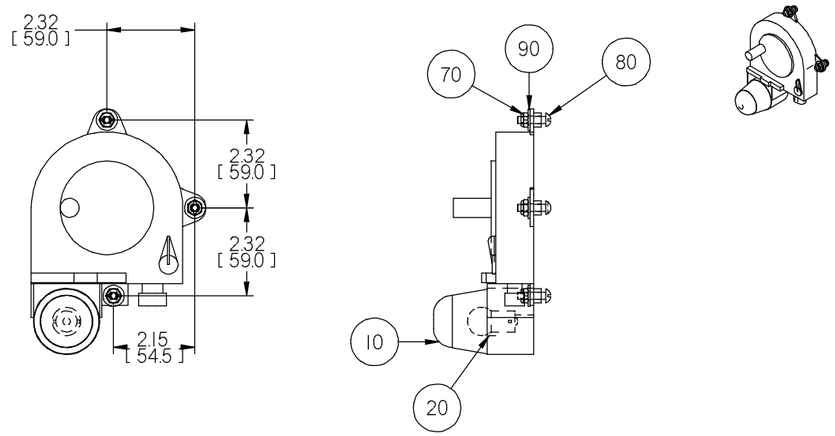

ASSEMBLE PARTS AS SHOWN
SOLDER AND HEAT SHRINK WIRES USING ITEM 50

REFER TO PDB ASSEMBLY OR ELECTRICAL SCHEMATIC FOR WIRING INFORMATION

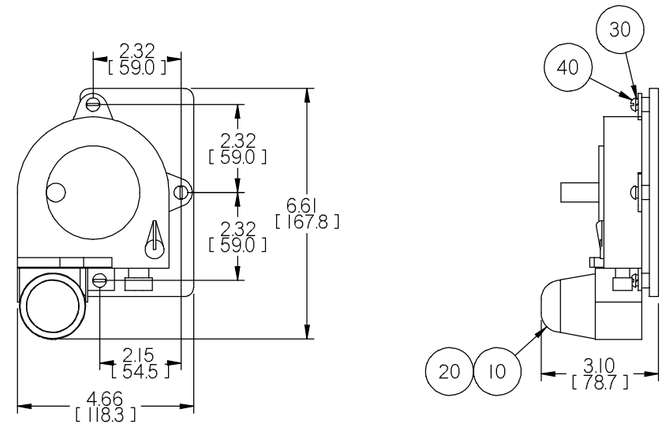

ASSEMBLE PARTS AS SHOWN
SOLDER AND HEAT SHRINK WIRES USING ITEM 50

REFER TO CAB WIRING OR ELECTRICAL SCHEMATIC FOR WIRING INFORMATION

Find	Item Id	Item Name	Quantity
10	F040972	LIGHT	2
20	174771	BULB	2
30	F025837	LOCK WASHER	3
40	F010502	DC-RD HD MS #10-24X1/2 ZP	3
50	151655-10	HEAT SHRINK TUBE	1
60	5008067	TAPPING PAD-CABINET LIGHT	1
70	F018029K	#10-24 ELASTIC STOP NUT	3
80	F009591	RD HD MS #10-24X3/4 ZP	3
90	F001050	DC-WROUGHT WASHER #10(.190)	3

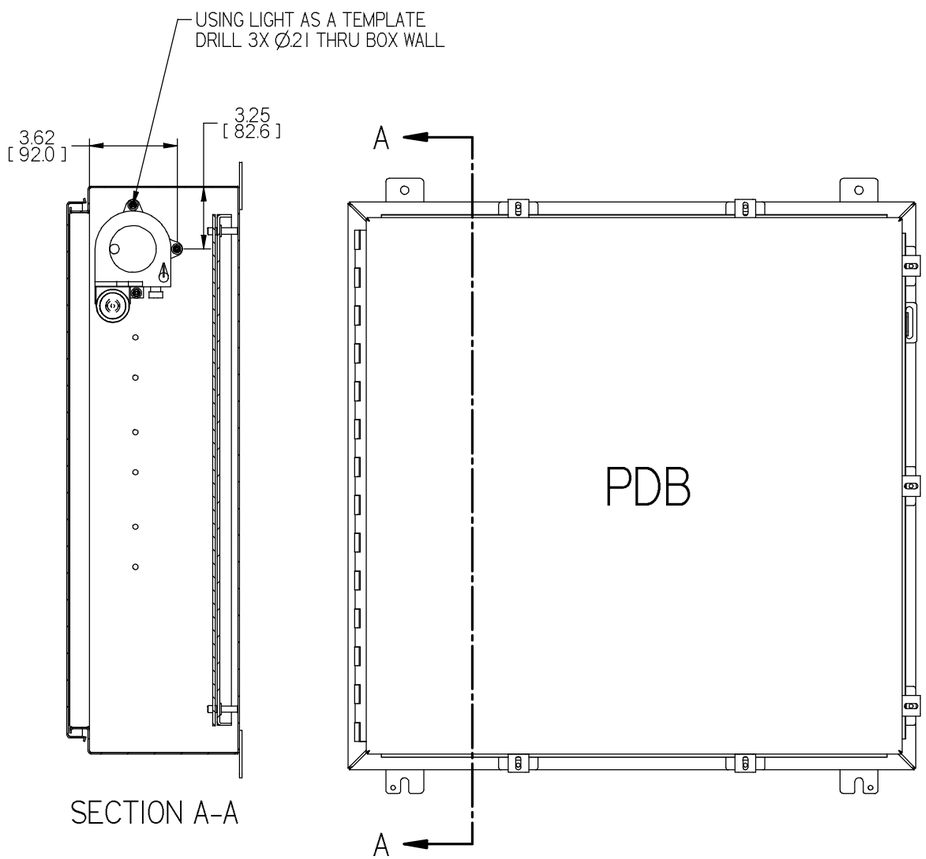

SECTION A-A

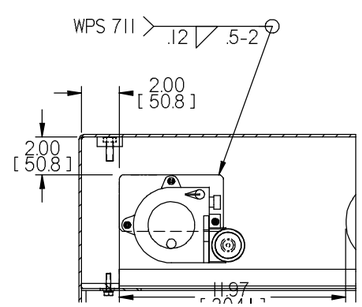

SECTION B -B

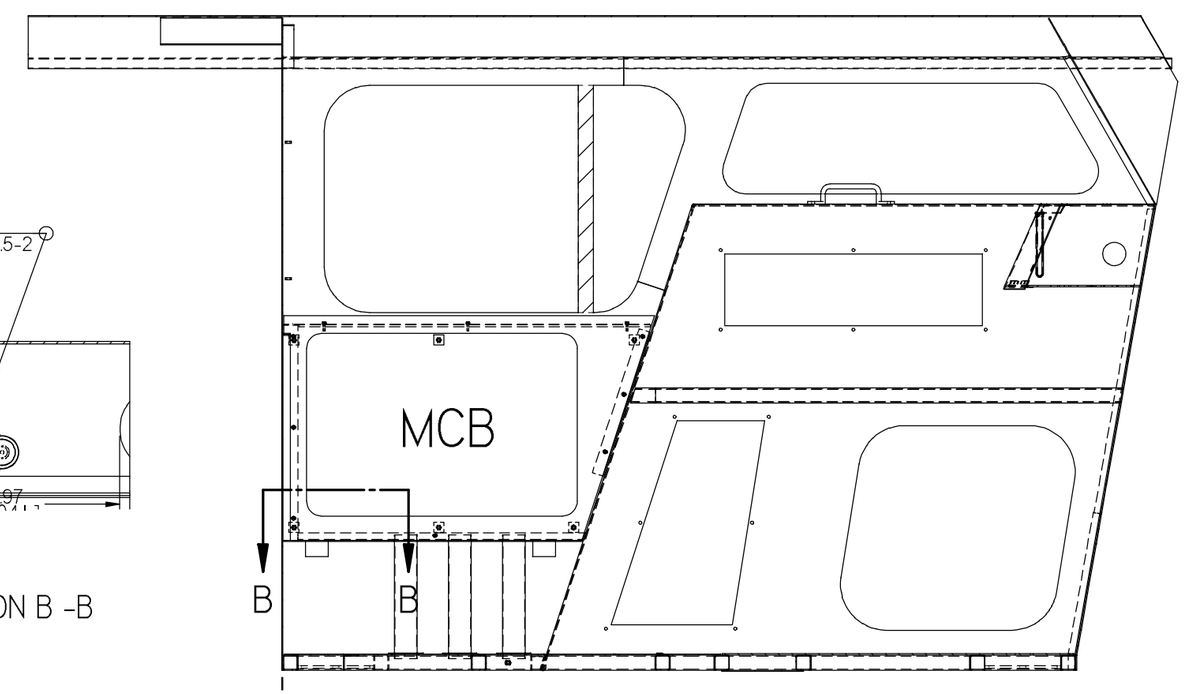

CAB LH INSIDE

Inch
[mm]

CONFIDENTIAL
© COPYRIGHT 2011 HARSCO. THIS DRAWING OR DOCUMENT IS THE PROPERTY OF HARSCO AND EMBODIES CONFIDENTIAL INFORMATION, TRADE SECRET INFORMATION, AND/OR KNOW-HOW THAT IS THE PROPERTY OF HARSCO. BY ACCEPTING THIS DRAWING OR DOCUMENT, THE RECIPIENT AGREES (1) NOT TO PROVIDE, OR OTHERWISE MAKE AVAILABLE, THE DRAWING OR DOCUMENT, OR ANY INFORMATION OR KNOW-HOW EMBODIED THEREIN, TO ANY THIRD PARTY AND (2) NOT TO REPRODUCE OR USE THE DRAWING OR DOCUMENT TO MANUFACTURE ANY APPARATUS OR DEVICE, WITHOUT THE PRIOR WRITTEN AUTHORIZATION OF HARSCO.

NOMINAL SIZE RANGE		INCH PLUS OR MINUS	
OVER	TO	2 PLACE DECIMAL	3 PLACE DECIMAL
0	6	.03	.005
6	24	.04	.008
24	-	.06	.010

NOMINAL SIZE RANGE		METRIC PLUS OR MINUS	
OVER	TO	1 PLACE DECIMAL	2 PLACE DECIMAL
0	150	.5	.13
150	600	1.0	.20
600	-	1.5	.25

UNLESS OTHERWISE SPECIFIED ALL MACHINED SURFACES WILL HAVE:
A SURFACE FINISH OF 125 MICROINCHES
ANGULAR TOLERANCE OF +- .87
CONCENTRICITY WITHIN .010

THIRD ANGLE PROJECTION

UNLESS OTHERWISE SPECIFIED, ALL WELDS SHOULD ADHERE TO THE MOST CURRENT A.W.S WELDING STANDARDS

CHANGE	R/L	REVISION	DR	DATE
EC500952	A	NEW RELEASE	BJE	04-20-11
EC501114	B	SEE ECN	BJE	06-28-11

Description: CABINET LIGHT KIT

HARSCO RAIL

Material: _

Machine Type: MARK IV CP

Size: D

Weight: 0.0 lbm

Drawn: bedel

Date Drawn: 6/27/2011

Part Number: 5007874

Sheet: 1 of 1

SOLID EDGE DRAWING

DO NOT SCALE

PRODUCT STRUCTURE

ITEM	PART #	QTY	PART DESCRIPTION	
10	151655-1	3FT	SHRINK TUBING	: TUBING 0.375 I.D. TO .12 SHRUNK
20	172164	1	RELAY, POWER	: SPNO 100A 24VDC COIL
30	409760	3	TERMINAL, RING	: 5/16" RING, 4 AWG, NON-INSULATED
40	3406646	8FT	WIRE	: 16AWG / RED, TYPE MTW
50	3406649	8FT	WIRE	: 16AWG / GREEN, TYPE MTW
60	3407024	90FT	WIRE	: 16AWG / WHITE, TYPE MTW
70	4019171	16	TAGS, CABLE	: PLASTIC CABLE TAG SLEEVE
80	4020601	2	BOX ASSEMBLY	: 4X6X3 NEMA 4 JB ASSY
90	4021352	2	MOUNTING PLATE	: MOUNTING PLATE FOR 4X6X3 JB
100	0-3101019-0-09	1	LIGHT, BULB	: 36VDC DOUBLE CONTACT BAYONET BULB
110	A0653Y01	1	CONTACT BLOCK	: 2 N.O. CONTACTS BLOCK
120	A0655Y07	1	SWITCH, PUSHBUTTON	: LIGHTED MAINTAINED PUSHBUTTON (YELLOW)
130	A1278Y10	4	CABLE GRIP	: CABLE FROM: 0.300 - 0.400'' 1/2" NPT 90°
140	A1563Y04	2	INSERT, THREADED	: #10X24 PLATED STEEL
150	A2197Y06	8	LIGHT, WORK LIGHT	: FLOOD LIGHT
160	B1382Y08	2	END CAP	: FOR SIEMENS BUS BAR
170	B1382Y09	1	BUSS CONNECTOR	: FOR SIEMENS 80 AMP BUS BAR #12 UP TO #2 AWG
180	B1623Y01	10	CONDUIT, CORRUGATED	: 1/4" CORRUGATED CONDUIT
190	C9678Y09	3	CIRCUIT BREAKER	: 10 AMP BREAKER DIN RAIL MOUNT
200	F001050	2	WASHER	: WROUGHT WASHER #10 (.190)
210	F004320K	2	TERMINAL, RING	: #10 RING, 16-14 AWG, INSULATED
220	F009594	2	SCREW	: #10-24X5/8 ROUND HEAD MACHINE SCREW ZP
230	F009863	16	TERMINAL, BUTT	: BUTT CONNECTER, 16-14AWG
240	F012388	120FT	CABLE, MULTICONDUCTOR	: 16AWG/2 CONDUCTOR .405 O.D 13A/CONDUCTOR
250	F018229	16	TY-RAP	: SMALL TY-RAP 3 1/2"
260	F019878	2	LOCK NUT	: 1/2" NUT
270	F020241	9FT	WIRE	: 4AWG / RED
280	F021257	1FT	SHRINK TUBING	: TUBING .50 I.D. SHRINK RATE .28 TO .45IN
290	F025837	2	WASHER	: LOCK WASHER #10
300	F040134	7	DECAL	: COMPONENT LABEL
310	F040174	1	DIODE	: 3A 200 PIV RECTIFIER
320	G5510Y01	8	MOUNTING PLATE	: MOUNTING PLATE FOR FLOOD LIGHTS
330	H1828Y49	1	INSERT, FILM	: FILM INSERT, LIGHT DECAL
340	H4985Y06	1	BUSS BAR	: 3 SLOT CIRCUIT BREAKER BUSS BAR
350	L422504	2	TERMINAL, RING	: #10 RING, 22-18 AWG, INSULATED

CONFIDENTIAL

©COPYRIGHT 2011 HARSCO. THIS DRAWING OR DOCUMENT IS THE PROPERTY OF HARSCO AND EMBODIES CONFIDENTIAL INFORMATION, TRADE SECRET INFORMATION, AND/OR KNOW-HOW THAT IS THE PROPERTY OF HARSCO. BY ACCEPTING THIS DRAWING OR DOCUMENT, THE RECIPIENT AGREES (1) NOT TO PROVIDE, OR OTHERWISE MAKE AVAILABLE, THE DRAWING OR DOCUMENT, OR ANY INFORMATION OR KNOW-HOW EMBODIED THEREIN, TO ANY THIRD PARTY AND (2) NOT TO REPRODUCE OR USE THE DRAWING OR DOCUMENT TO MANUFACTURE ANY APPARATUS OR DEVICE, WITHOUT THE PRIOR WRITTEN AUTHORIZATION OF HARSCO.

CHANGE #		REVISION	DR	DATE
EC501724	A	NEW RELEASE	CJW	08/11

DRAWING TITLE/DESCRIPTION:
KIT, PERIMETER LIGHT, MKIV-HD
Bill Of Material

MACHINE TYPE-MODEL:
MARK IV

E3 PROJECT FILE NAME:
MARK IV HD_4

SHEET NUMBER: 1
NUMBER OF JUPITER SHEETS: 0
TOTAL NUMBER OF SHEETS: 4

DRAWN BY: CJW
REL. DATE: 08/11
SIZE: D
SCALE:

HARSCO RAIL

E3 DRAWING
5010288

PERIM_LTS_ECP				WIRING CHART				
RUN	WIRE	SIZE	COLOR	FROM	TERM NO.	TO	TERM NO.	PART NO
1	000	16 AWG	Green	S2310:-X1	-	TB10:40	-	3406649
2	2170	16 AWG	Red	S2310:13	-	TB10:13	-	3406646
3	2170	16 AWG	Red	S2310:23	-	S2310:13	-	3406646
4	2310	16 AWG	White	S2310:14	-	S2310:+X2	-	3407024
5	2320	16 AWG	White	S2310:24	-	TB10:21	-	3407024

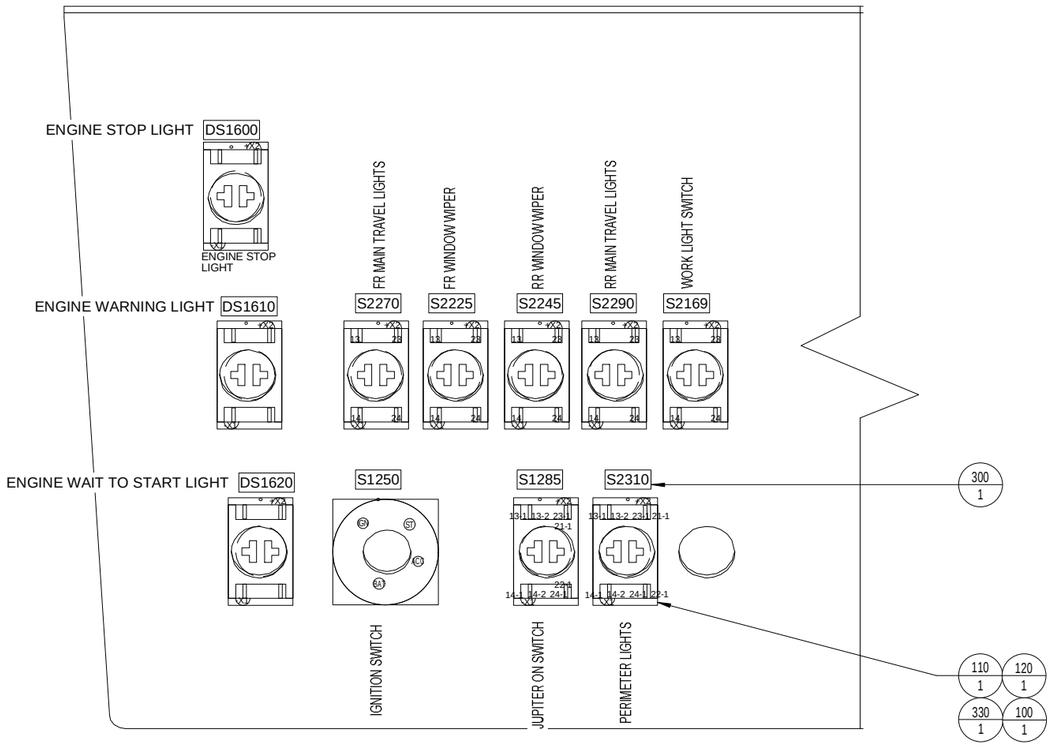

BACK OF KEYBOARD SUPPORT

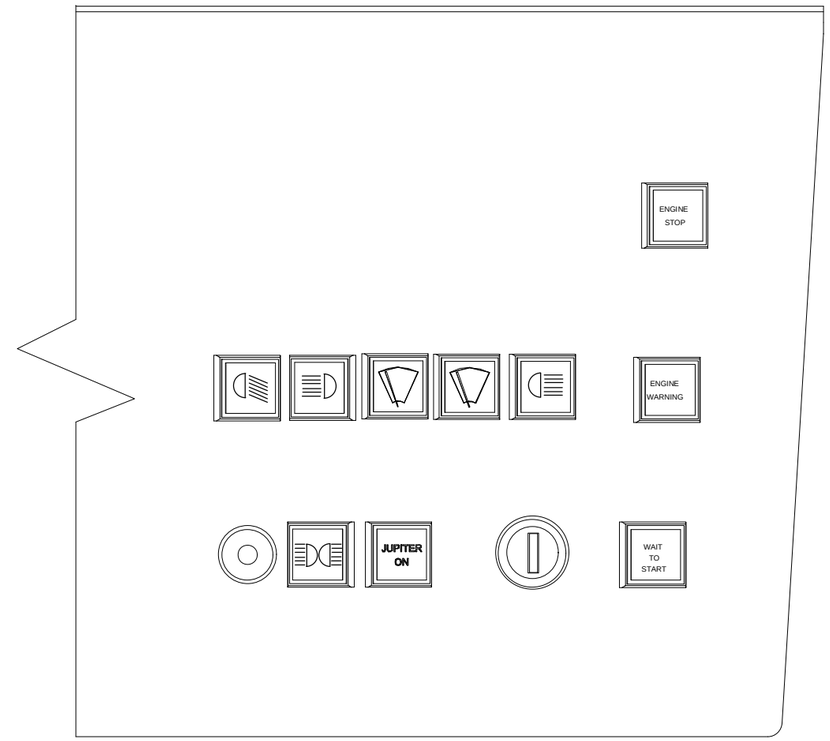

FRONT OF KEYBOARD SUPPORT

NOTES:

1. USE TYRAPS (F018229) AS REQUIRED TO BUNDLE WIRES SECURELY.
2. REMOVE HOLE PLUG (0-3274003-0-04) AND RETURN TO STOCK.
3. INSERT PERIMETER LIGHT SWITCH IN HOLE AS SHOWN
4. ROUTE WIRES FOLLOWING EXISTING WIRES IN PANEL.
5. MARK WIRES PER HTT W.I. 18525
6. DO NOT USE FERRULE TERMINALS WITH TERMINAL BLOCKS
7. USE F040134 DECAL TO LABEL SWITCH AS SHOWN.

CONFIDENTIAL

©COPYRIGHT 2011 HARSCO. THIS DRAWING OR DOCUMENT IS THE PROPERTY OF HARSCO AND EMBODIES CONFIDENTIAL INFORMATION, TRADE SECRET INFORMATION, AND/OR KNOW-HOW THAT IS THE PROPERTY OF HARSCO. BY ACCEPTING THIS DRAWING OR DOCUMENT, THE RECIPIENT AGREES (1) NOT TO PROVIDE, OR OTHERWISE MAKE AVAILABLE, THE DRAWING OR DOCUMENT, OR ANY INFORMATION OR KNOW-HOW EMBODIED THEREIN, TO ANY THIRD PARTY AND (2) NOT TO REPRODUCE OR USE THE DRAWING OR DOCUMENT TO MANUFACTURE ANY APPARATUS OR DEVICE, WITHOUT THE PRIOR WRITTEN AUTHORIZATION OF HARSCO.

CHANGE #		REVISION	DR	DATE
EC501724	A	NEW RELEASE	CJW	08/11

DRAWING TITLE/DESCRIPTION: KIT, PERIMETER LIGHT, MKIV-HD ECP Assembly Wiring

MACHINE TYPE-MODEL: MARK IV

E3 PROJECT FILE NAME: MARK IV HD_4

SHEET NUMBER: 2

NUMBER OF JUPITER SHEETS: 0

TOTAL NUMBER OF SHEETS: 4

DRAWN BY: CJW

REL. DATE: 08/11

SIZE: D

SCALE:

HARSCO RAIL

E3 DRAWING

5010288

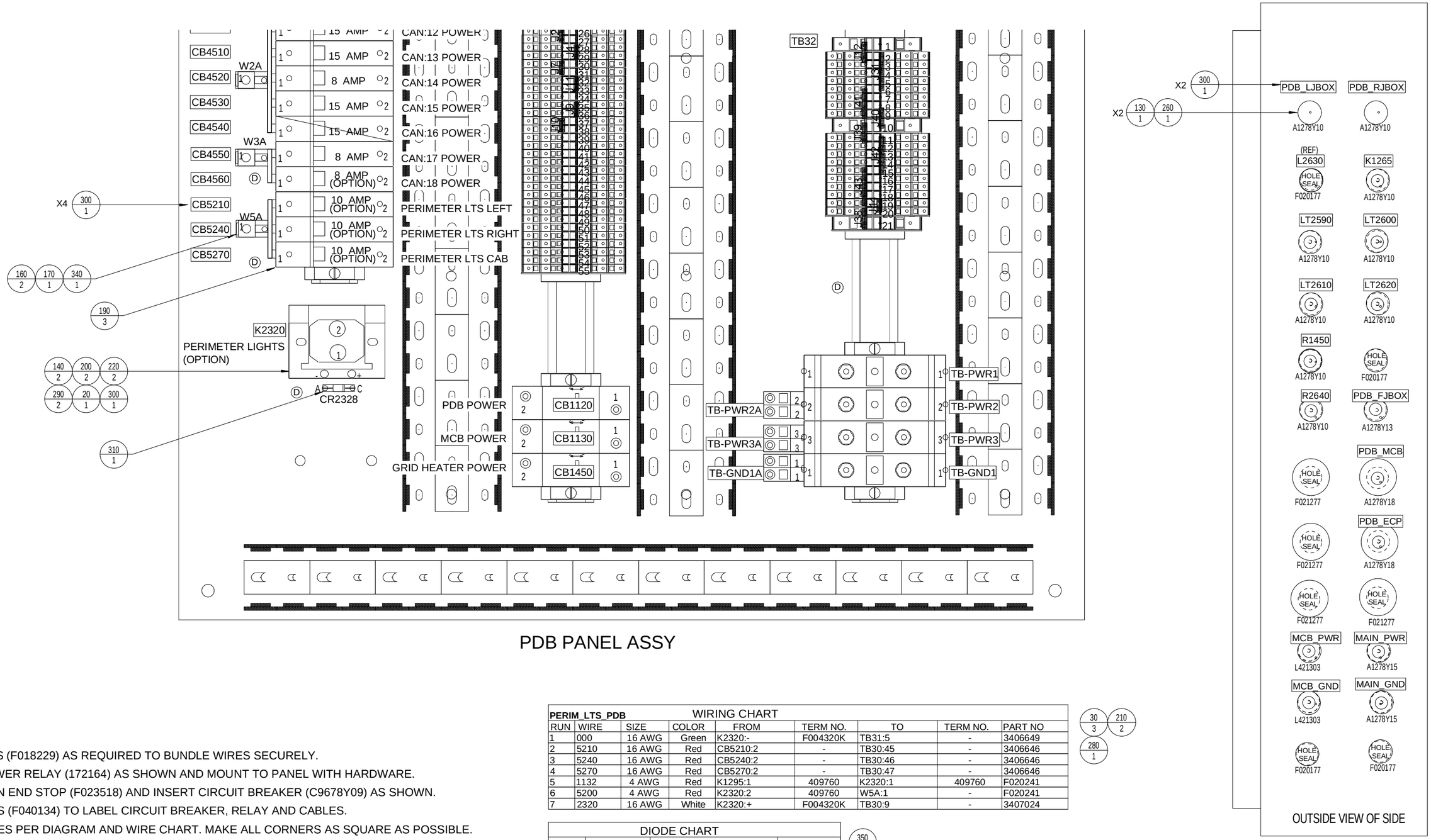

PDB PANEL ASSY

RIGHT

NOTES:

1. USE TYRAPS (F018229) AS REQUIRED TO BUNDLE WIRES SECURELY.
2. INSERT POWER RELAY (172164) AS SHOWN AND MOUNT TO PANEL WITH HARDWARE.
3. MOVE DOWN END STOP (F023518) AND INSERT CIRCUIT BREAKER (C9678Y09) AS SHOWN.
4. USE DECALS (F040134) TO LABEL CIRCUIT BREAKER, RELAY AND CABLES.
5. ROUTE WIRES PER DIAGRAM AND WIRE CHART. MAKE ALL CORNERS AS SQUARE AS POSSIBLE.
6. MARK WIRES PER HTT W.I. 18525
7. DO NOT USE FERRULE TERMINALS WITH TERMINAL BLOCKS
8. USE SHRINK TUBING (F021257) TO INSULATE 4AWG TERMINALS (409760)

PERIM_LTS_PDB WIRING CHART

RUN	WIRE	SIZE	COLOR	FROM	TERM NO.	TO	TERM NO.	PART NO
1	000	16 AWG	Green	K2320:-	F004320K	TB31:5	-	3406649
2	5210	16 AWG	Red	CB5210:2	-	TB30:45	-	3406646
3	5240	16 AWG	Red	CB5240:2	-	TB30:46	-	3406646
4	5270	16 AWG	Red	CB5270:2	-	TB30:47	-	3406646
5	1132	4 AWG	Red	K1295:1	409760	K2320:1	409760	F020241
6	5200	4 AWG	Red	K2320:2	409760	W5A:1	-	F020241
7	2320	16 AWG	White	K2320:+	F004320K	TB30:9	-	3407024

30 3 — 210 2 — 280 1

DIODE CHART

RUN	DEVICE	FROM	TO	PART NO.
1	CR2328	K2320:+	K2320:-	F040174

350 2

CONFIDENTIAL

©COPYRIGHT 2011 HARSCO. THIS DRAWING OR DOCUMENT IS THE PROPERTY OF HARSCO AND EMBODIES CONFIDENTIAL INFORMATION, TRADE SECRET INFORMATION, AND/OR KNOW-HOW THAT IS THE PROPERTY OF HARSCO. BY ACCEPTING THIS DRAWING OR DOCUMENT, THE RECIPIENT AGREES (1) NOT TO PROVIDE, OR OTHERWISE MAKE AVAILABLE, THE DRAWING OR DOCUMENT, OR ANY INFORMATION OR KNOW-HOW EMBODIED THEREIN, TO ANY THIRD PARTY AND (2) NOT TO REPRODUCE OR USE THE DRAWING OR DOCUMENT TO MANUFACTURE ANY APPARATUS OR DEVICE, WITHOUT THE PRIOR WRITTEN AUTHORIZATION OF HARSCO.

CHANGE #		REVISION	DR	DATE
EC501724	A	NEW RELEASE	CJW	08/11

DRAWING TITLE/DESCRIPTION: KIT, PERIMETER LIGHT, MKIV-HD PDB Assembly Wiring

MACHINE TYPE-MODEL: MARK IV

E3 PROJECT FILE NAME: MARK IV HD_4

SHEET NUMBER: 3

NUMBER OF JUPITER SHEETS: 0

TOTAL NUMBER OF SHEETS: 4

DRAWN BY: CJW

REL. DATE: 08/11

SIZE: D

SCALE:

HARSCO RAIL

E3 DRAWING

5010288

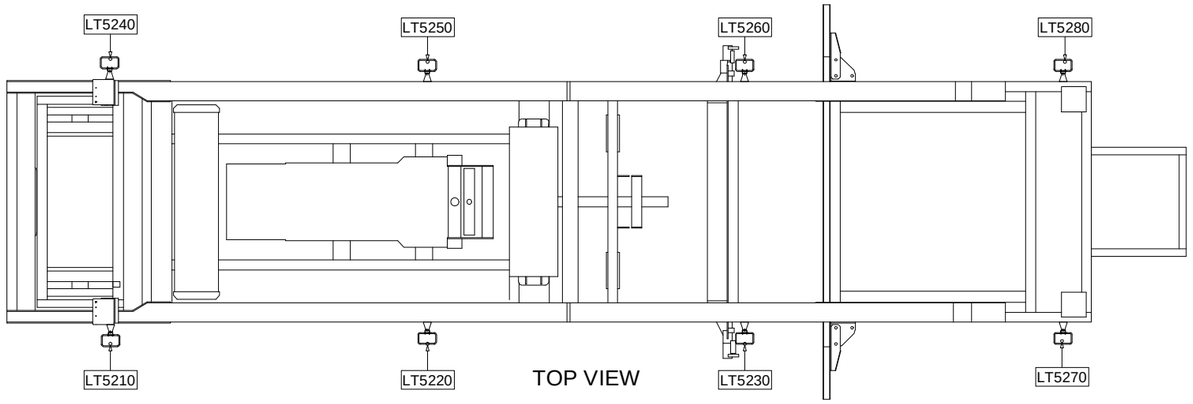

TOP VIEW

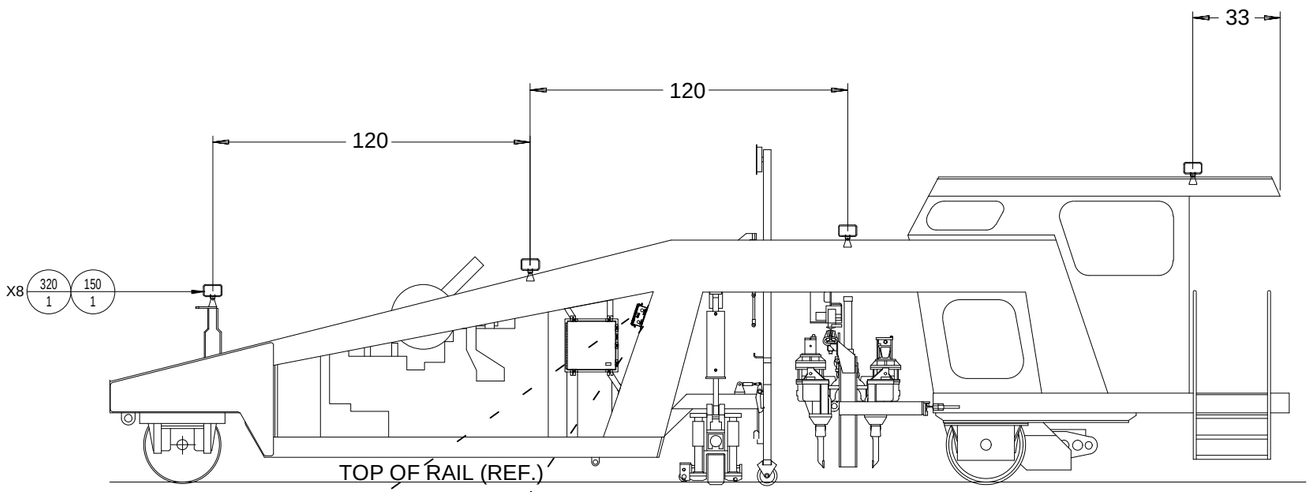

LEFT SIDE VIEW

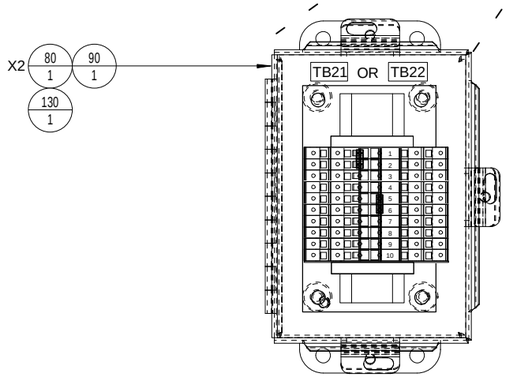

NOTES

1. LABEL LEFT JUNCTION BOX "TB21" AND RIGHT JUNCTION BOX "TB22"
2. MOUNT JUNCTION BOX (4020601) TO MOUNTING PLATE (4021352)
3. WELD LIGHT MOUNTING PLATE (G5510Y01) TO LOCATIONS AS SHOWN ABOVE
4. MOUNT LIGHTS (174288) TO MOUNTING PLATES (G5510Y01)
5. USE BUTT TERMINALS (F009863) TO TERMINATE CABLES TO WIRES FROM LIGHTS
6. USE SHRINK TUBING (151655-1) AS REQUIRED TO INSULATE BUTT TERMINALS
7. DO NOT USE FERRULE TERMINALS WITH TERMINAL BLOCKS
8. RUN CAB LIGHT WIRING THROUGH CORRUGATED CONDUIT (B1623Y01) WHEN EXPOSED

LEFT SIDE LIGHTS

LEFT PERIMETER LTS — PDB_LJBOX — 10FT
LEFT_JBOX — F012388 — PDB

RUN	COLOR	WIRE #	FROM	TERM NO.	TO	TERM NO.
1	BK	000	TB21:5	-	TB31:13	-
2	WH	5210	TB21:1	-	TB30:45	-

250 2 | 70 2 | 240 10

LT FRONT PERIMETER LIGHT — LT5210 — 20FT
LEFT_JBOX — F012388 — OPT PERIM LTS

RUN	COLOR	WIRE #	FROM	TERM NO.	TO	TERM NO.
1	BK	000	TB21:5	-	LT5210:N	F009863
2	WH	5210	TB21:1	-	LT5210:H	F009863

250 2 | 70 2 | 240 20 | 230 2

LT MIDDLE PERIMETER LIGHT — LT5220 — 15FT
LEFT_JBOX — F012388 — OPT PERIM LTS

RUN	COLOR	WIRE #	FROM	TERM NO.	TO	TERM NO.
1	BK	000	TB21:6	-	LT5220:N	F009863
2	WH	5210	TB21:2	-	LT5220:H	F009863

250 2 | 70 2 | 240 15 | 230 2

LT WORKHEAD PERMETER LIGHT — LT5230 — 10FT
LEFT_JBOX — F012388 — OPT PERIM LTS

RUN	COLOR	WIRE #	FROM	TERM NO.	TO	TERM NO.
1	BK	000	TB21:6	-	LT5230:N	F009863
2	WH	5210	TB21:2	-	LT5230:H	F009863

250 2 | 70 2 | 240 10 | 230 2

RIGHT SIDE LIGHTS

RIGHT PERIMETER LTS — PDB_RJBOX — 20FT
RIGHT_JBOX — F012388 — PDB

RUN	COLOR	WIRE #	FROM	TERM NO.	TO	TERM NO.
1	BK	000	TB22:5	-	TB31:14	-
2	WH	5240	TB22:1	-	TB30:46	-

250 2 | 70 2 | 240 20

RT FRONT PERIMETER LIGHT — LT5240 — 20FT
RIGHT_JBOX — F012388 — OPT PERIM LTS

RUN	COLOR	WIRE #	FROM	TERM NO.	TO	TERM NO.
1	BK	000	TB22:5	-	LT5240:N	F009863
2	WH	5240	TB22:1	-	LT5240:H	F009863

250 2 | 70 2 | 240 20 | 230 2

RT MIDDLE PERIMETER LIGHT — LT5250 — 15FT
RIGHT_JBOX — F012388 — OPT PERIM LTS

RUN	COLOR	WIRE #	FROM	TERM NO.	TO	TERM NO.
1	BK	000	TB22:6	-	LT5250:N	F009863
2	WH	5240	TB22:2	-	LT5250:H	F009863

250 2 | 70 2 | 240 15 | 230 2

RT WORKHEAD PERIMETER LIGHT — LT5260 — 10FT
RIGHT_JBOX — F012388 — OPT PERIM LTS

RUN	COLOR	WIRE #	FROM	TERM NO.	TO	TERM NO.
1	BK	000	TB22:6	-	LT5260:N	F009863
2	WH	5240	TB22:2	-	LT5260:H	F009863

250 2 | 70 2 | 240 10 | 230 2

CAB LIGHTS

LT5270 WIRING CHART

RUN	WIRE	SIZE	COLOR	FROM	TERM NO.	TO	TERM NO.	PART NO
1	000	16 AWG	White	LT5270:N	F009863	TB3:16	-	3407024
2	5270	16 AWG	White	LT5270:H	F009863	TB1:31	-	3407024

230 2

LT5280 WIRING CHART

RUN	WIRE	SIZE	COLOR	FROM	TERM NO.	TO	TERM NO.	PART NO
1	000	16 AWG	White	LT5280:N	F009863	TB3:16	-	3407024
2	5270	16 AWG	White	LT5280:H	F009863	TB1:31	-	3407024

230 2

CONFIDENTIAL
©COPYRIGHT 2011 HARSCO. THIS DRAWING OR DOCUMENT IS THE PROPERTY OF HARSCO AND EMBODIES CONFIDENTIAL INFORMATION, TRADE SECRET INFORMATION, AND/OR KNOW-HOW THAT IS THE PROPERTY OF HARSCO. BY ACCEPTING THIS DRAWING OR DOCUMENT, THE RECIPIENT AGREES (1) NOT TO PROVIDE, OR OTHERWISE MAKE AVAILABLE, THE DRAWING OR DOCUMENT, OR ANY INFORMATION OR KNOW-HOW EMBODIED THEREIN, TO ANY THIRD PARTY AND (2) NOT TO REPRODUCE OR USE THE DRAWING OR DOCUMENT TO MANUFACTURE ANY APPARATUS OR DEVICE, WITHOUT THE PRIOR WRITTEN AUTHORIZATION OF HARSCO.

CHANGE #		REVISION	DR	DATE
EC501724	A	NEW RELEASE	CJW	08/11

DRAWING TITLE/DESCRIPTION: KIT, PERIMETER LIGHT, MKIV-HD Interconnect Wiring
MACHINE TYPE-MODEL: MARK IV
E3 PROJECT FILE NAME: MARK IV HD_4

SHEET NUMBER: 4
NUMBER OF JUPITER SHEETS: 0
TOTAL NUMBER OF SHEETS: 4
DRAWN BY: CJW
REL. DATE: 08/11
SIZE: D
SCALE:

HARSCO RAIL
E3 DRAWING
5010288

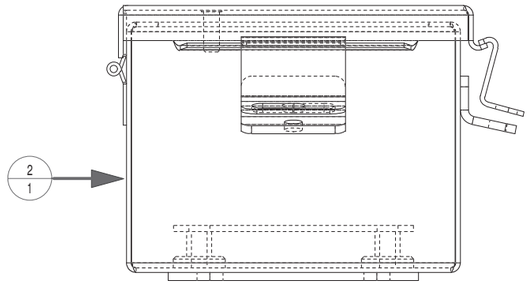

PRODUCT STRUCTURE				
ITEM	QTY	PART #	PART DESCRIPTION	
1	1	405596	DIN RAIL	: 4.5" DIN RAIL
2	1	0-3223007-0-05	ENCLOSURE	: 4X6X3 NEMA 4 ENCLOSURE
3	8	4011819	TERMINAL BLOCK	: WAGO TOP JOB TERMINAL BLOCK 18-10 AWG
4	1	4011820	END PLATE	: TERMINAL BLOCK END PLATE
5	2	4011821	JUMPER	: TERMINAL BLOCK 2-PRONG JUMPER
6	2	F041270	END STOP	: END STOP FOR ALL DIN RAIL
C 7	3	A1278Y10	CABLE GRIP	: CABLE FROM: 0.300-0.400" 1/2" NPT 90 DEG
B 8			DELETE	
9	8	4016767	DECAL	: TERMINAL BLOCK MARKER STRIP
C 10	1	A1278Y14	CABLE GRIP	: CABLE GRIP FOR .375 -.438, 1/2 NPT
C 11	4	F019878	LOCK NUT	: 1/2" NUT

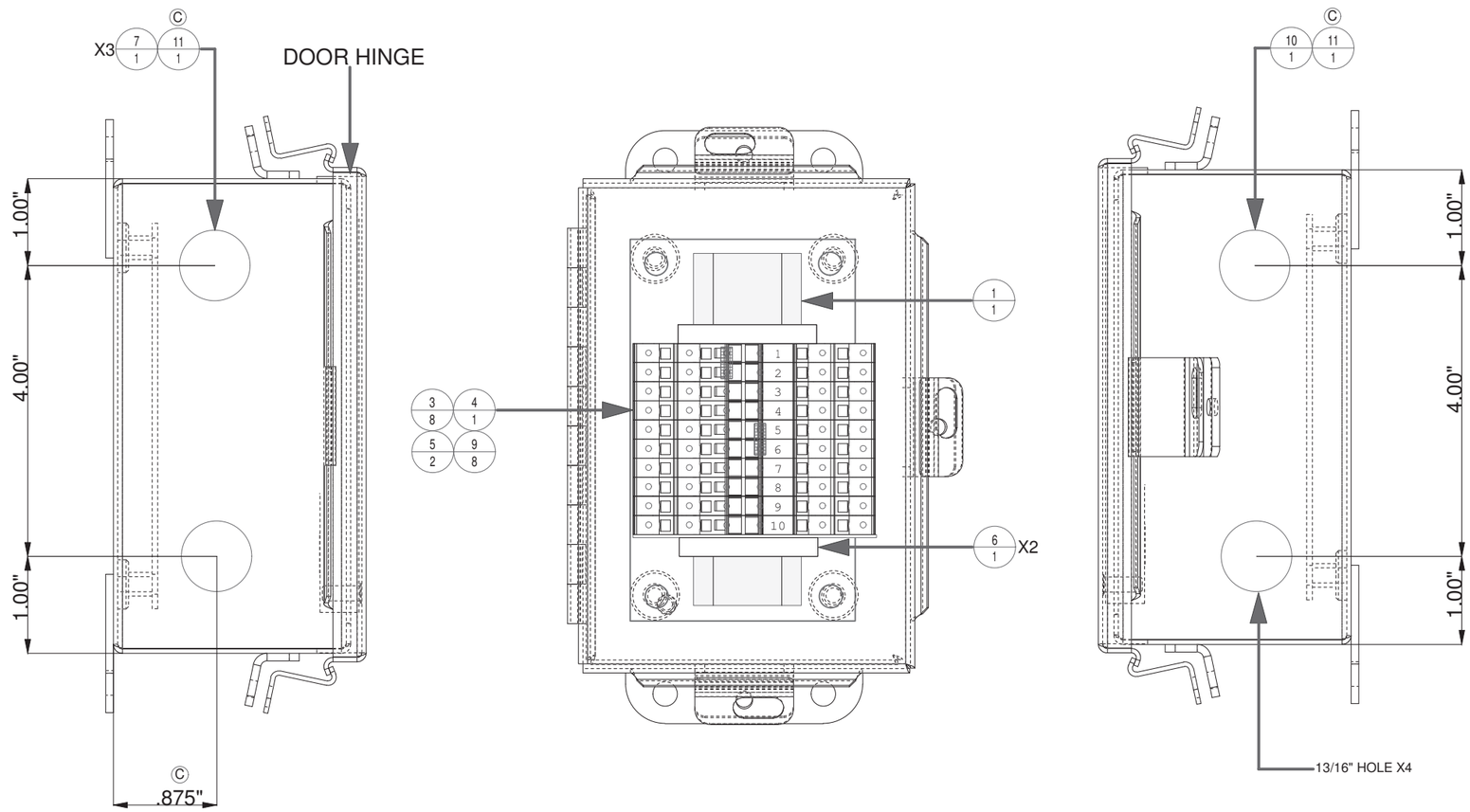

JUMPER CHART			
RUN	FROM	TO	PART NO.
1	TB1	TB2	4011821
2	TB5	TB6	4011821

NOTES

1. USE WAGO PEN TO MARK 4016767 DECAL PER DRAWING. APPLY AS SHOWN.
2. COVER NOT SHOWN IN ALL VIEWS FOR CLARITY.
3. APPLY TERMINALS USING RATCHET TYPE CRIMP TOOL.
4. PLACE FOUR 1/2" NPT HOLES IN SIDES OF ENCLOSURE AS SHOWN.
5. IF NEEDED, USE HOLE SEAL, F020177 TO SEAL ANY UNUSED HOLES IN ENCLOSURE.

CONFIDENTIAL

©COPYRIGHT 2010 HARSCO. THIS DRAWING OR DOCUMENT IS THE PROPERTY OF HARSCO AND EMBODIES CONFIDENTIAL INFORMATION, TRADE SECRET INFORMATION, AND/OR KNOW-HOW THAT IS THE PROPERTY OF HARSCO. BY ACCEPTING THIS DRAWING OR DOCUMENT, THE RECIPIENT AGREES (1) NOT TO PROVIDE, OR OTHERWISE MAKE AVAILABLE, THE DRAWING OR DOCUMENT, OR ANY INFORMATION OR KNOW-HOW EMBODIED THEREIN, TO ANY THIRD PARTY AND (2) NOT TO REPRODUCE OR USE THE DRAWING OR DOCUMENT TO MANUFACTURE ANY APPARATUS OR DEVICE, WITHOUT THE PRIOR WRITTEN AUTHORIZATION OF HARSCO.

CHANGE #		DATE
102523	A	02/09 DWJ
105640	B	05/10 DWJ
106168	C	08/10 DWJ

DRAWING TITLE/DESCRIPTION:
LIGHT JUNCTION BOX
Bill Of Material

MACHINE TYPE-MODEL:
MARK IV

E3 PROJECT FILE NAME:
4020601

SHEET NUMBER: 1
NUMBER OF JUPITER SHEETS: 0
TOTAL NUMBER OF SHEETS: 1

DRAWN BY: DWJ
REL. DATE:
SIZE: D
SCALE:

HARSCO RAIL

E3 DRAWING
4020601

ENG.DWG.NO.
D1139WAD

REVISIONS							
NO	ER	DESCRIPTION	ZONE	DR	CK	APP	MF
*	12548.31	NEW RELEASE		PJG			
A	13173.1	ADDED ADDITIONAL ITS-6 & 17, ADDED ITEMS 21-27		CJW	JBR	JBR	

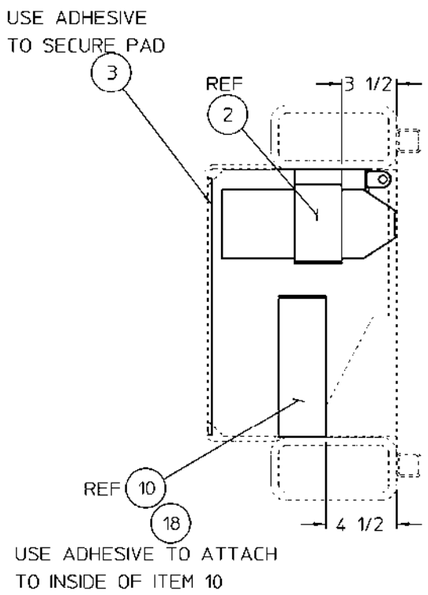

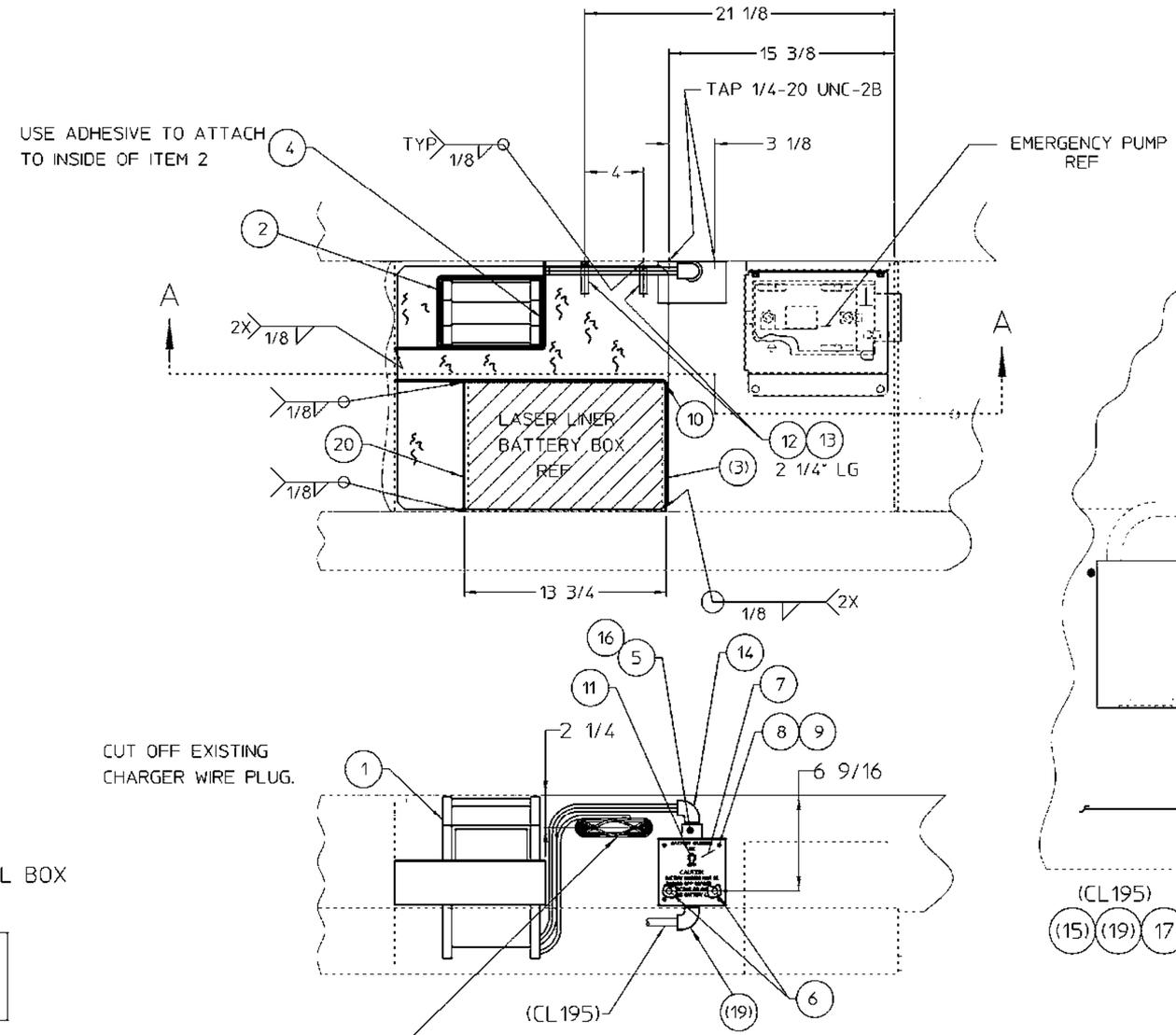

VIEW "A-A"

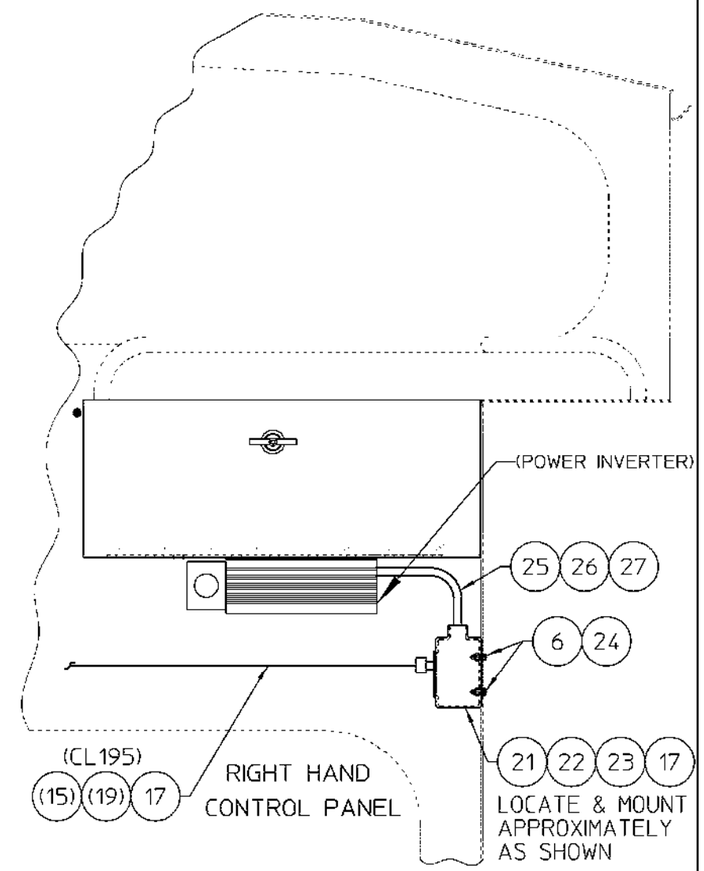

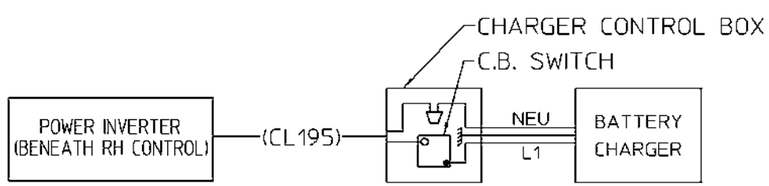

CABLE DIAGRAM

CABLE CONSTRUCTION CHART							
		BOX END		DEVICE END		CABLE	
CABLE NO.	WIRE NOS.	ITEM(QTY)	OUTER INSL STRIP (INCHES)	ITEM(QTY)	OUTER INSL STRIP (INCHES)	ITEM (QTY) (FEET)	CABLE P/N
CL195	L1, NEU, GRD	19 (1)	2	N/A	N/A	15 (50)	D1139WADCL195

SEE SEPARATE PARTS LIST

FIG NO.	ITEM NO.	PART NUMBER	DESCRIPTION AND MATERIAL SIZE (REF.ONLY)	QTY

IMPLIED TOLERANCES
ALL DIMENSIONS ARE IN INCHES-TOLERANCE UNLESS OTHERWISE SPECIFIED

NOMINAL SIZE RANGE		PLUS OR MINUS			NOMINAL SIZE RANGE		PLUS OR MINUS		
OVER	TO	FRACTION	2 PLACE DECIMAL	3 PLACE DECIMAL	OVER	TO	FRACTION	2 PLACE DECIMAL	3 PLACE DECIMAL
-	1	1/64	.01	.003	6	24	3/64	.03	.008
1	6	1/32	.02	.005	24	-	1/16	.05	.010

ANGULAR DIMENSIONS PLUS OR MINUS 1 DEGREE
ALL MACHINED SURFACES TO HAVE A SURFACE FINISH OF 125 MICROINCHES UNLESS OTHERWISE SPECIFIED.

WELDING SPECIFICATION
UNLESS OTHERWISE SPECIFIED ALL WELDS SHOULD ADHERE TO FAIRMONT TAMPER WELDING SPECIFICATION NO. 101

WEIGHT LBS.
3rd ANGLE PROJECTION
DO NOT SCALE
SHEET 1 CONT. ON —

DESCRIPTION 124
LASER BATTERY CHARGER

DRAWN PJG	DATE 12-05-02	MACHINE TYPE MK IV JUPITER	
CHECKED JBR	DATE 12-10-02	Fairmont Tamper 2401 Edmund Road-Box 20 Cayce-West Columbia, South Carolina 29171-0020 (803) 822-9160	
APP-ENG JBR	DATE 12-10-02		
APP-MFG	DATE		
LAST ECR. 13173 .1	CHECKED dvan	ENG.DWG.NO. D1139WAD	
	DATE 22-Sep-05		

THIS DOCUMENT CONTAINS PROPRIETARY INFORMATION AND SUCH INFORMATION MAY NOT BE DISCLOSED TO OTHERS FOR ANY PURPOSE OR USED FOR MANUFACTURING PURPOSES WITHOUT THE WRITTEN PERMISSION OF FAIRMONT TAMPER.

PARTS LIST

ASSEMBLY IDENTIFIER

ITEM NO	PART NUMBER	DESCRIPTION	QUANTITY
1	A8341Y01	BATTERY CHARGER	1
2	D1100YAA	CHARGER BRKT WLDMT	1
3	D8007Y03	ISOLATION MAT	1
4	D1119Y01	SAFETY PAD	1
5	A8385Y01	SWITCH BOX	1
6	A0036003	1/4-20 X 3/4 HHCS	4
7	A8343Y01	N/P BATTERY CHARGER	1
8	A0050039	8-32 X 1/2 PL RD HD MS	4
9	A0061005	8 PLATED LOCK WASHER	4
10	D1129X01	BATTERY RETAINER BRKT	1
11	0-3105013-0-06	CIRCUIT BREAKER (15 AMP)	1
12	A0220T41	RD BAR Ø 1/4 x 2 1/4	2
13	L423094	1/4" LOW PRESS HOSE (FT)	0.4
14	L424087	STRAIN RELIEF 90 DEG	1
15	L411090	CABLE, 16/3 (FT)	60
16	L40835	SET SCREW CONNECTOR	1
17	0-3231005-0-10	CABLE PLUG	2
18	D8006Y01	BUMPER PAD	1
19	A1278Y10	STRAIN RELIEF 90 DEG	2
20	G8862Y01	RETAINER BAR	1
21	Z690720	FITTING BOX	1
22	0-3236009-0-01	RECEPTACLE DUPLEX	1
23	C6654Y03	RECEPTACLE PLATE	1
24	L41157	1/4-20 ESNA NUT	2
25	L422002	CABLE, 14/3 (FT)	1
26	L424107	3/4 IN ST STRAIN RELIEF	1
27	A1278Y14	STRAIN RELIEF 90 DEG	1

REVISIONS

NO	ER	DESCRIPTION	DR	CK	APP	MF
*	12548.31	NEW RELEASE	PJG			
A	13173.1	IT-6 QTY WAS 2; IT-17 QTY WAS 1; ADDED ITEMS 21-27	CJW	JBR	JBR	

ASSEMBLY DESCRIPTION

ER
DR
CK
APP
MF

Fairmont Tamper™
2401 Edmund Road-Box 20
Cayce-West Columbia,
South Carolina 29171-0020
(803) 822-9160

DWG NO D1139WAD
SHEET 1
CONT ON –
DESCRIPTION (24) LASER BATTERY CHARGER
DRAWN PJG
DATE 12-05-02
CHECKED JBR
DATE 12-10-02
APP JBR
DATE 12-10-02
APP
DATE

SHEET 1
CONT ON –
LAST ECR 13173
.1
CHECKED dvan
DATE 22-Sep-05
DWG NO D1139WAD

MISCELLANEOUS COMPONENTS

SAFETY LABEL KIT, H1271PAA, IDENTIFICATION ITEMS AND QUANTITIES FOR THIS SHEET

SHOWN 4X

ITEM 1	ITEM 3	ITEM 4	ITEM 7	ITEM 13	ITEM 14	ITEM 16	ITEM 17	ITEM 18	ITEM 19	ITEM 20	ITEM 22	ITEM 23
QTY 1	QTY 2	QTY 2	QTY 1	QTY 1	QTY 1	QTY 2	QTY 5	QTY 1	QTY 1	QTY 1	QTY 5	QTY 1

33

51 SEE NOTE 11

STENCIL / DECAL KIT, H1330PAZ, IDENTIFICATION ITEMS AND QUANTITIES FOR THIS SHEET

SHOWN 4X

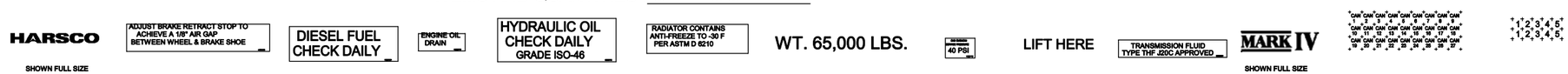

SHOWN FULL SIZE

SHOWN FULL SIZE

ITEM 35	ITEM 37	ITEM 38	ITEM 39	ITEM 40	ITEM 41	ITEM 42	ITEM 44	ITEM 45	ITEM 46	ITEM 47	ITEM 51	ITEM 54
QTY 1	QTY 2	QTY 1	QTY 1	QTY 1	QTY 1	QTY 1	QTY 2	QTY 2	QTY 1	QTY 1	QTY 1	QTY 1

58

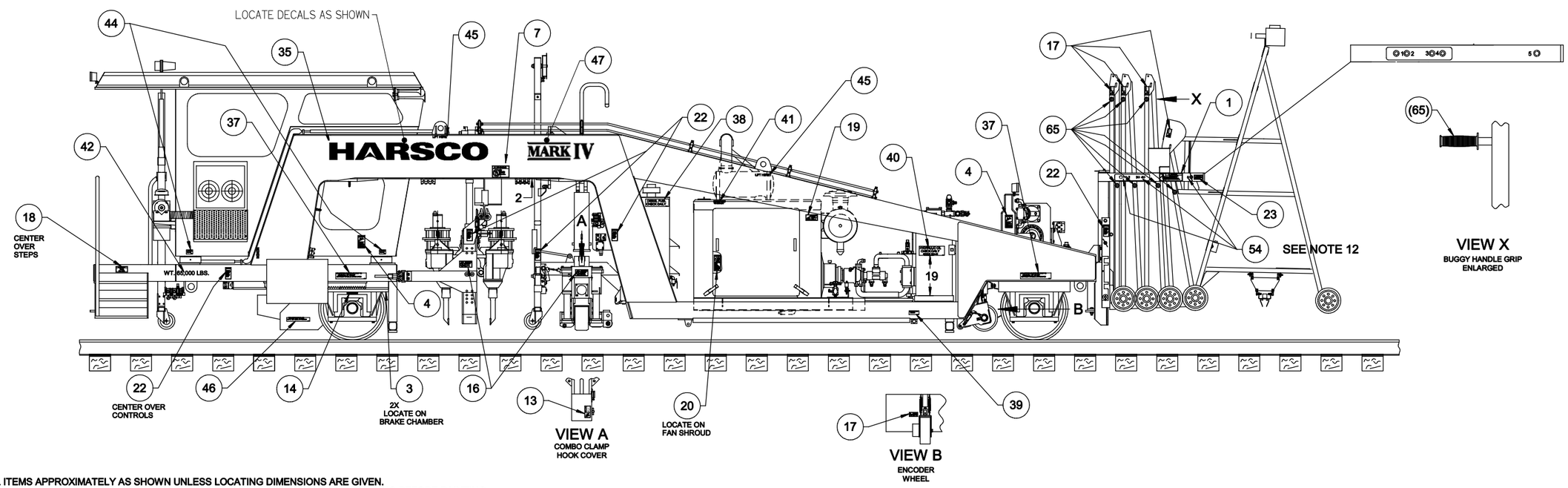

NOTES:

1. LOCATE ALL ITEMS APPROXIMATELY AS SHOWN UNLESS LOCATING DIMENSIONS ARE GIVEN.
2. MASK ALL HOSES, CABLES, CHROME, AIR DRYER, WINDOWS, MOLDINGS & WEATHERSTRIPPING BEFORE PAINTING.
3. PAINT ENTIRE MACHINE YELLOW, L421507, EXCEPT WHERE INDICATED.
4. PAINT GLOSS BLACK, L421518, THE FOLLOWING: TOWING EYES, STEPS, HANDRAILS, WHEELS, TIE DOWN LUGS, LIFTING LUGS, & JACKING PADS WHEN USED.
5. PAINT FLAT BLACK, L421506, THE FOLLOWING: SHADOWBOARD, MUFFLER & TAIL PIPES.
6. PAINT BLUE, L421524, HYDRAULIC TANK COVERS.
7. PAINT GREEN, L422902, FUEL TANK COVERS.
8. PAINT RED, L421523, THE FOLLOWING: W/H LOCKING LEVER, ALL SAFETY HOOKS & PINS, ON BUGGY LIFT SYSTEM - HOOKS, PINS & RINGS, PUSHER BUGGY FOLDING JOINTS (12" EACH JOINT), ALL SLIDING AXLE TOOTH RACKS, & THE COMBO CLAMP BUMPER BOLTS & PADS.
9. PAINT NON-SKID BLACK, A4776Y01, THE FOLLOWING: BATTERY BOX LID & (3) TOOL BOX LIDS, REAR STEPS AND PLATFORM.
10. PAINT WHITE, 0-3041003-0-54, CAB ROOF.
11. IT-51, JUPITER CAN NUMBER DECALS, SEE THE GENERAL ELEC DWG FOR ALL LOCATIONS & SCRAP ANY NUMBERS NOT USED.
12. IT-54, LOCK PIN NUMERS, USE 1 SET HERE ON SHT 1 AND THE OTHER ON SHT 3 AS SHOWN.

DO NOT PLACE CAN NUMBERS ON CANS.

CONFIDENTIAL

© COPYRIGHT 2001 HARSCO TRACK TECHNOLOGIES. THIS DRAWING OR DOCUMENT IS THE PROPERTY OF HARSCO TRACK TECHNOLOGIES AND EMBODIES CONFIDENTIAL INFORMATION, TRADE SECRET INFORMATION, AND/OR KNOW-HOW THAT IS THE PROPERTY OF HARSCO TRACK TECHNOLOGIES. BY ACCEPTING THIS DRAWING OR DOCUMENT, THE RECIPIENT AGREES (1) NOT TO PROVIDE, OR OTHERWISE MAKE AVAILABLE, THE DRAWING OR DOCUMENT, OR ANY INFORMATION OR KNOW-HOW EMBODIED THEREIN, TO ANY THIRD PARTY AND (2) NOT TO REPRODUCE OR USE THE DRAWING OR DOCUMENT TO MANUFACTURE ANY APPARATUS OR DEVICE, WITHOUT THE PRIOR WRITTEN AUTHORIZATION OF HARSCO TRACK TECHNOLOGIES.

SOLID EDGE DRAWING

IMPLIED TOLERANCES

ALL DIMENSIONS ARE IN INCHES - TOLERANCE UNLESS OTHERWISE SPECIFIED

NOMINAL SIZE RANGE OVER	TO	HIGH PLUS OR MINUS 2 PLACE DECIMAL	3 PLACE DECIMAL	METRIC PLUS OR MINUS 1 PLACE DECIMAL	2 PLACE DECIMAL
0	6	.03	.005	0 150	.8	.13
6	24	.04	.008	150 600	1.0	.20
24	-	.06	.010	- 600	1.5	.25

UNLESS OTHERWISE SPECIFIED ALL MACHINED SURFACES WILL HAVE:

A SURFACE FINISH OF 125 MICROINCHES

ANGULAR TOLERANCE OF .50°

CONCENTRICITY WITHIN .010

THIRD ANGLE PROJECTION

UNLESS OTHERWISE SPECIFIED ALL WELDS SHOULD ADHERE TO THE LATEST HTT WELDING SPECIFICATION 101

CHANGE	R/L	REVISION	DATE
131734	A	RELEASE	2-26-07
100558	B	ADDED IT-54	10-07-08
101462	C	DELETED REFERNCE IT - 50 WAS H3588X01	03-12-08
102613	D	ITEMS 35, 36, 59 LOGO UPDATED	03-10-09
102808	E	ITEM 35 WAS H3911X01	6-10-09
105280	F	ITEM 34 WAS HI279Y02, IT-47 WAS HI279Y01, IT-64 WAS D4486Y12	02-16-10

Description: LOGO INSTALLATION

Drawing Number: ----------

Model: H1270WAG.dft

Weight: _____

Mat'l: _____

Scale: 1:4

Machine Type: LOGO INSTALLATION

Drawn: mflaming

Date Drawn: 03-12-08

APVD Dwg: HW

APVD Chkg: JBR

HTT
Harsco Track Technologies
Harsco
Columbia, SC

Part Number: H1270WAG

Size: D

Sheet: 1 of 4

Plotted by shuffstetler on 9/9/2010 HI270WAG.dft

SAFETY LABEL KIT, H1271PAA, IDENTIFICATION ITEMS AND QUANTITIES FOR THIS SHEET — SHOWN 4X

33

ITEM 1	ITEM 4	ITEM 5	ITEM 6	ITEM 7	ITEM 13	ITEM 14	ITEM 16	ITEM 17	ITEM 18	ITEM 19	ITEM 20	ITEM 21	ITEM 22
QTY 1	QTY 2	QTY 1	QTY 1	QTY 1	QTY 1	QTY 1	QTY 2	QTY 4	QTY 5	QTY 1	QTY 1	QTY 1	QTY 2

STENCIL / DECAL KIT, H1330PAZ, IDENTIFICATION ITEMS AND QUANTITIES FOR THIS SHEET — SHOWN 4X

58

ITEM 35	ITEM 37	ITEM 40	ITEM 41	ITEM 42	ITEM 43	ITEM 44	ITEM 45	ITEM 46	ITEM 47	ITEM 53
QTY 1	QTY 2	QTY 1	QTY 1	QTY 1	QTY 1	QTY 2	QTY 2	QTY 1	QTY 1	QTY 1

HARSCO (SHOWN FULL SIZE) — ADJUST BRAKE RETRACT STOP TO ACHIEVE A 1/8" AIR GAP BETWEEN WHEEL & BRAKE SHOE — HYDRAULIC OIL CHECK DAILY GRADE ISO-46 — RADIATOR CONTAINS ANTI-FREEZE TO -30 F PER ASTM D 6210 — WT. 65,000 LBS. — 40 PSI — LIFT HERE — TRANSMISSION FLUID TYPE THF J20C APPROVED — MARK IV (SHOWN FULL SIZE)

NOTES:
2.1 LOCATE ALL ITEMS APPROXIMATELY AS SHOWN UNLESS LOCATING DIMENSIONS ARE GIVEN.

NAMEPLATE ID SHOWN 4X

ITEM 59
QTY 1

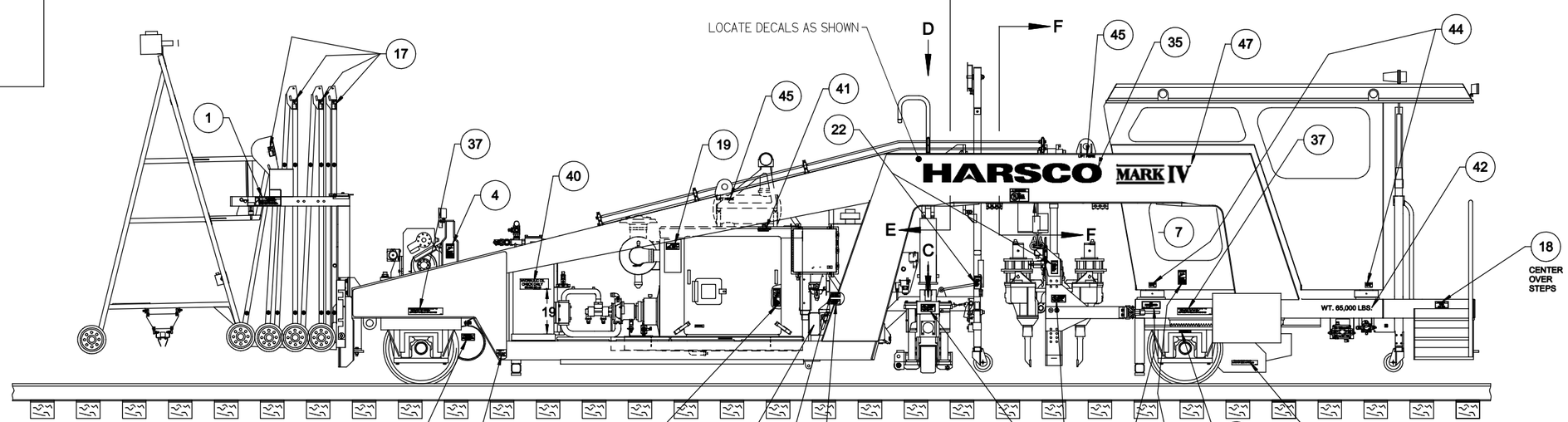

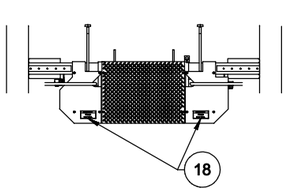

VIEW D
VALVE COVERS ROTATED 90°

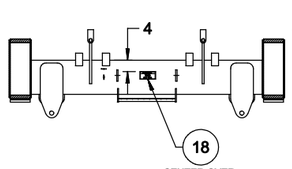

SECTION E-E
JACK BEAM

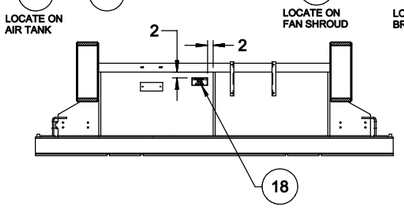

SECTION F-F
TRAVERSE BEAM

SOLID EDGE DRAWING

CONFIDENTIAL
© COPYRIGHT 2001 HARSCO TRACK TECHNOLOGIES. THIS DRAWING OR DOCUMENT IS THE PROPERTY OF HARSCO TRACK TECHNOLOGIES AND EMBODIES CONFIDENTIAL INFORMATION, TRADE SECRET INFORMATION, AND/OR KNOW-HOW THAT IS THE PROPERTY OF HARSCO TRACK TECHNOLOGIES. BY ACCEPTING THIS DRAWING OR DOCUMENT, THE RECIPIENT AGREES (1) NOT TO PROVIDE, OR OTHERWISE MAKE AVAILABLE, THE DRAWING OR DOCUMENT, OR ANY INFORMATION OR KNOW-HOW EMBODIED THEREIN, TO ANY THIRD PARTY AND (2) NOT TO REPRODUCE OR USE THE DRAWING OR DOCUMENT TO MANUFACTURE ANY APPARATUS OR DEVICE, WITHOUT THE PRIOR WRITTEN AUTHORIZATION OF HARSCO TRACK TECHNOLOGIES.

IMPLIED TOLERANCES
ALL DIMENSIONS ARE IN INCHES - TOLERANCE UNLESS OTHERWISE SPECIFIED

INCH NOMINAL SIZE RANGE OVER	TO	2 PLACE DECIMAL	3 PLACE DECIMAL
0	6	.03	.005
6	24	.04	.008
24	-	.06	.010

METRIC NOMINAL SIZE RANGE OVER	TO	1 PLACE DECIMAL	2 PLACE DECIMAL
0	150	.8	.13
150	600	1.0	.20
-	600	1.5	.25

PLUS OR MINUS

UNLESS OTHERWISE SPECIFIED ALL MACHINED SURFACES WILL HAVE A SURFACE FINISH OF 125 MICRONCHES ANGULAR TOLERANCE OF ±.50° CONCENTRICITY WITHIN .010

THIRD ANGLE PROJECTION

UNLESS OTHERWISE SPECIFIED ALL WELDS SHOULD ADHERE TO THE LATEST HTT WELD-ING SPECIFICATION 101

CHANGE	R/L	REVISION	DATE
131734	A	RELEASE	2-26-07
100558	B	ADDED IT-54	10-07-08
101462	C	DELETED REFERNCE IT - 50 WAS H3588X01	03-12-08
102613	D	ITEMS 35, 36, 59 LOGO UPDATED	03-10-09
102808	E	ITEM 35 WAS H3911X01	6-10-09
105280	F	ITEM 34 WAS H1279Y02, IT-47 WAS H1279Y01, IT-64 WAS D4486Y12	02-16-10

Description: LOGO INSTALLATION
Drawing Number: ———
Machine Type: LOGO INSTALLATION
Model: H1270WAG.dft
Weight: ———
Scale: 1:4
Drawn: mfleming
Date Drawn: 03-12-08
APVD Dwg: HW
APVD CtDbg: JBR
Mat'l: ———

HTT
Harsco Track Technologies
Harsco
Columbia, SC

Part Number: H1270WAG
Size: D
Sheet: 2 of 4

Plotted by shuffstetler on 9/9/2010 H1270WAG.dft

NAMEPLATE IDENTIFICATION SHOWN 4X
ITEMS AND QUANTITIES FOR THIS SHEET

ITEM 60
QTY 1

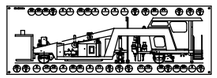
ITEM 61
QTY 1

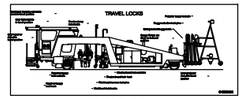

ITEM 62
QTY 1

ITEM 63
QTY 1

ITEM 64
QTY 1

ITEM 66
QTY 1

SAFETY LABEL KIT, H1271PAA, IDENTIFICATION SHOWN 4X
ITEMS AND QUANTITIES FOR THIS SHEET

ITEM 2	ITEM 3	ITEM 8	ITEM 9	ITEM 10	ITEM 11	ITEM 12	ITEM 15	ITEM 17	ITEM 18	ITEM 23
QTY 3	QTY 2	QTY 1	QTY 1	QTY 1	QTY 3	QTY 2	QTY 1	QTY 2	QTY 3	QTY 1

33

STENCIL / DECAL KIT, H1330PAZ, IDENTIFICATION SHOWN 4X
ITEMS AND QUANTITIES FOR THIS SHEET

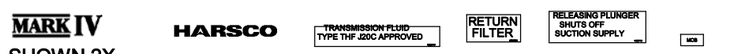

SHOWN 2X					
ITEM 34	ITEM 36	ITEM 46	ITEM 48	ITEM 49	ITEM 52
QTY 2	QTY 1	QTY 1	QTY 2	QTY 2	QTY 1

58

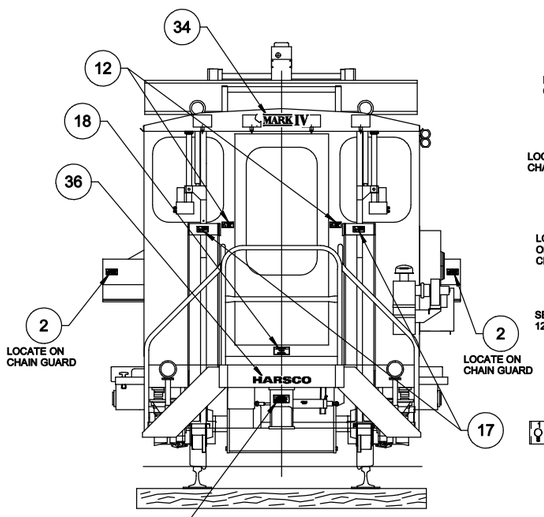

REAR VIEW

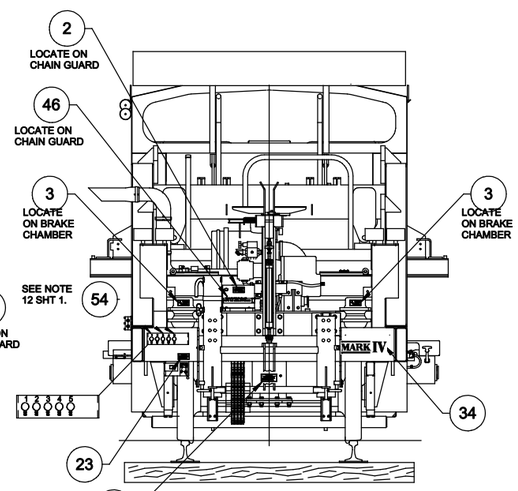

FRONT VIEW

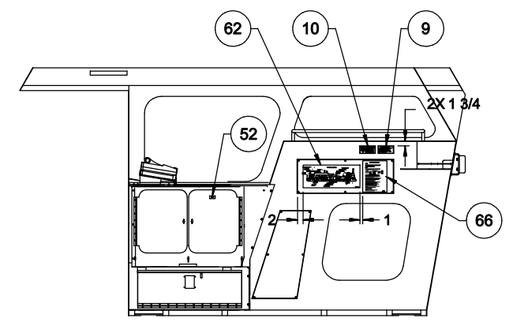

INSIDE OF CAB
LEFT SIDE

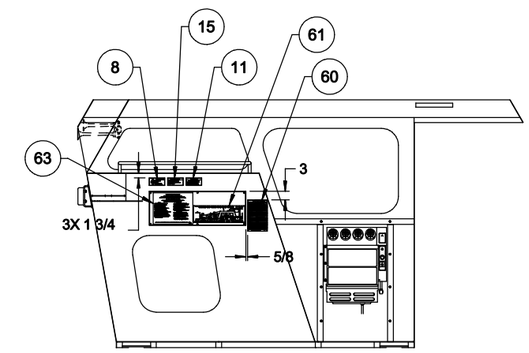

INSIDE OF CAB
RIGHT SIDE

NOTES:
3.1 LOCATE ALL ITEMS APPROXIMATELY AS SHOWN UNLESS LOCATING DIMENSIONS ARE GIVEN.

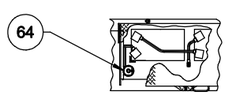

BATTERY BOX
TOP VIEW

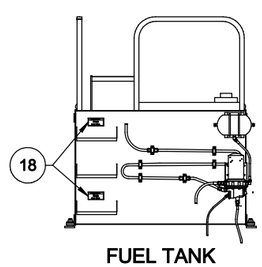

FUEL TANK
FRONT VIEW

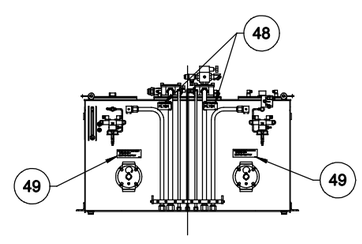

HYDRAULIC TANK
REAR VIEW

CONFIDENTIAL
© COPYRIGHT 2001 HARSCO TRACK TECHNOLOGIES. THIS DRAWING OR DOCUMENT IS THE PROPERTY OF HARSCO TRACK TECHNOLOGIES AND EMBODIES CONFIDENTIAL INFORMATION, TRADE SECRET INFORMATION, AND/OR KNOW-HOW THAT IS THE PROPERTY OF HARSCO TRACK TECHNOLOGIES. BY ACCEPTING THIS DRAWING OR DOCUMENT, THE RECIPIENT AGREES (1) NOT TO PROVIDE, OR OTHERWISE MAKE AVAILABLE, THE DRAWING OR DOCUMENT, OR ANY INFORMATION OR KNOW-HOW EMBODIED THEREIN, TO ANY THIRD PARTY AND (2) NOT TO REPRODUCE OR USE THE DRAWING OR DOCUMENT TO MANUFACTURE ANY APPARATUS OR DEVICE, WITHOUT THE PRIOR WRITTEN AUTHORIZATION OF HARSCO TRACK TECHNOLOGIES.

SOLID EDGE DRAWING

IMPLIED TOLERANCES
ALL DIMENSIONS ARE IN INCHES - TOLERANCE UNLESS OTHERWISE SPECIFIED

NOMINAL SIZE RANGE		INCH PLUS OR MINUS		NOMINAL SIZE RANGE		METRIC PLUS OR MINUS	
OVER	TO	2 PLACE DECIMAL	3 PLACE DECIMAL	OVER	TO	1 PLACE DECIMAL	2 PLACE DECIMAL
0	6	.03	.005	0	150	.8	.13
6	24	.04	.008	150	600	1.0	.20
24	-	.06	.010	-	600	1.5	.25

UNLESS OTHERWISE SPECIFIED ALL MACHINED SURFACES WILL HAVE:
A SURFACE FINISH OF 125 MICROINCHES
ANGULAR TOLERANCE OF ± .50°
CONCENTRICITY WITHIN .010

THIRD ANGLE PROJECTION

UNLESS OTHERWISE SPECIFIED ALL WELDS SHOULD ADHERE TO THE LATEST HTT WELDING SPECIFICATION 101

CHANGE	R/L	REVISION	DATE
131734	A	RELEASE	2-26-07
100558	B	ADDED IT-54	10-07-05
101462	C	DELETED REFERNCE IT - 50 WAS H3588X01	03-12-08
102613	D	ITEMS 35, 36, 59 LOGO UPDATED	03-10-09
102808	E	ITEM 35 WAS H3911X01	6-10-09
105280	F	ITEM 34 WAS H1279Y02, IT-47 WAS H1279Y01, IT-64 WAS D4486Y12	02-16-10

Description: LOGO INSTALLATION
Drawing Number: ----------
Machine Type: LOGO INSTALLATION
Model: H1270WAG.dft
Drawn: mfleming
Date Drawn: 03-12-08
Weight: ------
Scale: 1:4
APVD Dwg: HW
APVD Chkg: JBR
Mat'l: ----------

HTT
Harsco Track Technologies
Harsco
Columbia, SC

Part Number: H1270WAG
Size: D
Sheet: 3 of 4

Plotted by shuffstetler on 9/9/2010 H1270WAG.dft

ITEM NO	PART NUMBER	DESCRIPTION	QUANTITY	
1	H1272Y01	BUGGY SAFETY LABEL	REF	
2	H1272Y02	CHAIN SAFETY LABEL	REF	
3	H1272Y03	BK SPRING SAFETY LABEL	REF	
4	H1272Y04	HYD OIL SAFETY LABEL	REF	
5	H1272Y05	DRYER SAFETY LABEL	REF	
6	H1272Y06	PURGE TANK SAFETY LABEL	REF	
7	H1272Y07	KEEP BACK SAFETY LABEL	REF	
8	H1272Y08	SEAT BELT SAFETY LABEL	REF	
9	H1272Y09	PERSONNEL SAFETY LABEL	REF	
10	H1272Y10	READ MANUAL SAFETY LABEL	REF	
11	H1272Y11	TOWING SAFETY LABEL	REF	
12	H1272Y12	REC BUGGY SAFETY LABEL	REF	
13	H1272Y13	CRUSH HAZ. SAFETY LABEL	REF	
14	H1272Y14	CRUSH HAZ. SAFETY LABEL	REF	
15	H1272Y15	PARK BRAKE SAFETY LABEL	REF	
16	A8308Y01	ADJUST WARNING DECAL	REF	
17	D2338Y01	DECAL CAUTION PINCH PT	REF	
18	D2340Y01	DECAL CAUTION WATCH ST	REF	
19	D2341Y01	DECAL DANGER HOT	REF	
20	D2348X01	DECAL FAN	REF	
21	D2349Y01	DECAL CAUTION AIR PRESS	REF	
22	D2350Y01	DECAL CAUTION LOCK PINS	REF	
23	D2502Y01	FORK LIFT CAUTION LABEL	REF	
24	BLANK			
25	BLANK			
26	BLANK			
27	BLANK			
28	BLANK			
29	BLANK			
30	BLANK			
31	BLANK			
32	BLANK			
33	H1271PAA	SAFETY LABEL KIT	1	

ITEM NO	PART NUMBER	DESCRIPTION	QUANTITY
34	4027888	MK IV STENCIL 4 HIGH	REF
35	H3911X05	LOGO, HARSCO	REF
36	H3911X02	LOGO, HARSCO	REF
37	H6249X01	DECAL BRAKE ADJUST	REF
38	H6255X01	DECAL DIESEL FUEL	REF
39	H6253Y01	DECAL ENG. OIL DRAIN	REF
40	H6250Y01	DECAL HYD OIL	REF
41	H6258Y01	DECAL ANTIFREEZE	REF
42	D2652Y03	STENCIL, MACHINE WEIGHT	REF
43	H6254Y01	DECAL AIR DRAIN	REF
44	H6251Y01	AIR BAG PRESS DECAL	REF
45	D4536Y08	STENCIL, LIFT HERE	REF
46	H6252Y01	DECAL TRANSMISSION	REF
47	4027887	MK IV STENCIL	REF
48	H6256Y01	DECAL RETURN FILTER	REF
49	H6257Y01	DECAL TANK STRAINER	REF
50	BLANK		
51	H5105Y21	DECAL JUPITER CAN NUMBER	REF
52	H6018Y01	DECAL MCB	REF
53	H6883Y01	DECAL ECM BREAKER BOX	REF
54	4011597	DECAL LOCK PIN NUMBER	REF
55	BLANK		
56	BLANK		
57	BLANK		
58	H1330PAZ	DECAL, STENCIL / KIT	1
59	0-1304356-0-01	LOGO PLATE	1
60	C9128W05	SERVICE CHART	1
61	C9129W04	SERVICE PLAQUE	1
62	D1029W02	TRAVEL LOCKS NAMEPLATE	1
63	D1074W05	DECAL, OPERATIONS GUIDE	1
64	2004530	NAMEPLATE-BATTERY SWITCH	1
65	H1374Y01	RIBBED VINYL GRIP	7
66	G6509X26	DECAL, ENERGY CONTROL	1

CONFIDENTIAL
© COPYRIGHT 2001 HARSCO TRACK TECHNOLOGIES. THIS DRAWING OR DOCUMENT IS THE PROPERTY OF HARSCO TRACK TECHNOLOGIES AND EMBODIES CONFIDENTIAL INFORMATION, TRADE SECRET INFORMATION, AND/OR KNOW-HOW THAT IS THE PROPERTY OF HARSCO TRACK TECHNOLOGIES. BY ACCEPTING THIS DRAWING OR DOCUMENT, THE RECIPIENT AGREES (1) NOT TO PROVIDE, OR OTHERWISE MAKE AVAILABLE, THE DRAWING OR DOCUMENT, OR ANY INFORMATION OR KNOW-HOW EMBODIED THEREIN, TO ANY THIRD PARTY AND (2) NOT TO REPRODUCE OR USE THE DRAWING OR DOCUMENT TO MANUFACTURE ANY APPARATUS OR DEVICE, WITHOUT THE PRIOR WRITTEN AUTHORIZATION OF HARSCO TRACK TECHNOLOGIES.

SOLID EDGE DRAWING

IMPLIED TOLERANCES
ALL DIMENSIONS ARE IN INCHES - TOLERANCE UNLESS OTHERWISE SPECIFIED

NOMINAL SIZE RANGE		INCH PLUS OR MINUS		NOMINAL SIZE RANGE		METRIC PLUS OR MINUS	
OVER	TO	2 PLACE DECIMAL	3 PLACE DECIMAL	OVER	TO	1 PLACE DECIMAL	2 PLACE DECIMAL
0	6	.03	.005	0	150	.8	.13
6	24	.04	.008	150	600	1.0	.20
24	-	.06	.010	-	600	1.5	.25

UNLESS OTHERWISE SPECIFIED ALL MACHINED SURFACES WILL HAVE:
A SURFACE FINISH OF 125 MICRONCHES
ANGULAR TOLERANCE OF ±.50°
CONCENTRICITY WITHIN .010

THIRD ANGLE PROJECTION

UNLESS OTHERWISE SPECIFIED ALL WELDS SHOULD ADHERE TO THE LATEST HTT WELD-ING SPECIFICATION 101

CHANGE	R/L	REVISION	DATE
1317334	A	RELEASE	2-26-07
100558	B	ADDED IT-54	10-07-08
101462	C	DELETED REFERNCE IT - 50 WAS H3588X01	03-12-08
102613	D	ITEMS 35, 36, 59 LOGO UPDATED	03-10-09
102808	E	ITEM 35 WAS H3911X01	6-10-09
105280	F	ITEM 34 WAS H1279Y02, IT-47 WAS H1279Y01, IT-64 WAS D4486Y12	02-16-10

Description: LOGO INSTALLATION
Drawing Number: ———————
Machine Type: LOGO INSTALLATION
Model: H1270WAG.dft
Weight: ———
Scale: 1:4
Drawn: mflaming
Date Drawn: 03-12-08
APVD Dwg: HW
APVD Chkg: JBR
Mat'l: ———

HTT
Harsco Track Technologies
Harsco
Columbia, SC

Part Number: H1270WAG
Size: D
Sheet: 4 of 4

Plotted by shuffstetler on 9/9/2010 H1270WAG.dft

ITEM	PART NUMBER	QTY	DESCRIPTION
10	H1272Y01	2	BUGGY SAFETY LABEL
20	H1272Y02	3	CHAIN SAFETY LABEL
30	H1272Y03	4	BK SPRING SAFETY LABEL
40	H1272Y04	4	HYD OIL SAFETY LABEL
50	H1272Y05	1	DRYER SAFETY LABEL
60	H1272Y06	1	PURGE TANK SAFETY LABEL
70	H1272Y07	2	KEEP BACK SAFETY LABEL
80	H1272Y08	1	SEAT BELT SAFETY LABEL
90	H1272Y09	1	PERSONNEL SAFETY LABEL
100	H1272Y10	1	READ MANUAL SAFETY LABEL
110	5011167	3	DECAL, TOWING SAFETY LABEL
120	H1272Y12	2	REC BUGGY SAFETY LABEL
130	H1272Y13	2	CRUSH HAZ. SAFETY LABEL
140	H1272Y14	2	CRUSH HAZ. SAFETY LABEL
150	H1272Y15	1	PARK BRAKE SAFETY LABEL
160	A8308Y01	4	ADJUST WARNING DECAL
170	D2338Y01	11	DECAL CAUTION PINCH PT
180	D2340Y01	9	DECAL CAUTION WATCH ST
190	D2341Y01	2	DECAL DANGER HOT
200	D2348X01	2	DECAL FAN
210	D2349Y01	1	DECAL CAUTION AIR PRESS
220	D2350Y01	7	DECAL CAUTION LOCK PINS
230	D2502Y01	2	FORK LIFT CAUTION LABEL
240	5008222	2	DECAL-TOWING
250	5008638	2	LABEL, SHIFTER HOSING
260	5008648	2	LABEL, TRANSMISSION SHIFT
270	5011241	1	DECAL, FALLBACK FUNCTIONALITY
280	0-1304356-0-01	1	LOGO PLATE
290	5010858	1	DECAL, SERVICE CHART
300	5010960	1	DECAL, SERVICE PLAQUE

ITEM	PART NUMBER	QTY	DESCRIPTION
310	5010845	1	DECAL, TRAVEL LOCKS NAMEPLATE
320	5010501	1	DECAL, OPERATIONS GUIDE
330	2004530	1	NAMEPLATE-BATTERY SWITCH
340	4027888	2	MK IV STENCIL 4 HIGH
350	H3911X05	2	LOGO, HARSCO
360	H3911X02	1	LOGO, HARSCO
370	H6249X01	4	DECAL BRAKE ADJUST
380	H6255X01	1	DECAL DIESEL FUEL
390	H6253Y01	1	DECAL ENG. OIL DRAIN
400	H6250Y01	2	DECAL HYD OIL
410	H6258Y01	2	DECAL ANTIFREEZE
420	5009368	2	DECAL, MACHINE WEIGHT
430	H6254Y01	1	DECAL AIR DRAIN
440	G6279Y01	1	OILER DECAL
450	D4536Y08	4	STENCIL, LIFT HERE
460	5011180	1	DECAL, AXLE DRIVE FLUID
470	4027887	2	MK IV STENCIL
480	H6256Y01	2	DECAL RETURN FILTER
490	H6257Y01	2	DECAL TANK STRAINER
500	H1374Y01	7	RIBBED VINYL GRIP
510	H5105Y21	1	DECAL JUPITER CAN NUMBER
520	H6018Y01	1	DECAL MCB
530	5004135	1	LABEL- EMISSION CONTROL
540	4011597	1	DECAL LOCK PIN NUMBER
550	5010837	1	DECAL, ENERGY CONTROL
560	5012360	2	DECAL, JUPITER ON BOARD

NOTES:

1. LOCATE ALL ITEMS APPROXIMATELY AS SHOWN UNLESS LOCATING DIMENSIONS ARE GIVEN.
2. MASK ALL HOSES, CABLES, CHROME, AIR DRYER, WINDOWS, MOLDINGS & WEATHERSTRIPPING BEFORE PAINTING.
3. PAINT ENTIRE MACHINE YELLOW, L421507, EXCEPT WHERE INDICATED.
4. PAINT GLOSS BLACK, L421518, THE FOLLOWING: TOWING EYES, STEPS, HANDRAILS, WHEELS, TIE DOWN LUGS, LIFTING LUGS, & JACKING PADS WHEN USED.
5. PAINT FLAT BLACK, L421506, THE FOLLOWING: SHADOWBOARD, MUFFLER & TAIL PIPES.
6. PAINT BLUE, L421524, HYDRAULIC TANK COVERS.
7. PAINT GREEN, L422902, FUEL TANK COVERS.
8. PAINT RED, L421523, THE FOLLOWING: W/H LOCKING LEVER, ALL SAFETY HOOKS & PINS, ON BUGGY LIFT SYSTEM - HOOKS, PINS & RINGS, PUSHER BUGGY FOLDING JOINTS (12" EACH JOINT), & THE COMBO CLAMP BUMPER BOLTS & PADS.
9. PAINT NON-SKID BLACK, A4776Y01, THE FOLLOWING: BATTERY BOX LID & (3) TOOL BOX LIDS, REAR STEPS AND PLATFORM.
10. PAINT WHITE, 0-3041003-0-54, CAB ROOF.
11. IT-510, JUPITER CAN NUMBER DECALS, SEE THE GENERAL ELEC DWG FOR ALL LOCATIONS & SCRAP ANY NUMBERS NOT USED. (DO NOT PLACE CAN NUMBERS ON CANS).
12. IT-540, LOCK PIN NUMERS, USE 1 SET HERE ON SHEET 2 AND THE OTHER ON SHEET 4 AS SHOWN.

Inch
[mm]

CONFIDENTIAL

© COPYRIGHT 2011 HARSCO. THIS DRAWING OR DOCUMENT IS THE PROPERTY OF HARSCO AND EMBODIES CONFIDENTIAL INFORMATION, TRADE SECRET INFORMATION, AND/OR KNOW-HOW THAT IS THE PROPERTY OF HARSCO. BY ACCEPTING THIS DRAWING OR DOCUMENT, THE RECIPIENT AGREES (1) NOT TO PROVIDE, OR OTHERWISE MAKE AVAILABLE, THE DRAWING OR DOCUMENT, OR ANY INFORMATION OR KNOW-HOW EMBODIED THEREIN, TO ANY THIRD PARTY AND (2) NOT TO REPRODUCE OR USE THE DRAWING OR DOCUMENT TO MANUFACTURE ANY APPARATUS OR DEVICE, WITHOUT THE PRIOR WRITTEN AUTHORIZATION OF HARSCO.

NOMINAL SIZE RANGE		INCH PLUS OR MINUS		NOMINAL SIZE RANGE		METRIC PLUS OR MINUS	
OVER	TO	2 PLACE DECIMAL	3 PLACE DECIMAL	OVER	TO	1 PLACE DECIMAL	2 PLACE DECIMAL
0	6	.03	.005	0	150	.8	.13
6	24	.04	.008	150	600	1.0	.20
24	-	.06	.010	600	-	1.5	.25

UNLESS OTHERWISE SPECIFIED ALL MACHINED SURFACES WILL HAVE:
A SURFACE FINISH OF 125 MICRONCHES
ANGULAR TOLERANCE OF +/- 50'
CONCENTRICITY WITHIN .010

THIRD ANGLE PROJECTION

UNLESS OTHERWISE SPECIFIED, ALL WELDS SHOULD ADHERE TO THE MOST CURRENT A.W.S WELDING STANDARDS

CHANGE	R/L	REVISION	DR	DATE
EC502431	A	RELEASE	HW	04-09-12

Description: LOGO INSTALLATION

HARSCO RAIL

Material: ---
Machine Type: MARK IV HD
Size: D
Weight: ---
Drawn: hwiggins
Date Drawn: 4/9/2012
Part Number: 5010237
Sheet: 1 of 4

SOLID EDGE DRAWING — DO NOT SCALE

SAFETY LABEL IDENTIFICATION
ITEMS AND QUANTITIES FOR THIS SHEET

ITEM 10	ITEM 30	ITEM 40	ITEM 70	ITEM 130	ITEM 140	ITEM 160	ITEM 170	ITEM 180	ITEM 190	ITEM 200	ITEM 220	ITEM 230
QTY 1	QTY 2	QTY 2	QTY 1	QTY 1	QTY 1	QTY 2	QTY 5	QTY 1	QTY 1	QTY 1	QTY 5	QTY 1

STENCIL / DECAL IDENTIFICATION
ITEMS AND QUANTITIES FOR THIS SHEET

510 (SEE NOTE 11)

ITEM 350	ITEM 370	ITEM 380	ITEM 390	ITEM 400	ITEM 410	ITEM 420	ITEM 450	ITEM 460	ITEM 470	ITEM 510	ITEM 540	ITEM 560
QTY 1	QTY 2	QTY 1	QTY 1	QTY 1	QTY 1	QTY 1	QTY 2	QTY 1	QTY 1	QTY 1	QTY 1	QTY 1

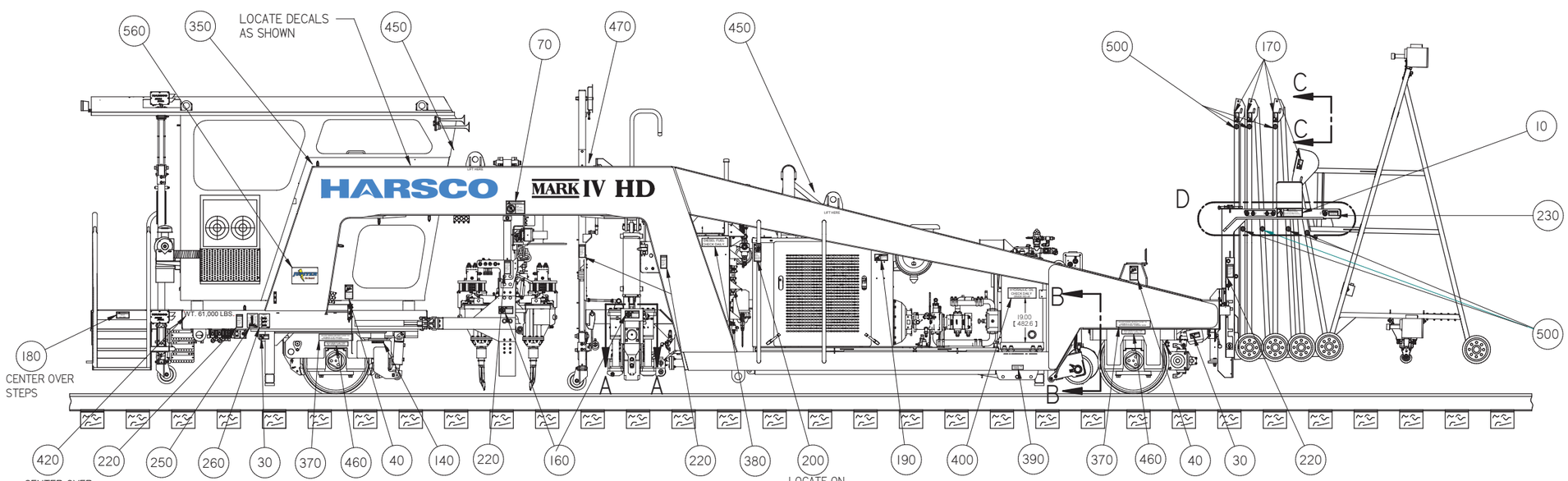

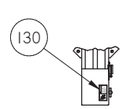

VIEW A - A
COMBO CLAMP HOOK COVER

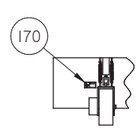

VIEW B - B
ENCODER WHEEL

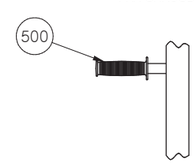

VIEW C - C
BUGGY HANDLE GRIP ENLARGED

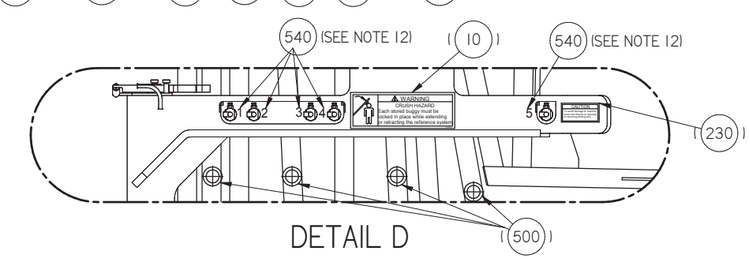

DETAIL D

Inch
[mm]

CONFIDENTIAL
© COPYRIGHT 2011 HARSCO. THIS DRAWING OR DOCUMENT IS THE PROPERTY OF HARSCO AND EMBODIES CONFIDENTIAL INFORMATION, TRADE SECRET INFORMATION, AND/OR KNOW-HOW THAT IS THE PROPERTY OF HARSCO. BY ACCEPTING THIS DRAWING OR DOCUMENT, THE RECIPIENT AGREES (1) NOT TO PROVIDE, OR OTHERWISE MAKE AVAILABLE, THE DRAWING OR DOCUMENT, OR ANY INFORMATION OR KNOW-HOW EMBODIED THEREIN, TO ANY THIRD PARTY AND (2) NOT TO REPRODUCE OR USE THE DRAWING OR DOCUMENT TO MANUFACTURE ANY APPARATUS OR DEVICE, WITHOUT THE PRIOR WRITTEN AUTHORIZATION OF HARSCO.

NOMINAL SIZE RANGE		INCH PLUS OR MINUS	
OVER	TO	2 PLACE DECIMAL	3 PLACE DECIMAL
0	6	.03	.005
6	24	.04	.008
24	-	.06	.010

NOMINAL SIZE RANGE		METRIC PLUS OR MINUS	
OVER	TO	1 PLACE DECIMAL	2 PLACE DECIMAL
0	150	.8	.13
150	600	1.0	.20
600	-	1.5	.25

UNLESS OTHERWISE SPECIFIED ALL MACHINED SURFACES WILL HAVE:
A SURFACE FINISH OF 125 MICROINCHES
ANGULAR TOLERANCE OF +/- 50'
CONCENTRICITY WITHIN: .010

THIRD ANGLE PROJECTION

UNLESS OTHERWISE SPECIFIED, ALL WELDS SHOULD ADHERE TO THE MOST CURRENT A.W.S WELDING STANDARDS

CHANGE	R/L	REVISION	DR	DATE
EC502431	A	RELEASE	HW	04-09-12

Description: LOGO INSTALLATION

HARSCO RAIL

Material: --- ---
Weight: ---
Machine Type: MARK IV HD
Size: D
Drawn: hwiggins
Date Drawn: 4/9/2012
Part Number: 5010237
Sheet: 2 of 4

SOLID EDGE DRAWING
DO NOT SCALE

SAFETY LABEL IDENTIFICATION
ITEMS AND QUANTITIES FOR THIS SHEET

ITEM 10	ITEM 30	ITEM 40	ITEM 50	ITEM 60	ITEM 70	ITEM 130	ITEM 140	ITEM 160	ITEM 170	ITEM 180	ITEM 190	ITEM 200	ITEM 210	ITEM 220
QTY 1	QTY 2	QTY 2	QTY 1	QTY 1	QTY 1	QTY 1	QTY 1	QTY 2	QTY 4	QTY 5	QTY 1	QTY 1	QTY 1	QTY 2

STENCIL / DECAL IDENTIFICATION
ITEMS AND QUANTITIES FOR THIS SHEET

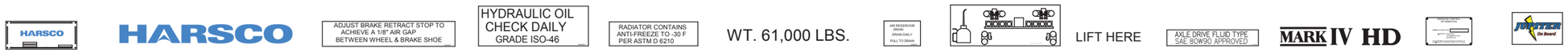

ITEM 280	ITEM 350	ITEM 370	ITEM 400	ITEM 410	ITEM 420	ITEM 430	ITEM 440	ITEM 450	ITEM 460	ITEM 470	ITEM 530	ITEM 560
QTY 1	QTY 1	QTY 2	QTY 1	QTY 1	QTY 1	QTY 1	QTY 1	QTY 2	QTY 1	QTY 1	QTY 1	QTY 1

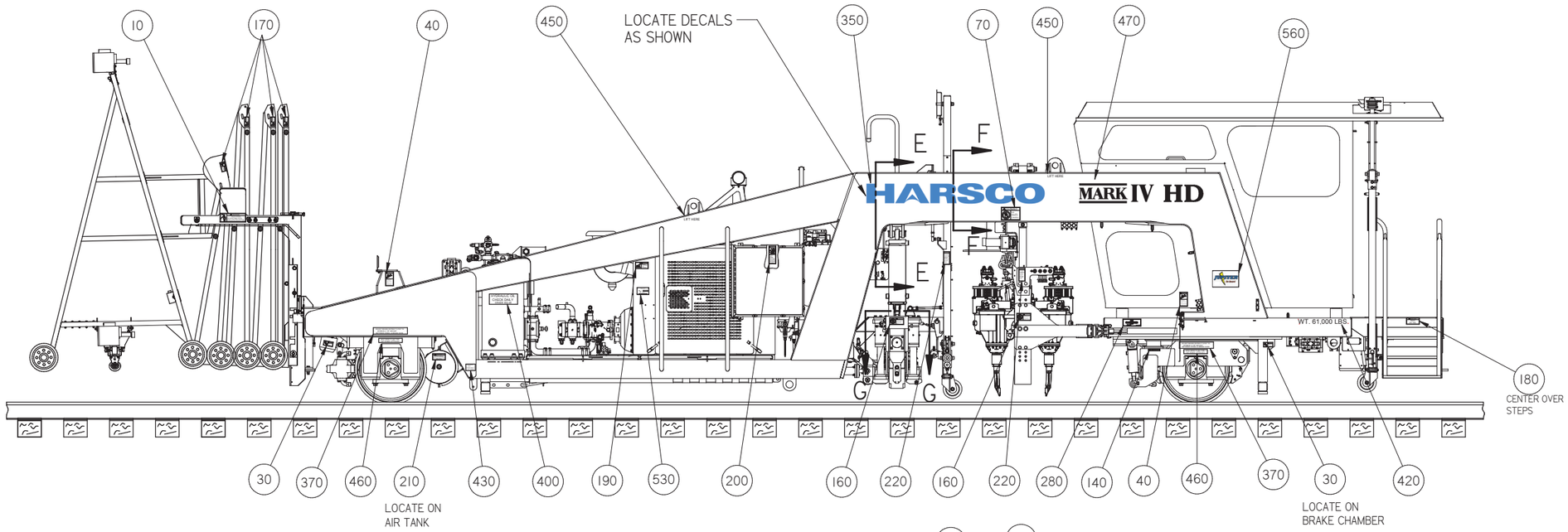

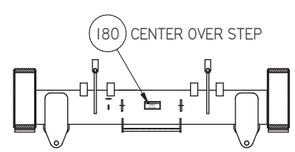

SECTION E - E
JACK BEAM

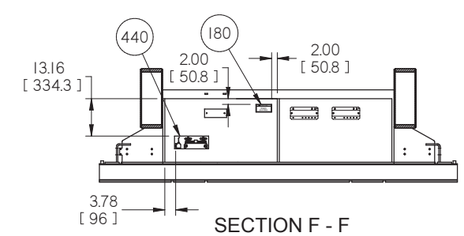

SECTION F - F
TRAVERSE BEAM

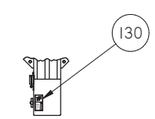

VIEW G - G
COMBO CLAMP
HOOK COVER

NOTES:

3.1 LOCATE ALL ITEMS APPROXIMATELY AS SHOWN UNLESS LOCATING DIMENSIONS ARE GIVEN.

Inch
[mm]

CONFIDENTIAL
© COPYRIGHT 2011 HARSCO. THIS DRAWING OR DOCUMENT IS THE PROPERTY OF HARSCO AND EMBODIES CONFIDENTIAL INFORMATION, TRADE SECRET INFORMATION, AND/OR KNOW-HOW THAT IS THE PROPERTY OF HARSCO. BY ACCEPTING THIS DRAWING OR DOCUMENT, THE RECIPIENT AGREES (1) NOT TO PROVIDE, OR OTHERWISE MAKE AVAILABLE, THE DRAWING OR DOCUMENT, OR ANY INFORMATION OR KNOW-HOW EMBODIED THEREIN, TO ANY THIRD PARTY AND (2) NOT TO REPRODUCE OR USE THE DRAWING OR DOCUMENT TO MANUFACTURE ANY APPARATUS OR DEVICE, WITHOUT THE PRIOR WRITTEN AUTHORIZATION OF HARSCO.

NOMINAL SIZE RANGE		INCH PLUS OR MINUS	
OVER	TO	2 PLACE DECIMAL	3 PLACE DECIMAL
0	6	.03	.005
6	24	.04	.008
24	-	.06	.010

NOMINAL SIZE RANGE		METRIC PLUS OR MINUS	
OVER	TO	1 PLACE DECIMAL	2 PLACE DECIMAL
0	150	.8	.13
150	600	1.0	.20
600	-	1.5	.25

UNLESS OTHERWISE SPECIFIED ALL MACHINED SURFACES WILL HAVE;
A SURFACE FINISH OF 125 MICROINCHES
ANGULAR TOLERANCE OF ± 50"
CONCENTRICITY WITHIN .010

THIRD ANGLE PROJECTION

UNLESS OTHERWISE SPECIFIED, ALL WELDS SHOULD ADHERE TO THE MOST CURRENT A W S WELDING STANDARDS

CHANGE	R/L	REVISION	DR.	DATE
EC502431	A	RELEASE	HW	04-09-12

Description: LOGO INSTALLATION

HARSCO RAIL

Material: – – –
Machine Type: MARK IV HD
Size: D
Weight: ---
Drawn: hwiggins
Date Drawn: 4/9/2012
Part Number: 5010237
Sheet: 3 of 4

SOLID EDGE DRAWING
DO NOT SCALE

NAMEPLATE IDENTIFICATION
ITEMS AND QUANTITIES FOR THIS SHEET

ITEM 290
QTY 1

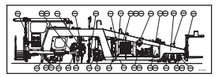
ITEM 300
QTY 1

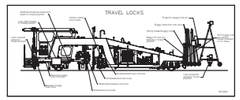

ITEM 310
QTY 1

ITEM 320
QTY 1

ITEM 330
QTY 1

ITEM 270
QTY 1

ITEM 550
QTY 1

SAFETY LABEL IDENTIFICATION
ITEMS AND QUANTITIES FOR THIS SHEET

ITEM 20
QTY 3

ITEM 80
QTY 1

ITEM 90
QTY 1

ITEM 100
QTY 1

ITEM 110
QTY 3

ITEM 120
QTY 2

ITEM 150
QTY 1

ITEM 170
QTY 2

ITEM 180
QTY 3

ITEM 230
QTY 1

STENCIL / DECAL IDENTIFICATION
ITEMS AND QUANTITIES FOR THIS SHEET

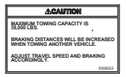

ITEM 240
QTY 2

MARK IV HD
ITEM 340
QTY 2

HARSCO
ITEM 360
QTY 1

ITEM 480
QTY 2

ITEM 490
QTY 2

ITEM 520
QTY 1

NOTES:

4.I LOCATE ALL ITEMS APPROXIMATELY AS SHOWN UNLESS LOCATING DIMENSIONS ARE GIVEN.

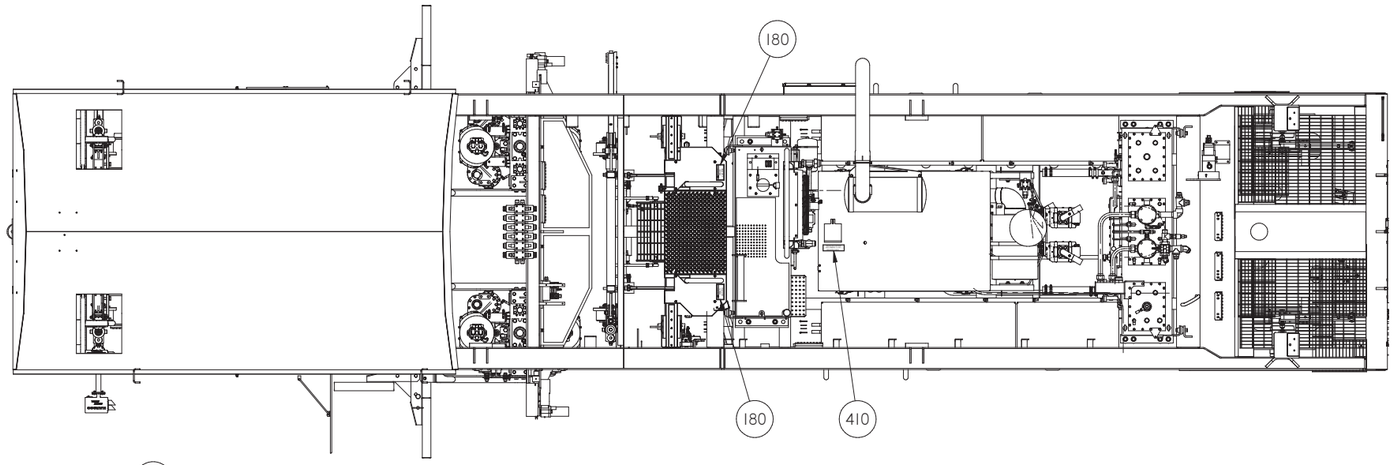

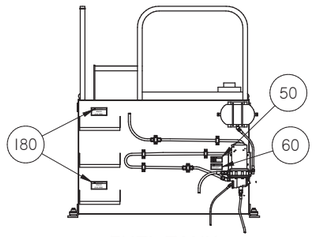

FUEL TANK
FRONT VIEW

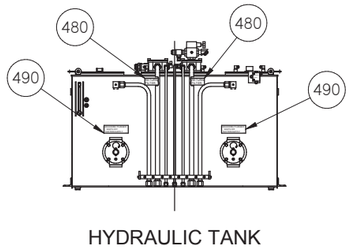

HYDRAULIC TANK
REAR VIEW

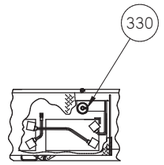

BATTERY BOX
TOP VIEW

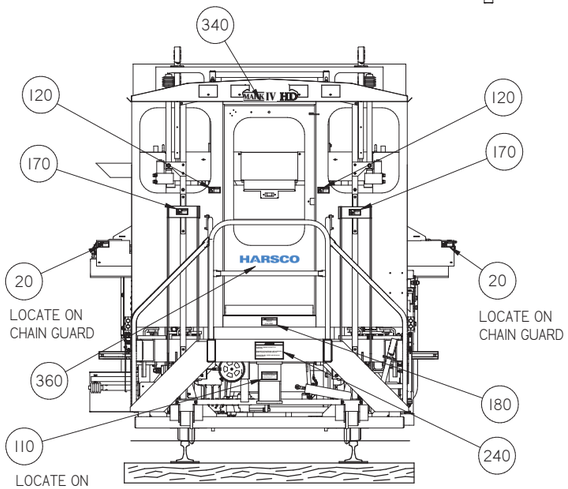

LOCATE ON CHAIN GUARD
LOCATE ON CHAIN GUARD
LOCATE ON TOW LUG TUBE

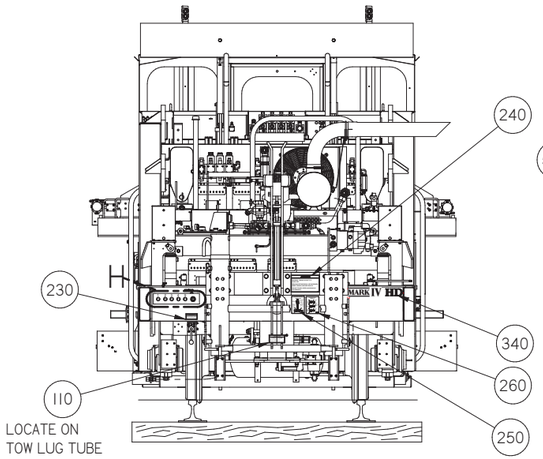

LOCATE ON TOW LUG TUBE

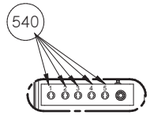

DETAIL H

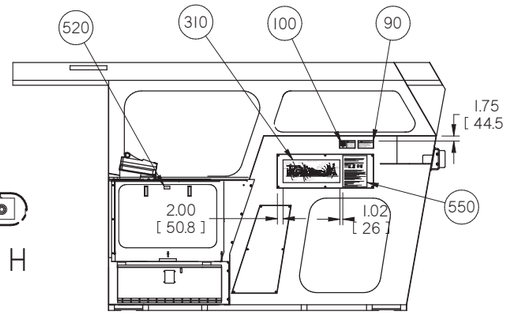

INSIDE OF CAB
LEFT SIDE

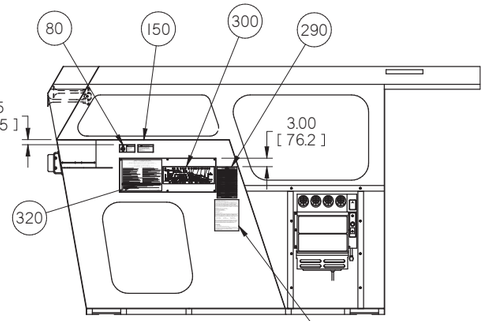

INSIDE OF CAB
RIGHT SIDE

Inch
[mm]

CONFIDENTIAL
© COPYRIGHT 2011 HARSCO. THIS DRAWING OR DOCUMENT IS THE PROPERTY OF HARSCO AND EMBODIES CONFIDENTIAL INFORMATION, TRADE SECRET INFORMATION, AND/OR KNOW-HOW THAT IS THE PROPERTY OF HARSCO. BY ACCEPTING THIS DRAWING OR DOCUMENT, THE RECIPIENT AGREES (1) NOT TO PROVIDE, OR OTHERWISE MAKE AVAILABLE, THE DRAWING OR DOCUMENT, OR ANY INFORMATION OR KNOW-HOW EMBODIED THEREIN, TO ANY THIRD PARTY AND (2) NOT TO REPRODUCE OR USE THE DRAWING OR DOCUMENT TO MANUFACTURE ANY APPARATUS OR DEVICE, WITHOUT THE PRIOR WRITTEN AUTHORIZATION OF HARSCO.

NOMINAL SIZE RANGE		INCH PLUS OR MINUS	
OVER	TO	2 PLACE DECIMAL	3 PLACE DECIMAL
0	6	.03	.005
6	24	.04	.008
24	-	.06	.010

NOMINAL SIZE RANGE		METRIC PLUS OR MINUS	
OVER	TO	1 PLACE DECIMAL	2 PLACE DECIMAL
0	150	.8	.13
150	600	1.0	.20
600	-	1.5	.25

UNLESS OTHERWISE SPECIFIED ALL MACHINED SURFACES WILL HAVE;
A SURFACE FINISH OF 125 MICROINCHES
ANGULAR TOLERANCE OF ± 50'
CONCENTRICITY WITHIN ±10

THIRD ANGLE PROJECTION

UNLESS OTHERWISE SPECIFIED, ALL WELDS SHOULD ADHERE TO THE MOST CURRENT A.W.S WELDING STANDARDS

CHANGE	R/L	REVISION	DR	DATE
EC502431	A	RELEASE	HW	04-09-12

Description: LOGO INSTALLATION

HARSCO RAIL

Material: – – –
Weight: – – –
Drawn: hwiggins
Date Drawn: 4/9/2012
Machine Type: MARK IV HD
Part Number: 5010237
Size: D
Sheet: 4 of 4

SOLID EDGE DRAWING
DO NOT SCALE

CONFIDENTIAL
© COPYRIGHT 2011 HARSCO. THIS DRAWING OR DOCUMENT IS THE PROPERTY OF HARSCO AND EMBODIES CONFIDENTIAL INFORMATION, TRADE SECRET INFORMATION, AND/OR KNOW-HOW THAT IS THE PROPERTY OF HARSCO. BY ACCEPTING THIS DRAWING OR DOCUMENT, THE RECIPIENT AGREES (1) NOT TO PROVIDE, OR OTHERWISE MAKE AVAILABLE, THE DRAWING OR DOCUMENT, OR ANY INFORMATION OR KNOW-HOW EMBODIED THEREIN, TO ANY THIRD PARTY AND (2) NOT TO REPRODUCE OR USE THE DRAWING OR DOCUMENT TO MANUFACTURE ANY APPARATUS OR DEVICE, WITHOUT THE PRIOR WRITTEN AUTHORIZATION OF HARSCO.

MARK IV FLUID REQUIREMENTS

COMPONENT	FLUID TYPE	SPECIFICATION	APPROX QTY. SEE NOTE 2
ENGINE	CRANKCASE OIL	SHELL ROTELLA T SAE 15W40 WITH XLA OR EQUIVALENT	23 QTS.
RADIATOR	ENGINE COOLANT	ANTIFREEZE PER ASTM D 6210	11 1/2 GAL TOTAL
FUEL TANK	DIESEL FUEL	ASTM GRADE 2-D CLIMATIZED DIESEL FUEL	185 GAL CAPACITY. FILL 1/2
HYDRAULIC TANK	HYDRAULIC OIL	GRADE ISO-46	184 GAL
WORKHEADS	VIBRATOR CRANKCASE OIL	SAE 10W40 XAD (SEE NOTE 3)	6 QTS EACH VIBRATOR
DURST AXLE GEARBOX	AXLE GEARBOX GEAR OIL	MOBIL-MOBILUBE HD, EP LUBRICANT SAE 80W-90	25.5 QTS. EACH
PUMP DRIVE	GEAR OIL	MULTI GEAR LUBE SAE 80W-90	3.5 QTS.

NOTES:

1. ALL FLUIDS SHOULD BE ADDED ACCORDING TO SPECIFIC COMPONENT INSTRUCTIONS WHERE APPLICABLE.
2. FILL TO APPROPRIATE LEVELS FOR EACH COMPONENT.
3. OIL TO BE CHANGED (IN THE FIELD) AFTER 8 HOURS OF OPERATION IN THE FIELD. (BREAK IN PERIOD)

Inch
[mm]

NOMINAL SIZE RANGE		INCH PLUS OR MINUS		NOMINAL SIZE RANGE		METRIC PLUS OR MINUS	
OVER	TO	2 PLACE DECIMAL	3 PLACE DECIMAL	OVER	TO	1 PLACE DECIMAL	2 PLACE DECIMAL
0	6	.03	.005	0	150	.8	.13
6	24	.04	.008	150	600	1.0	.20
24	-	.06	.010	600	-	1.5	.25

UNLESS OTHERWISE SPECIFIED, ALL MACHINED SURFACES WILL HAVE:
A SURFACE FINISH OF 125 MICROINCHES
ANGULAR TOLERANCE OF ± .50°
CONCENTRICITY WITHIN .010

THIRD ANGLE PROJECTION

UNLESS OTHERWISE SPECIFIED, ALL WELDS SHOULD ADHERE TO THE MOST CURRENT A.W.S WELDING STANDARDS

CHANGE	R/L	REVISION	DR	DATE
EC501209	A	RELEASE	HW	05-25-11

Description: FLUID FILL GUIDE

HARSCO RAIL

Material: ----------
Weight: ----------
Drawn: hwiggins
Date Drawn: 5/25/2011
Machine Type: MARK IV
Part Number: 5008518
Size: B
Sheet: 1 of 1

SOLID EDGE DRAWING
DO NOT SCALE

ENG.DWG.NO.
H4851WAA

REVISIONS							
NO	ER	DESCRIPTION	ZONE	DR	CK	APP	MF
1	12429	NEW RELEASE		JBR			
			X-X	XXX	XXX	XXX	

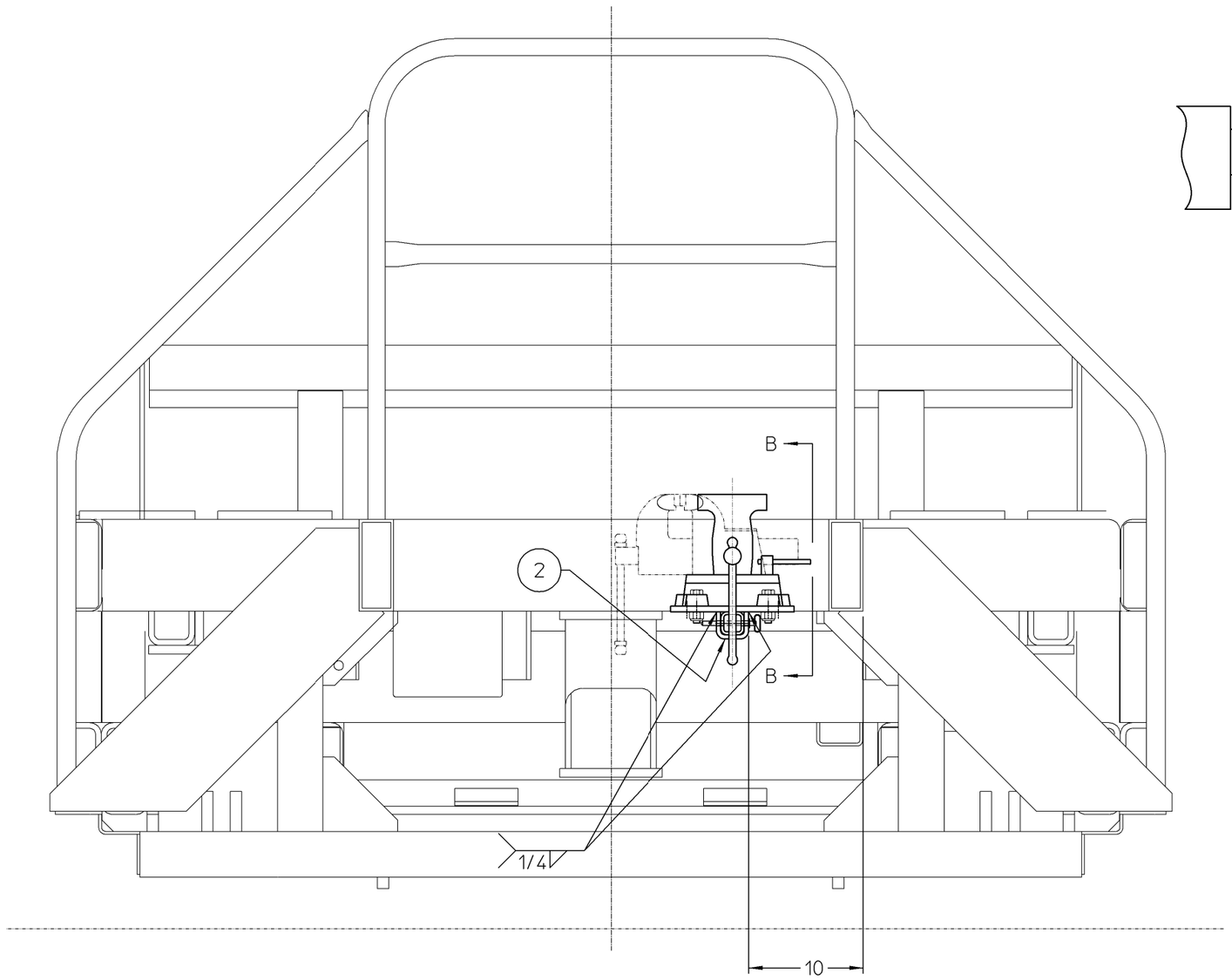

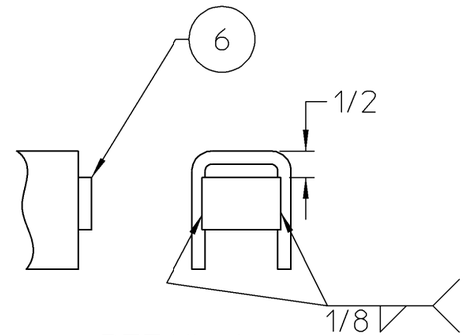

DETAIL A

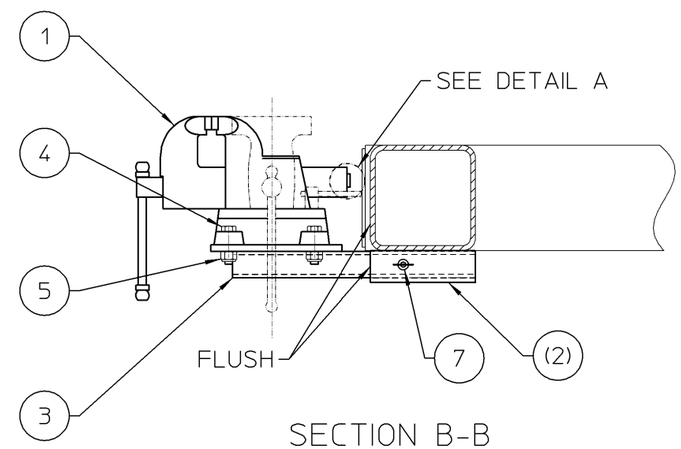

SECTION B-B

FIG NO.	ITEM NO.	PART NUMBER	DESCRIPTION AND MATERIAL SIZE (REF.ONLY)	QTY
	7	0-3015004-0-08	3/8 X 4 HITCH PIN	1
	6	A0211T79	FLAT BAR, 1/4 X 1 X 1 1/2	1
	5	L40006	5/8-11 ESNA NUT	1
	4	A0036182	5/8-11 X 3 HEX HD CAP SCREW	1
	3	H4849XAA	VISE SUPPORT WELDMENT	1
	2	H4850X01	VISE SUPPORT	1
	1	0-3030002-0-04	6" SWIVEL BASE VISE	1

IMPLIED TOLERANCES
ALL DIMENSIONS ARE IN INCHES-TOLERANCE UNLESS OTHERWISE SPECIFIED

NOMINAL SIZE RANGE		PLUS OR MINUS			NOMINAL SIZE RANGE		PLUS OR MINUS		
OVER	TO	FRACTION	2 PLACE DECIMAL	3 PLACE DECIMAL	OVER	TO	FRACTION	2 PLACE DECIMAL	3 PLACE DECIMAL
-	1	1/64	.01	.003	6	24	3/64	.03	.008
1	6	1/32	.02	.005	24	-	1/16	.05	.010

ANGULAR DIMENSIONS PLUS OR MINUS 1 DEGREE

√ ALL MACHINED SURFACES TO HAVE A SURFACE FINISH OF 125 MICROINCHES UNLESS OTHERWISE SPECIFED.

WELDING SPECIFICATION

UNLESS OTHERWISE SPECIFIED ALL WELDS SHOULD ADHERE TO FAIRMONT TAMPER WELDING SPECIFICATION NO. 101

WEIGHT lbs.

3rd ANGLE PROJECTION

DO NOT SCALE

SHEET 1 CONT. – ON

DESCRIPTION 124: REMOVABLE VISE INSTL

DRAWN J Rowell	DATE 10/08/2001	MACHINE TYPE MARK IV	
CHECKED HW	DATE 10/09/2001		
APP-ENG A.Lindsey	DATE 10/08/2001		
APP-MFG	DATE		
LAST ECR. 12429 .15	CHECKED hwi	ENG.DWG.NO. H4851WAA	
	DATE 12-Oct-01		

Fairmont Tamper™
2401 Edmund Road-Box 20
Cayce-West Columbia,
South Carolina 29171-0020
(803) 822-9160

THIS DOCUMENT CONTAINS PROPRIETARY INFORMATION AND SUCH INFORMATION MAY NOT BE DISCLOSED TO OTHERS FOR ANY PURPOSE OR USED FOR MANUFACTURING PURPOSES WITHOUT THE WRITTEN PERMISSION OF FAIRMONT TAMPER.

MISCELLANEOUS COMPONENTS
REPAIR PARTS

ITEM	PART NO	DESCRIPTION	QTY
	0-3502052-0-01	First Aid Kit	1
	Z780613-001	Fire Extinguisher – 20 lb	1
	0-1400876-0-01	Fire Extinguisher Mounting Bracket	1
	L425144	Padlock	9
	5007763	Operation Manual – Mark IV HD J2	1
	5007767	Parts Manual – Mark IV HD J2	1
	5007765	CD Manuals – Mark IV HD J2	1
	4031637	Users Manual – Rail System 4000	1
	0-3002626-0-00	Operation Manual – Cummins QSC8.3 Tier III	1
	0-3002627-0-00	Parts Manual – Cummins QSC8.3 Tier III	1

LIMITED WARRANTY

Harsco Rail warrants products of its manufacture to be free of defects in material and workmanship, under normal use and service for a period of six (6) months from date of delivery to the original user. The obligation of Harsco Rail under this warranty is limited to repairing or replacing at its factories, or other location designated by it, any part or parts thereof which are returned within 30 days of the date when failure occurs or defect is noted, with transportation charges prepaid, and which upon examination appears to the satisfaction of Harsco Rail to have been defective. Such free repair or replacement does not include transportation charges, or the cost of installing the new part or any other expense incident thereto. Harsco Rail will not be liable for other loss, damage, or expense directly or indirectly arising from the use of its product, nor will Harsco Rail be liable for special, incidental, or consequential damages.

Ordinary wear and tear, and damage from abuse, misuse, neglect or alteration are not covered by this warranty. Harsco Rail assumes no liability for expense incurred or repairs made outside its factories except by written consent. This warranty is null and void if instructions and operating procedures are not followed.

Equipment and parts not manufactured by Harsco Rail, but which are furnished in connection with Harsco Rail products, are covered directly by the warranty of the manufacturer supplying them. However, Harsco Rail will assist in obtaining adjustment on such equipment or parts when necessary.

THIS WARRANTY IS IN LIEU OF ALL OTHER WARRANTIES EXPRESSED OR IMPLIED INCLUDING ANY IMPLIED WARRANTIES OF MERCHANTABILITY OR FITNESS FOR A PARTICULAR PURPOSE, WHICH ARE HEREBY DISCLAIMED AND OF ANY OTHER OBLIGATION OR LIABILITY OF HARSCO RAIL. THE REMEDY SET FORTH ABOVE IS BUYER'S EXCLUSIVE REMEDY FOR A BREACH OF THE WARRANTY. UNDER NO CIRCUMSTANCES WILL HARSCO RAIL BE RESPONSIBLE FOR INCIDENTAL, CONSEQUENTIAL, SPECIAL OR OTHER INDIRECT DAMAGES.

INDEMNITY

Buyer agrees to indemnify and hold Harsco Rail harmless for all loss, cost including but not limited to legal and other cost of proceedings, and damages suffered by Buyer or claimed by third parties by or related to Buyer's use of Harsco Rail's products.

PRODUCT IMPROVEMENT LIABILITY DISCLAIMER

Harsco Rail reserves the right to make any changes in or improvements to its products without incurring any liability or obligation whatsoever and without being required to make any corresponding changes or improvements to products previously manufactured or sold.

HAZARDOUS MATERIAL DISCLAIMER

The parts/assemblies that are used in this Product are classified as "articles" according to 29 CFR 1910.1200 (C). They are formed to a specific shape or design during manufacture, have end use function dependent upon their shape or design, and do not release any hazardous chemical under normal conditions of use. Accordingly, we are not required to supply Material Safety Data Sheets (MSDS) or to label shipping containers for "articles". However, lubricants, liquids, gaseous chemicals and solids used in operation or maintenance of the product may require that user's take occupational protective measures. MSDS sheets for such materials will be supplied to your Purchasing Manager/ Safety Director to be used in your employee safety training education and environmental health training.

HARSCO RAIL
HARSCO CORPORATION
2401 Edmund Road, Box 20
Cayce-West Columbia, SC 29171-0020 U.S.A.

BULLETIN 5007767 Printed In U.S.A. ISSUED 6 - 2011
REVISION C REVISED 7 - 2012
© 2012 HARSCO CORPORATION, ALL RIGHTS RESERVED