Harsco Track Technologies™
MK VI Tamper
w/Jupiter Control System
Parts Manual

HTT On Track New Zealand

HTT
Harsco Track Technologies
Harsco

Catalog No. 4014305
June, 2007

Harsco Track Technologies ™ is a brand name and trademark of products manufactured by Harsco Track Technologies, an operating unit of Harsco Corporation.

It is the policy of Harsco Track Technologies, an operating unit of Harsco Corporation hereafter referred to as Harsco Track Technologies, to improve our products as new technology, components and hardware becomes available. Harsco Track Technologies reserves the right to change the information in this guide without notice.

Duplication or unauthorized use of this manual and CD is NOT permitted without the written consent of Harsco Track Technologies.

Caution

THIS MANUAL CONTAINS VITAL INFORMATION FOR THE SAFE USE AND EFFICIENT OPERATION OF THIS MACHINE. CAREFULLY READ THE OPERATOR'S MANUAL BEFORE USING THE MACHINE. FAILURE TO ADHERE TO THE INSTRUCTIONS COULD RESULT IN BODILY INJURY AND/OR PROPERTY DAMAGE.

HARSCO TRACK TECHNOLOGIES
2401 EDMUND RD, BOX 20
CAYCE-WEST COLUMBIA, SC
29171-0020
Tel: (803) 822-9160
Fax: (803) 822-8107

HARSCO TRACK TECHNOLOGIES
415 NORTH MAIN STREET
FAIRMONT, MN 56031-1837
Tel: (507) 235-3361
Fax: (507) 235-7370

HARSCO TRACK TECHNOLOGIES
200 SOUTH JACKSON ROAD
LUDINGTON, MICHIGAN 49431
Tel: (231) 843-3431
Fax: (231) 843-4830

HARSCO TRACK TECHNOLOGIES
4 STRATHWYN STREET
P.O. BOX 5287
BRENDALE, QUEENSLAND 4500,
AUSTRALIA
Tel: 61 7 2056500
Fax: 61 7 2057369

HARSCO TRACK TECHNOLOGIES UK
UNIT 1 (Before 20)
CHEWTON STREET
EASTWOOD
NOTTINGHAM
NG16 3HB
UNITED KINGDOM
Tel: +44 (1773) 539 480
Fax: +44 (1773) 539 481

Printed and Produced in the U.S.A

Copyright© 2007 by Harsco Track Technologies

Introduction

About This Manual

This manual is divided into eight (8) major sections. Listed under these major sections are the major assemblies that contain the assembly drawings and the corresponding parts list showing item numbers, descriptions, part numbers, and quantities.

How to Use This Manual

1 . Locate the Table of Contents pages. Then, locate the assembly that contains the item(s) to be replaced. For example, assume you need to replace the Brake Shoes which are located in section called "**DRIVE TRAIN and SUSPENSION**".
2. Determine the appropriate assembly drawing and number containing the needed item. Note, the Brake Shoes are a part of the Front and Rear Axle Assemblies, Drawing No. **4013044** and **4013045.**.
3. Locate the appropriate item number **(17)** on the assembly drawings.
4. Examine the parts list to locate the description **(Brake Shoe)** and part number **(415597)** that corresponds to the part(s) to be replaced.

How to Order a Replacement Part

1 . Determine the correct part number, quantity and description using the procedure described in the previous section.
2. Make sure you have the correct purchase order number and the appropriate shipping and billing addresses.
3. If you want to order replacement parts by mail, the address is:

   Harsco Track Technologies
   HARSCO CORPORATION
   2401 Edmund Rd.
   P. 0. Box 20
   Cayce - West Columbia, SC 29171-0020
   USA
   ATTN: Parts Sales
4. If you want to order replacement parts by telephone, the number is **1-800-345-9160.** Make sure you ask to speak to the Parts Sales Department and make sure you have your purchase order number, bill to address, ship to address, part number(s), and quantity. Also, if possible,

make sure you have the model number and serial number of your machine(s).

5. If you want to FAX the order, the number is **1-803-822-7403**.

TABLE OF CONTENTS

New Zealand MK VI Tamper Parts Manual

Drive Train, and Suspension

4013044 ..... Axle Assembly, Front

4013045 ..... Axle Assembly, Rear

4013046 ..... Wheel and Gearbox Assembly

4013047 ..... Gearbox and Axle Assembly

B5470YAC ..... Carrier Assembly

4013282 ..... Suspension Assembly, Front

4013363 ..... Suspension Assembly, Rear

B6692XAD ..... Drive Shaft Installation

Engine, Transmission and Fuel System

D9684WAE ..... Engine Installation

H3193VAC ..... Engine and Transmission Assembly

B9553PAF..... Engine Assembly (Cummins 8.3 - 260) (Parts List Only)

H5977YAA ..... Throttle Actuator Assembly

G0223WAK ..... Engine Cover Assembly

0-3523010-0-09..... Transmission, Front

G0187WAE ..... Transmission Installation, Rear

G3258Y01 ..... Transmission, Rear

----------..... Transmission Repair Parts

A2584W02 ..... Transmission Start up procedure

H7145XAA ..... Transmission Speed Sensing Kit

4010769 ..... Fuel Tank Installation

Workheads (Tamping)

C0605VAC ..... Workhead and Traverse Assembly
G8032WAL..... Vibrator and W/H Assembly (RH)
G8032WAM ..... Vibrator and W/H Assembly (LH)
G6285WAA ..... Auto Oiler Installation
P753281Y ..... Tamping Tool Kit
A9602XAG ..... Tough Tamping Tool
A9602XAH ..... Tough Tamping Tool
C0607VAA ..... Vibrator Assembly
0-2200082-0-01..... Vibrator Housing Assembly
Y684448-01..... Swivel Bracket Assembly
A4887XAA..... Idler, Traverse

Lifting Clamp and Reference Systems

A7609WAK..... Combo Clamp Installation
4013034 ..... Combo Clamp Frame Assembly
4013389 ..... Buggy and Spacer Bar Assembly
4013399 ..... Projector Buggy Assembly
0-2201452-0-01..... Wheel Assembly
A6830YAA..... Pusher Bar
4013390 ..... Pusher Buggy Assembly
4013395 ..... Pusher Buggy Assembly
0-2100861-0-10..... Projector Assembly, Surface/Liner
4013396 ..... Recorder Buggy Assembly
4013600 ..... Buggy Lift System
4013684 ..... Laser Liner Kit (42"Ga)
4013603 ..... Bias Wheel Assembly
4013420 ..... Shadowboard Installation
A0219WAA..... Wheel Assembly
A0219WAB..... Wheel Assembly
0-2303638-0-03..... Gimbel Assembly

Lifting Clamp and Reference System Cont'd.

4009960 ..... Shadowboard Light Shield
A0978WAD ..... Flag Arm Assembly Liner RH
C0046XAC ..... Linear Actuator Assembly
A0978WAC ..... Flag Arm Assembly, Liner LH
4013052 ..... Receiver Buggy Installation
4007012 ..... Double Barrel Receiver Assembly
D4713XAB ..... Linear Actuator Assembly
A7762WAA..... Light Shields Assembly
G9426WAK ..... Encoder Installation
G9427WAL..... Carriage and Wheel Assembly

Hydraulic System and Components

4013194 ..... Hydraulic Interconnect
C9094XAB ..... Pump Control Valve Assembly
C9087VAB ..... Jack (Regen) Valve Assembly
C9112VAD ..... Bias and Clamp Valve Assembly
C9104VAC ..... Liner and Clamp Valve Assembly
G2139WAB ..... Workhead Valve Assembly
C9095WAE ..... Traction Valve Assembly
G2130WAB ..... Squeeze Valve Assembly
G0686XAE ..... Traction Disconnect Align Valve Assembly
C7417XAA ..... Buggy Lift Valve Assembly
C9090XAA ..... Axle Lockout Valve Assembly, Front
C9102WAA ..... Workhead Traverse Valve Assembly
4010827 ..... Hydraulic Tank Installation
G0651WAA ..... Hydraulic Tank Assembly
C8563WAC ..... Emergency Pump Installation
4014003 ..... Hydraulic Schematic
G3371WAA ..... Hose Support Spring Assembly
4011115 ..... Oil Cooler Assembly

Pneumatic System and Components

4013196 ..... Pneumatic Components
4014004 ..... Pneumatic Schematic
C7786XAC ..... Spline Engage Valve Assembly
C8904XAB ..... Air Drain Installation
C7786XAB ..... Index Brake Valve Assembly
C7788XAA ..... Shadowboard Valve Assembly
H3416XAA ..... Air Disconnect Installation
C9785X15 ..... Air Dryer/Purge Tank Kit

Electrical System and Components

4013199 ..... General Electric Assembly
4013210 ..... Master Control Box (MCB) Assembly
4013876 ..... Master Control Box (MCB) Wiring
4013837 ..... Power Distribution Box (PDB) Assembly
4013838 ..... Power Distribution Box (PDB) Wiring
4013841 ..... Cable Diagram
4013198 ..... Electrical Schematic
D1139WAC ..... Laser Battery Charger

Cab and Components

4009525 ..... Cab Installation
4013200 ..... Cab Assembly
4013211 ..... Engine Control Panel (ECP) Assembly
4013840 ..... Engine Control Panel Wiring
4009667 ..... Seat Console Installation
C5363WAK ..... Foot Switch Assembly
4004899 ..... Seat Stand
H7278WAA ..... Left Arm Console Assembly
H7279W01 ..... Left Arm Console Wiring
H1698WAF..... Left Nameplate Assembly

Cab and Components Cont'd

H1825WAC ..... Left Keypad Assembly

H7280WAA ..... Right Arm Console Assembly

4014436 ..... Right Arm Console Wiring

H5088WAA ..... RH Nameplate Assembly

H1826WAB ..... Right Keypad Assembly

H3671WAA ..... Hydraulic Air Conditioner Installation

MK VI TAMPER
INDEX OF SECTIONS

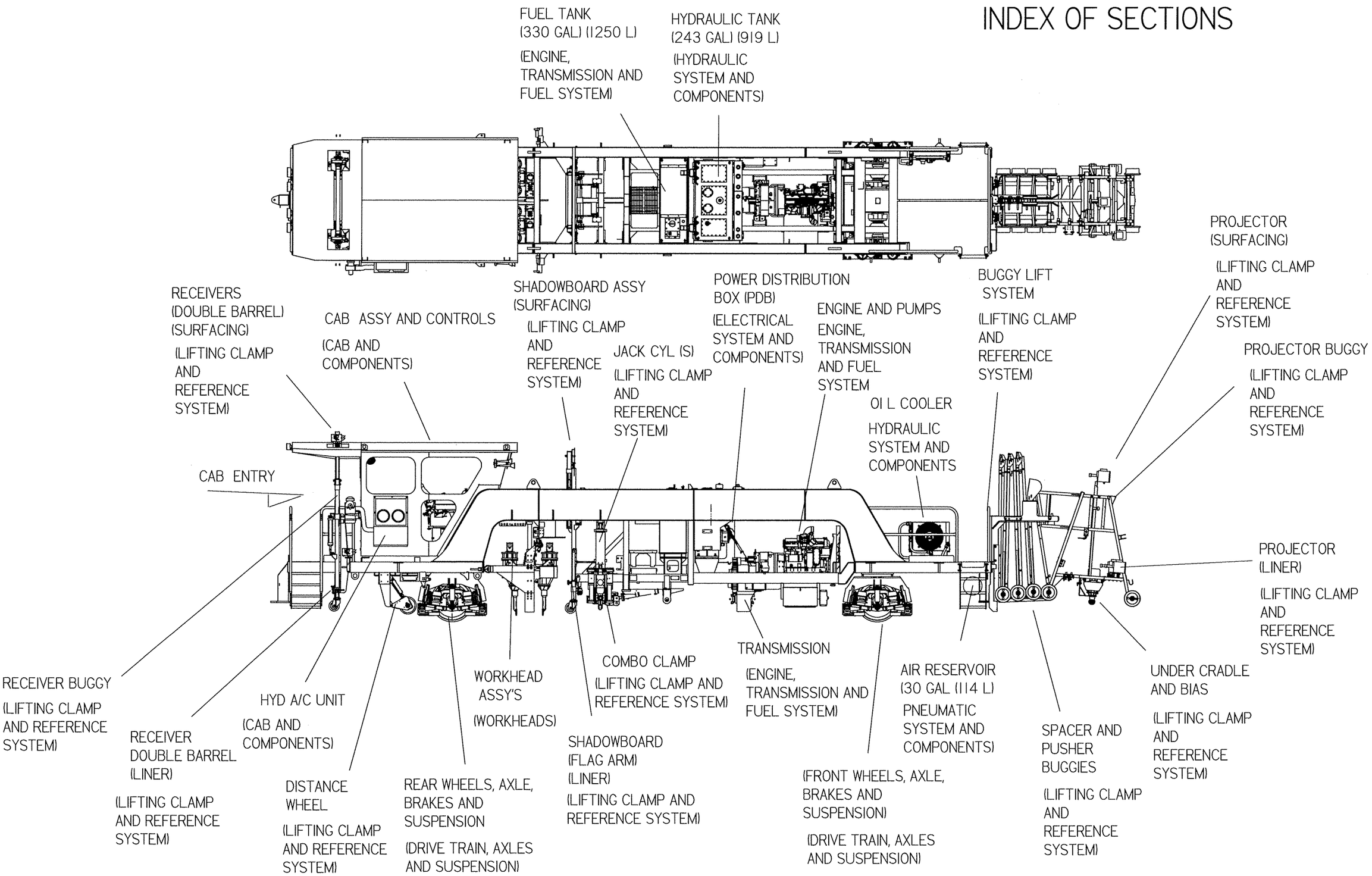

MK VI TAMPER
PHYSICAL DATA

FLUID CAPACITIES

HYDRAULIC TANK 919 L (243 GAL)
FUEL TANK 1250 L (330 GAL)

GAUGE: 42 INCHES (1067 MM)

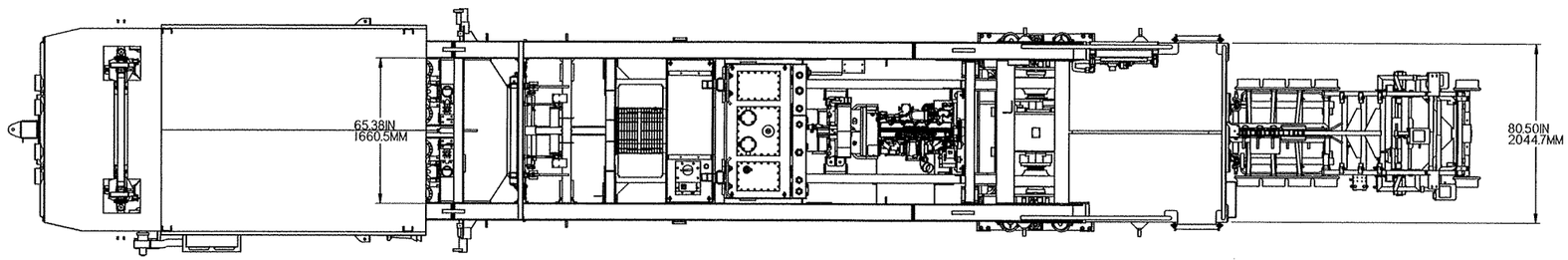

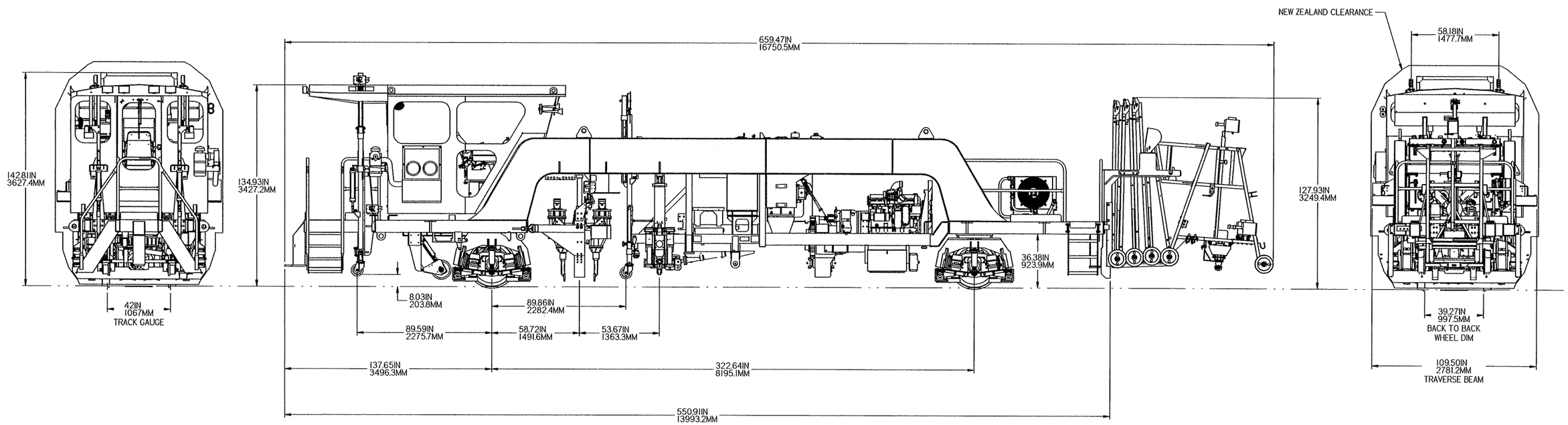

ESTIMATED WEIGHT = 75,000 POUNDS

CONFIDENTIAL
© COPYRIGHT 2001 HARSCO TRACK TECHNOLOGIES. THIS DRAWING OR DOCUMENT IS THE PROPERTY OF HARSCO TRACK TECHNOLOGIES AND EMBODIES CONFIDENTIAL INFORMATION, TRADE SECRET INFORMATION, AND/OR KNOW-HOW THAT IS THE PROPERTY OF HARSCO TRACK TECHNOLOGIES. BY ACCEPTING THIS DRAWING OR DOCUMENT, THE RECIPIENT AGREES (1) NOT TO PROVIDE, OR OTHERWISE MAKE AVAILABLE, THE DRAWING OR DOCUMENT, OR ANY INFORMATION OR KNOW-HOW EMBODIED THEREIN, TO ANY THIRD PARTY AND (2) NOT TO REPRODUCE OR USE THE DRAWING OR DOCUMENT TO MANUFACTURE ANY APPARATUS OR DEVICE, WITHOUT THE PRIOR WRITTEN AUTHORIZATION OF HARSCO TRACK TECHNOLOGIES.

SOLID EDGE DRAWING

IMPLIED TOLERANCES
ALL DIMENSIONS ARE IN INCHES - TOLERANCE UNLESS OTHERWISE SPECIFIED

NOMINAL SIZE RANGE		INCH PLUS OR MINUS		NOMINAL SIZE RANGE		METRIC PLUS OR MINUS	
OVER	TO	2 PLACE DECIMAL	3 PLACE DECIMAL	OVER	TO	1 PLACE DECIMAL	2 PLACE DECIMAL
0	6	.03	.005	0	150	.8	.127
6	24	.04	.008	150	600	1.0	.203
24	-	.06	.010	-	600	1.5	.254

UNLESS OTHERWISE SPECIFIED ALL MACHINED SURFACES WILL HAVE A SURFACE FINISH OF 125 MICROINCHES ANGULAR TOLERANCE OF ± 30' CONCENTRICITY WITHIN .015

THIRD ANGLE PROJECTION

UNLESS OTHERWISE SPECIFIED ALL WELDS SHOULD ADHERE TO THE LATEST HTT WELDING SPECIFICATION 101

CHANGE	R/L	REVISION	DATE
10****	A	NEW RELEASE	-/-/07

Description: MBOM MK VI NEW ZEALAND
Drawing Number: ----------
Machine Type: MK VI NZ 42
Model: 4013043.asm
Drawn: jrowell
Date Drawn: -/-/07
Weight: 0.0 lbm
Scale: ---
APVD Dwg: ---
APVD Chkg: ---
Mat'l:

HTT
Harsco Track Technologies
Harsco
Columbia, SC

Part Number: 4013043
Size: D
Sheet: 1 of 1

Plotted by jrowell on 5/4/2007 4013043_general_arrangement.dft

Drive Train and Suspension

ITEM No	PART NUMBER	DESCRIPTION	QTY
1	4013046	WHEEL, AXLE & GEARBOX ASSY	1
2	L40273	1/4-28 GREASE FITTING	8
3	0-1011027-0-01	BRAKE HEAD	4
4	0-1306629-0-01	INSULATION WASHER	8
5	0-1404558-0-01	INSULATION BUSHING	4
6	0-3014001-0-10	CLEVIS W/PIN	4
7	0-3551007-0-02	BRAKE CHAMBER (FAIL SAFE)	4
8	0-3683002-0-01	BRAKE SHOE KEY	4
9	4-3016012-0-08	3/4-10 X 2 HHCS GR. 8	4
10	4-3016022-0-03	5/8-11 X 2 1/2 HHCS (NYLOC)	16
11	0-3015002-0-22	CLEVIS PIN	4
12	4013258	DERAIL SKID WLDT	2
13	4013264	PIN W/ HOLES 1 1/2 DIA	4
14	4013265	BRAKE CHANNEL	2
15	4013269	BRAKE ARM WLDT	2
16	4013271	BRAKE ARM WLDT	2
17	415597	BRAKE SHOE	4
18	A0036226	3/4-10 X 4 HHCS GR. 5	16
19	A0038071	1-8 X 3 1/2 HHCS GR 8	8
20	A0041168	1-8 X 5 SOC HD CAP SCR	4
21	A0041184	1-8 X3 1/4 SOC HD CAP SCR	4
22	A0056011	5/8-18 HEX JAM NUT	4
23	A0059012	1 1/2 FLAT WASHER MED.	16
24	A0059017	5/8 PLAIN WASHER	24
25	A0061052	1" HI COLLAR LOCK WASHER	8
26	A0068031	COTTER PIN 1/4 X 2 1/4	8
27	A6635X01	LINER BLOCK (MACH)	2
28	B5624Y01	SHIM, SIDE (18GA THK)	12
29	B5624Y02	SHIM, SIDE (12GA THK)	8
30	B5682Y01	SHIM, BOTTOM (24 GA)	12
31	B5682Y02	SHIM, BOTTOM (16 GA)	8
32	B6118Y01	BEARING ADAPTER REWORK	2
33	B7129VAB	WMENT, SUSP. BLOCK	2
34	C1244X01	AXLE RETAINER	2
35	C1297Y01	REACTION PLATE	2

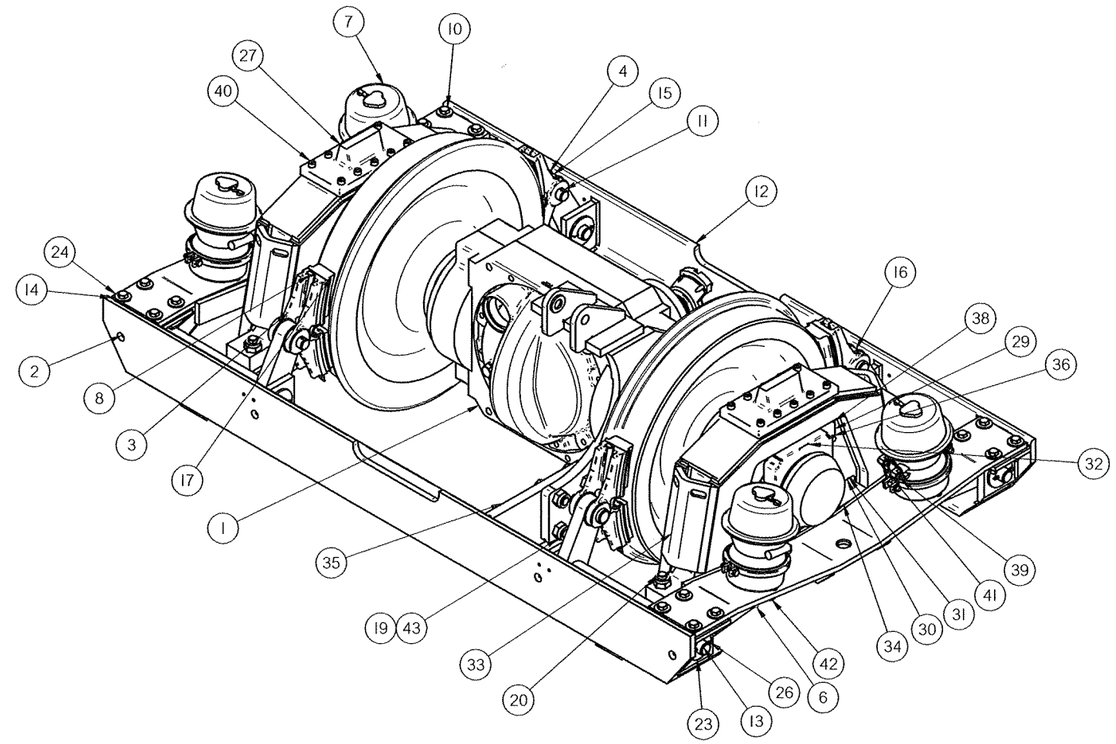

ITEM No	PART NUMBER	DESCRIPTION	QTY
36	F001025	WASHER, 3/8, LOCK, MEDIUM PLATED	16
37	F001354	3/4 MEDIUM PLATED LOCK WASHER	16
38	F006917	DC-HHCS 3/8-16X7/8GR5	16
39	F012055	3/8 MP - 3/8 JIC Adapter 90	4
40	F012078	1/2-13 x 1 3/4 SOC HD CS	20
41	F015104	ADAPTER, 3/8 MP - 1/4 JIC 90 DEG	4
42	L41032	LOCKNUT, 5/8, HEX, HEAVY, THIN	24
43	L425515	LOCKNUT, 1-8, HEX, HEAVY, THIN	12

MARK VI
1067 mm GAUGE (42 in)
INSULATED
4.88:1 AXLE RATIO
NEW ZEALAND WHEEL
PROFILE

SOLID EDGE DRAWING

CONFIDENTIAL
© COPYRIGHT 2001 HARSCO TRACK TECHNOLOGIES. THIS DRAWING OR DOCUMENT IS THE PROPERTY OF HARSCO TRACK TECHNOLOGIES AND EMBODIES CONFIDENTIAL INFORMATION, TRADE SECRET INFORMATION, AND/OR KNOW-HOW THAT IS THE PROPERTY OF HARSCO TRACK TECHNOLOGIES. BY ACCEPTING THIS DRAWING OR DOCUMENT, THE RECIPIENT AGREES (1) NOT TO PROVIDE, OR OTHERWISE MAKE AVAILABLE, THE DRAWING OR DOCUMENT, OR ANY INFORMATION OR KNOW-HOW EMBODIED THEREIN, TO ANY THIRD PARTY AND (2) NOT TO REPRODUCE OR USE THE DRAWING OR DOCUMENT TO MANUFACTURE ANY APPARATUS OR DEVICE, WITHOUT THE PRIOR WRITTEN AUTHORIZATION OF HARSCO TRACK TECHNOLOGIES.

IMPLIED TOLERANCES
ALL DIMENSIONS ARE IN INCHES - TOLERANCE UNLESS OTHERWISE SPECIFIED

NOMINAL SIZE RANGE		INCH PLUS OR MINUS		NOMINAL SIZE RANGE		METRIC PLUS OR MINUS	
OVER	TO	2 PLACE DECIMAL	3 PLACE DECIMAL	OVER	TO	1 PLACE DECIMAL	2 PLACE DECIMAL
0	6	.03	.005	0	150	.8	.127
6	24	.04	.008	150	600	1.0	.203
24	-	.06	.010	-	600	1.5	.254

UNLESS OTHERWISE SPECIFIED ALL MACHINED SURFACES WILL HAVE:
A SURFACE FINISH OF 125 MICRO-INCHES
ANGULAR TOLERANCE OF ± 30'
CONCENTRICITY WITHIN .010

THIRD ANGLE PROJECTION

UNLESS OTHERWISE SPECIFIED ALL WELDS SHOULD ADHERE TO THE LATEST HTT WELD ING SPECIFICATION HS

CHANGE	R/L	REVISION	DATE
100956	A	NEW RELEASE	2/26/07
100975	B	ADD ITEMS 2 - 43 & SHEET 2	7 Mar 07

Description: AXLE ASSY FRONT
Drawing Number: ----------
Machine Type: MARK VI
Model: 4013044.asm
Weight: 5248.9 lbm
Scale:
Mat'l: - -
Drawn: lrowell
Date Drawn: 2/26/07
APVD Dsg: JO'C
APVD Chkg: JO'C

HTT
Harsco Track Technologies
Harsco
Columbia, SC

Part Number: 4013044
Size: D
Sheet: 1 of 2

Plotted by mtollefson on 5/17/2007 4013044.dft

NOTES:
1 WELD ITEM 35 AFTER BOLTING TO ITEM 1
2 AXLE ASSY MUST BE LEVEL BEFORE WELDIG

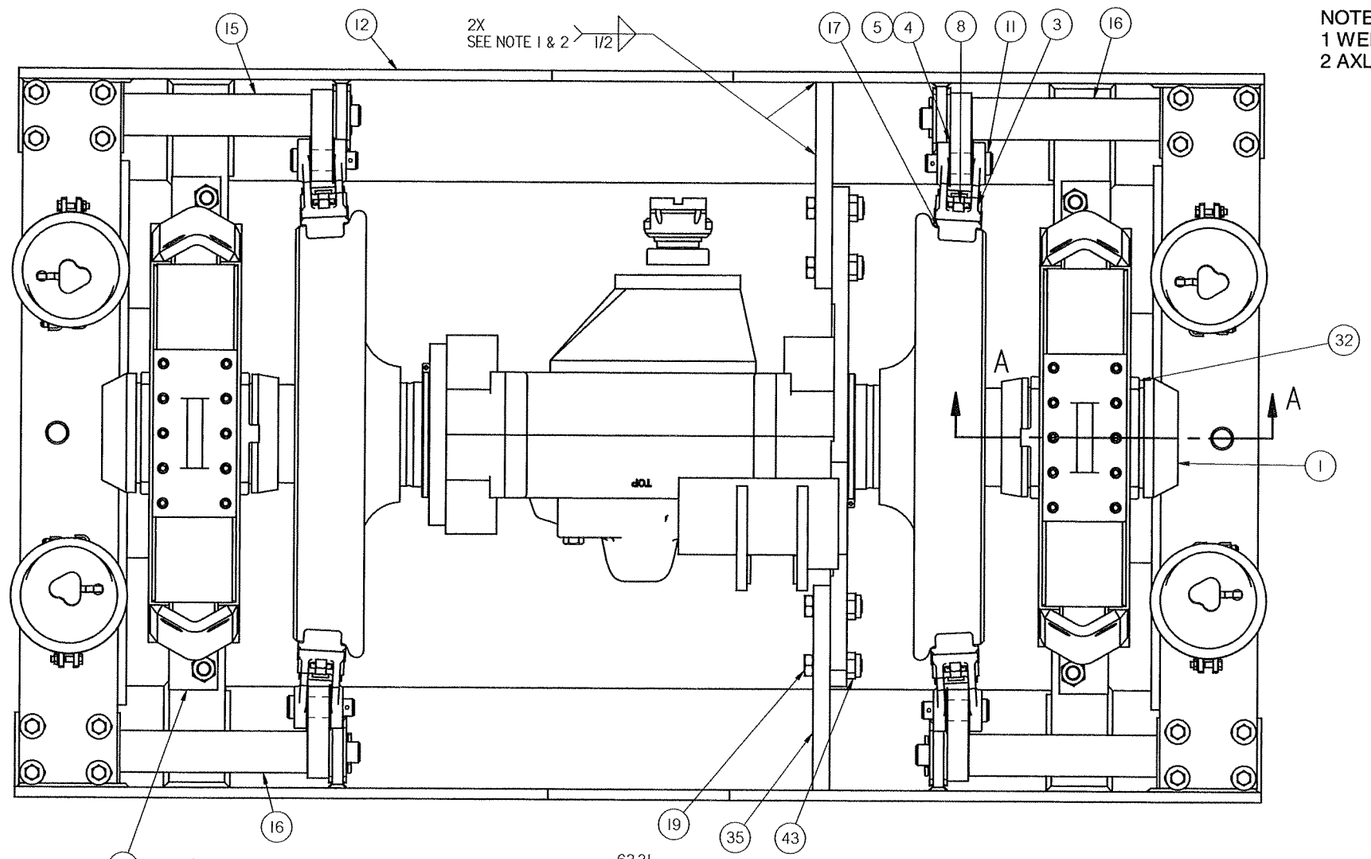

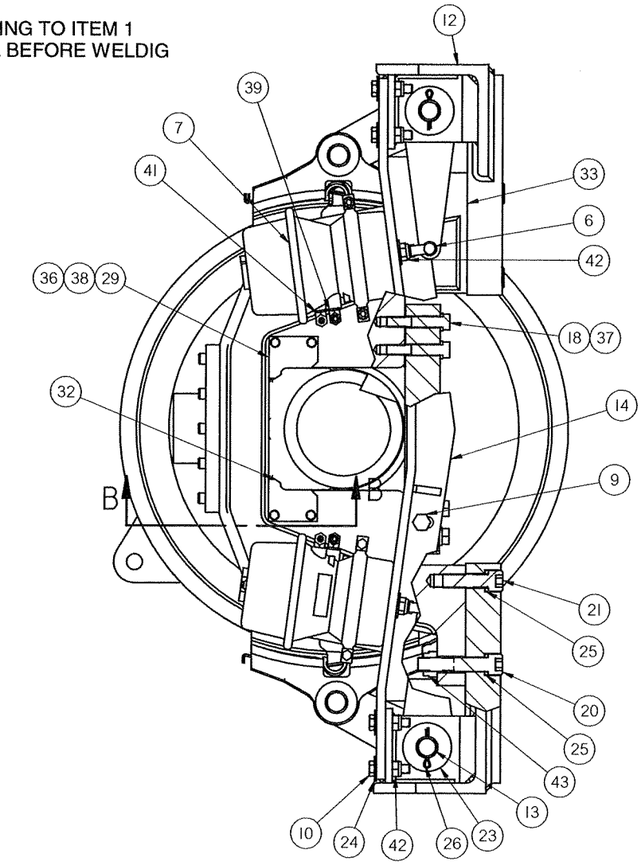

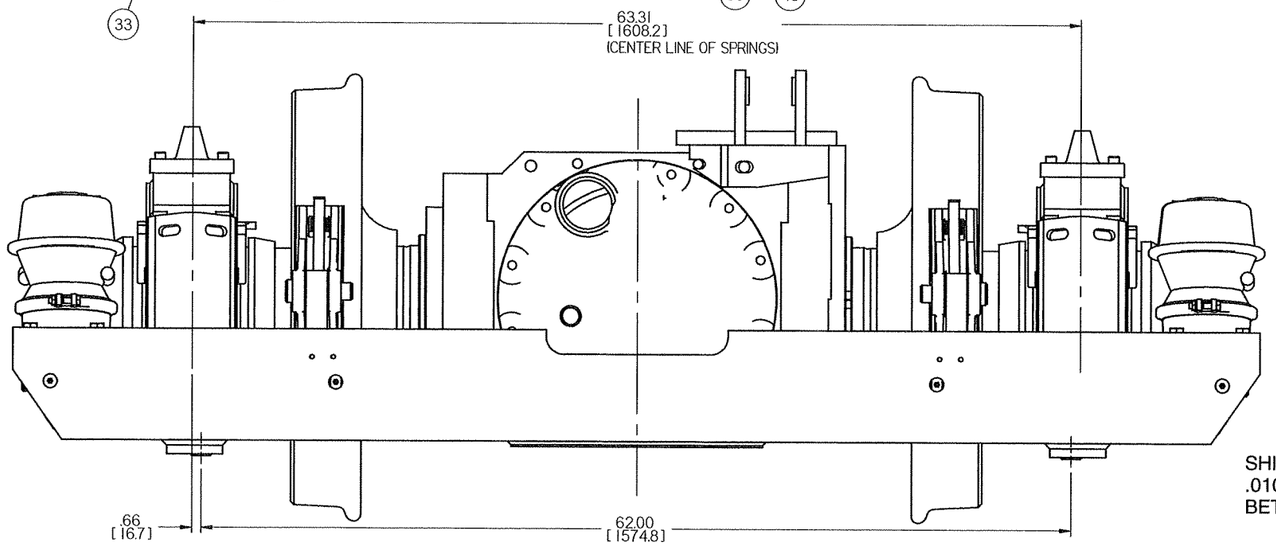

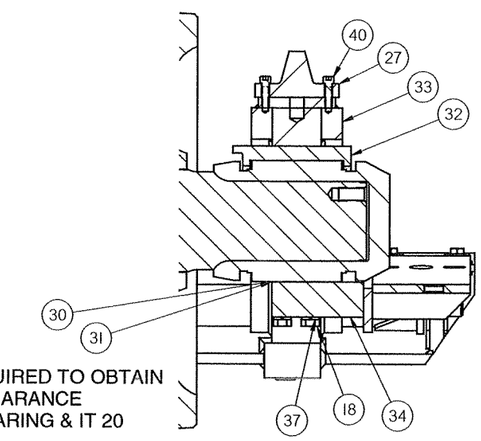

SHIM AS REQUIRED TO OBTAIN
.010 - .030 CLEARANCE
BETWEEN BEARING & IT 20

SECTION A-A

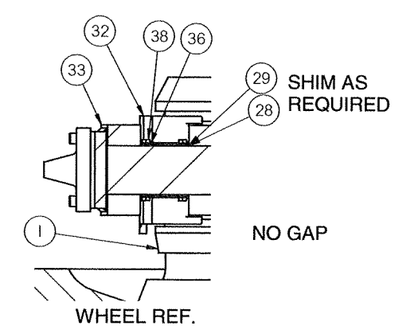

SECTION B-B

CONFIDENTIAL
© COPYRIGHT 2001 HARSCO TRACK TECHNOLOGIES. THIS DRAWING OR DOCUMENT IS THE PROPERTY OF HARSCO TRACK TECHNOLOGIES AND EMBODIES CONFIDENTIAL INFORMATION, TRADE SECRET INFORMATION, AND/OR KNOW-HOW THAT IS THE PROPERTY OF HARSCO TRACK TECHNOLOGIES. BY ACCEPTING THIS DRAWING OR DOCUMENT, THE RECIPIENT AGREES (1) NOT TO PROVIDE, OR OTHERWISE MAKE AVAILABLE THE DRAWING OR DOCUMENT, OR ANY INFORMATION OR KNOW-HOW EMBODIED THEREIN, TO ANY THIRD PARTY AND (2) NOT TO REPRODUCE OR USE THE DRAWING OR DOCUMENT TO MANUFACTURE ANY APPARATUS OR DEVICE, WITHOUT THE PRIOR WRITTEN AUTHORIZATION OF HARSCO TRACK TECHNOLOGIES.

SOLID EDGE DRAWING

IMPLIED TOLERANCES
ALL DIMENSIONS ARE IN INCHES - TOLERANCE UNLESS OTHERWISE SPECIFIED

NOMINAL SIZE RANGE OVER	TO	INCH PLUS OR MINUS 2 PLACE DECIMAL	3 PLACE DECIMAL	NOMINAL SIZE RANGE OVER	TO	METRIC PLUS OR MINUS 1 PLACE DECIMAL	2 PLACE DECIMAL
0	6	.03	.005	0	150	.8	.127
6	24	.04	.008	150	600	1.0	.203
24	-	.06	.010	-	600	1.5	.254

UNLESS OTHERWISE SPECIFIED ALL MACHINED SURFACES WILL HAVE:
A SURFACE FINISH OF 125 MICROINCHES
AN ANGULAR TOLERANCE OF ± .50°
CONCENTRICITY WITHIN .010

THIRD ANGLE PROJECTION

UNLESS OTHERWISE SPECIFIED ALL WELDS SHOULD ADHERE TO THE LATEST HTT WELDING SPECIFICATION 101

CHANGE	R/L	REVISION	DATE
100956	A	NEW RELEASE	2/26/07
100975	B	ADD ITEMS 2 - 43 & SHEET 2	7 Mar 07

Description: AXLE ASSY FRONT
Drawing Number: ----------
Machine Type: MARK VI
Model: 4013044.asm
Drawn: jrowell
Date Drawn: 2/26/07
Weight: 5248.9 lbm
Scale:
APVD Dwg: JO'C
APVD Dtlng: JO'C
Mat'l: - -

HTT
Harsco Track Technologies
Harsco
Columbia, SC

Part Number: 4013044
Size: D
Sheet: 2 of 2

Plotted by mtollefson on 5/17/2007 4013044.dft

ITEM No	PART NUMBER	DESCRIPTION	QTY
1	4013046	WHEEL, AXLE & GEARBOX ASSY	1
2	L40273	1/4-28 GREASE FITTING	8
3	0-1011027-0-01	BRAKE HEAD	4
4	0-1306629-0-01	INSULATION WASHER	8
5	0-1404558-0-01	INSULATION BUSHING	4
6	0-3014001-0-10	CLEVIS W/PIN	4
7	0-3551007-0-02	BRAKE CHAMBER (FAIL SAFE)	4
8	0-3683002-0-01	BRAKE SHOE KEY	4
9	4-3016012-0-08	3/4-10 X 2 HHCS GR. 8	4
10	4-3016022-0-03	5/8-11 X 2 1/2 HHCS (NYLOC)	16
11	0-3015002-0-22	CLEVIS PIN	4
12	4013258	DERAIL SKID WLDT	2
13	4013264	PIN W/ HOLES 1 1/2 DIA	4
14	4013265	BRAKE CHANNEL	2
15	4013269	BRAKE ARM WLDT	2
16	4013271	BRAKE ARM WLDT	2
17	415597	BRAKE SHOE	4
18	A0036226	3/4-10 X 4 HHCS GR. 5	16
19	A0038071	1-8 X 3 1/2 HHCS GR 8	8
20	A0041168	1-8 X 5 SOC HD CAP SCR	4
21	A0041184	1-8 X3 1/4 SOC HD CAP SCR	4
22	A0056011	5/8-18 HEX JAM NUT	4
23	A0059012	1 1/2 FLAT WASHER MED.	16
24	A0059017	5/8 PLAIN WASHER	24
25	A0061052	1" HI COLLAR LOCK WASHER	8
26	A0068031	COTTER PIN 1/4 X 2 1/4	8
27	A6613X01	LINER BLOCK (MACH)	2
28	B5624Y01	SHIM, SIDE (18GA THK)	12
29	B5624Y02	SHIM, SIDE (12GA THK)	8
30	B5682Y01	SHIM, BOTTOM (24 GA)	12
31	B5682Y02	SHIM, BOTTOM (16 GA)	8
32	B6118Y01	BEARING ADAPTER REWORK	2
33	B7129VAB	WMENT, SUSP. BLOCK	2
34	C1244X01	AXLE RETAINER	2
35	C1297Y01	REACTION PLATE	2

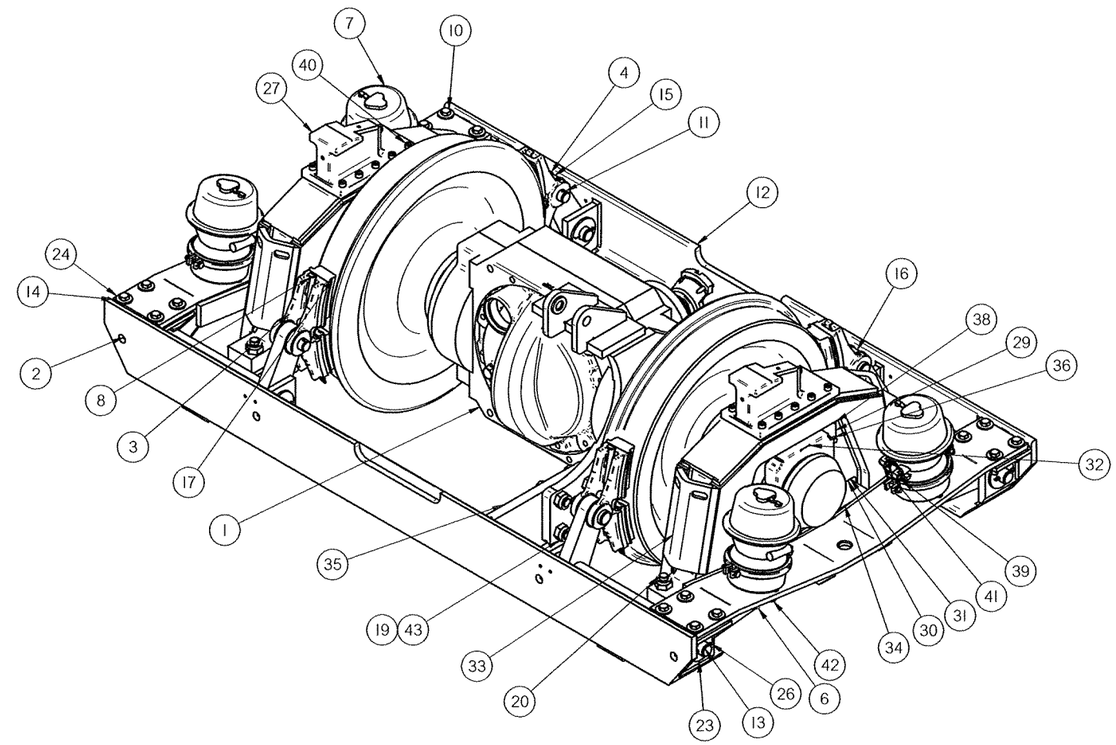

ITEM No	PART NUMBER	DESCRIPTION	QTY
36	F001025	WASHER, 3/8, LOCK, MEDIUM PLATED	16
37	F001354	3/4 MEDIUM PLATED LOCK WASHER	16
38	F006917	DC-HHCS 3/8-16X7/8GR5	16
39	F012055	3/8 MP - 3/8 JIC Adapter 90	4
40	F012078	1/2-13 x 1 3/4 SOC HD CS	20
41	F015104	ADAPTER, 3/8 MP - 1/4 JIC 90 DEG	4
42	L41032	LOCKNUT, 5/8, HEX, HEAVY, THIN	24
43	L425515	LOCKNUT, 1-8, HEX, HEAVY, THIN	12

MARK VI
1067 mm GAUGE (42 in)
INSULATED
4.88:1 AXLE RATIO
NEW ZEALAND WHEEL
PROFILE

CONFIDENTIAL
© COPYRIGHT 2001 HARSCO TRACK TECHNOLOGIES. THIS DRAWING OR DOCUMENT IS THE PROPERTY OF HARSCO TRACK TECHNOLOGIES AND EMBODIES CONFIDENTIAL INFORMATION, TRADE SECRET INFORMATION, AND/OR KNOW-HOW THAT IS THE PROPERTY OF HARSCO TRACK TECHNOLOGIES. BY ACCEPTING THIS DRAWING OR DOCUMENT, THE RECIPIENT AGREES (1) NOT TO PROVIDE, OR OTHERWISE MAKE AVAILABLE, THE DRAWING OR DOCUMENT, OR ANY INFORMATION OR KNOW-HOW EMBODIED THEREIN, TO ANY THIRD PARTY AND (2) NOT TO REPRODUCE OR USE THE DRAWING OR DOCUMENT TO MANUFACTURE ANY APPARATUS OR DEVICE, WITHOUT THE PRIOR WRITTEN AUTHORIZATION OF HARSCO TRACK TECHNOLOGIES.

SOLID EDGE DRAWING

IMPLIED TOLERANCES
ALL DIMENSIONS ARE IN INCHES - TOLERANCE UNLESS OTHERWISE SPECIFIED

NOMINAL SIZE RANGE OVER	TO	INCH PLUS OR MINUS 2 PLACE DECIMAL	3 PLACE DECIMAL	NOMINAL SIZE RANGE OVER	TO	METRIC PLUS OR MINUS 1 PLACE DECIMAL	2 PLACE DECIMAL
0	6	.03	.005	0	150	.8	.127
6	24	.04	.008	150	600	1.0	.203
24	-	.06	.010	-	600	1.5	.254

UNLESS OTHERWISE SPECIFIED ALL MACHINED SURFACES WILL HAVE:
A SURFACE FINISH OF 125 MICROINCHES
ANGULAR TOLERANCE OF ± .50°
CONCENTRICITY WITHIN .010

THIRD ANGLE PROJECTION

UNLESS OTHERWISE SPECIFIED ALL WELDS SHOULD ADHERE TO THE LATEST HTT WELD INS SPECIFICATION 101

CHANGE	R/L	REVISION	DATE
100956	A	NEW RELEASE	2/26/07
100975	B	ADD ITEMS 2 - 43 & SHEET 2	7 Mar 07

Description: AXLE ASSY REAR
Drawing Number: ----------
Machine Type: MARK VI
Model: 4013045.asm
Weight: 5248.9 lbm
Scale:
Drawn: mtollefson 2/26/07
APVD Dwg: JO'C
Size Drawn: 2/26/07
APVD ChEng: JO'C
Mat'l: - -

HTT
Harsco Track Technologies
Harsco
Columbia, SC

Part Number: 4013045
Size: D
Sheet: 1 of 2

Plotted by mtollefson on 6/20/2007 4013045.dft

NOTES:
1 WELD ITEM 35 AFTER BOLTING TO ITEM 1.
2 AXLE ASSY MUST BE LEVEL BEFORE WELDING

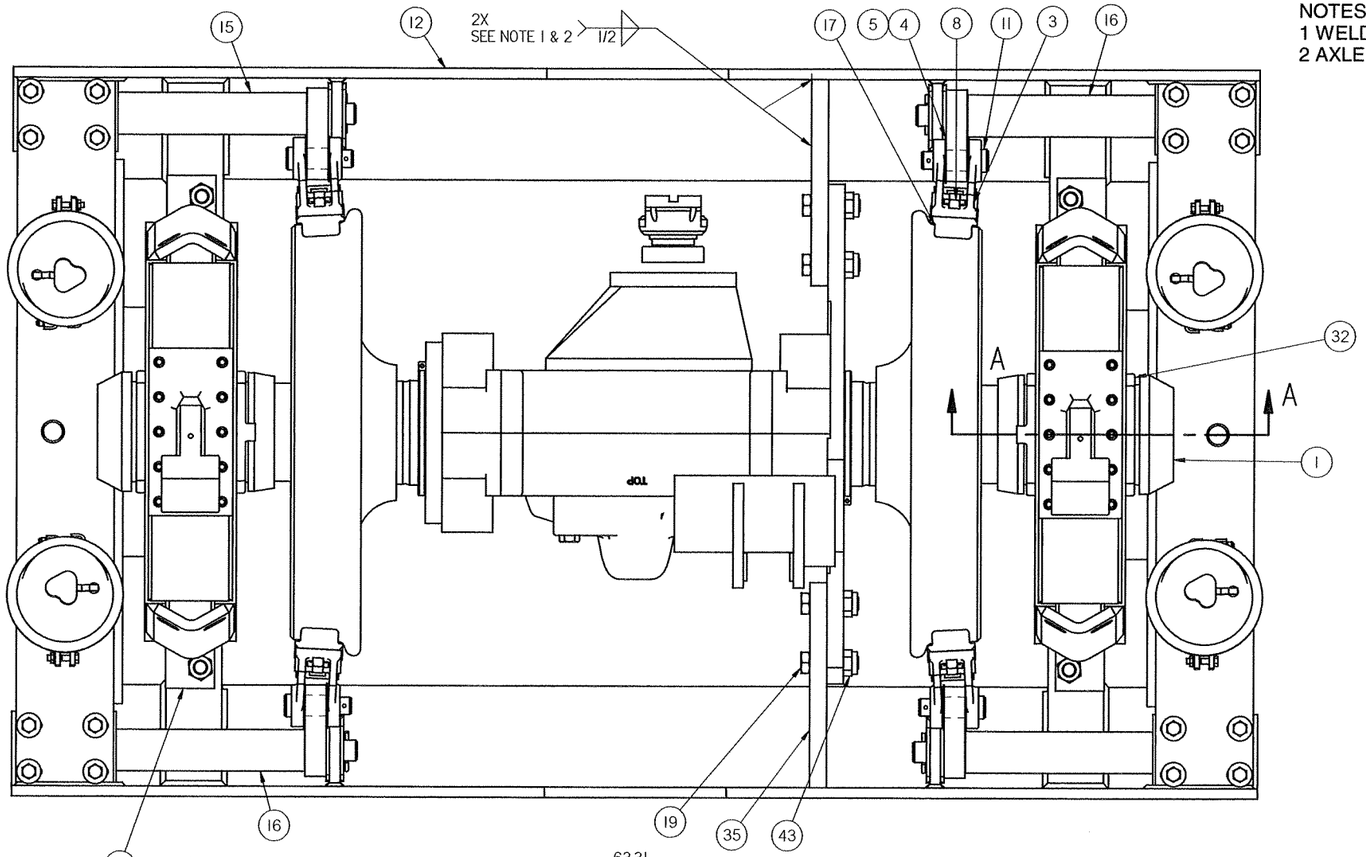

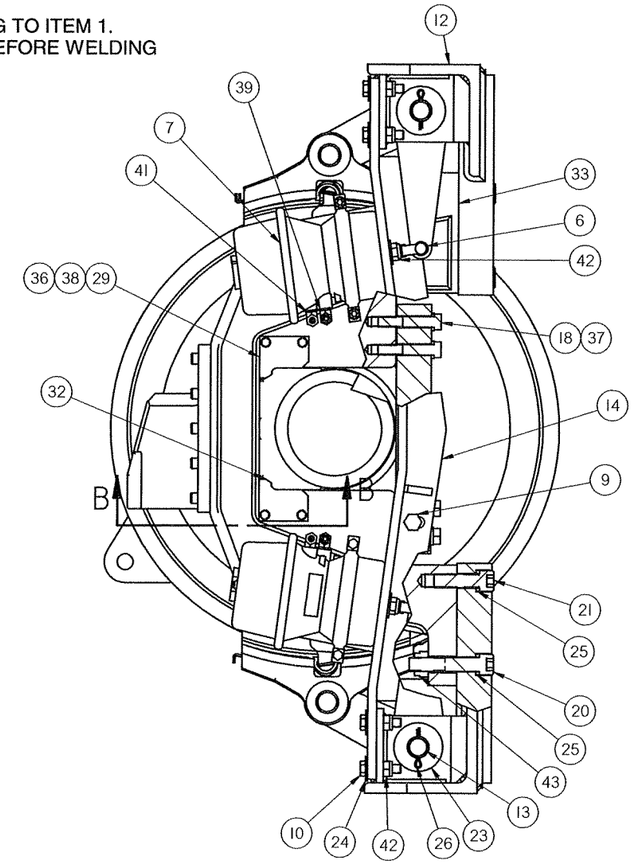

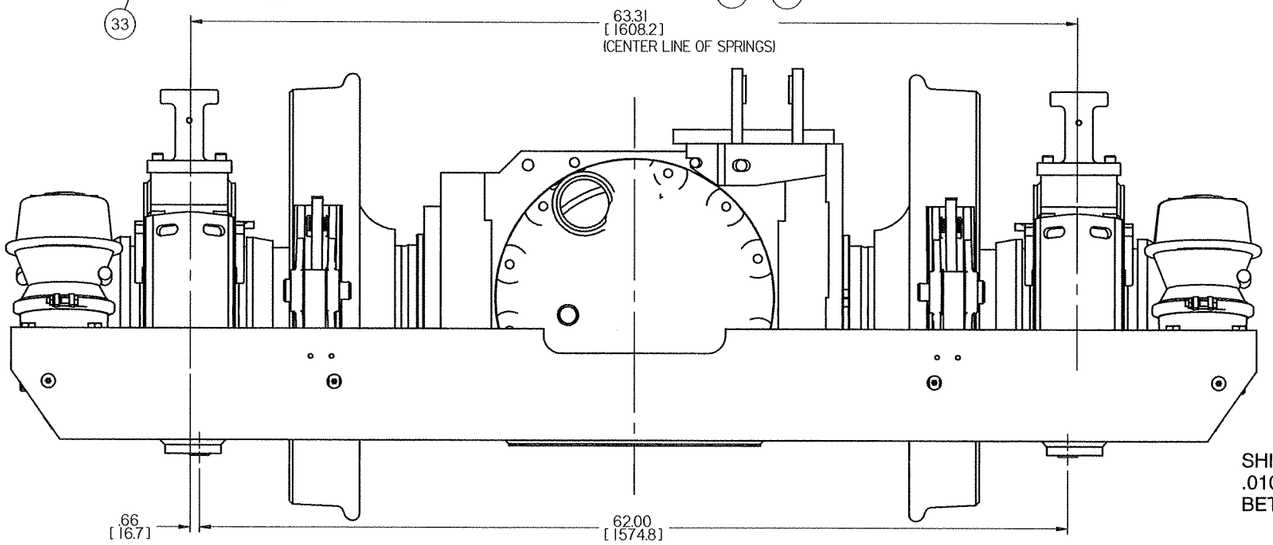

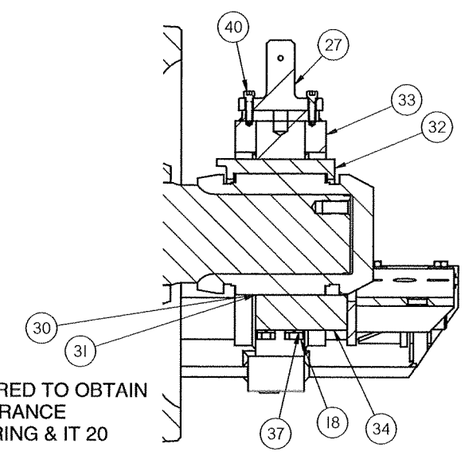

SHIM AS REQUIRED TO OBTAIN
.010 - .030 CLEARANCE
BETWEEN BEARING & IT 20

SECTION A-A

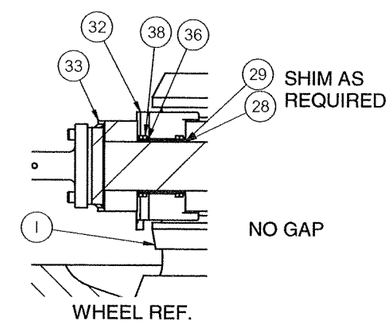

SECTION B-B

CONFIDENTIAL
© COPYRIGHT 2001 HARSCO TRACK TECHNOLOGIES. THIS DRAWING OR DOCUMENT IS THE PROPERTY OF HARSCO TRACK TECHNOLOGIES AND EMBODIES CONFIDENTIAL INFORMATION, TRADE SECRET INFORMATION, AND/OR KNOW-HOW THAT IS THE PROPERTY OF HARSCO TRACK TECHNOLOGIES. BY ACCEPTING THIS DRAWING OR DOCUMENT, THE RECIPIENT AGREES (1) NOT TO PROVIDE, OR OTHERWISE MAKE AVAILABLE, THE DRAWING OR DOCUMENT, OR ANY INFORMATION OR KNOW-HOW EMBODIED THEREIN, TO ANY THIRD PARTY AND (2) NOT TO REPRODUCE OR USE THE DRAWING OR DOCUMENT TO MANUFACTURE ANY APPARATUS OR DEVICE, WITHOUT THE PRIOR WRITTEN AUTHORIZATION OF HARSCO TRACK TECHNOLOGIES.

SOLID EDGE DRAWING

IMPLIED TOLERANCES
ALL DIMENSIONS ARE IN INCHES - TOLERANCE UNLESS OTHERWISE SPECIFIED

NOMINAL SIZE RANGE	INCH PLUS OR MINUS			NOMINAL SIZE RANGE	METRIC PLUS OR MINUS		
OVER	TO	2 PLACE DECIMAL	3 PLACE DECIMAL	OVER	TO	1 PLACE DECIMAL	2 PLACE DECIMAL
0	6	.03	.005	0	150	.8	.127
6	24	.04	.008	150	600	1.0	.203
24	-	.06	.010	-	600	1.5	.254

UNLESS OTHERWISE SPECIFIED ALL MACHINED SURFACES WILL HAVE A SURFACE FINISH OF 125 MICROINCHES ANGULAR TOLERANCE OF ± .50° CONCENTRICITY WITHIN .010

THIRD ANGLE PROJECTION

UNLESS OTHERWISE SPECIFIED ALL WELDS SHOULD ADHERE TO THE LATEST NTT WELD INS SPECIFICATION 101

CHANGE	R/L	REVISION	DATE
100956	A	NEW RELEASE	2/26/07
100975	B	ADD ITEMS 2 - 43 & SHEET 2	7 Mar 07

Description: AXLE ASSY REAR
Drawing Number: ----------
Machine Type: MARK VI
Model: 4013045.asm
Drawn: mtollefson 2/26/07
Weight: 5248.9 lbm
Scale:
APVD Dwg: JO'C
APVD Chng: JO'C
Part Number: 4013045
Size: D
Sheet: 2 of 2

HTT
Harsco Track Technologies
Harsco
Columbia, SC

Plotted by mtollefson on 6/20/2007 4013045.dft

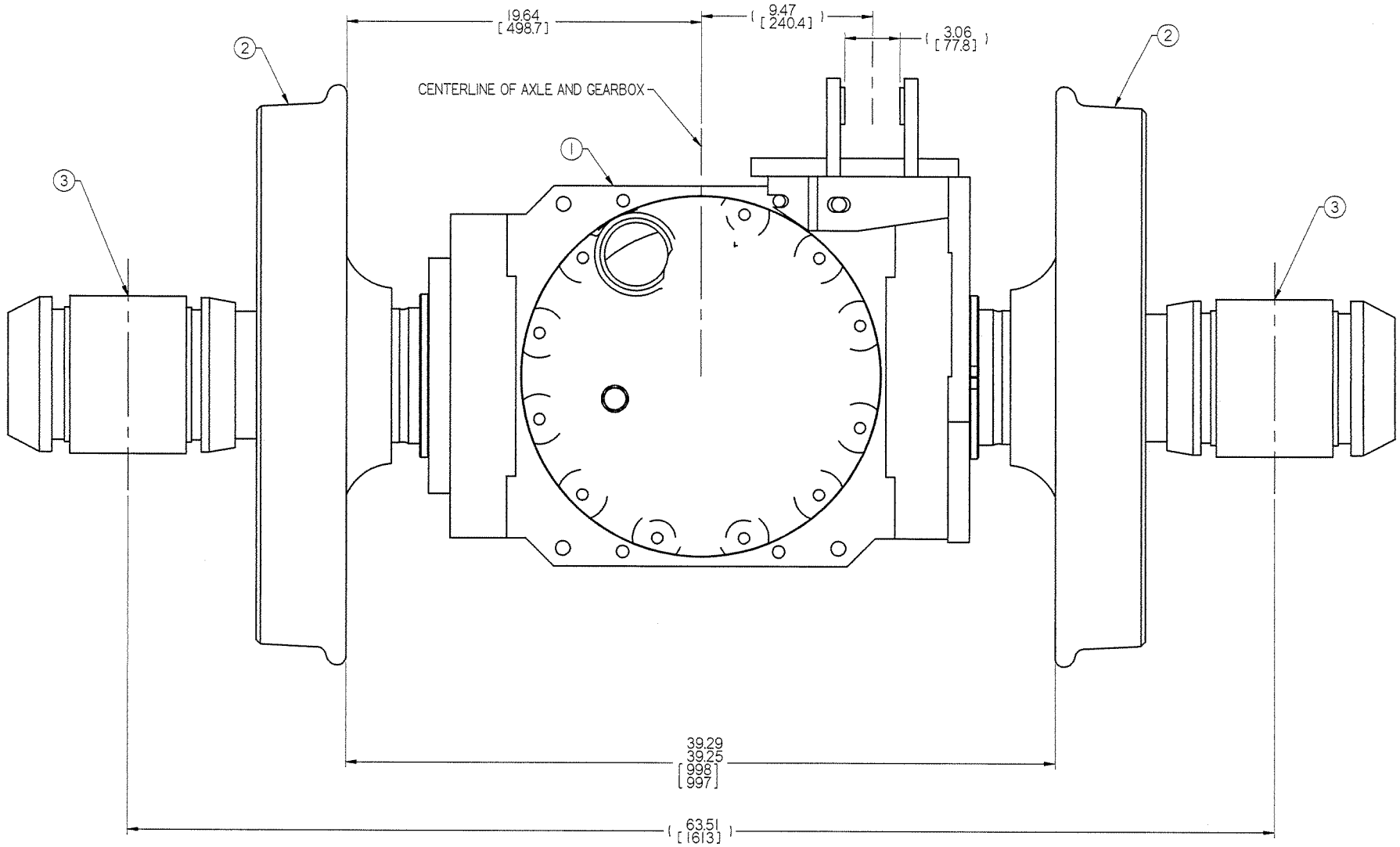

MARK VI
1067 mm GAUGE (42 in)
INSULATED
4.88:1 AXLE RATIO
NEW ZEALAND WHEEL
PROFILE

ITEM	PART NUMBER	DESCRIPTION	QTY
1	4013047	GEARBOX & AXLE ASSY	1
2	4013049	WHEEL, 30 IN NZ PROFILE	2
3	0-3652033-0-03	ROLLER BEARING, AAR CLASS E (6 X 11)	2

SOLID EDGE DRAWING

CONFIDENTIAL
© COPYRIGHT 2001 HARSCO TRACK TECHNOLOGIES. THIS DRAWING OR DOCUMENT IS THE PROPERTY OF HARSCO TRACK TECHNOLOGIES AND EMBODIES CONFIDENTIAL INFORMATION, TRADE SECRET INFORMATION, AND/OR KNOW-HOW THAT IS THE PROPERTY OF HARSCO TRACK TECHNOLOGIES. BY ACCEPTING THIS DRAWING OR DOCUMENT, THE RECIPIENT AGREES (1) NOT TO PROVIDE, OR OTHERWISE MAKE AVAILABLE, THE DRAWING OR DOCUMENT, OR ANY INFORMATION OR KNOW-HOW EMBODIED THEREIN, TO ANY THIRD PARTY AND (2) NOT TO REPRODUCE OR USE THE DRAWING OR DOCUMENT TO MANUFACTURE ANY APPARATUS OR DEVICE, WITHOUT THE PRIOR WRITTEN AUTHORIZATION OF HARSCO TRACK TECHNOLOGIES.

IMPLIED TOLERANCES
ALL DIMENSIONS ARE IN INCHES - TOLERANCE UNLESS OTHERWISE SPECIFIED

NOMINAL SIZE RANGE		INCH PLUS OR MINUS		NOMINAL SIZE RANGE		METRIC PLUS OR MINUS	
OVER	TO	2 PLACE DECIMAL	3 PLACE DECIMAL	OVER	TO	1 PLACE DECIMAL	2 PLACE DECIMAL
0	6	.03	.005	0	150	.8	.127
6	24	.04	.005	150	600	1.0	.203
24	-	.06	.010	-	600	1.5	.254

UNLESS OTHERWISE SPECIFIED ALL MACHINED SURFACES WILL HAVE:
A SURFACE FINISH OF 125 MICROINCHES
ANGULAR TOLERANCE OF ± .50°
CONCENTRICITY WITHIN .010

THIRD ANGLE PROJECTION

UNLESS OTHERWISE SPECIFIED ALL WELDS SHOULD ADHERE TO THE LATEST HTT WELDING SPECIFICATION 101

CHANGE	R/L	REVISION	DATE
100956	A	NEW RELEASE	2/26/07

Description: WHEEL, AXLE & GEARBOX ASSY
Drawing Number: ----------
Machine Type:
Model: 4013046.asm
Drawn: jrowell
Date Drawn: 2/26/07
Weight: 0.0 lbm
Scale:
APVD Desg: JOC
APVD Dir/Eng: JOC
Matl:

HTT
Harsco Track Technologies
Harsco
Columbia, SC

Part Number: 4013046
Size: C
Sheet: 1 of 1

Plotted by jrowell on 6/20/2007 4013046.dft

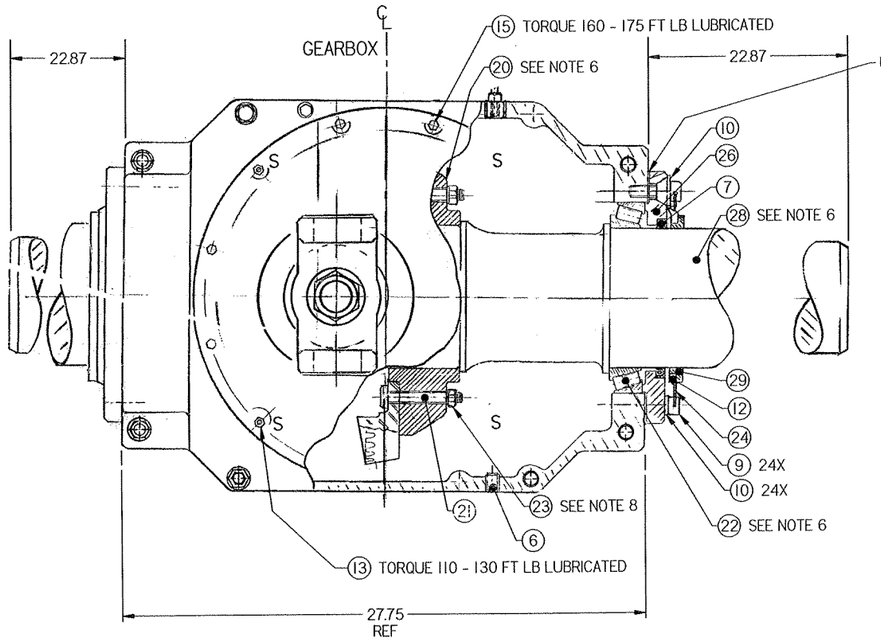

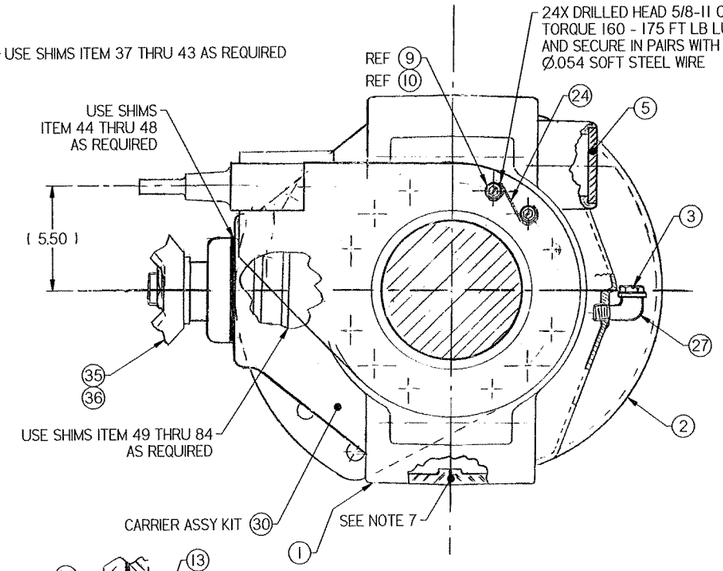

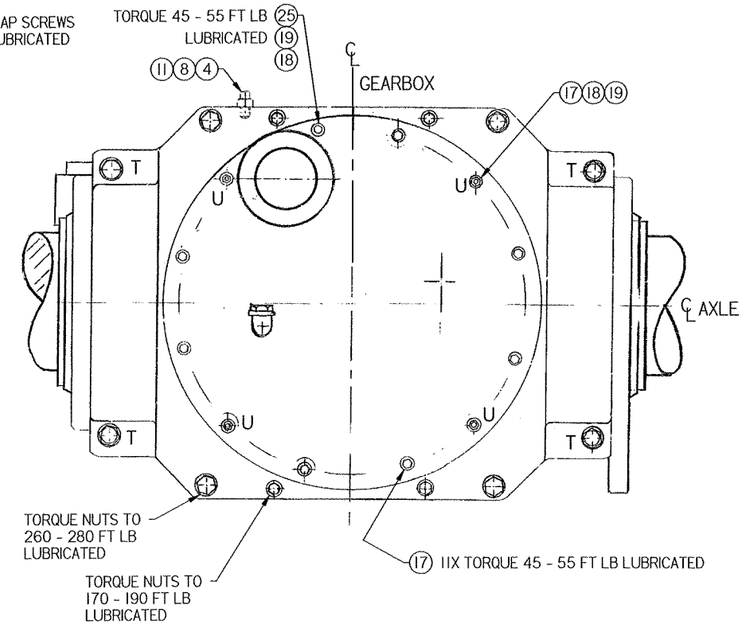

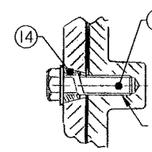

DETAIL A
4X DOWEL
MARKED S

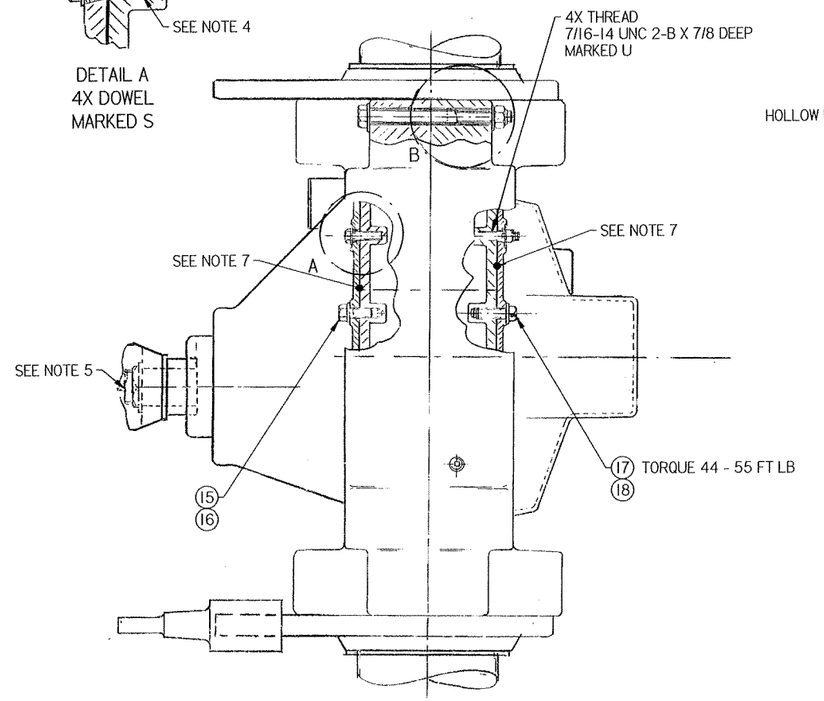

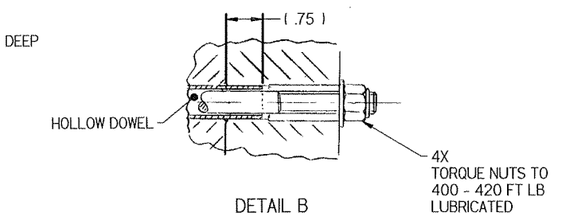

DETAIL B
4X HOUSING DOWEL
MARKED T

NOTES:

1. SEE 0-1100381-0-01 FOR RING GEAR SETUP

2. RING GEAR - PINION TO BE ADJUSTED TO GIVE CORRECT CONTACT PATTERNS PER EATON MANUAL EA 104 PAGE 17

3. NON MACHINED SURFACES INSIDE GEARBOX CASTING TO BE SEALED WITH

4. RECUT TAPER DOWEL SEATS AFTER SETTING PINION. 7/16 DIA. REAMED PILOT HOLES THEN TAPPED 1/2-13 UNC 2-B X 7/8 DEEP AND ITEMS 13 & 14 INSTALLED.

5. PRELOAD PINION BEARINGS BEFORE ASSEMBLY TO GEARBOX PER EATON MANUAL EA 42 PAGE 17. TORQUE PINION NUT AND LOCTITE BEARING MOUNT WITH L422152. TORQUE TO 840 - 1020 FT LB. CHECK PRELOAD WITH SPRING SCALE MUST BE 5 TO 12 INCH POUNDS. CLEAN AND APPLY L425072 TO THE SPLINE BEFORE INSTALLING THE YOKE.

6. SEE AXLE SETUP 0-1100373-0-01

7. USE GASKET LOCTITE, 0-3040000-0-01

8. TORQUE 190 - 200 FT LB LUBRICATED

9. FOR REBUILD ONLY: USE 0-1401718-0-02 FOR ITEM 14

MARK VI
1067mm GAUGE (42in)
INSULATED
4.88:1 AXLE RATIO

SEE 0-2100367-0
FOR OTHER
TABULATIONS

SEE SHEET 2 FOR PARTS LIST

CONFIDENTIAL
© COPYRIGHT 2001 HARSCO TRACK TECHNOLOGIES. THIS DRAWING OR DOCUMENT IS THE PROPERTY OF HARSCO TRACK TECHNOLOGIES AND EMBODIES CONFIDENTIAL INFORMATION, TRADE SECRET INFORMATION, AND/OR KNOW-HOW THAT IS THE PROPERTY OF HARSCO TRACK TECHNOLOGIES. BY ACCEPTING THIS DRAWING OR DOCUMENT, THE RECIPIENT AGREES (1) NOT TO PROVIDE, OR OTHERWISE MAKE AVAILABLE, THE DRAWING OR DOCUMENT, OR ANY INFORMATION OR KNOW-HOW EMBODIED THEREIN, TO ANY THIRD PARTY AND (2) NOT TO REPRODUCE OR USE THE DRAWING OR DOCUMENT TO MANUFACTURE ANY APPARATUS OR DEVICE, WITHOUT THE PRIOR WRITTEN AUTHORIZATION OF HARSCO TRACK TECHNOLOGIES.

SOLID EDGE DRAWING

IMPLIED TOLERANCES
ALL DIMENSIONS ARE IN INCHES - TOLERANCE UNLESS OTHERWISE SPECIFIED

NOMINAL SIZE RANGE		INCH PLUS OR MINUS			NOMINAL SIZE RANGE		METRIC PLUS OR MINUS	
OVER	TO	2 PLACE DECIMAL	3 PLACE DECIMAL		OVER	TO	1 PLACE DECIMAL	2 PLACE DECIMAL
0	6	.03	.005		0	150	.8	.13
6	24	.04	.008		150	600	1.0	.20
24	-	.06	.010		-	600	1.5	.25

UNLESS OTHERWISE SPECIFIED ALL MACHINED SURFACES WILL HAVE:
A SURFACE FINISH OF 125 MICRO-INCHES
ANGULAR TOLERANCE OF ± 30'
CONCENTRICITY WITHIN .010

THIRD ANGLE PROJECTION

UNLESS OTHERWISE SPECIFIED ALL WELDS SHOULD ADHERE TO THE LATEST AWS WELD SPECIFICATIONS 101

CHANGE	R/L	REVISION	DATE
100956	A	NEW RELEASE	2/26/07

Description: GEARBOX & AXLE ASSY
Drawing Number: ----------
Machine Type: MARK IV
Model: NONE
Weight: NOT AVAILABLE
Scale:
Material: SEE DRAWING
Drawn: jrowell 2/26/07
APVD Dwg: JOC
APVD Dtdrg: JOC

HTT
Harsco Track Technologies
Harsco
Columbia, SC

Part Number: 4013047 | Size: D | Sheet: 1 of 2

Plotted by jrowell on 6/20/2007 4013047.dft

ITEM	PART NUMBER	DESCRIPTION	QTY
1	0-2010239-0-01	REAR GEARBOX CASTING SET	1
2	0-3620003-0-01	AXLE HOUSING COVER	1
3	0-3620002-0-02	FILLER PLUG	1
4	L422262	BREATHER	1
5	0-1401719-0-01	BLANK OFF PLATE	1
6	L420507	PLUG -12 NPT INT HEX USE F011972	1
7	0-3656000-0-11	SHAFT SEAL	2
8	L40661	BUSHING HEX.	1
9	0-1405736-0-01	DRILLED HEX HD CAP SCREW	24
10	0-1405718-0-01	BUSHING	24
11	L41070	BUSHING PIPE (VIB)	1
12	0-3656004-0-02	EXCLUDER	2
13	A0038003	1/2-13X1 3/4 HHCSCR GR 8	4
14	0-1401718-0-01	TAPER DOWEL	4
15	A0036176	5/8-11 X 1 1/2 CAPSCREW USE	8
16	A0061016	5/8 MED LOK WSHR USE F001103	12
17	A0036103	7/16-14 X 1 1/2 C SCRW USE	11
18	A0061012	7/16 MED LOK WSHR USE F001291	8
19	A0060014	7/16 SAE WSHR USE F009099	4
20	0-1100487-0-01	RING GEAR CARRIER	1
21	0-3620002-0-10	BOLT	16
22	0-3652007-0-08	BEARING, TAPER ROLLER	2
23	0-3620002-0-11	NUT	16
24	L424026	WIRE SOFT BLACK	1
25	A0036108	7/16-14 X 5 CAPSCREW	1
26	45-292-040-001	END PLATE	1
27	L410474	STREET ELBOW	1
28	4013048	AXLE, INSULATED 1067 MM GAUGE	1
29	B6468XAA	CLAMP ASSY.	2
30	B5470YAC	CARRIER ASSY. KIT	1
31	A0038050	5/8-18X11 HH CPSCR GR8	1
32	A0038051	3/4-16X11 1/2 HHCPSCRGR8	1
33	B9972WAA	TORQUE REMOTE MOUNT	1
34	C1293V01	TORQUE ARM PLATE	1
35	D5168Y01	END YOKE (AXLE)	1
36	D5213Y01	MUD SLINGER	1
37	0-1200605-0-01	SHIM PLATE	0
38	0-1200605-0-02	SHIM PLATE	0
39	0-1200605-0-03	SHIM PLATE	0
40	0-1200605-0-04	SHIM PLATE	0
41	0-1200605-0-05	SHIM PLATE	0
42	0-1200605-0-06	SHIM PLATE	0

ITEM	PART NUMBER	DESCRIPTION	QTY
43	0-1200605-0-07	SHIM PLATE	0
44	0-3523025-0-01	PINION BEARING CAGE SHIN	0
45	0-3523025-0-02	PINION BEARING CAGE SHIM	0
46	0-3523025-0-03	PINION BEARING CAGE SHIN	0
47	0-3523025-0-04	PINION BEARING CAGE SHIM	0
48	0-3523025-0-05	PINION BEARING CAGE SHIM	0
49	0-3630010-0-01	PINION BEARING SPACER	0
50	0-3630010-0-02	PINION BRG SPACER	0
51	0-3630010-0-03	PINION BRG SPACER	0
52	0-3630010-0-04	PINION BRG SPACER	0
53	0-3630010-0-05	PINION BRG SPACER	0
54	0-3630010-0-06	PINION BRG SPACER	0
55	0-3630010-0-07	PINION BRG SPACER	0
56	0-3630010-0-08	PINION BRG SPACER	0
57	0-3630010-0-09	PINION BRG SPACER	0
58	0-3630010-0-10	PINION BEARING SPACER	0
59	0-3630010-0-11	PINION BRG SPACER	0
60	0-3630010-0-12	PINION BRG SPACER	0
61	0-3630010-0-13	PINION BRG SPACER	0
62	0-3630010-0-14	PINION BRG SPACER	0
63	0-3630010-0-15	PINION BRG SPACER	0
64	0-3630010-0-16	PINION BRG SPACER	0
65	0-3630010-0-17	PINION BRG SPACER	0
66	0-3630010-0-18	PINION BRG SPACER	0
67	0-3630010-0-19	PINION BEARING SPACER	0
68	0-3630010-0-20	PINION BRG SPACER	0
69	0-3630010-0-21	PINION BEARING SPACER	0
70	0-3630010-0-22	PINION BRG SPACER	0
71	0-3630010-0-23	SHIMS	0
72	0-3630010-0-24	SHIMS	0
73	0-3630010-0-25	PINION BEARING SPACER, .191	0
74	0-3630010-0-26	PINION BEARING SPACER, .192	0
75	0-3630010-0-27	PINION BEARING SPACER, .193	0
76	0-3630010-0-28	PINION BEARING SPACER, .194	0
77	0-3630010-0-29	PINION BEARING SPACER, .195	0
78	0-3630010-0-30	PINION BRG SPACER	0
79	0-3630010-0-31	PINION BEARING SPACER, .197	0
80	0-3630010-0-32	PINION BRG SPACER	0
81	0-3630010-0-33	PINION BRG SPACER	0
82	0-3630010-0-34	PINION BEARING SPACER, .200	0
83	0-3630010-0-35	PINION BEARING SPACER, .201	0
84	0-3630010-0-36	PINION BEARING SPACER, .202	0

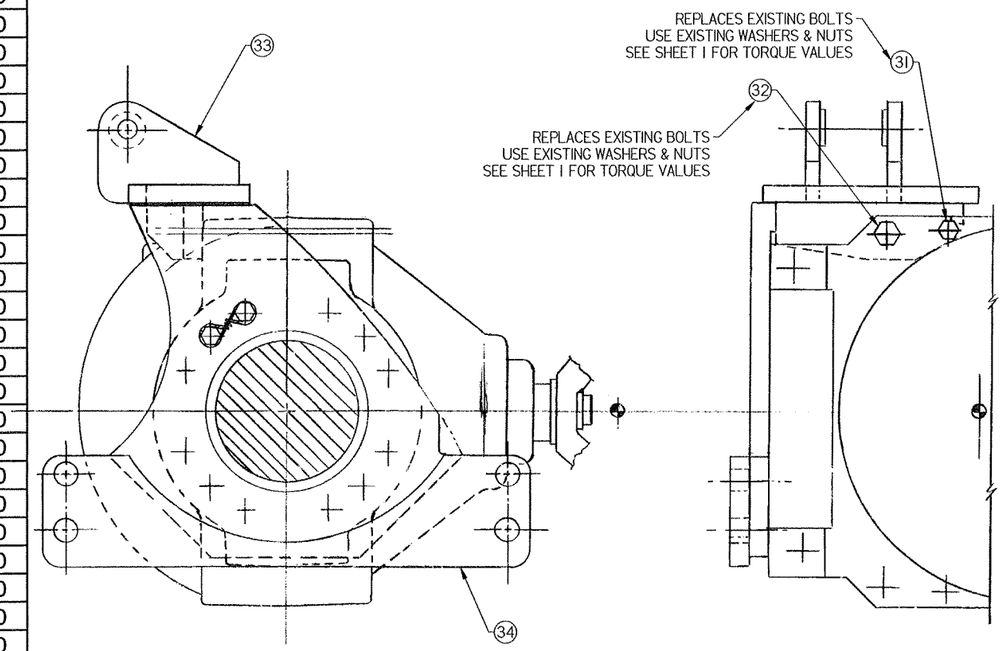

MARK VI
1067mm GAUGE (42in)
INSULATED
4.88:1 AXLE RATIO

SOLID EDGE DRAWING

CONFIDENTIAL
© COPYRIGHT 2001 HARSCO TRACK TECHNOLOGIES. THIS DRAWING OR DOCUMENT IS THE PROPERTY OF HARSCO TRACK TECHNOLOGIES AND EMBODIES CONFIDENTIAL INFORMATION, TRADE SECRET INFORMATION, AND/OR KNOW-HOW THAT IS THE PROPERTY OF HARSCO TRACK TECHNOLOGIES. BY ACCEPTING THIS DRAWING OR DOCUMENT, THE RECIPIENT AGREES (1) NOT TO PROVIDE, OR OTHERWISE MAKE AVAILABLE, THE DRAWING OR DOCUMENT, OR ANY INFORMATION OR KNOW-HOW EMBODIED THEREIN, TO ANY THIRD PARTY AND (2) NOT TO REPRODUCE OR USE THE DRAWING OR DOCUMENT TO MANUFACTURE ANY APPARATUS OR DEVICE, WITHOUT THE PRIOR WRITTEN AUTHORIZATION OF HARSCO TRACK TECHNOLOGIES.

IMPLIED TOLERANCES
ALL DIMENSIONS ARE IN INCHES - TOLERANCE UNLESS OTHERWISE SPECIFIED

INCH NOMINAL SIZE RANGE OVER	TO	INCH PLUS OR MINUS 2 PLACE DECIMAL	INCH PLUS OR MINUS 3 PLACE DECIMAL	METRIC NOMINAL SIZE RANGE OVER	TO	METRIC PLUS OR MINUS 1 PLACE DECIMAL	METRIC PLUS OR MINUS 2 PLACE DECIMAL
0	6	.03	.005	0	150	.8	.13
6	24	.04	.008	150	600	1.0	.20
24	-	.06	.010	-	600	1.5	.25

UNLESS OTHERWISE SPECIFIED ALL MACHINED SURFACES WILL HAVE:
A SURFACE FINISH OF 125 MICROINCHES
ANGULAR TOLERANCE OF ± .50°
CONCENTRICITY WITHIN .010

THIRD ANGLE PROJECTION

UNLESS OTHERWISE SPECIFIED ALL WELDS SHOULD ADHERE TO THE LATEST HTT WELD-ING SPECIFICATION 101

CHANGE	R/L	REVISION	DATE
100956	A	NEW RELEASE	2/26/07

Description: GEARBOX & AXLE ASSY
Drawing Number: ----------
Machine Type: MARK IV
Model: NONE
Weight: NOT AVAILABLE
Scale:
Material: SEE DRAWING
Drawn: jrowell — Date Drawn: 2/26/07
APVD Dwg: JO'C — APVD ChEng: JO'C

HTT
Harsco Track Technologies
Harsco
Columbia, SC

Part Number: 4013047 | Size: D | Sheet: 2 of 2

Plotted by jrowell on 6/20/2007 4013047.dft

PARTS LIST

FIG	ITEM NO	PART NUMBER	DESCRIPTION (29)	AA	AB	AC	AD	AE
				QUANTITY				
	~~1~~	~~0-1100384-0-02~~	~~CARRIER REWORK~~	~~1~~	~~0~~	~~0~~	~~1~~	~~0~~
	2	B5471P02	PINION PILOT BRG.	1	1	1	1	1
	~~3~~	~~P03~~	~~RING GEAR, PINION + NUT~~	~~1~~	~~0~~	~~0~~	~~0~~	—
	4	P04	PINION CONE (INNER)	1	1	1	1	1
	5	P05	PINION CONE (OUTER)	1	1	1	1	1
	6	P06	PINION BRG. WASHER	1	1	1	1	1
	~~7~~	~~P07~~	~~PINION CAGE ASS'Y.~~	~~1~~	~~0~~	~~0~~	~~1~~	~~0~~
			(INCLUDES CAGE & BRG. CUPS)					
	8	A0036177	CAGE CAP SCREW	6	6	6	6	6
	9	A0061017	CAGE LOCK WASHER	6	0	0	6	0
	10	B5471P10	PINION NUT	0	0	0	0	0
	~~11~~	~~P11~~	~~OIL SEAL~~	~~1~~	~~0~~	~~0~~	~~1~~	~~0~~
	12	P12	WASHER	0	1	1	0	1
	13	0-1100384-0-03	CARRIER REWORK	1	1	1	1	1
	14	B5471P14	RING GEAR, PINION & NUT	0	0	1	0	0
	15	P15	PINION CAGE ASSY.	1	1	1	1	1
	16	P16	PINION NUT	0	0	0	0	0
	17	P17	OIL SEAL	1	1	1	1	1
	18	P18	RING GEAR, PINION & NUT	0	1	0	0	0
	19	P19	THRUST SCREW	0	0	0	0	0
	20	P20	NUT	0	0	0	0	0
	21	B5471P21	RING GEAR, PINION + NUT	1	0	0	1	0
	22	0-3627008-0-08	YOKE	0	0	0	1	0
	23	0-3023000-0-31	M12-1.75 X 70 SHCS (12.9)	0	0	0	4	0
	24	A0069043	M12-1.75 LOCKNUT	0	0	0	4	0
	25	B5471P24	RING GEAR, PINION & NUT	0	0	0	0	1

ASSEMBLY IDENTIFIER: AA | AB | AC | AD | AE

	AA	AB	AC	AD	AE
EATON R5461 R=6.5031 SPEC. No. 214698					
FIELD KIT FOR ONLY 4 IT SPARE SALES EATON R5481 R=4.86:1 SPEC No. 122031					
EATON R5481 R=5.43:1 SPEC. No. 122032					
EATON R5480 R=5.43:1 SPEC. NO. 98546					

REVISIONS

NO	ER	DESCRIPTION	DR	CK	APP	MF
1	ECN 9345	RELEASE				MF
2	ECN 9345-1	ADDED ITEM 11	CAS		WAC	MF
3	ECN 9345-2	QTY. OF ITEM #10 WAS 1. — DESCR. OF IT# 3 WAS "RING GEAR & PINION"				MF
5	ECN 9847.13	ADDED ITS. 19 & 20 TO AB & AC.				
6	11657	DEL IT. 3 + REPLACED WITH IT. 21	DJ		WAC	
7	11391.1	DELETED ITEMS 1, 7, & 11. IT. 8 PT. No. WAS B5471 P08, IT. 9 PT. No. WAS B5471 P09. ON TABS AA & AD, QTY. FOR IT. 13, 15, & 17 WAS Ø. ON IT. 19 & 20, QTY. FOR TABS AB, AC, & AE WAS 1.	WAC		WAC	

ASSEMBLY DESCRIPTION

ER		11947.0		11391.1	
DR		DV		WAC	
CK					
APP					
MF					

Tamper

TAMPER CORP.
2401 Edmund Road-Box 20
Cayce-West Columbia
South Carolina 29171-0020
Tel. (803) 794 9160

ENG DWG NO: B5470Y
SHEET: 1
CONT ON: ~
DESCRIPTION (30): CARRIER ASS'Y. KIT
DRAWN: CAS
DATE: 8-30-88
CHECKED:
DATE: 8-31-88
APP: WAC
DATE: 8-31-88
APP:
DATE:

SHEET 1 CONT ON ~ ENG DWG NO B5470Y

American Society of Calendar 306375

ENG DWG NO	DESCRIPTION (30)	DRAWN	DATE	CHECKED	DATE	APP	DATE	APP	DATE
B5470Y	CARRIER ASS'Y. KIT	CAS	8-30-88		8-31-88		8-31-88		

ITEM NO	PART NO	SPECIFICATIONS	APP VENDOR(S)	DER	DR	APP	CK	MF
		EATON SPEC. NO. (SEE PARTS LIST)						
		SEE SEPARATE P/L	EATON CORP.					

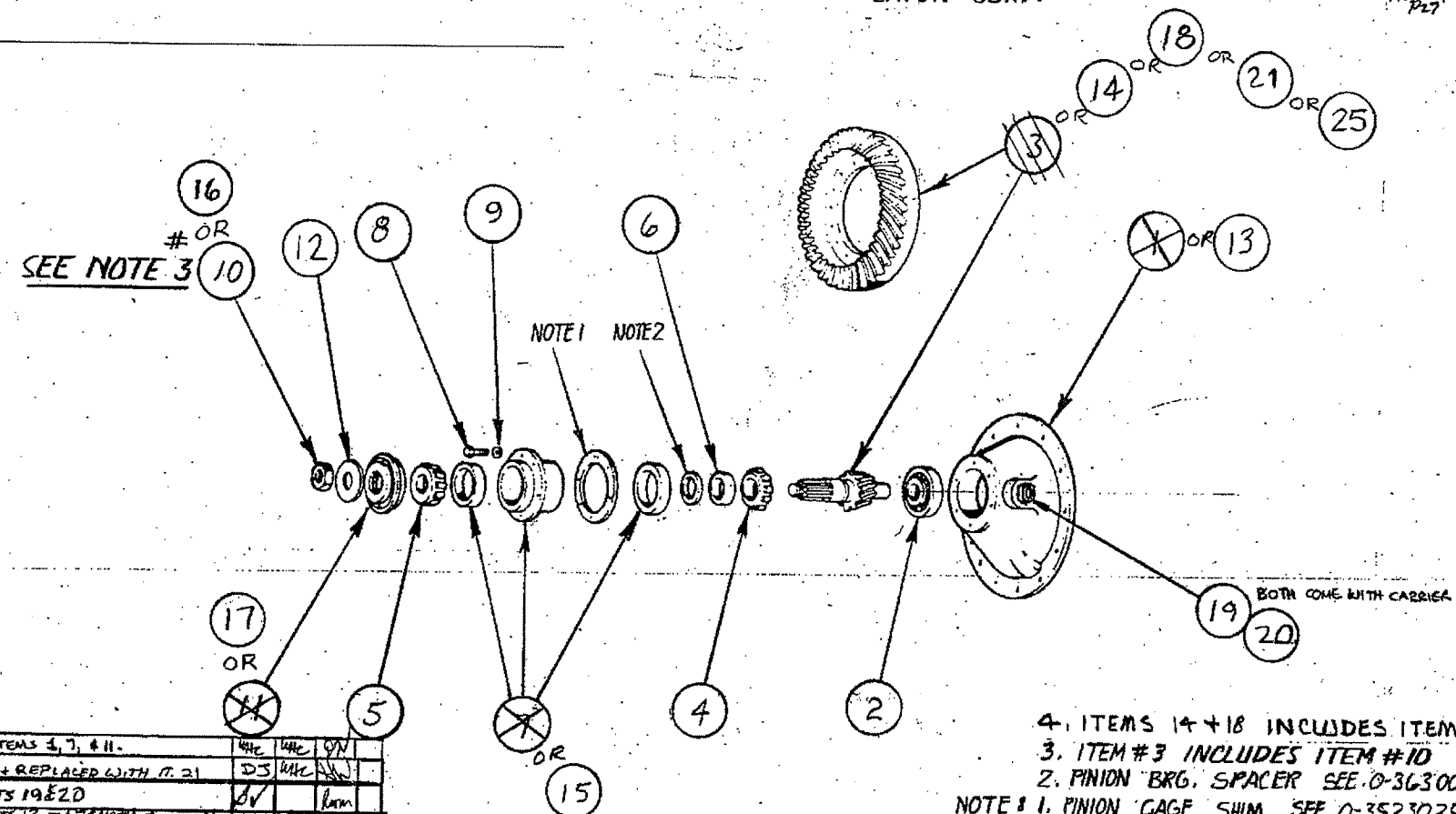

4. ITEMS 14 + 18 INCLUDES ITEM # 16.
3. ITEM # 3 INCLUDES ITEM # 10
2. PINION BRG. SPACER SEE 0-3630010-0 (REF.)
NOTE: 1. PINION CAGE SHIM SEE 0-3523025-0 (REF.)

NO	DER	DESCRIPTION	DR	APP	CK	MF
7	11359.1	DELETED ITEMS 1, 7, & 11.	WAC	WAC	ON	
6	11057.2	DEL. IT 3 + REPLACED WITH IT. 21	DJS	WAC		
5	SCR 9847.33	ADDED ITS 19 & 20	DV		bm	
4		ADDED ITS 12 – 17 & NOTE 4 SPEC. No. MOVED TO PARTS LIST.	BV			
3	ECN 4345	ADDED NOTE #3	MP			MF
2	ECN 4345	ADDED ITEM 11	CAS	WAC		
1		RELEASE				MF

REVISIONS

THIS DOCUMENT CONTAINS PROPRIETARY INFORMATION AND SUCH INFORMATION MAY NOT BE DISCLOSED TO OTHERS FOR ANY PURPOSE OR USED FOR MANUFACTURING PURPOSES WITHOUT THE WRITTEN PERMISSION OF TAMPER

IMPLIED TOLERANCES
ALL DIMENSIONS ARE IN INCHES – TOLERANCE UNLESS OTHERWISE SPECIFIED

NOMINAL SIZE RANGE OVER	TO	PLUS OR MINUS FRACTION	2 PLACE DECIMAL	3 PLACE DECIMAL	NOMINAL SIZE RANGE OVER	TO	PLUS OR MINUS FRACTION	2 PLACE DECIMAL	3 PLACE DECIMAL
–	1	1/64	.01	.005	6	24	3/64	.03	.008
1	6	1/32	.02	.005	24	–	1/16	.05	.010

ANGULAR DIMENSIONS PLUS OR MINUS 1 DEGREE
ALL MACHINED SURFACES TO HAVE A SURFACE FINISH OF 125 MICROINCHES UNLESS OTHERWISE SPECIFIED

3rd ANGLE PROJECTION
DO NOT SCALE

SHEET 1 | CONT ON ~ | ENG DWG NO. B5470Y

Tamper TAMPER CORP.
2401 Edmund Road-Box 20
Cayce-West Columbia
South Carolina 29171-0010
Tel (803) 794-9180

American blueprint of columbia 305379

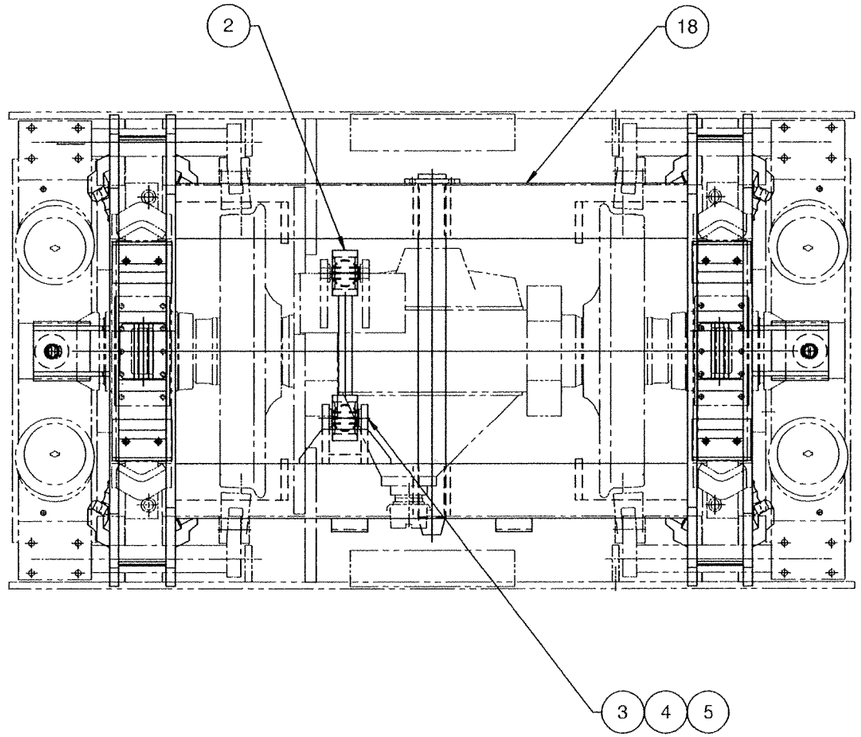

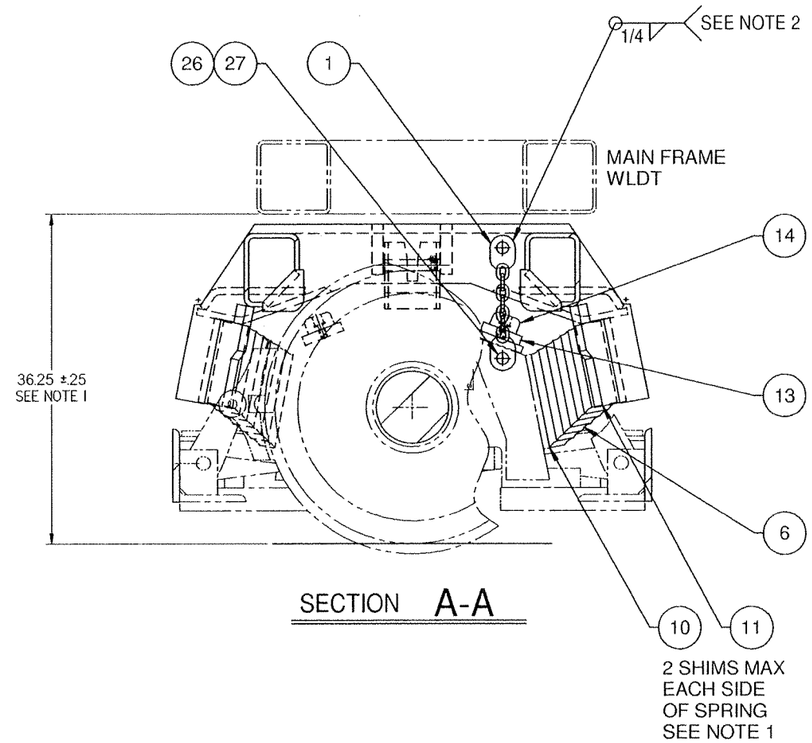

SECTION A-A

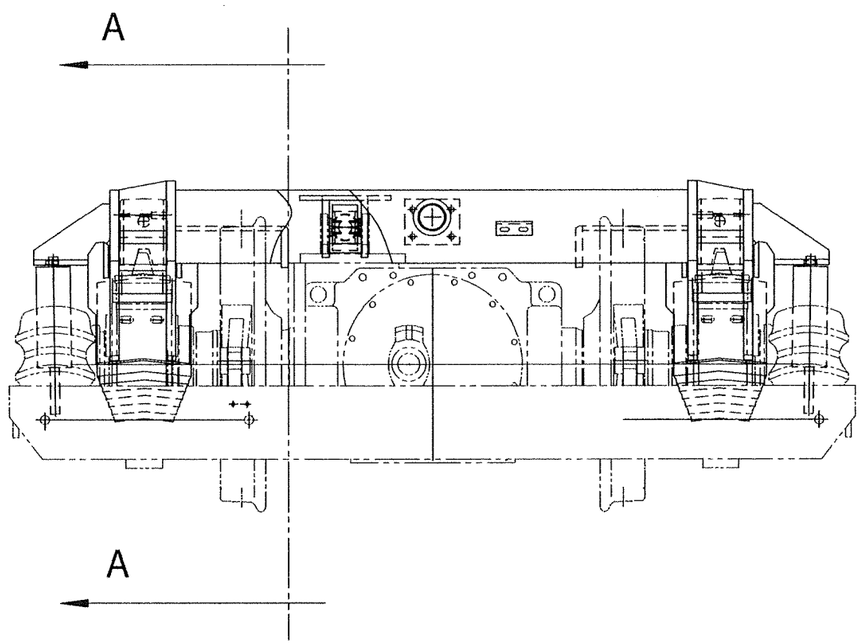

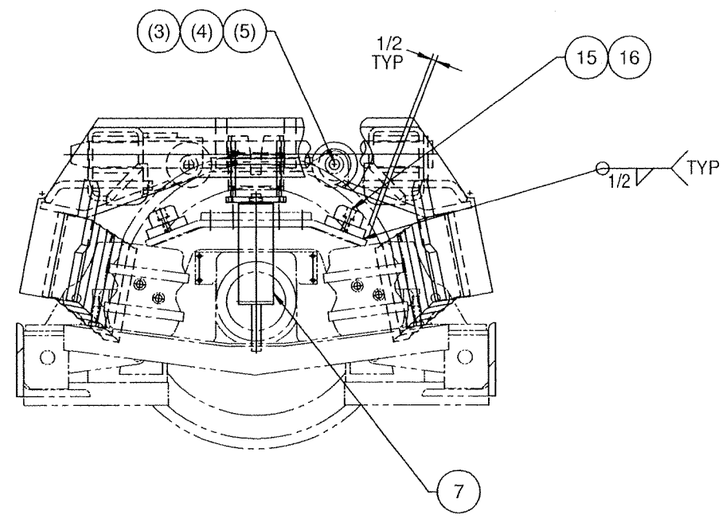

SEE SHEET 2 FOR PARTS LIST

NOTES:

1. SHIM SPRINGS TO ACHIEVE A FRAME HEIGHT OF 36 1/4 AT REST AS INDICATED
2. LOCATE ITEM 1 WITH SPRINGS FULLY EXTENDED (TYP)

SOLID EDGE DRAWING

CONFIDENTIAL
© COPYRIGHT 2001 HARSCO TRACK TECHNOLOGIES. THIS DRAWING OR DOCUMENT IS THE PROPERTY OF HARSCO TRACK TECHNOLOGIES AND EMBODIES CONFIDENTIAL INFORMATION, TRADE SECRET INFORMATION, AND/OR KNOW-HOW THAT IS THE PROPERTY OF HARSCO TRACK TECHNOLOGIES. BY ACCEPTING THIS DRAWING OR DOCUMENT, THE RECIPIENT AGREES (1) NOT TO PROVIDE, OR OTHERWISE MAKE AVAILABLE, THE DRAWING OR DOCUMENT, OR ANY INFORMATION OR KNOW-HOW EMBODIED THEREIN, TO ANY THIRD PARTY AND (2) NOT TO REPRODUCE OR USE THE DRAWING OR DOCUMENT TO MANUFACTURE ANY APPARATUS OR DEVICE WITHOUT THE PRIOR WRITTEN AUTHORIZATION OF HARSCO TRACK TECHNOLOGIES.

IMPLIED TOLERANCES
ALL DIMENSIONS ARE IN INCHES — DO NOT RANGE UNLESS SPECIFIED OTHERWISE

INCH				METRIC			
NOMINAL DIMENSION	±	ANGULAR DIMENSION	ANGULAR DIMENSION	NOMINAL DIMENSION	±	ANGULAR DIMENSION	ANGULAR DIMENSION
0/0.5	.005	0.5/1	1/2/4	0/4	.10	0/12.5	0/12.5
0.5	.01	1/3	2/6	4/25	.25	0/5	0/5
3/6	.02	3/10	5/20	25/100	.50	0/2	0/2
6/12	.05	10/30	20/60	100/400	1.0	0/1	0/1

UNLESS OTHERWISE SPECIFIED ALL MACHINED SURFACES WILL HAVE:
AN ALLOWANCE FOR FINISH OF 1/16 (1.6) ON ALL SURFACES WITHIN 1 FOOT (305) AND 1/8 (3.2) ON ALL OTHER SURFACES

CHANGE	R/L	REVISION			DATE
100995	A	NEW RELEASE			12-06-06
ECN 101251	B	IT 2 WAS 4013323	AO	JBR	16 AUG 07

Description: SUSPENSION INSTL, FRONT
Drawing Number: ----------
Machine Type: MARK IV
Model: NONE
Drawn: jrowell 3/8/07
Weight: N/A
Scale: 1:4
Engr. Appr.: JOC
Mfg. Appr.: JOC
Draft:

HTT
Harsco Track Technologies
Harsco
Columbia, SC

Part Number: 4013282
Size: D
Sheet: 1 of 2

Plotted by acuzts on 8/16/2007 4013282.dft

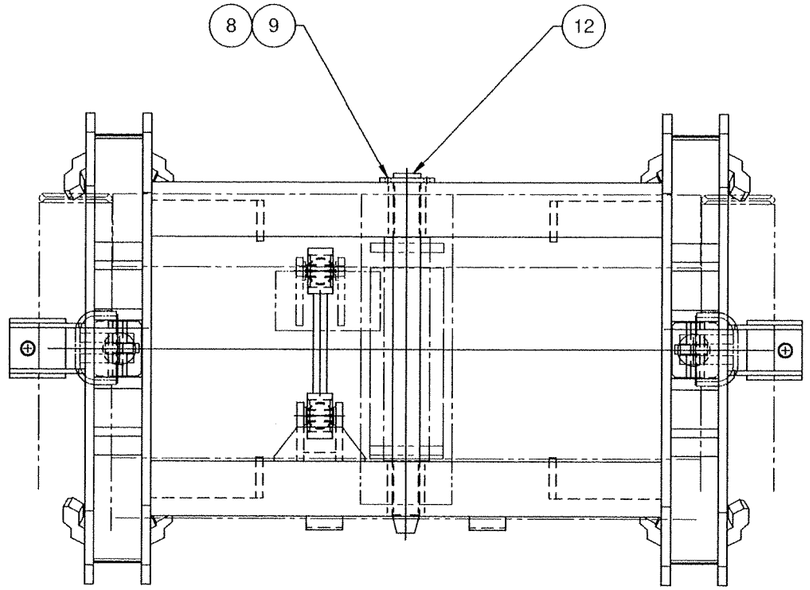

DETAIL A

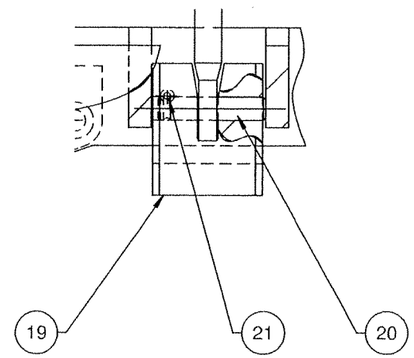

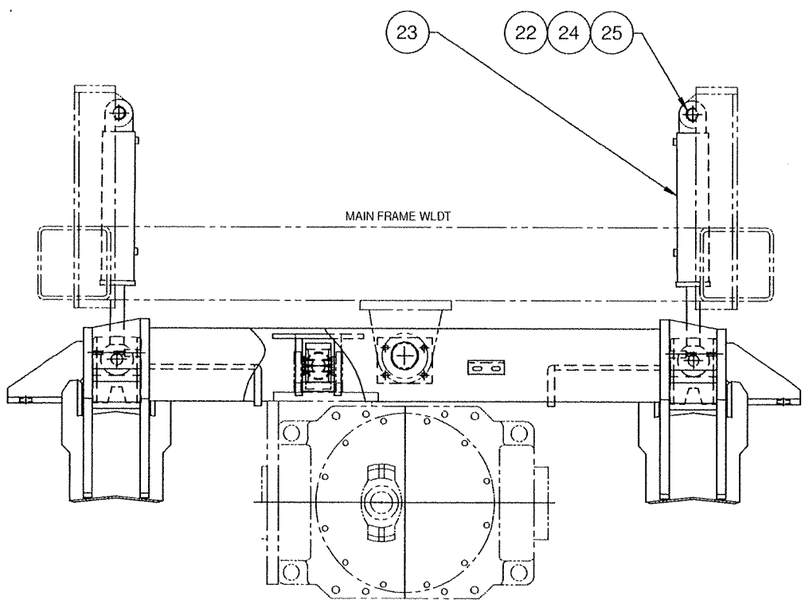

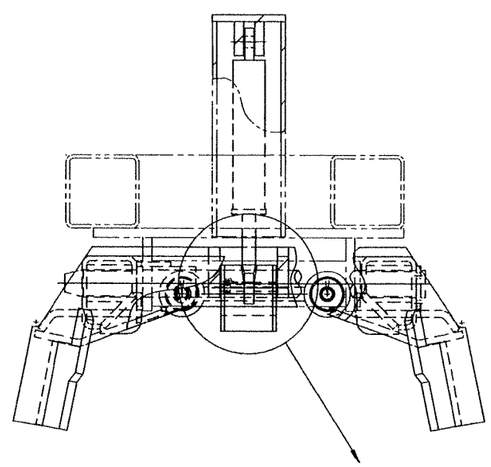

ITEM	PART NUMBER	DESCRIPTION	QTY
1	B8616YAA	AXLE SUPPORT CHAIN	2
2	A3455YAC	LINK ASSY	1
3	A0068029	1/4 X 1 1/2 C PIN USE F002733	4
4	A0059023	1 1/8 MED PLAIN WASHER	4
5	B5391T31	PIN	2
6	B0084W13	SPRING SUSPENSION SET	1
7	A3431Y03	FRICTION SNUBBER	2
8	A0036122	1/2-13 X 1 1/4 CAPSCREW USE	4
9	A0061023	1/2 HEAVY LOCK WASHER	4
10	C0374X01	SHIM, INSIDE	8
11	C0375X01	SHIM, OUTSIDE	8
12	A0418YAD	WELDMENT, PIVOT PIN	1
13	B9984Y02	MOUNT BLOCK	4
14	G6321Y01	BUMPER	4
15	A0061028	1/2 HI COLLAR LOK WSHR	8
16	A0043087	1/2-13 X 1 1/4 SCHDSCRNLOK	8
17	BLANK		
18	C1249VAA	FRAME, PIVOTING AXLE	1
19	C1277X01	LOCKOUT BLOCK	2
20	C1282Y01	GROOVED PIN	2
21	L40600	PIN ROLL	2
22	B5391T22	PIN	2
23	B5704XAB	HYCL 3" BORE, 1.5 ROD CYL ASS	2
24	A0068030	1/4 X 2 COTTER PIN USE F001547	4
25	A0060022	1 1/4 SAE WSHR	4
26	A0036350	1 1/4-7 X 3 HEX HD C SCR	2
27	A0061020	1 1/4 MED LOK WSHR USE F009694	2
28			
29			
30			
31			
32			
33			

CONFIDENTIAL
© COPYRIGHT 2001 HARSCO TRACK TECHNOLOGIES. THIS DRAWING OR DOCUMENT IS THE PROPERTY OF HARSCO TRACK TECHNOLOGIES AND EMBODIES CONFIDENTIAL INFORMATION, TRADE SECRET INFORMATION, AND/OR KNOW-HOW THAT IS THE PROPERTY OF HARSCO TRACK TECHNOLOGIES. BY ACCEPTING THIS DRAWING OR DOCUMENT, THE RECIPIENT AGREES (1) NOT TO PROVIDE, OR OTHERWISE MAKE AVAILABLE, THE DRAWING OR DOCUMENT, OR ANY INFORMATION OR KNOW-HOW EMBODIED THEREIN, TO ANY THIRD PARTY AND (2) NOT TO REPRODUCE OR USE THIS DRAWING OR DOCUMENT TO MANUFACTURE ANY APPARATUS OR DEVICE, WITHOUT THE PRIOR WRITTEN AUTHORIZATION OF HARSCO TRACK TECHNOLOGIES.

SOLID EDGE DRAWING

IMPLIED TOLERANCES
ALL DIMENSIONS ARE IN INCHES — TOLERANCE ON FRACTIONAL DIMENSIONS ±1/32
INCH: DECIMAL ±0.010, ANGULAR ±0.5°; METRIC: DECIMAL ±0.25, ANGULAR ±0.5°
UNLESS OTHERWISE SPECIFIED ALL MACHINED SURFACES WILL HAVE A MINIMUM 125 MICRO INCH ARITHMETIC AVERAGE FINISH

CHANGE	F/L	REVISION		DATE
I00995	A	NEW RELEASE		12-06-06
ECN 101251	B	IT 2 WAS 4013323	AO JBR	16 AUG 07

Description: SUSPENSION INSTL, FRONT
Drawing Number: ----------
Machine Type: MARK IV
Model: NONE
Drawn: jrowell 3/8/07
Weight: N/A
Scale: 1:6
A.C. Mgr: JO'C
A.C. Eng: JO'C
Draft:

HTT
Harsco Track Technologies
Harsco
Columbia, SC

Part Number: 4013282 | Size: D | Sheet: 2 of 2

Plotted by acuzts on 8/16/2007 4013282.dft

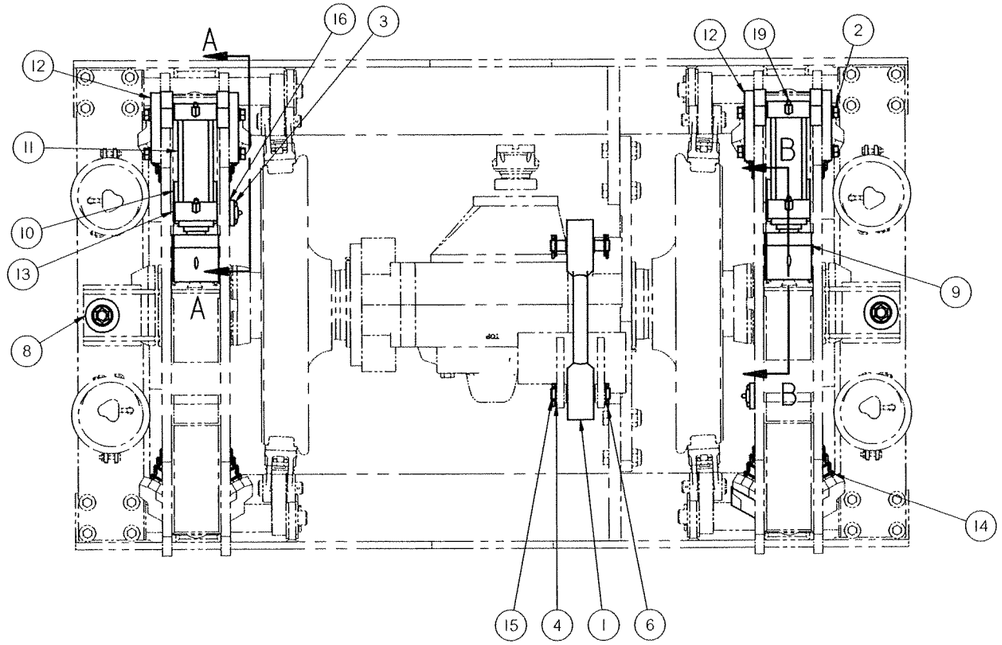

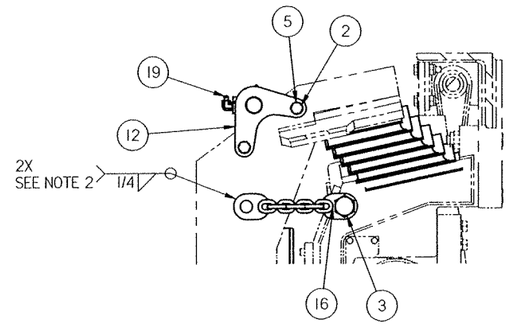

SECTION A-A

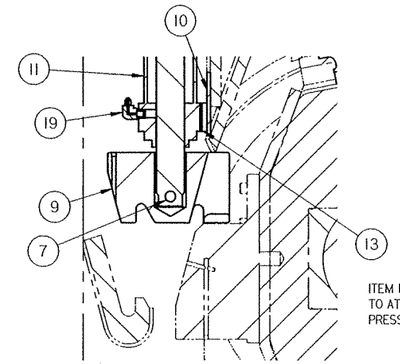

ITEM 13 IS TO BE USED AS AN ELASTOMER SPRING.
TO ATTACH TO ITEM 10, REMOVE PAPER AND
PRESS TO CLEANED SURFACES ON ITEMS 10 & 11.

SECTION B-B

(ENLARGED)
TYP BOTH SIDES

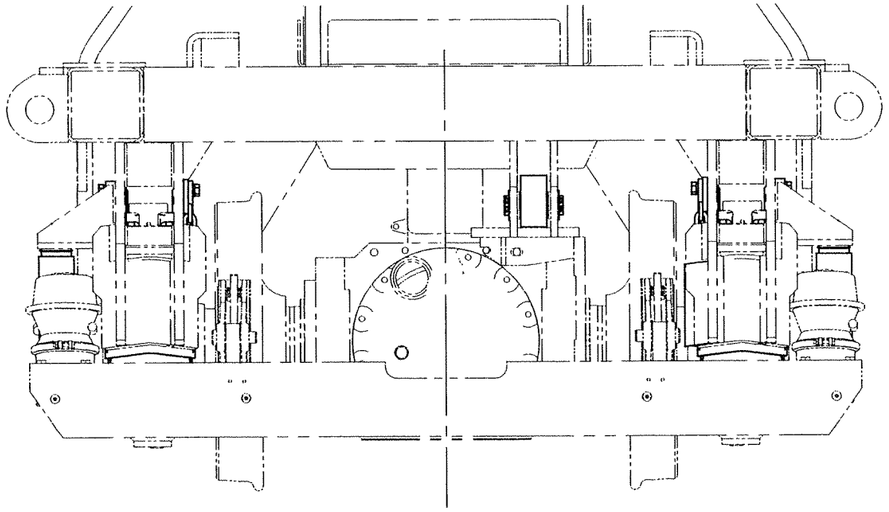

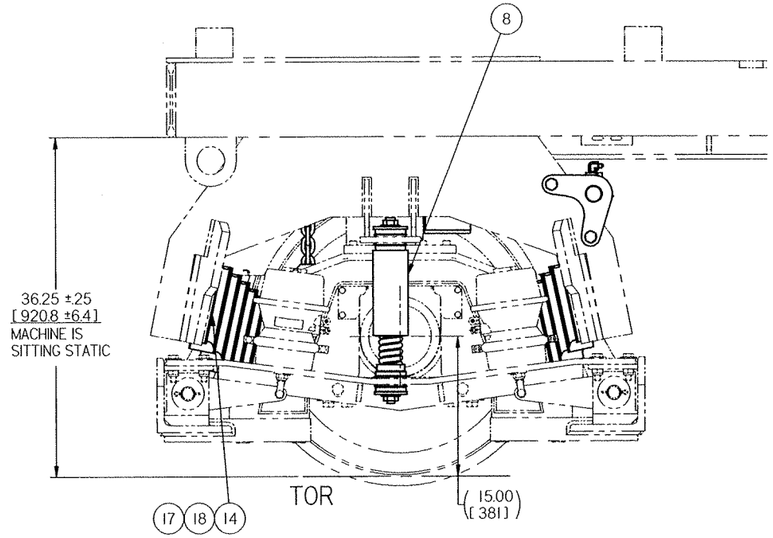

USE SHIMS ITEM 17 & 18 AS REQUIRED -
MAX OF 2 SHIMS EACH SIDE OF SPRING
SEE NOTE 1

NOTES:
1. SHIM SPRINGS TO ACHIEVE FRAME HEIGHT
WITH SUSPENSION UNLOCKED.
2. LOCATE WITH SPRINGS FULLY EXTENDED.

It No	Part Number	Description	Qty
19	L423097	ADAPTER, 3/8 MP - 1/4 JIC 90 DEG	4
18	C0375X01	SHIM OUTSIDE	4
17	C0374X01	SHIM INSIDE	4
16	B8616YAA	AXLE SUPPORT CHAIN	2
15	B5391T31	PIN W/ HOLES (1 1/8 DIA)	2
14	B0084W13	SPRING SUSPENSION SET	1
13	A7852Y01	ELASTOMER FOAM (1/2 X 2 X 4 1/2)	2
12	A7850XAA	MOUNT TRUNION	4
11	A7808Y01	HYD CYL 3 1/4 X 2 X 7	2
10	A7305T11	FLAT BAR	2
9	A6653W01	BLOCK LOCKOUT	2
8	A3431Y03	FRICTION SNUBBER	2
7	A0957T13	ROUND BAR (3/4 DIA X 5 1/8)	2
6	A0068029	1/4 X 1 1/2 COTTER PIN	4
5	A0061022	3/4 MEDIUM LOCKWASHER	8
4	A0059023	WASHER FLAT 1 1/8	4
3	A0036281	1 1/4-7 X 2 1/2 HEX HD CAPSCR	2
2	A0036219	3/4-10 X 2 1/4 HHCS GR. 5	8
1	A3455YAC	LINK ASSY	1

SUSPENSION SPRING SET - 4650 LBS / INCH

CONFIDENTIAL
© COPYRIGHT 2001 HARSCO TRACK TECHNOLOGIES. THIS DRAWING OR DOCUMENT IS THE PROPERTY OF HARSCO TRACK TECHNOLOGIES AND EMBODIES CONFIDENTIAL INFORMATION, TRADE SECRET INFORMATION, AND/OR KNOW-HOW THAT IS THE PROPERTY OF HARSCO TRACK TECHNOLOGIES. BY ACCEPTING THIS DRAWING OR DOCUMENT, THE RECIPIENT AGREES (1) NOT TO PROVIDE, OR OTHERWISE MAKE AVAILABLE, THE DRAWING OR DOCUMENT, OR ANY INFORMATION OR KNOW-HOW EMBODIED THEREIN, TO ANY THIRD PARTY AND (2) NOT TO REPRODUCE OR USE THE DRAWING OR DOCUMENT TO MANUFACTURE ANY APPARATUS OR DEVICE, WITHOUT THE PRIOR WRITTEN AUTHORIZATION OF HARSCO TRACK TECHNOLOGIES.

SOLID EDGE DRAWING

IMPLIED TOLERANCES
ALL DIMENSIONS ARE IN INCHES - TOLERANCE UNLESS OTHERWISE SPECIFIED

NOMINAL SIZE RANGE		RGS PLUS OR MINUS		NOMINAL SIZE RANGE		METRIC PLUS OR MINUS	
OVER	TO	2 PLACE DECIMAL	3 PLACE DECIMAL	OVER	TO	1 PLACE DECIMAL	2 PLACE DECIMAL
0	6	.03	.005	0	150	.8	.13
6	24	.04	.008	150	600	1.0	.20
24	-	.06	.010	-	600	1.5	.25

UNLESS OTHERWISE SPECIFIED ALL MACHINED SURFACES WILL HAVE;
A SURFACE FINISH OF 125 MICROINCHES
ANGULAR TOLERANCE OF ± .30°
CONCENTRICITY WITHIN .010

THIRD ANGLE PROJECTION

UNLESS OTHERWISE SPECIFIED ALL WELDS SHOULD ADHERE TO THE LATEST HTT WELD INQ SPECIFICATION 101

CHANGE	R/L	REVISION	DATE
ECN-101003	A	RELEASE	19 Mar 07
ECN-101251	B	IT I WAS 4013323 AO JBR	16 AUG 07

Description: SUSPENSION INSTL REAR
Drawing Number: ----------
Machine Type: MARK VI
Model: 4013363.asm
Drawn: MJT
Date Drawn: 19 Mar 07
Weight: 938.9 lbm
Scale: -----
APVD Dwg: JBR
APVD ChEng: AO
Mat'l

HTT
Harsco Track Technologies
Harsco
Columbia, SC

Part Number: 4013363
Size: D
Sheet: 1 of 1

Plotted by gouzts on 8/21/2007 4013363.dft

PARTS LIST

ITEM NO	PART NUMBER	DESCRIPTION	ASSEMBLY IDENTIFIER AA QUANTITY
1	0-3521003-0-42	85WB DRIVESHAFT ASSY	1
2	L425527	1/2-20 X 1 1/2 HHCS GR8	16
3	A0061013	1/2 MEDIUM LOCK WASHER	16
4	G1655YAA	FRONT WLDT	1
5	G1610XAA	MOUNT WLDT	1
6	G1606Y01	HOOP	2
7	G1613Y01	CAP PLATE	2
8	A0036124	1/2-13 X 1 3/4 HHCS	10
9	L40767	1/2-13 ESNA NUT	12
10	A0036126	1/2-13 X 2 1/4 HHCS	2

DWG NO B6692XAD
SHEET 1
CONT ON –
DESCRIPTION (24) DRIVESHAFT INSTL
DRAWN PJG
DATE 12-2-96
CHECKED
DATE
APP

REVISIONS

NO	ER	DESCRIPTION	DR	CK	APP	MF
2	8095	SEPARATED P/L FROM DWG. ADDED ITEMS 4-10.	PJG			

ASSEMBLY DESCRIPTION

ER	
DR	
CK	
APP	
MF	

DATE
APP
DATE

SHEET 1
CONT ON –
LAST ECR 8095.
CHECKED JDO
DATE 12-Feb-97
DWG NO B6692XAD

Fairmont Tamper™
2401 Edmund Road-Box 20
Cayce-West Columbia,
South Carolina 29171-0020
(803) 822-9160

DATE

ENG.DWG.NO.
B6692XAD

REVISIONS							
NO	ER	DESCRIPTION	ZONE	DR	CK	APP	MF
1	8095 .26	NEW RELEASE		HAP			
2	8095	SEPARATED P/L FROM DWG.		PJG			

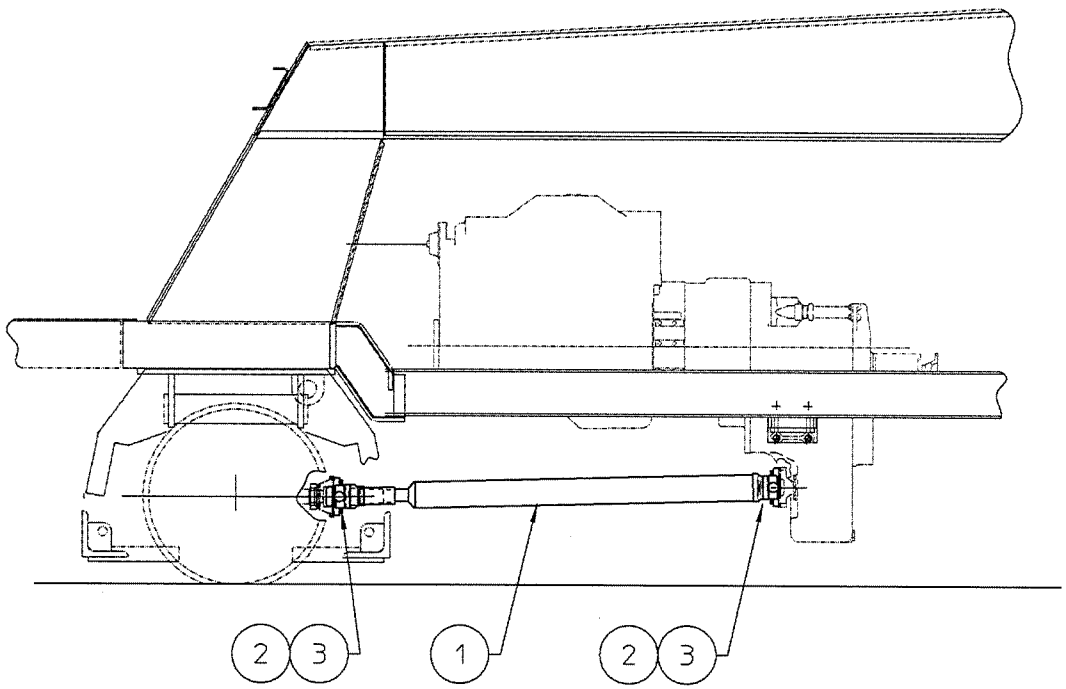

NOTES:
1) INSTALL DRIVE SHAFT (ITEM 1) WITH ENDS AS SHOWN TO ENSURE ADEQUATE CLEARANCE. ALL GREASE FITTINGS ARE TO BE POSITIONED SO THEY ARE EASILY ACCESSIBLE.
2) APPLY LOCTITE 242 TO BOLTS (ITEM 2) AND TIGHTEN TO 120 FT-LBS OF TORQUE.
3) GREASE ALL FITTINGS ONCE COMPLETED.

SEE SEPARATE PARTS LIST

FIG NO.	ITEM NO.	PART NUMBER	DESCRIPTION AND MATERIAL SIZE (REF.ONLY)	QTY

PLOT SCALE = 1/16

IMPLIED TOLERANCES
ALL DIMENSIONS ARE IN INCHES-TOLERANCE UNLESS OTHERWISE SPECIFIED

NOMINAL SIZE RANGE		PLUS OR MINUS			NOMINAL SIZE RANGE		PLUS OR MINUS		
OVER	TO	FRACTION	2 PLACE DECIMAL	3 PLACE DECIMAL	OVER	TO	FRACTION	2 PLACE DECIMAL	3 PLACE DECIMAL
-	1	1/64	.01	.003	6	24	3/64	.03	.008
1	6	1/32	.02	.005	24	-	1/16	.05	.010

ANGULAR DIMENSIONS PLUS OR MINUS 1 DEGREE
√ ALL MACHINED SURFACES TO HAVE A SURFACE FINISH OF 125 MICROINCHES UNLESS OTHERWISE SPECIFIED.

WELDING SPECIFICATION

UNLESS OTHERWISE SPECIFIED ALL WELDS SHOULD ADHERE TO FAIRMONT TAMPER WELDING SPECIFICATION NO. 101

WEIGHT lbs.

3rd ANGLE PROJECTION

DO NOT SCALE

SHEET 1 CONT. ON 2

DESCRIPTION (24) DRIVESHAFT INSTL

DRAWN HAP	DATE 5-29-96	MACHINE TYPE MARK VI
CHECKED JA	DATE 7-2-96	
APP-ENG A.LINDSEY	DATE 7-2-96	
APP-MFG	DATE	
LAST ECR. 8095. 153	CHECKED jgg DATE 12-Feb-97	ENG.DWG.NO. B6692XAD

Fairmont Tamper™ 2401 Edmund Road-Box 20 Cayce-West Columbia, South Carolina 29171-0020 (803) 822-9160

THIS DOCUMENT CONTAINS PROPRIETARY INFORMATION AND SUCH INFORMATION MAY NOT BE DISCLOSED TO OTHERS FOR ANY PURPOSE OR USED FOR MANUFACTURING PURPOSES WITHOUT THE WRITTEN PERMISSION OF FAIRMONT TAMPER.

ENG.DWG.NO.
B6692XAD

REVISIONS							
NO	ER	DESCRIPTION	ZONE	DR	CK	APP	MF
2	8095	ADDED SHEET 2		PJG			

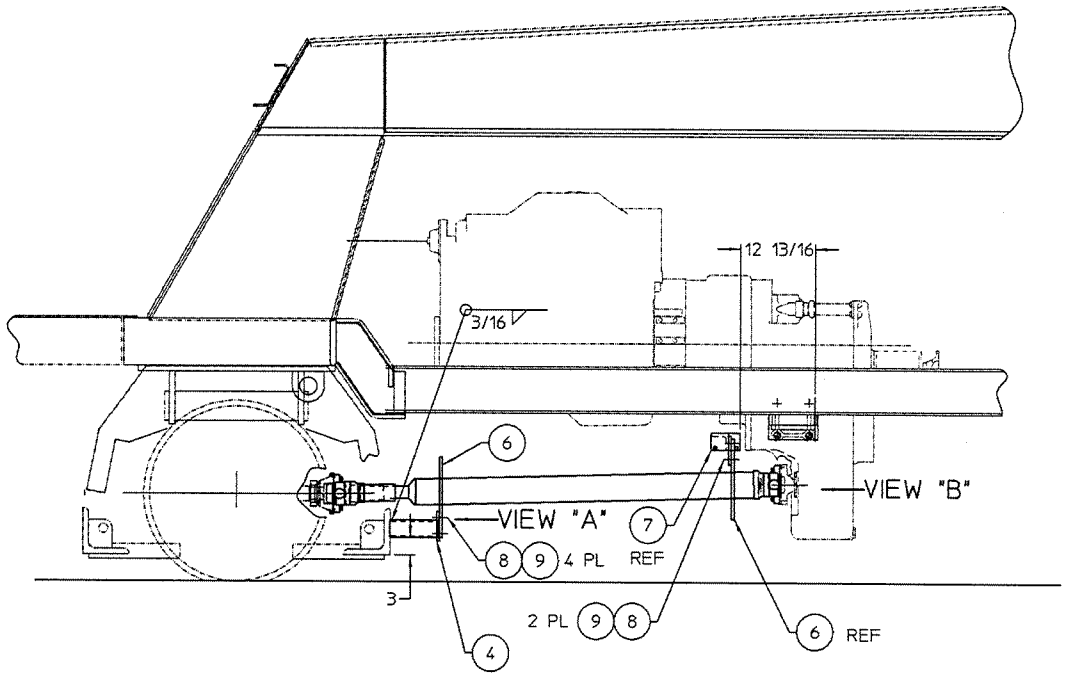

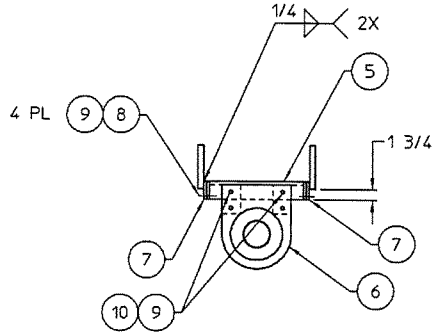

VIEW "B"

SEE SEPARATE PARTS LIST

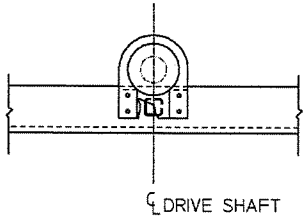

℄ DRIVE SHAFT

VIEW "A"

SCALE=16

FIG NO.	ITEM NO.	PART NUMBER	DESCRIPTION AND MATERIAL SIZE (REF.ONLY)	QTY

IMPLIED TOLERANCES ALL DIMENSIONS ARE IN INCHES-TOLERANCE UNLESS OTHERWISE SPECIFIED									
NOMINAL SIZE RANGE		PLUS OR MINUS			NOMINAL SIZE RANGE		PLUS OR MINUS		
OVER	TO	FRACTION	2 PLACE DECIMAL	3 PLACE DECIMAL	OVER	TO	FRACTION	2 PLACE DECIMAL	3 PLACE DECIMAL
-	1	1/64	.01	.003	6	24	3/64	.03	.008
1	6	1/32	.02	.005	24	-	1/16	.05	.010
ANGULAR DIMENSIONS PLUS OR MINUS 1 DEGREE									
√ ALL MACHINED SURFACES TO HAVE A SURFACE FINISH OF 125 MICROINCHES UNLESS OTHERWISE SPECIFIED.									

WELDING SPECIFICATION

UNLESS OTHERWISE SPECIFIED ALL WELDS SHOULD ADHERE TO FAIRMONT TAMPER WELDING SPECIFICATION NO. 101

WEIGHT lbs.

3rd ANGLE PROJECTION

DO NOT SCALE

SHEET 2 CONT. ON –

DESCRIPTION 124: DRIVESHAFT INSTL

DRAWN PJG	DATE 12-2-96	MACHINE TYPE MARK VI
CHECKED	DATE	
APP-ENG	DATE	
APP-MFG	DATE	
LAST ECR. 8095. 153	CHECKED jpg DATE 12-Feb-97	ENG.DWG.NO. B6692XAD

Fairmont Tamper™ 2401 Edmund Road-Box 20 Cayce-West Columbia, South Carolina 29171-0020 (803) 822-9150

THIS DOCUMENT CONTAINS PROPRIETARY INFORMATION AND SUCH INFORMATION MAY NOT BE DISCLOSED TO OTHERS FOR ANY PURPOSE OR USED FOR MANUFACTURING PURPOSES WITHOUT THE WRITTEN PERMISSION OF FAIRMONT TAMPER.

Engine, Transmission and Fuel System

PARTS LIST

ITEM NO	PART NUMBER	DESCRIPTION	QUANTITY
1	B0730V03	RADIATOR	1
2	4011103	BAFFLE	1
3	B7044XAC	SHROUD WLDT	1
4	A0427Y01	2 PIECE RUBBER MOUNT	6
5	A1203W02	TANK, SURGE	1
6	A0427Y03	RUBBER MOUNT	2
7	BLANK		
8	0-3019004-0-17	MACHINED WASHER	4
9	A1765Y02	DRAIN, RADIATOR	1
10	A7663W01	SHROUD, TOP	1
11	A7662X01	SHROUD, SIDE	2
12	0-3611014-0-08	SIDE INLET MUFFLER	1
13	0-3514001-0-06	MOUNTING BAND (16in)	2
14	0-3513000-0-04	AIR CLEANER	1
15	0-3514013-0-12	AIR INTAKE HOOD	1
16	A0427Y02	MOUNT, RUBBER	2
17	L423613	GOVERNOR	1
18	0-3514017-0-02	MINI-RESTR'R INDICATOR	1
19	L423619	FTG 1/8 FP COUPLING	1
20	A1438T69	THRD'D PIPE 1/8MPx4 1/4	1
21	L420851	FTG 1/8 MP-FP 90°	1
22	0-3012000-0-09	HOSE CLAMP 4-4 1/2 I.D.	1
23	0-3514010-0-20	90° RUBBER ELBOW	1
24	G1776X02	HEAT SHIELD	1
25	0-3012000-0-08	HOSE CLAMP 5-5 1/2 ID	2
26	0-3012000-0-04	HOSE CLAMP (7in)	4
27	0-3514010-0-23	90° RUBBER ELBOW	1
28	D8101T31	TUBING WELDED STEEL	1
29	G1334Y01	TOP RADIATOR PIPING	1
30	G0647YAB	INTAKE WELDMENT	1
31	0-3350000-0-03	FILTER, TRANSMISSION	1
32	0-3019004-0-18	MACHINED WASHER	2
33	D7190T15	MACHINED WASHER	6

ASSEMBLY IDENTIFIER

MK VI IRAQ

ASSEMBLY DESCRIPTION

ER
DR
CK
APP
MF

REVISIONS

NO	ER	DESCRIPTION	DR	CK	APP	MF
A	13116 .23	NEW RELEASE	PJG			
B	100375	ADDED IT-2.	PJG	JOC	JOC	

DWG NO D9684WAE
SHEET 1
CONT ON 2
DESCRIPTION (24) ENGINE INSTALLATION
DRAWN PJG
DATE 06-15-05
CHECKED JOC
DATE 06-20-05
APP JOC
DATE 06-20-06
APP
DATE

SHEET 1
CONT ON 2
LAST ECR 13116 .23
CHECKED dvan
DATE 24-Jun-05
DWG NO D9684WAE

Fairmont Tamper™
2401 Edmund Road-Box 20
Cayce-West Columbia,
South Carolina 29171-0020
(803) 822-9160

PARTS LIST

ITEM NO	PART NUMBER	DESCRIPTION	QUANTITY
34	A0036001	1/4-20 X 1/2 HHCS	10
35	A0061008	1/4 MEDIUM LOCK WASHER	10
36	A0059001	1/4 MEDIUM FLAT WASHER	18
37	A0036003	1/4-20 X 3/4 HHCS	12
38	L41173	1/4-20 ESNA NUT	12
39	A0036032	5/16-18 X 3/4 HHCS	4
40	A0061009	5/16 MED LOCK WASHER	6
41	A0036034	5/16-18 X 1 HHCS	2
42	A0055010	5/16-18 HEX NUT	2
43	L40387	3/8-16 ESNA NUT	6
44	A0036065	3/8-16 X 1 1/4 HHCS	19
45	BLANK		
46	A0036069	3/8-16 X 2 1/4 HHCS	5
47	L425694	1 1/4 JIC/1" ORB ADAPTER	3
48	A0059003	3/8 FLAT WASHER	20
49	A0055012	3/8-16 HEX NUT	33
50	A0036130	1/2-13 X 3 1/4 HHCS	2
51	L41523	1/2-13 ESNA NUT	2
52	0-3011001-0-07	7/8-9 ESNA NUT	6
53	A0036355	7/8-9 X 5 1/2 HHCS	4
54	A0036331	7/8-9 X 7 HHCS	2
55	Z780116-001	SHOCK MOUNT	2
56	G1767Y02	FLEX EXHAUST PIPE	1
57	G1768Y01	EXHAUST EXTENSION	1
58	0-3305024-0-17	3/8 WELD ADAPTER	2
59	A0061010	3/8 MEDIUM LOCK WASHER	27
60	G1775X01	MOUNTING BRKT	2
61	0-3514003-0-24	HUMP HOSE STRAIGHT	1
62	D4906T40	TWO HOLE BRACKET	1
63	BLANK		
64	A0036063	3/8-16 X 1 HHCS	4
65	G0744Y02	MOUNTING BRACKET	1
66	0-1406503-0-01	MUFFLER CLAMP 5" MOD	2

ASSEMBLY IDENTIFIER

MK VI IRAQ

ASSEMBLY DESCRIPTION

ER
DR
CK
APP
MF

DWG NO D9684WAE
SHEET 2
CONT ON 3
DESCRIPTION (24) ENGINE INSTALLATION
DRAWN PJG
DATE 06-15-05
CHECKED JOC
DATE 06-20-05
APP JOC
DATE 06-20-06
APP
DATE

SHEET 2
CONT ON 3
LAST ECR 13116 .23
CHECKED dvan
DATE 24-Jun-05
DWG NO D9684WAE

REVISIONS

NO	ER	DESCRIPTION	DR	CK	APP	MF
A	13116 .23	NEW RELEASE	PJG			
B	100375	QTY ITS-37 & 38 WAS 8.	PJG	JOC	JOC	

Fairmont Tamper™
2401 Edmund Road-Box 20
Cayce-West Columbia,
South Carolina 29171-0020
(803) 822-9160

PARTS LIST

ITEM NO	PART NUMBER	DESCRIPTION	QUANTITY
67	A0071064	3/8-16 X 1 WELD STUD	3
68	0-3612012-0-08	CLAMP (U-BOLT) 5"	1
69	BLANK		
70	BLANK		
71	L423104	HOSE 1/4 M/P (FT)	17
72	L423271	ADAPTER 1/8 MP-1/4 JIC	2
73	0-3304062-0-02	90° ELBOW, 1/8 MP-1/4 FP	1
74	L420853	1/8 MP / 1/4 JIC 90°	2
75	L411366	-4 JIC SW HOSE END	2
76	A0036042	5/16-18 X 3 HHCS	2
77	L40388	5/16-18 ESNA NUT	2
78	0-3304142-0-05	1 1/2 S.F. MOUNTING KIT	2
~~79~~	~~0-3304143-0-13~~	~~1 1/4 JIC/1 1/2 S.F.~~	~~1~~
80	0-3304145-0-12	90° SAE 37°/SPLIT FLNGE	2
81	BLANK		
82	BLANK		
83	BLANK		
84	BLANK		
85	BLANK		
86	BLANK		
87	L422765	3/8-JIC SW HOSE END	1
88	0-3012000-0-17	1" HOSE CLAMP	4
89	A4404T05	1" HEATER HOSE	5
90	A5638T01	LOW PRESSURE HOSE	15
91	L423117	3/8 LP HOSE (FT)	6
92	0-3012000-0-01	HOSE CLAMP	7
93	G1340Y01	RADIATOR HOSE	2
94	0-3304171-0-09	BAND CLAMP T-BOLT	4
95	C8168YAA	WATER HOSE ADAPTOR	1
96	L411407	1/2 NPT PLUG	1
97	L421662	HOSE CLAMP	5
98	0-3610003-0-12	FLEX HOSE	1
99	0-3305010-0-07	1 1/4 HYD HOSE (FT)	46

ASSEMBLY IDENTIFIER

MK VI IRAQ

ASSEMBLY DESCRIPTION

ER
DR
CK
APP
MF

DWG NO D9684WAE
SHEET 3
CONT ON 4
DESCRIPTION (24) ENGINE INSTALLATION
DRAWN PJG
DATE 06-15-05
CHECKED JOC
DATE 06-20-05
APP JOC
DATE 06-20-06
APP
DATE

REVISIONS

NO	ER	DESCRIPTION	DR	CK	APP	MF
A	13116.23	NEW RELEASE	PJG			
B	100375	DEL IT-79, IT-80 WAS 0-3304145-0-04 & QTY WAS 1.	PJG	JOC	JOC	

SHEET 3 CONT ON 4
LAST ECR 13116.23
CHECKED dvan
DATE 24-Jun-05
DWG NO D9684WAE

Fairmont Tamper™
2401 Edmund Road-Box 20
Cayce-West Columbia,
South Carolina 29171-0020
(803) 822-9160

PARTS LIST

ITEM NO	PART NUMBER	DESCRIPTION	QUANTITY
100	L421704	1 1/4 JIC/1 1/4 MP 90°	1
101	L411367	-20 JIC SW HOSE END	8
102	0-3304180-0-09	1 1/4 JIC SW 45°	2
103	F012592	FTG 1 MP / 1 1/4 JIC	2
104	0-3304148-0-12	1 1/4 JIC SW 90°	3
105	BLANK		
106	BLANK		
107	BLANK		
108	BLANK		
109	BLANK		
110	C3446Y05	COOLANT RECOVERY TANK	1
111	G3192X01	COOLANT TANK BRKT	1
112	D3634Y01	TUBE ADAPTOR	1
113	0-3610014-0-10	CURVED RADIATOR HOSE	1
114	L423094	HOSE, VACUUM / 250 PSI	2
115	G3450Y01	PIPE HANGER	1
116	G3552Y01	PIPE HANGER MTG ANGLE	1
117	G3561XAA	FAN GUARD WLDT	1
118	L411376	FTG. 1/2MP-JIC ST	1
119	L422852	1/2 LP HOSE (FT)	10
120	L422853	HOSE END FITTING	2
121	A4488T12	HOSE END FITTING	1
122	A4404T03	3/4 I.D. HEATER HOSE	5
123	A9977Y08	WATER LINE CONNECTOR	1
124	0-3304013-0-03	3/8 JIC/ 1/8 MP ADAPTER	1
125	A0601T93	THREADED ROD	2
126	L423261	HOSE END FTG JIC 1/4"	1
127	0-3610003-0-22	FLEX HOSE (Ø1 1/2)	1
128	0-3304171-0-05	HOSE CLAMP 1.80-2.03	2
129	L424258	1 1/2 KING NIPPLE	1
130	L40477	ST ELBOW 90° MP/FP	1

ASSEMBLY IDENTIFIER

DWG NO D9684WAE

SHEET 4 CONT ON –

DESCRIPTION (24) ENGINE INSTALLATION

DRAWN PJG DATE 06-15-05

CHECKED JOC DATE 06-20-05

APP JOC DATE 06-20-06

APP DATE

MK VI IRAQ

ASSEMBLY DESCRIPTION

ER
DR
CK
APP
MF

REVISIONS

NO	ER	DESCRIPTION	DR	CK	APP	MF
A	13116 .23	NEW RELEASE	PJG			
B	100375	QTY IT-102 WAS 3, IT-103 WAS L411377, & QTY IT-104 WAS 4.	PJG	JOC	JOC	

SHEET 4 CONT ON – LAST ECR 13116 .23 CHECKED DVGN DATE 24-Jun-05 DWG NO D9684WAE

Fairmont Tamper™
2401 Edmund Road-Box 20
Cayce-West Columbia,
South Carolina 29171-0020
(803) 822-9160

ENG.DWG.NO.
D9684WAE

REVISIONS								
NO	ER	DESCRIPTION	ZONE	DR	CK	APP	MF
A	13116 23	NEW RELEASE		PJG			
B	100375	ADDED IT-2, DEL IT-79.		PJG	JOC	JOC	

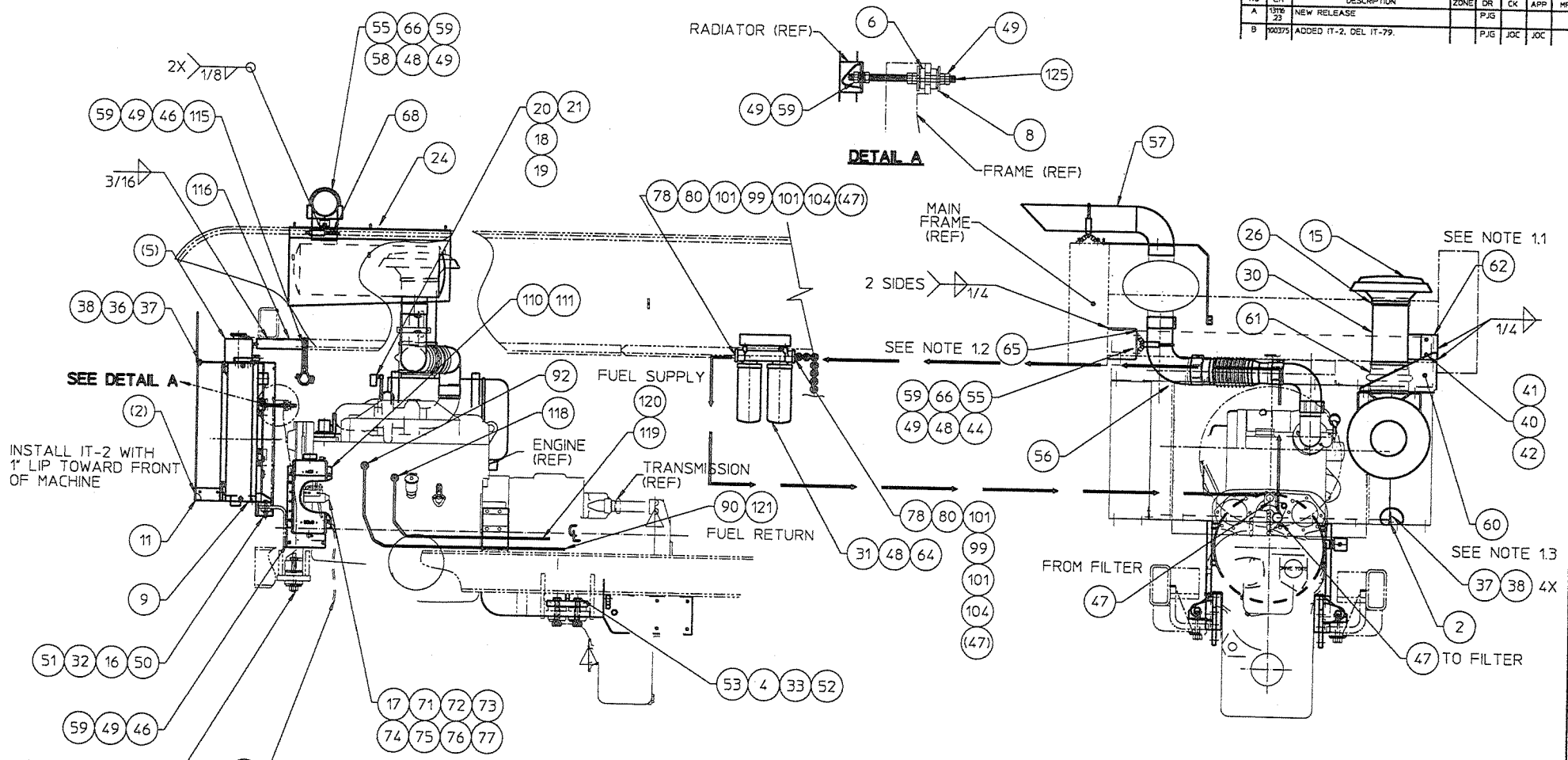

NOTES:

1.1- LOCATE & WELD ITEM 62, TWO HOLE BRKT, TO FRAME.

1.2- LOCATE & WELD ITEM 65, MOUNTING BRACKET, AT ASSY.

1.3- LOCATE & WELD ITEM 60, AIR CLNR BRKTS, TO FRAME AT ASSY.

SEE PARTS LIST

FIG NO.	ITEM NO.	PART NUMBER	DESCRIPTION AND MATERIAL SIZE (REF.ONLY)	QTY

IMPLIED TOLERANCES
ALL DIMENSIONS ARE IN INCHES-TOLERANCE UNLESS OTHERWISE SPECIFIED

NOMINAL SIZE RANGE OVER	TO	PLUS OR MINUS FRACTION	2 PLACE DECIMAL	3 PLACE DECIMAL	NOMINAL SIZE RANGE OVER	TO	PLUS OR MINUS FRACTION	2 PLACE DECIMAL	3 PLACE DECIMAL
-	1	± 1/64	.01	.003	6	24	± 3/64	.03	.006
1	6	± 1/32	.02	.005	24	-	± 1/16	.05	.010

ANGULAR DIMENSIONS PLUS OR MINUS 1 DEGREE

ALL MACHINED SURFACES TO HAVE A SURFACE FINISH OF 125 MICROINCHES UNLESS OTHERWISE SPECIFIED.

WELDING SPECIFICATION

UNLESS OTHERWISE SPECIFIED ALL WELDS SHOULD ADHERE TO FAIRMONT TAMPER WELDING SPECIFICATION NO. 101

WEIGHT

DO NOT SCALE

3RD ANGLE PROJECTION

SHEET 1 CONT. ON 2

DESCRIPTION BY: ENGINE INSTALLATION

DRAWN PJG	DATE 06-15-05	MACHINE TYPE MARK VI
CHECKED JOC	DATE 06-20-05	
APPROVED JOC	DATE 06-20-05	
APPROVED	DATE	
ASY. ECN 13116 23	CHECKED JOC	DATE 24-Jun-05

Fairmont Tamper
2401 Edward Road-Box 20
Cayce-West Columbia,
South Carolina 29171-0020
(803) 822-9143

DWG.NO.
D9684WAE

THIS DOCUMENT CONTAINS PROPRIETARY INFORMATION AND SUCH INFORMATION MAY NOT BE DISCLOSED TO OTHERS FOR ANY PURPOSE OR USED FOR MANUFACTURING PURPOSES WITHOUT THE WRITTEN PERMISSION OF FAIRMONT TAMPER

ENG.DWG NO.
D9684WAE

REVISIONS								
NO	ER	DESCRIPTION	ZONE	DR	CK	APP	MF
A	13116 23	NEW RELEASE		PJG			
B		NO CHANGE					

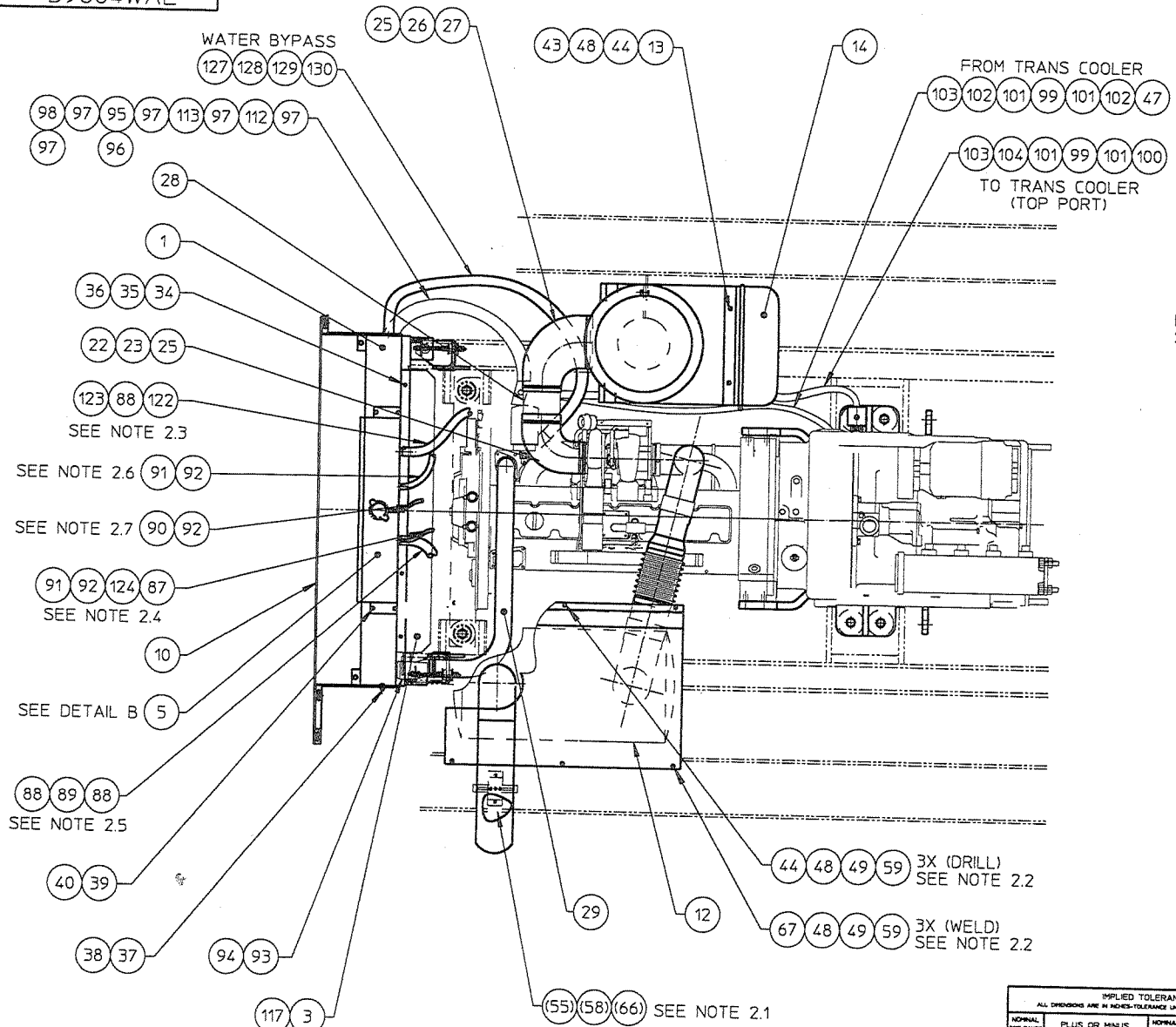

DETAIL B

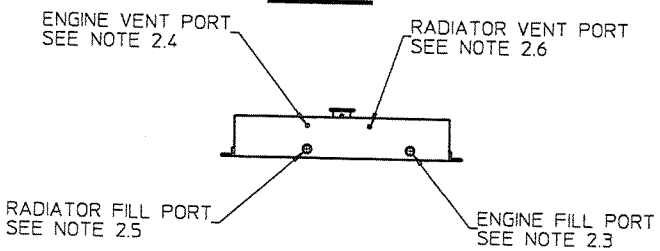

NOTES:

2.1- LOCATE & WELD ITEM 58, WELD ADAPTER AT ASSY. SEE SHEET 1.

2.2- LOCATE ITEM 24, HEAT SHEILD. WELD ITEM 67, WELD STUD, TO TOP OF FRAME. DRILL ENGINE COVER FOR BOLTING ON SHIELD. TACKWELD NUT BENEATH ENGINE COVER.

2.3- ENGINE FILL LINE TO BE PLUMBED INTO 3/4" PORT ON BLOCK NEAR LOWER RADIATOR HOSE CONNECTION. PLUMB SUCH THAT HOSE DOES NOT FALL BELOW PORT.

2.4- ENGINE VENT LINE. REMOVE PETCOCK AT WATER FILTER & REPLACE WITH ITEM 124. HOSE TO 3/8" PORT IN SURGE TANK.

2.5- RADIATOR FILL LINE. PLUMB TO 1" HOSE CONNECTOR ON RIGHT HAND HEADER OF RADIATOR.

2.6- RADIATOR VENT LINE. PLUMB TO 3/8" HOSE CONNECTOR ON RIGHT HAND HEADER OF RADIATOR.

2.7- PLUMB BETWEEN RADIATOR OVERFLOW TUBE & BOTTOM PORT OF RECOVERY TANK. ALSO PLUMB A VENT FROM TOP OF RECOVERY TANK TO A SAFE LOCATION.

SEE SEPARATE PARTS LIST

FIG NO.	ITEM NO.	PART NUMBER	DESCRIPTION AND MATERIAL SIZE (REF.ONLY)	QTY

IMPLIED TOLERANCES
ALL DIMENSIONS ARE IN INCHES-TOLERANCE UNLESS OTHERWISE SPECIFIED

NOMINAL SIZE RANGE OVER	TO	PLUS OR MINUS FRACTION	2 PLACE DECIMAL	3 PLACE DECIMAL	NOMINAL SIZE RANGE OVER	TO	PLUS OR MINUS FRACTION	2 PLACE DECIMAL	3 PLACE DECIMAL
-	1	1/64	.01	.003	6	24	3/64	.03	.006
1	6	1/32	.02	.005	24	-	1/16	.05	.010

ANGULAR DIMENSIONS PLUS OR MINUS 1 DEGREE
ALL MACHINED SURFACES TO HAVE A SURFACE FINISH OF 125 MICROINCHES UNLESS OTHERWISE SPECIFIED.

WELDING SPECIFICATION
UNLESS OTHERWISE SPECIFIED ALL WELDS SHOULD ADHERE TO FAIRMONT TAMPER WELDING SPECIFICATION NO. 101

WEIGHT
SIZE
3rd ANGLE PROJECTION

DO NOT SCALE

SHEET 2 CONT. ON —

DESCRIPTION 02
ENGINE INSTALLATION

DRAWN PJG	DATE 06-15-05	MACHINE TYPE MARK VI
CHECKED JOC	DATE 06-20-05	
APP.ENG JOC	DATE 06-20-05	
APP.MFG	DATE	
LAST ECN 13116 23	CHECKED RYDO	
	REVISE 24-Jun-05	

Fairmont Tamper
2401 Edmund Road-Box 20
Cayce-West Columbia,
South Carolina 29171-0030
(803) 822-9760

ENG.DWG.NO. D9684WAE

THIS DOCUMENT CONTAINS PROPRIETARY INFORMATION AND SUCH INFORMATION MAY NOT BE DISCLOSED TO OTHERS FOR ANY PURPOSE OR USED FOR MANUFACTURING PURPOSES WITHOUT THE WRITTEN PERMISSION OF FAIRMONT TAMPER.

PARTS LIST

ITEM NO	PART NUMBER	DESCRIPTION	QUANTITY	ASSEMBLY IDENTIFIER
1	B9532PAF	CUMMINS DIESEL C8.3-260	1	
2	0-3523010-0-09	TRANSMISSION, 36000 SER.	1	
3	414905	GAUGE PORT ADAPTER	2	
4	A0036132	1/2-13 X 3 3/4 HHCS	2	
5	0-3183005-0-02	ALT 175 AMP PRESTOLITE	1	
6	0-3520002-0-14	SPLINE ADAPTER	1	
7	F010561	O-RING	2	
8	0-3321018-0-10	HYDRAULIC MOTOR	1	
9	H2603X03	SAE C 2-BOLT COVER PLT	1	
10	0-3391005-0-59	ORING - 100 SERIES	2	
11	G0415Y01	3/4 JIC 4BOLT SAE FLANGE	4	
12	D4346Y03	PISTON PUMP (REXROTH)	2	
13	G5629X01	FLANGE SPACER, SAE-C	1	
14	A9977Y05	WATER LINE CONNECTOR	2	
15	0-3012000-0-02	HOSE CLAMP	2	
16	L424832	5/8 HEATER HOSE (FT)	4	
17	0-3610004-0-20	MOLDED RADIATOR HOSE	1	
18	G0325XAA	REAR MOUNT WELDMENT LH	1	
19	G0325XAB	REAR MOUNT WELDMENT RH	1	
20	G0298Y01	PLATE	1	
21	B9432Y01	BOOSTER PUMP	1	
22	L425668	O-RING	1	
23	0-3012000-0-17	1" HOSE CLAMP	6	
24	D1735Y01	SHUT OFF VALVE	2	
25	0-3120002-0-01	START RELAY	1	
26	G0706Y01	SOL MTG BRKT	1	
27	A4404T05	1" HEATER HOSE (FT)	.5	
28	H5133WAC	M12 ENG & TRNS TEMP COND	2	ENGINE & TRANSMISSION
29	BLANK			
30	L420337	1/2" NPT X 5 NIPPLE STR	1	
31	G0578Y01	MULTI-SECTION GEAR PUMP	1	
32	L420277	O-RING	4	
33	H5133WAA	M12 ENG OIL PRESS COND	1	ENGINE

REVISIONS

NO	ER	DESCRIPTION	DR	CK	APP	MF
A	13116 .24	RELEASED	PJG			
D	100382	ADDED ITS-3 & 7.	PJG	JOC	JOC	

IRAQ MK VI

ELECTRIC THROTTLE
VIRTUAL INSTRUMENTATION
STANDARD WORKHEADS

ASSEMBLY DESCRIPTION

ER
DR
CK
APP
MF

Fairmont Tamper™
2401 Edmund Road-Box 20
Cayce-West Columbia,
South Carolina 29171-0020
(803) 822-9160

DWG NO H3193VAC
SHEET 1
CONT ON 2
DESCRIPTION (24) ENG & TRANSMISSION ASSY
DRAWN PJG
DATE 06-20-05
CHECKED JOC
DATE 06-23-05
APP JOC
DATE 06-23-05
APP
DATE

SHEET 1
CONT ON 2
LAST ECR 13116 53
CHECKED DVGN
DATE 29-Sep-05
DWG NO H3193VAC

PARTS LIST

ITEM NO	PART NUMBER	DESCRIPTION	QUANTITY
34	A0036003	1/4-20 X 3/4 HHCS	2
35	L41157	1/4-20 ESNA NUT	2
36	L411336	COUPLING 1/2 NPT	1
37	C8168YAA	WATER HOSE ADAPTER	1
38	L40051	1/2 MP-FP ST ELBOW 90°	1
39	BLANK		
40	G0588Y01	FLEX PLATE BOLT	8
41	A0061032	7/16 HEAVY LOCK WASHER	24
42	A0036066	3/8-16 X 1 1/2 HHCS	16
43	A0061011	3/8 HEAVY LOCK WASHER	16
44	A0060011	1/4 SAE WASHER	2
45	A0038003	1/2-13 X 1 3/4 HHCS GR8	4
46	A0061013	1/2 MEDIUM LOCK WASHER	12
47	A0061023	1/2 HEAVY LOCK WASHER	4
48	G9023WAA	TRACTION DISC. SUB-ASSY.	1
49	A0036131	1/2-13 X 3 1/2 HHCS	2
50	TY766547-021	M16 X 2.00 X 50 MM MHHCS	10
51	TY766547-055	M16 X 2.00 X 60 MM MHHCS	2
52	A0069049	M16 SPRING WASHER	18
53	H3512XAA	CYL BRKT WLDT	1
54	0-3652049-0-11	FEMALE ROD END	1
55	A0036218	3/4-10 X 2 HHCS	4
56	A0061022	3/4 MEDIUM LOCK WASHER	8
57	H5133WAH	M12 TRANS OIL PRESS COND	1
58	0-3470014-0-01	AIR CYLINDER	1
59	A0036103	7/16-14 X 1 1/2 HHCS	4
60	D4313Y14	DOUBLE GEAR PUMP	1
61	A6058Y02	SPL FLG BARB FTG 45°	1
62	0-3304142-0-04	1 1/4 SPLIT FLANGE KIT	1
63	A0036221	3/4-10 X 2 3/4 HHCS	4
64	A0036104	7/16-14 X 1 3/4 HHCS	12
65	A0055016	1/2-13 HEX NUT	4
66	A0209T23	STUD, THREADED	1

ASSEMBLY IDENTIFIER

TRANSMISSION

IRAQ MK VI

ELECTRIC THROTTLE
VIRTUAL INSTRUMENTATION
STANDARD WORKHEADS

ASSEMBLY DESCRIPTION

ER
DR
CK
APP
MF

REVISIONS

NO	ER	DESCRIPTION	DR	CK	APP	MF
A	13116 .24	RELEASED	PJG			
B	13116 .39	IT-60 WAS D4313Y03.	PJG	JOC	JOC	
D		NO CHANGE				

SHEET 2 CONT ON 3 LAST ECR 13116 .53 CHECKED dvcn DATE 29-Sep-05 DWG NO H3193VAC

DWG NO H3193VAC
SHEET 2 CONT ON 3
DESCRIPTION (24) ENG & TRANSMISSION ASSY
DRAWN PJG DATE 06-20-05
CHECKED JOC DATE 06-23-05
APP JOC DATE 06-23-05
APP DATE

Fairmont Tamper™
2401 Edmund Road-Box 20
Cayce-West Columbia,
South Carolina 29171-0020
(803) 822-9160

PARTS LIST

ITEM NO	PART NUMBER	DESCRIPTION	QUANTITY
67	A0209T24	STUD, THREADED	2
68	0-3304009-0-17	1/4 ORB X 1/4 NPTF FTG	1
69	0-3014001-0-07	CLEVIS W/PIN	1
70	G0734Y03	SUPPORT PLATE	2
71	A0037012	1/4-20 X 7/8 HHCS	16
72	BLANK		
73	G9035X01	TRACTION DISCONNECT BRKT	1
74	A0036123	1/2-13 X 1 1/2 HHCS	10
75	G1135XAA	VIB PUMP BRKT	1
76	G1142Y01	SPACER NUT	3
77	A0036110	7/16-20 X 1 HHCS	3
78	L40006	LOCKNUT	2
79	G5807Y01	PUMP BRKT	1
80	A0038081	7/16-14x4 1/2 HHCPS GR8	2
81	A0061028	1/2 HI COLR LOCK WASHER	12
82	BLANK		
83	A0069080	M16 X 2.00 X 45 MM MHHCS	3
84	0-3019002-0-06	.625 HARDENED WASHER	3
85	A0041130	1/2-13 X2 1/2 SOCHCS GR8	4
86	0-3019002-0-20	HARDENED WASHER	8
87	A0059007	5/8 MEDIUM FLAT WASHER	2
88	A0069146	M16 X 2,00 X 60 MM MHHCS	1
89	L40767	1/2-13 ESNA NUT	6
90	A0037016	3/8-16 X 1 1/4 HHCS	2
91	A0061026	3/8 HI-CLR LOCKWASHER	2
92	0-3019002-0-19	HARDENED WASHER	2
93	TZ767816-006	1/2-13 X 2 1/4 HHCS GR8	4
94	BLANK		
95	A0069047	M12 X 1.75 X 60 MM MHHCS	1
96	TY766547-037	M12 X 1.75 X 70 MM MHHCS	1
97	A0069043	M12 X 1.75 NYLOK HEX NUT	2
98	A0069098	M8 PLAIN WASHER	1
99	L40361	FITTING 1/2 FP-3/4 MP	1

ASSEMBLY IDENTIFIER

DWG NO H3193VAC

SHEET 3 CONT ON 4

DESCRIPTION (24) ENG & TRANSMISSION ASSY

DRAWN PJG DATE 06-20-05

CHECKED JOC DATE 06-23-05

APP JOC DATE 06-23-05

APP DATE

IRAQ MK VI

ELECTRIC THROTTLE
VIRTUAL INSTRUMENTATION
STANDARD WORKHEADS

ASSEMBLY DESCRIPTION

ER
DR
CK
APP
MF

SHEET 3 CONT ON 4 LAST ECR 13116.53 CHECKED GVGN DATE 29-Sep-05 DWG NO H3193VAC

REVISIONS

NO	ER	DESCRIPTION	DR	CK	APP	MF
A	13116.24	RELEASED	PJG			
D		NO CHANGE				

Fairmont Tamper™
2401 Edmund Road-Box 20
Cayce-West Columbia,
South Carolina 29171-0020
(803) 822-9160

PARTS LIST

ITEM NO	PART NUMBER	DESCRIPTION	QUANTITY
100	G8103T49	SPACER	2
101	L411398	1/2 MP/3/8 FP REDUCER	1
102	G1214Y02	1 1/4 JIC 4BOLT 90° FLG	1
103	G0415Y03	1 1/4 JIC 4BOLT FLG STR	1
104	A0041132	1/2-13 X 3 SOCHCS GR8	8
105	L420279	O-RING	2
106	A0059005	1/2 FLAT WASHER	2
107	A0059004	7/16 FLAT WASHER	6
108	G9028Y01	COVER PLATE	2
109	G9036X01	COVER GASKET	2
110	H5977YAA	M12 THROTTLE ACT ASSY	1
111	H3230X02	ACTR BRKT	1
112	TY766547-014	M10 X 1.50 X 25 MM MHHCS	3
113	0-3020000-0-11	METRIC LOCK WASHER	3
114	H3228Y01	THROTTLE LEVER	1
115	A0069006	M6x1.00x16MMHHCSDIN 933	2
116	0-3020000-0-10	METRIC LOCK WASHER	2
117	0-3652048-0-05	ROD END W/STUD	1
118	L423234	1" ORING - FP STR	1
119	L411415	1" MP HEX NIPPLE	1
120	H3199X01	SENSOR ADAPTOR	1
121	A0728Y27	SPLINE COUPLER	1
122	TY766547-029	M16 X 2.00 X 25 MM MHHCS	6
123	A9977Y04	1"HOSE CONN.- 3/4 MP	1
124	A0055032	1/4-28 HEX NUT	1
125	A0061008	1/4 MEDIUM LOCK WASHER	17
126	D3634Y01	TUBE ADAPTER	1
127	L421662	HOSE CLAMP	1
128	G9037X01	SPLINE ADAPTER	1
129	0-3013000-0-11	SNAP RING, INTERNAL	1
130	L422997	1/4 NPT PIPE PLUG	2
131	G9036X02	GASKET, BOX MOUNT	1
132	A0036165	9/16-12 X 1 1/2 HHCS	4

ASSEMBLY IDENTIFIER

DWG NO H3193VAC

SHEET 4 CONT ON 5

DESCRIPTION (24) ENG & TRANSMISSION ASSY

DRAWN PJG DATE 06-20-05

CHECKED JOC DATE 06-23-05

APP JOC DATE 06-23-05

APP DATE

IRAQ MK VI

ELECTRIC THROTTLE
VIRTUAL INSTRUMENTATION
STANDARD WORKHEADS

ASSEMBLY DESCRIPTION

ER
DR
CK
APP
MF

REVISIONS

NO	ER	DESCRIPTION	DR	CK	APP	MF
A	13116 .24	RELEASED	PJG			
D	100382	IT-104 WAS A0041128.	PJG	JOC	JOC	

SHEET 4 CONT ON 5

LAST ECR 13116 53

CHECKED dvon DATE 29-Sep-05

DWG NO H3193VAC

Fairmont Tamper™
2401 Edmund Road-Box 20
Cayce-West Columbia,
South Carolina 29171-0020
(803) 822-9160

PARTS LIST

ITEM NO	PART NUMBER	DESCRIPTION	QUANTITY
133	A0061014	9/16 MED LK WASHER	4
134	0-3015002-0-62	CLEVIS PIN	1
135	A0059002	5/16 MED FLAT WASHER	1
136	A0068046	1/8 X 3/4 COTTER PIN	1
137	0-3652053-0-02	MALE ROD END	1
138	A0056009	1/2-20 HEX JAM NUT	1
139	A7081Y01	PRESSURE SWITCH	1
140	A1556Y20	WATER TEMP SWITCH	1

ASSEMBLY IDENTIFIER

DWG NO H3193VAC

SHEET 5 CONT ON -

DESCRIPTION (24) ENG & TRANSMISSION ASSY

DRAWN PJG DATE 06-20-05

CHECKED JOC DATE 06-23-05

APP JOC DATE 06-23-05

APP DATE

SHEET 5 CONT ON - LAST ECR 13116.53 CHECKED dvan DATE 29-Sep-05

DWG NO H3193VAC

REVISIONS

NO	ER	DESCRIPTION	DR	CK	APP	MF
A	13116.24	RELEASED	PJG			
C	13116.53	ADDED ITEMS 139 & 140.	PJG	JOC	JOC	
D		NO CHANGE				

IRAQ MK VI

ELECTRIC THROTTLE
VIRTUAL INSTRUMENTATION
STANDARD WORKHEADS

ASSEMBLY DESCRIPTION

ER
DR
CK
APP
MF

Fairmont Tamper™
2401 Edmund Road-Box 20
Cayce-West Columbia,
South Carolina 29171-0020
(803) 822-9160

ENG/DWG.NO. H3193VAC

REVISIONS							
NO.	ER	DESCRIPTION	ZONE	DR.	CK	APP	MF
A	13176 24	NEW RELEASE		PJG			
C	13176 53	ADDED IT-139.		PJG	JOC	JOC	
D	00367	ADDED ITS-3 & 7.		PJG	JOC	JOC	

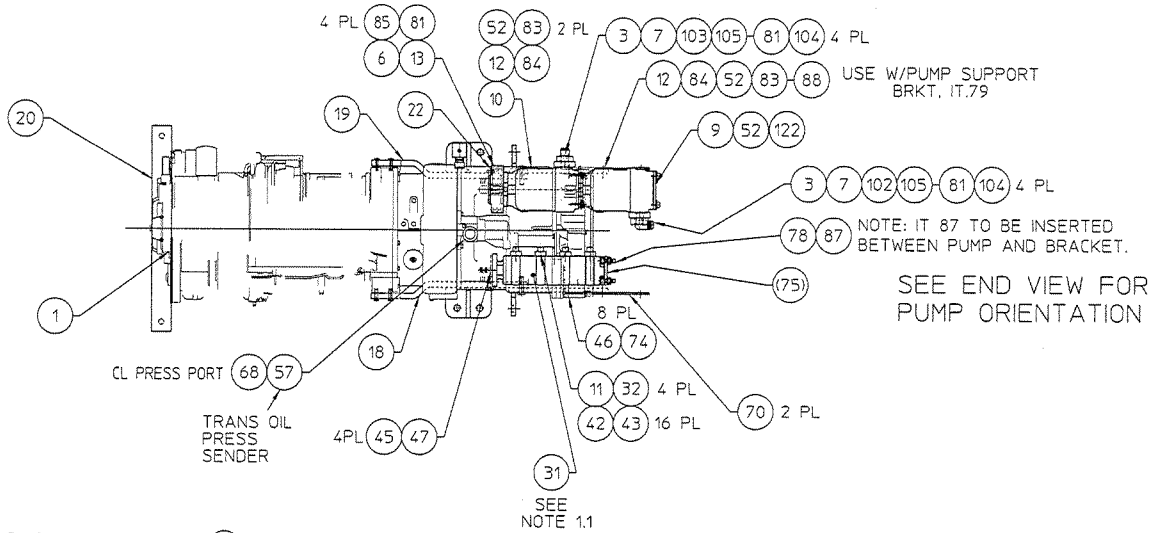

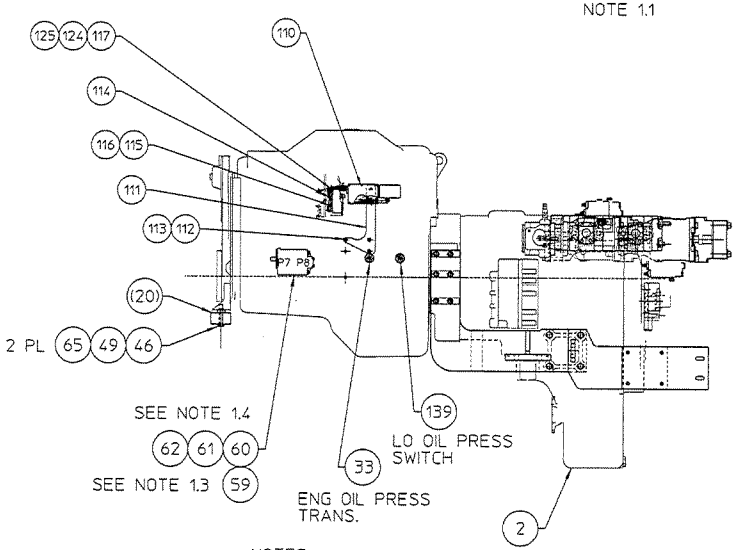

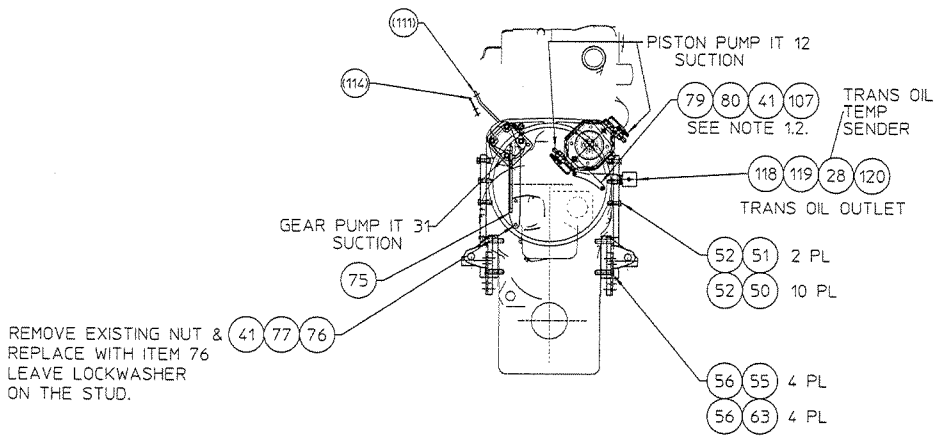

NOTES:

1.1 SEAL PUMP WITH BLUE RTV SILICONE.

1.2 USE WASHERS, IT.107 AS NEEDED TO FILL GAP BETWEEN TRANSMISSION & BRKT, IT.79.

1.3 WHEN USING IT-62, 1 1/4 SPLIT FLANGE KIT, REPLACE BOLTS IN KIT W/IT-59, 7/16-14 X 1 1/4 HHCS.

1.4 TO MOUNT ITEM 60, DOUBLE GEAR PUMP, TO THE AIR COMPRESSOR, USE EXISTING HARDWARE WITH BLUE LOCTITE & SEAL WITH BLUE RTV SILICONE.

SEE NOTES ON SHEET 2 & 3 BEFORE ASSEMBLY.

SEE SEPARATE PARTS LIST

FIG NO.	ITEM NO.	PART NUMBER	DESCRIPTION AND MATERIAL SIZE (REF ONLY)	QTY

WELDING SPECIFICATION: UNLESS OTHERWISE SPECIFIED ALL WELDS SHOULD ADHERE TO FAIRMONT TAMPER WELDING SPECIFICATION NO. 101

DESCRIPTION: ENG & TRANSMISSION ASSY

MACHINE TYPE: MARK VI

IRAQ 56 1/2 GA

DRAWN PJG 06-26-05 · REVISED JOC 06-23-05 · APPROVED JOC 06-23-05

Fairmont Tamper

DO NOT SCALE

SHEET 1 OF 2

H3193VAC

THIS DOCUMENT CONTAINS PROPRIETARY INFORMATION AND SUCH INFORMATION MAY NOT BE DISCLOSED TO OTHERS FOR ANY PURPOSE OR USED FOR MANUFACTURING PURPOSES WITHOUT THE WRITTEN PERMISSION OF FAIRMONT TAMPER.

ENG-DWGNO. H3193VAC

REVISIONS							
NO	ER	DESCRIPTION	ZONE	DR	CK	APP	MP
A	13116 24	NEW RELEASE		PJG			
C	13116 53	ADDED IT-140.		PJG	JOC	JOC	
D	100302	ADDED NOTES TO ITS 140 & 28.		PJG	JOC	JOC	

ENGINE RH SIDE VIEW

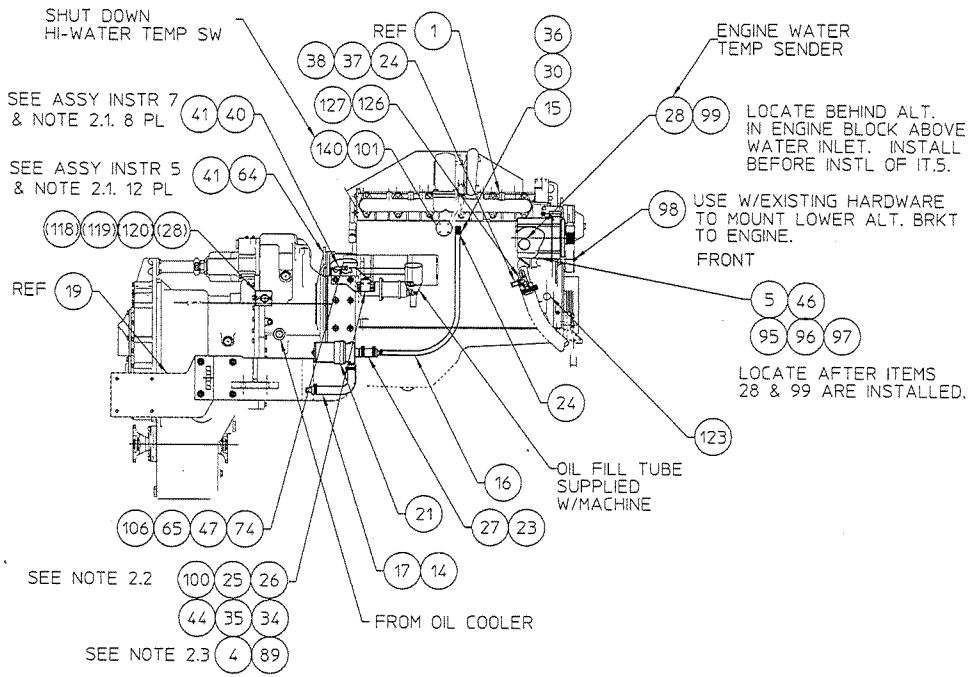

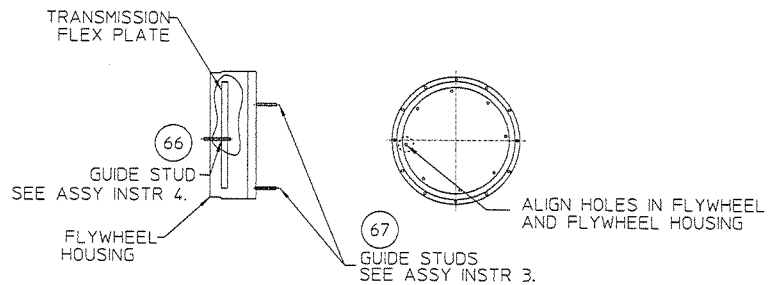

NOTES

2.1 ITEM 40, TORQUE TO 58-64 FT-LBS. ITEM 64, TORQUE TO 53-60 FT-LBS. (SEE ASSEMBLY INSTRUCTIONS)

2.2 BEFORE MOUNTING ITEM 26, SOL MTG BRKT, BACK OUT 2 TOP SCREWS (60 MM LONG) AND WASHERS THAT MT ITEM 19, REAR MOUNT WELDMENT RH, TO ENGINE. PUT MOUNTING BRACKET IN PLACE AND REPLACE HARDWARE TO COMPENSATE FOR BRKT THICKNESS.

2.3 USE ITEMS 4 AND 89 TO MOUNT OIL FILL PIPE, PROVIDED WITH ENGINE, TO ITEM 26, SOL MTG BRKT. CUT PROVIDED HOSE AS NECESSARY TO CONNECT OIL FILL TUBE TO NIPPLE MOUNTED ON ENGINE.

ASSEMBLY INSTRUCTIONS

1. REMOVE ALL BURRS FROM FLYWHEEL MOUNTING FACE AND NOSE PILOT BORE. CLEAN DRIVE PLATE SURFACE WITH SOLVENT. DRY THOROUGHLY.
2. MEASURE AND RECORD ENGINE CRANKSHAFT END PLAY.
3. INSTALL TWO 3.50IN(88.9MM) LONG TRANSMISSION-TO-FLYWHEEL HOUSING GUIDE STUDS, ITEM 67, IN THE ENGINE FLYWHEEL HOUSING AS SHOWN. ROTATE THE ENGINE FLYWHEEL TO ALIGN A DRIVE PLATE MOUNTING SCREW HOLE WITH THE FLYWHEEL HOUSING ACCESS HOLE.
4. INSTALL A 4.00IN(101.6MM) LONG DRIVE PLATE LOCATING STUD, ITEM 66, IN A DRIVE PLATE NUT. ALIGN THE LOCATING STUD WITH THE FLYWHEEL HOLE POSITIONED IN STEP NO. 3.
5. LOCATE TRANSMISSION ON FLYWHEEL HOUSING ALIGNING DRIVE PLATE TO FLYWHEEL AND TRANSMISSION TO FLYWHEEL HOUSING.

   INSTALL TRANSMISSION-TO-FLYWHEEL HOUSING BOLTS & LOCK WASHERS (ITEMS 41 & 64) AND TIGHTEN TO SPECIFIED TORQUE (SEE NOTE 1). REMOVE TRANSMISSION-TO-ENGINE GUIDE STUDS. INSTALL REMAINING BOLTS & LOCKWASHERS AND TIGHTEN.
6. REMOVE DRIVE PLATE LOCATING STUD.
7. INSTALL FLEX PLATE BOLTS AND LOCKWASHERS (ITEMS 40 & 41) ONE AT A TIME ROTATING THE ENGINE FLYWHEEL TO INSTALL ALL EIGHT BOLTS & LOCKWASHERS; SNUG EACH BOLT BUT DO NOT TIGHTEN. AFTER ALL EIGHT BOLTS HAVE BEEN INSTALLED, TORQUE EACH ONE AS SPECIFIED (SEE NOTE 1). THIS WILL REQUIRE TORQUING A BOLT AND ROTATING THE ENGINE FLYWHEEL UNTIL ALL BOLTS HAVE BEEN PROPERLY TIGHTENED.
8. MEASURE ENGINE CRANKSHAFT END PLAY AFTER TRANSMISSION HAS BEEN COMPLETELY INSTALLED ON ENGINE. THIS VALUE MUST BE WITHIN .001 INCH OF THE END PLAY RECORDED IN STEP NO. 2.

SEE SEPARATE PARTS LIST

SEE NOTES ON SHEETS 1 & 3 BEFORE ASSEMBLY.

FIG NO.	ITEM NO.	PART NUMBER	DESCRIPTION AND MATERIAL SIZE (REF.ONLY)	QTY

APPLIED TOLERANCES — ALL DIMENSIONS ARE IN NONES-TOLERANCE UNLESS OTHERWISE SPECIFIED

NOMINAL SIZE RANGE		PLUS OR MINUS			NOMINAL SIZE RANGE		PLUS OR MINUS		
OVER	TO	FRACTION	3 PLACE DECIMAL	5 PLACE DECIMAL	OVER	TO	FRACTION	3 PLACE DECIMAL	5 PLACE DECIMAL
-	1	1/32	.01	.005	6	24	1/16	.03	.004
1	6	1/64	.02	.005	24	-	1/8	.05	.010

ANGULAR DIMENSIONS PLUS OR MINUS 1 DEGREE

ALL MACHINED SURFACES TO HAVE A SURFACE FINISH OF 125 MICROINCHES UNLESS OTHERWISE SPECIFIED.

WELDING SPECIFICATION: UNLESS OTHERWISE SPECIFIED ALL WELDS SHOULD ADHERE TO FAIRMONT TAMPER WELDING SPECIFICATION NO. 101

WEIGHT 1=6 — DO NOT SCALE

DESCRIPTION: ENG & TRANSMISSION ASSY

DRAWN PJG 06-20-05 — MACHINE TYPE MARK VI — IRAQ 56 1/2 GA

CHECKED JOC 06-23-05

APPROVED JOC 06-23-05

Fairmont Tamper — 1201 Railroad Road-Box 39, Fairmont, West Virginia 26554 (304)363-3000 FAX 363-3400

CAGE CODE 13116 — CHECKED JOC — ORIGINAL 29-560-04

ORIGINAL H3193VAC

SHEET 2 OF 3

THIS DOCUMENT CONTAINS PROPRIETARY INFORMATION AND SUCH INFORMATION MAY NOT BE DISCLOSED TO OTHERS FOR ANY PURPOSE OR USED FOR MANUFACTURING PURPOSES WITHOUT THE WRITTEN PERMISSION OF FAIRMONT TAMPER.

ENGDWGNO. H3193VAC

REVISIONS							
NO	ER	DESCRIPTION	ZONE	DR	CK	APP	MF
A	13116-24	NEW RELEASE		PJG			
D		NO CHANGE					

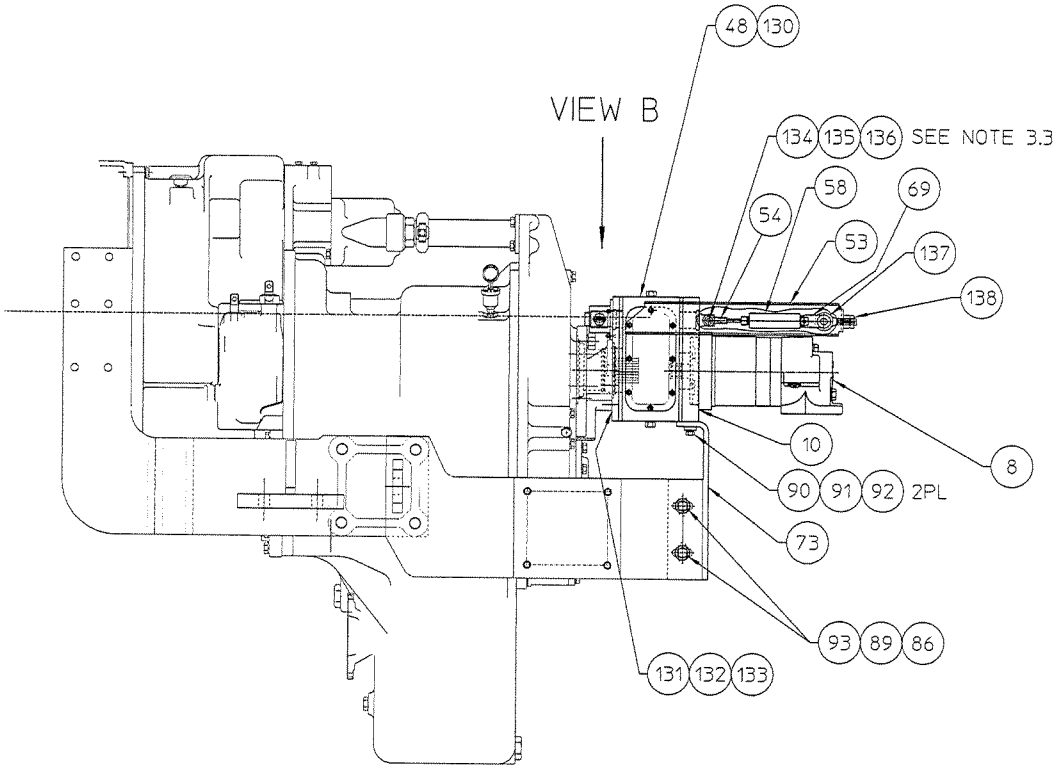

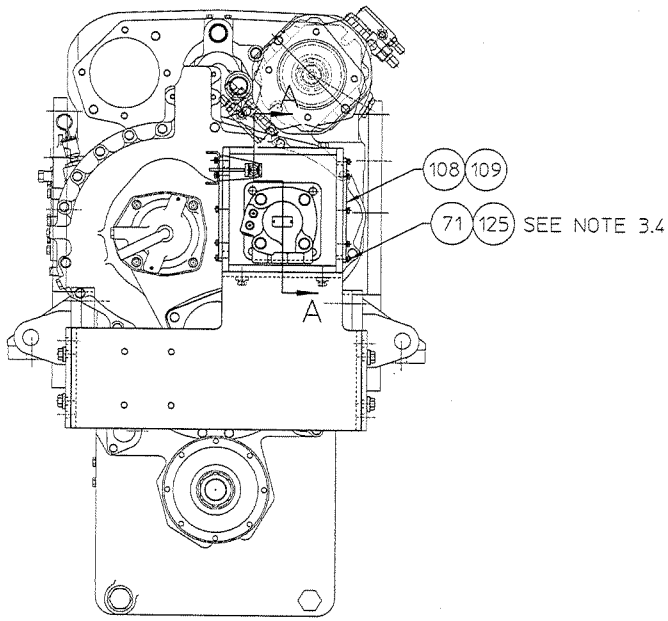

NOTES:

3.1 SET IT-129, SNAP RING, IN SHALLOWEST GROOVE.

3.2 SLIDE ITEM 121 INTO SHIFTER FORK. ALIGN ITEM 121 WITH SPLINES ON TRANSMISSION PTO SHAFT AND BOLT ITEM 48 TO BACK OF TRANSMISSION. INSERT ITEM 128, SPLINE ADAPTER, THROUGH REAR OF ITEM 48 AND INTO THE END OF PTO SHAFT.

3.3 ATTACH ROD END TO CYLINER ROD USING LOCTITE 242 (BLUE).

3.4 SEAL THREADS USING HYDRAULIC THREAD SEALANT, LOCTITE 569 (BROWN).

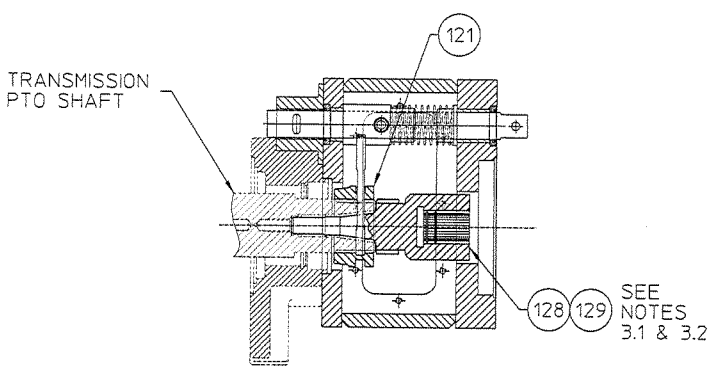

SECTION A-A

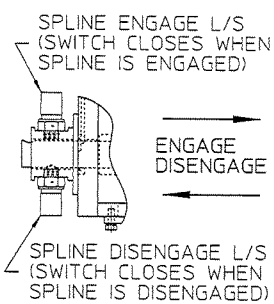

VIEW B

SEE SEPARATE PARTS LIST

SEE NOTES ON SHEET 1 & 2 BEFORE ASSEMBLY.

SCALE=3.5

FIG NO.	ITEM NO.	PART NUMBER	DESCRIPTION AND MATERIAL SIZE (REFONLY)	QTY

IMPLIED TOLERANCES — ALL DIMENSIONS ARE IN INCHES-TOLERANCE UNLESS OTHERWISE SPECIFIED

NOMINAL SIZE RANGE OVER	TO	PLUS OR MINUS FRACTION	2 PLACE DECIMAL	3 PLACE DECIMAL	NOMINAL SIZE RANGE OVER	TO	PLUS OR MINUS FRACTION	2 PLACE DECIMAL	3 PLACE DECIMAL
-	1	1/32	.01	.010	6	24	1/64	.03	.005
1	6	1/16	.02	.005	24	-	1/32	.05	.010

ANGULAR DIMENSIONS PLUS OR MINUS 1 DEGREE

ALL MACHINED SURFACES TO HAVE A SURFACE FINISH OF 125 MICROINCHES UNLESS OTHERWISE SPECIFIED.

WELDING SPECIFICATION: UNLESS OTHERWISE SPECIFIED ALL WELDS SHOULD ADHERE TO FAIRMONT TAMPER WELDING SPECIFICATION NO. 101

DO NOT SCALE

DESCRIPTION: ENG & TRANSMISSION ASSY

DRAWN PJG 06-16-05 — MACHINE TYPE MARK VI — IRAD 56 1/2 GA

CHECKED JOC 06-23-05

APPROVED JOC 06-23-05

APPROVED DATE

Fairmont Tamper

LAST REVISED 13116 — CHECKED RWD 22-Sep-06

SHEET 3 OF 3

SHEET DRAWING H3193VAC

THIS DOCUMENT CONTAINS PROPRIETARY INFORMATION AND SUCH INFORMATION MAY NOT BE DISCLOSED TO OTHERS FOR ANY PURPOSE OR USED FOR MANUFACTURING PURPOSES WITHOUT THE WRITTEN PERMISSION OF FAIRMONT TAMPER.

ENG.DWG.NO.
H5977YAA

REVISIONS							
NO	ER	DESCRIPTION	ZONE	DR	CK	APP	MF
1	12509 .40	NEW RELEASE		PJG			
B	12450 .21	ADDED NOTE 3.		PJG	AML	AML	

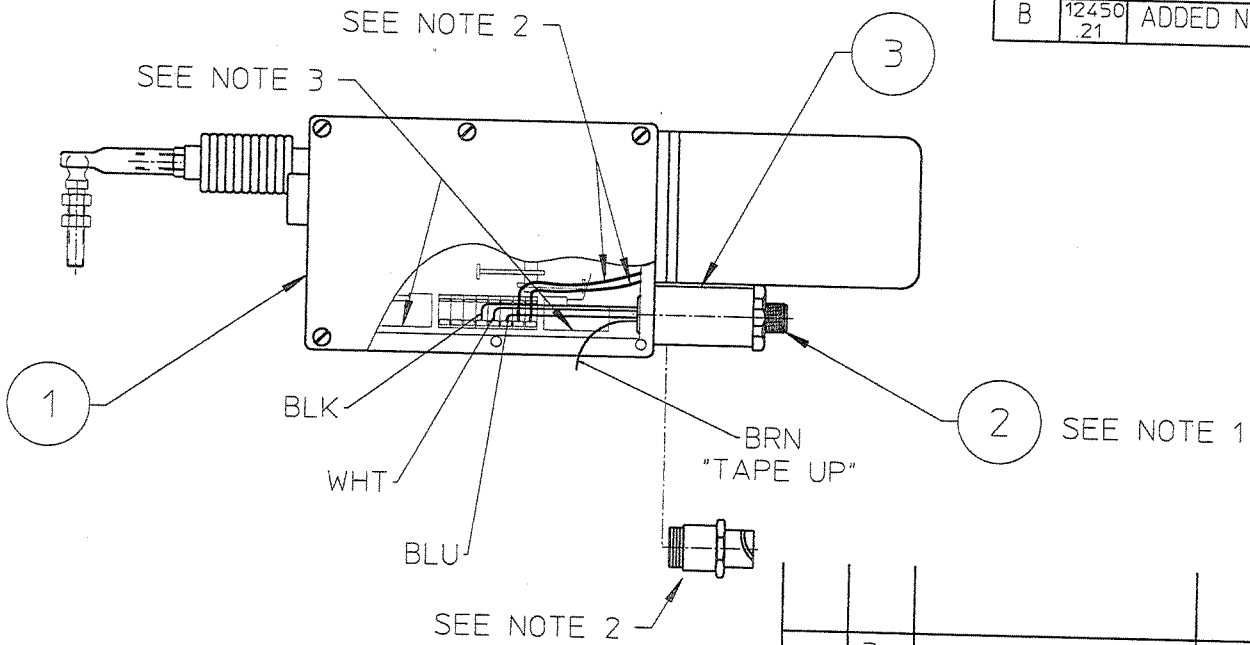

NOTES:

1. CUT OFF EXCESS LENGTH OF WIRE ON IT-2, RECEPTACLE & STRIP ENDS 1/4". DISCARD LOCKNUT.
2. REMOVE & DISCARD EXISTING CONNECTOR. RED & BLACK WIRES FROM ACTUATOR MOTOR TO STAY CONNECTED AT TERMINAL STRIP. WHERE IT-3, ADAPTER, SCREWS INTO THE ACTUATOR USE BLUE LOCTITE TO SEAL THREADS.
3. ADD WHITE EPOXY, H5527Y02, TO THE TWO LIMIT SWITCHES TO SECURE THEM AND PREVENT BREAKAGE.

FIG NO.	ITEM NO.	PART NUMBER	DESCRIPTION AND MATERIAL SIZE (REF.ONLY)	QTY
	3	H6017Y01	ADAPTER 3/4-20 - 1/2 NPS	1
	2	185639	RECEPTACLE, 4 PIN	1
	1	A1628Y02	ACTUATOR, LINEAR	1

IMPLIED TOLERANCES
ALL DIMENSIONS ARE IN INCHES-TOLERANCE UNLESS OTHERWISE SPECIFIED

NOMINAL SIZE RANGE		PLUS OR MINUS			NOMINAL SIZE RANGE		PLUS OR MINUS		
OVER	TO	FRACTION	2 PLACE DECIMAL	3 PLACE DECIMAL	OVER	TO	FRACTION	2 PLACE DECIMAL	3 PLACE DECIMAL
-	1	1/64	.01	.003	6	24	3/64	.03	.008
1	6	1/32	.02	.005	24	-	1/16	.05	.010

ANGULAR DIMENSIONS PLUS OR MINUS 1 DEGREE

ALL MACHINED SURFACES TO HAVE A SURFACE FINISH OF 125 MICROINCHES UNLESS OTHERWISE SPECIFIED

WEIGHT lbs.

3rd ANGLE PROJECTION

DO NOT SCALE

WELDING SPECIFICATION
UNLESS OTHERWISE SPECIFIED ALL WELDS SHOULD ADHERE TO FAIRMONT TAMPER WELDING SPECIFICATION 101

DESCRIPTION (24)
M12 THROTTLE ACT ASSY

DRAWN	DATE	MACHINE TYPE
PJG	06-13-02	MK IV JUPITER
CHECKED HW	DATE 06-17-02	
APP-ENG JOC	DATE 06-17-02	
SHEET 1	CONT. ON —	
LAST ECR. 12450 .21	CHECKED dvan	
	DATE 27-May-04	

Fairmont Tamper™
2401 Edmund Road-Box 20
Cayce-West Columbia,
South Carolina 29171-0020
(803) 822-9160

ENG.DWG.NO.
H5977YAA

PARTS LIST

ITEM NO	PART NUMBER	DESCRIPTION	QUANTITY
1	L40387	3/8-16 ESNA NUT	2
2	A0036036	5/16-18 X 1 1/2 HHCS	2
3	L41582	5/16-18 ESNA NUT	2
4	G4652XAA	COVER WELDMENT, SIDE	1
5	G4652XAB	COVER WELDMENT SIDE	1
6	G5034WAB	FRONT COVER WELDMENT	1
7	G3575W03	MID ENG COVER	1
8	G3575W05	REAR ENGINE COVER	1
9	L421447	STAPLE & HASP	2
10	A4476Y02	PLATE, ROD ATTACHMENT	2
11	A4540T01	PULL DOWN CATCH	1
12	A4506YAA	PROP ROD WLDT	2
13	G0571Y01	ANGLE, EQUAL LEGS	2
14	A0060015	1/2 SAE WASHER	4
15	A0068014	1/8 X 1-1/4 COTTER PIN	4
16	A0055010	5/16-18 HEX NUT	16
17	A0036030	5/16-18 X 1/2 HHCS	16
18	A0036034	5/16-18 X 1 HHCS	8
19	A0061009	5/16 MED LOCK WASHER	24
20	G0296WAB	FRONT DOOR WELDMENT	2
21	G5036X01	FORMED SUPPORT BAR	1
22	G5038Y01	SUPPORT ANGLE	2
23	G5037X02	HINGE SADDLE	4
24	D7556Y02	PADLOCK LUG	2
25	A0036066	3/8-16 X 1 1/2 HHCS	2

ASSEMBLY IDENTIFIER

IRAQ MK VI STD (56 1/2 GA)

ASSEMBLY DESCRIPTION

DWG NO G0223WAK

SHEET 1 CONT ON –

DESCRIPTION (24) ENGINE COVERS ASSY

DRAWN PJG DATE 06-15-05

CHECKED JOC DATE 06-20-05

APP JOC DATE 06-20-05

APP DATE

REVISIONS

NO	ER	DESCRIPTION	DR	CK	APP	MF
A	13116 23	RELEASE	PJG			

SHEET 1 CONT ON – LAST ECR 13116 23 CHECKED dvan DATE 24-Jun-05 DWG NO G0223WAK

Fairmont Tamper™
2401 Edmund Road-Box 20
Cayce-West Columbia,
South Carolina 29171-0020
(803) 822-9160

ENG.DWG.NO.
G0223WAK

REVISIONS								
NO	ER	DESCRIPTION	ZONE	DR	CK	APP	MF
A	13116 23	RELEASE		PJG			

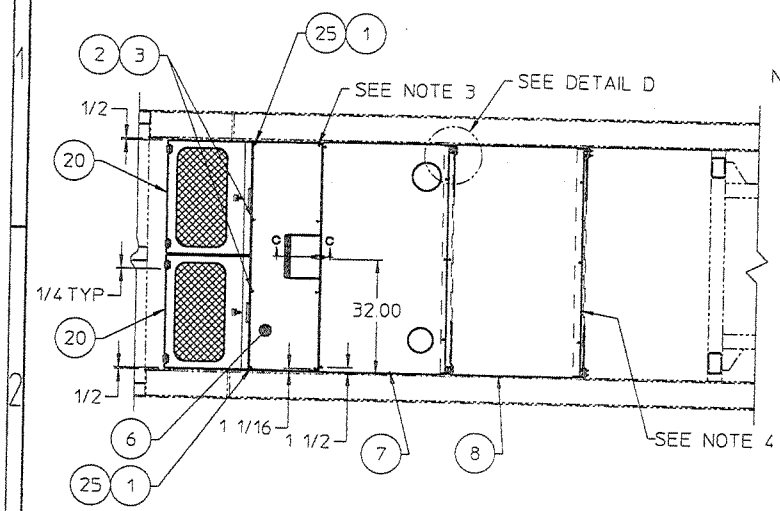

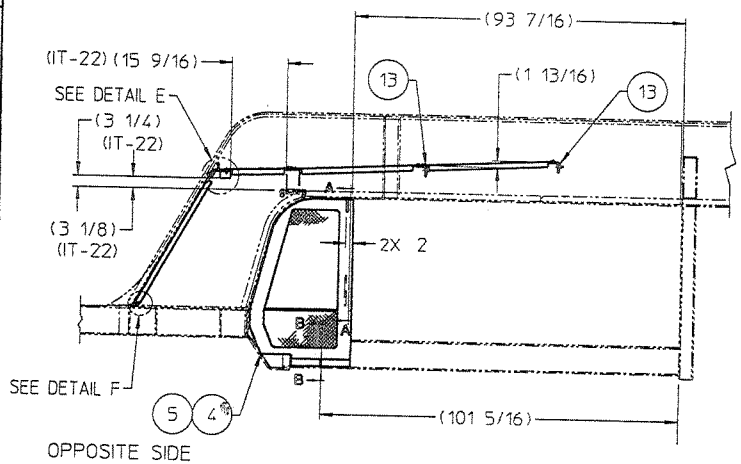

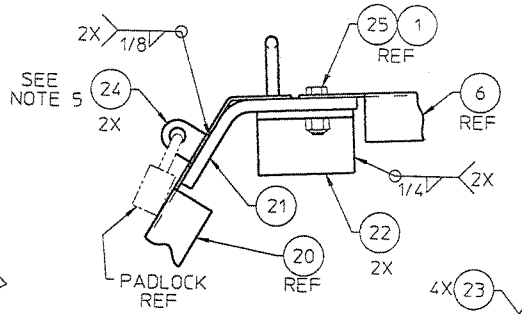

DETAIL E

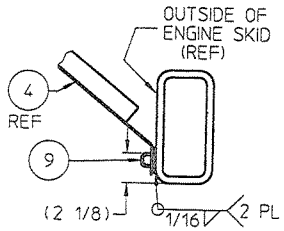

SECTION B-B

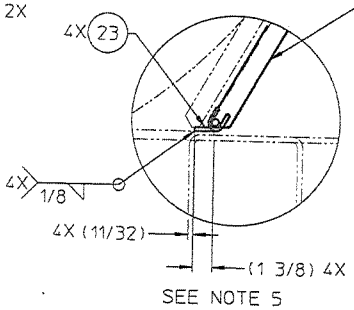

DETAIL F

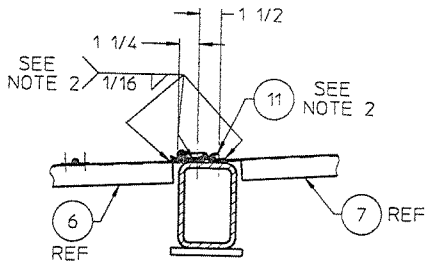

SECTION C-C

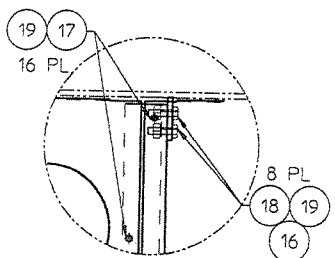

DETAIL D

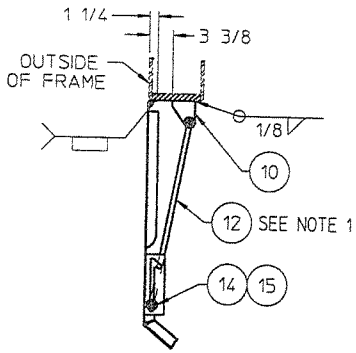

TYP 2 DOORS
SECTION A-A

NOTES:

1. REVERSE LOCATION OF UPPER ROD ATTACHMENT ON RIGHT SIDE OF MACHINE.
2. WELD CATCH OF ITEM 11, FLUSH WITH EDGE OF ITEM 7, TOP COVER. POSITION LATCH SNUGLY IN CATCH, HOLD IN PLACE AND WELD AS SHOWN TO ITEM 6, FRONT COVER.
3. THREAD 5/16-18 THRU TOP OF 4X6 TUBE, MAIN FRAME MEMBER, 7 HOLES USING COVERS AS TEMPLATES.
4. THREAD 5/16-18 THRU TOPS OF IT 13, ANGLES, 9 HOLES USING COVERS AS TEMPLATES.
5. PLACE FRONT DOORS, IT-20, AS SHOWN WITH PIVOT ROD SEATED IN HINGE SADDLES, IT-23. POSITION DOORS SO THAT THERE IS AN EVEN GAP BETWEEN DOORS AND TACK HINGE SADDLES IN PLACE. TACK PADLOCK LUGS, IT-24, ONTO FORMED BAR, IT-21. REMOVE DOORS AND WELD HINGE SADDLES AND PADLOCK LUGS.

SEE PARTS LIST

FIG NO.	ITEM NO.	PART NUMBER	DESCRIPTION AND MATERIAL SIZE (REF.ONLY)	QTY

IMPLIED TOLERANCES
ALL DIMENSIONS ARE IN INCHES-TOLERANCE UNLESS OTHERWISE SPECIFIED

NOMINAL SIZE RANGE OVER	TO	PLUS OR MINUS FRACTION	2 PLACE DECIMAL	3 PLACE DECIMAL	NOMINAL SIZE RANGE OVER	TO	PLUS OR MINUS FRACTION	2 PLACE DECIMAL	3 PLACE DECIMAL
-	1	1/64	.01	.003	6	24	3/64	.03	.008
1	6	1/32	.02	.005	24	-	1/16	.05	.010

ANGULAR DIMENSIONS PLUS OR MINUS 1 DEGREE
ALL MACHINED SURFACES TO HAVE A SURFACE FINISH OF 125 MICRONCHES UNLESS OTHERWISE SPECIFIED

WELDING SPECIFICATION
UNLESS OTHERWISE SPECIFIED ALL WELDS SHOULD ADHERE TO FAIRMONT TAMPER WELDING SPECIFICATION NO. 101

WEIGHT DIA.
3rd ANGLE PROJECTION
DO NOT SCALE
SHEET 1 CONT. ON

DESCRIPTION OF: ENGINE COVERS ASSY

DRAWN PJG	DATE 06-15-05	MACHINE TYPE MARK VI	
CHECKED JOC	DATE 06-20-05		
APPROVED JOC	DATE 06-20-05		
APPROVED	DATE		
LAST ECR 13116 23	CHECKED	ENGR. DATE 24-Jun-05	ATTACHMENTS

Fairmont Tamper
2401 Edward Rood Rd. P.O. Box 20
Lake-View, Columbia, South Carolina 29171-0020
(803) 822-9160

G0223WAK

THIS DOCUMENT CONTAINS PROPRIETARY INFORMATION AND SUCH INFORMATION MAY NOT BE DISCLOSED TO OTHERS FOR ANY PURPOSE OR USED FOR MANUFACTURING PURPOSES WITHOUT THE WRITTEN PERMISSION OF FAIRMONT TAMPER

ENG DWG NO	DESCRIPTION (24)	DRAWN	DATE	CHECKED	DATE	APP	DATE	APP	DATE
0-3523010-0-09	TRANSMISSION, 36000 SER.	BL	3-12-96	JA	3-19-96	CS	3-19-96	AML	3-19-96

ITEM NO	PART NO	SPECIFICATIONS	APP VENDOR(S)	DER	DR	APP	CK	MF
	0-3523010-0-09	SEE BELOW	CLARK-HURTH, PART NO. 4263007		BL			

MODEL NO. : 14.5 HR36425(-2)

SPECIFICATION NO. : 97122300

- 4-SPEED LONGDROP W/ELECTRIC SHIFT 24V
- MOUNTS TO SAE #1 FLYWHEEL HOUSING
- BI-DIRECTIONAL PTO (RATIO 1:1) 6C YOKE (MECH. DISCONNECT)
- OUTPUT: MECH. 8.5C YOKE (FRONT AND REAR)
- MECHANICAL INTERNAL TOWING DISCONNECT
- 16 INCH FLEX PLATE
- OPTIONAL SPEEDOMETER DRIVE
- 31 GPM CHARGE PUMP
- SPEED SENSOR PROVISION
- OPTIONAL DIPSTICK

DRY WEIGHT: 1465 LB

GEAR RATIOS (FORWARD & REVERSE)

1ST	4.04:1
2ND	2.02:1
3RD	1.15:1
4TH	0.65:1

PUMP DRIVE:

SAE C W/DISCONNECTS:

PAD A: 246303

PAD C: 235476

RATIO: 1:1

DIRECTION: ENGINE WISE ROTATION (CCW FACING OUTPUT)

FOR SPARE PARTS SEE DWG 4009542

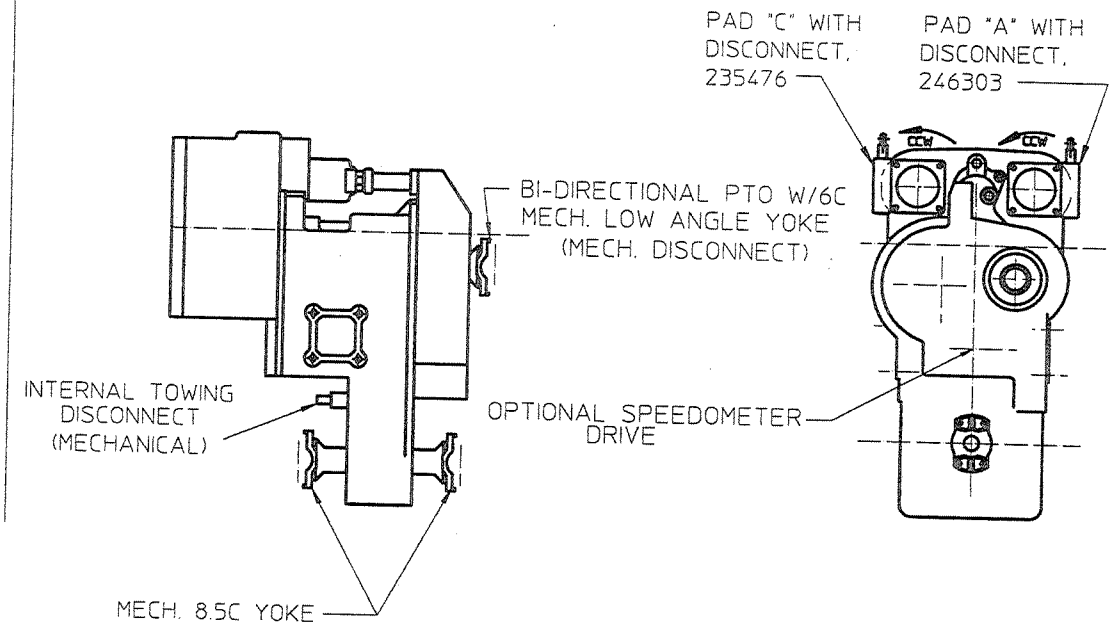

NO	DER	DESCRIPTION	DR	APP	CK	MF
G	13116.26	ADDED SPARE PARTS DWG NOTE.	PJG	JOC	JOC	
F	13116 .13	CLARK HURTH P/N WAS 4261173 & MODEL NO. WAS 14.5 HR36425(-1)	PJG	JOC	JOC	
5	8678 .94	MODEL# WAS 14.5 HR34425(-1); ADDED OPTIONAL DIPSTICK, PART# WAS 292084, SPEC# WAS 960016	B.L.	HAP	HW	
4	8095.13	ADDED REAR 8.5C OUTPUT YOKE TO SPECS	HAP	AML	JA	
3	8095.3	MODEL WAS 14.5HR34422-1, 1ST RATIO WAS 4.42:1	B.L.	AML	JA	
2	8095.2	ADDED VENDOR PART NUMBER AND PUMP DISCONNECTS; MODEL WAS 14.5HR34422	A.L.	CS	JA	
1	8095.1	RELEASED			JA	

REVISIONS

IMPLIED TOLERANCES

ALL DIMENSIONS ARE IN INCHES-TOLERANCE UNLESS OTHERWISE SPECIFIED

NOMINAL SIZE RANGE		PLUS OR MINUS			NOMINAL SIZE RANGE		PLUS OR MINUS		
OVER	TO	FRACTION	2 PLACE DECIMAL	3 PLACE DECIMAL	OVER	TO	FRACTION	2 PLACE DECIMAL	3 PLACE DECIMAL
-	1	1/64	.01	.003	6	24	3/64	.03	.008
1	6	1/32	.02	.005	24	-	1/16	.05	.010

ANGULAR DIMENSIONS PLUS OR MINUS 1 DEGREE

√ ALL MACHINED SURFACES TO HAVE A SURFACE FINISH OF 125 MICROINCHES UNLESS OTHERWISE SPECIFIED

THIS DOCUMENT CONTAINS PROPRIETARY INFORMATION AND SUCH INFORMATION MAY NOT BE DISCLOSED TO OTHERS FOR ANY PURPOSE OR USED FOR MANUFACTURING PURPOSES WITHOUT THE WRITTEN PERMISSION OF FAIRMONT TAMPER

3rd ANGLE PROJECTION

DO NOT SCALE

Fairmont Tamper™
2401 Edmund Road-Box 20
Cayce-West Columbia,
South Carolina 29171-0020
(803) 822-9160

SHEET	CONT ON	LAST ECR	CHECKED	DATE	ENG DWG NO
1	-	13116 .26	dvan	28-Jun-05	0-3523010-0-09

PARTS LIST

ITEM NO	PART NUMBER	DESCRIPTION	QUANTITY
1	G3258Y01	HYD TRANSMISSON, FUNK	1
2	0-2304226-0-01	TRANSMISSION BRKT	1
3	0-2304226-0-02	TRANSMISSION BRKT	1
4	0-2304227-0-01	TRANSMISSION BRKT	1
5	G3281XAA	SHIFTER BRKT WLDT	1
6	0-3119003-0-03	LIMIT SWITCH, HD PLUNGER	1
7	A0050073	10-32 X 2 PL RD HD MS	2
8	0-3011001-0-82	10-32 ESNA NUT	2
9	A0059025	10 MEDIUM PLTD FL WASH	2
10	0-3305018-0-02	3/8 Ø HYD TUBING (FT)	2
11	0-3652048-0-04	ROD END (W/ STUD)	1
12	A0056007	7/16-20 HEX JAM NUT	1
13	A0059004	7/16 FLAT WASHER	1
14	L410612	7/16-20 ESNA NUT	1
15	A0036227	3/4-10 X 4 1/2 HHCS	1
16	L41764	3/4-10 ESNA NUT	1
17	0-3652049-0-04	ROD END (FEMALE)	1
18	L420853	1/8 MP / 1/4 JIC 90°	2
19	0-3470000-0-01	AIR CYLINDER	1
20	4009121	XMSN MTG FRAME	1
21	0-3304121-0-05	3/8 SLEEVE	4
22	A0036178	5/8-11 X 2 HHCS	4
23	L40006	5/8-11 ESNA NUT	12
24	A0059007	5/8 MEDIUM FLAT WASHER	4
25	A0036164	9/16-12 X 1 1/4 HHCS	6
26	A0061014	9/16 MEDIUM LOCK WASHER	8
27	A0036179	5/8-11 X 2 1/4 HHCS	8
28	A0061010	3/8 MEDIUM LOCK WASHER	4
29	A0036166	9/16-12 X 1 3/4 HHCS	2
30	L422725	9/16-12 ESNA NUT	2
31	A0036170	9/16-12 X 3 HHCS	2
32	A0055018	9/16-12 HEX NUT	2
33	0-3521003-0-43	85WB DRIVESHAFT ASSY	1

ASSEMBLY IDENTIFIER

IRAQ MK VI

ASSEMBLY DESCRIPTION

ER
DR
CK
APP
MF

REVISIONS

NO	ER	DESCRIPTION	DR	CK	APP	MF
A	13116.6	RELEASED				
C		NO CHANGE				

SHEET 1 | CONT ON 2 | LAST ECR 13094 24 | CHECKED dvan DATE 3-May-05 | DWG NO G0187WAE

DWG NO G0187WAE | SHEET 1 | CONT ON 2 | DESCRIPTION (24) REAR XMSN INSTL | DRAWN A. OUZTS | DATE 29 APR 05 | CHECKED AML | DATE 05 MAY 05 | APP AML | DATE 05 MAY 05 | APP | DATE

Fairmont Tamper™
2401 Edmund Road-Box 20
Cayce-West Columbia,
South Carolina 29171-0020
(803) 822-9160

PARTS LIST

ITEM NO	PART NUMBER	DESCRIPTION	QUANTITY
34	C8649Y02	HYDRAULIC MOTOR	1
35	0-3391000-0-58	"O" RING 6 1/4 OD	1
36	C9095WAE	TRACTION VALVE ASSY	1
37	A0036069	3/8-16 X 2 1/4 HHCS	4
38	A0055012	3/8-16 HEX NUT	4
39	4-3016012-0-08	3/4-10 X 2 HHCS GR8	4
40	A0061024	3/4 HEAVY LOCK WASHER	4
41	0-3304194-0-06	1 1/4 SP FLG -16 JIC 90°	2
42	L420149	ADAPTER 5/8 O-RG-1/2JIC	1
43	0-3336024-0-07	SANDWICH CHECK VLV (D03)	1
44	F014197	-20 ORB -16 JIC STR	4
~~45~~	~~0-3304132-0-10~~	~~1 1/4 - 1" SWL REDUCER~~	~~1~~
46	D9692X01	END YOKE (85WB)	1
47	0-3361006-0-01	SUBPLATE, NFPA D03 STD.	1
48	C6277X01	TRANSMISSION BRACKET	1
49	L41127	10-24 ESNA NUT	4
50	L423028	O RING BOSS/37°FLARE	2
51	L420151	FTG 1/20RB-3/8JIC ST	1
52	C0993Y03	D03 VALVE SOL 4/3 24 VDC	1
53	A0041024	10-24 X 3 1/2SOCHCS GR8	4
54	G5787Y02	NPT (M) X ORB ADAPTER	1
55	L425696	-6 ORB -8 JIC STR	1
~~56~~	~~L41079~~	~~1/4 MNPT-MNPT ADAPT.~~	~~2~~
57	L411379	1/4 MPT / 3/8 JIC STR	1
58	F024761	RESTRICTOR	1
59	L41208	3PSI CHECK VALVE -4	1
60	0-3304057-0-07	SW R TEE,-4JIC/-4JIC SW	2
61	A0038066	1/2-20 X 2 1/2 HHCS GR8	16
62	A0061013	1/2 MEDIUM LOCK WASHER	16
63	L425923	FITTING (1"SW RUN TEE)	2
64	0-3304132-0-07	1"-3/8" JIC SWL REDUCER	2
65	0-3304120-0-05	3/8 TUBE NUT	4
66	0-3304193-0-03	SPLIT FLANGE MTG KIT	2

ASSEMBLY IDENTIFIER

IRAQ MK VI

ASSEMBLY DESCRIPTION

ER	
DR	
CK	
APP	
MF	

REVISIONS

NO	ER	DESCRIPTION	DR	CK	APP	MF
A	131166	RELEASED				
B	100158	IT-44 WAS 0-3304057-0-12 & QTY WAS 1, IT-54 WAS L423221, IT-55 WAS L425403, IT-57 WAS 0-3304013-0-40, IT-58 WAS A0758Y13, QTY IT-63 WAS 1, DEL ITS 45 & 56.	PJG	JOC	JOC	
C		NO CHANGE				

SHEET 2 CONT ON 3 LAST ECR 13094 24 CHECKED dvan DATE 3-May-05 DWG NO G0187WAE

DWG NO G0187WAE

SHEET 2 CONT ON 3

DESCRIPTION (24) REAR XMSN INSTL

DRAWN A. OUZTS DATE 29 APR 05

CHECKED AML DATE 05 MAY 05

APP AML DATE 05 MAY 05

APP

DATE

Fairmont Tamper™
2401 Edmund Road-Box 20
Cayce-West Columbia,
South Carolina 29171-0020
(803) 822-9160

PARTS LIST

ITEM NO	PART NUMBER	DESCRIPTION	QUANTITY
67	0-3305018-0-06	1 Ø HYD TUBING (FT)	6
68	0-3304121-0-10	1" SLEEVE	4
69	0-3304120-0-09	1" TUBE NUT	4
70	4011271	ROLLER	1

ASSEMBLY IDENTIFIER

IRAQ MK VI

DWG NO G0187WAE

SHEET 3

CONT ON -

DESCRIPTION (24) REAR XMSN INSTL

DRAWN PJG DATE 02-02-06

CHECKED JOC DATE 02-02-06

APP JOC DATE 02-02-06

APP DATE

SHEET 3 CONT ON - LAST ECR 13094 24

CHECKED DATE

DWG NO G0187WAE

REVISIONS

NO	ER	DESCRIPTION	DR	CK	APP	MF
B	100158	RELEASE PL3	PJG			
C	100370	ADDED IT-70.	PJG	JOC	JOC	

ASSEMBLY DESCRIPTION

ER
DR
CK
APP
MF

Fairmont Tamper™
2401 Edmund Road-Box 20
Cayce-West Columbia,
South Carolina 29171-0020
(803) 822-9160

ENG.DWG.NO.
G0187WAE

REVISIONS							
NO	ER	DESCRIPTION	ZONE	DR	CK	APP	MF
A	13116.6	NEW RELEASE					
B	100158	REVISED VIEW "B". DEL ITS 45 & 56. ADDED ITS 67, 68, 69.		PJG	JOC	JOC	
C	100370	ADDED IT-70.		PJG	JOC	JOC	

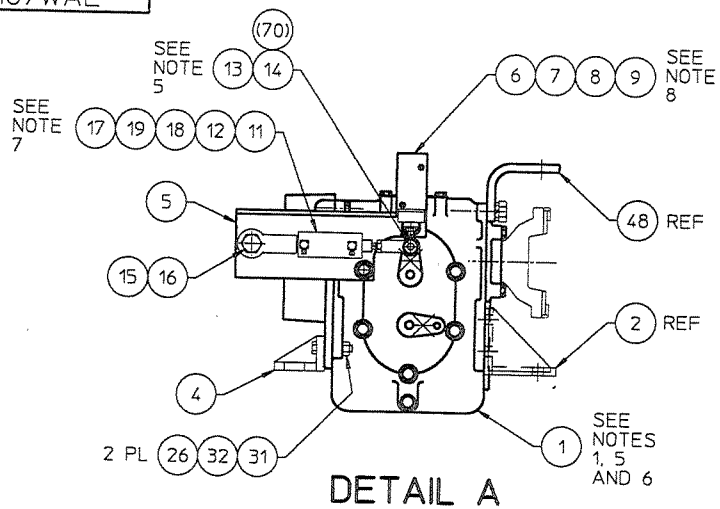

DETAIL A

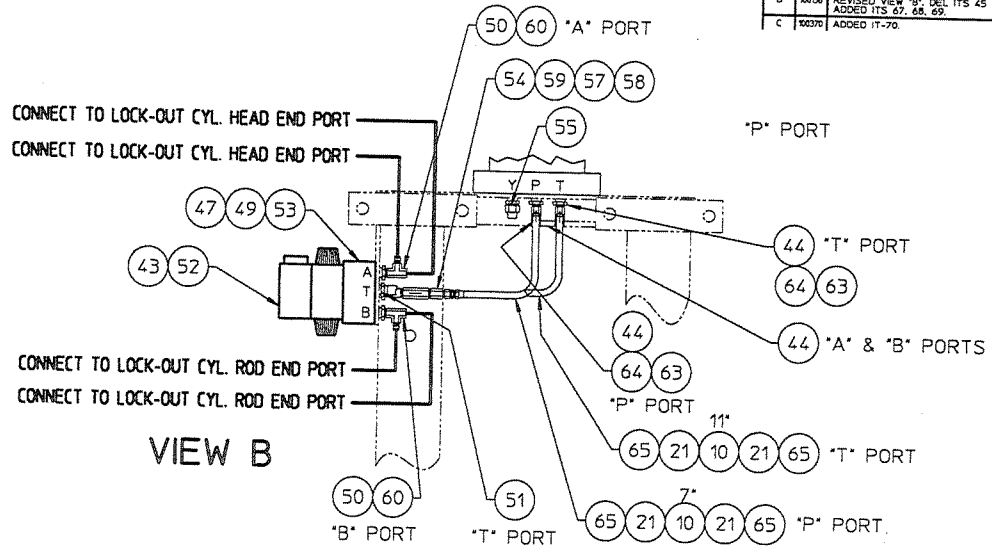

VIEW B

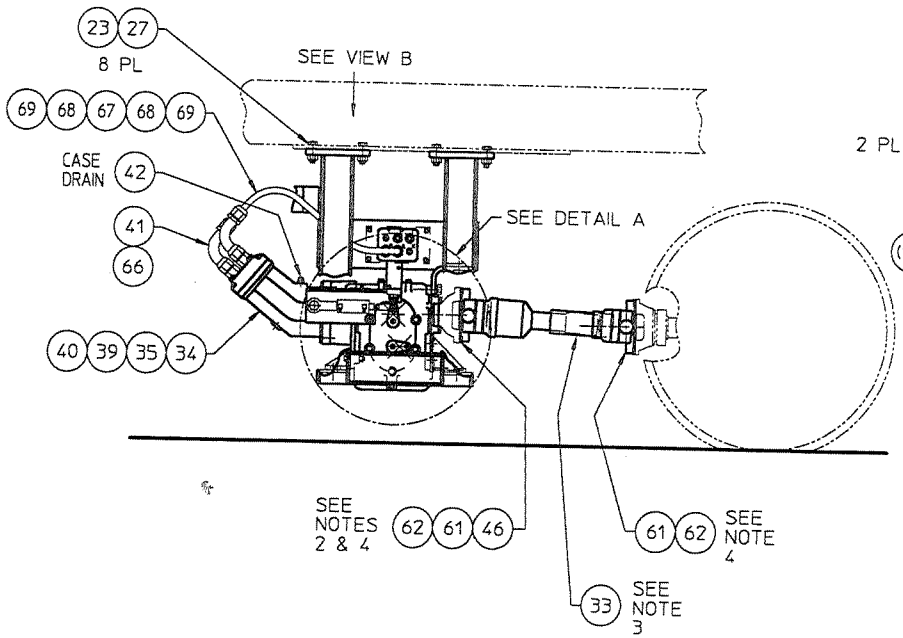

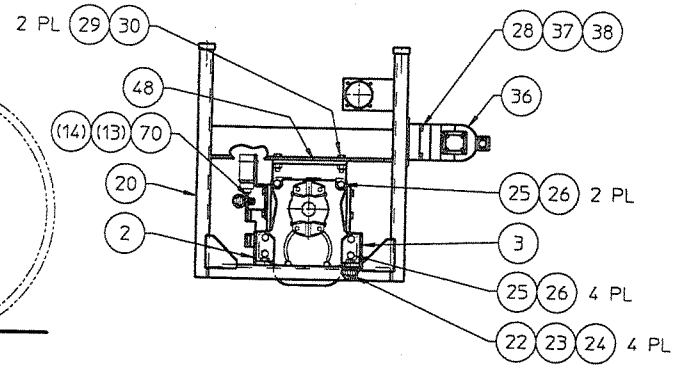

NOTES:
1. DISCARD EXISTING SHIFTING MECHANISM.
2. REPLACE OUTPUT FLANGE WITH ITEM 46 USING THE EXISTING O-RING SEAL AND HARDWARE.
3. INSTALL DRIVESHAFT (ITEM 33) AS SHOWN TO INSURE PROPER CLEARANCE. ALL GREASE FITTINGS ARE TO BE POSITIONED FOR EASY ACCESIBILTY.
4. APPLY LOCTITE 242 TO BOLTS (ITEM 61) AND TORQUE TO 120 FT-LBS.
5. DRILL HOLE IN UPPER SHIFTER ARM TO Ø15/32.
6. RE-POSITION UPPER SHIFTER ARM TO BE VERTICAL, AS SHOWN, WHEN IN NEUTRAL.
7. ASSEMBLE AIR CYLINDER SO THAT IT IS RETRACTED WHEN UPPER SHIFTER ARM IS VERTICAL (IN NEUTRAL). APPLYING AIR IN WORK MODE SHOULD EXTEND THE CYLINDER, SHIFTING IT TO FIRST GEAR.
8. ADJUST LIMIT SWITCH TO BE ENGAGED WHEN TRANSMISSION IS IN NEUTRAL AND TO BE DISENGAGED WHEN TRANSMISSION IS IN FIRST GEAR.

PLOT SCALE - 1/8

IMPLIED TOLERANCES
ALL DIMENSIONS ARE IN INCHES-TOLERANCE UNLESS OTHERWISE SPECIFIED

NOMINAL SIZE RANGE		PLUS OR MINUS			NOMINAL SIZE RANGE		PLUS OR MINUS		
OVER	TO	FRACTION	2 PLACE DECIMAL	3 PLACE DECIMAL	OVER	TO	FRACTION	2 PLACE DECIMAL	3 PLACE DECIMAL
-	1	1/64	.01	.003	6	24	3/64	.03	.008
1	6	1/32	.02	.005	24	-	1/16	.05	.010

ANGULAR DIMENSIONS PLUS OR MINUS 1 DEGREE

ALL MACHINED SURFACES TO HAVE A SURFACE FINISH OF 125 MICROINCHES UNLESS OTHERWISE SPECIFIED.

WELDING SPECIFICATION

UNLESS OTHERWISE SPECIFIED ALL WELDS SHOULD ADHERE TO FAIRMONT TAMPER WELDING SPECIFICATION NO. 101

WEIGHT

DO NOT SCALE

NOT ABLE PROJECTION

SHEET 1 CONT. - OF -

FIG NO.	ITEM NO.	PART NUMBER	DESCRIPTION AND MATERIAL SIZE (REF.ONLY)	QTY

DESCRIPTION (2)
REAR XMSN INSTL

DRAWN A.DUZTS	DATE 29 APR 05	MACHINE TYPE MARK VI
CHECKED AML	DATE 05 MAY 05	
APPROVED AML	DATE 05 MAY 05	Fairmont Tamper 2401 Edmund Road-Box 30 Cherry Hill, Columbia South Carolina 29201-0030 (803) 822-9140
LAST ECR 13094 .24	CHECKED DWG. REV. 3-May-05	DRAWING G0187WAE

THIS DOCUMENT CONTAINS PROPRIETARY INFORMATION AND SUCH INFORMATION MAY NOT BE DISCLOSED TO OTHERS FOR ANY PURPOSE OR USED FOR MANUFACTURING PURPOSES WITHOUT THE WRITTEN PERMISSION OF FAIRMONT TAMPER

PARTS LIST

ITEM NO	PART NUMBER	DESCRIPTION	ASSEMBLY IDENTIFIER AA QUANTITY
1	0-3521003-0-42	85WB DRIVESHAFT ASSY	1
2	L425527	1/2-20 X 1 1/2 HHCS GR8	16
3	A0061013	1/2 MEDIUM LOCK WASHER	16
4	G1655YAA	FRONT WLDT	1
5	G1610XAA	MOUNT WLDT	1
6	G1606Y01	HOOP	2
7	G1613Y01	CAP PLATE	2
8	A0036124	1/2-13 X 1 3/4 HHCS	10
9	L40767	1/2-13 ESNA NUT	12
10	A0036126	1/2-13 X 2 1/4 HHCS	2

DWG NO B6692XAD

SHEET 1 CONT ON –

DESCRIPTION (24) DRIVESHAFT INSTL

DRAWN PJG

DATE 12-2-96

CHECKED

DATE

APP

DATE

APP

DATE

REVISIONS

NO	ER	DESCRIPTION	DR	CK	APP	MF
2	8095	SEPARATED P/L FROM DWG. ADDED ITEMS 4-10.	PJG			

SHEET 1 CONT ON –

LAST ECR 8095. 153

CHECKED IGQ

DATE 12-Feb-97

DWG NO B6692XAD

ASSEMBLY DESCRIPTION

ER

DR

CK

APP

MF

Fairmont Tamper™
2401 Edmund Road-Box 20
Cayce-West Columbia,
South Carolina 29171-0020
(803) 822-9160

B6692XAD

REVISIONS							
NO	ER	DESCRIPTION	ZONE	DR	CK	APP	MF
1	8095.26	NEW RELEASE		HAP			
2	8095	SEPARATED P/L FROM DWG.		PJG			

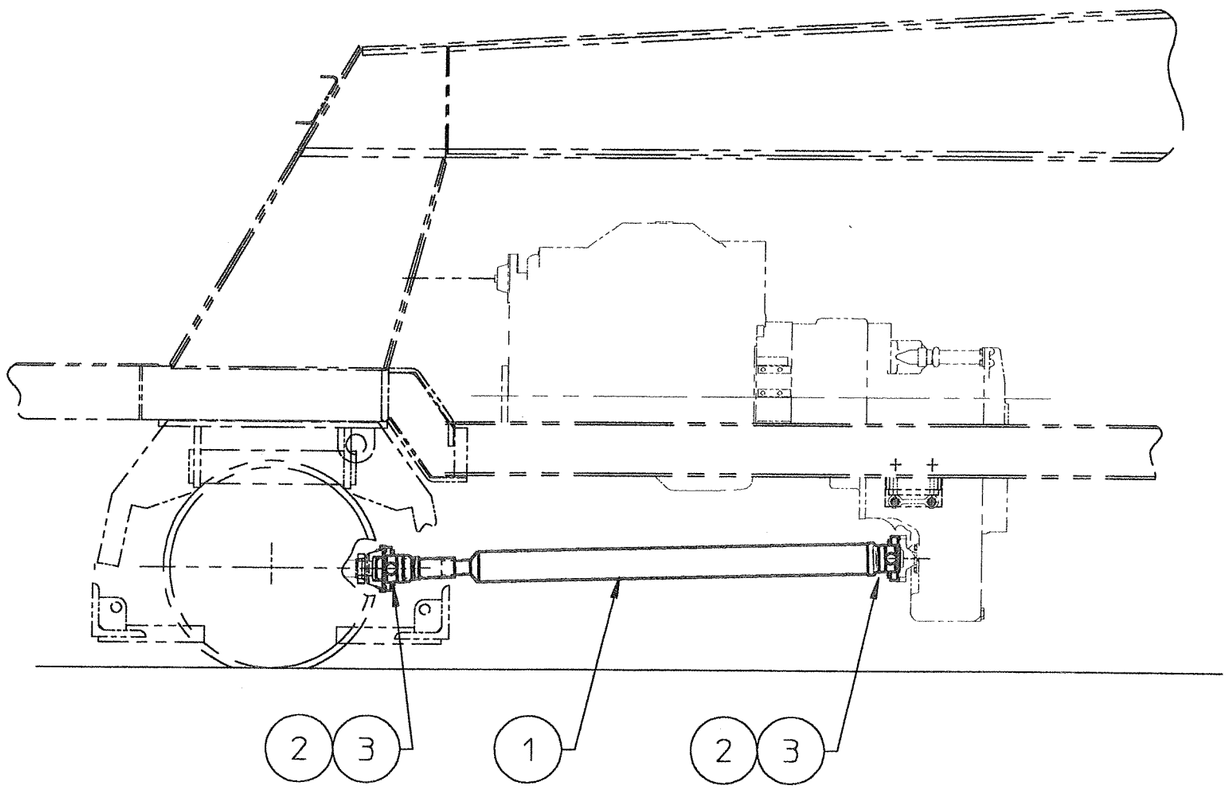

NOTES:
1) INSTALL DRIVE SHAFT (ITEM 1) WITH ENDS AS SHOWN TO ENSURE ADEQUATE CLEARANCE. ALL GREASE FITTINGS ARE TO BE POSITIONED SO THEY ARE EASILY ACCESSIBLE.
2) APPLY LOCTITE 242 TO BOLTS (ITEM 2) AND TIGHTEN TO 120 FT-LBS OF TORQUE.
3) GREASE ALL FITTINGS ONCE COMPLETED.

SEE SEPARATE PARTS LIST

FIG NO.	ITEM NO.	PART NUMBER	DESCRIPTION AND MATERIAL SIZE (REF.ONLY)	QTY

PLOT SCALE = 1/16

IMPLIED TOLERANCES
ALL DIMENSIONS ARE IN INCHES-TOLERANCE UNLESS OTHERWISE SPECIFIED

NOMINAL SIZE RANGE		PLUS OR MINUS			NOMINAL SIZE RANGE		PLUS OR MINUS		
OVER	TO	FRACTION	2 PLACE DECIMAL	3 PLACE DECIMAL	OVER	TO	FRACTION	2 PLACE DECIMAL	3 PLACE DECIMAL
-	1	1/64	.01	.003	6	24	3/64	.03	.008
1	6	1/32	.02	.005	24	-	1/16	.05	.010

ANGULAR DIMENSIONS PLUS OR MINUS 1 DEGREE

√ ALL MACHINED SURFACES TO HAVE A SURFACE FINISH OF 125 MICROINCHES UNLESS OTHERWISE SPECIFIED.

WELDING SPECIFICATION

UNLESS OTHERWISE SPECIFIED ALL WELDS SHOULD ADHERE TO FAIRMONT TAMPER WELDING SPECIFICATION NO. 101

WEIGHT lbs.

3rd ANGLE PROJECTION

DO NOT SCALE

SHEET 1 CONT. ON 2

DESCRIPTION (24) DRIVESHAFT INSTL

DRAWN HAP	DATE 5-29-96	MACHINE TYPE MARK VI	
CHECKED JA	DATE 7-2-96		
APP-ENG A.LINDSEY	DATE 7-2-96		
APP-MFG	DATE		
LAST ECR. 8095.153	CHECKED jaa	ENG.DWG.NO. B6692XAD	
	DATE 12-Feb-97		

Fairmont Tamper™ 2401 Edmund Road-Box 20 Cayce-West Columbia, South Carolina 29171-0020 (803) 822-9160

THIS DOCUMENT CONTAINS PROPRIETARY INFORMATION AND SUCH INFORMATION MAY NOT BE DISCLOSED TO OTHERS FOR ANY PURPOSE OR USED FOR MANUFACTURING PURPOSES WITHOUT THE WRITTEN PERMISSION OF FAIRMONT TAMPER.

B6692XAD

REVISIONS							
NO	ER	DESCRIPTION	ZONE	DR	CK	APP	MF
2	8095	ADDED SHEET 2		PJG			

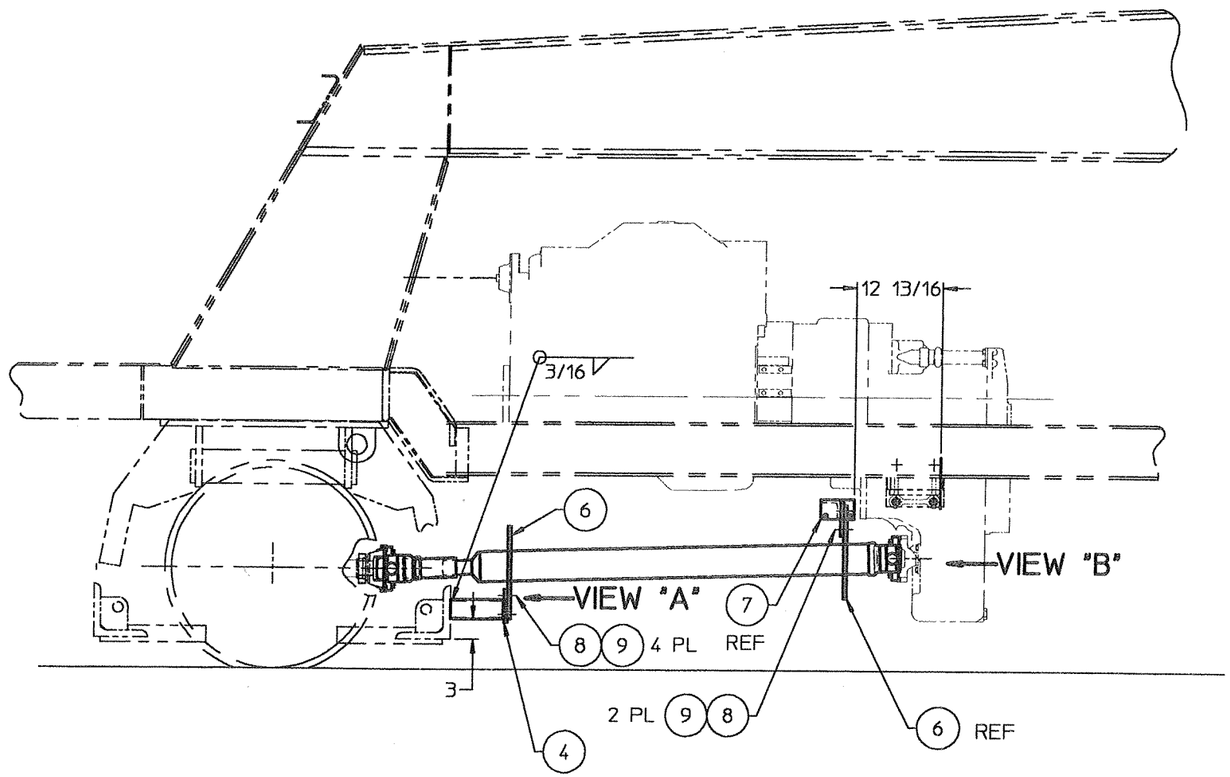

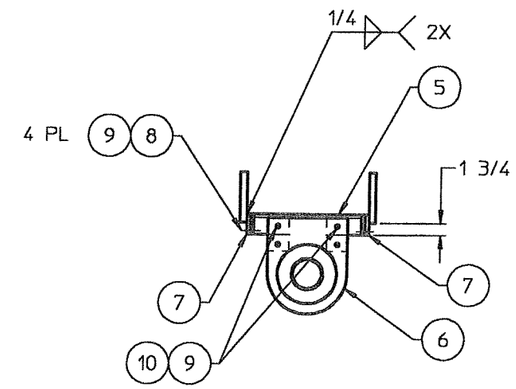

VIEW "B"

SEE SEPARATE PARTS LIST

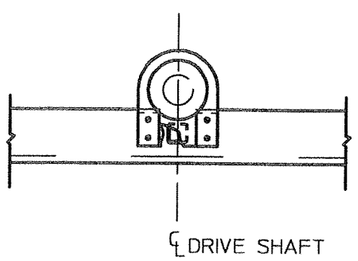

VIEW "A"

FIG NO.	ITEM NO.	PART NUMBER	DESCRIPTION AND MATERIAL SIZE (REF.ONLY)	QTY

IMPLIED TOLERANCES
ALL DIMENSIONS ARE IN INCHES-TOLERANCE UNLESS OTHERWISE SPECIFIED

NOMINAL SIZE RANGE		PLUS OR MINUS			NOMINAL SIZE RANGE		PLUS OR MINUS		
OVER	TO	FRACTION	2 PLACE DECIMAL	3 PLACE DECIMAL	OVER	TO	FRACTION	2 PLACE DECIMAL	3 PLACE DECIMAL
-	1	1/64	.01	.003	6	24	3/64	.03	.008
1	6	1/32	.02	.005	24	-	1/16	.05	.010

ANGULAR DIMENSIONS PLUS OR MINUS 1 DEGREE

√ ALL MACHINED SURFACES TO HAVE A SURFACE FINISH OF 125 MICROINCHES UNLESS OTHERWISE SPECIFIED.

WELDING SPECIFICATION

UNLESS OTHERWISE SPECIFIED ALL WELDS SHOULD ADHERE TO FAIRMONT TAMPER WELDING SPECIFICATION NO. 101

WEIGHT lbs.

3rd ANGLE PROJECTION

DO NOT SCALE

SHEET 2 CONT. ON –

DESCRIPTION (24 DRIVESHAFT INSTL

DRAWN PJG	DATE 12-2-96	MACHINE TYPE MARK VI
CHECKED	DATE	
APP-ENG	DATE	
APP-MFG	DATE	
LAST ECR. 8095. 153	CHECKED jgg DATE 12-Feb-97	ENG.DWG.NO. B6692XAD

Fairmont Tamper™
2401 Edmund Road-Box 20
Cayce-West Columbia,
South Carolina 29171-0020
(803) 822-9160

THIS DOCUMENT CONTAINS PROPRIETARY INFORMATION AND SUCH INFORMATION MAY NOT BE DISCLOSED TO OTHERS FOR ANY PURPOSE OR USED FOR MANUFACTURING PURPOSES WITHOUT THE WRITTEN PERMISSION OF FAIRMONT TAMPER.

ENG DWG NO	DESCRIPTION (24)	DRAWN	DATE	CHECKED	DATE	APP	DATE	APP	DATE
G3258Y01	HYD TRANSMISSON, FUNK	HAP	JUNE 2/97						

ITEM NO	PART NO	SPECIFICATIONS	APP VENDOR(S)	DER	DR	APP	CK	MF
	G3258Y01	SEE BELOW	FUNK MANUFACTURING					

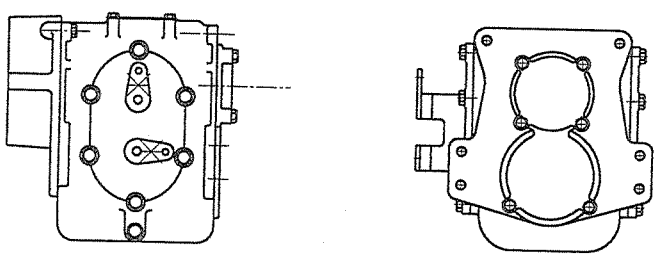

FOR SPARE PARTS
SEE A2662XAJ

SPECIFICATIONS:

* 4 SPEED, HYDRAULIC DRIVE
* BASIC MODEL 12700
* INPUT: SAE "D" W/ Ø 1 3/4, 13 TOOTH, 8/16 DP SPLINE
* GEAR RATIOS:

LO	6.27:1
2ND	3.12:1
3RD	1.75:1
HI	1.00:1

* OIL CAPACITY: 4 QT
* OIL TYPE: EP 90
* OUTPUT FLANGE: COMPANION FLANGE
* NET WT: 194 LBS
* NOT CAPABLE OF SIDE LOAD

PLOT SCALE = 1/8

NO	DER	DESCRIPTION	DR	APP	CK	MF
1		NEW RELEASE	HAP			

REVISIONS

IMPLIED TOLERANCES
ALL DIMENSIONS ARE IN INCHES-TOLERANCE UNLESS OTHERWISE SPECIFIED

NOMINAL SIZE RANGE		PLUS OR MINUS			NOMINAL SIZE RANGE		PLUS OR MINUS		
OVER	TO	FRACTION	2 PLACE DECIMAL	3 PLACE DECIMAL	OVER	TO	FRACTION	2 PLACE DECIMAL	3 PLACE DECIMAL
-	1	1/64	.01	.003	6	24	3/64	.03	.008
1	6	1/32	.02	.005	24	-	1/16	.05	.010

ANGULAR DIMENSIONS PLUS OR MINUS 1 DEGREE

ALL MACHINED SURFACES TO HAVE A SURFACE FINISH OF 125 MICROINCHES UNLESS OTHERWISE SPECIFIED

THIS DOCUMENT CONTAINS PROPRIETARY INFORMATION AND SUCH INFORMATION MAY NOT BE DISCLOSED TO OTHERS FOR ANY PURPOSE OR USED FOR MANUFACTURING PURPOSES WITHOUT THE WRITTEN PERMISSION OF FAIRMONT TAMPER.

3rd ANGLE PROJECTION

DO NOT SCALE

Fairmont Tamper™
2401 Edmund Road-Box 20
Cayce-West Columbia,
South Carolina 29171-0020
(803) 822-9160

SHEET	CONT ON	LAST ECR	CHECKED	ENG DWG NO
1	–	10103 .1	hwl DATE 23-Jul-97	G3258Y01

PARTS LIST

ITEM NO	PART NUMBER	LEG	DESCRIPTION (30)	AA	AB	AC	AD	AE	AF	AG	AH	AJ
				QUANTITY								
1	A2660P01		HSG TRANS	1	1							
2	A2660P03		PLUG, DRAIN MAGN.	1	1							
3	A2660P04		PLUG OIL LEVEL	1	1							
4	L422243		BEARING, FRONT	1	1							
5	A2660P05		COUNTER SHAFT LO GEAR	1	1							
6	L422244		BEARING, REAR F41271R	1	1							
7	L422235		SNAP RING F39010-162 15100-162	2	2							
8	A2660P06		GEAR, CNTR SHF 2ND	1	1							
9	A2660P07		GEAR, CNTR SHF DR	1	1							
10	A2660P08		SHAFT, MAIN	1	1							
11	A2660P09		GEAR MAIN SHF 2ND	1	1							
12	A2660P10		GEAR BORE BEARING	39	39							
13	A2660P11		GEAR MAIN SHF LOW	1	1							
14	A2660P12		WASHER LOW GEAR	1	1							
15	L422239		BEARING OUTPUT F40305R	1	1							
16	A2660P13		BEARING PILOT	1	1							
17	A2660P14		COVER REAR	1	1							
18	A2660P15		SEAL OIL REAR	1	1							
19	A2660P16		GASKET REAR CVR	1	1							
20	A2660P17		WASHER	6	6	6					6	
21	L422240		DRUM BRAKE 45681R	1								
22	L422241		FLANGE BRAKE 23381	1	1							
23	L422257		FLANGE BOLT BRAKE 46204 46204	1								
24	A2660P18		FLANGE GASKET	1	1							
25	L422258		FLANGE WASHER BRK	1	1							
26	L422259		FLANGE O-RING F37022-118	1	1							
27	0-3620014-0-05	L422260	NUT FLANGE BRAKE	1	1							
28	A2660P19		SHIFT CAP ASSY	1								
29	A2660P20		CAP	1	1							
30	L422261		OIL SEAL F65022	1	1							
31	A2660P21		INSIDE LEVER FORK SHIFTER	1	1							
32	A2660P22		SHAFT LEVER	1	1							
33	A2660P23		FORK ASSY	1	1							

ASSEMBLY IDENTIFIER

	AA	AB	AC	AD	AE	AF	AG	AH	AJ
	SAE "D" INPUT 4 SPEED HYD.	SAE "D" INPUT 2 SPEED HYD.	SPEC 3241	SPEC 7216 W/ BRAKE	SPEC 2616	SPEC 2828	SPEC 6431 W/BRAKE	SPEC 6724	
	HMD-12700	G32SBYO1	H5117YA	B96IXO1	HMD1200	HMB1200	0-3523021-0-02	HMD1225	HMD2225
	G32SBYO1	H5117YA	B96IXO1	HMD1200	0-3523021-0-01	27L71TX	HMD1200A	0-3523021-0-01	0-3523021-0-01
	HMD-12700	HMD1200	0-3523021-0-01	0-3523021-0-01	HMD334HHC	HMD1200B	HMD334NHD	HMD334NHD	HMD2225DB
				27L71TX	27L71TX				
				7-762540-001	7-762540-001				7-764921X
				5867	5867				
				7-762540-002					

ASSEMBLY DESCRIPTION

	AA	AB	AC	AD	AE	AF	AG	AH	AJ
DER	FR 1036					FR 1036	5862 165		
DR								6-3-77 HAP	
CK									
APP									
MF									

REVISIONS

NO	DER	DESCRIPTION	DR	CK	APP	MF
1	FR1036	NEW REL AA, AB, AC, AD, AE, AF, AG				
2	—	NO CHG				
3	FR1036	IT.12 WAS L422238 4/24/84				
8	—	NO CHANGE				
9	67437	ADDED IT-16 TO 'AB'				
10		NO CHG				

SCANNED

REVISION ____ OF THIS DRAWING HAS BEEN SCANNED INTO THE CADICAM DATA BASE

INITIALS

DATE

ENG DWG NO: A2662X

SHEET 1 CONT ON 2

ENG DWG NO: A2662X

SHEET 1 CONT ON 2 DESCRIPTION (30): TRANSMISSION REPAIR PARTS (FUNK)

6 PAGES

DRAWN: [illegible] DATE: 2/2/84

CHECKED: DATE:

APP: [illegible] DATE: FEB 9/84

APP: DATE:

Tamper

Div. Canron Corp
2401 Edmund Road
West Columbia
South Carolina 29169
Tel: (803) 794 9160
Telex 573423

ENGS -7 38562

PARTS LIST

ITEM NO	PART NUMBER	LEG	DESCRIPTION (30)		AA	AB	AC	AD	AE	AF	AG	AH	AJ		
					QUANTITY										
34	A2660P24		DETENT SPRING		0	0	2	2	2	2			2		
35	A2660P25		BALL DETENT		1	1	3	3	2	2			3		
36	A2660P26		PULL, EXPANSION		1	1									
37	A2660P27		LEVER, REMOTE		1	1									
38	A2660P28		GASKET CAP		1										
39	A2660P29	WS3278-2	BRACKET BRAKE LEVER		1										
40	A2660P30	WS3278-3	LEVER BRAKE		1										
41	A2660P31	WS3278-5	YOKE END		1										
42	A2660P32	WS3278-6	CLEVIS PIN		1										
43	0-353 0000-0-00		ANCHOR BRAKE BAND		1	1									
44	0-353 0001-0-00		BRACKET BRAKE GUIDE		1										
45	L422262		BREATHER	F68200	1	1	1	1	1	1			1		
46	A2660P33	WS3278-1	BRACE ANCHOR		1										
47	L422263		BRAKE BAND ASSY	4023353	1										
48	L422242		BAND/LINING ASSY	4060276	1										
49	L422264		CLIP SPRING ANCHOR	4030263	1										
50	L422265		CAP SCREW ANCHOR	4000192	1										
51	L422266		BOLT ADJUST BRAKE	4000270	1										
52	L422267		RELEASE SPRING BRAKE	4030279	2										
53	L422268		NUT	F79106	2										
54	L422269		LOCK WASHER	F16203	1										
55	L422270		FILISTER HEAD SCREW	4006254	1										
56	L422271		NUT	F79100	2										
57	L422272		LOCK WASHER	F16200	1										
58	L422273		ROD END PIN	4000402	1										
59	L422274		BRACE LINK	4000278	1										
60	L422275		CAM LEVER	4000269	2										
61	L422276		COTTER PIN	F2600716	1										
62	L422277		ROD END PIN	4000193	1										
63	L422278		ROD END	4000272	1										
64	L422279		COTTER PIN	F2600512	1										
65	L422280		CLEVIS PIN	F2400415	1										
66	A2660P34		FRONT GASKET	4023577	1										

ASSEMBLY IDENTIFIER

AA	AB	AC	AD	AE	AF	AG	AH	AJ
SPEC 6234 Z769821X HMD 2355D8	SPEC 6431 Z769421Y HMD 2225D0	SPEC 2628 0-353 2001-0-02 Z7617 5X HMB 12200B	SPEC 2619 Z7617 5Z HMB 12200A	SPEC 5947 Z762540-0A2 HMB 5341	SPEC 7218 Z762540-0A2 0-353 2008-0-001 HMD 3241 NHC	SPEC 3241 0-353 2021-0-01 HMD 12200	MODEL 17400 R6917X01 HMD 12200	4 SPEED HYD SAE "D" INPUT 2 SPEED H5174HA G3258Y01 HMD-12700

ASSEMBLY DESCRIPTION

DER								5360 1/95			
DR								SPY	63-57 HAP		
CK											
APP									DMP		
MF											

REVISIONS

NO	DER	DESCRIPTION	DR	CK	APP	MF
1	ER1036	NEW REL				
3	—	NO CHG				
4	ER1036 8/17	CHG QTY. IT, 34 TAO AA, AB WAS 1 10/12/84	SMV			
16	—	NO CHG.				

SCANNED

REVISION HAS BEEN SCANNED INTO THE CAMCAR DATA BASE OF THIS DRAWING

INITIALS

DATE

ENG DWG NO: A2662X

SHEET 2 CONT ON 3

DESCRIPTION (30): TRANSMISSION REPAIR PARTS

DRAWN

DATE 2/2/84

CHECKED

DATE

APP DMP

DATE 2/01/84

APP

DATE

Tamper

Div Cannon Corp
2401 Edmund Road
West Columbia
South Carolina 29169
Tel (803) 794-8160
Telex 573423

ENGS -7 38562

PARTS LIST

ITEM NO	PART NUMBER	LEG	DESCRIPTION (30)	AA	AB	AC	AD	AE	AF	AG	AH	AJ
				QUANTITY								
67	A2660P35		GEARSHAFT INPUT	1	1							
68	L422236		BEARING INPUT F41216-RH	1	1							
69	L422239		SNAP RING F39010196	1	1							
70	0-3620014-0-04		ADAPTER (SEE IT-200 FOR JRM/STM)	1								
71	L423717	N53235-3	GASKET HPD 7167	1								
72	A2660P36		FLANGE COMPANION			1	1	0	2			1
73	A2660P37		O-RING			1	1	2	2			1
74	A2660P38	N53234-4	WASHER			1	1	2	2			1
75	A2660P39	N53234-5	SHIM			3	5	6	6			3
76	A2661P76		SEAL, OIL			1		2	2			1
77	A2660P41		FORK SHIFTER			1		2	2			1
78	A2660P40		OIL SEAL			2	2	2	2			2
79	0-3620014-0-01		BRAKE			1		1	1			
80	A2660P42		BELLCRANK			1		1	1			
81	A2660P43		WASHER, SPACER			1		1	1			
82	A2660P44		SHOE BRAKE			2		2	2			
83	A2660P45		SPRING RETURN			2		2	2			
84	A2660P46		DRUM ASSY			1		1	1			
85	A2660P47		WASHER CLIPPED			8		8	8			
86	0-3620014-0-02		HOUSING			1						
87	0-3620014-0-03		SHAFT INPUT			1	1					
88	L422281		O-RING F37030-250			1						
89	L422237		PILOT BEARING F52072-15									
90	A2660P48	N53234-12	BEARING			1	1					1
91	A2660P49	N53235-12	BEARING			1	1					1
92	A2660P50		HOUSING				1					
93	A2660P51	N53235-1	ADAPTER, PUMP				1					
94	L425826		ADAPTER 4HPD7185C									
95	L426137		ADAPTER 4031371A					1				
96	L425912	N53222-2 N53268-3	SEAL RING F73125258				1	1				1
97	A2660P52	N53237-1	WASHER					14	9			
98	A2660P53		CASE					1	1			
99	L425903		BEARING INPUT F40268					2	2			

	AA	AB	AC	AD	AE	AF	AG	AH	AJ
	SPEC 6429 Z764421X	SPEC 6431 Z764821Y HMD2225DG	SPEC 2628 0-3523021-0-02 HMD1270 08	SPEC 2616 Z767178X HMD1270 0A	SPEC 5967 Z762540-001 HMD334N HP	SPEC 7226 2K4SW-0-0B 0-3523020-0-01 HMD334N HC	SPEC 2261 HMD1740 0 HMD1270 0	4 SPEED HYD SAE "D" INPUT G335BY01 HS1744A 8994 1X 01 0-3523020-0-01 HMD1270 0	HMD42700

REVISIONS

NO	DER	DESCRIPTION	DR	CK	APP	MF
1	ER7046	NEW REL				
8	—	NO CHG				
9	5674,37	ADDED IT 67,68,69 TO 'AB'	AM1			
10		NO CHG.				
11	1522 6-22-94	IT. 76 WAS A2660P40 NOW A2661P76 IT. 78 WAS L421167 NOW A2660P40				
14	7933	A2662X AE IT 72 QTY WAS 2	RJM			
15	—	NO CHG.				

ASSEMBLY DESCRIPTION

DER								5760			
DR											
CK									6-3-97 HAP		
APP											
MF											

ENG DWG NO A2662X

SHEET 3 CONT ON 4

DESCRIPTION (30) TRANSMISSION REPAIR PARTS

DRAWN

DATE 2/2/84

CHECKED

DATE

APP

DATE FEB 9 1984

APP

DATE

SHEET 3 CONT ON ENG DWG NO 4 A2662X

SCANNED

REVISION HAS BEEN SCANNED INTO THE CADCAM DATA BASE OF THIS DRAWING

INITIALS

DATE

Tamper

Div Cannon Corp
2401 Edmund Road
West Columbia
South Carolina 29169
Tel (803) 794-9160
Telex 573423

ENGS-7 38562

PARTS LIST

ITEM NO	PART NUMBER	LEG	DESCRIPTION (30)	AA	AB	AC	AD	AE	AF	AG	AH	AJ
				QUANTITY								
100	A2660P54		BEARING 3TH STAGE					1	1			
101	A2660P55		BEARING					1	1			
102	A2660P56		GASKET BRG RETAIN					1	1			
103	A2660P57	N33237-2	WASHER					6	6			
104	A2660P58	N33265-4	BEARING					1	1			
105	A2660P59	N33234-2	STEEL WIRE					1				
106	A2660P60	N33234-5 83231-1	DRILLED H/A CAPSCR. (Y10-25X1 QTY 4)				2	1				
107	A2660P61		RETAINER					2	2			
108	A2660P62		GASKET					2	2			
109	A2660P63		CAP, SHIFTER					1	1			
110	A2660P64		ASM, SHFT BRKT.					2	2			
111	A2660P65		ADAPTER						1			
112	A2660P66		PLATE LOCK					2	2			
113	A2660P67		LEVER SHIFTER					2	2			
114	A2660P68		GASKET					1	1			
115	A2660P69		CAP SHIFTER					1	1			
116	A2660P70		GASKET CAPSHFT					1	1			
117	A2660P71		GASKET ADAPT DROP					1	1			
118	A2660P72		SHAFT 2ND STAGE					1	1			
119	A2660P73		COLLAR SHIFT'G					1	1			
120	A2660P74		WASHER THRUST 2STG					3	3			
121	A2660P75		GEAR, 2ND STG					1	1			
122	A2660P76		BEARING					4	4			
123	A2660P77		GEAR, 2ND STG					1	1			
124	A2660P78		WASHER THRUST 2STG					1	1			
125	A2660P79		GEAR 3TH STG					1	1			
126	A2660P80		GEAR 3TH STG					1	1			
127	A2660P81		COLLAR SHAFT					1	1			
128	A2660P82		WASHER THRUST					2	2			
129	A2660P83		GEAR OUT 53T					1	1			
130	A2660P84		SPACER OUT SHAFT					1	1			
131	A2660P85		BEARING					1	1			
132	A2660P86		WASHER THR SHAFT					1	1			

REVISIONS

NO	DER	DESCRIPTION	DR	CK	APP	MF
1	ER 1036	NEW REL				
16	—	NO CHG				

ASSEMBLY IDENTIFIER

AA	AB	AC	AD	AE	AF	AG	AH	AJ
				4 SPEED HYD HMD-12 700				
				SAE "D" INDUST G3258Y01				
				2 SPEED H5 17414				
				HMPEC 1740 B 6 9 8 1 X 01				
				SPEC 3241 H7 1 2 1 0 0 0				
				SPEC 7210 0-3523 0 2 1-0 1				
				7 7 2 5 4 0-0 0 2 HMD 334 NTC				
				SPEC 5947 0-3523 2 8 0-0 1				
				7 6 0 5 5 0-0 0 1 HMD 334 NTN				
				SPEC 2616 HMD 1270 0A				
				7 6 7 1 7 9 X				
				SPEC 2668 HMD 1270 0B				
				0-3523 2 5-0				
				SPEC 6931 0 7 9 2 3 2 0 1 H/P 2 3 2 5 0				
				7 6 9 4 2 1 X				
				SPEC 6229 HMD 223 2 3 2 5 0				
				7 6 9 4 2 1 X				

ASSEMBLY DESCRIPTION

DER												
DR												
CK												
APP												
MF												

ENG DWG NO A2662X

SHEET 4 CONT ON 5

DESCRIPTION (30) TRANSMISSION REPAIR PARTS

DRAWN

DATE 2/2/84

CHECKED

DATE

APP WHC

DATE Feb 9/84

APP

DATE

SHEET 4 CONT ON 5

ENG DWG NO A2662X

SCANNED

REVISION ___ OF THIS DRAWING HAS BEEN SCANNED INTO THE CADDIMEDATA BASE

INITIALS

DATE

Tamper

Div. Canron Corp

2401 Edmund Road
West Columbia
South Carolina 29169
Tel (803) 794-9160
Telex 573423

ENGS -7 38582

PARTS LIST

ITEM NO	PART NUMBER	LEG	DESCRIPTION (30)	AA	AB	AC	AD	AE	AF	AG	AH	AJ
				QUANTITY								
133	A2660P87		SHAFT OUTPUT					1	1			
134	A2660P88		GASKET					2	2			
135	A2660P89		SHAFT INPUT					1	1			
136	A2660P90		SPACER INPUT SHF					1	1			
137	A2660P91		OIL LVL SIGHT GA.					1	1			
138	A2660P92	NS265-2	DRIVE SCREW					2	2			
139	A2660P93	NS265-3	PLT. NAME SERIAL NO.					1	1			
140	A2660P94		BACK PLT. BRAKE ASSY					1	1			
141	L425800		SEAL RING (O'RING) F73125-250						1			
142	A2660P95		GEAR 2ND STAGE					1	1			
143	A2660P96		RET. BRG OUTPUT SHF					2	2			
144	A2660P97	NS3343-1 NS4206-1	ROLL PIN			4		2	2			
145	A2660P98	NS340-2	SAFETY WIRE (ORDER IN INCHES)			1		1	1			
146	A2660P99	NS3349-2	BRNG, REAR COUNTER SHAFT				1					
147	A2661P01	NS3349-1	BRNG, FRNT COUNTER SHAFT				1					
148	A2661P02	NS3340-3	GEAR 2ND COUNTER SHAFT				1					
149	L422238		GEAR BORE ROLLER BEARING G-528-R 4003550			34	34					
150	A2661P03	NS3349-3	BRG 2ND & 3RD GEAR C SHAFT				4					
151	A2661P04	NS340-5	COLLAR, SHIFTING				1					
152	A2661P05	NS3349-4	GEAR 3RD C SHAFT				1					
153	A2661P06	NS3349-7	WASHER, THRUST				1					
154	A2661P07	NS3349-5	BRG TRANS OUTPUT				1					
155	A2661P08	NS3349-8	O-RING, STUD SEAL				4					
156	A2661P09	NS3349-10	GASKET, REAR BRG. RET.				1					
157	A2661P10	NS3349-11	WASHER, SEALING				2					
158	A2661P11	NS3349-12	BEARING				1					
159	A2661P12	NS3349-13	SNAP RING				1					
160	A2661P13	NS3349-16	GASKET TRANS				1					
161	A2661P14	NS3349-15	WASHER, SEALING				12					
162	A2661P15	NS3349-18	GASKET, SIDE COVER CAP				2					
163	0-3013001-0-08		SNAP RING				2					
164	A0056008	NS3349-19	JAM NUT				4					
165	A2660P02		HSG TRANS	1								

ASSEMBLY DESCRIPTION

	AA	AB	AC	AD	AE	AF	AG	AH	AJ
DER							SPEC 149		
DR							Chr	6-3-97 HAP	
CK									
APP									
MF									

	AA	AB	AC	AD	AE	AF	AG	AH	AJ
	SPEC 424 Z764421X HMD2325PB	SPEC 643 Z764421Y HMD2325PB	SPEC 268 0-3523021-0-02	SPEC 269 Z76715X HMD1270DA	SPEC 2724 Z762540-001 HMD5334NHB	SPEC 7216 Z762540-002 0-3523026-0-01	SPEC 3241 HMD2334NHC 0-3523021-0-01	MODEL 17400 HMD1270	4 SPEED HYD 2 SPEED SAE "D" INPUT HMD-12700 G3158Y01 HFS17411 B969X01

REVISIONS

NO	DER	DESCRIPTION	DR	CK	APP	MF
1	ER1036	NEW REL				
2	—	NO CHG				
3	ER1036 B15	ADD'D QTY 4 TO IT.149 TAB AC 4/24/84	PLV			
16	—	NO CHANGE				

SCANNED
REVISION OF THIS DRAWING HAS BEEN SCANNED INTO THE CADCAM DATA BASE
INITIALS
DATE

ENG DWG NO: A2662X
SHEET 5
CONT ON 6
DESCRIPTION (30): TRANSMISSION REPAIR PARTS
DRAWN
DATE 3/2/84
CHECKED
DATE
APP
DATE FEB 9/84
APP
DATE

Tamper
Div Cantron Corp
2401 Edmund Road
West Columbia
South Carolina 29169
Tel (803) 794-9180
Telex 573423

ENGS -7 38562

PARTS LIST

ITEM NO	PART NUMBER	LEG	DESCRIPTION (30)	AA	AB	AC	AD	AE	AF	AG	AH	AJ
166	A2661P18		LOCK WASHER			4						
167	A2661P16		SHIFT CAP ASM		1							
168	A2661P17		LEVER ARM		1							
169	A2661P19		BEARING					3	3			
170	A2661P20		BLOCK					1	1			
171	A2661P21		GEAR OUTPUT SFT					1	1			
172	A2661P22		GEAR 3RD STAGE					1	1			
173	A2661P23		RETAINER BEARING					1	1			
174	A2661P24		DETENT SPRING	1	1							
175	A2661P25		SNAP RING					1	1			
176	A2661P26		SLEEVE BRG			1	1					
177	A2661P27		HUB SHIFTING COLLAR			1	1					
178	A2661P28		GEAR COUNTER SHAFT DR			1	1					
179	A2661P29		COUNTER SHAFT			1	1					
180	A2661P30		GEAR, MAIN SHAFT			1	1					
181	A2661P31		SHAFT, MAIN			1	1					
182	A2661P32		ROLL PIN	1	1							
183	A2661P33		RAIL SHIFT	1	1							
184	A2661P34		ROLL PIN	2	2							
185	A2661P35		LINK BRAKE ACTIVATING	1	1							
186	A2661P38		RETAINER REAR BEARING				1					
187	A2661P39		ROLLER LOOSE				1					
188	A2661P36		SHAFT SHIFT SECTOR									
189	A2661P37		GEAR LOW MAIN SHAFT									
190	A2661P40		STAR WASHER					3	3			
191	A2661P41		CAP SCREW					4	4			
192	A2661P42		NUT					2	2			
193	A2661P43		WASHER					2	2			
194	A2661P44		STUD					2	2			
195	A2661P45		GEAR INPUT					1	1			
196	A2661P46		SHAFT 3RD STAGE					1	1			
197	A2661P47		DOWEL PIN					1	1			
198	A2661P48		ARM SHIFT		2					2	2	

ASSEMBLY IDENTIFIER — QUANTITY

	AA	AB	AC	AD	AE	AF	AG	AH	AJ
	SPEC 6424 Z76442 1X	SPEC 6431 Z76442 1Y HMD2225 D	SPEC 2628 Z76 7176X HMD2270 OB	SPEC 2616 Z76 2540-001 HMD1270 OA	SPEC 5947 Z76 2540-002 HMD334 HNC	SPEC 7216 Z76 2540-002 0-323026 0-01 HMD334 HNC	SPEC 3241 0-323021-0-01 HMD12700	MODEL 17419 SPEC 8696 9X01 HS17419A	2 SPEED SAE "D" INPUT G325GV01 HMD-12700

ASSEMBLY DESCRIPTION

DER									
DR								5860 165	6-3-87 HAP
CK									
APP									
MF									

REVISIONS

NO	DER	DESCRIPTION	DR	CK	APP	MF
1	ER 1036	NEW REL AA, AB, AC, AD, AE, AF, AG				
2	ER 1036 B14	ADDED IT'S 169 THRU 173 TO AE, AF 4/3/83				
3	ER 1036 B15	IT, 169 QTY WAS 1 (AE, AF) 4/24/84				
4	ER 1036 B17	ADDED IT'S 174, 175 10/12/84				
5	ER 1036 B18	ADDED IT'S 176, THRU 181 3/22/85				
6	ER 1036 B19	ADDED IT'S 182, 183, 184 4/11/85				
7	ER 1036 B20	ADDED IT. 185 4/12/85				
8	1522	ADDED IT. 198 & SHT. 7				
18		NO CHANGE				

ENG DWG NO: A2662X

SHEET 6 — CONT ON 7

DESCRIPTION (30): TRANSMISSION REPAIR PARTS

DRAWN: [illegible] DATE: 2/2/84

CHECKED: DATE:

APP: [illegible] DATE: FEB 9 1984

APP: DATE:

SHEET 6 — CONT ON 7 — ENG DWG NO A2662X

INITIALS DATE

SCANNED
REVISION OF THIS DRAWING HAS BEEN SCANNED INTO THE CADCAM/DAIR BASE

Tamper
Div. Canron Corp
2401 Edmund Road
West Columbia
South Carolina 29169
Tel: (803) 794-8160
Telex 573422

ENGS -7 38562

PARTS LIST

FIG	ITEM NO	PART NUMBER	DESCRIPTION (29)	AA	AB	AC	AD	AE	AF	AG	AH	AJ		
				QUANTITY										
	199	A2661P49	SELECTOR SHIFT			2				2		2		
	200	L425826	MOTOR ADAPTOR (JRM/STM)		1									
	201	A2661P50	PLUG SHIPPING								1			
	202	A2661P51	PIN DOWEL								1			
	203	A2661P52	O-RING ARP258								1			
	204	A2661P53	SNAP RING								1			
	205	A2661P54	BEARING								2			
	206	A2661P55	BEARING								1			
	207	A2661P56	BEARING								2			
	208	A2661P57	BEARING CONE								2			
	209	A2661P58	BEARING CUP								2			
	210	A2661P59	OIL SEAL								1			
	211	A2661P60	BALL								2			
	212	A2661P61	BEARING								2			
	213	A2661P62	RG RET INT								1			
	214	A2661P63	SPRING DETENT								1			
	215	A2661P64	GEAR								1			
	216	A2661P65	GEAR 2ND								1			
	217	A2661P66	SHAFT 2ND								1			
	218	A2661P67	GEAR 26T								1			
	219	A2661P68	SHIFT COLLAR								1			
	220	A2661P69	SHAFT OUT								1			
	221	A2661P70	GEAR 43T								1			
	222	A2661P71	SHAFT INPUT								1			
	223	A2661P72	SPACER								1			
	224	A2661P73	SPACER								1			
	225	A2661P74	COUPLING					1						
	226	A2661P75	GEAR 3RD MAINSHAFT											
	227	B8668P37	OUTPUT FLANGE								1			
	228	B8668P17	O RING ARP326								1			
	229	B8668P07	WASHER								1			
	230	A2661P77	CAPSCREW								1			
	231	A2661P78	GRP COMPANION FLANGE								1			

ASSEMBLY IDENTIFIER

	AA	AB	AC	AD	AE	AF	AG	AH	AJ
					SPEC 5947 NMB384 NHB Z 751540.01		HMDCI 17400 2-SPEED 359 61X01	4 SPEED HYD SAE "D" INPUT H5179-7A G325BY01	HMD-12700

ASSEMBLY DESCRIPTION

	AA	AB	AC	AD	AE	AF	AG	AH	AJ
ER							5860 169		
DR								6-3-97 HAP	
CK									
APP									
MF									

REVISIONS

NO	ER	DESCRIPTION	DR	CK	APP	MF
8	1522	IT. 199				
9	6674.37	ADDED IT-200				
10	5860 243	ADDED IT. 225 6 JAN 93	AD			
11	—	NO CHG				
12	6950.1	ADDED IT.S 227 THRU 231				
13	—	NO CHG.				

SCANNED

REVISION ____ OF THIS DRAWING HAS BEEN SCANNED INTO THE CAD/CAM DATA BASE

INITIALS ____ DATE ____

ENG DWG NO A2662X

SHEET 7 CONT ON 8

DESCRIPTION (30) TRANSMISSION REPAIR PARTS

DRAWN

DATE 8/30/96

CHECKED

DATE

APP

DATE

APP

DATE

TAMPER CORP.
2401 Edmund Road-Box 20
Cayce-West Columbia
South Carolina 29171-0020
Tel (803) 794-9150

ENGS 34

PARTS LIST

FIG	ITEM NO	PART NUMBER	DESCRIPTION (29)	AA	AB	AC	AD	AE	AF	AG	AH	AJ
	232	A2661 P79	OIL TROUGH								1	
	233	A2661 P80	SHIFT FORK								1	
	234	A2661 P81	PIN								1	
	235	A2661 P82	SHIFT BLOCK								2	
	236	A2661 P83	IDLER PIN								2	
	237	A2661 P84	CLEVIS PIN								2	
	238	A2661 P85	SHIFT COVER								1	
	239	A2661 P86	SHIFT ROD								1	
	240	A2661 P87	BUSHING								1	
	241	A2661 P88	BUSHING								1	
	242	A2661 P89	OIL SEAL								1	
	243	A2661 P90	PIN								1	
	244	A2661 P91	PLUG								1	
	245	A2661 P92	SPEED SENSOR								1	
	246	A2661 P93	FLANGE COMPANION					2				
	247	A2661 P94	BEARING 2ND STAGE					1	1			
	248	A2661 P95	COVER, SIDE	1								
	249	A2661 P96	GASKET	2								
	250	A2661 P97	CAPSCREW	12								
	251	A2661 P98	STREET ELBOW	1								
	252	A2661 P99	PLUG	1								
	253											

ASSEMBLY IDENTIFIER / QUANTITY

2 SPEED MODEL 17HC												
4 SPEED HYD. SAE "D" INPUT HS 17414 B9616X01												
HMD-12X8 G325&Y01												

ENG DWG NO: A2662X

SHEET: 8 — CONT ON: —

DESCRIPTION (30): TRANSMISSION REPAIR PARTS

DRAWN: [illegible] DATE: 8/30/85 CHECKED: DATE: APP: DATE: APP: DATE:

REVISIONS

NO	ER	DESCRIPTION	DR	CK	APP	MF
13	7758.2	ADD'D 232 THRU 245	[illegible]			
14	7933.1	ADDED IT 246	RJH	[illegible]	[illegible]	
15	7933.2	ADDED IT. 247	DAV		WAC	
16		ADDED ITS-248-252	[illegible]			

SHEET: 8a — CONT ON: 1 — ENG DWG NO: A2662X

SCANNED

REVISION ____ OF THIS DRAWING HAS BEEN SCANNED INTO THE CAD/CAM DATA BASE

INITIALS: [illegible] DATE: 12/85

ASSEMBLY DESCRIPTION

ER												
DR										6-97 HAP		
CK												
APP												
MF												

Tamper

TAMPER CORP.
2401 Edmund Road-Box 20
Cayce-West Columbia
South Carolina 29171-0020
Tel (803) 794-9160

ENGS-34

ENG DWG NO
A2662X

REVISIONS							
NO	DER	DESCRIPTION	ZONE	DR	CK	APP	MF
1	ER1036	NEW REL		DGN			
2	—	NO CHG.					
3	ER1036 Pg 15	ADD'D IT. 149 4/25/84	A-3	DGV			
4	ER1036 Pg 17	ADD'D IT 174	C-3	10-23-84 DGN			
5	—	NO CHG.					
6	ER1036 Pg 19	ADD'D IT's 182, 183, 184	C-2	4-11-85 DGN			
7	ER 1036 Pg 20	ADD'D IT. 185	C-2	4-17-85 DGN			
8	—	NO CHG.					
9	5274,37	ADDED IT-200	A2	Amg	DGN		
16		NO CHG.					

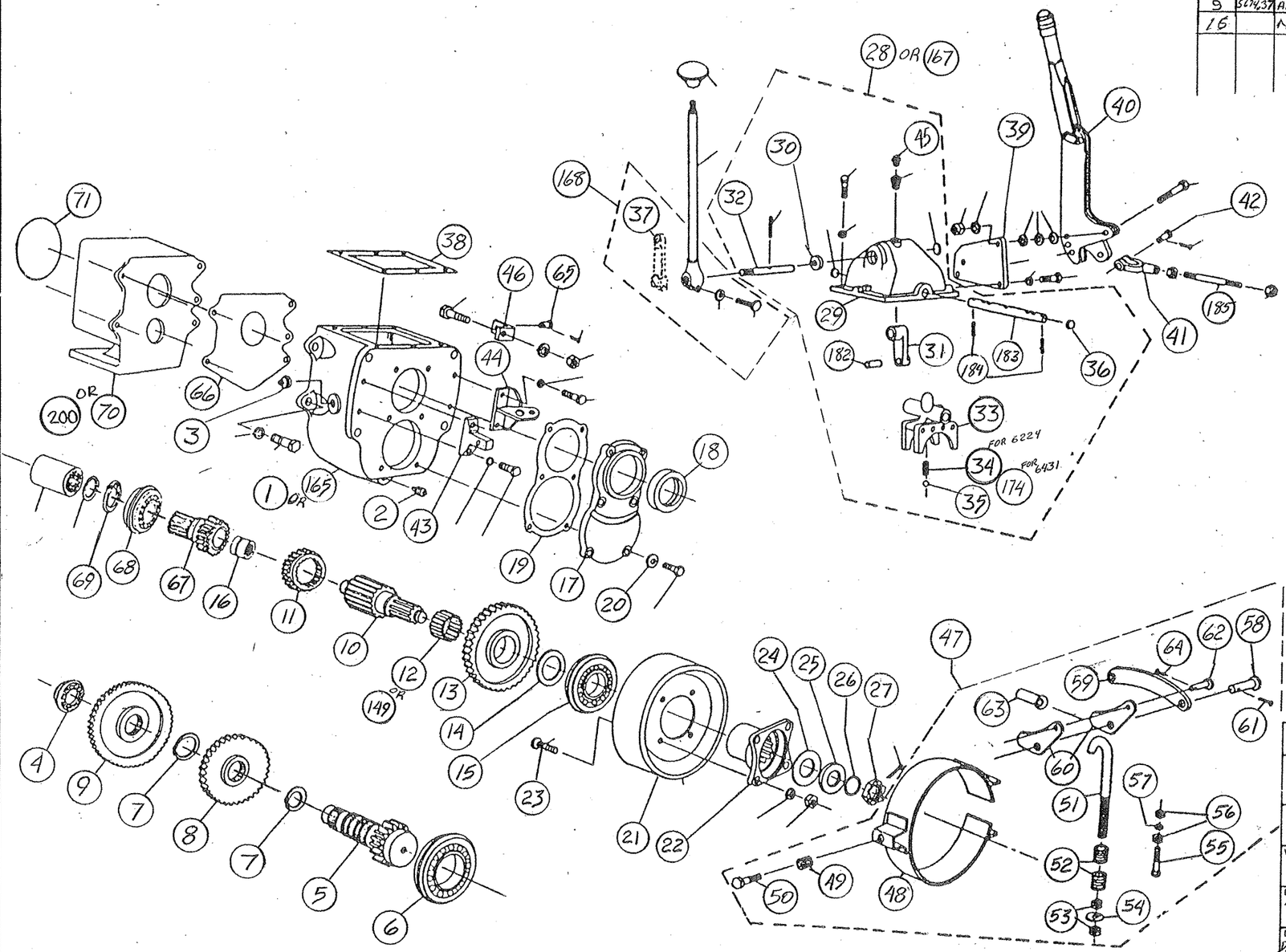

ITEM NO	PART NO	LEG	DESCRIPTION

THIS DOCUMENT CONTAINS PROPRIETARY INFORMATION AND SUCH INFORMATION MAY NOT BE DISCLOSED TO OTHERS FOR ANY PURPOSE OR USED FOR MANUFACTURING PURPOSES WITHOUT THE WRITTEN PERMISSION OF TAMPER.

3rd ANGLE PROJECTION

DO NOT SCALE

WEIGHT lbs.

IMPLIED TOLERANCES
ALL DIMENSIONS ARE IN INCHES — TOLERANCE UNLESS OTHERWISE SPECIFIED

NOMINAL SIZE RANGE OVER	TO	PLUS OR MINUS FRACTION	2 PLACE DECIMAL	3 PLACE DECIMAL	NOMINAL SIZE RANGE OVER	TO	PLUS OR MINUS FRACTION	2 PLACE DECIMAL	3 PLACE DECIMAL
—	1	1/64	01	003	6	24	3/64	03	.008
1	6	1/32	02	.005	24	—	1/16	05	.010

ANGULAR DIMENSIONS PLUS OR MINUS 1 DEGREE
✓ ALL MACHINED SURFACES TO HAVE A SURFACE FINISH OF 125 MICROINCHES UNLESS OTHERWISE SPECIFIED

DESCRIPTION (30)
TRANSMISSION REPAIR PARTS (FUNK)

DRAWN	DATE	MACHINE TYPE
DGVolmange	2/2/84	SPEC 6424/6431
CHECKED	DATE	
APP WAK	DATE Feb 9/84	
APP	DATE	

Tamper
Div Canron Corp
2401 Edmund Road
West Columbia
South Carolina 29169
Tel (803) 794-9160
Telex 573423

ENG. DWG. NO. A2662X

SHEET 1 CONT ON 2

american blueprint of columbia

ENGS -10 51713

ENG. DWG NO
A2662X

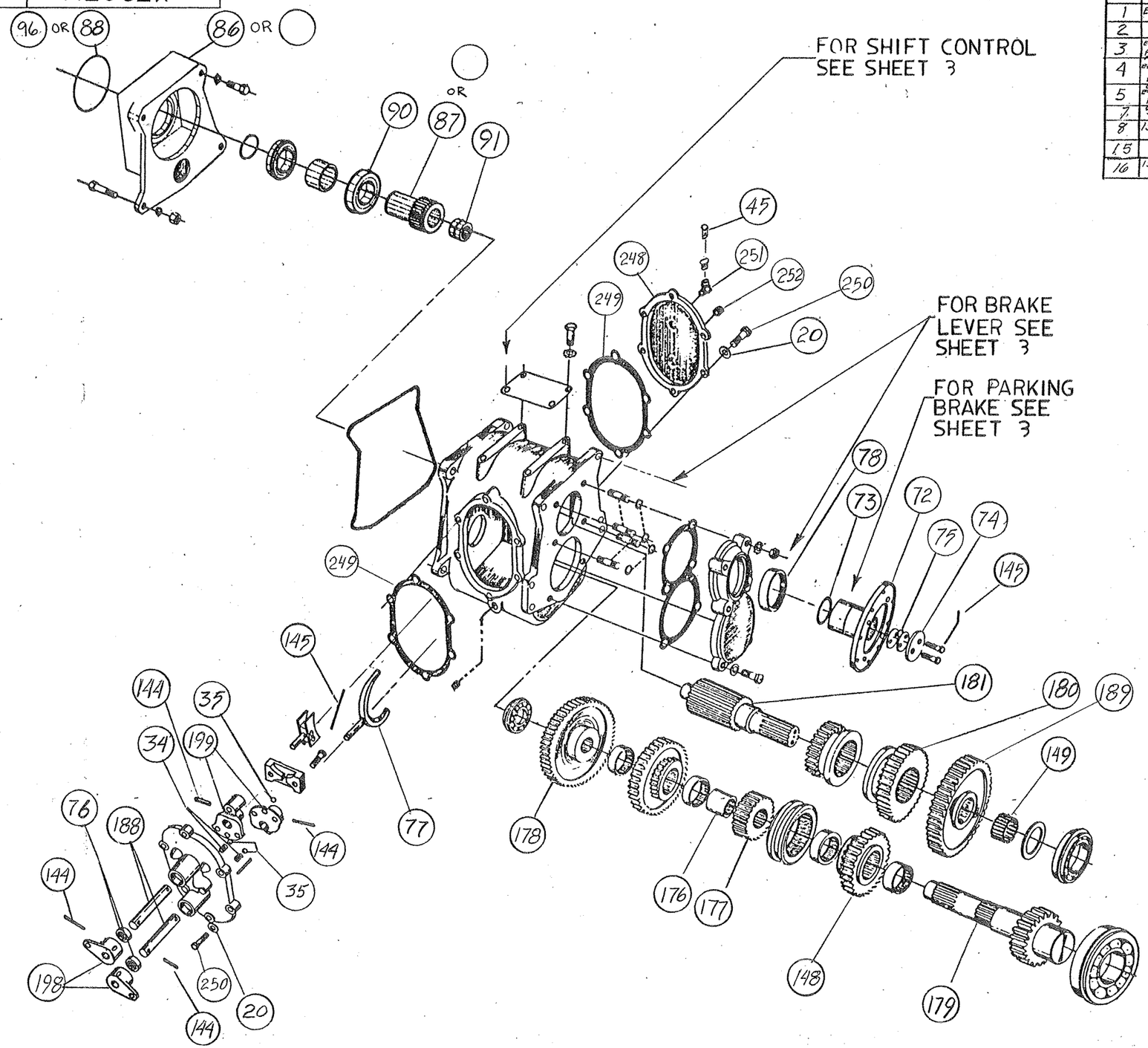

REVISIONS							
NO	DER	DESCRIPTION	ZONE	DR	CK	APP	MF
1	ER 1036	NEW REL		PGV			
2	—	NO CHG					
3	ER 1036 & 15	ADDED IT. 149 4/24/84	C3	RBV			
4	ER 1036 & 17	CHG'D IT. 78 TO IT. 76 IT. 76 TO IT. 78	A3 C2	10-17-84 RBV			
5	ER 1036 & 18	ADD'D IT'S 176 THRU 181	B3 C3 C4	3-22-85 RBV			
7	—	NO CHG					
8	1522	ADD'D IT'S 198, 199		RBV 8-30-90			
15		NO CHANGE					
16	1522 -01	ADDED ITS - 248 - 252		RBV 5-1-01			

ITEM NO	PART NO	LEG	DESCRIPTION	QTY

THIS DOCUMENT CONTAINS PROPRIETARY INFORMATION AND SUCH INFORMATION MAY NOT BE DISCLOSED TO OTHERS FOR ANY PURPOSE OR USED FOR MANUFACTURING PURPOSES WITHOUT THE WRITTEN PERMISSION OF TAMPER.

3rd ANGLE PROJECTION

DO NOT SCALE

WEIGHT lbs.

IMPLIED TOLERANCES
ALL DIMENSIONS ARE IN INCHES - TOLERANCE UNLESS OTHERWISE SPECIFIED

NOMINAL SIZE RANGE OVER	TO	PLUS OR MINUS FRACTION	2 PLACE DECIMAL	3 PLACE DECIMAL	NOMINAL SIZE RANGE OVER	TO	PLUS OR MINUS FRACTION	2 PLACE DECIMAL	3 PLACE DECIMAL
—	1	1/64	.01	.003	6	24	3/64	.03	.008
1	6	1/32	.02	.005	24	—	1/16	.05	.010

ANGULAR DIMENSIONS PLUS OR MINUS 1 DEGREE
ALL MACHINED SURFACES TO HAVE A SURFACE FINISH OF 125 MICROINCHES UNLESS OTHERWISE SPECIFIED

DESCRIPTION (30)
TRANSMISSION REPAIR PARTS (FUNK)

DRAWN	DATE	MACHINE TYPE
PGVanhuange	2/2/84	SPEC 2628 / 3241
CHECKED	DATE	
APP WHL	DATE FEB 9/84	
APP	DATE	

Tamper
Div Canron Corp
2401 Edmund Road
West Columbia
South Carolina 29169
Tel (803) 794-9160
Telex 573423

ENG. DWG. NO.
A2662X

SHEET 2 CONT ON 3

american blueprint of columbia
ENGS 10 51713

ENG. DWG NO A2662X

REVISIONS							
NO	DER	DESCRIPTION	ZONE	DR	CK	APP'	MF
1	ER1036	NEW REL		SON			
1B	—	NO CHG					

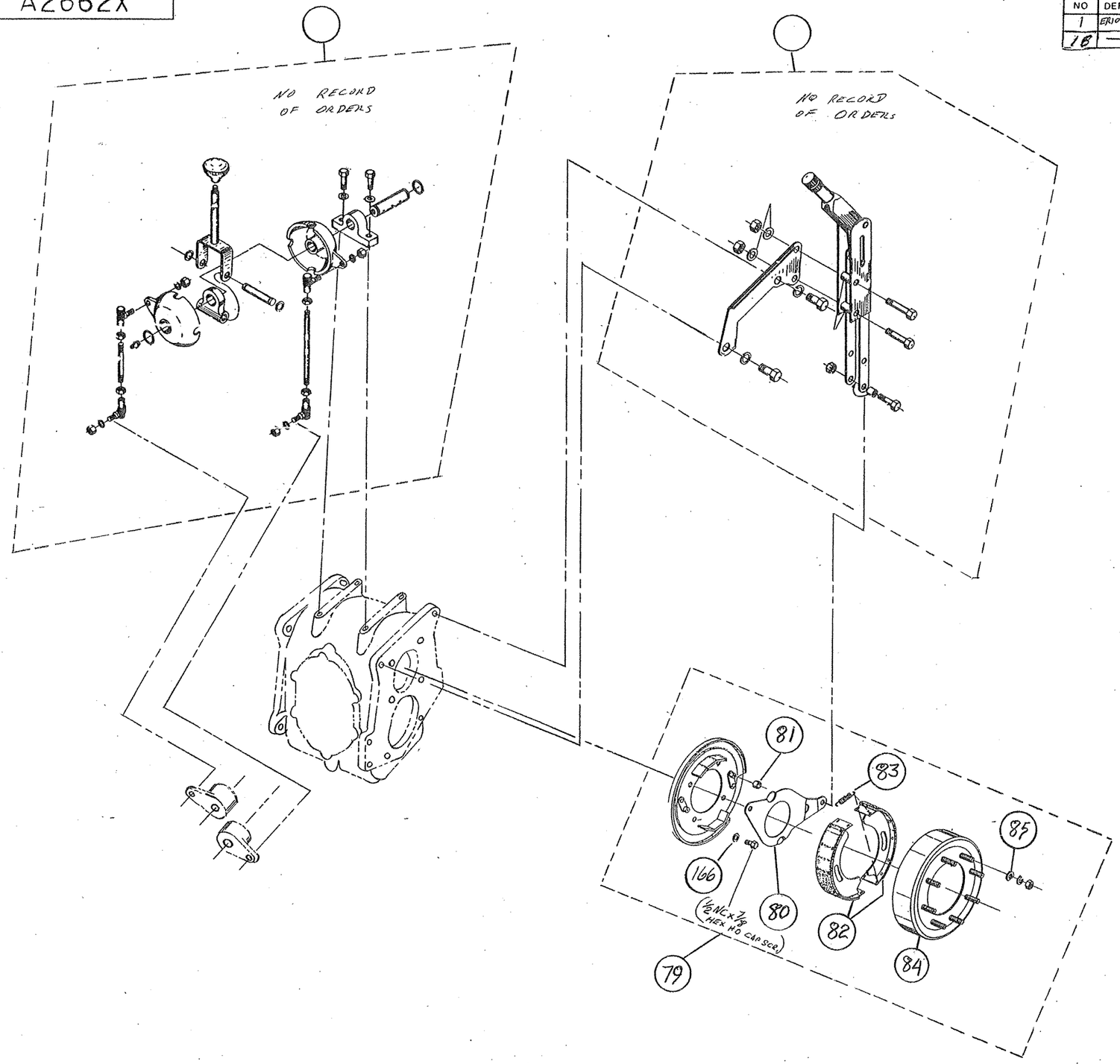

ITEM NO	PART NO	LEG	DESCRIPTION	QTY

THIS DOCUMENT CONTAINS PROPRIETARY INFORMATION AND SUCH INFORMATION MAY NOT BE DISCLOSED TO OTHERS FOR ANY PURPOSE OR USED FOR MANUFACTURING PURPOSES WITHOUT THE WRITTEN PERMISSION OF TAMPER

3rd ANGLE PROJECTION

DO NOT SCALE

WEIGHT lbs.

IMPLIED TOLERANCES
ALL DIMENSIONS ARE IN INCHES – TOLERANCE UNLESS OTHERWISE SPECIFIED

NOMINAL SIZE RANGE		PLUS OR MINUS			NOMINAL SIZE RANGE		PLUS OR MINUS		
OVER	TO	FRACTION	2 PLACE DECIMAL	3 PLACE DECIMAL	OVER	TO	FRACTION	2 PLACE DECIMAL	3 PLACE DECIMAL
—	1	1/64	01	.003	6	24	3/64	.03	.008
1	6	1/32	02	.005	24	—	1/16	.05	.010

ANGULAR DIMENSIONS PLUS OR MINUS 1 DEGREE

ALL MACHINED SURFACES TO HAVE A SURFACE FINISH OF 125 MICROINCHES UNLESS OTHERWISE SPECIFIED

DESCRIPTION (30)

TRANSMISSION REPAIR PARTS (FUNK)

DRAWN P.G. Van Fossen	DATE 2/2/84	MACHINE TYPE
CHECKED	DATE	
APP WMZ	DATE FEB 9/84	
APP	DATE	

Tamper
Div Tenaron Corp
2401 Edmund Road
West Columbia
South Carolina 29169
Tel (803) 794-9160
Telex 573423

SHEET 3 CONT ON 4

ENG. DWG. NO A2662X

american blueprint of columbia
ENGS -10 51713

ENG DWG NO
A2662X

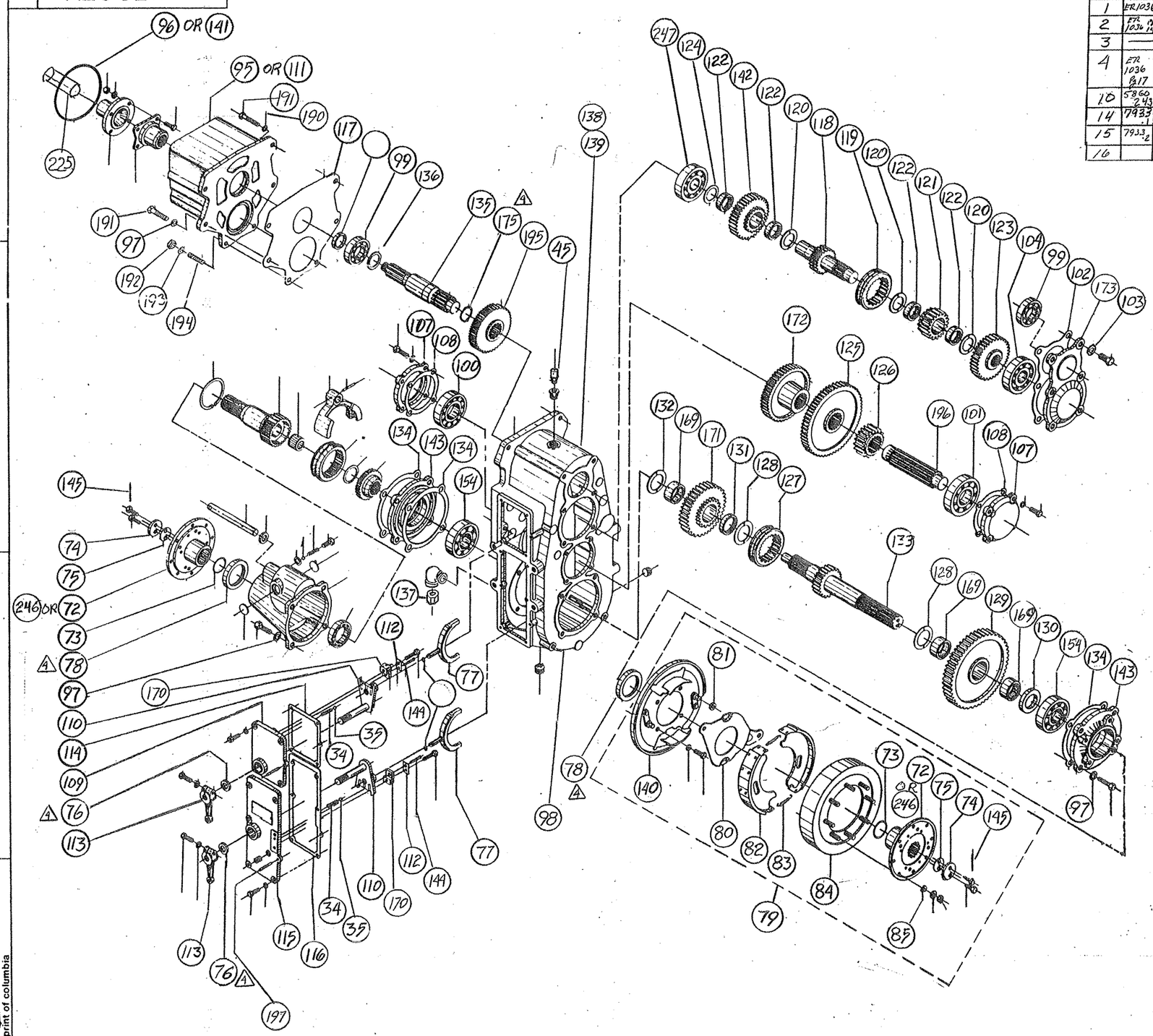

REVISIONS							
NO	DER	DESCRIPTION	ZONE	DR	CK	APP	MF
1	ER1036	NEW REL		SJN			
2	ER 1036 & 1041	ADDED IT'S 169 THRU 173 4/3/84	B2, A4, C2 A3	SJN			
3	—	NO CHG					
4	ER 1036 B17	CHG'D IT. 78 to IT. 76 IT. 76 to IT. 78 ADD'D IT. 175	A3 A4 A3 B3 B2	10-17-84 SJN			
10	5860 243	ADDED IT. #225 6 JAN 93	A-1	AD	SJN	RJM	
14	7933 1	ADDED IT 246	A 3 C 3	RJM	JA		
15	7933 2	IT. 247 WAS IT. 15	B1	DZV	JA	WHC	
16		NO CHG					

THIS DOCUMENT CONTAINS PROPRIETARY INFORMATION AND SUCH INFORMATION MAY NOT BE DISCLOSED TO OTHERS FOR ANY PURPOSE OR USED FOR MANUFACTURING PURPOSES WITHOUT THE WRITTEN PERMISSION OF TAMPER.

3rd ANGLE PROJECTION

DO NOT SCALE

WEIGHT lbs.

IMPLIED TOLERANCES
ALL DIMENSIONS ARE IN INCHES – TOLERANCE UNLESS OTHERWISE SPECIFIED

NOMINAL SIZE RANGE		PLUS OR MINUS			NOMINAL SIZE RANGE		PLUS OR MINUS		
OVER	TO	FRACTION	2 PLACE DECIMAL	3 PLACE DECIMAL	OVER	TO	FRACTION	2 PLACE DECIMAL	3 PLACE DECIMAL
—	1	1/64	.01	.003	6	24	3/64	.03	.008
1	6	1/32	.02	.005	24	—	1/16	.05	.010

ANGULAR DIMENSIONS PLUS OR MINUS 1 DEGREE

ALL MACHINED SURFACES TO HAVE A SURFACE FINISH OF 125 MICROINCHES UNLESS OTHERWISE SPECIFIED

DESCRIPTION (30)
TRANSMISSION REPAIR PARTS (FUNK)

DRAWN	DATE 2/2/84	MACHINE TYPE SPEC 5947/7216
CHECKED	DATE	
APP WHC	DATE FEB 9/84	Tamper — Div Canron Corp, 2401 Edmund Road, West Columbia, South Carolina 29169, Tel (803) 794-9160, Telex 573423
APP	DATE	
SHEET 4	CONT ON 5	ENG. DWG. NO. A2662X

ITEM NO	PART NO.	LEG	DESCRIPTION	QTY

american blueprint of columbia
51713

ENG DWG. NO.
A2662X

REVISIONS							
NO.	ER	DESCRIPTION	ZONE	DR	CK	APP	MF
9	5860, 169	NEW RELEASE AH					
11		NO CHG.					
12	6950.1	ADD'D 227 THRU 231					
13	7758.2	ADD'D 232 THRU 245					
16		NO CHG					

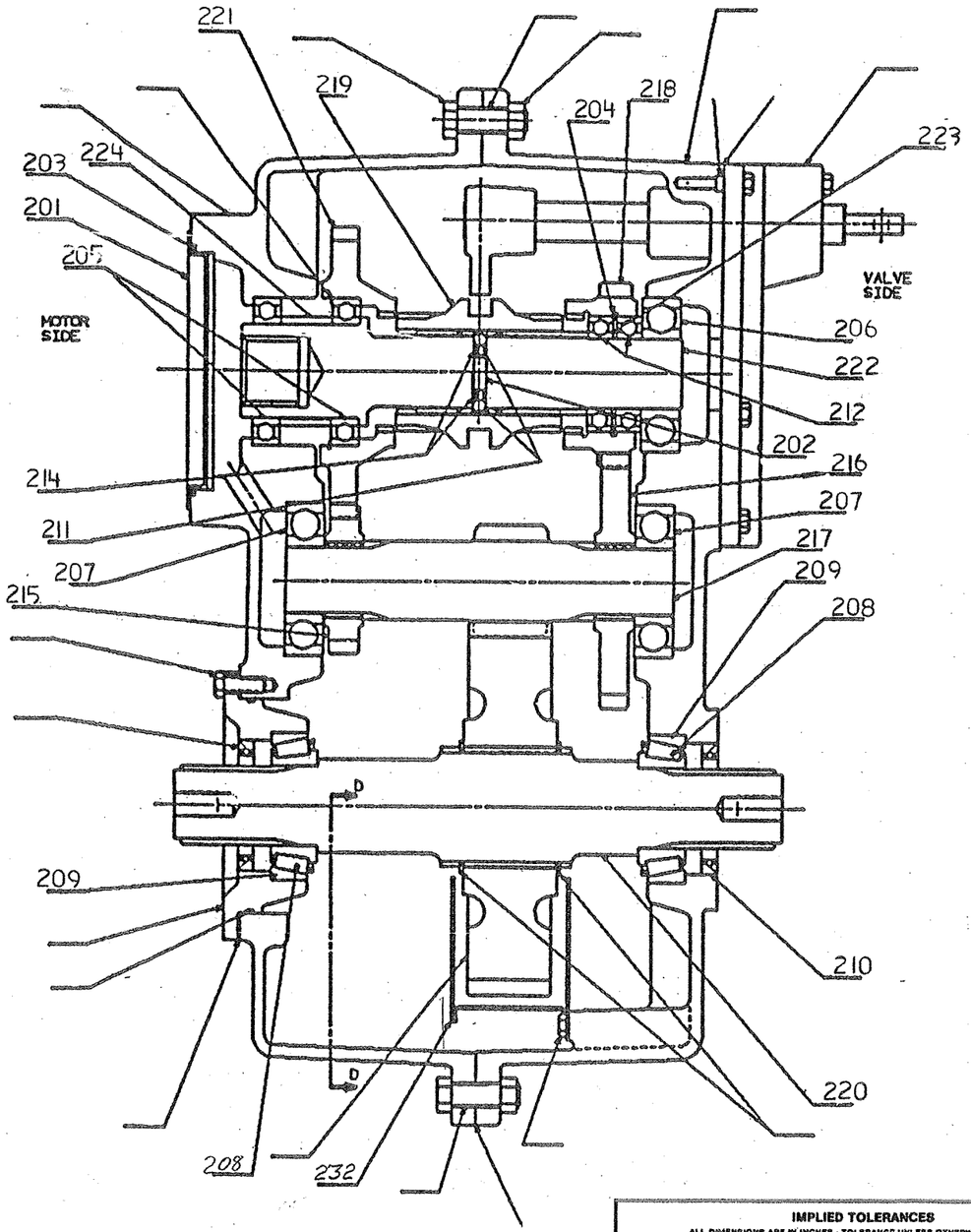

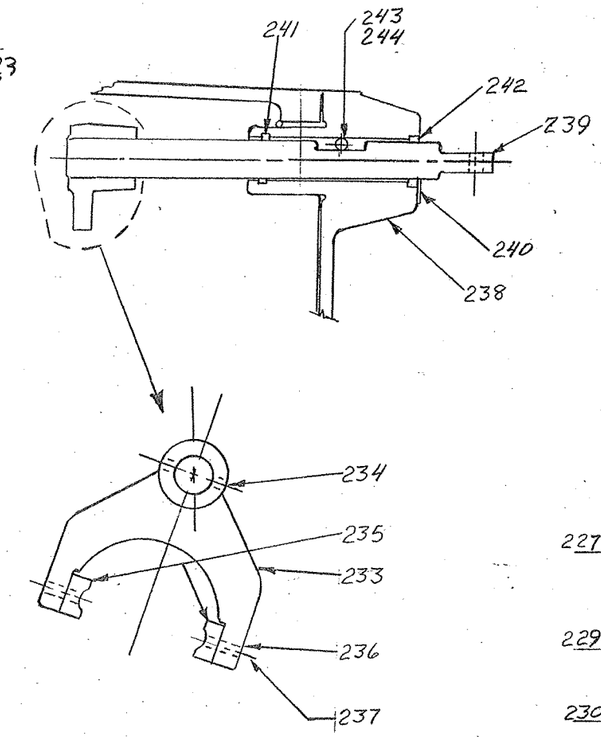

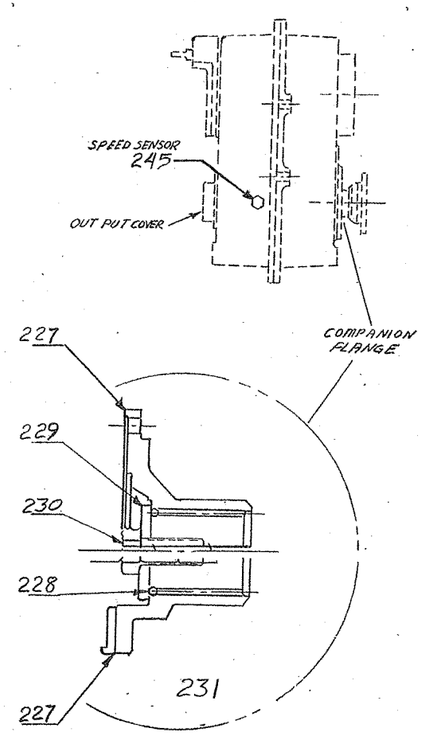

FIG NO.	ITEM NO.	PART NUMBER	DESCRIPTION AND MATERIAL SIZE (REF ONLY)	QTY

IMPLIED TOLERANCES
ALL DIMENSIONS ARE IN INCHES - TOLERANCE UNLESS OTHERWISE SPECIFIED

NOMINAL SIZE RANGE		PLUS OR MINUS			NOMINAL SIZE RANGE		PLUS OR MINUS		
OVER	TO	FRACTION	2 PLACE DECIMAL	3 PLACE DECIMAL	OVER	TO	FRACTION	2 PLACE DECIMAL	3 PLACE DECIMAL
–	1	1/64	.01	.005	6	24	3/64	.03	.008
1	6	1/32	.02	.005	24	–	1/16	.05	.010

ANGULAR DIMENSIONS PLUS OR MINUS 1 DEGREE

√ ALL MACHINED SURFACES TO HAVE A SURFACE FINISH OF 125 MICROINCHES UNLESS OTHERWISE SPECIFIED.

WEIGHT lbs.

3rd ANGLE PROJECTION

DO NOT SCALE

LAST ITEM NO. USED

DESCRIPTION (30)
TRANSMISSION REPAIR PARTS (FUNK)

DRAWN	DATE	MACHINE TYPE
[illegible]	8-5-92	HS 1741A 2 SPEED MODEL 17400
CHECKED	DATE	
APP-ENG	DATE	
APP-MFG	DATE	

SHEET 5 CONT. ON

TAMPER CORP.
2401 Edmund Road-Box 20
Cayce-West Columbia
South Carolina 29171-0020
Tel. (803) 794-9150

ENG. DWG. NO. A2662X

THIS DOCUMENT CONTAINS PROPRIETARY INFORMATION AND SUCH INFORMATION MAY NOT BE DISCLOSED TO OTHERS FOR ANY PURPOSE OR USED FOR MANUFACTURING PURPOSES WITHOUT THE WRITTEN PERMISSION OF TAMPER.

ENGS-31A

american blueprint of columbia 316727

H7145XAA

REVISIONS							
NO	ER	DESCRIPTION	ZONE	DR	CK	APP	MF
A	13073 .31	NEW RELEASE		EP			
B	100209	IT.2 WAS H5133WBD		JFB	WG	WG	

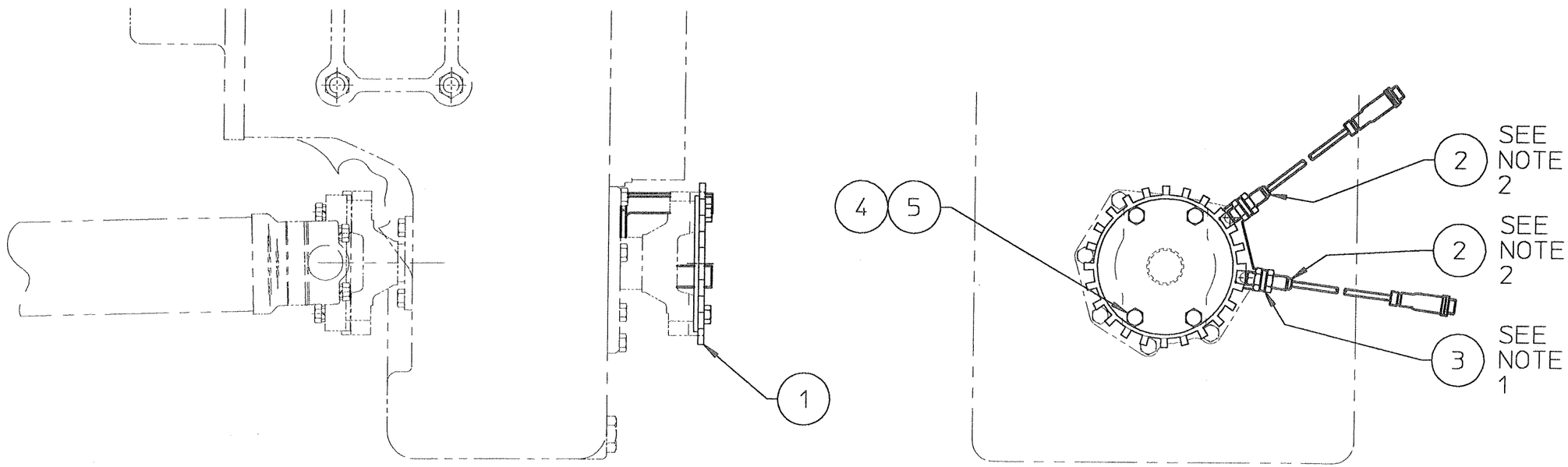

NOTES:
1) REPLACE HEX BOLTS USED TO SECURE PROX. SENSOR BRKT. WITH SIMILAR BOLTS 1/4" LONGER.
2) GAP BETWEEN PROXIMITY SENSORS, ITEM 2, AND SPROCKET, ITEM 1, TO BE 0.083 INCHES.

FIG NO.	ITEM NO.	PART NUMBER	DESCRIPTION AND MATERIAL SIZE (REF.ONLY)	QTY
	5	A0061013	1/2 MED. LOCK WASHER	4
	4	A0036153	1/2-20 X 1 1/2" HHCS	4
	3	G0461X01	PROX. SWITCH BRKT.	1
	2	H5133WAS	M12 OUTPUT SPEED COND	2
	1	D9810Y02	XMSN SPEED SPROCKET	1

IMPLIED TOLERANCES
ALL DIMENSIONS ARE IN INCHES-TOLERANCE UNLESS OTHERWISE SPECIFIED

NOMINAL SIZE RANGE		PLUS OR MINUS			NOMINAL SIZE RANGE		PLUS OR MINUS		
OVER	TO	FRACTION	2 PLACE DECIMAL	3 PLACE DECIMAL	OVER	TO	FRACTION	2 PLACE DECIMAL	3 PLACE DECIMAL
-	1	1/64	.01	.003	6	24	3/64	.03	.008
1	6	1/32	.02	.005	24	-	1/16	.05	.010

ANGULAR DIMENSIONS PLUS OR MINUS 1 DEGREE
ALL MACHINED SURFACES TO HAVE A SURFACE FINISH OF 125 MICROINCHES UNLESS OTHERWISE SPECIFED.

WELDING SPECIFICATION

UNLESS OTHERWISE SPECIFIED ALL WELDS SHOULD ADHERE TO FAIRMONT TAMPER WELDING SPECIFICATION NO. 101

WEIGHT lbs.

3rd ANGLE PROJECTION

DO NOT SCALE

SHEET 1 CONT. ON –

DESCRIPTION 124: XMSN SPEED SENSING KIT

DRAWN EP	DATE 3-3-05	MACHINE TYPE MARK VI JUPITER
CHECKED WG	DATE 3-4-05	
APP-ENG WG	DATE 3-4-05	
APP-MFG	DATE	
LAST ECR. 10020 931	CHECKED dvan DATE 12-Jan-06	ENG.DWG.NO. H7145XAA

Fairmont Tamper™
2401 Edmund Road-Box 20
Cayce-West Columbia,
South Carolina 29171-0020
(803) 822-9160

PLOT SCALE = 1/4

THIS DOCUMENT CONTAINS PROPRIETARY INFORMATION AND SUCH INFORMATION MAY NOT BE DISCLOSED TO OTHERS FOR ANY PURPOSE OR USED FOR MANUFACTURING PURPOSES WITHOUT THE WRITTEN PERMISSION OF FAIRMONT TAMPER.

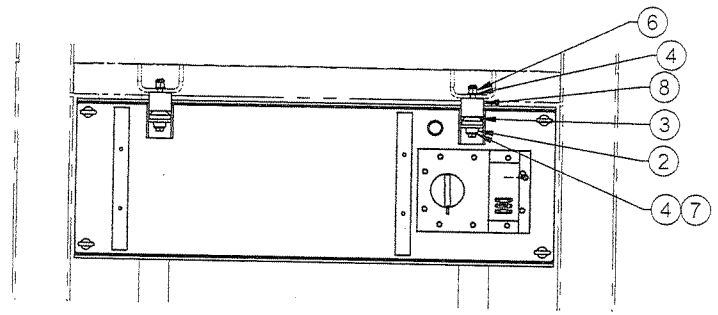

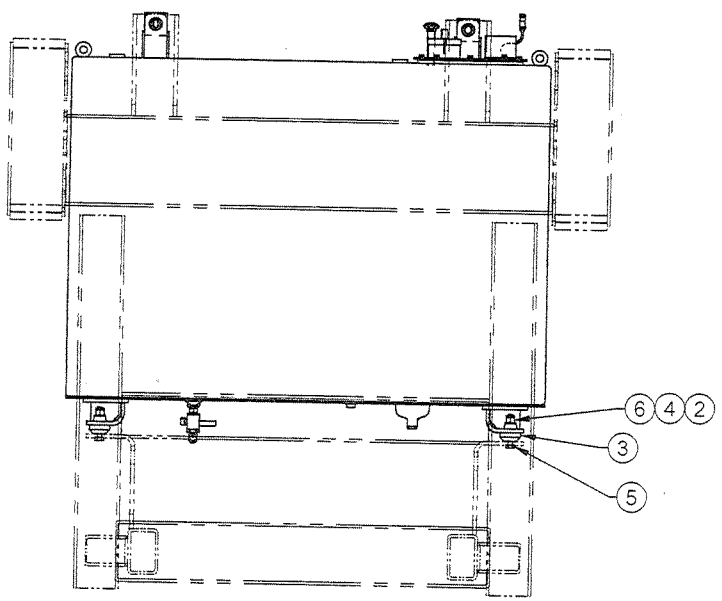

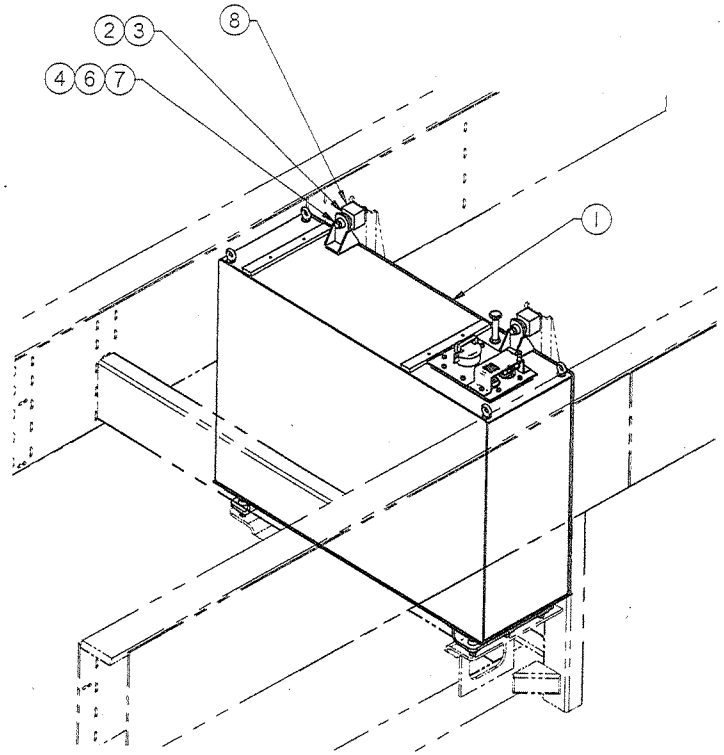

Item Number	Document Number	Title	Quantity
8	4007042	STEEL, MOUNTING BLOCK	2
7	A0036191	5/8-11 X 6 1/2 HHCS	2
6	L40006	ESNA NUT 5/8-11	8
5	A0036186	5/8-11 X 4 HHCS	6
4	A0059007	5/8 FLAT WASHER	10
3	Z768731-001	UPPER SHOCK MOUNT	8
2	Z768730-001	LOWER SHOCK MOUNT	8
1	4003895	FUEL TANK WLDT & ASSY	1

CONFIDENTIAL
© COPYRIGHT 2001 HARSCO TRACK TECHNOLOGIES. THIS DRAWING OR DOCUMENT IS THE PROPERTY OF HARSCO TRACK TECHNOLOGIES AND EMBODIES CONFIDENTIAL INFORMATION, TRADE SECRET INFORMATION, AND/OR KNOWHOW THAT IS THE PROPERTY OF HARSCO TRACK TECHNOLOGIES. BY ACCEPTING THIS DRAWING OR DOCUMENT, THE RECIPIENT AGREES (1) NOT TO PROVIDE, OR OTHERWISE MAKE AVAILABLE, THE DRAWING OR DOCUMENT, OR ANY INFORMATION OR KNOWHOW EMBODIED THEREIN, TO ANY THIRD PARTY AND (2) NOT TO REPRODUCE OR USE THE DRAWING OR DOCUMENT TO MANUFACTURE ANY APPARATUS OR DEVICE, WITHOUT THE PRIOR WRITTEN AUTHORIZATION OF HARSCO TRACK TECHNOLOGIES.

SOLID EDGE DRAWING

IMPLIED TOLERANCES
ALL DIMENSIONS ARE IN INCHES . TOLERANCE UNLESS OTHERWISE SPECIFIED.

Nominal Size	INCH Plus or Minus			Nominal Size	METRIC Plus or Minus		
Decimal	Tol	1 Place Decimal	2 Place Decimal	Decimal	Tol	1 Place Decimal	2 Place Decimal
0	4	.05	.030	0	1.00	.8	.127
8	24	.04	.020	142	400	1.0	.203
24	.	.08	.010	.	800	1.5	.254

UNLESS OTHERWISE SPECIFIED ALL HOLES, SPACE HOLES AT 1 THE LATITUDE HOLES AS PRESENTED (3)

THIRD ANGLE PROJECTION

CHANGE	R/L	REVISION	DATE
100115	A	NEW RELEASE	12/03/05

Description: FUEL TANK INSTALLATION
Drawing Number:
Model: 4010769.asm
Weight: 919.807 lbm
Scale: NS
Drawn: PJG 12/03/05
Checked: JOC
Approved: JOC
Material:
Customer: MK VI IRAQ
Harsco Track Technologies
Harsco
Columbia, SC
Part Number: 4010769
Rev: D
Sheet: 1 of 1

Plotted by pgleaton on 4/4/2006 4010769.dft

Workheads
(Tamping Components)

PARTS LIST

ITEM NO	PART NUMBER	DESCRIPTION	AA	AB	AC	AD	AE	AF	AG	AH	AJ
			QUANTITY								
1	A4887XAA	IDLER, TRAVERSE	2	2	2	0	2	2	2	2	2
2	A7870Y01	SLIDE PAD SHIM	2	2	2	0	2	2	2	2	2
3	A1294Y01	CHAIN REWORK	2	0	2	0	2	2	0	0	0
4	A1441X01	CHAIN GUARD	1	0	1	0	1	1	0	0	0
5	C0689XAA	W.H. SUPPORT WLDMT	2	2	2	2	2	2	2	2	2
6	A1293Y01	CAP LINK	4	4	4	0	4	4	4	4	4
7	0-3624021-0-01	LOAD ADAPTER	2	2	2	0	2	2	2	2	2
8	A1457X01	CHAIN GUARD	1	0	1	0	1	1	0	0	0
9	L411545	HYDR MOTOR	2	2	2	0	2	2	2	2	0
10	A0036003	1/4-20x3/4 H/H CPSCR	16	16	16	0	16	16	16	16	16
11	A0061008	1/4 MED LKWSHR	16	16	16	0	16	16	16	16	16
12	0-3019007-0-02	BELLEVILLE WSHR	28	28	28	0	28	28	28	28	28
13	L40006	5/8-11 LOCKNUT	2	2	2	0	2	2	2	2	2
14	A0061013	1/2 MED LKWSHR	24	24	24	16	24	24	24	24	20
15	A0036070	3/8-16x2 1/2 H/H CPSCR	2	2	2	0	2	2	2	2	2
16	A0036219	3/4-10x2 1/4 H/H CPSCR	16	16	16	0	16	16	16	16	16
17	L40108	3/4-10 HVY LOCKNUT	28	28	28	0	28	28	28	28	28
18	D8042Y01	SPROCKET ASSY	2	2	2	0	2	2	2	2	2
19	A1285X01	LINK	1	1	1	0	1	1	1	1	1
20	D3129YAA	LINK	0	1	1	0	0	0	1	1	1
21	0-3015004-0-18	HITCH PIN	2	2	2	0	2	2	2	2	2
22	0-3015002-0-28	CLEVIS PIN	4	4	4	0	4	4	4	4	4
23	C0701Y02	SHIM PLATE	4	4	4	4	4	4	4	4	4
24	A0036259	1"-8x4 H/H CPSCR	2	2	2	0	2	2	2	2	2
25	A0036085	3/8-16x3 1/2 H/H CPSCR	2	2	2	0	2	2	2	2	2
26	A0036072	3/8-16 x 3 H/H CPSCR	2	2	2	0	2	2	2	2	2
27	C0606VAB	VIBRATOR & W.H. ASSY	1	0	0	0	0	0	0	0	0
28	C0606VAA	VIBRATOR & W.H. ASSY	1	0	0	0	0	0	0	0	0
29	L41149	1"-8 LOCKNUT	2	2	2	0	2	2	2	2	2
30	A0036123	1/2-13x1 1/2 H/H CPSCR	16	16	16	16	16	16	16	16	16
31	A0055016	1/2-13 HEX NUT	4	4	4	0	4	4	4	4	4
32	A0036074	3/8-16 x 4 H/H CPSCR	2	2	2	0	2	2	2	2	2
33	A0068013	1/8x1" COTTER PIN	4	4	4	0	4	4	4	4	4
			MK IV (W/ LOWER NYLON GUIDE BLOCKS)	MALAYSIA TLPM	VENEZUELA	LOWER NYLON GUIDE BLOCKS KIT ADDITION	MK IV (W/ CONCR.SQ.CYL'S. & LOWER NYLON GUIDES)	MK IV DOUBLE TIE & LOWER NYLON GUIDES	MK VI STD 63" GAUGE	MK VI STD 60" GAUGE	HUNGARIAN TAMPER
		ASSEMBLY DESCRIPTION									
		ER	5288.6	5492.5			6447.22	7966.1	11479.3	11186	12013.17
		DR	R.J.M.	B.B.		CJW	B.B.	A.O.	P.J.G.	T.A.F.	P.J.G.
		CK	D.V.	DGV			D.V.	DGV	DGV	HW	HW
		APP		AML			AML	AML	JOC	AML	AML
		MF									

REVISIONS

NO	ER	DESCRIPTION	DR	CK	APP	MF
1	5121.63	NEW RELEASE	CJW	DGV	AD	
2	5288.25	ITEM 23 QTY WAS 12 ITEM 30 QTY WAS 16 ITEM 31 QTY WAS 4 > TAB AB	SPB	DGV		
3	5288.64	ITEM 3. TAB AB. QTY WAS 2	CR	DGV	MKT	
4	5288.89	ITEMS 23 & 30. TAB AB. QTY WAS 0	RJM	DGV		
5	5492.5	ITEM 31. TAB AB. QTY WAS 20 TAB AC ADDED	BB	DGV	AML	
6	5860.213	ITEM 5.TAB AA. QTY WAS 2 TAB AD ADDED	CJW	DGV	AD	
7	6594.1	ITEM 23 QTY WAS 12	RJM	DGV		
8	6447.22	ITEM 5. TAB AA. QTY WAS 0 TAB AD DELETED. TAB AE ADDED	BB	DGV	AML	
9	6746.17	ITEM 20. TABS AA & AE. QTYS WERE 1	HAP	DGV	AML	
10	7450.2	ITEM 26 WAS A0036069 14 AUG 95 ITEM 32 WAS A0036086	AO	DGV	JO'C	
11	7932.1	ITEM 18 WAS 0-3625008-0-03 14 DEC 95	AO	JA	JO'C	
12	8045.1	ITEM 21 WAS A4038Y01	CJW	JA	AD	
14	100365	IT-20 WAS A1284X01.	PJG	JOC	JOC	

SHEET 1
2 (CONT ON)
LAST ECR 8045.1
CHECKED hw
DATE 12-Apr-99
DWG NO C0605V

DWG NO 0605V
SHEET 1
CONT ON 2
DESCRIPTION (24) WH & TRAV ASSY
DRAWN C.J.WOLF
DATE 5-14-90
CHECKED D.V.
DATE 5/24/90
APP A.D.
DATE 5/23/90
APP
DATE

Fairmont Tamper™
2401 Edmund Road-Box 20
Cayce-West Columbia,
South Carolina 29171-0020
(803) 822-9160

PARTS LIST

ITEM NO	PART NUMBER	DESCRIPTION	AA	AB	AC	AD	AE	AF	AG	AH	AJ		
			QUANTITY										
34	A0036075	3/8-16x4 1/2 H/H CPSCR	2	2	2	0	2	2	2	2	2		
35	A0036220	3/4-10x2 1/2 H/H CPSCR	10	10	10	0	10	10	10	10	10		
36	L40387	3/8-16 ESNA NUT (HEAVY)	10	10	10	0	10	10	10	10	10		
37	A0036133	1/2-13x4 H/H CPSCR	4	4	4	0	4	4	4	4	4		
38	A0036068	3/8-16x2 H/H CPSCR	2	2	2	0	2	2	2	2	2		
~~39~~	~~A0062029~~	~~3/8-16x3/4 SOC HD CUP~~	~~2~~	~~2~~	~~2~~	~~0~~	~~2~~						
40	A0036303	3/8-16x1 1/4 H/H CPSCR	8	8	8	0	8	8	8	8	8		
41	A0060013	3/8 SAE WSHR	8	8	8	0	8	8	8	8	8		
42	A0061011	3/8 LKWSHR	10	10	10	0	10	10	10	10	10		
43	A0036221	3/4-10x2 3/4 H/H CPSCR	2	2	2	0	2	2	2	2	2		
44	0-1305838-0-01	ADAPTER PAWL	2	2	2	0	2	2	2	2	2		
45	0-3015001-0-23	PIN, DOWEL	2	2	2	0	2	2	2	2	2		
46	A0056009	1/2-20 HEX JAM NUT	2	2	2	0	2	2	2	2	2		
47	0-3372001-0-01	1" BORE CYL	2	2	2	0	2	2	2	2	2		
48	Z752500-010	3/8 DIAx1" HEX SOC SHLD	2	2	2	0	2	2	2	2	2		
49	0-1305836-0-01	PLATE, TOP	2	2	2	0	2	2	2	2	2		
50	0-1305839-0-01	SHIM	4	4	4	0	4	4	4	4	4		
51	0-1305835-0-01	BAR, GUIDE	4	4	4	0	4	4	4	4	4		
52	0-1305837-0-01	PAWL	2	2	2	0	2	2	2	2	2		
53	0-1305840-0-01	PLATE, BOTTOM	2	2	2	0	2	2	2	2	2		
54	0-1305834-0-01	BAR, MTG	2	2	2	0	2	2	2	2	2		
~~55~~	~~0-1305833-0-01~~	~~PLATE, MTG~~	~~1~~	~~1~~	~~1~~	~~0~~	~~1~~						
56	0-1305832-0-01	PLATE, MTG	1	1	1	0	1	1	1	1	1		
57	C0698VAA	SUPPORT ARM WLDMT	2	0	0	0	2	2	0	0	0		
58	C0698VAB	SUPPORT ARM WLDMT	2	0	0	0	2	2	0	0	0		
59	A0061023	1/2 HVY LKWSHR	20	20	20	20	20	20	20	20	20		
60	A0036124	1/2-13x1 3/4 H/H CPSCR	20	20	20	20	20	20	20	20	20		
61	C0692X01	SLIDE PAD, W.H. SUPPORT	2	2	2	2	2	2	2	2	2		
62	A0042024	1/2-13x1 1/4 FL HD ALN	10	10	10	10	10	10	10	10	10		
63	C0693X01	SHIM, SUPPORT BLOCK	4	4	4	4	4	4	4	4	4		
64	C0694XAA	SUPPORT BLOCK ASSY	4	4	4	4	4	4	4	4	4		
65	C0606VAC	VIBRATOR & W.H. ASSY.	0	1	0	0	0	0	0	0	0		
66	C0606VAD	VIBRATOR & W.H. ASSY.	0	1	0	0	0	0	0	0	0		
			MK IV (W/ LOWER NYLON GUIDE BLOCKS)	MALAYSIA TLPM	VENEZUELA	LOWER NYLON GUIDE BLOCKS KIT ADDITION	MK IV (W/ CONCR.SO.CYL'S. & LOWER NYLON GUIDES)	MK IV DOUBLE TIE & LOWER NYLON GUIDES	MK VI STD 63" GAUGE	MK VI STD 60" GAUGE	HUNGARIAN TAMPER		

REVISIONS

NO	ER	DESCRIPTION	DR	CK	APP	MF
10	7450.2	IT 34 WAS A0036073, IT 36 WAS A0055012 & QTY WAS 12, IT 42 QTY WAS 20, DELETED IT 55.	AO	DGV	JO'C	
11	7932.1	DELETED IT 39 14 DEC 95	AO	JA	AML	
12	---	NO CHANGE				
13	11785	IT. 63 QTY. WAS 8 ALL TABS 4/14/99	TCW	DGV	JBR	
14		NO CHANGE				

ASSEMBLY DESCRIPTION

ER	5288.6	5492.5	215	5860	6447.22	7966.1	11479.3	11186	1203			
DR	RJM	B.B.	CJW	D.V.	B.B.	AO	PJG	TAF	PJG			
CK	D.V.		D.V.		D.V.	DGV	DGV	HW	HW			
APP		AML			AML	AML	JOC	AML	AML			
MF												

Fairmont Tamper™
2401 Edmund Road-Box 20
Cayce-West Columbia,
South Carolina 29171-0020
(803) 822-9160

DWG NO -0605V
SHEET 2
CONT ON 3
DESCRIPTION (24) WH & TRAV ASSY
DRAWN C.J.WOLF
DATE 5-14-90
CHECKED D.V
DATE 5/24/90
APP A.D.
DATE 5/23/90
APP
DATE

SHEET 2
CONT ON 3
LAST ECR 8045.1
CHECKED DWG
DATE 12-Apr-99
DWG NO C0605V

PARTS LIST

ITEM NO	PART NUMBER	DESCRIPTION	AA	AB	AC	AD	AE	AF	AG	AH	AJ
			QUANTITY								
~~67~~	~~A1753WAD~~	~~SUPPORT ARM MOUNT~~	~~0~~	~~2~~							
~~68~~	~~0-2303363-0-03~~	~~SUPPORT ARM~~	~~0~~	~~2~~							
~~69~~	~~0-2303363-0-04~~	~~SUPPORT ARM~~	~~0~~	~~2~~							
70	A1457X03	CHAIN GUARD	0	1	0	0	0	0	0	0	0
71	A1441X03	CHAIN GUARD	0	1	0	0	0	0	0	0	0
~~72~~	~~Z766844-002~~	~~PLATE "SHIM"~~	~~0~~	~~12~~	~~0~~						
~~73~~	~~A0036127~~	~~1/2-13 x 2 1/2 H/H CPSCR~~	~~0~~	~~16~~	~~0~~						
74	X711016C	LOWER GUIDE ARM EXTENSION	0	2	0	0	0	0	0	0	0
75	A1294Y03	CHAIN REWORK	0	2	0	0	0	0	0	0	0
76	C1279VAA	WH & TRAVERSE HYDRAULICS	0	1	0	0	0	0	0	0	0
77	C2397WAB	SUPPORT ARM	0	2	2	0	0	0	2	2	2
78	C2397WAA	SUPPORT ARM	0	2	2	0	0	0	2	2	2
79	X711016A	LOWER GUIDE ARM EXTENSION	0	0	2	0	0	0	0	0	2
~~80~~	~~C8772WAA~~	~~W.H. SUPPORT WLDMT~~	~~2~~	~~0~~	~~0~~	~~0~~					
81	C0606VAG	VIBRATOR & W.H. ASSY.(R.H.)	0	0	0	0	1	0	0	0	0
82	C0606VAH	VIBRATOR & W.H. ASSY.(L.H.)	0	0	0	0	1	0	0	0	0
83	D3129YAA	LINK WELDMENT	1	0	0		1	1	0	0	0
84	C0606VAM	VIBRATOR & W/H ASSY	0	0	0		0	1	0	0	0
85	C0606VAL	VIBRATOR & W/H ASSY	0	0	0		0	1	0	0	0
86	G7906YAA	LOWER GUIDE ARM EXT	0	0	0		0	0	2	0	0
87	A1294Y05	CHAIN REWORK	0	0	0		0	0	2	0	0
88	A1441X04	CHAIN GUARD	0	0	0		0	0	1	0	0
89	A1457X04	CHAIN GUARD	0	0	0		0	0	1	0	0
90	G7906YAB	LOWER GUIDE ARM EXT	0	0	0		0	0	0	2	0
91	A1294Y06	CHAIN REWORK	0	0	0		0	0	0	2	0
92	A1441X05	CHAIN GUARD	0	0	0		0	0	0	1	0
93	A1457X05	CHAIN GUARD	0	0	0		0	0	0	1	0
94	A1294Y07	CHAIN REWORK	0	0	0		0	0	0	0	2
95	A1441X06	CHAIN GUARD	0	0	0		0	0	0	0	1
96	A1457X06	CHAIN GUARD	0	0	0		0	0	0	0	1
			MK IV (W/ LOWER NYLON GUIDE BLOCKS)	MALAYSIA TLPM	VENEZUELA	LOWER NYLON GUIDE BLOCKS KIT ADDITION	MK IV (W/ CONCR.SQ.CYL'S & LOWER NYLON GUIDES)	MK IV DOUBLE TIE & LOWER NYLON GUIDES	MK VI STD 63" GAUGE	MK VI STD 60" GAUGE	HUNGARIAN TAMPER

REVISIONS

NO	ER	DESCRIPTION	DR	CK	APP	MF
2	5288.25	ADDED ITEM 67-74 TAB AB	SPB	D.V		
3	5288.64	ADDED IT'S. 75,76	CR	D.V	MKT	
4	5288.89	REMOVED ITEM 67-69	RJM	D.V		
5	5492.5	ADDED IT'S. 77-79, DEL. IT'S. 72 & 73, Q'TY. IT-74, TAB AB, WAS 1. ADDED TAB AC.	B.B.	DGV	AML	
6	5860.213	ADDED IT.80 & TAB AD	CJW	DV	RJM	
8	6447.22	DEL'T.IT.80 & TAB AD; ADDED IT'S.81 & 82 & TAB AE.	B.B.	DGV	AML	
9	6746.17	ADDED IT-83.	HAP	DGV	AML	
14		NO CHANGE				

ASSEMBLY DESCRIPTION

ER	5288.6	5492.5	5860.213	6447.22	7966.1	11279.3	11186	12013.17	
DR		B.B.	CJW DGV	B.B.	AO	PJG	TAF	PJG	
CK				DGV	DGV	DGV	HW	HW	
APP		AML		AML	AML	JOC	AML	AML	
MF									

Fairmont Tamper
2401 Edmund Road-Box 20
Cayce-West Columbia,
South Carolina 29171-0020
(803) 822-9160

SHEET 3 CONT ON - LAST EGR. 8045 CHECKED hw DATE 12-Apr-99 DWG NO C0605V

DWG NO C0605V
SHEET 3
CONT ON -
DESCRIPTION (24) WH & TRAV ASSY
DRAWN SPB
DATE 7/6/90
CHECKED
DATE
APP
DATE
APP
DATE

END. DWG. NO. C0605V

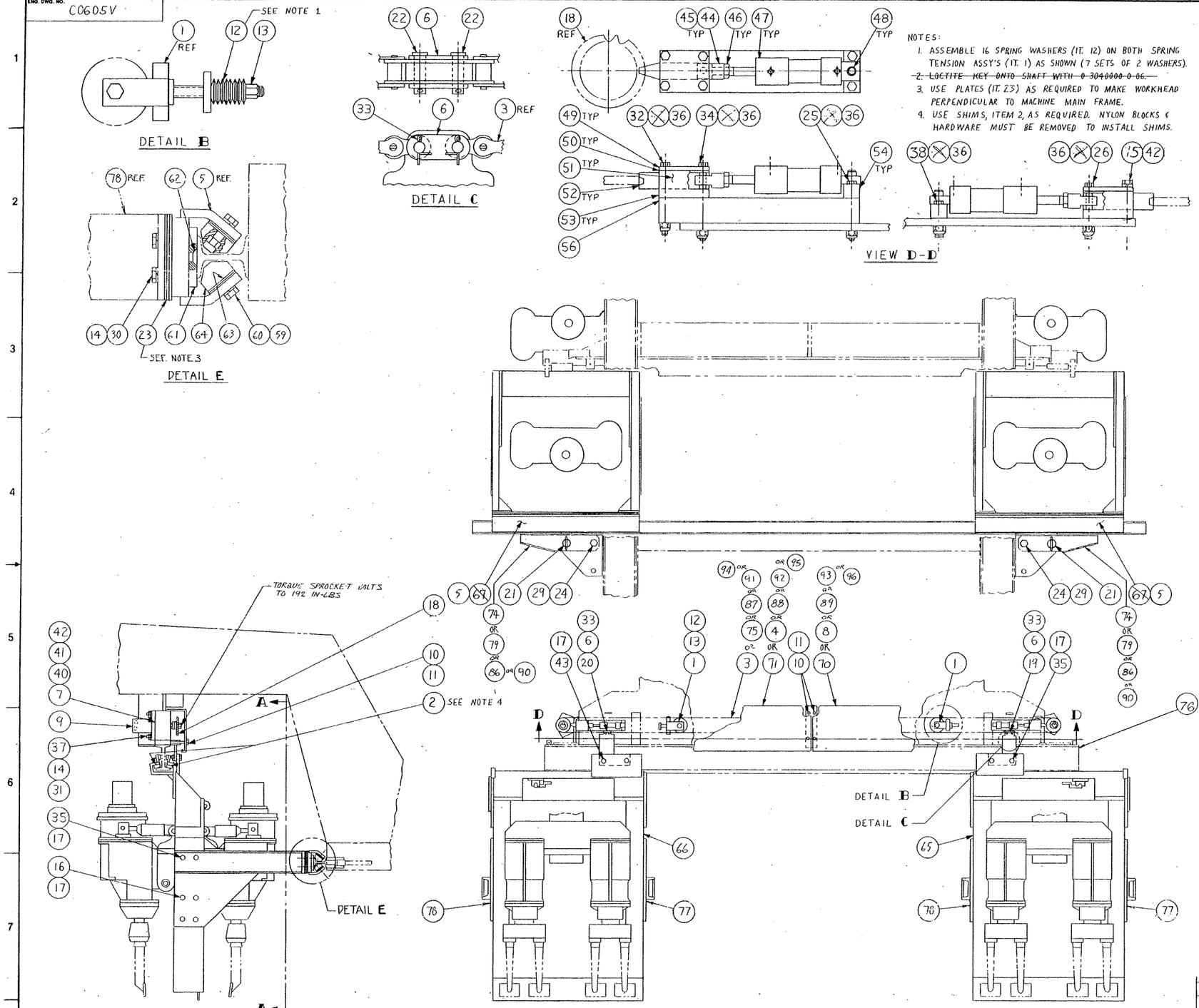

NOTES:

1. ASSEMBLE 16 SPRING WASHERS (IT. 12) ON BOTH SPRING TENSION ASSY'S (IT. 1) AS SHOWN (7 SETS OF 2 WASHERS).
2. ~~LOCTITE KEY ONTO SHAFT WITH 0-3040000-0-06.~~
3. USE PLATES (IT. 23) AS REQUIRED TO MAKE WORKHEAD PERPENDICULAR TO MACHINE MAIN FRAME.
4. USE SHIMS, ITEM 2, AS REQUIRED. NYLON BLOCKS & HARDWARE MUST BE REMOVED TO INSTALL SHIMS.

REVISIONS

NO	BY	DESCRIPTION	ZONE	DR	CK	APP	MP
2	7-9-90	NEW RELEASE		SPB			
3	9-11-90	ITS. 75, 76 ADDED		LR	DJ	MAP	
4	9-18-90	REPOSITION OF SPRING BOXES		LR	DJ		
5	9-20-90	ADDED DET. F, DELETED ITEMS 6-7 72 & 73, ADDED ITS. 77-78 & 48. ADDED TAB AC	6-7	B.B.	DJ	MPX	
9	—	NO CHANGE					
10	10-22-90	DELETED IT. 3-5, ADJUSTED DIG. H AND WORK HANGER		RTD	DJ	SBC	
11	11-14-90	DELETED IT. 1-39 & NOTE 2 19 DEC 90		MD	DJ		
12	12-12-90	PICT CHG IT-2J		SPB	LR	L	
14		NO CHANGE					

THIS SHEET FOR C0605VAB, AC, AG, & AH ≠ AJ
SEE SEPARATE PARTS LIST

FIG NO.	ITEM NO.	PART NUMBER	DESCRIPTION AND MATERIAL SIZE (REF ONLY)	QTY

DESCRIPTION (24): W.H. & TRAVERSE ASSY
DRAWN: S.P.B. DATE: 7-9-90
CHECKED: DJ DATE: 7-12-90
APPROVED: DATE:
APPROVED: DATE:
MACHINE TYPE: C254 - HSWL
TAMPER CORP.
Tamper
EXD. DWG. NO.: C0605V
SHEET 2 OF ~ CONT.

WEIGHT: LBS. — DO NOT SCALE
SIZE: A3 — 1/3 INDEX PROJECTION
LAST ITEM NO. USED

IMPLIED TOLERANCES
ALL DIMENSIONS ARE IN INCHES - TOLERANCE UNLESS OTHERWISE SPECIFIED.

NOMINAL SIZE RANGE OVER	TO	PLUS OR MINUS FRACTION	2 PLACE DECIMAL	3 PLACE DECIMAL	NOMINAL SIZE RANGE OVER	TO	PLUS OR MINUS FRACTION	2 PLACE DECIMAL	3 PLACE DECIMAL
--	1	1/64	.01	.003	6	24	1/64	.02	.005
1	6	1/32	.02	.005	24	—	1/16	.05	.010

ANGULAR DIMENSIONS PLUS OR MINUS 1 DEGREE

ALL MACHINED SURFACES TO HAVE A SURFACE FINISH OF 125 MICROINCHES UNLESS OTHERWISE SPECIFIED.

THIS DOCUMENT CONTAINS PROPRIETARY INFORMATION AND SUCH INFORMATION MAY NOT BE DISCLOSED TO OTHERS FOR ANY PURPOSE OR USED FOR MANUFACTURING PURPOSES WITHOUT THE WRITTEN PERMISSION OF TAMPER.

SCANNED
REVISION ___ OF THIS DRAWING HAS BEEN SCANNED INTO THE CAD/CAM DATA BASE.
BMS 7/20/01
INITIALS DATE

© American Blueprint of Columbus

RIGHT VIBRATOR & WORKHEAD ASSY

DWG NO. G8032WAL

ITEM	DESCRIPTION	PART NUMBER	QTY
1	FRAME, WORKHEAD	A5287VAA	1
2	VIBRATOR CARRIER	0-2100706-0-01	1
3	GUIDE ROD	0-1404016-0-01	2
4	O-RING	L40070	4
5	BUSHING	Z68287	4
6	RING RETAINING	L40072	4
7	BUSHING	Z68288-01	2
8	WIPER RING	L40525	4
9	LOWER ADJ.PLATE	0-1404015-0-01	2
10	1/2-13 X 1 1/2 CAPSCREW	A0036123	24
11	1/2 MED LOK WSHR	A0061013	24
12	PIN ROLL (1 1/2)	L40110	8
13	1 1/4-12 X 3 FULL THD HEX HD. CAPSCREW	L420984	4
14	1 1/4 HEAVY LOK WSHR	A0061021	4
15	UPPER PLATE	Z68370	2
16	GUIDE ROD PLATE	Y688545	2
17	STG POT 30" .024 10K + M12	0-3137013-0-14	1
18	1-8 HEX JAM NUTS	A0056015	4
19	1/2 PL WSHR	A0059005	4
20	1/2-13 X 2 CAPSCREW	A0036125	2
21	W H GUIDE ROD SHIM	Z68373C	2
22	SHIM WH GUIDE ROD	Z68373B	10
23	W.H. GUIDE ROD SHIM	Z68373A	6
24	WORKHEAD CYL ASSY	B5761XAA	1
25	3/4-10 X 2 1/2 CAPSCREW	A0036220	4
26	3/4 HVY LOCKWASHER	A0061024	8
27	RETAINING PLATE	0-1404046-1-01	1
29	SPACER	0-1404047-1-01	1
30	LOCKNUT	L424662	1
31	PAD, LOWER CUSHION	Y68375-01	2
32	10-24X2 1/4 RDHD MSCR CP	A0050062	6
33	#10 MED PLAIN WASHER	A0059025	12
34	ESNA NUTS	L41127	7
35	LOWER RETAINING PLATE	0-1404575-1-01	1
36	LOWER CUSHION MOUNT	0-1404574-1-01	1
37	CUSHION MOUNT	0-1404045-1-01	1
38	PIVOT SHAFT SHORT	Y68074-02	2
39	DRILLED HEX HD CAPSCREW	Z750978	8
40	WIRE SOFT BLACK	L424026	4
41	POTENTIOMETER MTG BRKT	G2801X01	1
42	SWIVEL/BRKT. ASSY	Y684448-01	2
43	U' BOLT WH	Z68133-02	1
44	3/4-10 HEX JAM NUTS	A0056012	2
45	SHOCK MOUNT	Z766673-001	2
46	3/4-10 HEX NUTS	A0055022	2
47	MANIFOLD ASSY	Y766772Y	1

RIGHT VIBRATOR & WORKHEAD ASSY

DWG NO. G8032WAL

ITEM	DESCRIPTION	PART NUMBER	QTY
48	PIN	Z68439-01	4
49	3/16X1 3/4 COTTER PIN	A0068049	8
50	PIVOT SHAFT LONG	Y684191-01	2
51	PIN	Z753164-001	2
52	3/32 X 3/4 COTTER PIN	A0068007	4
53	AIR CYLINDER	Y767203-001	1
54	90DEG. MALE PIPE	L420853	1
55	ADJUSTABLE YOKE END	L423620	1
56	5/16-18 HEX JAM NUTS	A0056003	1
57	SPRING	L410848	1
58	HOOK FOR WK/HA LOCK	0-1405505-0-01	1
59	ROLL PIN (1 3/8)	L40416	1
60	LOCK LEVER HANDLE (JRE)	0-1302117-0-01	1
61	FITTING GREASE	L26028	6
62	EYE	C6100T69	1
63	10-24 X 1 RDHD MSCR CP	A0050058	1
65	FITTING, 1/2 MALE PIPE/JIC STR.	L411376	2
66	HOSE CLAMP	L422320	4
67	1/4-20X1 1/4 HHCAPSCREW	A0036006	2
68	VIBRATOR ASSY	C0607VAA	2
69	ORDER F004606	L40237	6
70	BUMPER THREADED ROD	D8010Y01	4
71	SPACER	Z682674	16
72	3/16 X 2 COTTER PIN	A0068025	4
73	PIN CONN	Z68440-02	4
74	PLATE LOCK	Z688521	4
75	1/4-20X1/2 SOCHDSCRNLOK	A0043031	8
76	1/4-20X2.75 SOC HD C SCR	A0041057	2
77	1/4 MED PL WSHR	A0059001	6
78	HOSE SUPPORT	B3020Y01	2
79	BOSS PLUG	L424675	1
80	ELBOW ADAPTOR	L422762	1
84	AEROQUIP FITTING	L420017	8
85	SWIVEL, JIC	L411363	8
86	FITTING	L411379	8
87	WORKHEAD SUPPORT	A1176VAA	1
88	NUT, ESNA	L41157	6
89	LOCK-UP PIN	C9402Y01	1
90	SQUEEZE CYL	X768362A	4
91	5/8-11 X 1 3/4 CAPSCREW	A0036177	8
92	5/8 HEAVY LOK WSHR	A0061017	8
93	3/4-10 LOCKNUT PLATED	L41003	8
94	3/4-10 X 2 1/4 CAPSCREW	A0036219	8
95	STOP PAD ASSY	G0850YAA	2
96	REAR SLIDE ASSY	G0851YAA	1
97	FRONT SLIDE ASSY	G0852YAA	1

RIGHT VIBRATOR & WORKHEAD ASSY

DWG NO. G8032WAL

ITEM	DESCRIPTION	PART NUMBER	QTY
98	1/4-20X1 1/4 SOCHD C SCR	A0041044	4
100	PIN ROLL	L41005	1
101	COMPRESSION SPRING	Z710103	1
102	3/4 SAE WSHR	A0060018	1
109	FLOW REGULATOR	0-3335012-0-01	2
111	BLACK PIPE ELBOW	L41121	2
112	PIN-DOWEL	0-3015001-0-35	1
113	PIN-DOWEL	0-3015001-0-13	1
114	BULKHEAD FITTINGS	0-3304011-0-01	2
115	3/8 HEAVY LOK WSHR	A0061011	2
116	3/8-16 HEX NUTS	A0055012	2
117	BULKHEAD FITTINGS	0-3304011-0-03	1
118	VALVE & HOSE MTG BRKT	D6931YAB	1
119	3/8-16 X 3 3/4 CAPSCREW	A0036073	2
120	THREADED PIPE	A1438T68	2
121	BUMPER BOLT HEAD	D8009Y01	4
122	GUSSET	Z685524	2
123	ADAPTER	L420270	2
124	O-RING BOSS FTG.	0-3304028-0-35	4
125	ADAPTOR	L423023	2
126	ADAPTOR, 45 DEG.	L411532	4
127	TEE SERVICE	L40056	1
128	FTG 1/2 MP 1/4 JIC 45DEG	0-3304098-0-23	1

RIGHT VIBRATOR AND WORKHEAD ASSY
DWG NO G8032WAL

REV 0
SHEET 1 OF 2

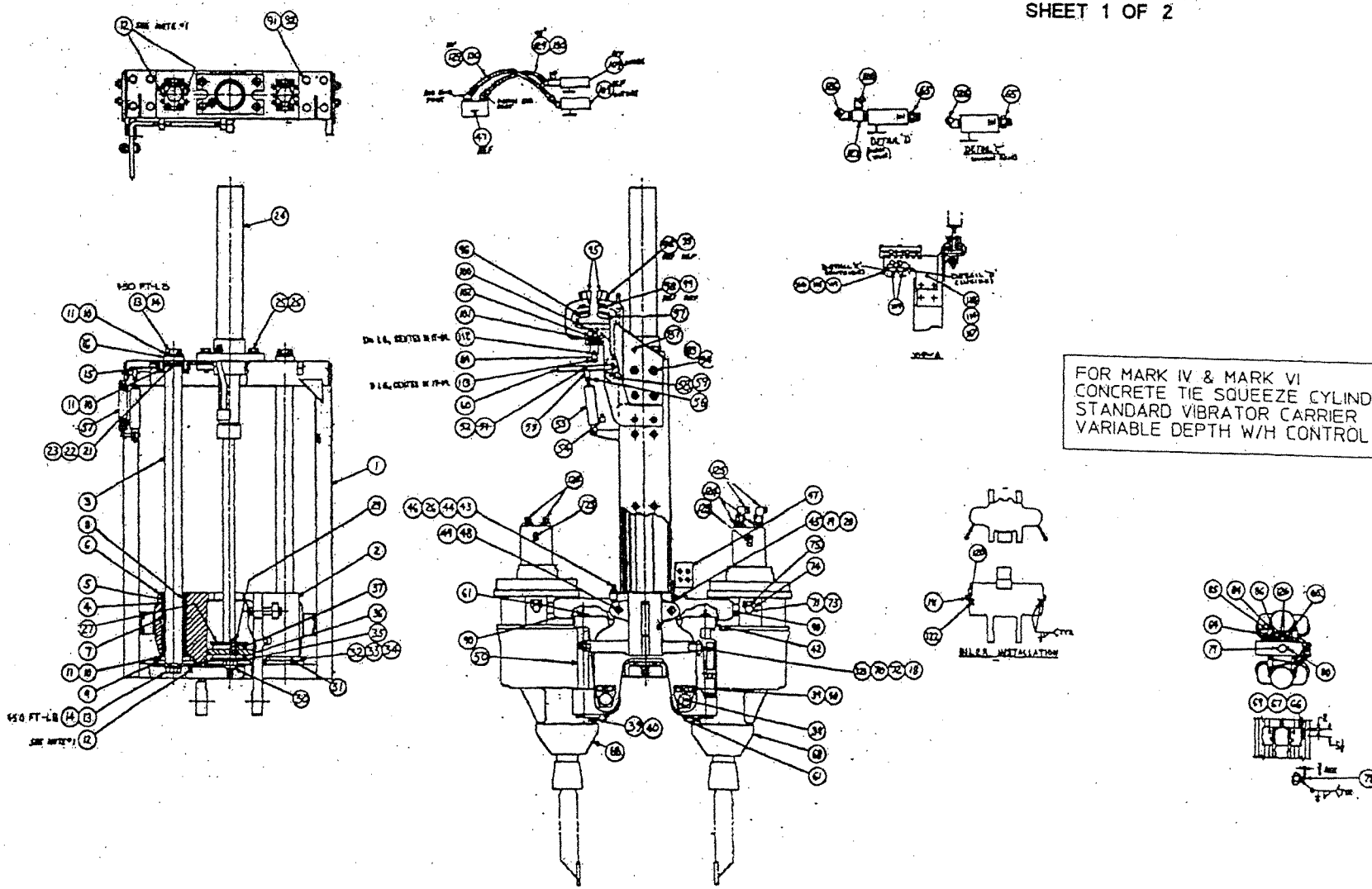

FOR MARK IV & MARK VI
CONCRETE TIE SQUEEZE CYLINDERS
STANDARD VIBRATOR CARRIER
VARIABLE DEPTH W/H CONTROL

RIGHT VIBRATOR AND WORKHEAD ASSY
DWG NO G8032WAL

REV 0
SHEET 2 OF 2

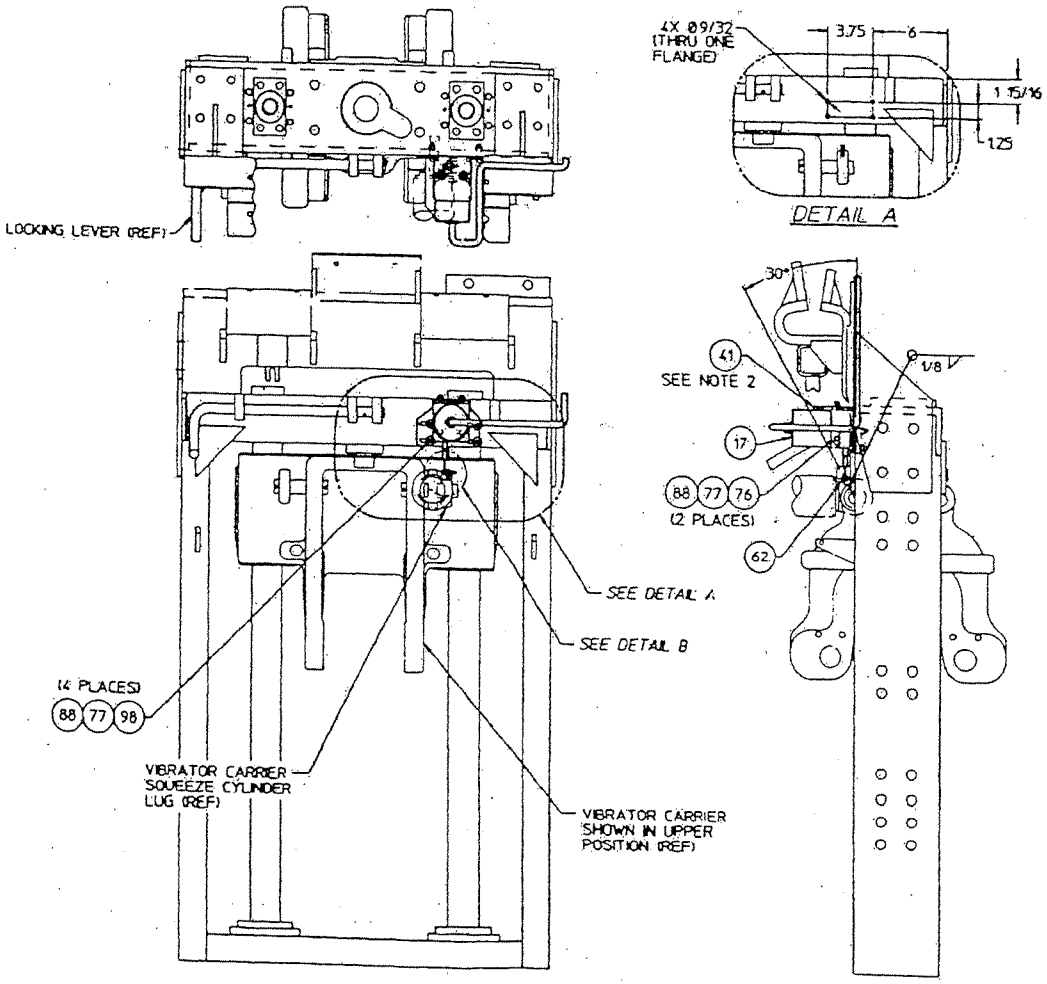

LEFT VIBRATOR & WORKHEAD ASSY

DWG NO. G8032WAM

ITEM	DESCRIPTION	PART NUMBER	QTY
1	FRAME, WORKHEAD	A5287VAA	1
2	VIBRATOR CARRIER	0-2100706-0-01	1
3	GUIDE ROD	0-1404016-0-01	2
4	O-RING	L40070	4
5	BUSHING	Z68287	4
6	RING RETAINING	L40072	4
7	BUSHING	Z68288-01	2
8	WIPER RING	L40525	4
9	LOWER ADJ.PLATE	0-1404015-0-01	2
10	1/2-13 X 1 1/2 CAPSCREW	A0036123	24
11	1/2 MED LOK WSHR	A0061013	24
12	PIN ROLL (1 1/2)	L40110	8
13	1 1/4-12 X 3 FULL THD HEX HD. CAPSCRI	L420984	4
14	1 1/4 HEAVY LOK WSHR	A0061021	4
15	UPPER PLATE	Z68370	2
16	GUIDE ROD PLATE	Y688545	2
17	STG POT 30" .024 10K + M12	0-3137013-0-14	1
18	1-8 HEX JAM NUTS	A0056015	4
19	1/2 PL WSHR	A0059005	4
20	1/2-13 X 2 CAPSCREW	A0036125	2
21	W H GUIDE ROD SHIM	Z68373C	2
22	SHIM WH GUIDE ROD	Z68373B	10
23	W.H. GUIDE ROD SHIM	Z68373A	6
24	WORKHEAD CYL ASSY	B5761XAA	1
25	3/4-10 X 2 1/2 CAPSCREW	A0036220	4
26	3/4 HVY LOCKWASHER	A0061024	8
27	RETAINING PLATE	0-1404046-1-01	1
29	SPACER	0-1404047-1-01	1
30	LOCKNUT	L424662	1
31	PAD, LOWER CUSHION	Y68375-01	2
32	10-24X2 1/4 RDHD MSCR CP	A0050062	6
33	#10 MED PLAIN WASHER	A0059025	12
34	ESNA NUTS	L41127	7
35	LOWER RETAINING PLATE	0-1404575-1-01	1
36	LOWER CUSHION MOUNT	0-1404574-1-01	1
37	CUSHION MOUNT	0-1404045-1-01	1
38	PIVOT SHAFT SHORT	Y68074-02	2
39	DRILLED HEX HD CAPSCREW	Z750978	8
40	WIRE SOFT BLACK	L424026	4
41	POTENTIOMETER MTG BRKT	G2801X01	1
42	SWIVEL/BRKT. ASSY	Y684448-01	2
43	U' BOLT WH	Z68133-02	1
44	3/4-10 HEX JAM NUTS	A0056012	2
45	SHOCK MOUNT	Z766673-001	2
46	3/4-10 HEX NUTS	A0055022	2
47	MANIFOLD ASSY	Y766772Y	1

LEFT VIBRATOR & WORKHEAD ASSY

DWG NO. G8032WAM

ITEM	DESCRIPTION	PART NUMBER	QTY
48	PIN	Z68439-01	4
49	3/16X1 3/4 COTTER PIN	A0068049	8
50	PIVOT SHAFT LONG	Y684191-01	2
51	PIN	Z753164-001	2
52	3/32 X 3/4 COTTER PIN	A0068007	4
53	AIR CYLINDER	Y767203-001	1
54	90DEG. MALE PIPE	L420853	1
55	ADJUSTABLE YOKE END	L423620	1
56	5/16-18 HEX JAM NUTS	A0056003	1
57	SPRING	L410848	1
58	HOOK FOR WK/HA LOCK	0-1405505-0-01	1
59	ROLL PIN (1 3/8)	L40416	1
60	LOCK LEVER HANDLE (JRE)	0-1302117-0-01	1
61	FITTING GREASE	L26028	6
62	EYE	C6100T69	1
63	10-24 X 1 RDHD MSCR CP	A0050058	1
65	FITTING, 1/2 MALE PIPE/JIC STR.	L411376	2
66	HOSE CLAMP	L422320	4
67	1/4-20X1 1/4 HHCAPSCREW	A0036006	2
68	VIBRATOR ASSY	C0607VAA	2
69	ORDER F004606	L40237	6
70	BUMPER THREADED ROD	D8010Y01	4
71	SPACER	Z682674	16
72	3/16 X 2 COTTER PIN	A0068025	4
73	PIN CONN	Z68440-02	4
74	PLATE LOCK	Z688521	4
75	1/4-20X1/2 SOCHDSCRNLOK	A0043031	8
76	1/4-20X2.75 SOC HD C SCR	A0041057	2
77	1/4 MED PL WSHR	A0059001	6
78	HOSE SUPPORT	B3020Y01	2
79	BOSS PLUG	L424675	1
80	ELBOW ADAPTOR	L422762	1
84	AEROQUIP FITTING	L420017	8
85	SWIVEL, JIC	L411363	8
86	FITTING	L411379	8
87	NUT, ESNA	L41157	6
88	WORKHEAD SUPPORT	A1176VAB	1
89	LOCK-UP PIN	C9402Y01	1
90	SQUEEZE CYL	X768362A	4
91	5/8-11 X 1 3/4 CAPSCREW	A0036177	8
92	5/8 HEAVY LOK WSHR	A0061017	8
93	3/4-10 LOCKNUT PLATED	L41003	8
94	3/4-10 X 2 1/4 CAPSCREW	A0036219	8
95	STOP PAD ASSY	G0850YAA	2
96	REAR SLIDE ASSY	G0851YAA	1
97	FRONT SLIDE ASSY	G0852YAA	1

LEFT VIBRATOR & WORKHEAD ASSY

DWG NO. G8032WAM

ITEM	DESCRIPTION	PART NUMBER	QTY
98	1/4-20X1 1/4 SOCHD C SCR	A0041044	4
100	PIN ROLL	L41005	1
101	COMPRESSION SPRING	Z710103	1
102	3/4 SAE WSHR	A0060018	1
109	FLOW REGULATOR	0-3335012-0-01	2
111	BLACK PIPE ELBOW	L41121	2
112	PIN-DOWEL	0-3015001-0-35	1
113	PIN-DOWEL	0-3015001-0-13	1
114	BULKHEAD FITTINGS	0-3304011-0-01	2
115	3/8 HEAVY LOK WSHR	A0061011	2
116	3/8-16 HEX NUTS	A0055012	2
117	BULKHEAD FITTINGS	0-3304011-0-03	1
118	VALVE & HOSE MTG BRKT	D6931YAA	1
119	3/8-16 X 3 3/4 CAPSCREW	A0036073	2
120	THREADED PIPE	A1438T68	2
121	BUMPER BOLT HEAD	D8009Y01	4
122	GUSSET	Z685524	2
123	ADAPTER	L420270	2
124	O-RING BOSS FTG.	0-3304028-0-35	4
125	ADAPTOR	L423023	2
126	ADAPTOR, 45 DEG.	L411532	4
127	TEE SERVICE	L40056	1
128	FTG 1/2 MP 1/4 JIC 45DEG	0-3304098-0-23	1

LEFT VIBRATOR AND WORKHEAD ASSY
DWG NO G8032WAM

REV 0
SHEET 1 OF 2

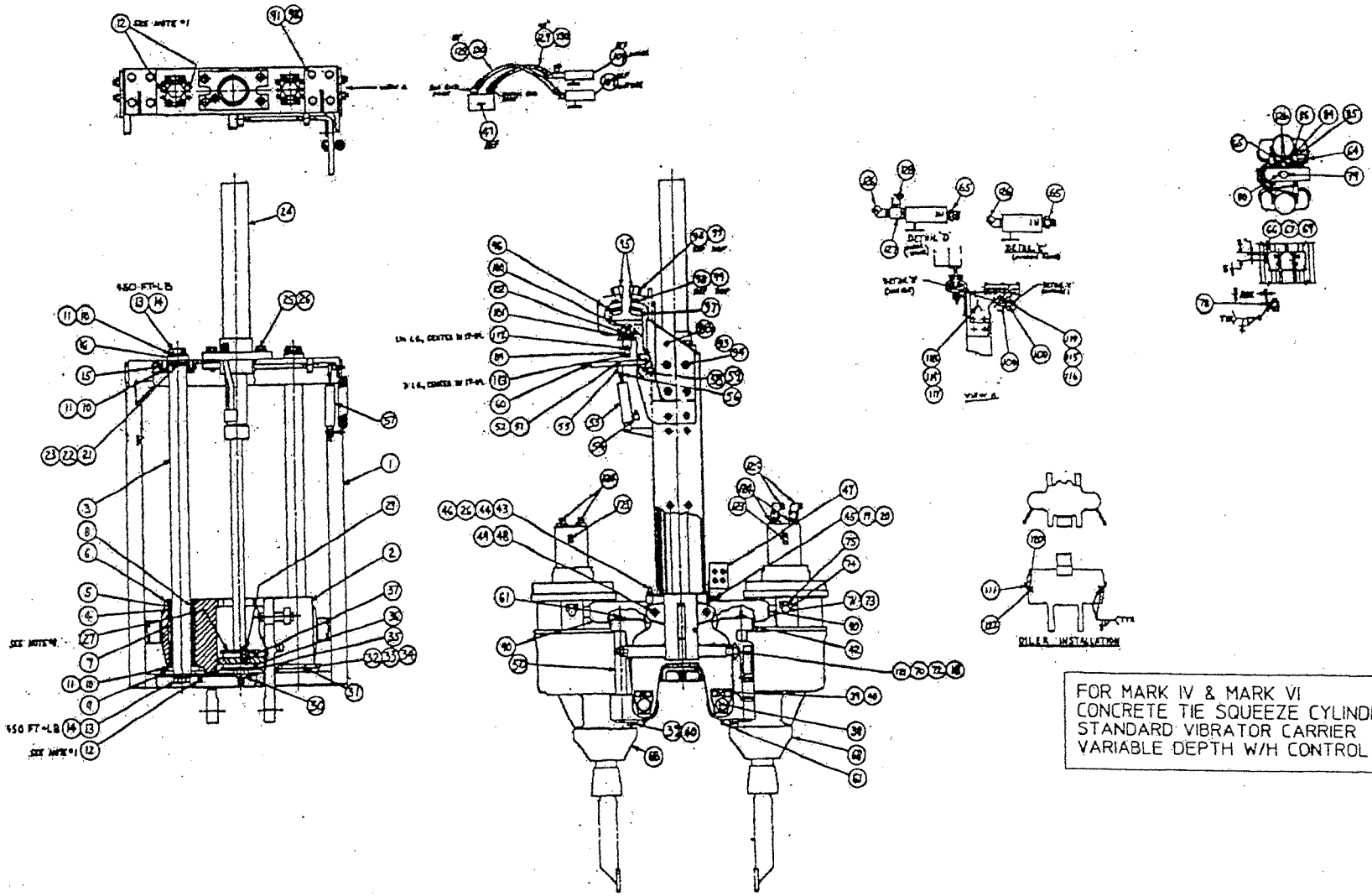

FOR MARK IV & MARK VI
CONCRETE TIE SQUEEZE CYLINDERS
STANDARD VIBRATOR CARRIER
VARIABLE DEPTH W/H CONTROL

LEFT VIBRATOR AND WORKHEAD ASSY
DWG NO G8032WAM

REV 0
SHEET 2 OF 2

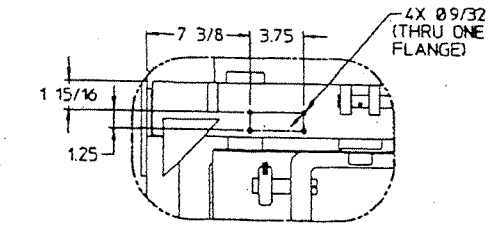

DETAIL A

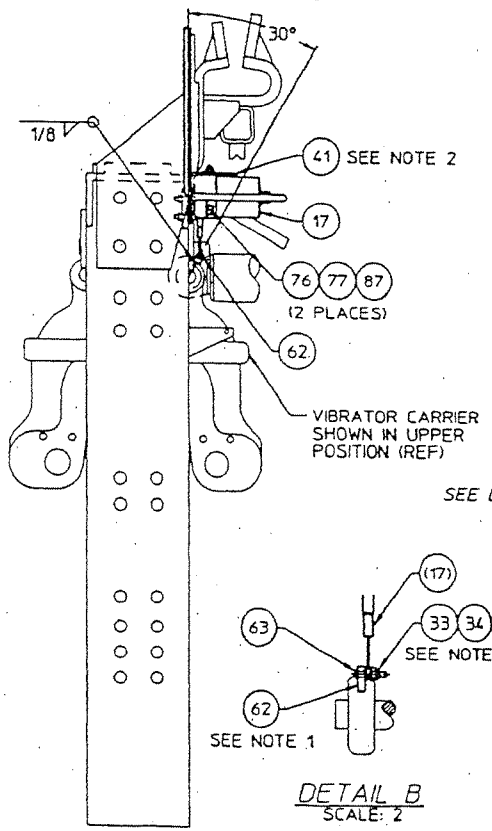

DETAIL B
SCALE: 2

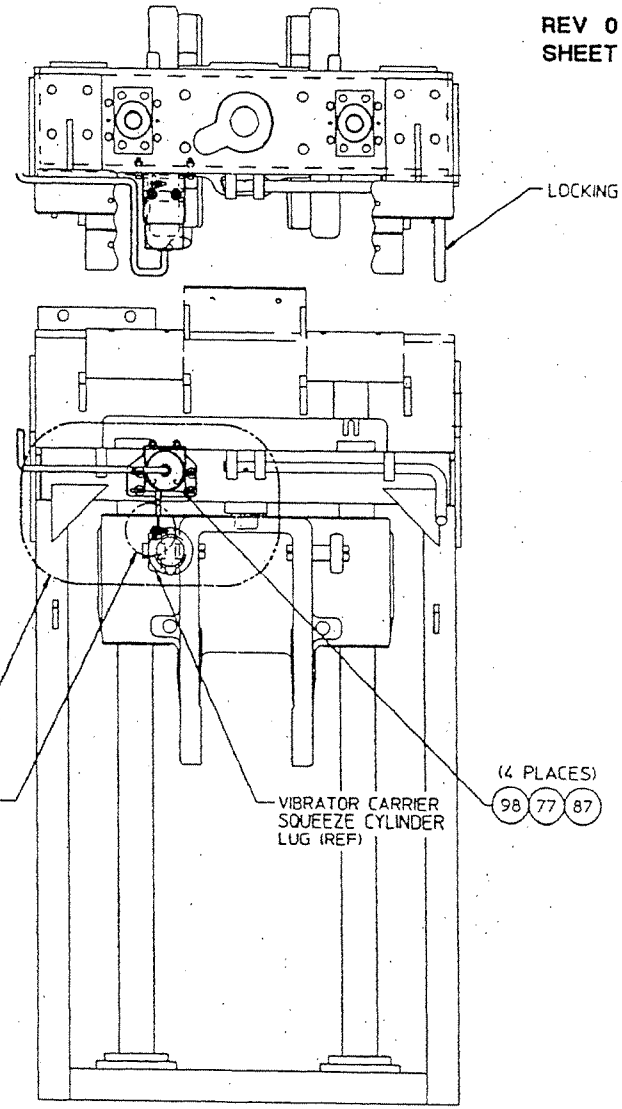

ENG.DWG.NO.
G6285WAA

REVISIONS							
NO	ER	DESCRIPTION	ZONE	DR	CK	APP	MF
1	10946 1	RELEASED					
2	11109 1	IT 7 WAS A5443Y06 5 MAY 98		AO	HW	WHC	

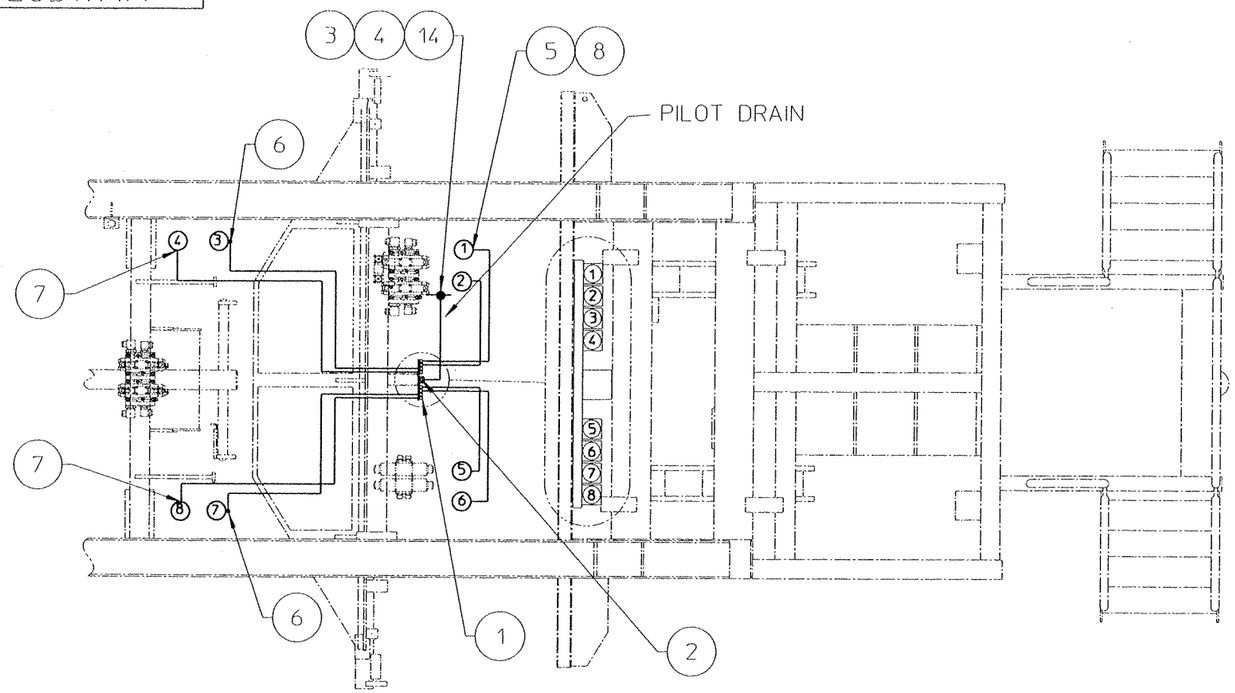

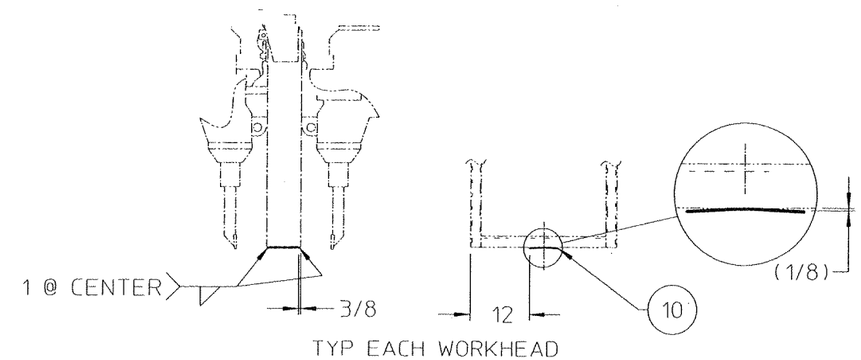

TYP EACH WORKHEAD

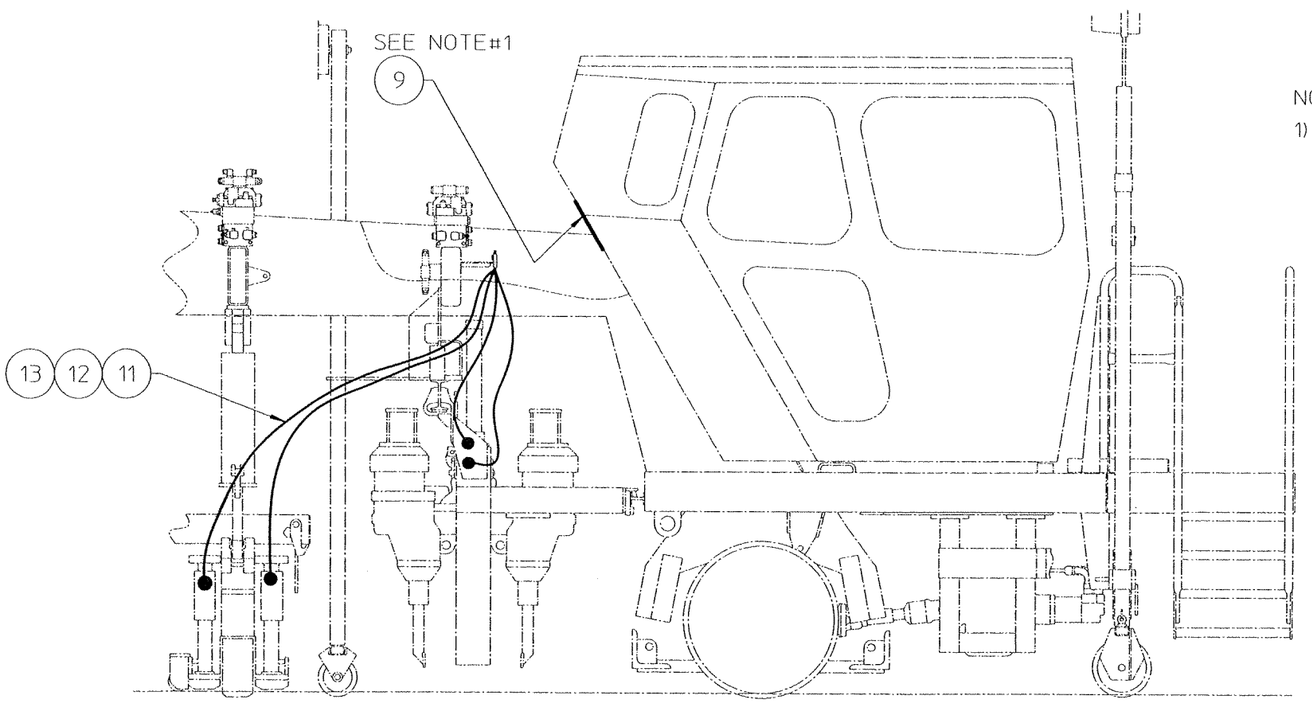

NOTES:

1) CENTER DECAL HORIZONTALLY ON FRONT OF CAB ABOUT MIDWAY BETWEEN DRIP GUARD AND BEND

FIG NO.	ITEM NO.	PART NUMBER	DESCRIPTION AND MATERIAL SIZE (REF.ONLY)	QTY
	14	0-3304057-0-08	FTG 3/8/SW RUN TEE	1
	13	L420492	TIE WRAP 6"	20
	12	L420493	TIE WRAP 14"	6
	11	L423607	TUBING 1/4 OD	200
	10	A7774Y01	OIL DEFLECTOR	2
	9	G6279Y01	OILER DECAL	1
	8	L41121	FTG 1/4 FP-FP ELBOW 90°	4
	7	A5443Y03	FTG 1/4 TUBE 1/8 MPTF ST	2
	6	A5443Y04	FTG 1/4 TUBE 1/8 MPTF 90	2
	5	A5443Y10	FTG 1/4 TUBE 1/4 MP	4
	4	L411366	HOSE END 1/4 JIC SW	2
	3	L423104	HOSE 1/4 MP	2
	2	L420002	FTG 1/4 MP JIC 90	1
	1	B1657Y08	NEEDLE VALVE MANIFOLD	1

PLOT SCALE -16

IMPLIED TOLERANCES
ALL DIMENSIONS ARE IN INCHES-TOLERANCE UNLESS OTHERWISE SPECIFIED

NOMINAL SIZE RANGE		PLUS OR MINUS			NOMINAL SIZE RANGE		PLUS OR MINUS		
OVER	TO	FRACTION	2 PLACE DECIMAL	3 PLACE DECIMAL	OVER	TO	FRACTION	2 PLACE DECIMAL	3 PLACE DECIMAL
-	1	1/64	.01	.003	6	24	3/64	.03	.008
1	6	1/32	.02	.005	24	-	1/16	.05	.010

ANGULAR DIMENSIONS PLUS OR MINUS 1 DEGREE

ALL MACHINED SURFACES TO HAVE A SURFACE FINISH OF 125 MICROINCHES UNLESS OTHERWISE SPECIFIED.

WELDING SPECIFICATION

UNLESS OTHERWISE SPECIFIED ALL WELDS SHOULD ADHERE TO FAIRMONT TAMPER WELDING SPECIFICATION NO. 101

WEIGHT lbs

3rd ANGLE PROJECTION

DO NOT SCALE

SHEET 1 CONT. ON –

DESCRIPTION 124
AUTO OILER INSTL

DRAWN A.OUZTS	DATE 27 MAR 98	MACHINE TYPE MK VI	
CHECKED DGV	DATE 4-2-98		
APP-ENG A.LINDSEY	DATE 4/1/98		
APP-MFG	DATE		
LAST ECR 11109 .1	CHECKED hwj	ENG DWG NO. G6285WAA	
	DATE 08-May-98		

Fairmont Tamper
2401 Edward Road-Box 20
Cayce-West Columbia,
South Carolina 29171-0020
(803) 822-9160

THIS DOCUMENT CONTAINS PROPRIETARY INFORMATION AND SUCH INFORMATION MAY NOT BE DISCLOSED TO OTHERS FOR ANY PURPOSE OR USED FOR MANUFACTURING PURPOSES WITHOUT THE WRITTEN PERMISSION OF FAIRMONT TAMPER.

TAMPING TOOLS

SHEET 1 OF 2

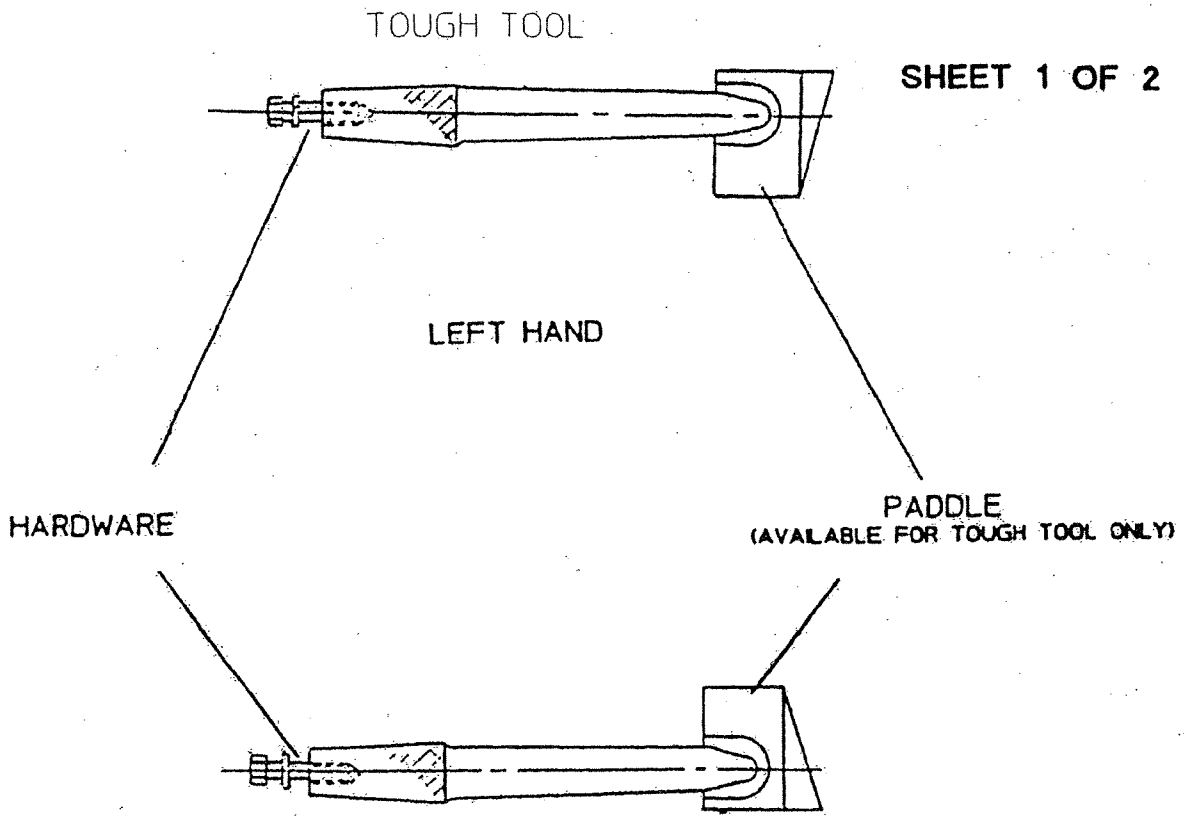

TOUGH TOOL	CARBIDE (SUPER) TOOL
R/H TOUGH TOOL ASSY - A9602XAG	R/H CARBIDE TOOL ASSY - H5532WAA
L/H TOUGH TOOL ASSY - A9602XAM	L/H CARBIDE TOOL ASSY - H5532WAB
TOUGH TOOL PADDLE - B9526X01	
TOUGH TOOL KIT (16 TAMPING TOOLS) - P753281Y	CARBIDE TOOL KIT (16 TAMPING TOOLS) - H5549WAA SEE SHEET 2

HARDWARE ITEMS	
BOLT	A0038022
SQUARE WASHER	A8236Y01
LOCK WASHER	A0061017

CARBIDE SUPER TOOL

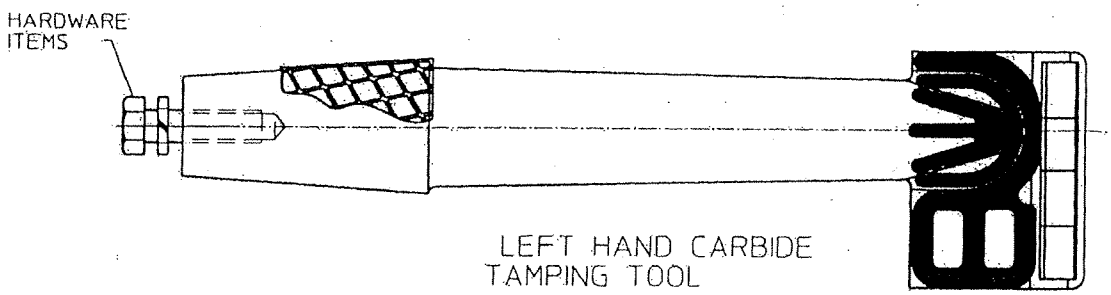

LEFT HAND CARBIDE
TAMPING TOOL

DO NOT WELD ON CARBIDE PLATES

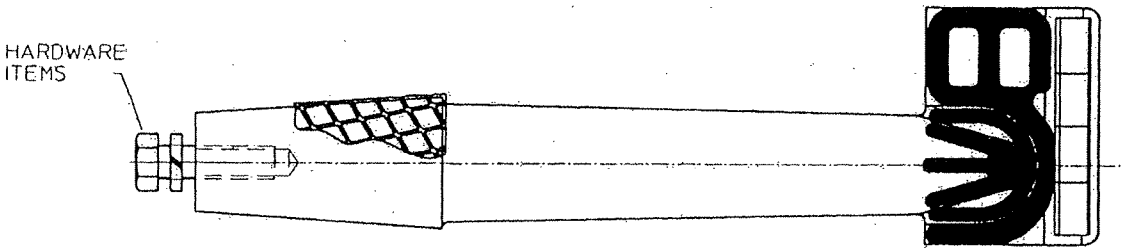

RIGHT HAND CARBIDE
TAMPING TOOL

PARTS LIST

ITEM NO	PART NUMBER	DESCRIPTION	ASSEMBLY IDENTIFIER AA	AB	AC	AD								
			QUANTITY											
1	0-2200082-0-01	VIBRATOR HOUSING ASSY	1	1	1	0								
2	W682436	VIBRATOR HOUSING COVER	1	1	1	1								
3	W681200	BEARING SLEEVE	2	2	2	2								
4	W684189	VIBRATOR SHAFT, LONG	1	0	0	1								
5	W684188	VIBRATOR SHAFT, SHORT	1	0	0	1								
6	0-3010037-0-01	WOODRUFF KEY #807	2	2	2	2								
7	A3476Y01	LOCKNUT	2	2	2	2								
8	W68378-02	IMPELLER HOUSING	1	1	1	1								
~~9~~	~~C2261WAA~~	~~HYDR MOTOR & MOUNT ASSY~~	~~1~~	~~1~~	~~1~~									
10	A3476Y03	LOCKNUT	2	2	2	2								
11	X68308-01	ECCENTRIC CONN. ROD	2	2	2	2								
12	Y68313-01	VIBRATOR PIN	2	2	2	2								
13	X688056	VIBR. FORK LINK ASSY	2	2	2	2								
14	0-1303686-0-01	SHIELD	1	1	1	1								
15	A0062029	3/8-16x3/4 S.H. CUP S.S.	3	3	3	3								
16	Z68053	STOP PLATE	2	2	2	2								
17	Z68337-01	UPPER BEARING SPACER	2	2	2	2								
18	Z68323-01	LOWER BEARING SPACER	2	2	2	2								
19	0-1305995-0-01	COUPLING SPACER	1	1	1	1								
20	0-1201169-0-01	ECCENTRIC SHAFT, FULL AMP	1	1	0	1								
21	X682452	TOP BEARING COVER	1	1	1	1								
22	Z68338-01	VIBRATOR SPACER RING	1	1	1	1								
23	Z682451	VIBR. TOP SPACER RING	1	1	1	1								
24	L410180	NEEDLE BEARING O.R.	2	2	2	2								
25	L41785	NEEDLE BEARING I.R.	2	2	2	2								
26	X681042	VIBR. COVER PL. GASKET	1	1	1	1								
27	Y682459	TOP BRG. HSG. GASKET	1	1	1	1								
28	Z682461	IMPELLER HSG. GASKET	1	1	1	1								
29	L40552	SPERICAL ROLLER BRG.	2	2	2	2								
30	L40559	SPERICAL ROLLER BRG.	1	1	1	1								
31	L40732	CYLINDRICAL ROLLER BRG.	1	1	1	1								
32	L410181	NEEDLE BEARING O.R.	2	2	2	2								
33	L410182	NEEDLE BEARING I.R.	2	2	2	2								
			MK IV, FULL AMPLITUDE	S.AFRICAN TOOLS FULL AMPLITUDE	S.AFRICAN TOOLS 2/3 AMPLITUDE	CZECH MK IV DOUBLE TIE								

REVISIONS

NO	ER	DESCRIPTION	DR	CK	APP	MF
1	5121.63	NEW RELEASE	CJW			
2		NO CHANGE				
3	5121.128	IT.9 WAS C0688WAA	FCH			
4	6208.1	DELETED IT. 9. ALL TABS	DAS	DGV	AML	
8		NO CHANGE				

ASSEMBLY DESCRIPTION

ER	5288.6	5674.2	7332
DR	RJM	BB	AO 27 SEP 95
CK	DV	DGV	
APP		AML	
MF			

Fairmont

2401 Edmund Road-Box 20

DWG NO C0607V
SHEET 1
CONT ON 2
DESCRIPTION (24) VIBRATOR ASSY
DRAWN C.J.WOLF
DATE 5-11-90
CHECKED D.V
DATE 5/24/90
APP A.D.
DATE 5/23/90
APP
DATE

SHEET 1
CONT ON 2
LAST EDR 8979.1
CHECKED
EDD
DATE 29-SEP-99
DWG NO C0607V

PARTS LIST

ITEM NO	PART NUMBER	DESCRIPTION	AA	AB	AC	AD
			QUANTITY			
34	L41055	SINGLE THRUST BALL BRG	2	2	2	2
35	L40551	SINGLE THRUST BALL BRG	2	2	2	2
36	L41057	OIL SEAL	1	1	1	1
37	L40550	OIL SEAL	2	2	2	2
38	0-3381010-0-02	OIL FILLER & AIR FILTER	1	1	1	1
39	L40450	RETAINING RING	2	2	2	2
40	L40885	RETAINING RING	2	2	2	2
41	L41058	RETAINING RING	2	2	2	2
42	L41059	RETAINING RING	1	1	1	1
43	L40522	O-RING	2	2	2	2
44	A0061009	5/16 LKWSHR	9	9	9	9
45	A0036032	5/16-18x3/4 H/H CPSCR	9	9	9	9
46	0-1303949-0-01	SHROUD	1	1	1	1
47	A0036002	1/4-20x5/8 H/H CPSCR	4	4	4	4
48	L40567	OIL GAUGE	1	1	1	1
49	L40564	ROLL PIN	2	2	2	2
50	L41068	SWAGELOCK MALE CONN.	3	3	3	3
51	L41069	SWAGELOCK MALE ELBOW	1	1	1	1
52	L41070	PIPE BUSHING	2	2	2	2
53	L410945	NYLON TUBING (FT)	2.2	2.2	2.2	2.2
54	Z687027	VIBRATOR PUMP SEAL	1	1	1	1
55	A0041126	1/2-13x1 1/4 SOC HD SCR	12	12	12	12
56	A0041145	1/2-20x1 1/4 SOC HD SCR	8	8	8	8
57	A0036126	1/2-13x2 1/4 H/H CPSCR	16	16	16	16
~~58~~	~~TZ767816-004~~	~~HEX HD CAPSCREW~~	~~6~~	~~6~~	~~6~~	~~6~~
59	A0041089	3/8-16x1 1/4 SOC HD SCR	6	6	6	6
60	A0041088	3/8-16x1" SOC HD SCR	6	6	6	6
61	A0036065	3/8-16x1 1/4 H/H CPSCR	22	22	22	22
62	A0049001	#10-24x3/8 FILLISTER SCR	6	6	6	6
63	L41075	SQ HD MAGNETIC PLUG	2	2	2	2
64	L420110	HEX HEAD PLUG	2	2	2	2
65	0-3304080-0-02	HEX HEAD PLUG	2	2	2	2
66	L40767	NUT	16	16	16	16
			MK IV, FULL AMPLITUDE	SAFRICAN TOOLS FULL AMPLITUDE	SAFRICAN TOOLS 2/3 AMPLITUDE	CZECH MK IV DOUBLE TIE

REVISIONS

NO	ER	DESCRIPTION	DR	CK	APP	MF
1	512163	NEW RELEASE	CJW			
8	12302	DEL IT 58.	PJG			

ASSEMBLY DESCRIPTION

ER	5288.6	5674.2	7332											
DR		BB	AO 23-SEP-95											
CK		DGV												
APP		AML												
MF														

Fairmont

DWG NO C0607V
SHEET 2
CONT ON 3
DESCRIPTION (24) VIBRATOR ASSY
DRAWN CJWOLF
DATE 5-11-90
CHECKED D.V.
DATE
APP A.D.
DATE 5/23/90
APP
DATE

SHEET 2
CONT ON 3
LAST ECR 18979.1
CHECKED JGO
DATE 29-SEP-95
DWG NO C0607V

PARTS LIST

ITEM NO	PART NUMBER	DESCRIPTION	AA	AB	AC	AD
			QUANTITY			
67	Z683565	GASKET	1	1	1	1
68	A0061010	3/8 MED LKWSHR	34	34	34	34
69	A0061008	1/4 MED LKWSHR	4	4	4	4
70	Y683564	LUBRICATION TEE	1	1	1	1
71	Z753210-003	KEY	2	2	2	2
72	C1049WAB	VIBRATOR SHAFT LONG	0	1	1	0
73	C1049WAA	VIBRATOR SHAFT SHORT	0	1	1	0
74	0-1201116-0-01	ECCENTRIC SHAFT, 2/3 AMP	0	0	1	0
75	A0036153	1/2-20x1 1/2 HHCS	2	2	2	2
76	A0061013	1/2 LOCK WASHER	2	2	2	2
77	0-3321014-0-04	HYDRAULIC MOTOR	1	1	1	1
78	A0041083	3/8-16x2 1/2 SHCS	6	6	6	6
79	L40387	3/8-16 ESNA NUT	6	6	6	6
80	C2307VAA	ADAPTER WELDMENT	1	1	1	1
81	A0041058	1/4-20x1 3/4 SHCS	3	3	3	3
82	0-3015006-0-24	1/8x3/8 LG. ROLL PIN	1	1	1	1
83	C2339Y01	FAN BLADE MODIFICATION	1	1	1	1
~~84~~	~~C9824Y01~~	~~TAPER-LOCK BUSHING~~	~~1~~	~~1~~	~~1~~	
~~85~~	~~C9823Y01~~	~~COUPLING FLANGE~~	~~2~~	~~2~~	~~2~~	
~~86~~	~~C2335Y01~~	~~COUPLING FLANGE REWORK~~	~~1~~	~~1~~	~~1~~	
~~87~~	~~C2336Y01~~	~~COUPLING FLANGE REWORK~~	~~1~~	~~1~~	~~1~~	
~~88~~	~~C9834Y01~~	~~FLEXIBLE ELEMENT~~	~~2~~	~~2~~	~~2~~	
~~89~~	~~D0838Y01~~	~~BUSHING REWORK~~	~~1~~	~~1~~	~~1~~	
90	D5288Y01	FLEXIBLE COUPLING ASSY.	1	1	1	1
91	0-2200082-0-02	VIBRATOR HSG ASSY	0	0	0	1
92	G2814X01	LIFT BRACKET	2	0	0	0
93	A0036067	3/8-16 X 1 3/4 H/H CPSCR	4	0	0	0

DWG NO C0607V
SHEET 3
CONT ON —
DESCRIPTION (24) VIBRATOR ASSY
DRAWN C.J.WOLF
DATE 5-11-90
CHECKED D.V
DATE
APP A.D.
DATE 5/23/90
APP
DATE

REVISIONS

NO	ER	DESCRIPTION	DR	CK	APP	MF
1	5121.63	NEW RELEASE	CJW			
2	5288.11	ADDED IT'S 72 & 73	SPB	D.V	RJM	
4	6208.1	ADDED IT'S. 75-89, ALL TABS	DAS	D.V	AML	
5	6208.3	IT. 89 WAS C9825Y01	DAS	D.V	AML	
6	7182.1	DELETED IT'S.84-89 ALL TABS. ADDED IT. 90 ALL TABS.	MLT	DGV	AD	
7	8979.1	ADDED IT'S 92 & 93	VTP	DGV	AD	
8	12302.1	IT-78 WAS A0036069 & QTY OF IT-68 WAS 40 ALL TABS.	PJG			

SHEET 3 CONT ON —
LAST ECR 8979.1
CHECKED DATE 29-Sep-93
DWG NO C0607V

	MK IV. FULL AMPLITUDE	S. AFRICAN TOOLS FULL AMPLITUDE	S. AFRICAN TOOLS 2/3 AMPLITUDE	CZECH MK IV DOUBLE TIE
ER	5288.6	5674.2	BB	7332
DR				AO 27 SEP 93
CK			DGV	
APP			AML	
MF				

ASSEMBLY DESCRIPTION

Fairmont Tamper™
2401 Edmund Road-Box 20
Cayce-West Columbia,
South Carolina 29171-0020
(803) 822-9160

Tamper	TITLE VIBRATOR ASS'Y		DWG. NO. C0607V
LOCATION W. CO. L.	MADE FOR		DWG. NO. SUFFIX AND QUANTITY
LOC. NO. / ITEM NO.	PART/DWG. NO.	LEG. NO.	DESCRIPTION AND/OR MATERIAL REQ.
			SEPARATE

SHT 1 COUT. 2

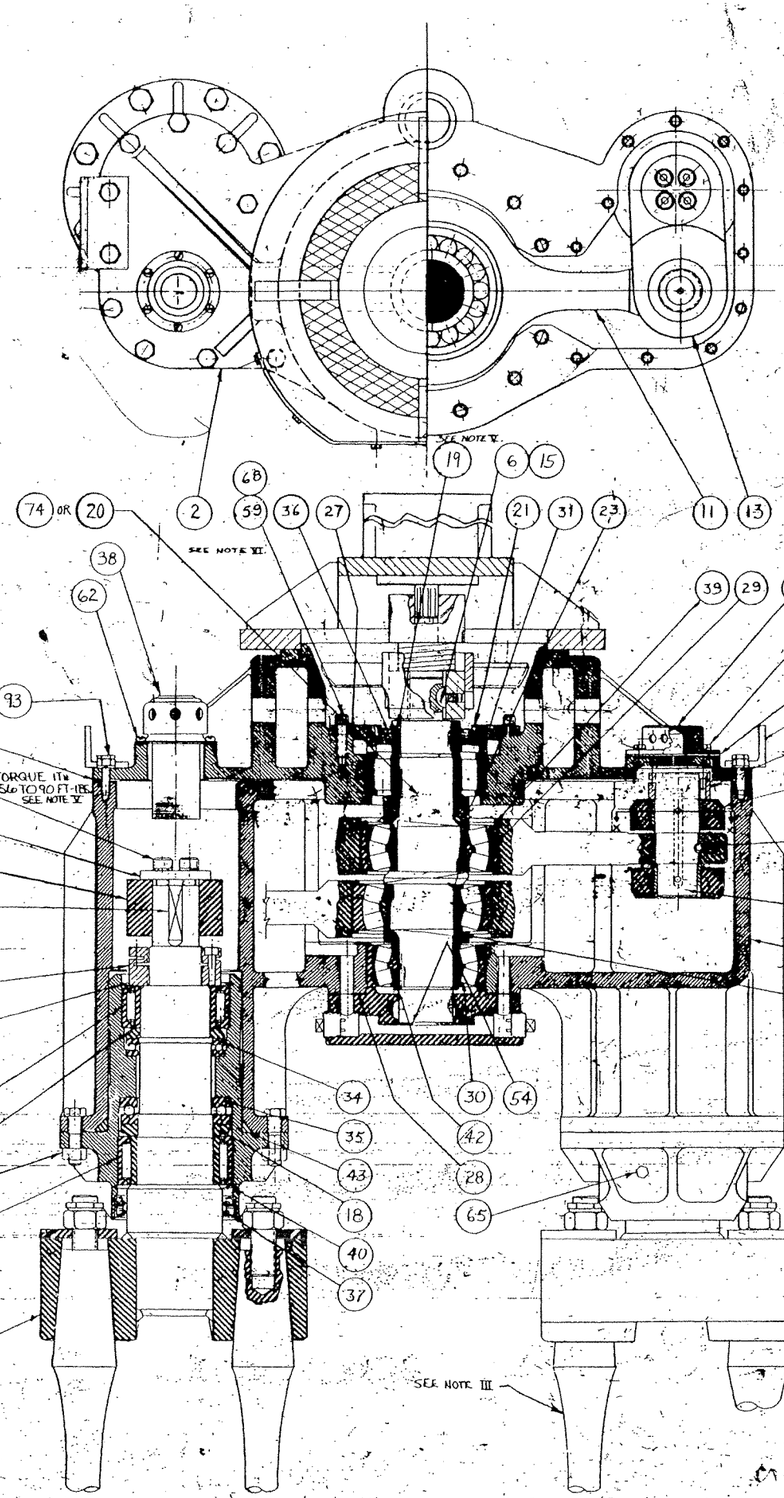

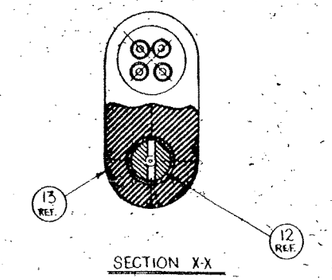

SECTION X-X

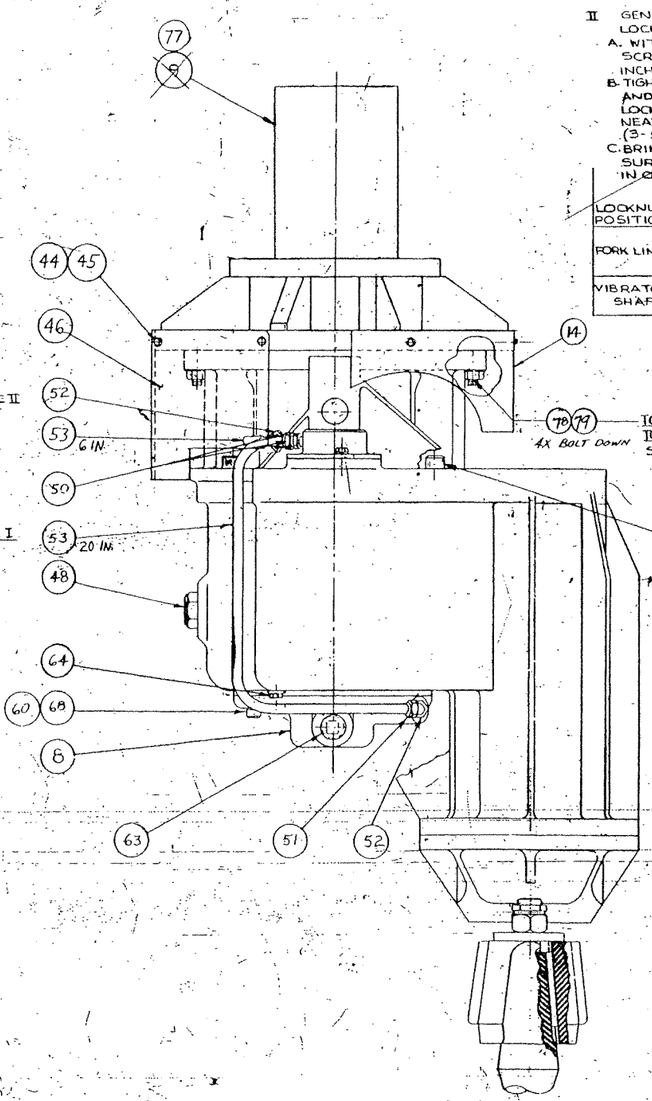

II GENERAL INSTRUCTIONS FOR FITTING LOCKNUTS:

A. WITH CLAMPING SCREWS LOOSENED, SCREW LOCKNUT ONTO SHAFT W/THIN 1/4 INCH OF SEATING SURFACE.

B. TIGHTEN CLAMPING SCREWS UNIFORMLY AND IN CROSSWISE FASHION WHILE TURNING LOCKNUT UNTIL A SNUG FIT INDICATES NEAR ELIMINATION OF THREAD CLEARANCE (3-5 LBS-FT TORQUE).

C. BRING LOCKNUT DOWN TO SEATING SURFACE AND ADJUST CLAMPING SCREWS IN CROSSWISE FASHION TO VALUES SHOWN.

LOCKNUT POSITION	LOCKNUT TORQUE	CLAMP SCREW TORQUE
FORK LINK	TIGHTEN TO ELIMINATE PLAY IN CONNECTING ROD. BACK OFF 1/4 TURN	25 LBS-IN.
VIBRATOR SHAFT	PRE-LOAD THRUST BEARINGS TO 48 LBS IN DRAG	40 LBS-IN.

I: 3/8 DRILL THRU ITEMS 11 (ECCENTRIC CONNECTING ROD) & 12 (VIBRATOR PIN) AT ASS'Y (2 PLACES) LOCATE HOLE FROM 1/8 DIA HOLE PREDRILLED IN CONN. ROD.

III: SEE P7532B1 FOR NEW TAMPING TOOL, ITS.

IV: IT IS IMPORTANT THAT ONLY GRADE 8 SOC HD CAPSCREWS, 2½ LONG, BE USED HERE.

V: ADD LOCTITE #0-3040000-0-07.

VI: ADJUST HEIGHT OF FAN TO ALLOW APPROX 1/16 CLEARANCE BETWEEN FAN AND HOUSING COVER ITS.

VII: FOR CONNECTING ROD KIT SEE V68336-02C
FOR SHORT VIBRATOR SHAFT KIT SEE V68336-02S
FOR LONG VIBRATOR SHAFT KIT SEE V68336-02L

SHEET 1 OF 2

8	7/10/81	EF 78 NAS 58-1-79 AMS 6210-81-1/4 OR CW
7	8/9/79	ADDED ITEMS 77,173
2	2/21/77	ADDED ITEM 77,173
1	2/1/62	NEW RELEASE

"THIS DOCUMENT CONTAINS PROPRIETARY INFORMATION. IT MAY NOT BE DISCLOSED TO OTHERS OR USED FOR MANUFACTURING PURPOSES OR REPRODUCED WITHOUT THE WRITTEN PERMISSION OF TAMPER."

DRAWN BY C.J. WOLF | CHECKED BY | DWG. NO. C0607V

SCANNED
REVISION ____ OF THIS DRAWING HAS BEEN SCANNED INTO THE CADCAM DATA BASE
INITIALS ____ DATE ____

ENG.DWG.NO. C0607V

REVISIONS							
NO	ER	DESCRIPTION	ZONE	DR	CK	APP'D	MF
C	6-28-01	ADDED SHEET 2		DAS		AML	
B	7-10-01	ADDED IT. 90. CH. INST. NOTES		MLT	DGV	AD	
B	12-3-02	ADDED NOTE @ IT-78 & 79.		PJG			

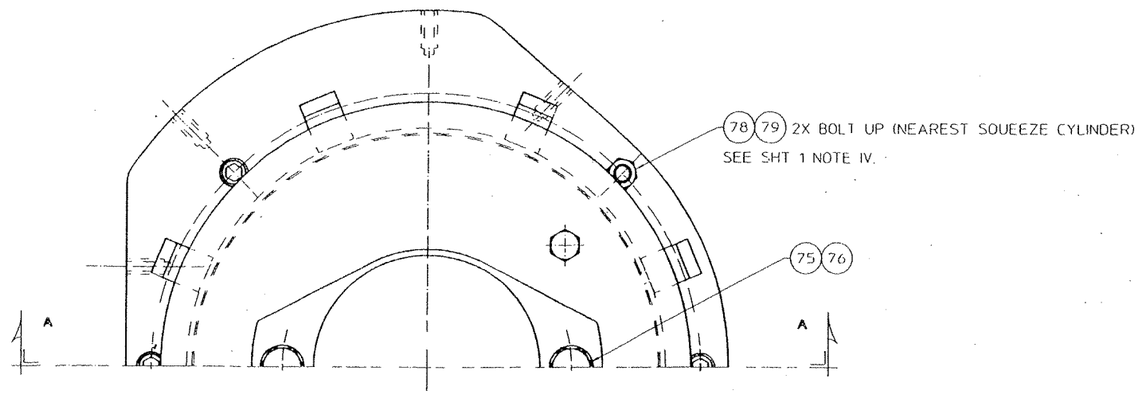

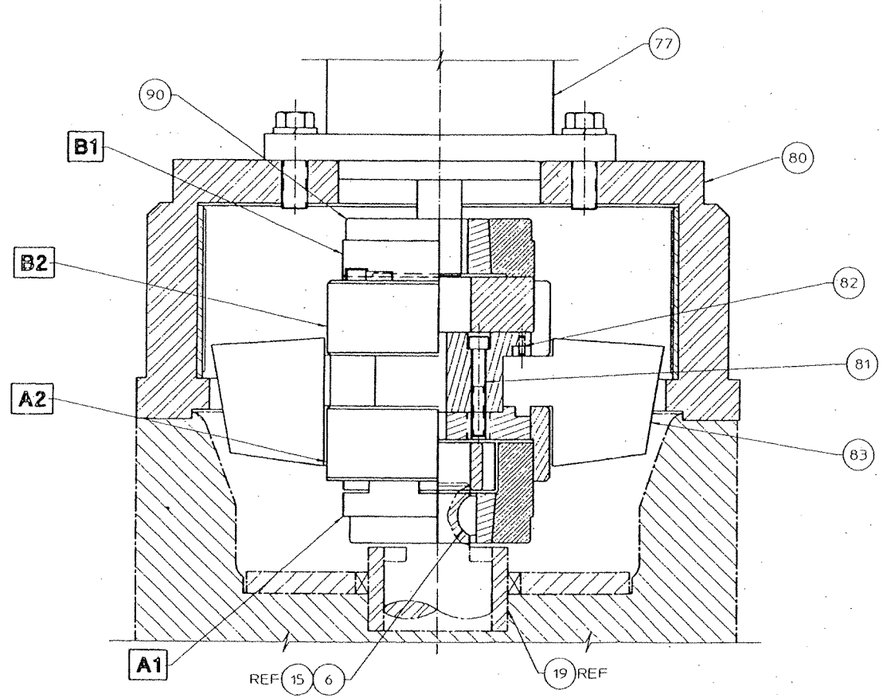

SECTION "A-A"

INSTALLATION PROCEDURES :

1) FIT ROLL PIN, ITEM "82", FLUSH WITH ELEMENT SIDE OF COUPLING HALF, "B2", AND ASSEMBLE FAN BLADES, ITEM "83" BETWEEN COUPLING HALVES, "A2" AND "B2", WITH LOCTITE AT SCREWS, ITEM "81". (SCREWS MUST NOT PROJECT THROUGH COUPLING HALF)
2) INSTALL COUPLING HALF, "A1", FLUSH AGAINST COUPLING SPACER, ITEM "19".
3) BOLT THE HYDRAULIC MOTOR, ITEM "77", TO ADAPTER, ITEM "80", BEFORE INSTALLING COUPLING HALF, "B1" (WITH BUSHING) TO BE FLUSH WITH THE END OF THE MOTOR SHAFT.
4) INSTALL FLEXIBLE ELEMENTS, AND THE FAN ASSEMBLY (NOTE 1).
5) BEFORE INSTALLING AIR SHROUDS, CHECK FOR COUPLING END FLOAT: 0.030 - 0.050 (ADJUST PROJECTION OF MOTOR SHAFT THROUGH BUSHING, IF REQUIRED)
6) 2 EACH 3/8-16x5/8 SHSS FURNISHED WITH TAPER LOCK BUSHING.

ORIGINAL

PLOT SCALE 1

FIG NO	ITEM NO	PART NUMBER	DESCRIPTION AND MATERIAL SIZE (REF ONLY)	QTY
			SEE SEPARATE PARTS LIST	

IMPLIED TOLERANCES
ALL DIMENSIONS ARE IN INCHES-TOLERANCE UNLESS OTHERWISE SPECIFIED

NOMINAL SIZE RANGE		PLUS OR MINUS			NOMINAL SIZE RANGE		PLUS OR MINUS		
OVER	TO	FRACTION	2 PLACE DECIMAL	3 PLACE DECIMAL	OVER	TO	FRACTION	2 PLACE DECIMAL	3 PLACE DECIMAL
-	1	1/64	.01	.003	6	24	1/32	.03	.006
1	6	1/32	.02	.005	24	-	1/16	.05	.010

ANGULAR DIMENSIONS PLUS OR MINUS 1 DEGREE

ALL MACHINED SURFACES TO HAVE A SURFACE FINISH OF 125 MICROINCHES UNLESS OTHERWISE SPECIFIED.

WELDING SPECIFICATION

UNLESS OTHERWISE SPECIFIED ALL WELDS SHOULD ADHERE TO FAIRMONT TAMPER WELDING SPECIFICATION NO. 101

DO NOT SCALE

DESIGNING: VIBRATOR ASSY

DRAWN	DAS	DATE 4/16/93	PRODUCT TYPE: MARK IV
CHECKED	DGV	DATE 4/23/93	Fairmont Tamper
APPROVED	AML	DATE 4/19/93	
CONTROL		DATE	

LAST USE 8979 1 | CREATED C-1-01 27-Jun-97 | NUMBER C0607V

SHEET 2 OF —

SCANNED
REVISION ___ OF THIS DRAWING HAS BEEN SCANNED INTO THE CADCAM DATA BASE.
DAS 4/16/02
INITIALS DATE

THIS DOCUMENT CONTAINS PROPRIETARY INFORMATION AND SUCH INFORMATION MAY NOT BE DISCLOSED TO OTHERS FOR ANY PURPOSE OR USED FOR MANUFACTURING PURPOSES WITHOUT THE WRITTEN PERMISSION OF FAIRMONT TAMPER.

SWIVEL BRACKET ASSY
DWG NO Y684448-01

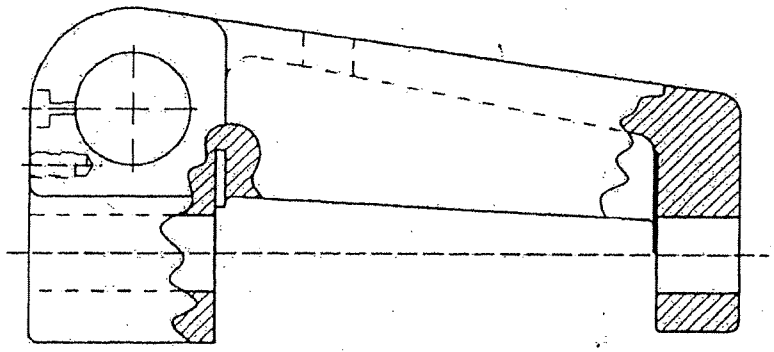

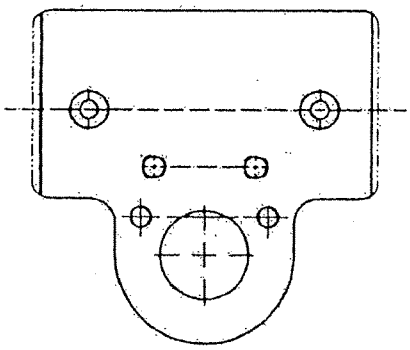

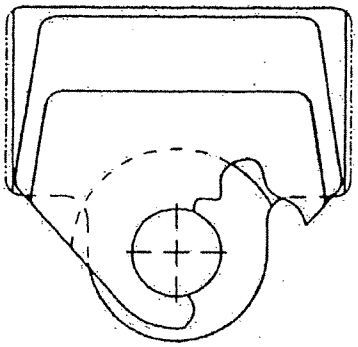

	4	PW68264K	SWIVEL BRACKET CASTING	1	
	3	B7487Y01	STEEL BUSHING	2	
	2	Z68891	SPACER	1	
	ITEM NO.	PART NUMBER	DESCRIPTION	QTY	

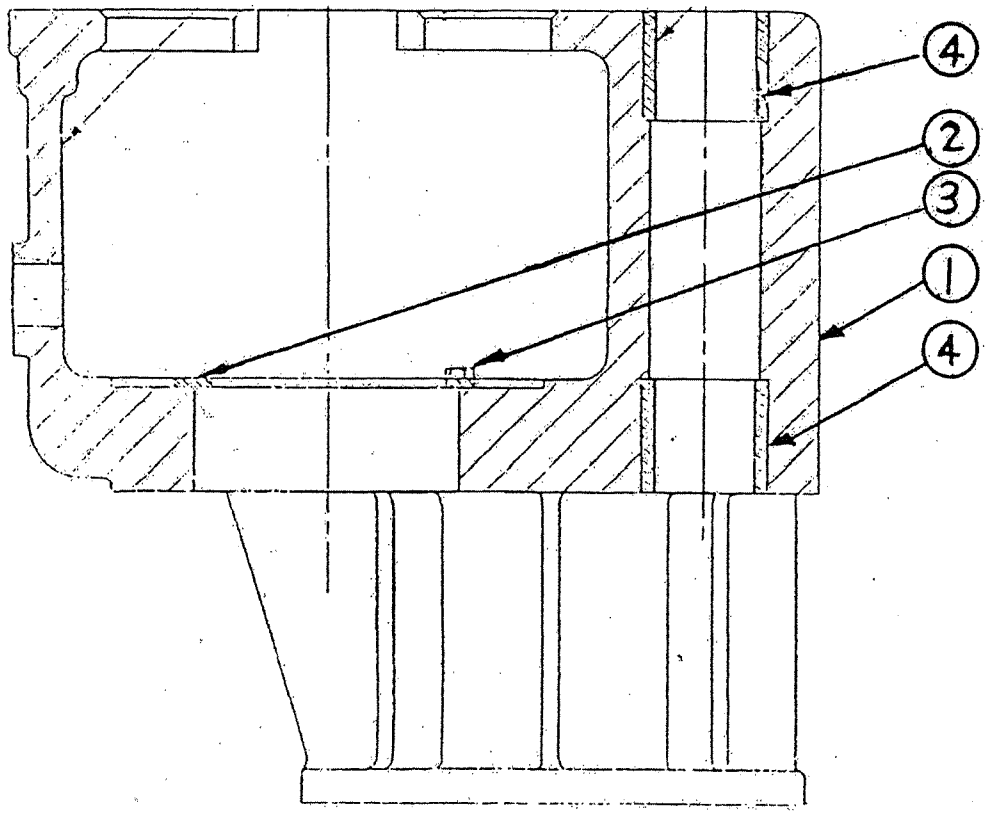

SECTION "A – A"

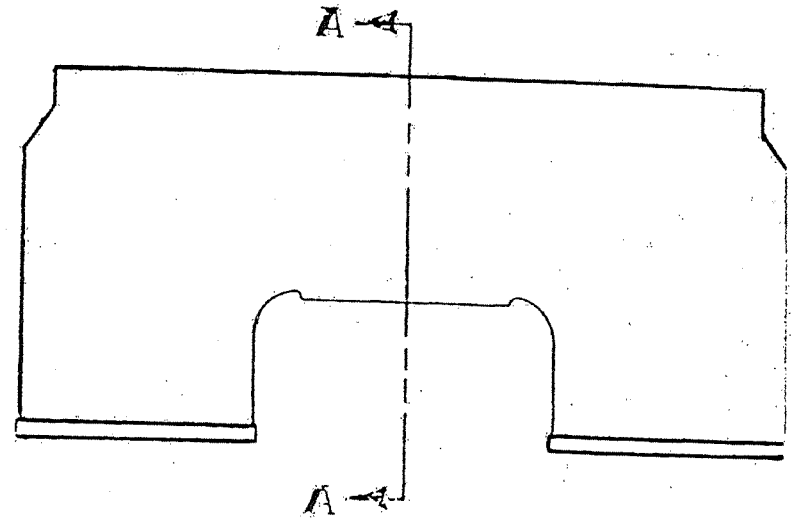

ITEM	DESCRIPTION	PART NUMBER	QTY
1	VIBRATOR HOUSING	W68347-02	1
2	BEARING RETAINER	Z682424	1
3	HEXHD CAP SCR 1/4-20 X 1/2LG	A0036001	4
4	SWIVEL BRACKET BUSHING	B7487Y01	2

VIBRATOR HOUSING ASSY
DWG NO 0-2200082-0-01

ENG. DWG NO. A4887X

REVISIONS							
NO	DER	DESCRIPTION	ZONE	DR	CK	APP	MF
1		NEW RELEASE		BV			

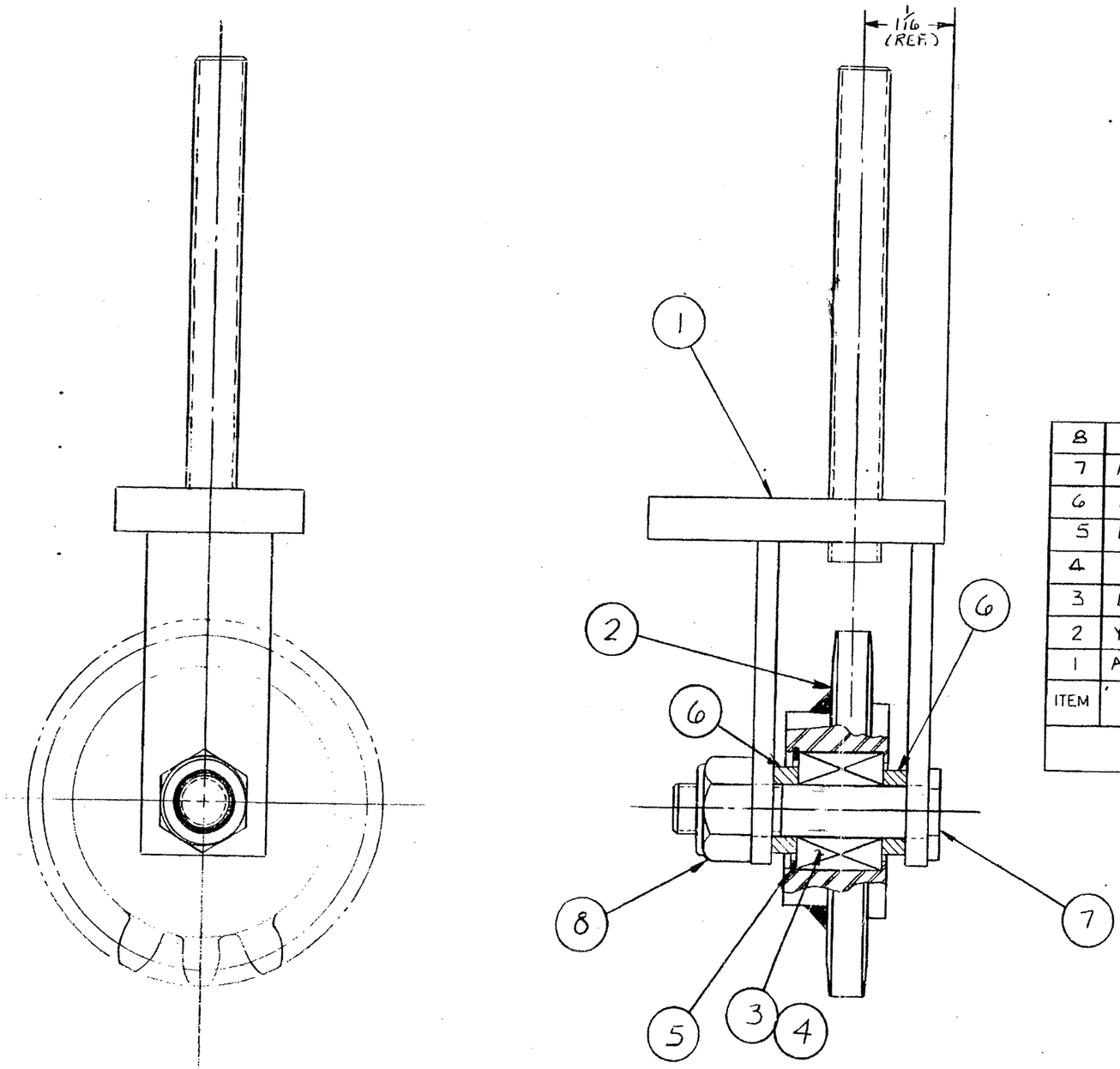

ITEM	PART NUMBER	DESCRIPTION & MATERIAL SIZE (REF. ONLY)	QTY. AA
8	L41032	5/8-11 ESNA NUT (#29NTD-HT)	1
7	A4881Y01	AXLE, IDLER	1
6	A0215T17	WASHER / SPACER (.28 LG.)	2
5	L40024	RETAINING RING (5008-137)	1
4	L420399	INNER RING	1
3	L420297	BEARING (CAGEROL)	1
2	Y710047	SPROCKET WELDMT.	1
1	A4877XAA	WMENT, IDLER CARRIER	1

PARTS LIST

THIS DOCUMENT CONTAINS PROPRIETARY INFORMATION AND SUCH INFORMATION MAY NOT BE DISCLOSED TO OTHERS FOR ANY PURPOSE OR USED FOR MANUFACTURING PURPOSES WITHOUT THE WRITTEN PERMISSION OF TAMPER.

3rd ANGLE PROJECTION

DO NOT SCALE

WEIGHT lbs.

IMPLIED TOLERANCES
ALL DIMENSIONS ARE IN INCHES – TOLERANCE UNLESS OTHERWISE SPECIFIED

NOMINAL SIZE RANGE OVER	TO	PLUS OR MINUS FRACTION	2 PLACE DECIMAL	3 PLACE DECIMAL	NOMINAL SIZE RANGE OVER	TO	PLUS OR MINUS FRACTION	2 PLACE DECIMAL	3 PLACE DECIMAL
—	1	1/64	01	003	6	24	3/64	.03	008
1	6	1/32	02	005	24	—	1/16	.05	.010

ANGULAR DIMENSIONS PLUS OR MINUS 1 DEGREE

✓ ALL MACHINED SURFACES TO HAVE A SURFACE FINISH OF 125 MICROINCHES UNLESS OTHERWISE SPECIFIED

DESCRIPTION (30)
IDLER, TRAVERSE

DRAWN	DATE Nov 7/84	MACHINE TYPE TLPM & TSPM
CHECKED	DATE	
APP	DATE	
APP	DATE	

Tamper
Div. Canron Corp.
2401 Edmund Road
West Columbia
South Carolina 29169
Tel: (803) 794-9180
Telex 573423

ENG. DWG. NO. A4887X

SHEET 1 CONT ON —

ITEM NO	PART NO.	LEG	DESCRIPTION	QTY

american blueprint of columbia
ENGS.-10

Lifting and Reference Systems

COMBO CLAMP INSTL

DWG NO. A7609WAJ(INSULATED)
DWG NO.A7609WAK(NON-INSULATED)

ITEM	DESCRIPTION	PART NUMBER	QTY AJ	QTY AK
2	1/4 X 1 1/2 COTTER PIN	A0068029	8	8
4	PIN XAG	0-3095002-0-11	2	2
6	1 SAE WSHR	A0060021	16	16
7	PIN XAG	0-3095002-0-13	2	2
8	WASHER/SPACER	D7190T06	12	12
9	PIN (RCO)	Y691328-173	2	2
10	1/4 X 2 COTTER PIN	A0068030	8	8
11	1 1/2 SAE WSHR	A0060023	8	8
12	BAR	0-3093401-0-01	2	2
13	RETAINING RING	L424870	4	4
14	SPACER	0-3019004-0-13	6	6
18	COMBO CLAMP BUSHING&SPAC	A6030Y05	2	2
19	COMBO CLAMP BUSHING&SPAC	A6030Y02	2	2
20	PIN, HI-STRENGTH	A7163T66	2	2
51	INSULATING BUSHING	Z765379-001	2	0
52	INSULATING WASHER	Z765375-001	4	0
53	INSULATING BUSHING	A1856T04	2	0
54	DISK XAG	0-1305801-0-01	2	0
55	WASHER	Z767929-002	2	0
56	COMBO CLAMP BUSHING&SPAC	A6030Y04	0	2
57	1 SAE WSHR	A0060021	0	4
58	COMBO CLAMP BUSHING&SPAC	A6030Y02	0	2
59	SPACER	0-3019004-0-13	0	2
60	COMBO CLAMP BUSHING&SPAC	A6030Y05	0	2
66	6" CYL ASSY WITH HOOK(SEE J-14)	B5715XAE	2	2
68	SLEW CYL ASSY(SEE J-12A)	B7036WAC	2	2

COMBO CLAMP INSTALLATION
DWG NO A7609WAJ(INSULATED)
▶ DWG NO A7609WAK(NON-INSULATED)

SHEET 1 OF 3

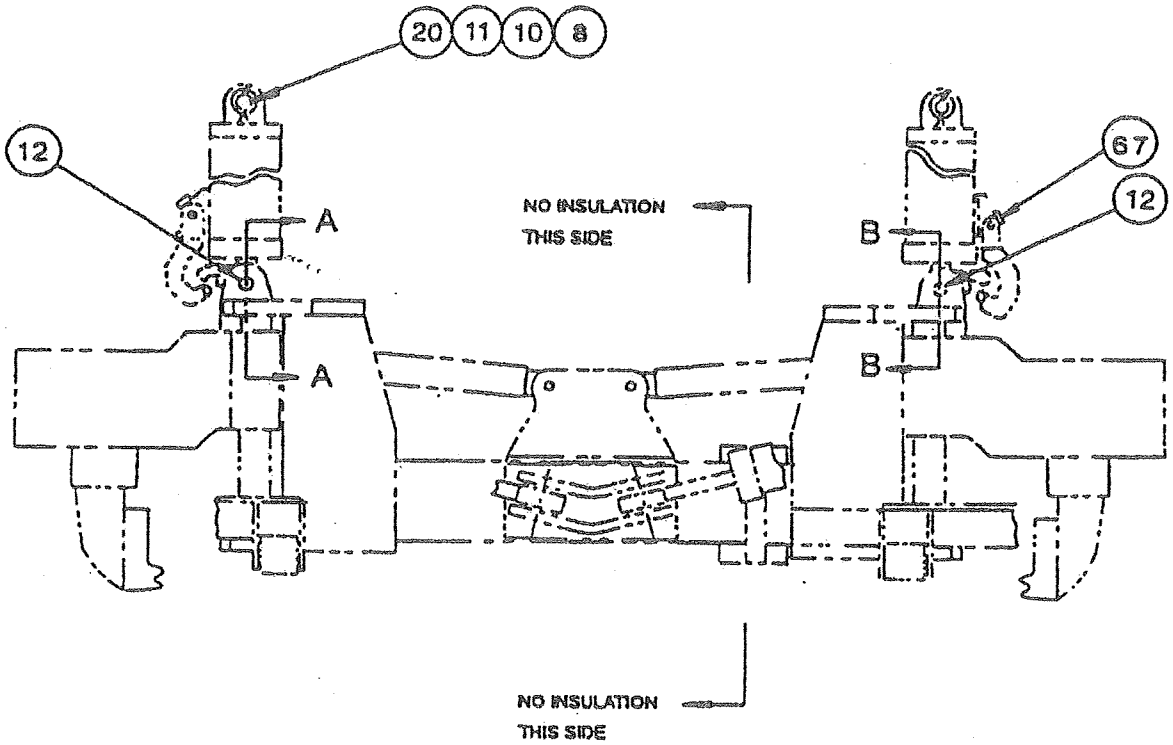

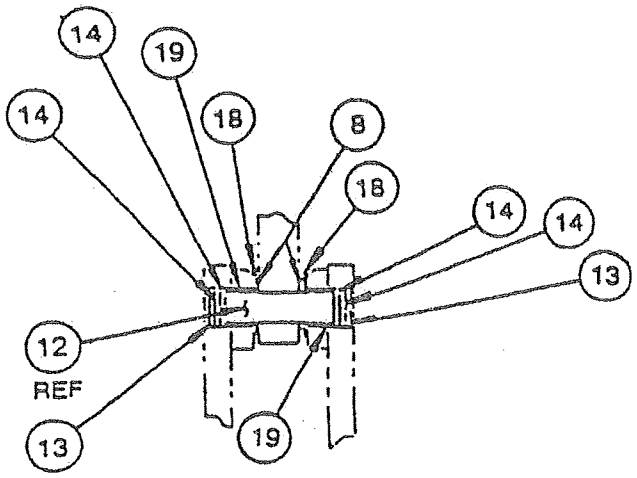

SECTION A-A

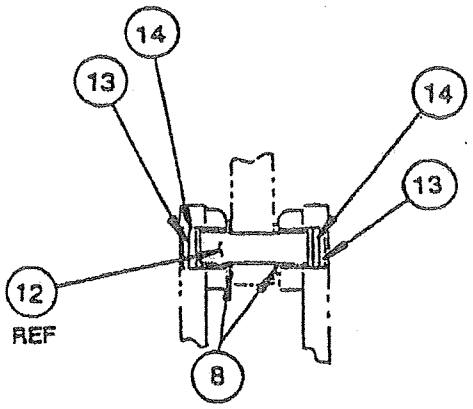

SECTION B-B

COMBO CLAMP INSTALLATION
DWG NO A7609WAJ(INSULATED)
▶ DWG NO A7609WAK(NON-INSUL)

SHEET 2 OF 3

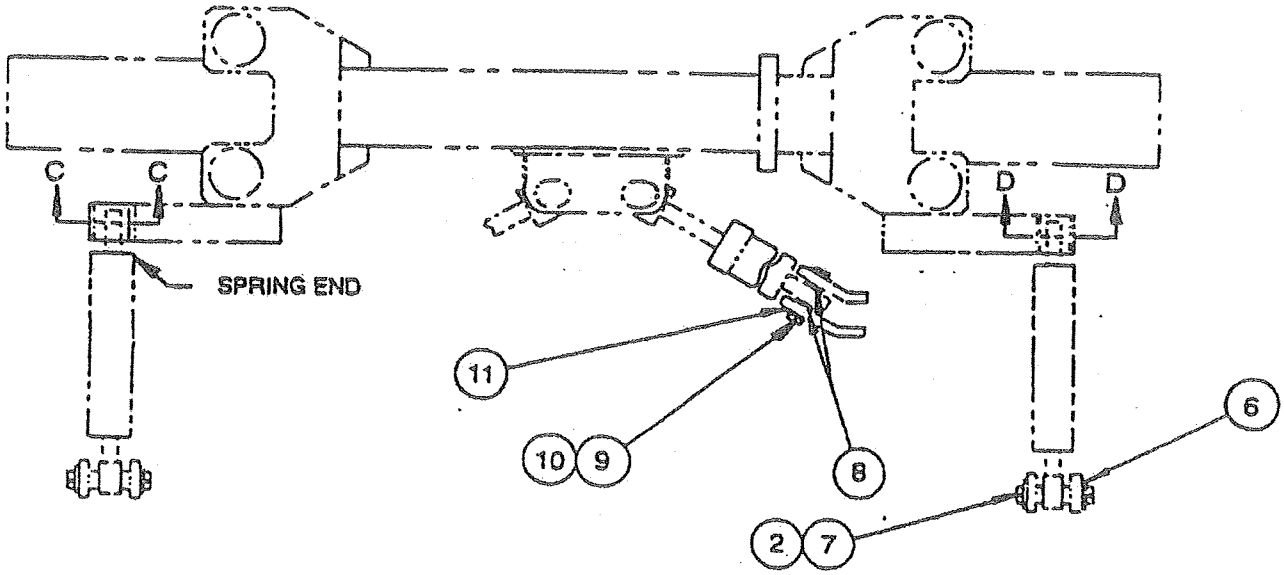

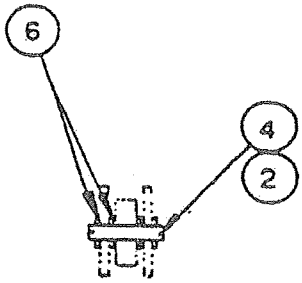

SECTION C-C

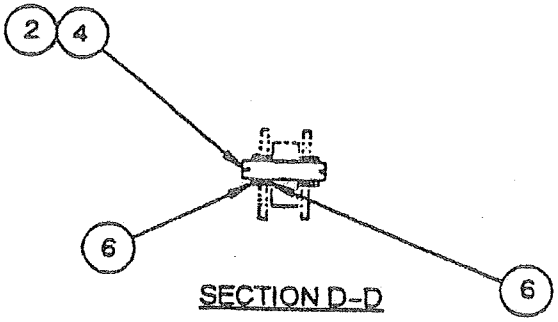

SECTION D-D

COMBO CLAMP INSTALLATION
DWG NO A7609WAJ(INSULATED)
▶ DWG NO A7609WAK(NON-INSULATED)

SHEET 3 OF 3

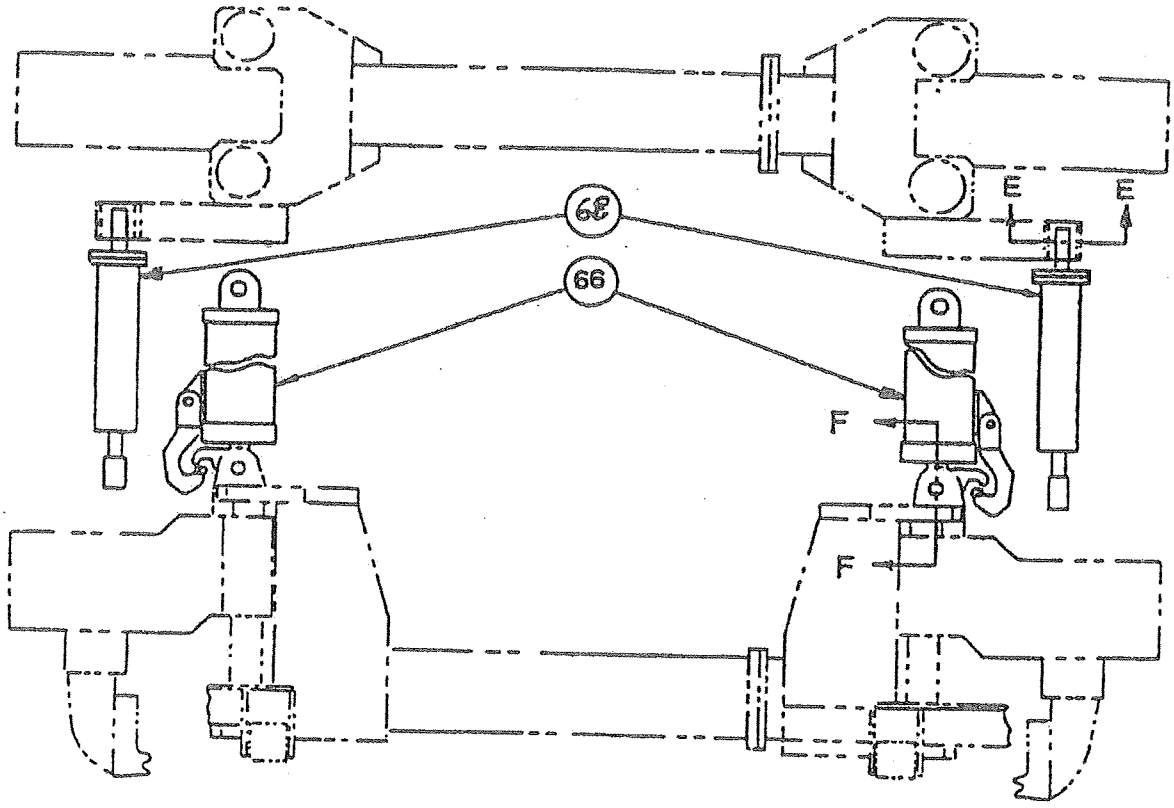

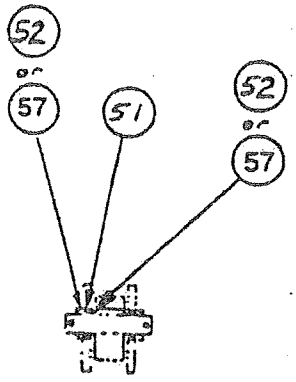

SECTION E-E

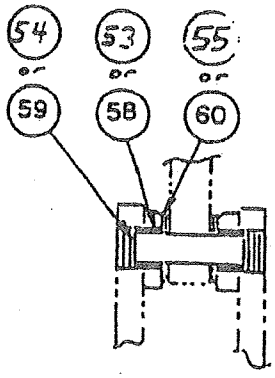

SECTION F-F

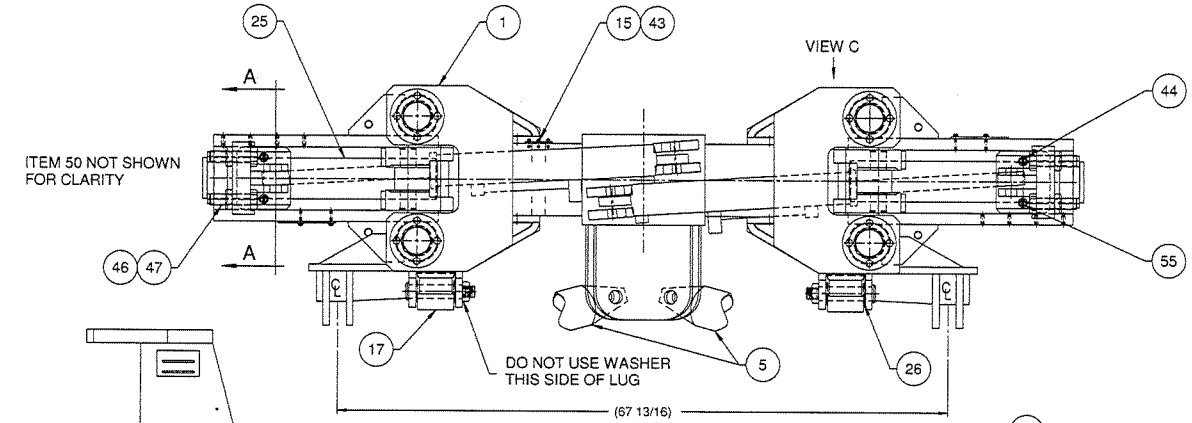

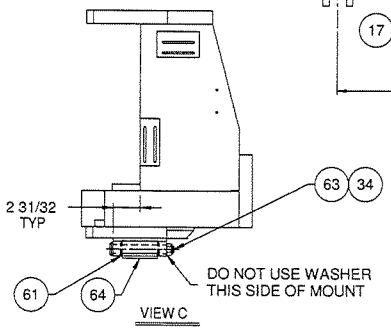

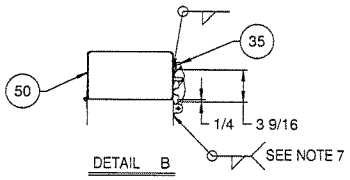

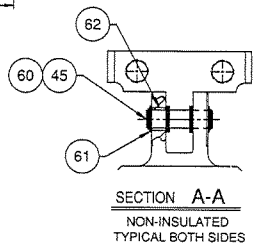

NOTES:

1- TO ALIGN GUIDE RODS, ITEM 21, IN REF TO CARRIER BOX ASSY. MOVE CARRIER BOX ASSY UP TO TOP PLATE, TACK WELD ITEM 23 TO TOP PLATE. LOWER CARRIER BOX ASSY TO BOTTOM PLATE, TACK WELD ITEM 22 TO BOTTOM PLATE. MAKE SURE CARRIER BOX ASSY SLIDES FREELY ON GUIDE RODS BEFORE FINAL WELDING.
2- TORQUE TO 265 FT*LB
3- TORQUE TO 90 FT*LB
4- USE LOCTITE 0-3040000-0-07 & TORQUE TO 970 FT*LB
5- BUSHINGS, ITEM 48, MUST BE PLACED IN HOOKS, ITEM 49, WITH OPENINGS OF GREASE GROOVES TOWARDS CENTER OF HOOK. INSTALL BUSHINGS & WIPERS, ITEM 24, USING RETAINING COMPOUND 0-3040000-0-12. STAKE LIGHTLY TO RETAIN WIPER.
6- APPLY LOCTITE 0-3040000-0-12 TO BUSHING & WIPER.
7- WELD DRAW LATCH, ITEM 35, TO FRAME AS SHOWN IN DETAIL B. WELD ONE EDGE AT A TIME ALLOWING TIME TO COOL SO THAT RUBBER WILL NOT MELT.
8- BEND UP CORNERS OF LOCKING PLATE, ITEM 37, AFTER BOLTS ARE TIGHTENED.
9- WITH BIAS CYLINDER FULLY RETRACTED, MEASURE GAUGE AT A POINT 5/8" BELOW TOP OF RAIL. USE SHIMS AS REQUIRED.

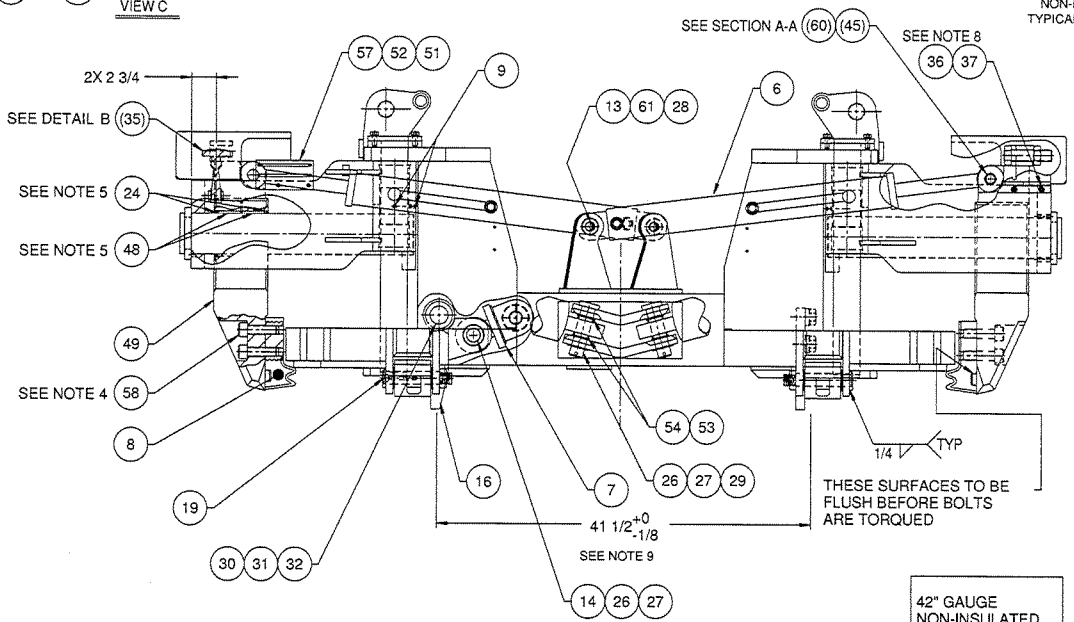

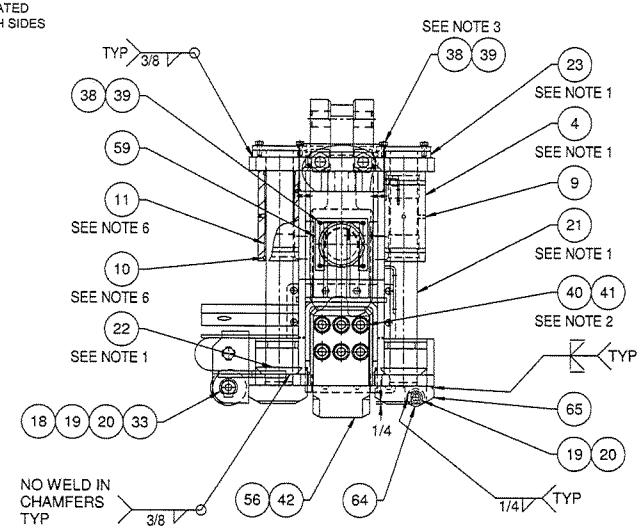

42" GAUGE
NON-INSULATED
MARK VI
W/O CENTERJACK

SEE PARTS LIST ON SHEET #3

CHANGE	REV	REVISION	DATE
100044	A	NEW RELEASE	02-08-07

COMBO CLAMP FRAME ASSY

MARK VI

4013034 E

Harsco Track Technologies
Harsco
Columbia, SC

SOLID EDGE DRAWING

Plotted by cjwolf on 2/14/2007 4013034.dft

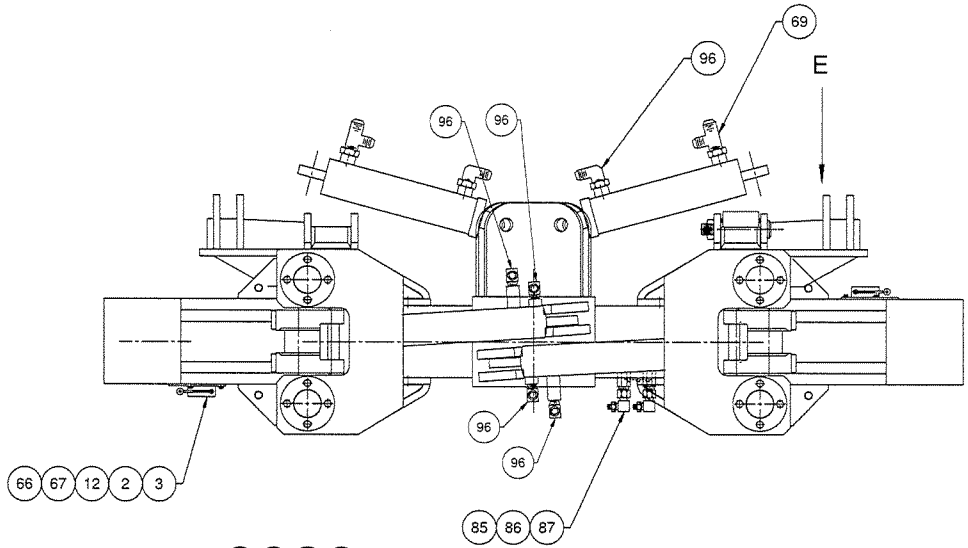

SEE MACHINE ELECTRICAL SCHEMATIC
FOR WIRE NUMBERS

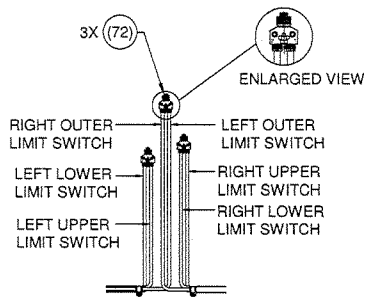

DETAIL F

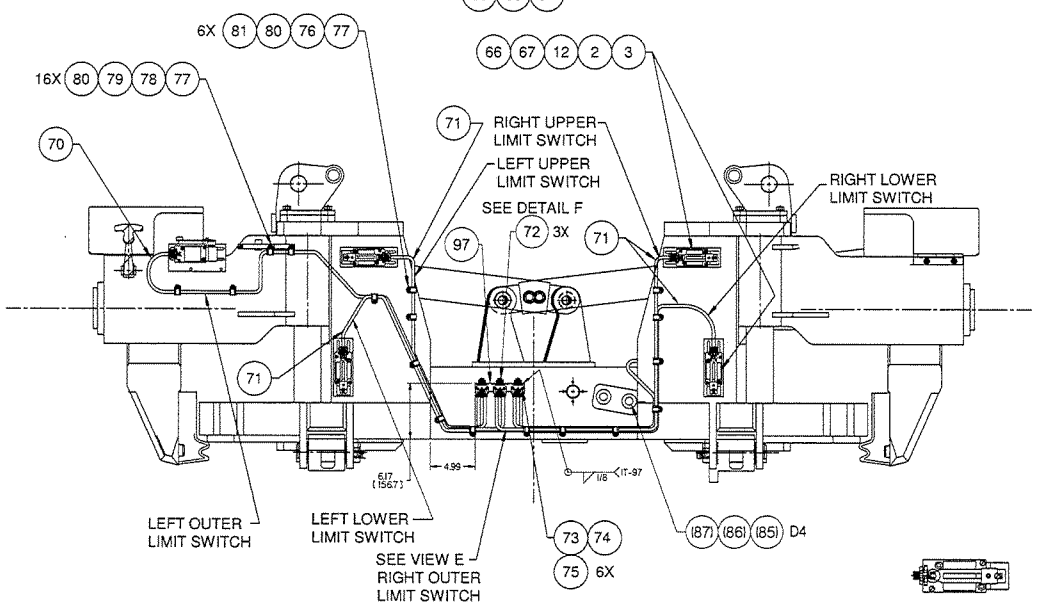

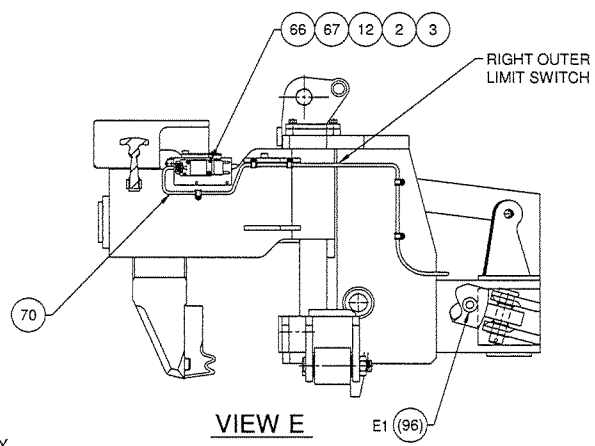

VIEW E

EXTEND ARMS ALL THE WAY OUT & MOUNT ARM SO THAT IT RUNS DOWN THE LENGTH OF THE SWITCH.

USE MASKING TAPE TO COVER THE L/S LABEL

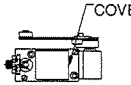

ON THE EXTEND L/S ROTATE HEADS SO THAT THE ARMS ARE ON TOP OF SWITCH WHEN MOUNTED.

NOTE:

1. USE CABLE TIE SLEEVES TO LABEL BOTH ENDS OF EACH CABLE WITH CABLE NUMBER.

SEE PARTS LIST ON SHEET #3

SOLID EDGE DRAWING

CONFIDENTIAL
© COPYRIGHT 2001 HARSCO TRACK TECHNOLOGIES. THIS DRAWING OR DOCUMENT IS THE PROPERTY OF HARSCO TRACK TECHNOLOGIES AND CONTAINS CONFIDENTIAL AND PROPRIETARY INFORMATION. ANYONE WHOM HEREIN THIS IS THE PROPERTY OF HARSCO TRACK TECHNOLOGIES BY ACCEPTING THIS DRAWING OR DOCUMENT THE RECIPIENT AGREES (1) NOT TO PRINTS, DISTRIBUTE OR MAKE AVAILABLE TO ANY THIRD PARTY OR ANY INFORMATION OR KNOWLEDGE PUBLISHED THEREIN TO ANY THIRD PARTY (2) NOT TO USE OR REPRODUCE OR USE THE DRAWING OR DOCUMENT TO MANUFACTURE ANY APPARATUS OR STRUCTURE WITHOUT THE PRIOR WRITTEN AUTHORIZATION OF HARSCO TRACK TECHNOLOGIES.

UNLESS OTHERWISE SPECIFIED ALL DIMENSIONS ARE IN U.S.A. | NAMCO CB175-17170 MOD (PITCH 1/2")

MINIMUM		MAXIMUM		MINIMUM		MAXIMUM	
LENGTH	TENSILE STRENGTH	LENGTH	TENSILE STRENGTH	LENGTH	TENSILE STRENGTH	LENGTH	TENSILE STRENGTH
2	5	20	200	1	150	2	75
7	10	40	400	3	300	7	150
15	20	75	750	6	600	15	300

LEAD SCREW WILL BE SUPPLIED AS SHOWN TO MATCH 1/2" x 1/2" NAMCO CB175-17170 MOD (PITCH 1/2")

CHANGE	NO.	REVISION	DATE
1000445	A	NEW RELEASE	02-09-07

Description	COMBO CLAMP FRAME ASSY
Drawing Number	----------
Model	4013034.dft
Scale	1:4
Machine Type	MARK VI
Drawn by	RJ Mill 02-09-07
Checked by	JMR
Approved by	MR
Size	E
Part Number	4013034
Rev	A
Sheet	2 of 3

HTT Harsco Track Technologies Hanson Columbia, SC

Plotted by cwolf on 2/14/2007 4013034.dft

IT. NO.	PART NO.	DESCRIPTION	QTY
1	G4030WAB	COMBO CLAMP BEAM WELDMENT	1
2	A0050091	10-32X2 1/4 RD HD MS CP	12
3	A0061006	#10 LOK WSHR ORDER USE F025837	12
4	D6410WAA	CARRIER BOX ASSY	2
5	B5705XAA	HYCL 4" CYL ASSY	2
6	B5708XAB	HYCL 3 X 1 1/2 X 16 7/16 CYL	2
7	B5705XAB	HYCL 4" CYL ASSY	1
8	A3033X02	HOOK INSERT	2
9	0-3304118-0-12	EXTERNAL PIPE PLUG USE F008544	8
10	0-3393001-0-05	WIPER-SEAL	8
11	0-1305728-0-01	BEARING GUIDE XAG	8
12	L422909	LONG ADJ OPERATING LEVER	6
13	0-3095002-0-11	PIN XAG	2
14	0-1305774-0-01	PIN PIVOT XAG	1
15	0-2305775-0-01	PIVOT PIN XAG	1
16	A7660YAA	BIASING PAD ASS'Y	1
17	0-2305761-0-01	ASS'Y ROLLER XAG	2
18	D6987X02	ROLLER PIN	2
19	L26028	FITTING GREASE USE F004252	4
20	0-3092105-0-14	PLATE XAG	4
21	0-2203041-0-01	GUIDE ROD XAG	4
22	0-1306039-0-01	PLATE WELD	4
23	0-1305744-0-01	PLATE GUIDE XAG	4
24	0-3393001-0-06	WIPER SEAL	4
25	A6233X01	GUIDE ROD	2
26	A0059012	1 1/2 REG PL WSHR	8
27	A0068030	1/4 X 2 COTTER PIN USE F001547	4
28	A0068029	1/4 X 1 1/2 C PIN USE F002733	4
29	0-3015002-0-26	CLEVIS PIN	2
30	0-3095002-0-09	PIN XAG	1
31	0-3019004-0-08	WASHER XAG	2
32	A0068032	1/4 X 2 1/2 COTTER PIN USE 700743250	2
33	0-3011001-0-78	LOCKNUT	2

IT. NO.	PART NO.	DESCRIPTION	QTY
34	L40931	ESNA NUT 3/4-10	2
35	0-3010025-0-04	DRAW LATCH	2
36	A0036302	3/8-16X1 H/H CS NYLOCK	8
37	G6241Y01	BOLT HEAD LOCKING PLATE	4
38	A0036122	1/2-13 X 1 1/4 CAPSCREW USE	24
39	A0061063	1/2 HVY LOK WSHR	24
40	A0036257	1-8 X 3 HHCS	6
41	A0061019	1 LOK WSHR	6
42	0-1305738-1-01	PAD REACTION	1
43	A0043032	1/4-20X5/8 SOCHDSCRNLOK	4
44	L425184	ZERK FITTING USE F009420	2
45	A4823Y01	PIN	2
46	G6961Y01	BOLT 1 1/4 X 4 1/2 FULL TH	4
47	A0056019	1 1/4-12 HEX JAM NUTS USE	4
48	0-3652060-0-01	BUSHING	4
49	A3031V02	HOOK	2
50	G6231XAA	HOOK COVER WELDMENT	2
51	A0036003	1/4-20 X 3/4 HH CAPSCREW USE	4
52	A0059028	1/4 MED CAD PL PLAIN WA	4
53	D7190T06	WASHER/SPACER	4
54	A6030Y05	COMBO CLAMP BUSHING&SPAC	8
55	L424667	PRESSURE RELIEF	2
56	A2586Y01	BIAS PAD SHIM	4
57	A6733Y02	SWITCH BRACKET	2
58	A0041184	1-8X3 1/4 SOC HD CAPSCR	4
59	A6229X01	RETAINER	2
60	0-3013001-0-05	RET RING	4
61	A0060021	1 SAE WSHR	24
62	A6030Y04	COMBO CLAMP BUSHING&SPAC	4
63	D6987X01	ROLLER PIN	2
64	A1681YAA	ROLLER ASSY	2
65	A5553W01	MT.ROLLER	2
66	A2634Y01	TAPPED PLATE	6

IT. NO.	PART NO.	DESCRIPTION	QTY
67	H5963YAA	LIMIT SWITCH ASSY	6
68	BLANK		
69	0-3304181-0-03	O-RING BARS-JIC TEE USE	2
70	414261	CABLE ASSY M12 M/F 2M	2
71	415263	CABLE ASSY M12 M/F 1M	4
72	414260	M12 "T" CONNECTOR	3
73	A0050043	8-32 X 1 1/2 RDHDMSCR	6
74	A0061005	8 LOCK WASHER	6
75	A0055005	8-32 HEX NUT	6
76	A0036001	1/4-20 X 1/2 HHCS	6
77	L40346	#9 HOSE CLAMP	22
78	A0071062	1/4-20 X 3/4 WELD STUD	6
79	L40237	1/4-20 ESNA NUT	16
80	A0059001	1/4 FLAT WASHER	22
81	A0061008	1/4 LOCK WASHER	6
82	BLANK		
83	BLANK		
84	BLANK		
85	0-3304132-0-06	REDUCER USE F040392	2
86	L423023	ADAPT - 12JICX90SW USE F013990	2
87	0-3304162-0-06	FITTING USE F023112	2
88	BLANK		
89	BLANK		
90	BLANK		
91	BLANK		
92	BLANK		
93	BLANK		
94	BLANK		
95	BLANK		
96	L422762	ELBOW ADAPTOR F016887	6
97	H6288Y01	SPLITTER BRACKET	1
98			
99			

CONFIDENTIAL
COPYRIGHT 2003 HARSCO TRACK TECHNOLOGIES. THIS DRAWING OR DOCUMENT IS THE PROPERTY OF HARSCO TRACK TECHNOLOGIES AND CONTAINS CONFIDENTIAL INFORMATION, TRADE SECRET INFORMATION AND/OR INFORMATION THAT IS PROPRIETARY TO HARSCO TRACK TECHNOLOGIES. BY ACCEPTING THIS DRAWING OR DOCUMENT, THE RECIPIENT AGREES (1) NOT TO PROVIDE, OR OTHERWISE MAKE AVAILABLE, THE DRAWING OR DOCUMENT TO ANY THIRD PARTY WITHOUT THE PRIOR WRITTEN CONSENT OF HARSCO TRACK TECHNOLOGIES; (2) NOT TO REPRODUCE OR USE THE DRAWING OR DOCUMENT TO MANUFACTURE ANY APPARATUS OR DEVICE, WITHOUT THE PRIOR WRITTEN AUTHORIZATION OF HARSCO TRACK TECHNOLOGIES

SOLID EDGE DRAWING

UNLESS OTHERWISE SPECIFIED ALL DIMENSIONS ARE IN INCHES - TOLERANCE UNLESS OTHERWISE SPECIFIED

CHANGE	REV.	REVISION	DATE	DWN/DR/CH
100949	A	NEW RELEASE	02-08-07	

COMBO CLAMP FRAME ASSY

Drawing Number: ---------- | Product Type: MARK VI

Model: 4013034.dft | Date: 02-08-07

Scale: 1:4 | Drawn: JBR | Checked: CJ Wolf | Date: 02-08-07 | Approved: JBR

Part: | Revision: 4013034 | Size: E | Sheet: 3 of 3

HTT Harsco Track Technologies
Hanover
Columbia, SC

Plotted by cjwolf on 6/22/2007 4013034.dft

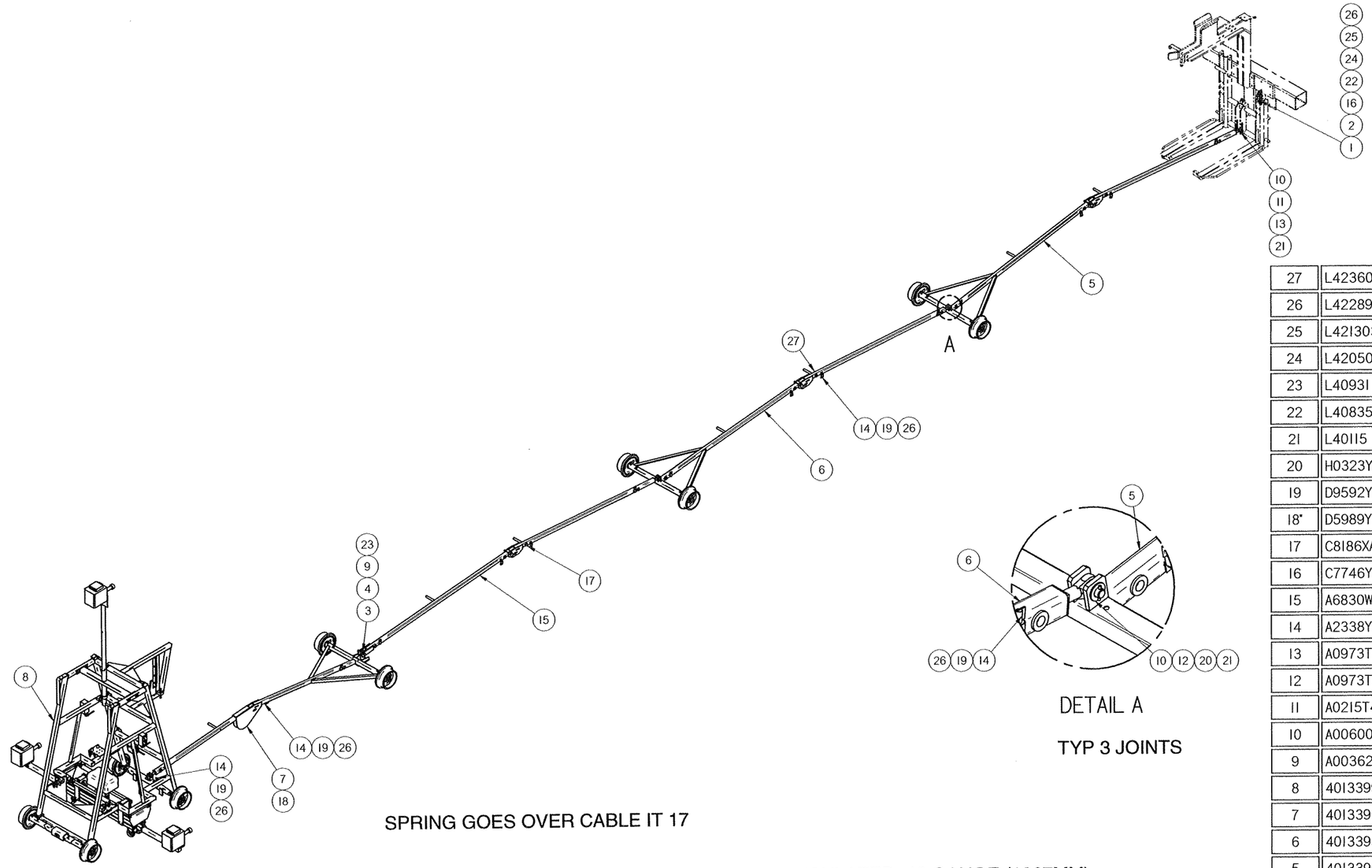

DETAIL A

TYP 3 JOINTS

SPRING GOES OVER CABLE IT 17

INSULATED 42 GAUGE (1067MM)
W/OUT UNDER CRADLE
(FOR LASER ALIGMENT)
STD LENGTH PUSHER BARS
24 SLOT CHOPPER SURFACE &
LINER PROJECTORS
136" PROJECTOR HEIGHT

It No	Part Number	Description	Qty
27	L423607	TUBE 1/4	150
26	L422895	TERMINAL LUG	18
25	L421303	STRAIN RELIEF 90 DEG 3/4 IN	2
24	L420507	PIPE PLUG, 3/4 NPT, INT SQ	1
23	L40931	LOCKNUT, 3/4-10, HEAVY THIN	1
22	L40835	SET SCREW CONNECTOR	5
21	L40115	ROLL PIN, 3/16 DIA X 1 1/4 LG	8
20	H0323Y01	SPACER (1" OD x 3/4 ID x 1/8 THK)	6
19	D9592Y01	BRAIDED GROUND STRAP #6	17
18*	D5989Y01	JOINT SPRING	1
17	C8186XAB	CL123	1
16	C7746Y01	CONDULET TEE	1
15	A6830WAA	PUSHER BAR	1
14	A2338Y08	SHRINK TUBING, 1/2" DIA	17
13	A0973T27	PIN	1
12	A0973T24	PIN (3/4 DIA x 3 LG)	3
11	A0215T41	WASHER / SPACER	2
10	A0060018	3/4 SAE WASHER	8
9	A0036223	3/4-10 X 4 1/4 HHCS GR. 5	1
8	4013399	PROJ BUGGY ASSY (42 GA)	1
7	4013396	RECORDER BUGGY (42GA)	1
6	4013395	PUSHER BUGGY (42GA)	1
5	4013390	PUSHER BUGGY (42 GA)	1
4	4011214	PIN RETAINER UPPER	1
3	4011213	PIVOT PIN	1
2	0-3224000-0-02	COVER, CONDUIT	1
1	0-3205001-0-01	GASKET, 3/4" CONDUIT COVER	1

SOLID EDGE DRAWING

CONFIDENTIAL
© COPYRIGHT 2001 HARSCO TRACK TECHNOLOGIES. THIS DRAWING OR DOCUMENT IS THE PROPERTY OF HARSCO TRACK TECHNOLOGIES AND EMBODIES CONFIDENTIAL INFORMATION, TRADE SECRET INFORMATION, AND/OR KNOW-HOW THAT IS THE PROPERTY OF HARSCO TRACK TECHNOLOGIES. BY ACCEPTING THIS DRAWING OR DOCUMENT, THE RECIPIENT AGREES (1) NOT TO PROVIDE, OR OTHERWISE MAKE AVAILABLE, THE DRAWING OR DOCUMENT, OR ANY INFORMATION OR KNOW-HOW EMBODIED THEREIN, TO ANY THIRD PARTY AND (2) NOT TO REPRODUCE OR USE THE DRAWING OR DOCUMENT TO MANUFACTURE ANY APPARATUS OR DEVICE, WITHOUT THE PRIOR WRITTEN AUTHORIZATION OF HARSCO TRACK TECHNOLOGIES.

IMPLIED TOLERANCES
ALL DIMENSIONS ARE IN INCHES - TOLERANCE UNLESS OTHERWISE SPECIFIED

INCH NOMINAL SIZE RANGE		PLUS OR MINUS 2 PLACE DECIMAL	PLUS OR MINUS 3 PLACE DECIMAL	METRIC NOMINAL SIZE RANGE		PLUS OR MINUS 1 PLACE DECIMAL	PLUS OR MINUS 2 PLACE DECIMAL
OVER	TO			OVER	TO		
0	6	.03	.005	0	150	.8	.13
6	24	.04	.008	150	600	1.0	.20
24	-	.06	.010	-	600	1.5	.25

UNLESS OTHERWISE SPECIFIED ALL MACHINED SURFACES WILL HAVE A SURFACE FINISH OF 125 MICROINCHES ARGUMENT TOLERANCE OF +5/- CONSISTENCY WITHIN .015

THIRD ANGLE PROJECTION

UNLESS OTHERWISE SPECIFIED ALL WELDS SHOULD ADHERE TO THE LATEST HTT WELD INC SPECIFICATION

CHANGE	R/L	REVISION	DATE
ECN-101009	A	RELEASE	30 Mar 07

Description: BUGGY & SPACER BAR ASSY (42 GA)
Drawing Number: ----------
Machine Type: MARK VI
Model: 4013389.asm
Drawn: MJT
Date Drawn: 30 Mar 07
Weight: 1421.5 lbm
Scale: -------
Part:
APVD Dwg: JBR
APVD Chkrg: JOC
Part Number: 4013389
Size: D
Sheet: 1 of 1

HTT
Harsco Track Technologies
Harsco
Columbia, SC

Plotted by mtollefson on 6/22/2007 4013389.dft

Item Number	Document Number	Description	Quantity
1	0-1302790-0-04	FITTING BOX	1
2	0-2100861-0-10	SURFACE/LINER PROJECTOR ASSY	3
3	0-2201452-0-01	WHEEL ASSY INSUL	4
4	0-2302674-0-08	SPACER BAR	1
5	0-2306204-0-01	PIN	1
6	0-3011001-0-09	1/2-20 ESNA NUT	4
7	0-3014001-0-08	CLEVIS W/PIN	1
8	0-3015002-0-17	CLEVIS PIN Ø3/8	1
9	0-3205006-0-01	GASKET	1
10	0-3212004-0-30	SO CABLE #12-2	10
11	0-3220010-0-01	BOX COVER	1
12	0-3230012-0-01	SET SCREW CONNECTOR	2
13	0-3236012-0-01	RECEPTICLE TWISTLOCK	2
14	0-3413001-0-04	PILOT OPERATED AIR VALVE	2
15	0-3470019-0-06	DBL ACT AIR CYL	1
16	0-3652003-0-03	OIL IMPREGNATED FLG BRG	2
17	4006064	AIR VALVE BRKT	1
18	4013400	SPACER BAR	1
19	4013401	LOCK UP BRKT	1
21	4013404	PIVOT AXLE	1
22	4013407	AXLE WLDT (FRT 42 GA)	1
23	4013411	EXTENSION BAR REWORK	2
24	4013413	PROJ RIGHT SIDE WLDT (42 GA)	1
25	4013414	PROJ LEFT SIDE WLDT (42 GA)	1
26	A0036003	1/4-20 X 3/4 HHCS	2
27	A0036005	1/4-20 X 1" HHCS	16
28	A0036012	1/4-20 x 2 3/4 HHCS	10
29	A0036033	5/16-18UNC X 7/8 HHCS	4
30	A0036065	3/8-16 X 1 1/4" HHCS GR.5	12
31	A0036070	3/8-16 X 2 1/2 HHCS	8
32	A0041043	1/4-20 X 1 SOC HD CS	8
33	A0050039	8-32 X 1/2 RD HD MS	4
34	A0052027	1/4-20 X 1 FL HD MS	4
35	A0055005	#8-32 PLATED HEX NUT	3
36	A0056009	1/2-20 JAM NUT	16
37	A0059001	1/4 FLAT WASHER	12
38	A0059003	3/8 FLAT WASHER	8
39	A0061005	#8 LOCKWASHER	3
40	A0061008	1/4 MEDIUM LOCK WASHER	2
41	A0061009	5/16 LOCK WASHER	4
42	A0061013	1/2 MED LOCK WASHER	16
43	A0061027	1/4 HIGH COLLAR LOCK WASHER	8
44	A0071062	WELD STUD, 1/4-20 X 3/4	16
45	A1278Y14	STRAIN RELIEF 90 DEG 3/4"	2
46	A5443Y04	COMPRESSION TUBE FITTING	2

Item Number	Document Number	Description	Quantity
47	A5443Y07	1/4 TUBING 90 DEG X 1/4 NPT	10
48	A5443Y08	COMPRESSION TUBE FITTING	2
49	A6819WAC	AXLE MOUNT	1
50	A7019Y01	WEAR PAD	1
51	A7339Y02	MOUNTING PAD	4
52	C6100T17	EYE 1/4 THK	4
53	C8830T23	SQ STL TUBE (2x2x1/8W)	2
54	C8863Y01	BOX COVER	2
55	C8865X02	RECEPTACLE BOX	2
56	C9360X01	LUG	2
57	D0090Y05	WIRE NUT 76B	6
58	D4827Y01	MALE ROD END W / STUD	8
59	D5903YAA	BIASING BRKT WLDT	1
60	L40237	LOCKNUT, 1/4-20, HEAVY	42
61	L40347	CUSHION CLAMP	10
62	L40387	LOCKNUT, 3/8-16, HEAVY	20
63	L40817	1/2 IN ST STRAIN RELIEF	2
64	L40818	STRAIN RELIEF STR 1/2	2
65	L411085	CABLE 14/2 TYPE SO	21
66	L420607	STRAIN RELIEF 90 DEG 1/2 IN	3
67	L422001	PIP PIN	2
68	L422845	REGULATOR, AIR	2
69	L423607	TUBE 1/4	10
70	L425851	PIP PIN T-HANDLE	2
71	X763526-003	CRADLE BRKT	2
72	Y690486	ADAPTER PLATE ASSY	2
73	4013500	PROJECTOR MOUNT (ALUM SLIDE)	1
74	4013498	PROJECTOR SUPPORT WLDT (ALUM)	1
75	B0038T06	ROUND BAR (ALUM)	1
76	L41582	5/16-18 HEX LOCK NUT	8
77	A0036041	5/16-18 X 2 3/4 HHCS	8
78	0-3015004-0-17	HITCH PIN, 1/2 DIA	1
79	0-3015006-0-49	ROLL PIN 3/16 x 2 1/4	1

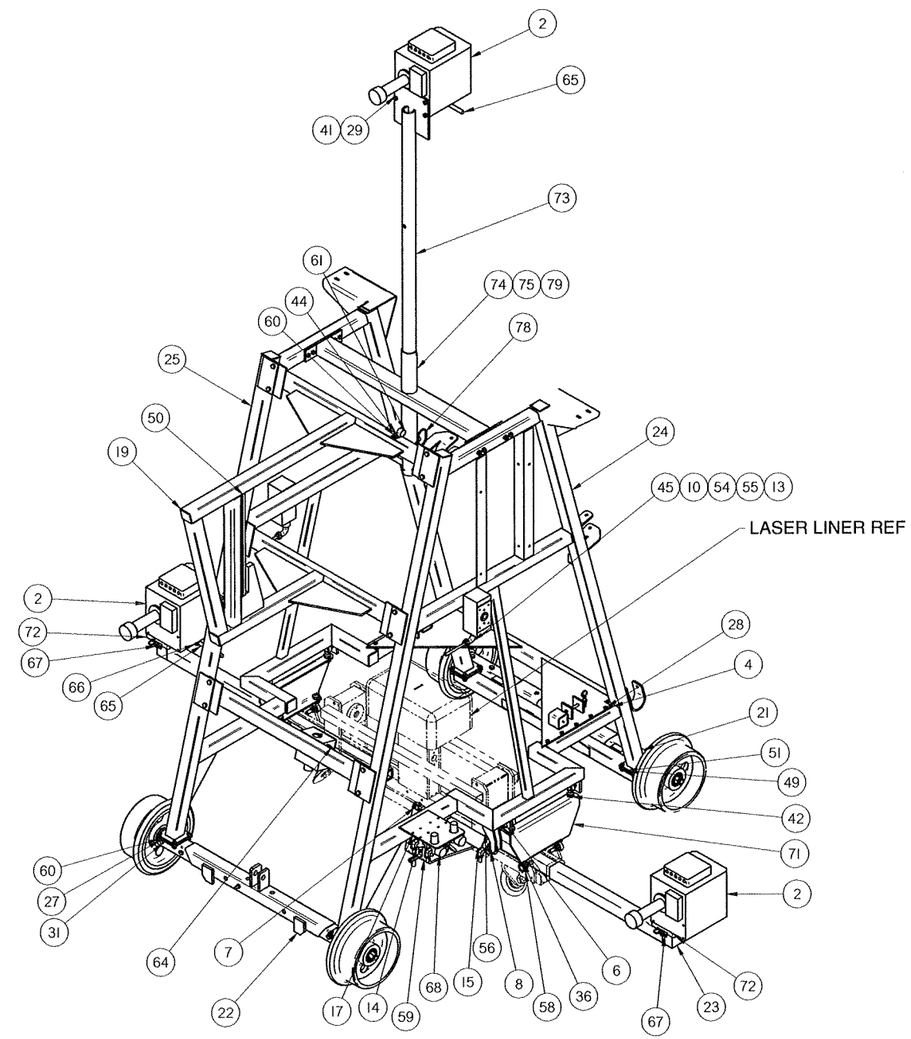

INSULATED 42 GAUGE (1067MM) W/OUT UNDERCRADLE (FOR LASER ALIGMENT)
24 SLOT CHOPPER SURGACE AND DUAL LINER PROJECTORS 136" PROJECTOR HEIGTH

SOLID EDGE DRAWING

CONFIDENTIAL
© COPYRIGHT 2001 HARSCO TRACK TECHNOLOGIES. THIS DRAWING OR DOCUMENT IS THE PROPERTY OF HARSCO TRACK TECHNOLOGIES AND EMBODIES CONFIDENTIAL INFORMATION, TRADE SECRET INFORMATION, AND/OR KNOW-HOW THAT IS THE PROPERTY OF HARSCO TRACK TECHNOLOGIES. BY ACCEPTING THIS DRAWING OR DOCUMENT, THE RECIPIENT AGREES (1) NOT TO PROVIDE, OR OTHERWISE MAKE AVAILABLE, THE DRAWING OR DOCUMENT, OR ANY INFORMATION OR KNOW-HOW EMBODIED THEREIN, TO ANY THIRD PARTY AND (2) NOT TO REPRODUCE OR USE THE DRAWING OR DOCUMENT TO MANUFACTURE ANY APPARATUS OR DEVICE, WITHOUT THE PRIOR WRITTEN AUTHORIZATION OF HARSCO TRACK TECHNOLOGIES.

IMPLIED TOLERANCES
ALL DIMENSIONS ARE IN INCHES - TOLERANCE UNLESS OTHERWISE SPECIFIED

NOMINAL SIZE RANGE		HIGH PLUS OR MINUS		METRIC PLUS OR MINUS	
OVER	TO	2 PLACE DECIMAL	3 PLACE DECIMAL	1 PLACE DECIMAL	2 PLACE DECIMAL
0	6	.03	.005	0	.150	.8	.13
6	24	.04	.008	.150	.600	1.0	.20
24	-	.06	.010	-	.600	1.5	.25

UNLESS OTHERWISE SPECIFIED ALL MACHINED SURFACES WILL HAVE:
A SURFACE FINISH OF 125 MICROINCHES
ANGULAR TOLERANCE OF ± 30'
CONCENTRICITY WITHIN .010

THIRD ANGLE PROJECTION

UNLESS OTHERWISE SPECIFIED ALL WELDS SHOULD ADHERE TO THE LATEST HTT WELDING SPECIFICATION

CHANGE	F/L	REVISION	DATE
ECN-101009	A	RELEASE	26 Mar 07
101026	B	PICTORIAL CHANGE TO IT-24 & 25	4/17/07

Description: PROJ BUGGY ASSY (42 GA)
Drawing Number: ----------
Machine Type: MARK VI
Model: 4013399.asm
Drawn: mfolleson
Date Drawn: 26 MAR 07
Weight: 916.6 lbm
Scale: -----
APVD Dwg: JBR
APVD Mfg: JOC
Mat'l:

HTT
Harsco Track Technologies
Harsco
Columbia, SC

Part Number: 4013399
Size: D
Sheet: 1 of 3

Plotted by jrowell on 6/22/2007 4013399.dft

NOTES:

1 USE SHIMS ITEM 51 AS REQUIRED FOR 136 INCH HEIGHT.

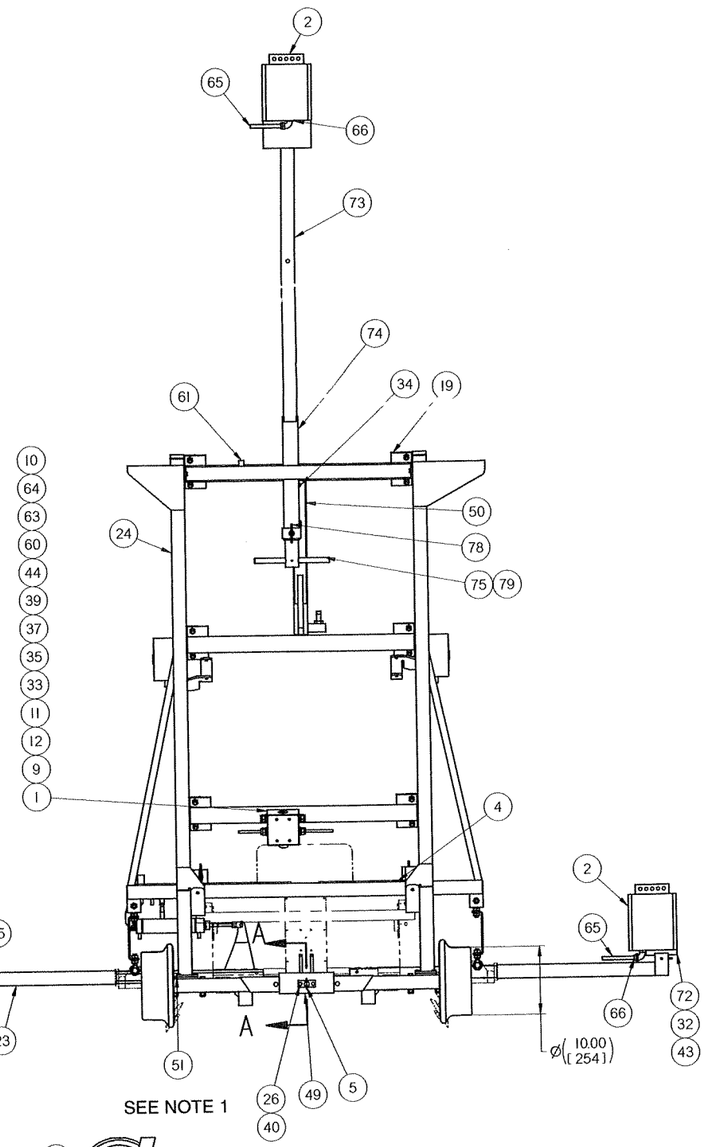

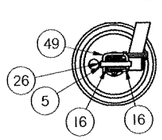

SECTION A-A

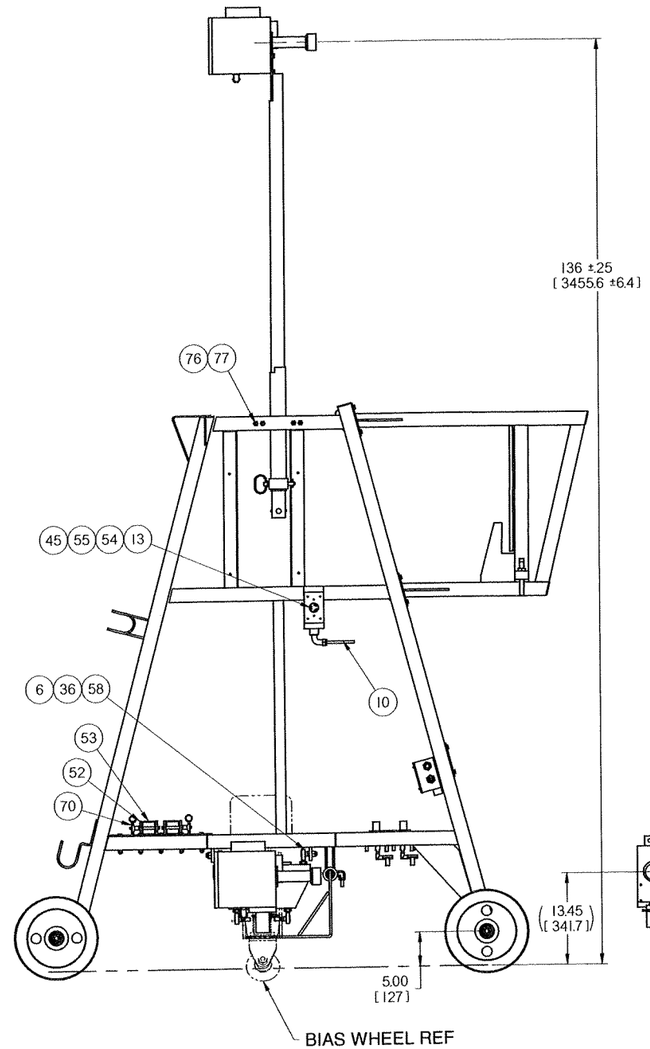

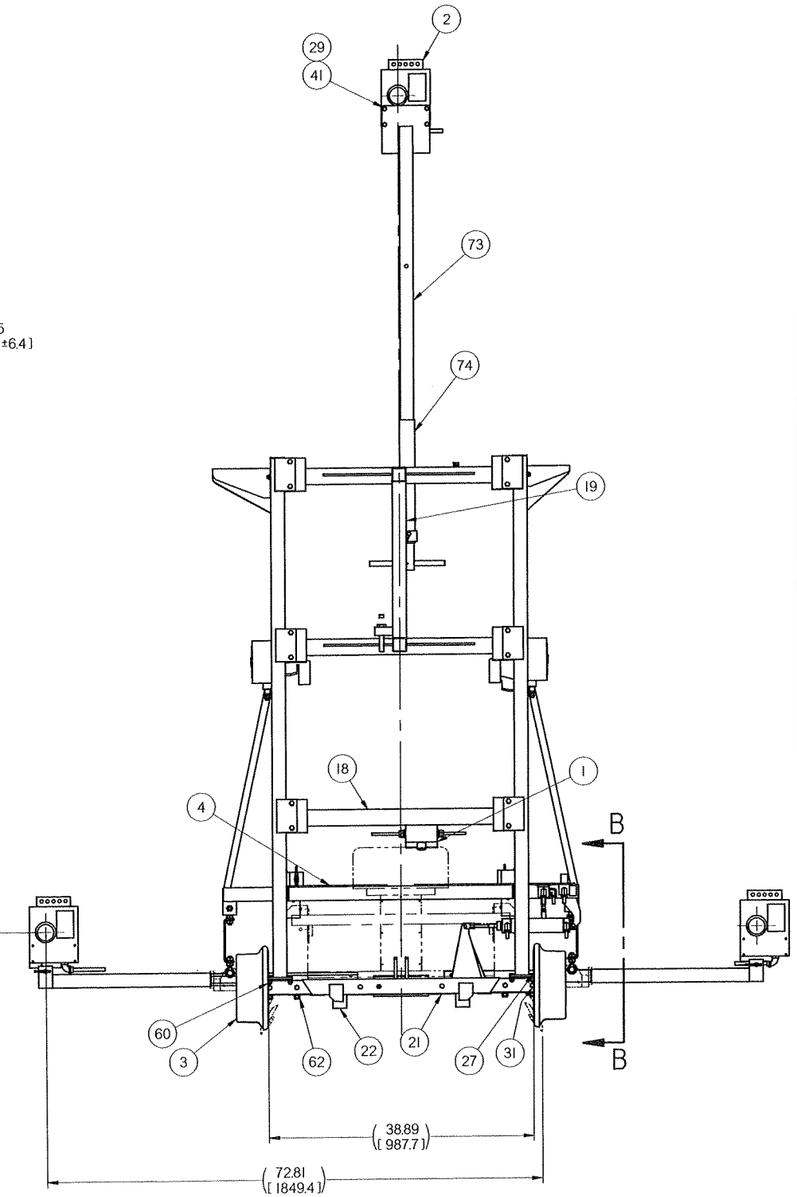

SOLID EDGE DRAWING

CONFIDENTIAL

© COPYRIGHT 2001 HARSCO TRACK TECHNOLOGIES. THIS DRAWING OR DOCUMENT IS THE PROPERTY OF HARSCO TRACK TECHNOLOGIES AND EMBODIES CONFIDENTIAL INFORMATION, TRADE SECRET INFORMATION, AND/OR KNOW-HOW THAT IS THE PROPERTY OF HARSCO TRACK TECHNOLOGIES. BY ACCEPTING THIS DRAWING OR DOCUMENT, THE RECIPIENT AGREES (1) NOT TO PROVIDE, OR OTHERWISE MAKE AVAILABLE, THE DRAWING OR DOCUMENT, OR ANY INFORMATION OR KNOW-HOW EMBODIED THEREIN, TO ANY THIRD PARTY AND (2) NOT TO REPRODUCE OR USE THE DRAWING OR DOCUMENT TO MANUFACTURE ANY APPARATUS OR DEVICE, WITHOUT THE PRIOR WRITTEN AUTHORIZATION OF HARSCO TRACK TECHNOLOGIES.

IMPLIED TOLERANCES

ALL DIMENSIONS ARE IN INCHES - TOLERANCE UNLESS OTHERWISE SPECIFIED

NOMINAL SIZE RANGE OVER	TO	INCH PLUS OR MINUS 2 PLACE DECIMAL	3 PLACE DECIMAL	NOMINAL SIZE RANGE OVER	TO	METRIC PLUS OR MINUS 1 PLACE DECIMAL	2 PLACE DECIMAL
0	6	.03	.005	0	150	.8	.13
6	24	.04	.008	150	600	1.0	.20
24	-	.06	.010	-	600	1.5	.25

UNLESS OTHERWISE SPECIFIED ALL MACHINED SURFACES WILL HAVE A SURFACE FINISH OF 125 MICROINCHES ANGLES WITH TOLERANCE OF ± 30' CONCENTRICITY WITHIN .010

THIRD ANGLE PROJECTION

UNLESS OTHERWISE SPECIFIED ALL WELDS GRAND ADHERE TO THE LATEST HTT WELD INSPECTION SPECIFICATION

CHANGE	R/L	REVISION	DATE
ECN-101009	A	RELEASE	26 Mar 07
101026	B	PICTORIAL CHANGE TO IT-24 & 25	4/17/07

Description: PROJ BUGGY ASSY 142 GAI

Drawing Number: ----------

Model: 4013399.asm

Weight: 916.6 lbm

Scale: -----

Matl:

Machine Type: MARK VI

Drawn: mfolfelson

Date Drawn: 26 MAR 07

APVD Dwg: JBR

APVD Dfg: JOC

Part Number: 4013399

Size: D

Sheet: 2 of 3

HTT

Harsco Track Technologies

Harsco

Columbia, SC

Plotted by jrowell on 6/22/2007 4013399.dft

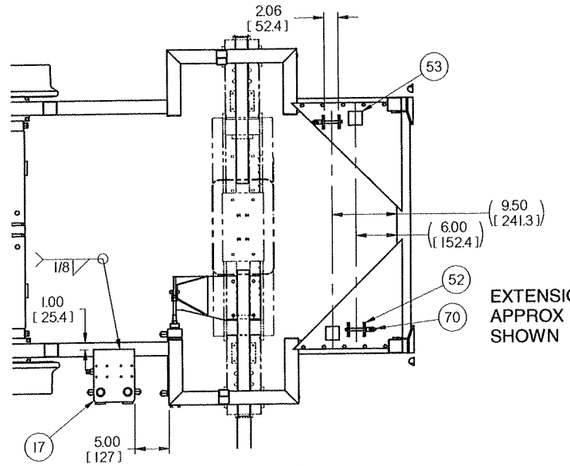

EXTENSION BAR STORAGE APPROX LOCATION AS SHOWN

SECTION C-C

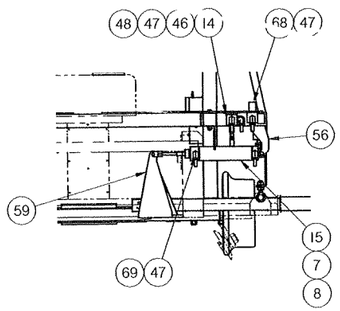

LOCATE AIR CYL LUGS WITH LASER LINER CENTERED & AIR CYL AT MID STROKE

SECTION E-E

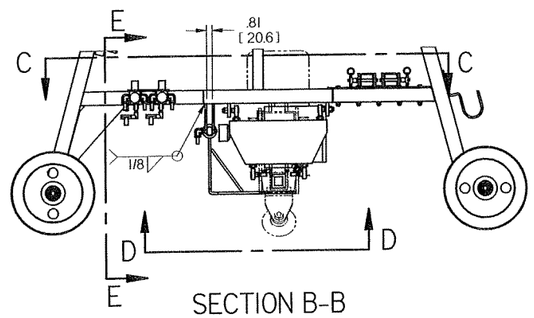

SECTION B-B

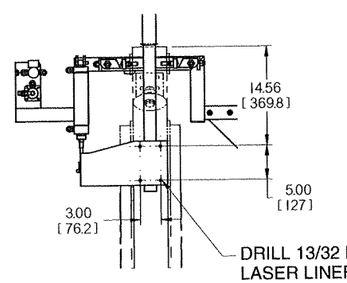

DRILL 13/32 DIA HOLES QTY 4 THRU LASER LINER CHANNEL (MOTOR END)

SECTION D-D
(LASER LINER CHANNEL REWORK)

CONFIDENTIAL
© COPYRIGHT 2001 HARSCO TRACK TECHNOLOGIES. THIS DRAWING OR DOCUMENT IS THE PROPERTY OF HARSCO TRACK TECHNOLOGIES AND EMBODIES CONFIDENTIAL INFORMATION, TRADE SECRET INFORMATION, AND/OR KNOW-HOW THAT IS THE PROPERTY OF HARSCO TRACK TECHNOLOGIES. BY ACCEPTING THIS DRAWING OR DOCUMENT, THE RECIPIENT AGREES (1) NOT TO PROVIDE, OR OTHERWISE MAKE AVAILABLE THE DRAWING OR DOCUMENT, OR ANY INFORMATION OR KNOW-HOW EMBODIED THEREIN, TO ANY THIRD PARTY AND (2) NOT TO REPRODUCE OR USE THE DRAWING OR DOCUMENT TO MANUFACTURE ANY APPARATUS OR DEVICE, WITHOUT THE PRIOR WRITTEN AUTHORIZATION OF HARSCO TRACK TECHNOLOGIES.

SOLID EDGE DRAWING

IMPLIED TOLERANCES
ALL DIMENSIONS ARE IN INCHES - TOLERANCE UNLESS OTHERWISE SPECIFIED

NOMINAL SIZE RANGE OVER	TO	INCH PLUS OR MINUS 2 PLACE DECIMAL	3 PLACE DECIMAL	METRIC PLUS OR MINUS NOMINAL SIZE RANGE OVER	TO	1 PLACE DECIMAL	2 PLACE DECIMAL
0	6	.03	.005	0	150	.8	.13
6	24	.04	.008	150	600	1.0	.20
24	-	.06	.010	-	600	1.5	.25

UNLESS OTHERWISE SPECIFIED ALL MACHINED SURFACES WILL HAVE A SURFACE FINISH OF 125 MICRO-INCHES AND AN ULTIMATE TOLERANCE OF +.007 CONCENTRICITY WITHIN 0.01

THIRD ANGLE PROJECTION

UNLESS OTHERWISE SPECIFIED ALL WELDS SHOULD ADHERE TO THE LATEST HTT WELD INSPECTION STD

CHANGE	R/L	REVISION	DATE
ECN-101009	A	RELEASE	26 Mar 07
101026	B	PICTORIAL CHANGE TO IT-24 & 25	4/17/07

Description: PROJ BUGGY ASSY (42 GA)
Drawing Number: ----------
Machine Type: MARK VI
Model: 4013399.asm
Weight: 916.6 lbm
Scale: -----
Drawn: mbillelson Date Drawn: 26 MAR 07
APVD Dwg: JBR APVD Mfg: JOC
Mat'l

HTT
Harsco Track Technologies
Harsco
Columbia, SC

Part Number: 4013399 Size: D Sheet: 3 of 3

Plotted by jrowell on 6/22/2007 4013399.dft

ENG.DWG.NO.
0-2201452-0-01

REVISIONS							
NO	ER	DESCRIPTION	ZONE	DR	CK	APP	MF
G	12564.1	REDRAWN FOR S. E.		AO	AML	AML	

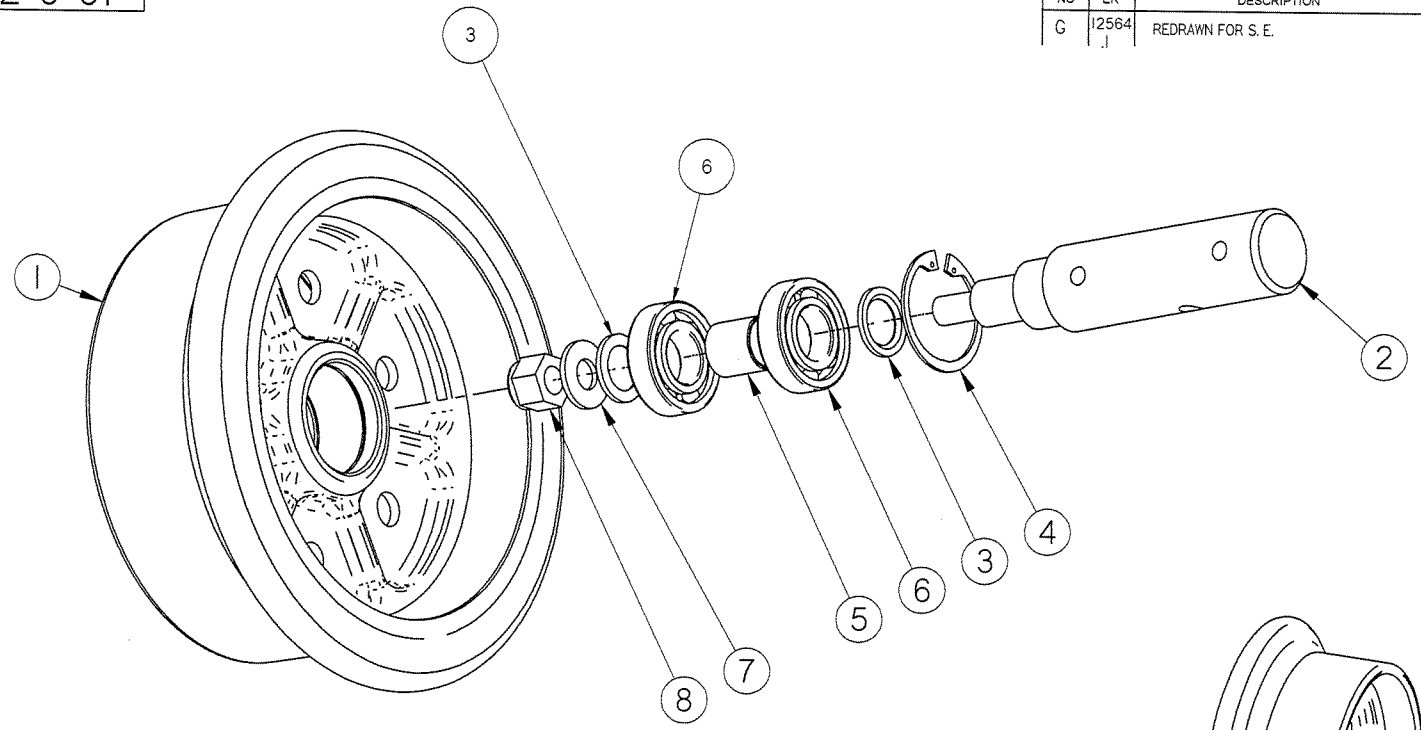

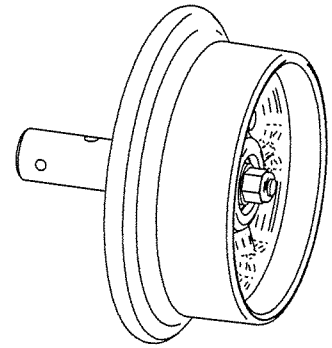

Item Number	Document Number	Title	Qty
1	X685831	10" WHEEL	1
2	0-1304933-0-01	WHEEL SHAFT	1
3	Z62175	INSULATING WASHER	2
4	L40001	RETAINING RING	1
5	Z685917	INSULATING BUSHING	1
6	L40213	BALL BRG 30 mm	2
7	A0059031	5/8 PLAIN WASHER MED	1
8	L40006	ESNA NUT 5/8-11	1

THIS DOCUMENT CONTAINS PROPRIETARY INFORMATION AND SUCH INFORMATION MAY NOT BE DISCLOSED TO OTHERS FOR ANY PURPOSE OR USED FOR MANUFACTURING PURPOSES WITHOUT THE WRITTEN PERMISSION OF FAIRMONT TAMPER

SOLID EDGE

IMPLIED TOLERANCES
ALL DIMENSIONS ARE IN INCHES-TOLERANCE UNLESS OTHERWISE SPECIFIED

NOMINAL SIZE RANGE		PLUS OR MINUS			NOMINAL SIZE RANGE		PLUS OR MINUS		
OVER	TO	FRACTION	2 PLACE DECIMAL	3 PLACE DECIMAL	OVER	TO	FRACTION	2 PLACE DECIMAL	3 PLACE DECIMAL
-	1	1/64	.01	.003	6	24	3/64	.03	.006
1	6	1/32	.02	.005	24	-	1/16	.05	.010

ANGULAR DIMENSIONS PLUS OR MINUS 1 DEGREE

√ ALL MACHINED SURFACES TO HAVE A SURFACE FINISH OF 125 MICROINCHES UNLESS OTHERWISE SPECIFIED

WELDING SPECIFICATION

UNLESS OTHERWISE SPECIFIED ALL WELDS SHOULD ADHERE TO FAIRMONT TAMPER WELDING SPECIFICATION NO. 101

WEIGHT 17.475 lbm lbs.

3rd ANGLE PROJECTION

DO NOT SCALE

SHEET 1 OF 1

MATERIAL

DESCRIPTION (24)
WHEEL ASSY INSUL

DRAWN douzts	DATE 8/13/2007	MACHINE TYPE MK IV	
CHECKED AML	DATE 12/11/02	HTT Harsco Track Technologies	
APP-ENG AML	DATE 12/11/02	Harsco	
APP-MFG	DATE	2401 Edmund Road-Box 20 West Columbia, SC 29171-0020 (803) 822-9180	
LAST ECR. 12564.1	CHECKED / DATE	ENG.DWG.NO. 0-2201452-0-01	C

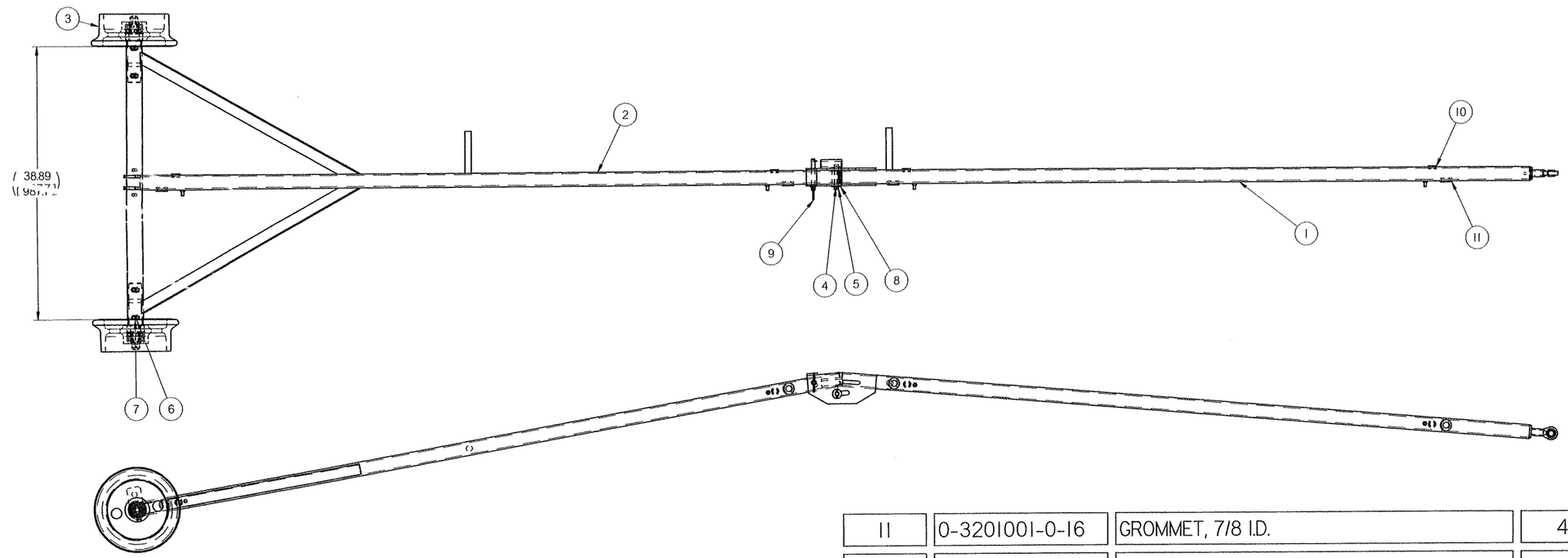

UNFOLD PUSHER BARS OUT TO THEIR MAXIMUM AND USE HOLE IN SIDE PLATE AS A TEMPLATE TO LOCATE AND DRILL 9/16 DIA HOLD FOR LOCKIN PIN

Item Number	Document Number	Description	Quantity
11	0-3201001-0-16	GROMMET, 7/8 I.D.	4
10	L41938	GROMMET, 5/8 I.D.	4
9	0-3015004-0-17	HITCH PIN, 1/2 DIA	1
8	A0059007	5/8 FLAT WASHER	2
7	A0036070	3/8-16 2 1/2 HHCS	4
6	L40387	LOCKNUT, 3/8-16, HEAVY	4
5	B5391T82	PIN	1
4	L40115	ROLL PIN, 3/16 DIA X 1 1/4 LG	2
3	0-2201452-0-01	WHEEL ASSY INSUL	2
2	4013391	PUSHER BAR (42 GA)	1
1	A6823XAA	PUSHER BAR	1

SOLID EDGE DRAWING

CONFIDENTIAL
© COPYRIGHT 2001 HARSCO TRACK TECHNOLOGIES. THIS DRAWING OR DOCUMENT IS THE PROPERTY OF HARSCO TRACK TECHNOLOGIES AND EMBODIES CONFIDENTIAL INFORMATION, TRADE SECRET INFORMATION, AND/OR KNOW-HOW THAT IS THE PROPERTY OF HARSCO TRACK TECHNOLOGIES. BY ACCEPTING THIS DRAWING OR DOCUMENT, THE RECIPIENT AGREES (1) NOT TO PROVIDE, OR OTHERWISE MAKE AVAILABLE, THE DRAWING OR DOCUMENT, OR ANY INFORMATION OR KNOW-HOW EMBODIED THEREIN, TO ANY THIRD PARTY AND (2) NOT TO REPRODUCE OR USE THE DRAWING OR DOCUMENT TO MANUFACTURE ANY APPARATUS OR DEVICE, WITHOUT THE PRIOR WRITTEN AUTHORIZATION OF HARSCO TRACK TECHNOLOGIES.

IMPLIED TOLERANCES
ALL DIMENSIONS ARE IN INCHES - TOLERANCE UNLESS OTHERWISE SPECIFIED

NOMINAL DIMENSIONS		INCH PLUS OR MINUS		NOMINAL DIMENSIONS		METRIC PLUS OR MINUS	
OVER	TO	3 PLACE DECIMAL	2 PLACE DECIMAL	OVER	TO	3 PLACE DECIMAL	2 PLACE DECIMAL
0	6	.03	.005	0	150	.8	.13
6	24	.04	.005	150	600	1.0	.20
24	-	.06	.010	-	600	1.5	.25

UNLESS OTHERWISE SPECIFIED ALL MACHINED SURFACES WILL HAVE A SURFACE FINISH OF 125 MICROINCHES AND AN ANGULAR TOLERANCE OF ± 0.5° CONCENTRICITY WITHIN 0.03

THIRD ANGLE PROJECTION

UNLESS OTHERWISE SPECIFIED ALL WELDS SHALL ADHERE TO THE LATEST HTT WELD PROCEDURE SPECIFICATION

CHANGE	R/L	REVISION	DATE
ECN-101009	A	RELEASE	24 Mar 07

Description: PUSHER BUGGY (42 GA)
Drawing Number: ----------
Model: 4013390.asm(EXTENDED
Weight: 136.0 lbm
Scale: -----
Machine Type: MARK VI
Drawn: MJT
Date Drawn: 24 Mar 07
APVD Dwg: JBR
APVD DxEg: JOC
Part Number: 4013390
Size: D
Sheet: 1 of 1

HTT
Harsco Track Technologies
Harsco
Columbia, SC

Plotted by mtollefson on 6/22/2007 4013390.dft

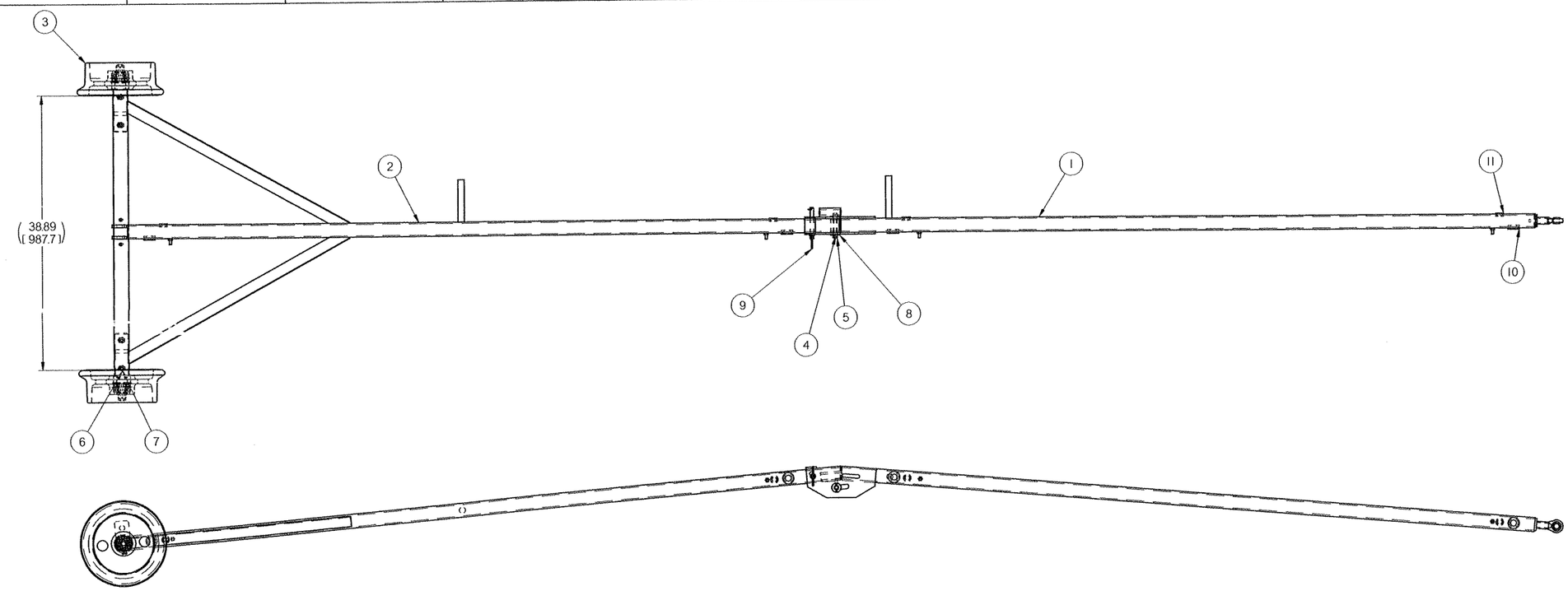

Item Number	Document Number	Description	Quantity
11	L41938	GROMMET, 5/8 I.D.	4
10	0-3201001-0-16	GROMMET, 7/8 I.D.	4
9	0-3015004-0-17	HITCH PIN, 1/2 DIA	1
8	A0059007	5/8 FLAT WASHER	2
7	A0036070	3/8-16 2 1/2 HHCS	4
6	L40387	LOCKNUT, 3/8-16, HEAVY	4
5	B5391T82	PIN	1
4	L40115	ROLL PIN, 3/16 DIA X 1 1/4 LG	2
3	0-2201452-0-01	WHEEL ASSY INSUL	2
2	4013391	PUSHER BAR (42 GA)	1
1	A6823XAB	PUSHER BAR	1

CONFIDENTIAL
© COPYRIGHT 2001 HARSCO TRACK TECHNOLOGIES. THIS DRAWING OR DOCUMENT IS THE PROPERTY OF HARSCO TRACK TECHNOLOGIES AND EMBODIES CONFIDENTIAL INFORMATION, TRADE SECRET INFORMATION, AND/OR KNOW-HOW THAT IS THE PROPERTY OF HARSCO TRACK TECHNOLOGIES. BY ACCEPTING THIS DRAWING OR DOCUMENT, THE RECIPIENT AGREES (1) NOT TO PROVIDE, OR OTHERWISE MAKE AVAILABLE THE DRAWING OR DOCUMENT, OR ANY INFORMATION OR KNOW-HOW EMBODIED THEREIN, TO ANY THIRD PARTY AND (2) NOT TO REPRODUCE OR USE THE DRAWING OR DOCUMENT TO MANUFACTURE ANY APPARATUS OR DEVICE, WITHOUT THE PRIOR WRITTEN AUTHORIZATION OF HARSCO TRACK TECHNOLOGIES.

SOLID EDGE DRAWING

IMPLIED TOLERANCES
ALL DIMENSIONS ARE IN INCHES - TOLERANCE UNLESS OTHERWISE SPECIFIED

NOMINAL SIZE RANGE		INCH PLUS OR MINUS			NOMINAL SIZE RANGE		METRIC PLUS OR MINUS	
OVER	TO	1 PLACE DECIMAL	2 PLACE DECIMAL	3 PLACE DECIMAL	OVER	TO	1 PLACE DECIMAL	2 PLACE DECIMAL
0	6	.03	.005	0	150	.8	.13	
6	24	.04	.008	150	600	1.0	.20	
24	-	.06	.010	-	600	1.5	.25	

UNLESS OTHERWISE SPECIFIED ALL MACHINED SURFACES WILL HAVE:
A SURFACE FINISH OF 125 MICROINCHES
ANGULAR TOLERANCE OF ± 0.5°
CONCENTRICITY WITHIN .010

THIRD ANGLE PROJECTION

UNLESS OTHERWISE SPECIFIED ALL WELDS SHALL ADHERE TO THE LATEST AWS WELDING SPECIFICATION 1.1

CHANGE	R/L	REVISION	DATE
ECN-101009	A	RELEASE	24 May 07

Description: PUSHER BUGGY (42GA)
Drawing Number: ----------
Model: 4013395.asmEXTENDED
Weight: *136.0 lbm
Scale: ----
Material:
Machine Type: MARK VI
Drawn: MJT
Date Drawn: 24 MAR 07
APVD Eng: JBR
APVD Dsng: JOC

HTT
Harsco Track Technologies
Harsco
Columbia, SC

Part Number: 4013395
Size: D
Sheet: 1 of 1

Plotted by mtollefson on 6/22/2007 4013395.dft

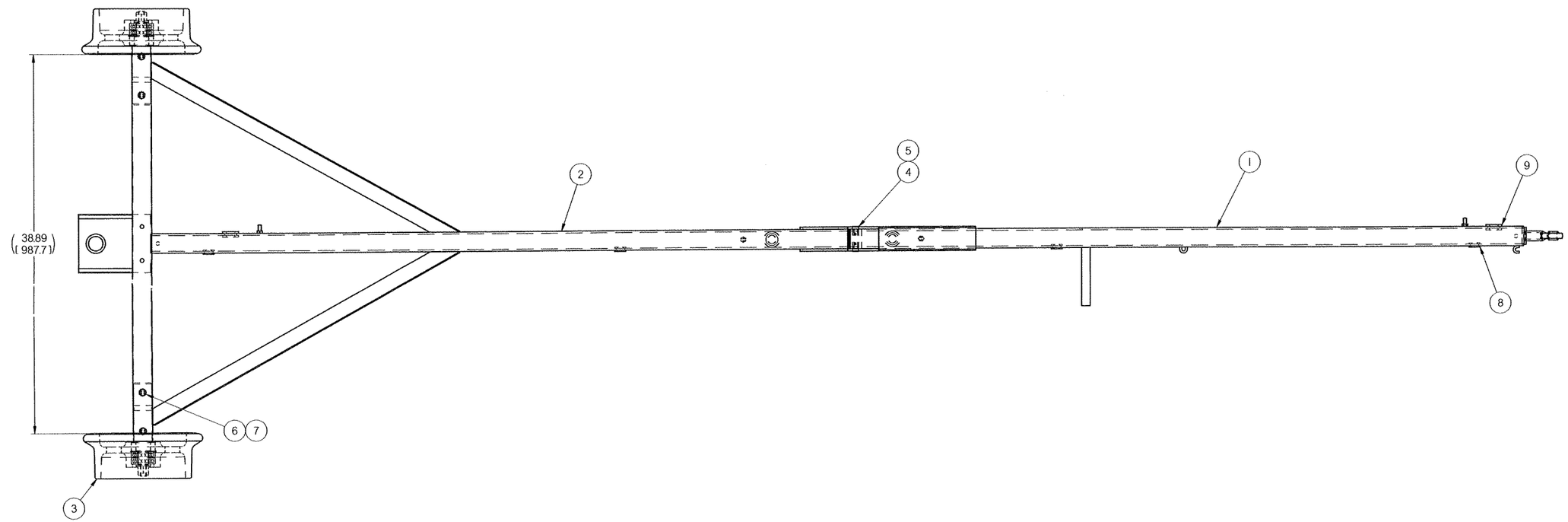

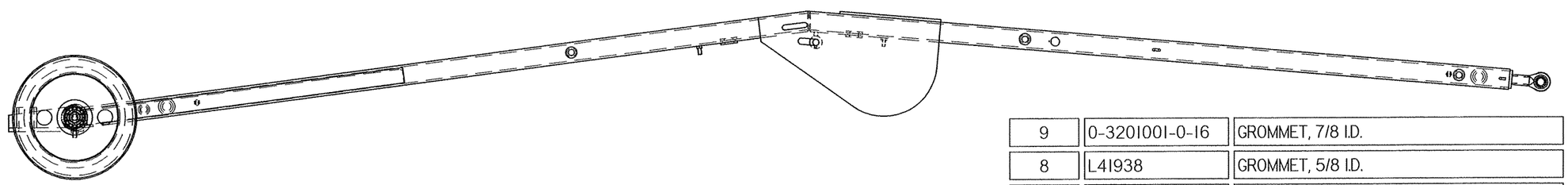

Item Number	Document Number	Description	Quantity
9	0-3201001-0-16	GROMMET, 7/8 I.D.	4
8	L41938	GROMMET, 5/8 I.D.	4
7	A0036072	3/8-16 X 3 HHCS	4
6	L40387	LOCKNUT, 3/8-16, HEAVY	4
5	A0062071	1/4-20 X 5/16 CUP PT SHSS	2
4	A0957T45	PIN	1
3	0-2201452-0-01	WHEEL ASSY INSUL	2
2	4013397	PUSHER BUGGY FRAME (42GA)	1
1	A6834WAA	PUSHER BAR	1

CONFIDENTIAL
© COPYRIGHT 2001 HARSCO TRACK TECHNOLOGIES. THIS DRAWING OR DOCUMENT IS THE PROPERTY OF HARSCO TRACK TECHNOLOGIES AND EMBODIES CONFIDENTIAL INFORMATION, TRADE SECRET INFORMATION, AND/OR KNOW-HOW THAT IS THE PROPERTY OF HARSCO TRACK TECHNOLOGIES. BY ACCEPTING THIS DRAWING OR DOCUMENT, THE RECIPIENT AGREES (1) NOT TO PROVIDE, OR OTHERWISE MAKE AVAILABLE, THE DRAWING OR DOCUMENT, OR ANY INFORMATION OR KNOW-HOW EMBODIED THEREIN, TO ANY THIRD PARTY AND (2) NOT TO REPRODUCE OR USE THE DRAWING OR DOCUMENT TO MANUFACTURE ANY APPARATUS OR DEVICE, WITHOUT THE PRIOR WRITTEN AUTHORIZATION OF HARSCO TRACK TECHNOLOGIES.

SOLID EDGE DRAWING

IMPLIED TOLERANCES
ALL DIMENSIONS ARE IN INCHES - TOLERANCE UNLESS OTHERWISE SPECIFIED

NOMINAL DIMENSION		INCH PLUS OR MINUS		NOMINAL DIMENSION	METRIC PLUS OR MINUS	
OVER	TO	2 PLACE DECIMAL	3 PLACE DECIMAL	OVER	TO	1 PLACE DECIMAL	2 PLACE DECIMAL
0	6	.03	.005	0	150	.8	.13
6	24	.04	.008	150	600	1.0	.20
24	-	.06	.010	-	600	1.5	.25

UNLESS OTHERWISE SPECIFIED ALL MACHINED SURFACES WILL HAVE A SURFACE FINISH OF 125 MICROINCHES AVERAGE TOLERANCE OF ±.007 CONCENTRICITY WITHIN .010

THIRD ANGLE PROJECTION

UNLESS OTHERWISE SPECIFIED ALL WELDS SHOULD ADHERE TO THE LATEST ITEM WELDING SPECIFICATION 101

CHANGE	R/L	REVISION	DATE
ECN-101009	A	RELEASE	24 Mar 07

Description: RECORDER BUGGY (42GA)
Drawing Number: ----------
Machine Type: MARK VI
Model: 4013396.asm!EXTENDED
Drawn: MJT
Date Drawn: 24 MAR 07
Weight: 131.7 lbm
Scale: -----
APVD Dwg: JBR
APVD Mfrg: JOC
Matl:

HTT
Harsco Track Technologies
Harsco
Columbia, SC

Part Number: 4013396
Size: D
Sheet: 1 of 1

Plotted by mtollefson on 6/22/2007 4013396.dft

PARTS LIST

ASSEMBLY IDENTIFIER

ITEM NO	PART NUMBER	DESCRIPTION	QUANTITY
1	0-1100860-0-01	PROJ HOUSING DRILLING	1
2	BLANK		
3	Y684614	INFRARED FILTER ASSEMBLY	1
4	X752836A	COVER ASSY	1
5	B9263Y01	PROJECTOR BULB	1
6	C8106Y01	SOCKET RWK, D.C.	1
7	Z754020A	CHOPPER DISK ASSY	1
8	Z684284	LAMP BRKT	2
9	Y683992	LENS HOLDER BRKT	1
10	C1182X01	BRACKET	1
11	Z684112	PROJ LENS HOLDER ASSY	1
12	C1192Y01	ALUMINUM	1
13	L411271	SHOCK ABSORBER	4
14	L41620	SPRING FASTENER	2
15	0-3187013-0-01	PROJECTOR MOTOR	1
16	0-1404878-0-01	HEAT SINK REWORK	1
17	L424961	DARLINGTON POWER TRANSIS	1
18	0-3204003-0-01	INS, POWER SEMICONDUCTOR	1
19	0-3204002-0-01	TO-3 CASE INSULTNG COVER	1
20	L422417	TRANSISTOR SOCKET	1
21	BLANK		
22	0-3237004-0-01	PCB CONN CARD GUIDE	1
23	0-2302202-0-01	CONTROL BOARD	1
24	0-3237004-0-02	PCB CONN CARD GUIDE	1
25	BLANK		
26	A9297Y02	COPPER WIRE, 18AWG	8
27	A0036001	1/4-20 X 1/2 HHCS	2
28	A0061008	1/4 MEDIUM LOCK WASHER	6
29	A0055009	1/4-20 HEX NUT	2
30	A0050053	10-24 X 3/8 PL RD HD MS	6
31	A0059025	10 MEDIUM PLTD FL WASH	18
32	A0050077	1/4-20 X 5/8 RD HD MS	4
33	A0061006	10 PLATED LOCK WASHER	16

REVISIONS

NO	ER	DESCRIPTION	DR	CK	APP	MF
A	13039 .80	NEW RELEASE	PJG			
B		NO CHANGE				

IRE/SURFACE

ASSEMBLY DESCRIPTION

ER
DR
CK
APP
MF

Fairmont Tamper™
2401 Edmund Road-Box 20
Cayce-West Columbia,
South Carolina 29171-0020
(803) 822-9160

DWG NO 0-2100861-0-10
SHEET 1
CONT ON 2
DESCRIPTION (24) SURFACE PROJECTOR ASSY
DRAWN PJG
DATE 05-03-04
CHECKED JOC
DATE 05-25-04
APP JOC
DATE 05-25-04
APP
DATE

SHEET 1
CONT ON 2
LAST ECR 13081 .18
CHECKED dvan
DATE 2-Sep-05
DWG NO 0-2100861-0-10

PARTS LIST

ITEM NO	PART NUMBER	DESCRIPTION	QUANTITY
34	A0041004	6-32 X 1/2 SOC HD CS GR8	2
35	A0059024	6 MEDIUM PLATED FL WASH	3
36	A0052006	6-32 X 1/4 PL FL HD MS	4
37	A0050102	5-40 X 1/2 PL RD HD MS	5
38	A0061003	5 PLATED LOCK WASHER	5
39	BLANK		
40	BLANK		
41	A0050025	6-32 X 1/2 PL RD HD MS	2
42	A0061004	6 PLATED LOCK WASHER	4
43	BLANK		
44	A0071125	4-40 X 1/4 PL HHCS	4
45	A0061002	4 PLATED LOCK WASHER	6
46	BLANK		
47	BLANK		
48	BLANK		
49	BLANK		
50	BLANK		
51	BLANK		
52	A0059001	1/4 MEDIUM FLAT WASHER	2
53	A0050076	1/4-20 X 1/2 RD HD MS	4
54	L422468	POLARIZING KEY	2
55	L422146	SHRINK TUBING,1/8"	1
56	A0071136	10-24 X 3/4 PL HHCS	4
57	A0055006	10-24 PLATED HEX NUT	4
58	BLANK		
59	0-3152004-0-06	BRIDGE RECTIFIER	1
61	0-2306408-0-01	CONTROL BOARD	1
63	A0055039	10-24 PLATED HEX NUT	6
64	A0050094	10-24 X 3-1/2 PL RD HDMS	2
65	A4553X01	BRACKET,MOTOR	1
66	BLANK		

ASSEMBLY IDENTIFIER

DWG NO 0-2100861-0-10

SHEET 2 CONT ON 3

DESCRIPTION (24) SURFACE PROJECTOR ASSY

DRAWN PJG DATE 05-03-04

CHECKED JOC DATE 05-25-04

APP JOC DATE 05-25-04

APP DATE

SHEET 2 CONT ON 3

LAST ECR 13081 .18

CHECKED GVGN DATE 2-Sep-05

DWG NO 0-2100861-0-10

REVISIONS

NO	ER	DESCRIPTION	DR	CK	APP	MF
A	13039 .80	NEW RELEASE	PJG			
B		NO CHANGE				

IRE/SURFACE

ASSEMBLY DESCRIPTION

ER
DR
CK
APP
MF

Fairmont Tamper™
2401 Edmund Road-Box 20
Cayce-West Columbia,
South Carolina 29171-0020
(803) 822-9160

PARTS LIST

ITEM NO	PART NUMBER	DESCRIPTION	QUANTITY
67	BLANK		
69	BLANK		
70	BLANK		
71	A0050008	4-40 X 1/4 PL RD HD MS	2
72	A0055002	4-40 PLATED HEX NUT	2
73	N/A	BRASS SHIM STOCK	REF
74	BLANK		
75	BLANK		
76	BLANK		
77	A0050057	10-24 X 7/8 PL RD HD MS	1
78	A0055006	10-24 HEX NUT	1

ASSEMBLY IDENTIFIER

DWG NO 0-2100861-0-10

SHEET 3 CONT ON -

DESCRIPTION (24) SURFACE PROJECTOR ASSY

DRAWN PJG DATE 05-03-04

CHECKED JOC DATE 05-25-04

APP JOC DATE 05-25-04

APP DATE

REVISIONS

NO	ER	DESCRIPTION	DR	CK	APP	MF
A	13039 .80	NEW RELEASE	PJG			
B	13081 .18	ADDED ITEMS 77 & 78	CJW	JBR	JBR	

IRE/SURFACE

ASSEMBLY DESCRIPTION

ER
DR
CK
APP
MF

SHEET 3 CONT ON - LAST ECR 13081 .18 CHECKED dvan DATE 2-Sep-05 DWG NO 0-2100861-0-10

Fairmont Tamper™
2401 Edmund Road-Box 20
Cayce-West Columbia,
South Carolina 29171-0020
(803) 822-9160

ENG.DWG.NO. 0-2100861-0-10

REVISIONS							
NO	ER	DESCRIPTION	ZONE	DR	CK	APP	MF
A	13039 .80	NEW RELEASE		PJG			
B	13081 .18	ADDED ITEMS 77 & 78.		CJW	JBR	JBR	

TOP VIEW WITHOUT COVER

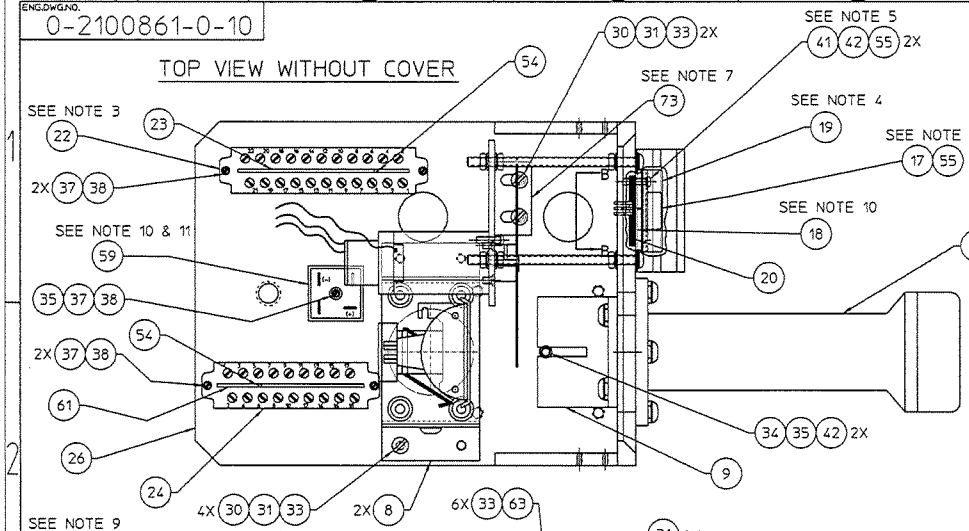

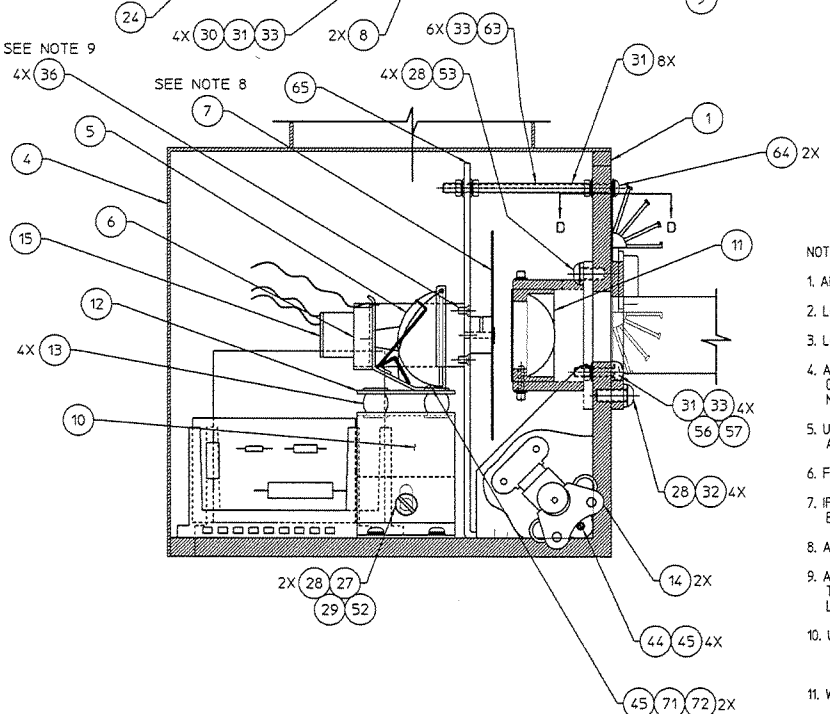

SECTION A - A

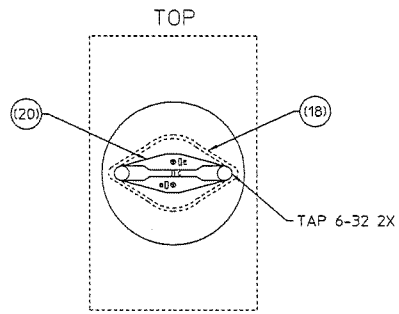

VIEW "B - B"
ENLARGED FOR MOUNTING

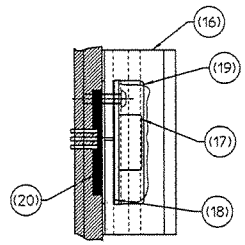

VIEW "D - D"
ENLARGED FOR MOUNTING

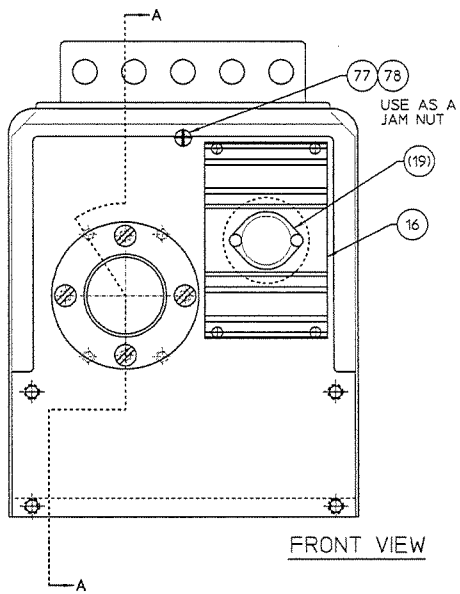

FRONT VIEW

(60) PROJ. ASS'Y SCHEMATIC

(62) PROJECTOR SET-UP

(68) WIRE DIAGRAM

NOTES:

1. ALL INTERNAL WIRING TO BE #18 AWG.
2. LOCATE ITEM #54 BETWEEN TERMINALS #5 & #6.
3. LOCATE ITEM #54 BETWEEN TERMINALS #4 & #5.
4. AFTER INSTALLING ITEM #17 USE SILICONE FOR GLUING ITEM #19 OVER THE FACE OF ITEM #17 MAKING WATER TIGHT SEAL.
5. USE ITEM #55 TO INSULATE TRANSISTOR SCREWS AND LEADS.
6. FINAL TESTING REQUIRED.
7. IF NECESSARY, ADD ITEM #73 (SHIM) TO MOTOR BRACKET TO AID IN FOCUSING.
8. ADD LOCTITE TO CHOPPER BLADE SET SCREWS.
9. APPLY LOCTITE TO 4 MOUNTING SCREWS FOR THE CHOPPER BLADE MOTOR. LOCTITE 0-3040000-0-06
10. USE THERMAL JOINT COMPOUND (L422653) ON BOTH SIDES OF INSULATOR, AND ON BOTTOM SIDE OF RECTIFIER.
11. WHEN INSTALLING RECTIFIER, INSTALL AS SHOWN OBSERVING POLARITY (-), (+).

PLOT @ -1.25

FIG NO.	ITEM NO.	PART NUMBER	DESCRIPTION AND MATERIAL SIZE (REF.ONLY)	QTY

IMPLIED TOLERANCES
ALL DIMENSIONS ARE IN INCHES-TOLERANCE UNLESS OTHERWISE SPECIFIED

NOMINAL SIZE RANGE		PLUS OR MINUS			NOMINAL SIZE RANGE		PLUS OR MINUS		
OVER	TO	FRACTION	2 PLACE DECIMAL	3 PLACE DECIMAL	OVER	TO	FRACTION	2 PLACE DECIMAL	3 PLACE DECIMAL
-	1	1/64	.01	.003	6	24	3/64	.03	.006
1	6	1/32	.02	.005	24	-	1/16	.05	.010

ANGULAR DIMENSIONS PLUS OR MINUS 1 DEGREE

ALL MACHINED SURFACES TO HAVE A SURFACE FINISH OF 125 MICROINCHES UNLESS OTHERWISE SPECIFIED.

WELDING SPECIFICATION

UNLESS OTHERWISE SPECIFIED ALL WELDS SHOULD ADHERE TO FAIRMONT TAMPER WELDING SPECIFICATION NO. 101

WEIGHT LBS.

3rd ANGLE PROJECTION

DO NOT SCALE

SHEET 1 CONT. — OF —

DESCRIPTION (2)

SURFACE PROJECTOR ASSY

DRAWN PJG	DATE 05-03-04	MACHINE TYPE IRE/SURFACE
CHECKED JOC	DATE 05-25-04	
APPROVED JOC	DATE 05-25-04	
APP-MFG	DATE	
LAST EDIT 13081 .18	CHECKED dixon	ENGLDWG.NO. 0-2100861-0-10
	DATE 2-Sep-05	

Fairmont Tamper 2401 Edmund Road-Box 20 Cayce-West Columbia, South Carolina 29171-0020 (803) 822-9160

THIS DOCUMENT CONTAINS PROPRIETARY INFORMATION AND SUCH INFORMATION MAY NOT BE DISCLOSED TO OTHERS FOR ANY PURPOSE OR USED FOR MANUFACTURING PURPOSES WITHOUT THE WRITTEN PERMISSION OF FAIRMONT TAMPER.

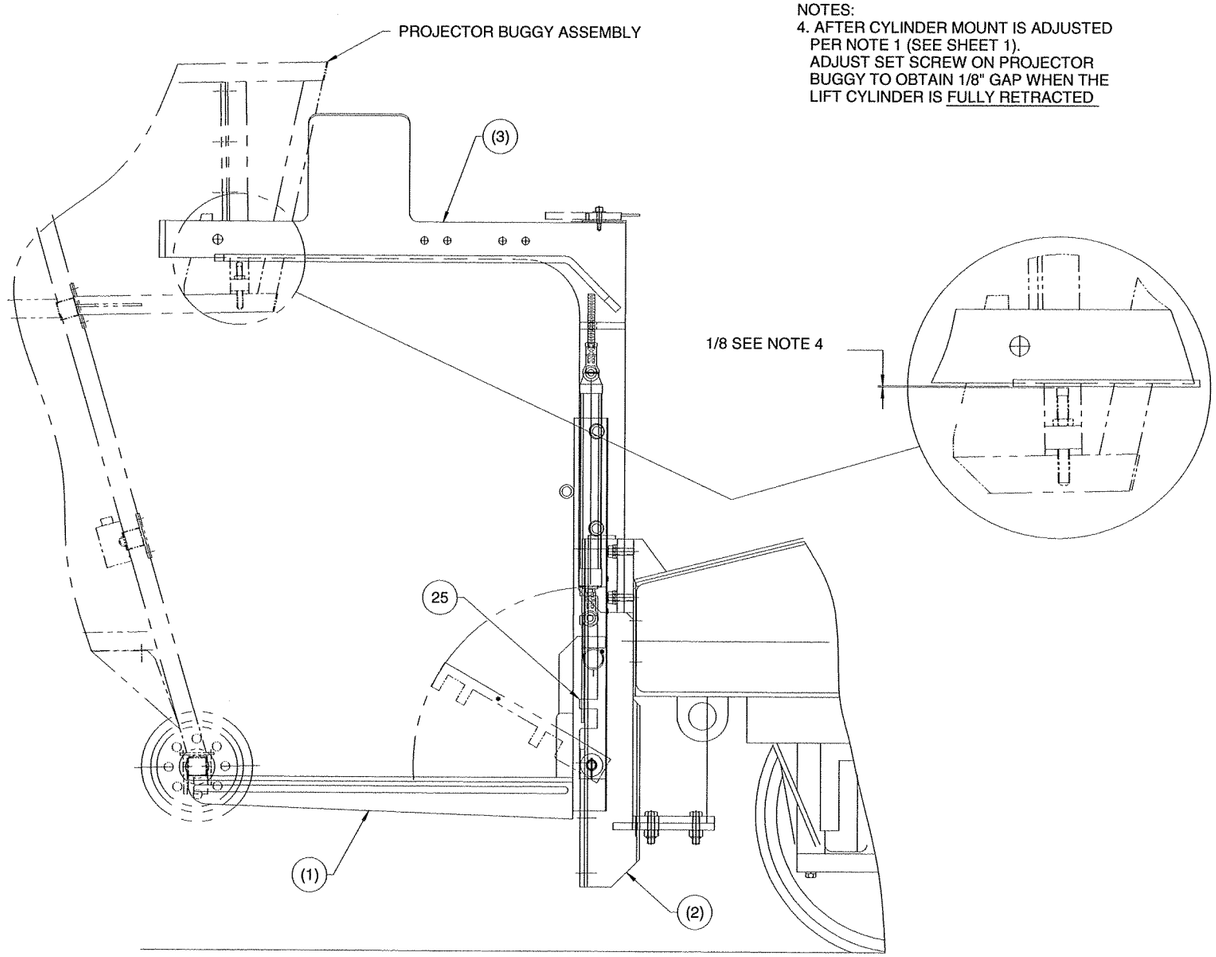

NOTES:
4. AFTER CYLINDER MOUNT IS ADJUSTED PER NOTE 1 (SEE SHEET 1). ADJUST SET SCREW ON PROJECTOR BUGGY TO OBTAIN 1/8" GAP WHEN THE LIFT CYLINDER IS FULLY RETRACTED

ITEM NO.	PART NO.	DESCRIPTION	QTY
1	4013216	BUGGY LIFT WELDMENT	1
2	4013219	BRACE WLDT	1
3	H5932VAA	BUGGY SUPPORT WELDMENT	1
4	G7733YAA	BUGGY LIFT CYLINDER ASSY	1
5	0-3304057-0-07	TEE, -4/-4/-4 SW RUN USE	1
6	L40984	EXTENSION SPRING	1
7	0-3015004-0-01	HITCH PIN	1
8	0-3015005-0-05	HAIR PIN COTTER	1
9	A0036032	5/16-18 X 3/4 CAPSCREW USE	4
10	A0036219	3/4-10 X 2 1/4 CAPSCREW	12
11	A0036222	3/4-10X3 CAPSCREW USE F007986	4
12	A0042012	5/16-18X1 1/2 FL SOC ALL	12
13	A0043033	1/4-20X3/4 SOCHDSCRNLOK	2
14	A0043035	1/4-20X1 1/4SOCHDSCRNLOK	2
15	A0052039	5/16-18X3/4 FLHD MSCR	12
16	A0055023	3/4-16 HEX NUTS	2
17	A0056013	3/4-16HEX JAM NUTS USE F010972	1
18	A0059005	1/2 PL WSHR USE F001267	2
19	A0059010	1 MED PL WSHR USE F013412	2
20	A0060018	3/4 SAE WSHR USE F002929	26
21	A0061009	5/16 MED LOCK WSHR USE F009546	4
22	A0061022	3/4 MED LOCKWASHER USE F001354	12
23	A0068014	1/8 X1 1/4 COTTER PIN USE	2
24	A0068025	3/16 X 2 COTTER PIN USE	2
25	A7367X01	STORAGE BAR	2
26	A7056X01	SLIDE PAD	4
27	A7051W01	SLIDE PAD	2
28	0-3470019-0-14	DBL ACT AIR CYL	5
29	H5943X01	LATCH	1
30	B8821Y01	BUGGY LIFT NAMEPLATE	1
31	A5443Y03	FITTING,COMPRESS'N TUBE	15
32	C7417XAA	PROJECTOR BUGGY LIFT	1
33	C8837Y02	DOOR HOLDER	2
34	D3692Y01	STOP PAD	1
35	D5507T09	PIN W/HOLES	1
36	0-3011001-0-90	3/8-16 LOCKNUT STAINLESS STEEL	3
37	L40388	NUT ELASTIC STOP 5/16-18	12
38	A5443Y04	FITTING, COMPRESS'N TUBE	5
39	L410636	THIMBLE CABLE	1
40	L41133	ROPE, AIRCRAFT STL. WIRE	4
41	L41148	3/4-10 LOCKNUT CHAD PLATE	4
42	L420681	SWAGE SLEEVE	2
43	Z686508	CENTER JACK RING	1
44	Z752500-026	1/2 X 1 1/4 HEX SOC SHO	3
45	Z686548	CABLE GUIDE	1
46	L423094	HOSE, 1/4 LP	15
47	D4741Y01	PUSH/PULL AIR VALVE	5
48	4000334	LOCK PIN	4
49	L422845	MINIATURE PRESSURE W/GAU	1
50	L423261	HOSE END, -4 JIC SW	2
51	L423607	NYLON TUBING	250
52	A5443Y07	FITTING, COMPRESS'N TUBE	2
53	L411385	PIPE, JIC/MALE USE F012318	1
54	4000335	LOCK PIN	1
55	A5443Y05	COMPRESSION FITTING	4
56	A5443Y20	FITTING 90 DEGREE-1/8NPT	1
57	0-3014001-0-23	ROD CLEVIS W/PIN	5
58	0-3410004-0-02	SHUTTLE VALVE	1
59	A1302Y03	FITTING	1
60	A5443Y10	TUBE FITTING	2

CONFIDENTIAL
©COPYRIGHT 2000 HARSCO TRACK TECHNOLOGIES. THIS DRAWING OR DOCUMENT IS THE PROPERTY OF HARSCO TRACK TECHNOLOGIES. MATERIAL CONTAINED IS CONFIDENTIAL INFORMATION, TRADE SECRET INFORMATION, AND/OR KNOW HOW THAT IS THE PROPERTY OF HARSCO TRACK TECHNOLOGIES. BY ACCEPTING THIS DRAWING OR DOCUMENT, THE RECIPIENT AGREES (1) NOT TO PRODUCE, OR OTHERWISE MAKE AVAILABLE TO ANY THIRD PARTY, ANY PART OF THE INFORMATION CONTAINED OR REFERENCED THEREIN, TO ANY THIRD PARTY AND (2) NOT TO REPRODUCE OR USE THE DRAWING OR DOCUMENT TO MANUFACTURE ANY APPARATUS OR DEVICE, WITHOUT THE PRIOR WRITTEN AUTHORIZATION OF HARSCO TRACK TECHNOLOGIES

SOLID EDGE DRAWING

UNLESS OTHERWISE SPECIFIED ALL DIMENSIONS ARE IN INCHES - TOLERANCE UNLESS OTHERWISE SPECIFIED

Fractions	Decimals	Angles	Machined Surfaces
±1/64	±.010	±1°	125

Decimal Places	Plus	Minus
1	.05	.05
2	.02	.02
3	.010	.010
4	.005	.005

Angle Decimal Places	Plus	Minus
0	1°	1°
1	.5°	.5°
2	.25°	.25°

Machined Surfaces	Plus	Minus
125	125	125
250	250	250
500	500	500
1000	1000	1000

UNLESS OTHERWISE SPECIFIED ALL MACHINED SURFACES TO HAVE A MAXIMUM OF 125 MICROINCHES

FIRST ANGLE PROJECTION

UNLESS OTHERWISE SPECIFIED ALL NOTES TO BE ON THE LAYOUT OR MECHANICAL DRAWING

CHANGE	R/L	REVISION
101010	A	NEW RELEASE

DATE 4/19/07

Description: BUGGY LIFT SYSTEM

Drawing Number: ----------

Model: 4013600.dft

Project: MARK IV

Drawn: JBR 3/28/06

Checked: JBR 4/10/07

Approved: JBR 4/19/07

Part Number: 4013600

Size: E

Sheet: 2 of 2

HTT Harsco Track Technologies
Harsco
Columbia, SC

Plotted by jrowell on 5/17/2007 4013600.dft

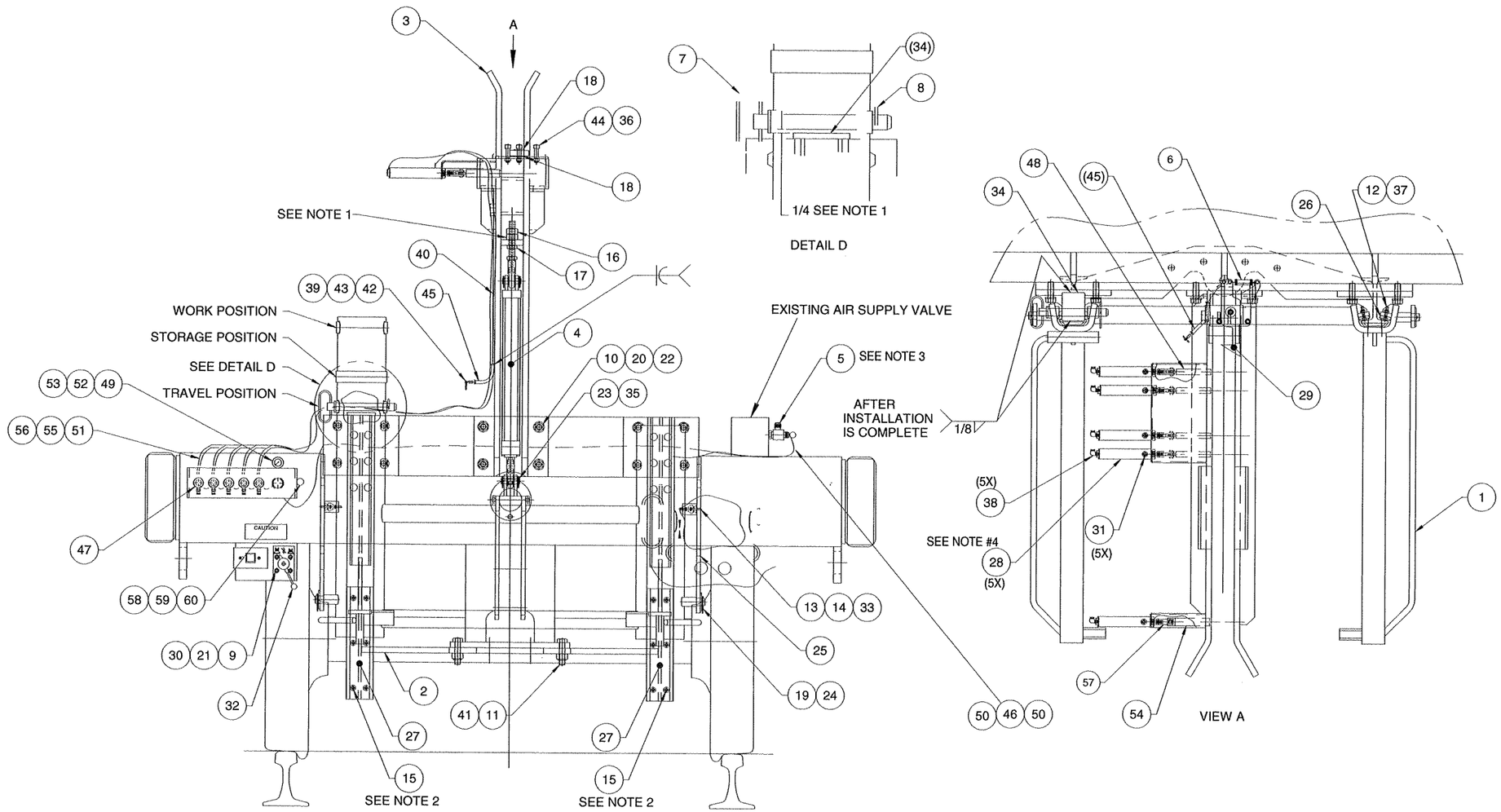

NOTES:

1) AFTER STOP PAD, IT-34, IS WELDED, ADJUST THE LIFT CYLINDER MOUNT TO OBTAIN 1/4" GAP BETWEEN HITCH PIN, IT-7 AND STOP PAD, IT-34 WHEN THE LIFT CYLINDER IS FULLY RETRACTED

2) APPLY LOCTITE, 0-3040000-0-06, (LOCTITE 242) TO SCREW THREADS USED TO FASTEN LOWER SLIDE PADS

3) REPLACE EXISTING FITTING FROM AIR SUPPLY WITH IT #5

SEE PARTS LIST ON SHEET 2

CONFIDENTIAL
©COPYRIGHT 2003 HARSCO TRACK TECHNOLOGIES. THIS DRAWING OR DOCUMENT IS THE PROPERTY OF HARSCO TRACK TECHNOLOGIES AND EMBODIES CONFIDENTIAL INFORMATION, TRADE SECRET INFORMATION, AND COPYRIGHTED MATERIAL OF HARSCO TRACK TECHNOLOGIES. BY ACCEPTING THIS DRAWING OR DOCUMENT, THE RECIPIENT AGREES (1) NOT TO PROVIDE, OR OTHERWISE MAKE AVAILABLE, THE DRAWING OR DOCUMENT TO ANY THIRD PARTY, (2) NOT TO REPRODUCE OR DUPLICATE THE SAME, (3) NOT TO USE SUCH DRAWING AND NOT TO PROVIDE OR USE THE DRAWING OR DOCUMENT TO MANUFACTURE ANY APPARATUS OR DEVICE, WITHOUT THE PRIOR WRITTEN AUTHORIZATION OF HARSCO TRACK TECHNOLOGIES

SOLID EDGE DRAWING

APPLIED TOLERANCES
ALL DIMENSIONS IN INCHES - TOLERANCE UNLESS OTHERWISE SPECIFIED

Decimal		Bend		Angular		Radius		Chamfer	
±0.01	±0.5	±0.06	±0.02	±0.5°	±0.5°	±0.02	±0.02	±0.02	±0.02
0.1	5	10	.01	1	1.0	.1	.1	.1	.1
0.4	24	24	.05	.25	1.5	3.0	.1	.2	
24		24		0.5		6.0	.15	.25	

CHANGE	REV	REVISION	DATE
101010	A	NEW RELEASE	4/10/07

DESCRIPTION: BUGGY LIFT SYSTEM
Drawing Number: ----------
Model: 4013600.dft
Scale:
Material:
Drawn: JKNR 4/10/07
Checked: JBR
Approved: JBR
PRODUCT TYPE: MARK IV

HTT
Harsco Track Technologies
Harsco
Columbia, SC

Part Number: 4013600 | Size: E | Sheet: 1 of 2

Plotted by jrowell on 5/17/2007 4013600.dft

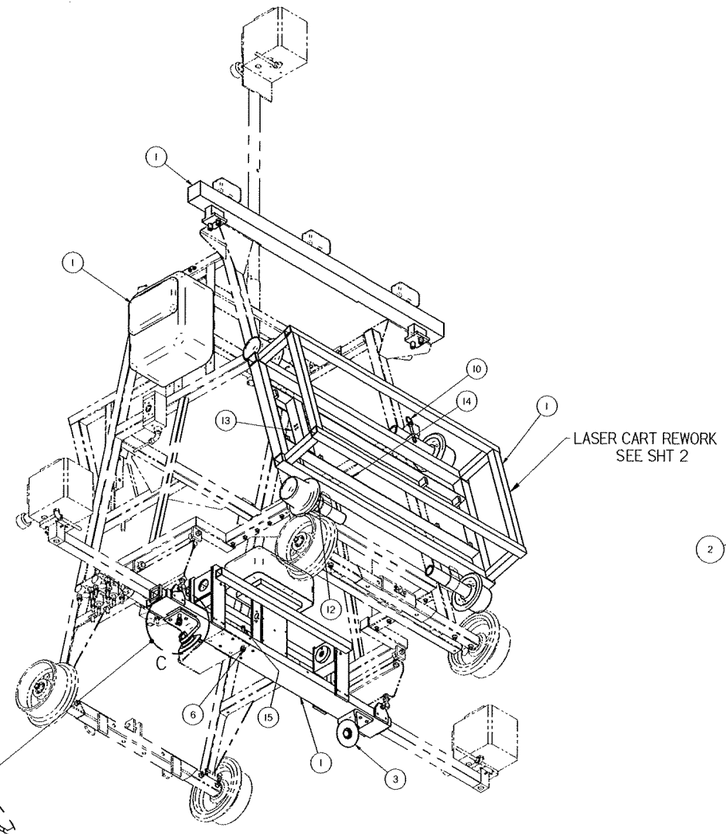

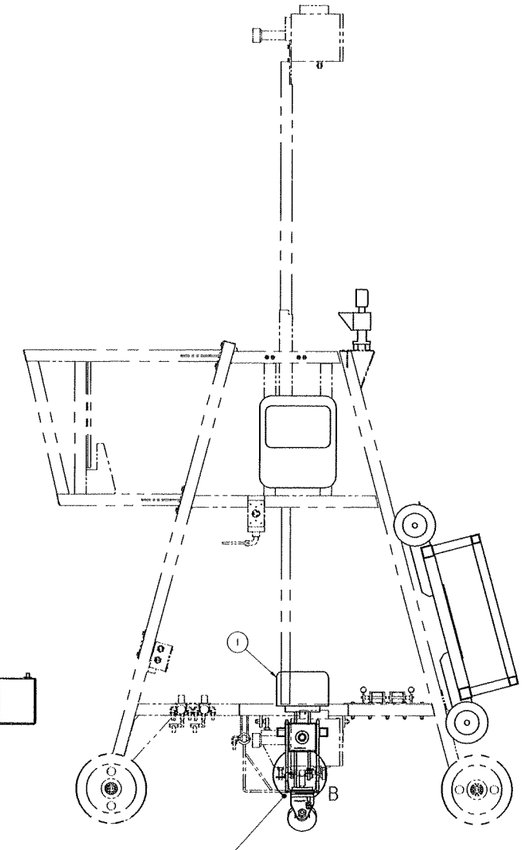

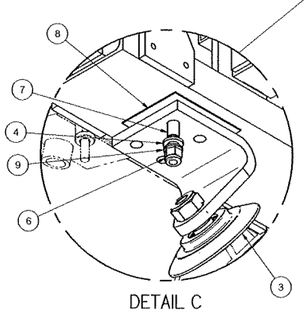

DETAIL C

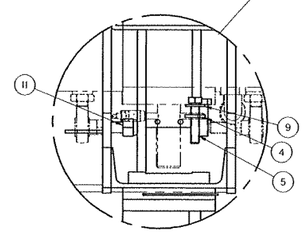

DETAIL B

Item Number	Part Number	Description	Quantity
1	0-2407897-0-06	LASER RAIL ALIGN SYSTEM	1
2	0-3181001-0-01	Battery 12V 53 Amp	1
3	4013603	BIAS WHEEL ASSY 42 GA	2
4	Z750057	INSULATING WASHER	16
5	A0036067	3/8-16 X 1 3/4 HHCS GR 5	8
6	L40387	LOCKNUT, 3/8-16, HEAVY	12
7	Z685611	INSULATING TUBE	8
8	Z750036	INSULATING PLATE	2
9	A0060013	3/8 SAE WASHER	16
10	0-3015004-0-08	HITCH PIN, 3/8 DIA	2
11	0-3011001-0-09	1/2-20 ESNA NUT	4
12	4013641	AXLE PLATE AL	8
13	4013640	CLAMP MTG TUBE	2
14	4013643	STOP TAB	4
15	A0036312	3/8-16 x 1 3/8 HHCS	4

CONFIDENTIAL
©COPYRIGHT 2001 HARSCO TRACK TECHNOLOGIES. THIS DRAWING OR DOCUMENT IS THE PROPERTY OF HARSCO TRACK TECHNOLOGIES AND CONTAINS CONFIDENTIAL INFORMATION, TRADE SECRET INFORMATION AND PROCESSES. THAT IS THE PROPERTY OF HARSCO TRACK TECHNOLOGIES. BY ACCEPTING THIS DRAWING OR DOCUMENT, THE RECIPIENT AGREES (1) NOT TO PROVIDE, OR OTHERWISE MAKE AVAILABLE THE DRAWING OR DOCUMENT, OR ANY INFORMATION OR KNOWHOW CONTAINED THEREIN, TO ANY THIRD PARTY WITHOUT THE PRIOR WRITTEN AUTHORIZATION OF HARSCO TRACK TECHNOLOGIES, (2) NOT TO USE OR REPRODUCE OR USE THE DRAWING OR DOCUMENT FOR MANUFACTURING AND SUPPLYING ANY DEVICE, WITHOUT THE PRIOR WRITTEN AUTHORIZATION OF HARSCO TRACK TECHNOLOGIES.

SOLID EDGE DRAWING

BASIC TOLERANCES — ALL DIMENSIONS ARE IN INCHES — TOLERANCE ANGLE CHANGE OF SIN=1/60

CHANGE	R/L	REVISION	DATE
ECN-101026	A	RELEASE	

Description: LASER LINER KIT 42 GA
Part Number: ----------
Model: 4013684.asm
Mass: 0.0 lbm
Material: ----------
Finish: ----------
Drawn: MK VI NZ 42 — Date: 10/10/05
Approved: JGR — Date: JGR
Part Number: 4013684 — Size: E — Sheet: 1 of 2

HTT
Harsco Track Technologies
Harsco
Columbia, SC

Plotted by rowell on 5/17/2007 4013684.dft

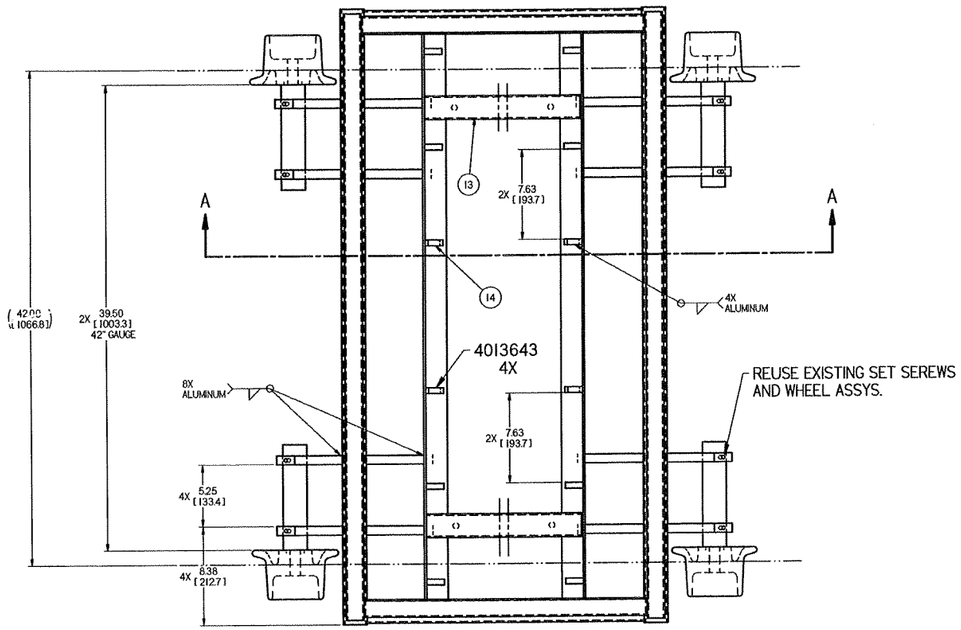

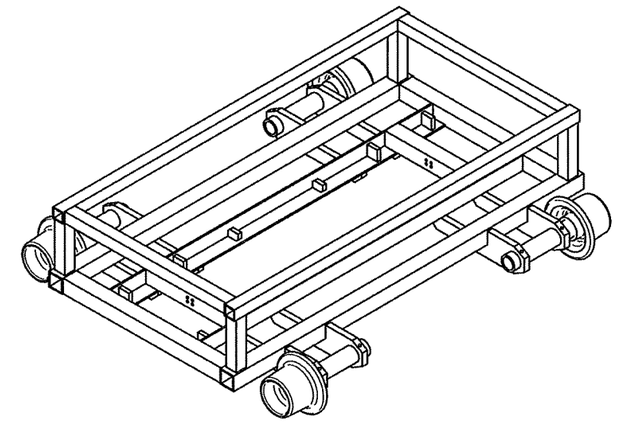

NOTE:
CART IS AL ALUMINUM PARTS:

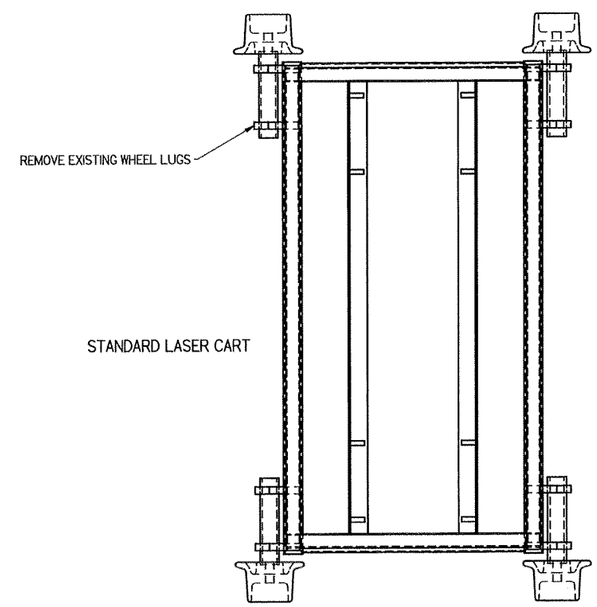

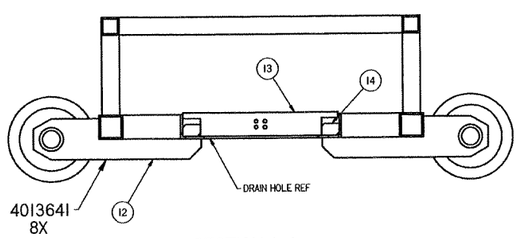

SECTION A-A

CONFIDENTIAL
© COPYRIGHT 2001 HARSCO TRACK TECHNOLOGIES. THIS DRAWING OR DOCUMENT IS THE PROPERTY OF HARSCO TRACK TECHNOLOGIES AND EMBODIES CONFIDENTIAL INFORMATION, TRADE SECRET INFORMATION, AND/OR COPYRIGHTED MATERIAL OF HARSCO TRACK TECHNOLOGIES. BY ACCEPTING THIS DRAWING OR DOCUMENT, THE RECIPIENT AGREES (1) NOT TO PROVIDE, OR OTHERWISE MAKE AVAILABLE THE DRAWING OR DOCUMENT, OR ANY INFORMATION OR IDEAS HERE EMBODIED THEREIN, TO ANY THIRD PARTY AND (2) NOT TO RE-PRODUCE OR USE THE DRAWING OR DOCUMENT, OR ANY INFORMATION OR IDEAS HERE EMBODIED THEREIN, WITHOUT THE PRIOR WRITTEN AUTHORIZATION OF HARSCO TRACK TECHNOLOGIES.

SOLID EDGE DRAWING

UNLESS OTHERWISE SPECIFIED ALL DIMENSIONS ARE IN INCHES - TOLERANCES ARE CONSTRUCTION STANDARD

Decimal	Inch Tolerance		Metric Tolerance	
Places	Plus	Minus	Plus	Minus
1	.1	.1	.1	.1
2	.03	.03	.05	.05
3	.010	.010	.025	.025
4	.005	.005	.013	.013
5	.002	.002	.005	.005

Angular	Inch Tolerance	Metric Tolerance
1	1.0	1.0
2	.5	.5
3	.25	.25

UNLESS OTHERWISE SPECIFIED ALL MACHINED SURFACES TO BE 125 RMS OR BETTER

CHANGE	REV	REVISION	DATE
ECN-00028	A	RELEASE	

Description: LASER LINER KIT 42 GA
Drawing Number: ----------
Name: 4013684.asm
Weight: 0.0 lbm
Date:
Part Type: MK VI NZ 42
Drawn: AQUITS 17 APR 07
Checked: Eng. JBR
Date: Mfg. JBR
Part Number: 4013684
Rev: E
Sheet: 2 of 2

HTT
Harsco Track Technologies
Harsco
Columbia, SC

Plotted by qquits on 4/21/2007 4013684.dft

CONFIDENTIAL

© COPYRIGHT 2001 HARSCO TRACK TECHNOLOGIES. THIS DRAWING OR DOCUMENT IS THE PROPERTY OF HARSCO TRACK TECHNOLOGIES AND EMBODIES CONFIDENTIAL INFORMATION, TRADE SECRET INFORMATION, AND/OR KNOW-HOW THAT IS THE PROPERTY OF HARSCO TRACK TECHNOLOGIES. BY ACCEPTING THIS DRAWING OR DOCUMENT, THE RECIPIENT AGREES (1) NOT TO PROVIDE, OR OTHERWISE MAKE AVAILABLE, THE DRAWING OR DOCUMENT, OR ANY INFORMATION OR KNOW-HOW EMBODIED THEREIN, TO ANY THIRD PARTY AND (2) NOT TO REPRODUCE OR USE THE DRAWING OR DOCUMENT TO MANUFACTURE ANY APPARATUS OR DEVICE, WITHOUT THE PRIOR WRITTEN AUTHORIZATION OF HARSCO TRACK TECHNOLOGIES.

SOLID EDGE DRAWING

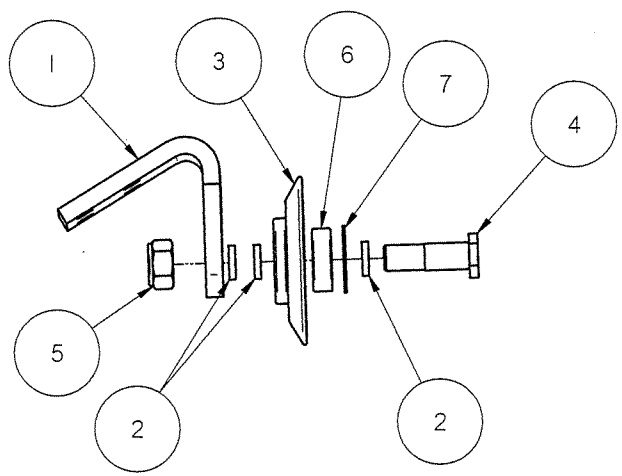

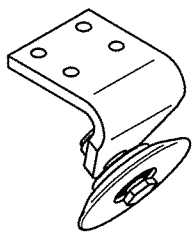

Item Number	Part Number	Description	Quantity
1	4013604	4013604	1
2	Z685275	SPACER	3
3	C1695X01	BIAS WHEEL(60°)	1
4	Z685273	WHEEL AXLE	1
5	L41764	LOCKNUT, 3/4-10, PLATED	1
6	L40153	BALL BEARING	1
7	L410291	RETAINING RING	1

IMPLIED TOLERANCES

ALL DIMENSIONS ARE IN INCHES - TOLERANCE UNLESS OTHERWISE SPECIFIED

NOMINAL SIZE RANGE		INCH PLUS OR MINUS		NOMINAL SIZE RANGE		METRIC PLUS OR MINUS	
OVER	TO	2 PLACE DECIMAL	3 PLACE DECIMAL	OVER	TO	1 PLACE DECIMAL	2 PLACE DECIMAL
0	6	.03	.005	0	150	.8	.13
6	24	.04	.008	150	600	1.0	.20
24	-	.06	.010	-	600	1.5	.25

UNLESS OTHERWISE SPECIFIED ALL MACHINED SURFACES WILL HAVE: A SURFACE FINISH OF 125 MICROINCHES ANGULAR TOLERANCE OF ± .50° CONCENTRICITY WITHIN .010

THIRD ANGLE PROJECTION

UNLESS OTHERWISE SPECIFIED ALL WELDS SHOULD ADHERE TO THE LATEST HTT WELDING SPECIFICATION 101

CHANGE	R/L	REVISION	DATE
ECN-101026	A	RELEASE	------

Description: BIAS WHEEL ASSY 42 GA

Drawing Number: ----------

Machine Type: MK VI NZ 42

Model: 4013603.asm

Drawn: aouzts

Date Drawn: 9 APR 07

Weight: 7.1 lbm

Scale:

APVD Desg: JBR

APVD ChEng: JBR

Mat'l

HTT
Harsco Track Technologies
Harsco
Columbia, SC

Part Number: 4013603

Size: B

Sheet: 1 of 1

Plotted by aouzts on 6/25/2007 4013603.dft

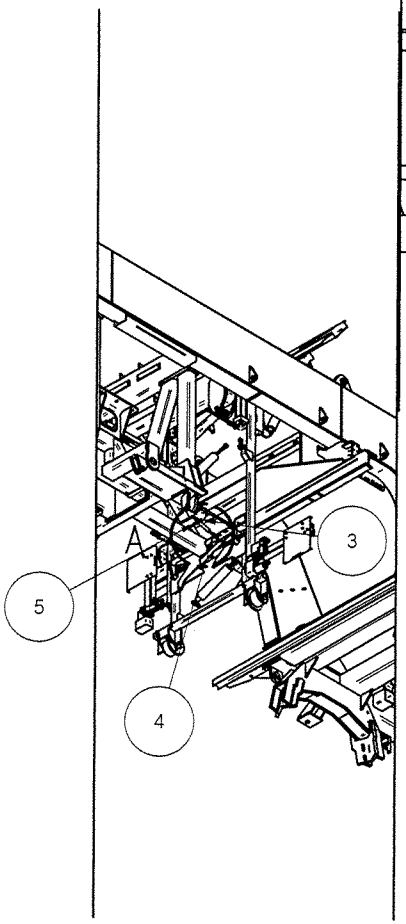

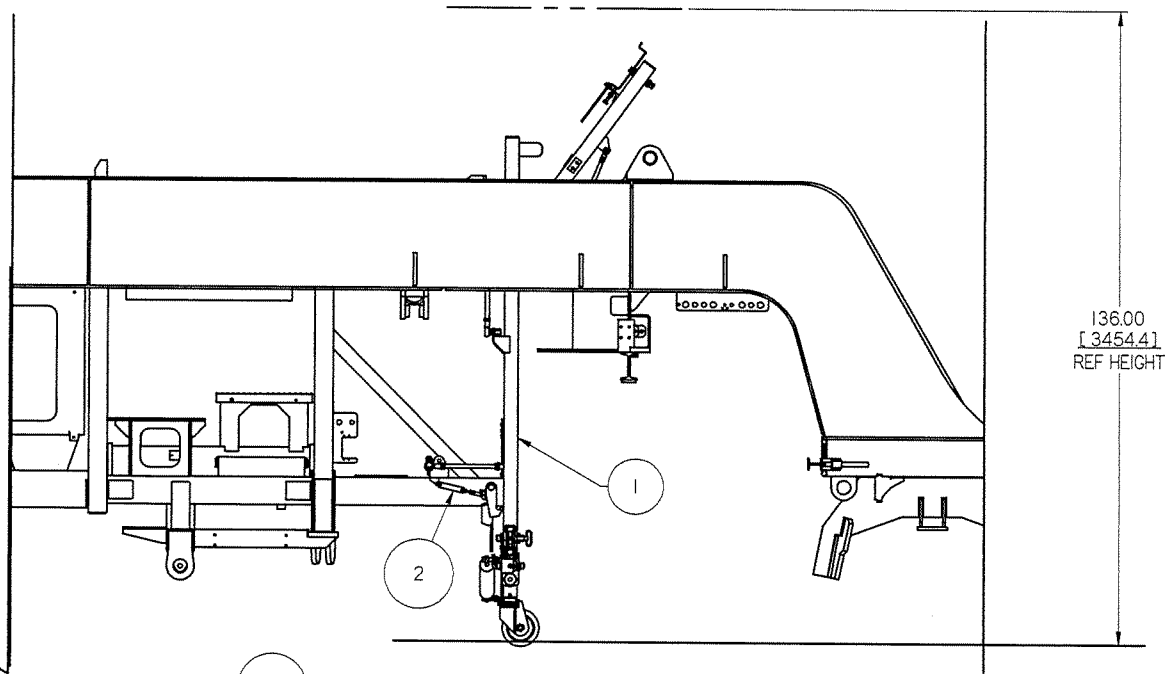

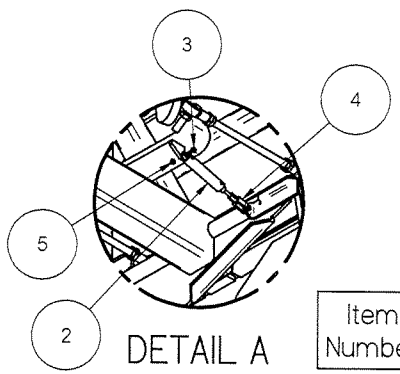

Item Number	Part Number	Description	Quantity
1	4013791	S/B ASSY, TILT	1
2	A4771Y04	AIR CYLINDER	1
3	F001213	HHDCPSCR 1/4-20 X 1 1/4	1
4	0-3014001-0-01	CLEVIS W/PIN	1
5	F013588	1/4-20 ESNA LOCKNUT - NE	1

SOLID EDGE DRAWING

CONFIDENTIAL
© COPYRIGHT 2001 HARSCO TRACK TECHNOLOGIES. THIS DRAWING OR DOCUMENT IS THE PROPERTY OF HARSCO TRACK TECHNOLOGIES AND EMBODIES CONFIDENTIAL INFORMATION, TRADE SECRET INFORMATION, AND/OR KNOW-HOW THAT IS THE PROPERTY OF HARSCO TRACK TECHNOLOGIES. BY ACCEPTING THIS DRAWING OR DOCUMENT, THE RECIPIENT AGREES (1) NOT TO PROVIDE, OR OTHERWISE MAKE AVAILABLE, THE DRAWING OR DOCUMENT, OR ANY INFORMATION OR KNOW-HOW EMBODIED THEREIN, TO ANY THIRD PARTY AND (2) NOT TO REPRODUCE OR USE THE DRAWING OR DOCUMENT TO MANUFACTURE ANY APPARATUS OR DEVICE, WITHOUT THE PRIOR WRITTEN AUTHORIZATION OF HARSCO TRACK TECHNOLOGIES.

IMPLIED TOLERANCES
ALL DIMENSIONS ARE IN INCHES - TOLERANCE UNLESS OTHERWISE SPECIFIED

NOMINAL SIZE RANGE		INCH PLUS OR MINUS		NOMINAL SIZE RANGE		METRIC PLUS OR MINUS	
OVER	TO	2 PLACE DECIMAL	3 PLACE DECIMAL	OVER	TO	1 PLACE DECIMAL	2 PLACE DECIMAL
0	6	.03	.005	0	150	.8	.13
6	24	.04	.008	150	600	1.0	.20
24	-	.06	.010	-	600	1.5	.25

UNLESS OTHERWISE SPECIFIED ALL MACHINED SURFACES WILL HAVE:
A SURFACE FINISH OF 125 MICROINCHES
ANGULAR TOLERANCE OF ± .50°
CONCENTRICITY WITHIN .015

THIRD ANGLE PROJECTION

UNLESS OTHERWISE SPECIFIED ALL WELDS SHOULD ADHERE TO THE LATEST HTT WELDING SPECIFICATION 101

CHANGE	R/L	REVISION			DATE
ECN-101010	A	RELEASE			------
ECN-101071	B	IT I WAS 4013470	AO	JBR	16 MAY 97

Description: S/B INSTL
Drawing Number: ----------
Machine Type: MK VI NZ 42
Model: 4013420.asm
Drawn: aouzts
Date Drawn: 7 APR 07
Weight: 0.0 lbm
Scale:
APVD Dsng: JBR
APVD ChEng: JBR
Matl:

HTT
Harsco Track Technologies
Harsco
Columbia, SC

Part Number: 4013420
Size: C
Sheet: 1 of 1

Plotted by aouzts on 6/25/2007 4013420.dft

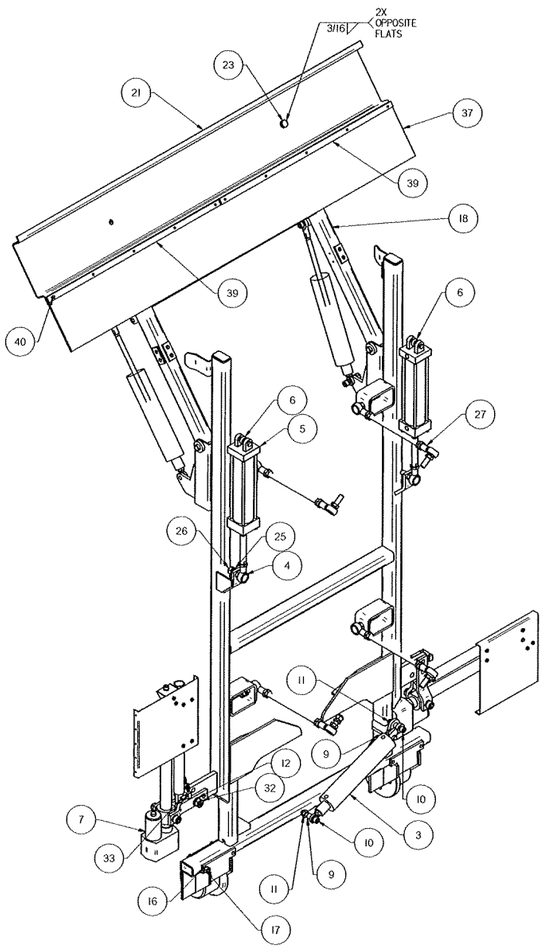

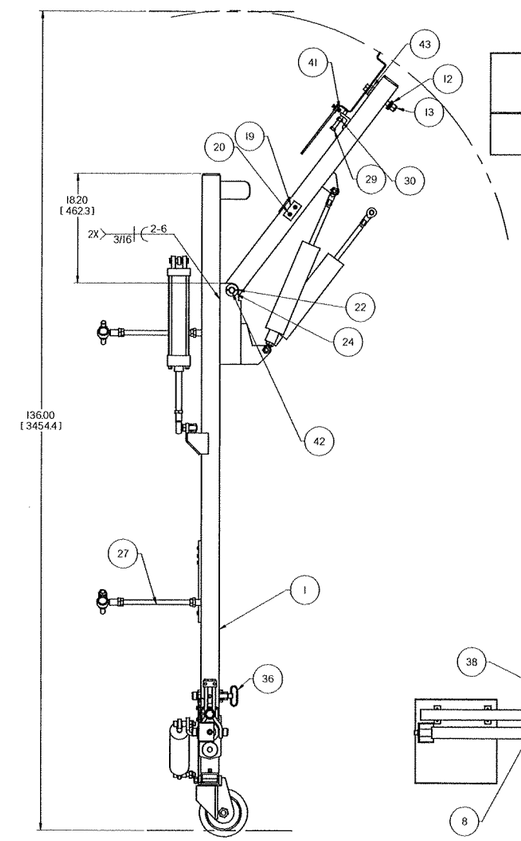

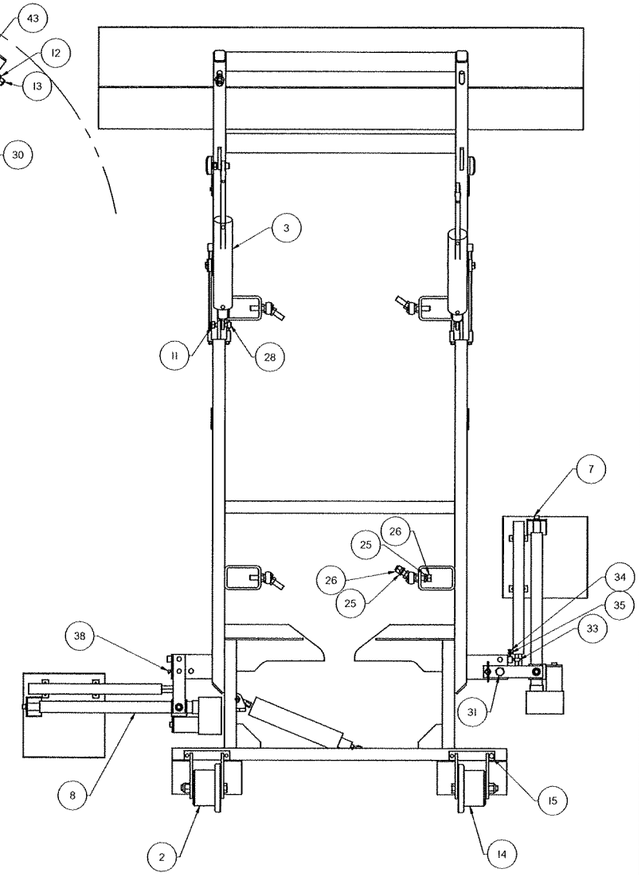

Item Number	Part Number	Description	Quantity
1	4013797	S/B FRAME, LOWER	1
2	A0219WAB	WHEEL ASSY L/H	1
3	0-2303635-0-06	AIR CYL ASSEMBLY	3
4	0-3652048-0-01	ROD END WITH STUD	2
5	C0839Y01	AIR CYL 3 1/4 BORE	2
6	L41811	SPHERICAL BEARING	2
7	D0823WAD	LINEAR FLAG ARM ASSY R/H	1
8	D0823WAC	LINEAR FLAG ARM ASSY L/H	1
9	A0215T46	SPACER	2
10	A0041158	5/8-11 X 3 SOC HD CP SCR	2
11	L41032	LOCKNUT, 5/8, HEX, HEAVY, THIN	10
12	A0060018	3/4 SAE WASHER	4
13	L41088	3/4-16 ESNA NUT	2
14	A0219WAA	WHEEL ASSY	1
15	A0036134	1/2-13 X 4 1/2 HHCS	4
16	A0061013	1/2 MED LOCK WASHER	4
17	A0055016	1/2-13 HEX NUT	4
18	4013792	TOP TILT FRAME	1
19	4013803	NYLON BUMPER	4
20	A0042054	1/4-20 X 3/4 NYLFHSHCS GR 8	8
21	4013804	SHADOW BOARD	1
22	A0068015	COTTER PIN, 1/8 DIA X 1 1/2	4
23	A0036247	3/4-16 X 5 1/4 HH CP SCR	2
24	A0060021	1" SAE WASHER	4
25	A0061022	3/4 MEDIUM LOCKWASHER	8
26	A0055023	3/4-16 HEX NUT	8
27	4004234	GIMBAL ASSY	4
28	A0041154	5/8-11 X 2 SOC HR CP SCR	4
29	A0036161	1/2-20 X 3 1/2 FULTHHHCS	2
30	A0055017	1/2-20 HEX NUT	2
31	A0036213	3/4-10x3 1/4 HHCS	2
32	L41764	LOCKNUT, 3/4-10, PLATED	2
33	A0062038	SOC HD SET SCR 1/2-13 X 1	4
34	A0036004	1/4-20 X 7/8 HH CP SCR	4
35	A0056001	1/4-20 HEX JAM NUT	4
36	A2956Y01	HITCH PIN REWORK	2
37	4013806	S/B LIGHT SHIELD	1
38	L40757	GREASE FITTING, 1/4-28 90 DEG	2
39	G5312Y01	CLAMP STRIP	2
40	A0036005	1/4-20 X 1" HHCS	10
41	L41157	LOCKNUT, 1/4-20, LIGHT	10
42	4013801	1" PIN W/HOLES	2
43	0-3019002-0-07	3/4 HARDENED FL WASHER	4

CONFIDENTIAL
ACCEPTANCE OF THIS DRAWING OR DOCUMENT IS THE PROPERTY OF HARSCO TRACK TECHNOLOGIES. THIS DRAWING OR DOCUMENT IS THE PROPERTY OF HARSCO TRACK TECHNOLOGIES AND CONTAINS CONFIDENTIAL INFORMATION, TRADE SECRET INFORMATION, AND/OR KNOW-HOW THAT IS THE PROPERTY OF HARSCO TRACK TECHNOLOGIES. BY ACCEPTING THIS DRAWING OR DOCUMENT, THE RECIPIENT AGREES (1) NOT TO DISCLOSE OR OTHERWISE MAKE AVAILABLE TO ANY THIRD PARTY ANY INFORMATION OR KNOWLEDGE CONTAINED OR EMBODIED THEREIN, TO ANY THIRD PARTY AND (2) NOT TO USE THE DRAWING OR DOCUMENT TO MANUFACTURE ANY APPARATUS OR DEVICE, WITHOUT THE PRIOR WRITTEN AUTHORIZATION OF HARSCO TRACK TECHNOLOGIES.

SOLID EDGE DRAWING

UNLESS OTHERWISE SPECIFIED ALL DIMENSIONS ARE IN INCHES. TOLERANCES ON DECIMALS ARE ±0.005

CHANGE	REV.	REVISION
ECN-10109	A	RELEASE

DATE
DESIGNER: S/B ASSY, TILT
Drawing Number: ----------
Assembly: 4013791.asm
Weight: 0.0 lbm
Scale: 1:1
Material: MK VI NZ 42
Date: 15-MAY-07
Drawn: JBR
Checked: JBR
Size: E
Sheet: 1 of 1

HTT
Harsco Track Technologies
Harsco
Columbia, SC

4013791

Plotted by ojouzts on 6/25/2007 4013791.dft

ENG. DWG. NO.
W A0219 W

REVISIONS							
NO	DER	DESCRIPTION	ZONE	DR	CK	APP	MF
1		RELEASED		MT			
2	EER 2805	PICT. CHG. IT. 14, ADDED PARTS LIST					
3	11774	DELETED IT6 A0060019		TCW		HAP	

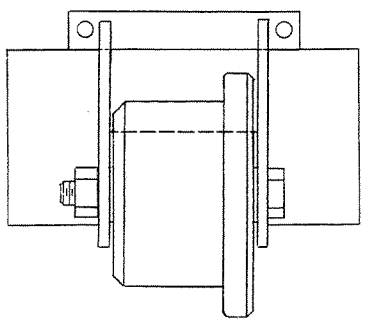

L/H WHEEL ASS'Y
(AB)

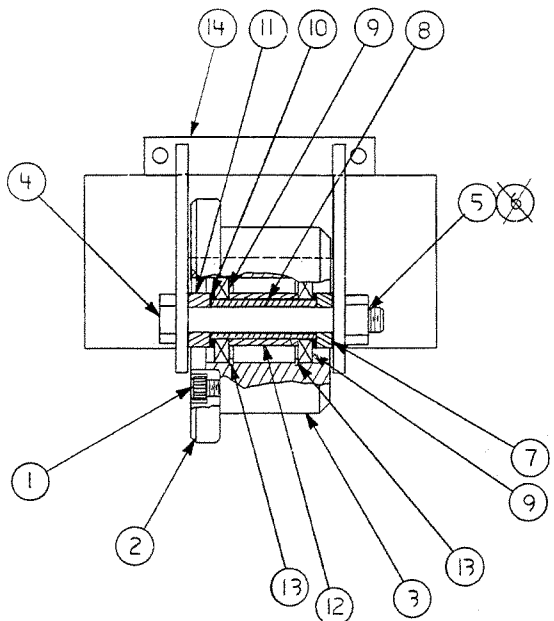

R/H WHEEL ASS'Y
(AA)

IT.	PART NO.	DESCRIPTION	AA	AB
14	A0213WAA	WHEEL BRACKET ASSY.	1	1
13	L40001	RETAINING RING	2	2
12	Z752201	SPACER	1	1
11	Z752200	SPACER	1	1
10	Z762124-001	INSULATING WASHER	2	2
9	L40213	RADIAL BALL BEARING	2	2
8	Z752202-01-001	INSULATING BUSHING	1	1
7	Z752199	SPACER	1	1
~~6~~	~~A0060019~~	~~7/8 SAE FLTWSHR (LIGHT)~~	~~1~~	~~1~~
5	0-301001-0-07	7/8-9 LOCKNUT	1	1
4	A0036331	7/8-9×7" H/H CPSCR	1	1
3	0-1202407-0-01	WHEEL ROLLER	1	1
2	0-1202408-0-01	WHEEL FLANGE	1	1
1	A0041126	1/2-12×1¼ SOC. HD. CPSCR	4	4

PARTS LIST — QTY

THIS DOCUMENT CONTAINS PROPRIETARY INFORMATION AND SUCH INFORMATION MAY NOT BE DISCLOSED TO OTHERS FOR ANY PURPOSE OR USED FOR MANUFACTURING PURPOSES WITHOUT THE WRITTEN PERMISSION OF TAMPER.

3rd ANGLE PROJECTION

DO NOT SCALE

WEIGHT LBS.

APPLIED TOLERANCES
ALL DIMENSIONS ARE IN INCHES — TOLERANCE UNLESS OTHERWISE SPECIFIED

NOMINAL SIZE RANGE		PLUS OR MINUS			NOMINAL SIZE RANGE		PLUS OR MINUS		
OVER	TO	FRACTION	2 PLACE DECIMAL	3 PLACE DECIMAL	OVER	TO	FRACTION	2 PLACE DECIMAL	3 PLACE DECIMAL
—	1	1/64	.01	.005	6	24	3/64	.03	.005
1	6	1/32	.02	.005	24	—	1/16	.05	.010

ANGULAR DIMENSIONS PLUS OR MINUS ½ DEGREE
ALL MACHINED SURFACES TO HAVE A SURFACE FINISH OF 125 MICROINCHES UNLESS OTHERWISE SPECIFIED.

DESCRIPTION (30)
WHEEL ASS'Y

DRAWN	DATE	MACHINE TYPE
TRIPPE	4/21/83	LPM

CHECKED DATE
APP DATE 4/4/86
APP DATE

The Tamper
Div. Cannon Corp.
2401 Edmund Road
West Columbia
South Carolina 29171
Tel. (803) 794-9180
Telex 573423

ENG. DWG. NO.
W A0219 W

SHEET 1 OF 1

ITEM NO	PART NO.	LEG	DESCRIPTION	QTY

american blueprint of columbia
ENGS-11 34856

IMPLIED TOLERANCES SEE TOLERANCES IMPLICITES VOIR STD 1001

DEFINITION OF SYMBOLS SEE DEFINITION DE SYMBOLES VOIR STD 1002

PROJECTION: ~~1st ANGLE~~ | 3rd ANGLE

CANRON RAILGROUP TAMPER

LOCATION W. COLA

DESCRIPTION (30): GIMBEL ASSY

ENG. DWG. NO./DESSIN DEPT. TECH NO: 3 0-2303638-0

SHEET NO. FEUILLE NO. 1 — CONT. ON CONT. SUR. ~

ASSEM. IDENTIFIER: 01 | 02 | 03

ITEM NO.	PART NO.	LEG	DESCRIPTION (30) / MATERIAL (50)	Quantity/Quantité		
1	0-1406304-0-01	M	GIMBEL ROD	1	0	0
2	0-1406304-0-02	M	GIMBEL ROD	0	1	0
3	A0056035	H	JAM NUT, 3/4-16 (HEAVY)	2	2	2
4	0-3652048-0-01	P	ROD END WITH STUD	2	2	2
5	A0601T45		THD. ROD 3/4-16×13 (GR.5)	0	0	1

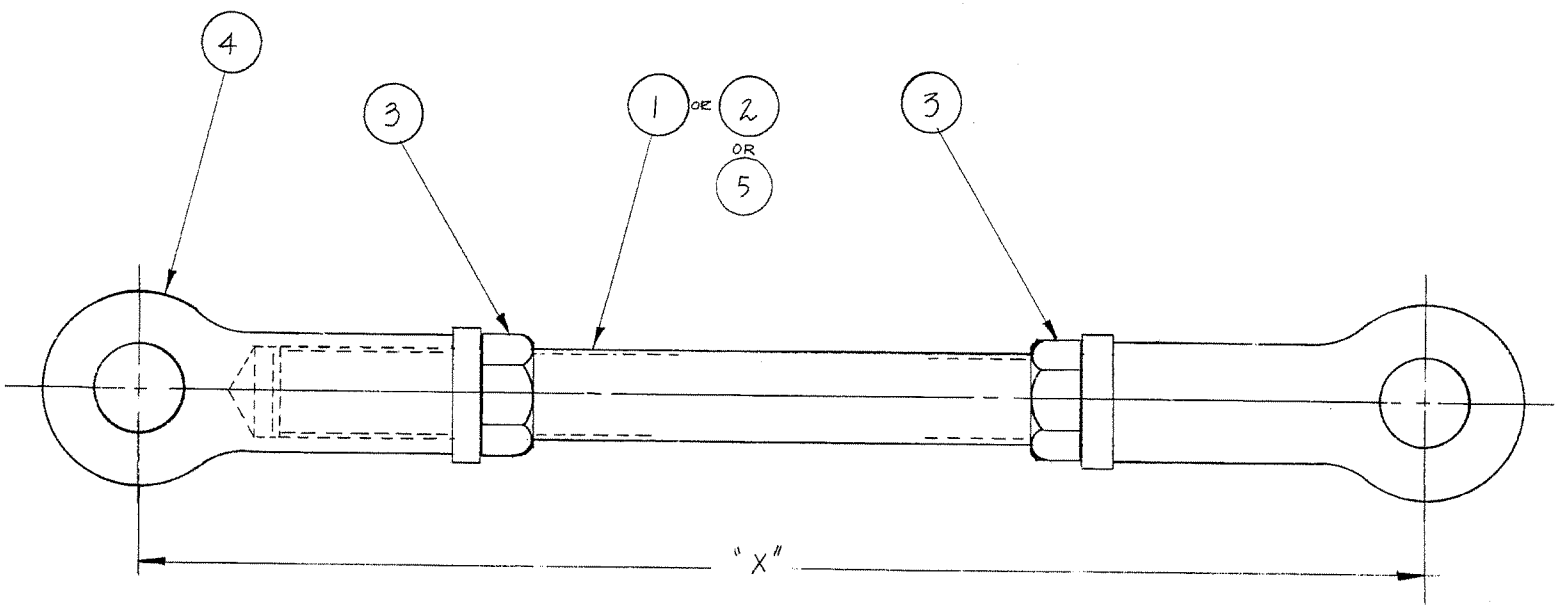

PART NO.	DIM "X"	ER
0-2303638-0-01	11 1/4	
0-2303638-0-02	7 1/2	
0-2303638-0-03	15 11/16	5288.32

SCANNED

REVISION ____ OF THIS DRAWING HAS BEEN SCANNED INTO THE CAD/CAM DATA BASE.

TM — INITIALS

6-9-00 — DATE

NO.	DER/DTJ	Description of Change / Description du Changement	APP.
1	80119	TEMPORARY RELEASE, 02 TAB	NB

REVISION

Drawn by / Dessiné par: NHON BUI, APR.10,80 | Checked by / Verifié par: 4/2-1/80 | APP.

LOCN: 2, 4 | DIST. CODE | DEPT: 1

ASSEM. PART NO.: 0-2303638-0-01 | 0-2303638-0-02 | 0-2303638-0-03

ENG. DWG. NO. / DESSIN DEPT. TECH. NO.: 3 0-2303638-0

CONFIDENTIAL

© COPYRIGHT 2001 HARSCO TRACK TECHNOLOGIES. THIS DRAWING OR DOCUMENT IS THE PROPERTY OF HARSCO TRACK TECHNOLOGIES AND EMBODIES CONFIDENTIAL INFORMATION, TRADE SECRET INFORMATION, AND/OR KNOW-HOW THAT IS THE PROPERTY OF HARSCO TRACK TECHNOLOGIES. BY ACCEPTING THIS DRAWING OR DOCUMENT, THE RECIPIENT AGREES (1) NOT TO PROVIDE, OR OTHERWISE MAKE AVAILABLE, THE DRAWING OR DOCUMENT, OR ANY INFORMATION OR KNOW-HOW EMBODIED THEREIN, TO ANY THIRD PARTY AND (2) NOT TO REPRODUCE OR USE THE DRAWING OR DOCUMENT TO MANUFACTURE ANY APPARATUS OR DEVICE, WITHOUT THE PRIOR WRITTEN AUTHORIZATION OF HARSCO TRACK TECHNOLOGIES.

SOLID EDGE DRAWING

NOTE:

USE IT-2 AS A TEMPLATE TO DRILL MOUNTING HOLES IN SHADOWBOARD.

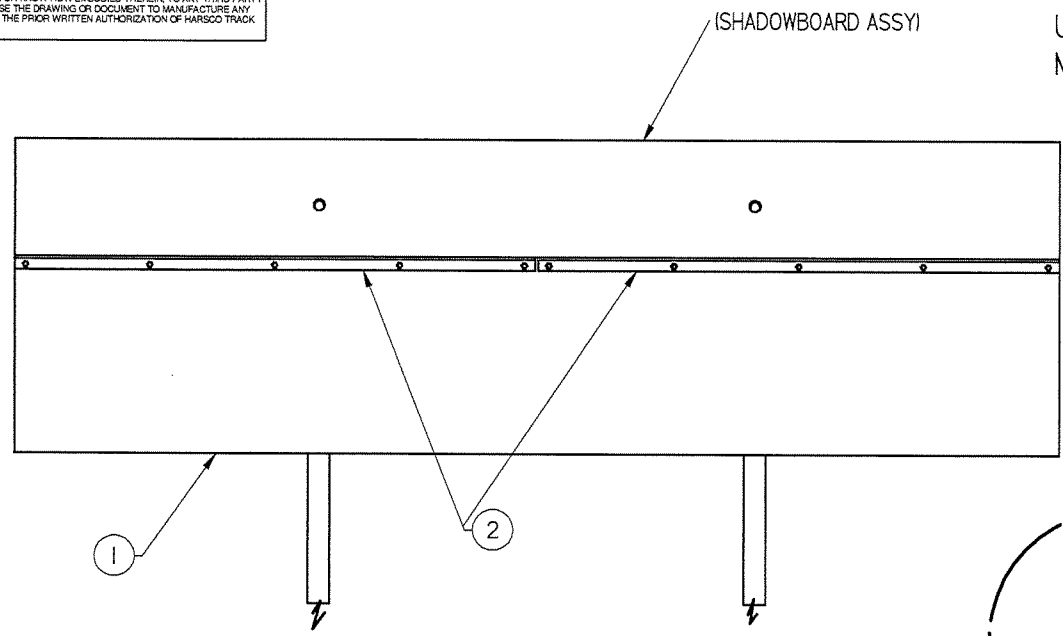

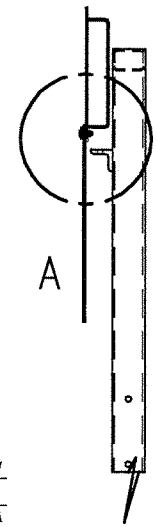

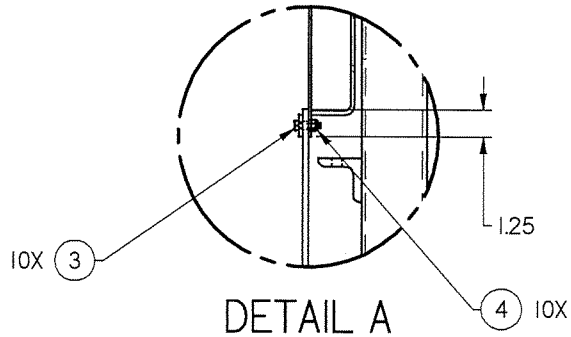

DETAIL A

Item Number	Document Number	Title	Quantity
1	4009961	RUBBER SHIELD	1
2	G2639Y01	CLAMP STRIP	2
3	A0036005	1/4-20 X 1" HHCS	10
4	L41157	LOCKNUT, 1/4-20, LIGHT	10

IMPLIED TOLERANCES

ALL DIMENSIONS ARE IN INCHES - TOLERANCE UNLESS OTHERWISE SPECIFIED

NOMINAL SIZE RANGE		INCH PLUS OR MINUS		NOMINAL SIZE RANGE		METRIC PLUS OR MINUS	
OVER	TO	2 PLACE DECIMAL	3 PLACE DECIMAL	OVER	TO	1 PLACE DECIMAL	2 PLACE DECIMAL
0	6	.03	.005	0	150	.8	.127
6	24	.04	.008	150	600	1.0	.203
24	-	.06	.010	-	600	1.5	.254

UNLESS OTHERWISE SPECIFIED ALL MACHINED SURFACES WILL HAVE A SURFACE FINISH OF 125 MICRONCHES ANGULAR TOLERANCE OF ± .50° CONCENTRICITY WITHIN .010

THIRD ANGLE PROJECTION

UNLESS OTHERWISE SPECIFIED ALL WELDS SHOULD ADHERE TO THE LATEST HTT WELDING SPECIFICATION 101

CHANGE	R/L	REVISION	DATE
13116.58	A	RELEASE	10-11-05

Description: S/B LIGHT SHIELD ASSY

Drawing Number: ----------

Machine Type: MARK VI IRAQ

Model: 4009960.asm

Drawn: PJG

Date Drawn: 10-11-05

Weight: 128.007 lbm

Scale: 1:4

APVD Desg: JOC

APVD Chkng: JOC

Mat'l

HTT
Harsco Track Technologies
Harsco
Columbia, SC

Part Number: 4009960

Size: B

Sheet: 1 of 1

Plotted by pgleaton on 10/13/2005 4009960.dft

ENG.DWG.NO.
D0823WAD

REVISIONS							
NO	ER	DESCRIPTION	ZONE	DR	CK	APP	MF
-	13000	NEW RELEASE		PJG			

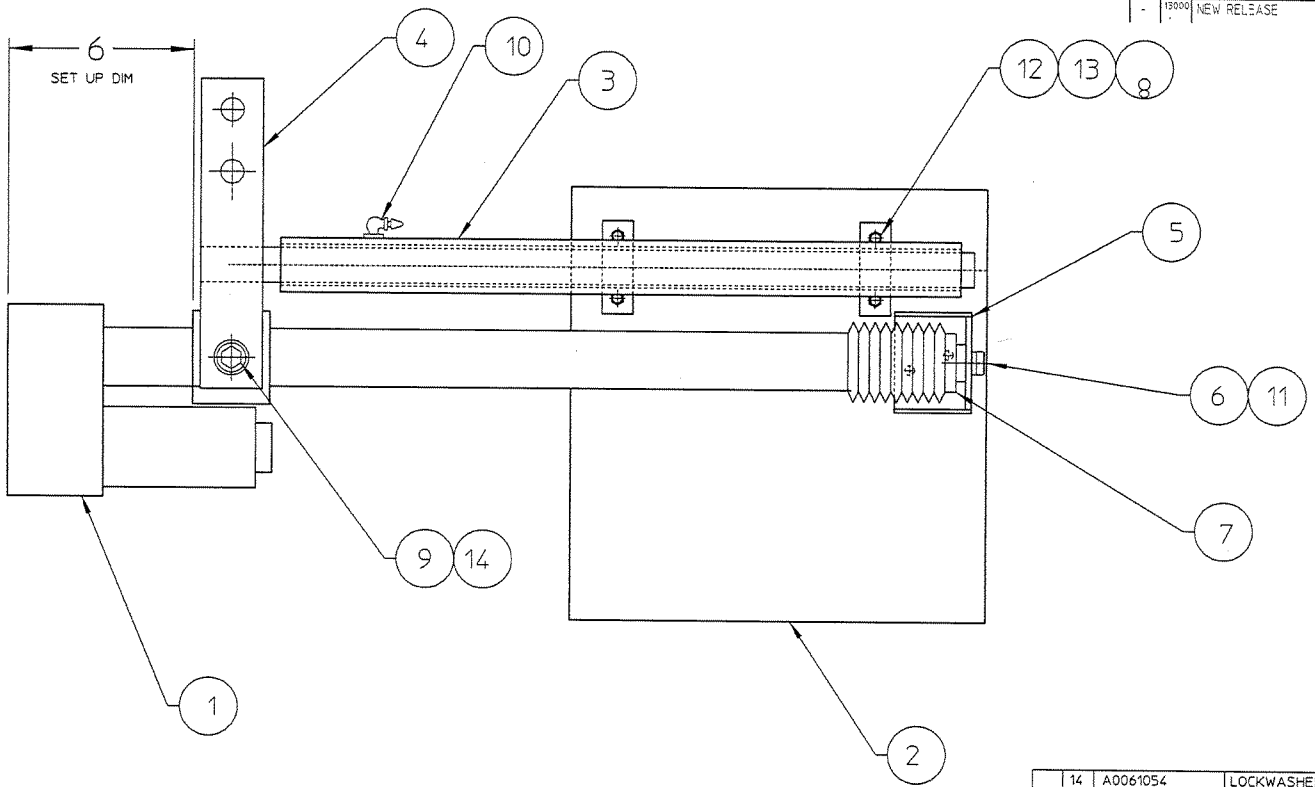

FIG NO.	ITEM NO.	PART NUMBER	DESCRIPTION AND MATERIAL SIZE (REF.ONLY)	QTY
	14	A0061054	LOCKWASHER 3/4	2
	13	A0055034	HEX NUT 1/4-20	6
	12	A0061008	LOCKWASHER 1/4	6
	11	A0061013	LOCKWASHER 1/2	1
	10	L26028	GREASE FITTING	1
	9	A0926Y01	PIVOT PIN	2
	8	A0037001	CAP SCR. 1/4-20X3/4	6
	7	A7347Y01	ACTUATOR BOOT	1
	6	A0041144	CAP SCR. 1/2-20X1"	1
	5	A8752YAA	BRACKET	1
	4	D0819XAA	LINER SUPPORT ARM ASSY	1
	3	D0817XAA	TUBE GUIDE ASSY	1
	2	D0816X01	LINER FLAG	1
	1	C0046XAC	LINEAR ACTUATOR	1

SCALL=2

IMPLIED TOLERANCES
ALL DIMENSIONS ARE IN INCHES-TOLERANCE UNLESS OTHERWISE SPECIFIED

NOMINAL SIZE RANGE		PLUS OR MINUS			NOMINAL SIZE RANGE		PLUS OR MINUS		
OVER	TO	FRACTION	2 PLACE DECIMAL	3 PLACE DECIMAL	OVER	TO	FRACTION	2 PLACE DECIMAL	3 PLACE DECIMAL
-	1	1/64	.01	.003	6	24	3/64	.03	.008
1	6	1/32	.02	.005	24	-	1/16	.05	.010

ANGULAR DIMENSIONS PLUS OR MINUS 1 DEGREE

ALL MACHINED SURFACES TO HAVE A SURFACE FINISH OF 125 MICROINCHES UNLESS OTHERWISE SPECIFIED.

WELDING SPECIFICATION

UNLESS OTHERWISE SPECIFIED ALL WELDS SHOULD ADHERE TO FAIRMONT TAMPER WELDING SPECIFICATION NO. 101

WEIGHT lbs.

3rd ANGLE PROJECTION

DO NOT SCALE

SHEET 1 CONT. — ON —

DESCRIPTION 2X
LINER FLAG ARM ASSY R/H

DRAWN PJG	DATE 09-02-03	MACHINE TYPE MK IV	
CHECKED JBR	DATE 09-03-03	Fairmont Tamper	2401 Edmund Road-Box 20 Cayce-West Columbia, South Carolina 29171-0020 (803) 822-9160
APP-ENG JBR	DATE 09-03-03		
APP-MFG	DATE		
LAST EDIT. 13000 .38	CHECKED PWL DATE 24-Sep-03	ENG.DWG.NO. D0823WAD	

THIS DOCUMENT CONTAINS PROPRIETARY INFORMATION AND SUCH INFORMATION MAY NOT BE DISCLOSED TO OTHERS FOR ANY PURPOSE OR USED FOR MANUFACTURING PURPOSES WITHOUT THE WRITTEN PERMISSION OF FAIRMONT TAMPER.

ENG.DWG.NO.
D0823WAC

REVISIONS							
NO	ER	DESCRIPTION	ZONE	DR	CK	APP	MF
-	13000	NEW RELEASE		PJG			

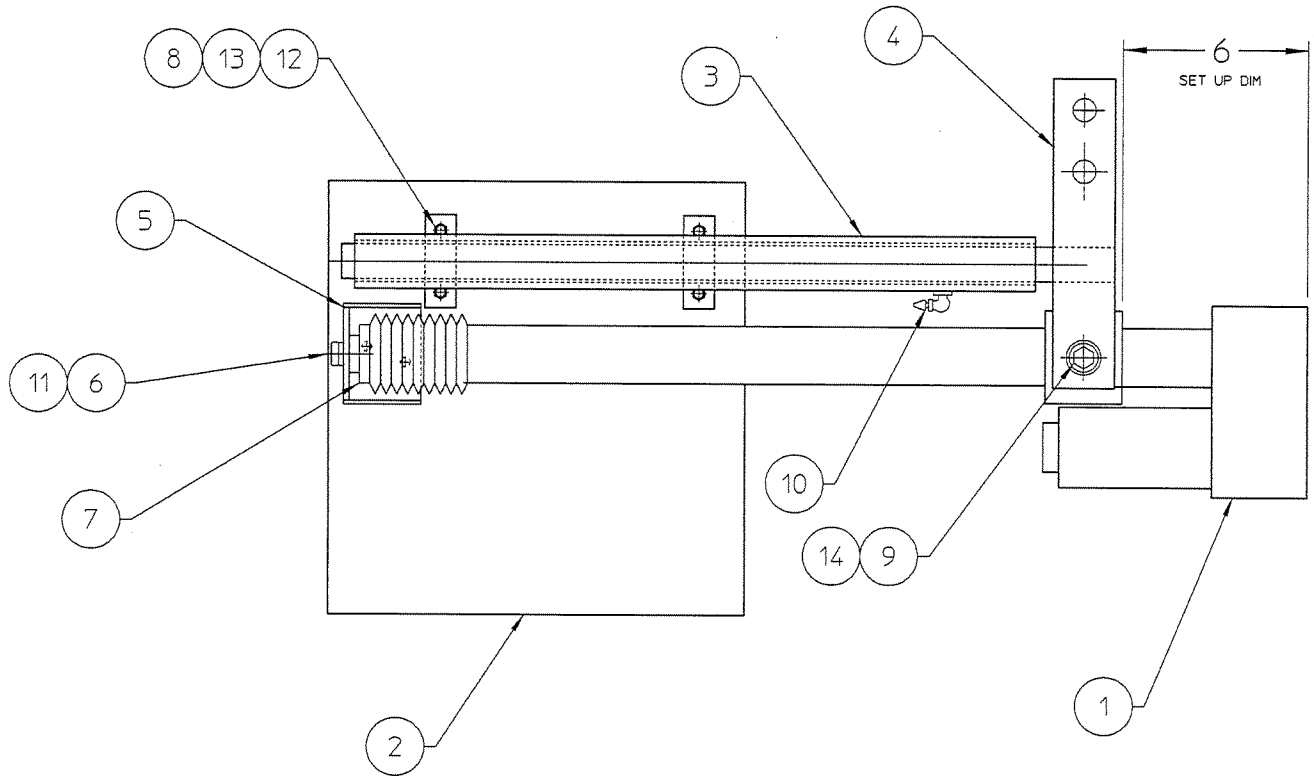

FIG NO.	ITEM NO.	PART NUMBER	DESCRIPTION AND MATERIAL SIZE (REF.ONLY)	QTY
	14	A0061054	LOCKWASHER 3/4	2
	13	A0055034	HEX NUT 1/4-20	6
	12	A0061008	LOCKWASHER 1/4	6
	11	A0061013	LOCKWASHER 1/2	1
	10	L26028	GREASE FITTING	1
	9	A0926Y01	PIVOT PIN	2
	8	A0037001	CAP SCR. 1/4-20X3/4	6
	7	A7347Y01	ACTUATOR BOOT	1
	6	A0041144	CAP SCR. 1/2-20X1"	1
	5	A8752YAA	BRACKET	1
	4	D0819XAA	LINER SUPPORT ARM ASSY	1
	3	D0817XAA	TUBE GUIDE ASSY	1
	2	D0816X02	LINER FLAG	1
	1	C0046XAC	LINEAR ACTUATOR	1

SCALL=2

IMPLIED TOLERANCES
ALL DIMENSIONS ARE IN INCHES-TOLERANCE UNLESS OTHERWISE SPECIFIED

NOMINAL SIZE RANGE		PLUS OR MINUS			NOMINAL SIZE RANGE		PLUS OR MINUS		
OVER	TO	FRACTION	2 PLACE DECIMAL	3 PLACE DECIMAL	OVER	TO	FRACTION	2 PLACE DECIMAL	3 PLACE DECIMAL
-	1	1/64	.01	.003	6	24	3/64	.03	.006
1	6	1/32	.02	.005	24	-	1/16	.05	.010

ANGULAR DIMENSIONS PLUS OR MINUS 1 DEGREE

√ ALL MACHINED SURFACES TO HAVE A SURFACE FINISH OF 125 MICROINCHES UNLESS OTHERWISE SPECIFIED.

WELDING SPECIFICATION

UNLESS OTHERWISE SPECIFIED ALL WELDS SHOULD ADHERE TO FAIRMONT TAMPER WELDING SPECIFICATION NO. 101

WEIGHT

DIM.

3rd ANGLE PROJECTION

DO NOT SCALE

SHEET 1 CONT. - OF -

DESCRIPTION (2)
LINER FLAG ARM ASSY L/H

DRAWN PJG	DATE 09-02-03	MACHINE TYPE MK IV	
CHECKED JBR	DATE 09-03-03		
APPROVED JBR	DATE 09-03-03		
CONFIDNFO	DATE		
LAST EDK. 13000 .38	CHECKED DWG JBR DATE 2-Sep-03	ENGDWG.NO. D0823WAC	

Fairmont Tamper
2421 Edmund Road-Box 20
Cayce-West Columbia
South Carolina 29171-0020
(803) 822-9460

THIS DOCUMENT CONTAINS PROPRIETARY INFORMATION AND SUCH INFORMATION MAY NOT BE DISCLOSED TO OTHERS FOR ANY PURPOSE OR USED FOR MANUFACTURING PURPOSES WITHOUT THE WRITTEN PERMISSION OF FAIRMONT TAMPER.

ENG.DWG.NO.
C0046XAC

REVISIONS							
NO	ER	DESCRIPTION	ZONE	DR	CK	APP	MF
1	12509 .21	NEW RELEASE		PJG			
B	13049 .16	NOTE 1 WAS "..... TO 1/2 NPT".		EP	WG	WG	
C	100504	DELETED NOTE 1.		PJG	JOC	JOC	

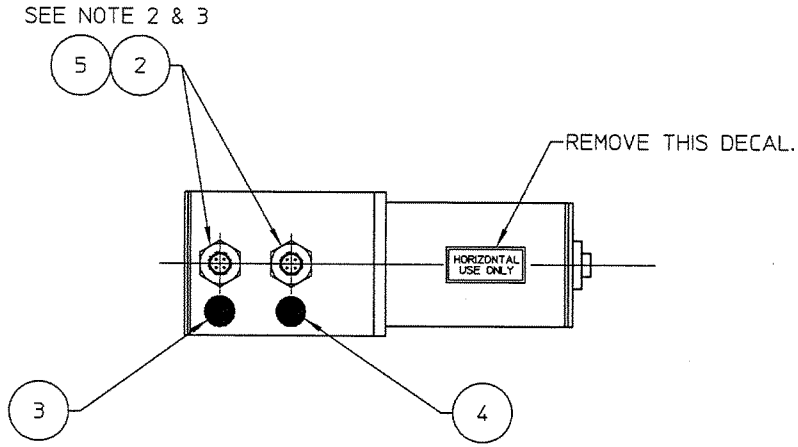

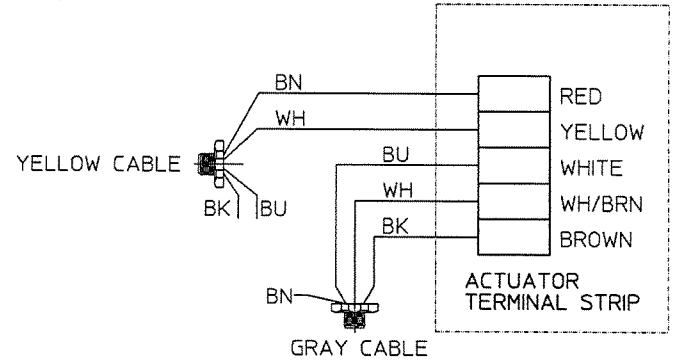

ACTUATOR WIRING

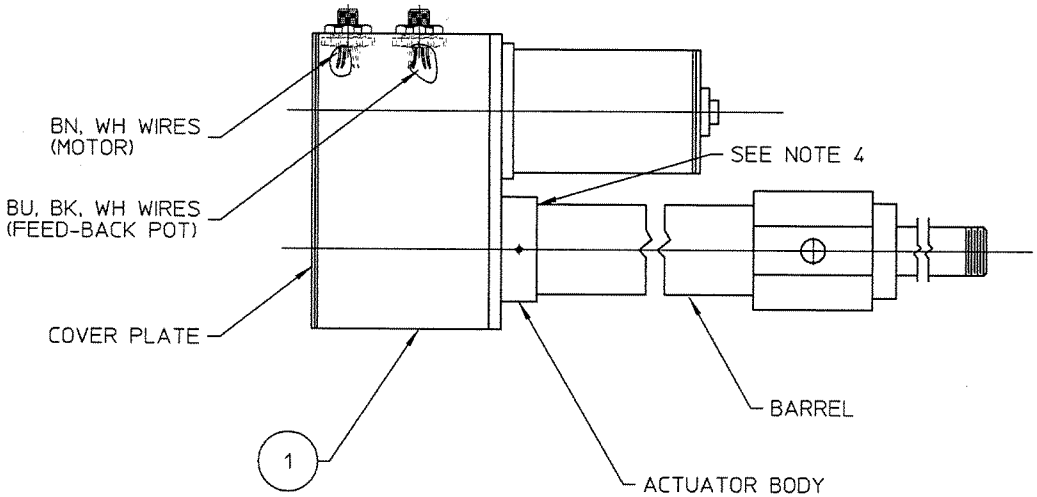

NOTES:

~~1. ENLARGE EXISTING 3/8 NPT TO 1/2 NPSM.~~

2. CUT OFF EXCESS LENGTH OF WIRE THEN STRIP ENDS 1/4". SOLDER WIRES TO TERMINAL LUGS. TAPE UP UNUSED WIRES.

3. USE BLUE LOCTITE TO SEAL THREADS.

4. APPLY RED LOCTITE, 0-3040000-0-07, TO BARREL AND TIGHTEN INTO ACTUATOR BODY UNTIL A NO LOAD AMP READING OF 2.00 ± .1 AMPS IS ACHIEVED.

FIG NO.	ITEM NO.	PART NUMBER	DESCRIPTION AND MATERIAL SIZE (REF.ONLY)	QTY
	5	0-3250001-0-01	TERMINAL LUG	5
	4	H5961Y02	DECAL DOT LIGHT GRAY	1
	3	H5961Y01	DECAL DOT MEDIUM YELLOW	1
	2	185639	RECEPTACLE 4 PIN	2
	1	B8409X02	ELECTRIC LINEAR ACTUATOR	1

SCALE=1

IMPLIED TOLERANCES
ALL DIMENSIONS ARE IN INCHES-TOLERANCE UNLESS OTHERWISE SPECIFIED

NOMINAL SIZE RANGE		PLUS OR MINUS			NOMINAL SIZE RANGE		PLUS OR MINUS		
OVER	TO	FRACTION	2 PLACE DECIMAL	3 PLACE DECIMAL	OVER	TO	FRACTION	2 PLACE DECIMAL	3 PLACE DECIMAL
-	1	1/64	.01	.003	6	24	3/64	.03	.008
1	6	1/32	.02	.005	24	-	1/16	.05	.010

ANGULAR DIMENSIONS PLUS OR MINUS 1 DEGREE
ALL MACHINED SURFACES TO HAVE A SURFACE FINISH OF 125 MICROINCHES UNLESS OTHERWISE SPECIFIED.

WELDING SPECIFICATION
UNLESS OTHERWISE SPECIFIED ALL WELDS SHOULD ADHERE TO FAIRMONT TAMPER WELDING SPECIFICATION NO. 101

WEIGHT lbs.

3rd ANGLE PROJECTION

DO NOT SCALE

SHEET 1 CONT. ON –

DESCRIPTION Q4
LINEAR ACTUATOR ASSY

DRAWN PJG	DATE 05-29-02	MACHINE TYPE MARK IV W/JUPITER
CHECKED HW	DATE 06-04-02	
APP-ENG JOC	DATE 06-04-02	
APP-MFG	DATE	
LAST ECR. 13049 .16	CHECKED dvgn	ENG.DWG.NO. C0046XAC
	DATE 11-Mar-04	

Fairmont Tamper™ 2401 Edmund Road-Box 20 Cayce-West Columbia, South Carolina 29171-0020 (803) 822-9160

THIS DOCUMENT CONTAINS PROPRIETARY INFORMATION AND SUCH INFORMATION MAY NOT BE DISCLOSED TO OTHERS FOR ANY PURPOSE OR USED FOR MANUFACTURING PURPOSES WITHOUT THE WRITTEN PERMISSION OF FAIRMONT TAMPER.

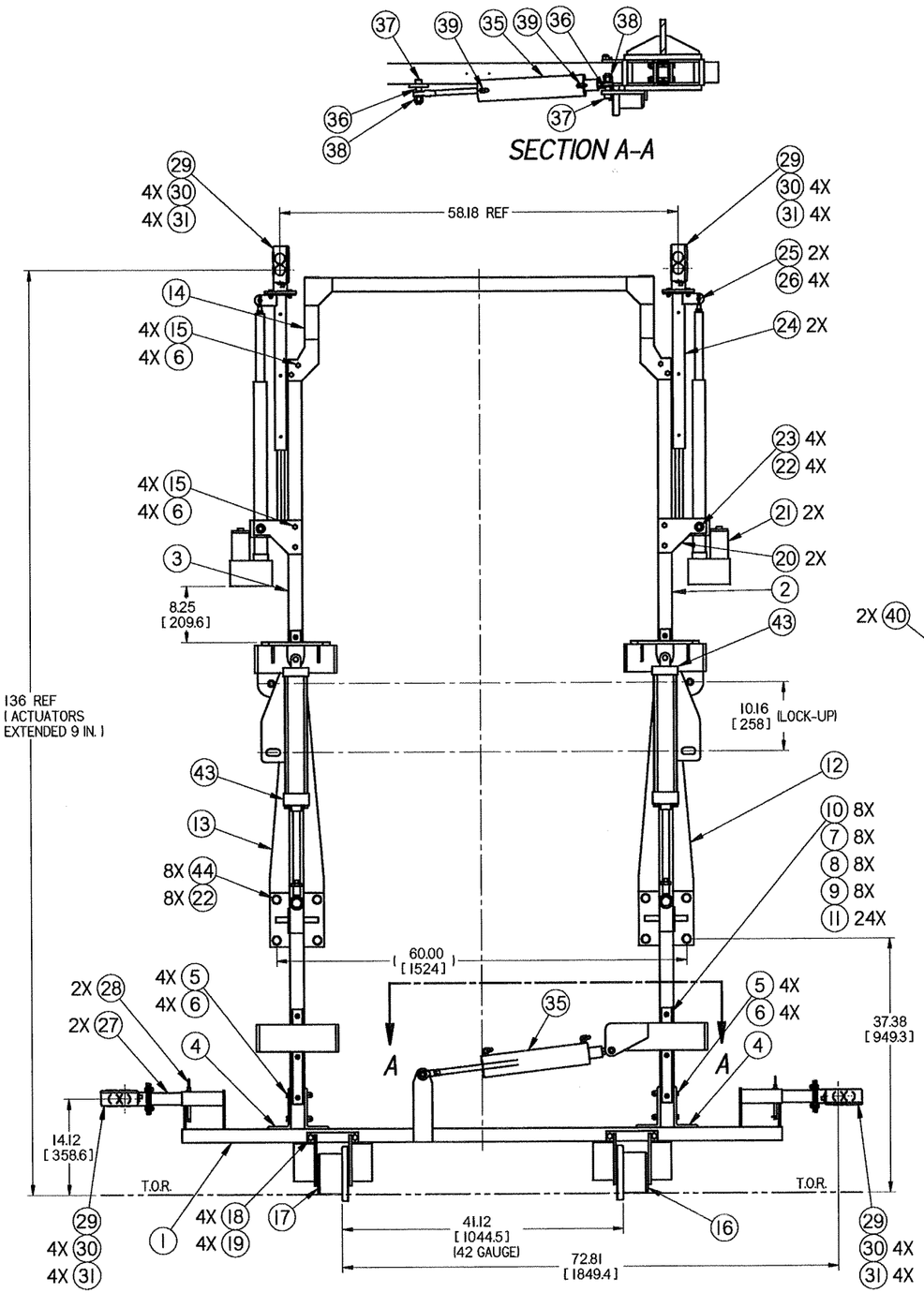

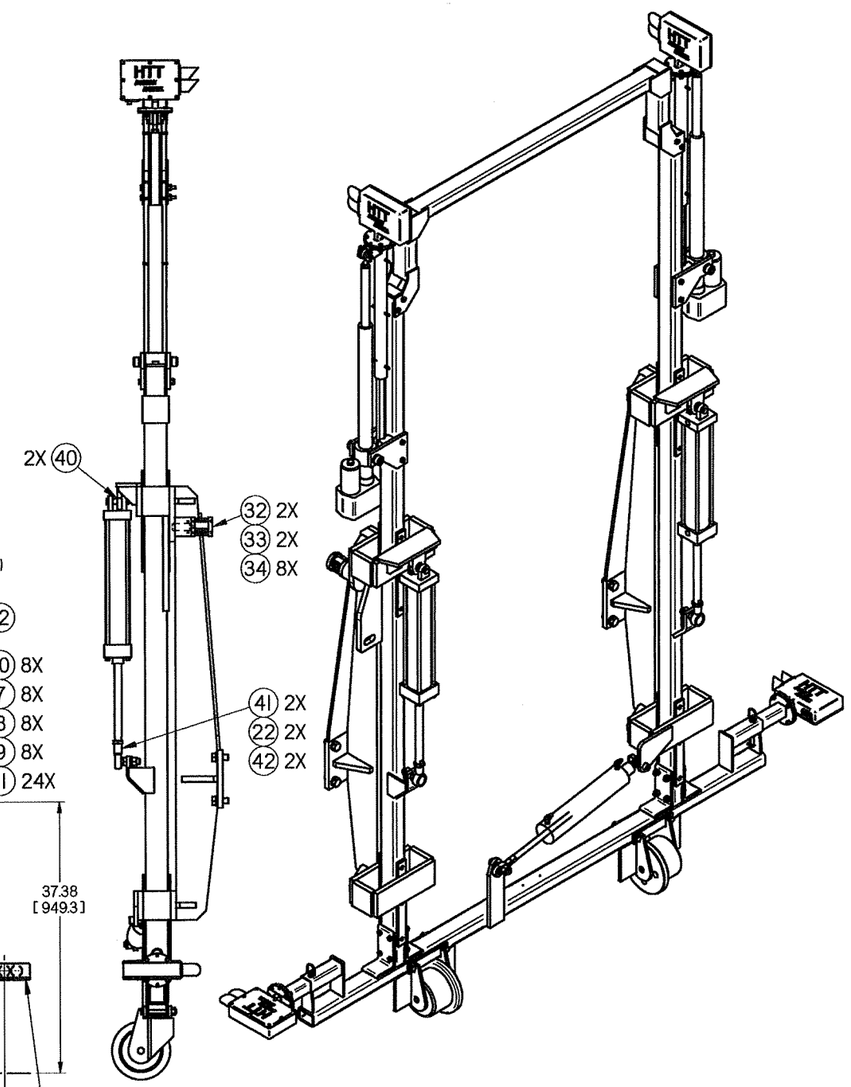

SHOWN IN WORK MODE

Item No.	Document No.	Title	Qty
41	0-3652048-0-01	ROD END WITH STUD	2
42	A0055023	3/4-16 HEX NUT	2
43	C0839Y11	AIR CYL 3 1/4 BORE	2
44	A0036217	3/4-10 X 1 3/4 HHCS	8

Item No.	Document No.	Title	Qty
1	4013053	RECEIVER CARRIER WLDT	1
2	4013079	VERT TUBE WLDT (R/H)	1
3	4013080	VERT TUBE WLDT (L/H)	1
4	C0618Y01	MTG BRACE	2
5	A0037015	3/8-16 X 3 1/2 HHCS	8
6	L40387	LOCKNUT, 3/8-16, HEAVY	16
7	D1009Y01	SLIDE PAD SHIM	8
8	D1009Y02	SLIDE PAD SHIM	8
9	D1009Y03	SLIDE PAD SHIM	8
10	C0679Y01	SLIDE PAD	8
11	A0042009	1/4-20 X 1 FL SHCS GR8	24
12	4004623	RT STABILIZER	1
13	4004624	LT STABILIZER	1
14	4013373	CROSS BEAM WLDT	1
15	A0036075	3/8-16 X 4 1/2 HHCS	8
16	A0219WAA	WHEEL ASSY	1
17	A0219WAB	WHEEL ASSY L/H	1
18	A0036134	1/2-13 X 4 1/2 HHCS	4
19	L40767	1/2-13 UNC-2B ESNA NUT	4
20	C6475XAA	INNER GUIDE TUBE	2
21	D4713XAB	LINEAR ACTUATOR ASSY	2
22	A0061022	3/4 MEDIUM LOCKWASHER	14
23	A0926Y01	PIVOT PIN	4
24	C8834WAA	RECEIVER SUPPORT STAND	2
25	A0973T04	PIN W/HOLES	2
26	A0068022	3/16 X 1 COTTER PIN	4
27	4013062	RECEIVER ARM TUBE WLDT	2
28	0-3015004-0-08	HITCH PIN, 3/8 DIA	2
29	4007012	DOUBLE BARREL RECEIVER	4
30	A0037002	1/4-20 X 1 CAD PL HHCS	16
31	L41157	LOCKNUT, 1/4-20, LIGHT	16
32	A3651Y06	AIR CYL, DBL ACTING	2
33	C0584Y02	PIN	2
34	A0041195	10-24 X 3 1/4 SOC HD CP SCR	8
35	0-2303635-0-06	AIR CYL ASSEMBLY	1
36	0-1406426-0-02	SPACER	2
37	A0041158	5/8-11 X 3 HEX HD CPSCR	2
38	L40006	ESNA NUT 5/8-11	2
39	L420002	1/4MP-JIC FITTING 90	2
40	L41811	SPHERICAL BEARING	2

CONFIDENTIAL
© COPYRIGHT 2001 HARSCO TRACK TECHNOLOGIES. THIS DRAWING OR DOCUMENT IS THE PROPERTY OF HARSCO TRACK TECHNOLOGIES AND EMBODIES CONFIDENTIAL INFORMATION, TRADE SECRET INFORMATION, AND/OR KNOW-HOW THAT IS THE PROPERTY OF HARSCO TRACK TECHNOLOGIES. BY ACCEPTING THIS DRAWING OR DOCUMENT, THE RECIPIENT AGREES (1) NOT TO PROVIDE, OR OTHERWISE MAKE AVAILABLE, THE DRAWING OR DOCUMENT, OR ANY INFORMATION OR KNOW-HOW EMBODIED THEREIN, TO ANY THIRD PARTY AND (2) NOT TO REPRODUCE OR USE THE DRAWING OR DOCUMENT TO MANUFACTURE ANY APPARATUS OR DEVICE, WITHOUT THE PRIOR WRITTEN AUTHORIZATION OF HARSCO TRACK TECHNOLOGIES.

SOLID EDGE DRAWING

IMPLIED TOLERANCES
ALL DIMENSIONS ARE IN INCHES - TOLERANCE UNLESS OTHERWISE SPECIFIED

INCH				METRIC			
NOMINAL SIZE RANGE		PLUS OR MINUS		NOMINAL SIZE RANGE		PLUS OR MINUS	
OVER	TO	2 PLACE DECIMAL	3 PLACE DECIMAL	OVER	TO	1 PLACE DECIMAL	2 PLACE DECIMAL
0	6	.03	.030	0	150	.8	.13
6	24	.04	.020	150	600	1.0	.25
24		.06	.010		600	1.5	.25

UNLESS OTHERWISE SPECIFIED ALL MACHINED SURFACE WILL HAVE
A SURFACE FINISH OF 125 MICROINCHES
ANGULAR TOLERANCE OF ± 0.5°
CONCENTRICITY WITHIN .010

THIRD ANGLE PROJECTION

UNLESS OTHERWISE SPECIFIED ALL WELDS SHOULD ADHERE TO THE LATEST HTT WELD INS SPECIFICATION 161

CHANGE	R/L	REVISION	DATE
100953	A	NEW RELEASE	02-20-07
101005	B	ITEM 14 WAS 4011316	20 Mar 07

Description: RECEIVER BUGGY INSTL
Drawing Number: ----------
Machine Type: MARK VI
Model: 4013052.asm
Weight: 1031.3 lbm
Scale: 1:10
Drawn: C.J.Wolf
Date Drawn: 02-20-07
APVD Dwg: JBR
APVD Chkg: JBR
Mat'l:

HTT
Harsco Track Technologies
Harsco
Columbia, SC

Part Number: 4013052
Size: D
Sheet: 1 of 1

Plotted by mtollefson on 3/20/2007 4013052.dft

NOTES:

1. APPLY ONE DROP OF BLUE LOCTITE TO ALL THREADS

2. WIRE M12 CONNECTOR, IT-6, TO 5 POSITION PLUG, IT-9, SEE CONNECTOR WIRING DETAIL

3. FOR REFERENCE, M12 CONNECTOR, IT-6, PINOUT:
PIN 1 BROWN PIN 2 WHITE PIN 3 BLUE
PIN 4 BLACK PIN 5 GRAY

4. TEST AFTER ASSEMBLY

6. CLOSED CELL FOAM FILLERS ARE NOT FASTENDED IN PLACE. ITEM 16 IS PLACED UNDER PCB ASSY AND ITEM 17 IS PLACED ON TOP OF PCB ASSY

8. PLACE O-RING, ITEM 20, IN GROOVE OF LENS HOOD, ITEM 4. APPLY DIELECTRIC GREASE, H5527Y06 TO O-RING AND PRESS ON LENS SHADES ITEM 21. LENS SHADES SHOULD BE ABLE TO ROTATE BUT NOT FREELY.

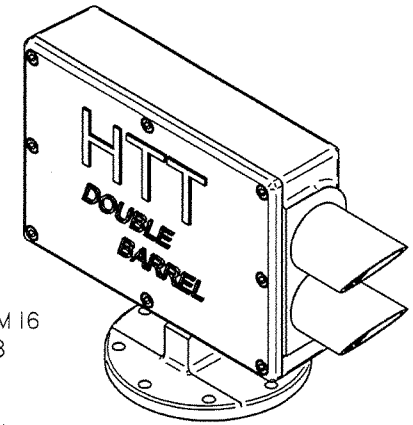

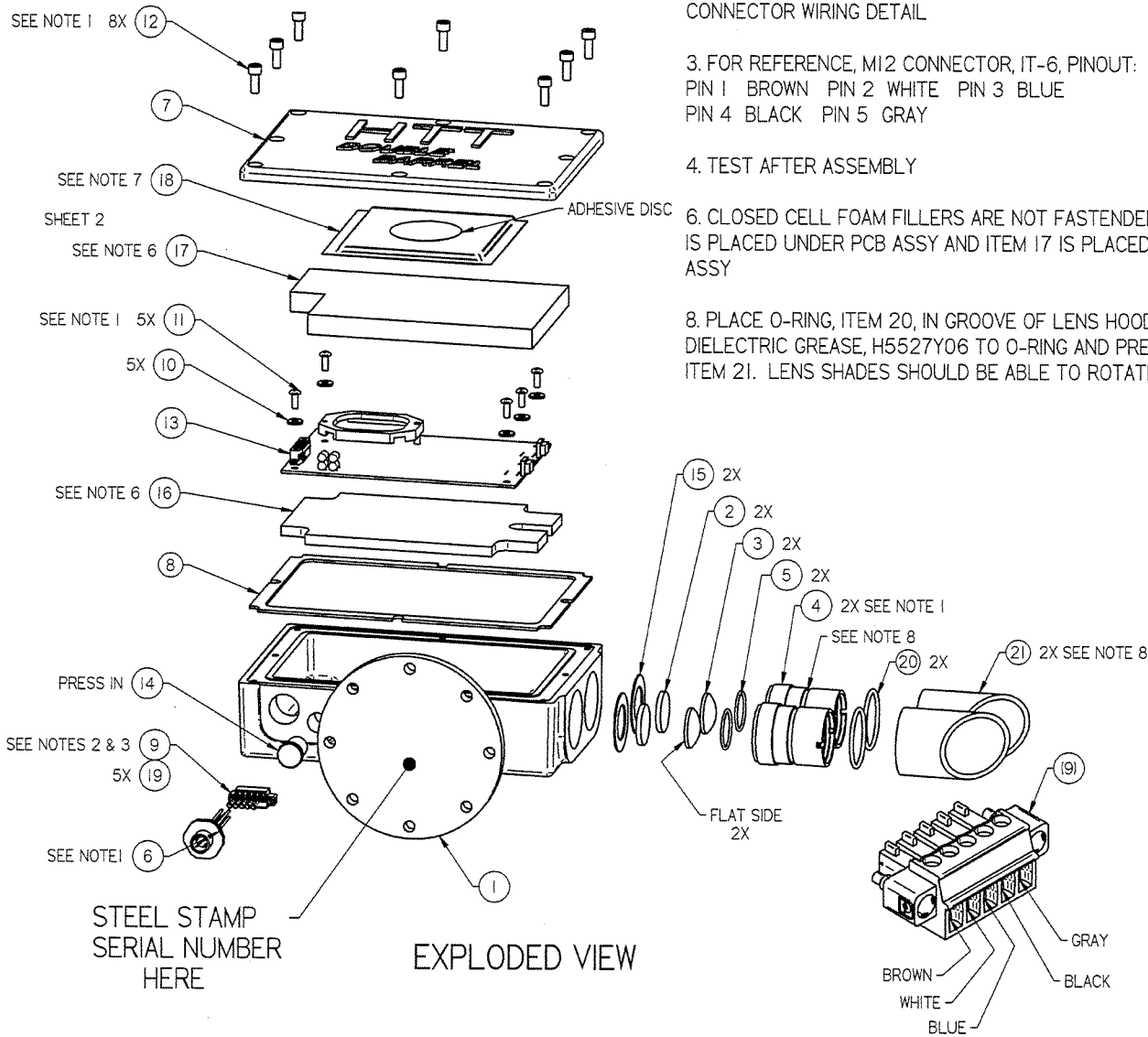

STEEL STAMP SERIAL NUMBER HERE

EXPLODED VIEW

CONNECTOR WIRING DETAIL

ITEM NO.	PART NUMBER	DESCRIPTION	QTY
1	4007013	RECEIVER HOUSING MACHINING	1
2	4007019	OPTICAL FILTER	2
3	4007018	OPTICAL LENS	2
4	4007017	LENS HOOD	2
5	L410486	O-RING	2
6	4007021	CONNECTOR, M12 M 5 PIN, LEADS	1
7	4007015	RECEIVER COVER MACHINING	1
8	4010763	GASKET, FLAT COVER	1
9	A2289Y36	5 POSITION PLUG	1
10	A0059053	6 PLAIN FLAT WASHER STAINLESS	5
11	A0051043	6-32 X 3/8 PHMS STAINLESS PHILLIPS	5
12	A0041243	10-24 X 1/2 SHCS STAINLESS	8
13	H6752XAD	PCB ASSY, RECEIVER	1
14	4007356	LED WINDOW	1
15	4008403	LENS CUSHION	2
16	4008946	FILLER, FOAM 1/4"	1
17	4008947	FILLER, FOAM 1/2"	1
18	4008955	DESICCANT PACKET	1
19	0-3250001-0-43	TERMINAL LUG	5
20	F015368	O-RING, -125	2
21	4010067	LENS SHADE	2

SOLID EDGE DRAWING

CONFIDENTIAL
© COPYRIGHT 2001 HARSCO TRACK TECHNOLOGIES. THIS DRAWING OR DOCUMENT IS THE PROPERTY OF HARSCO TRACK TECHNOLOGIES AND EMBODIES CONFIDENTIAL INFORMATION, TRADE SECRET INFORMATION, AND/OR KNOW-HOW THAT IS THE PROPERTY OF HARSCO TRACK TECHNOLOGIES. BY ACCEPTING THIS DRAWING OR DOCUMENT, THE RECIPIENT AGREES (1) NOT TO PROVIDE, OR OTHERWISE MAKE AVAILABLE, THE DRAWING OR DOCUMENT, OR ANY INFORMATION OR KNOW-HOW EMBODIED THEREIN, TO ANY THIRD PARTY AND (2) NOT TO REPRODUCE OR USE THE DRAWING OR DOCUMENT TO MANUFACTURE ANY APPARATUS OR DEVICE, WITHOUT THE PRIOR WRITTEN AUTHORIZATION OF HARSCO TRACK TECHNOLOGIES.

IMPLIED TOLERANCES
ALL DIMENSIONS ARE IN INCHES • TOLERANCE UNLESS OTHERWISE SPECIFIED

NOMINAL SIZE RANGE		INCH PLUS OR MINUS		NOMINAL SIZE RANGE		METRIC PLUS OR MINUS	
OVER	TO	3 PLACE DECIMAL	3 PLACE DECIMAL	OVER	TO	1 PLACE DECIMAL	2 PLACE DECIMAL
0	6	.03	.005	0	150	.8	.127
6	24	.04	.008	150	600	1.0	.203
24	-	.06	.010	-	600	1.5	.254

UNLESS OTHERWISE SPECIFIED ALL MACHINED SURFACES WILL HAVE A SURFACE FINISH OF 125 MICRONCHES ANGULAR TOLERANCE OF ± 50" CONCENTRICITY WITHIN .010

THIRD ANGLE PROJECTION

UNLESS OTHERWISE SPECIFIED ALL WELDS SHOULD ADHERE TO THE LATEST HTT WELDING SPECIFICATION 101

CHANGE	R/L	REVISION		DATE
13081.1	A	RELEASE		9/7/04
13081.8	B	IT-10 & 11 QTY WAS 7. ADDED ITS-15 THRU 19, NOTES 5, 6, 7, & SHEET 2		4/11/05
13081.17	C	ITEM 13 WAS H6752XAA	JBR/MM	8/17/05
13081.25	D	ADDED ITS-20 & 21 & NOTE 8	JBR/AML	9/22/05
100092	E	IT-8 WAS 4007020. IT-20 WAS L41740. DEL NOTE 5.	JBR/AML	12/1/05

Description: DOUBLE BARREL RECEIVER
Drawing Number: ----------
Machine Type: ALL TAMPERS
Model: 4007012.asm
Drawn: JBR
Date Drawn: 9/7/04
Weight: 7.190 lbm
Scale: 1:2
APVD Dsig: K.Koon
APVD DtEng: AML
Mat'l:

HTT
Harsco Track Technologies
Harsco
Columbia, SC

Part Number: 4007012
Size: C
Sheet: 1 of 2

Plotted by jrowell on 12/1/2005 4007012.dft

NOTES:
7. INNER SURFACE OF COVER MUST BE CLEAN AND DRY. ATTACH DESICCANT PACKET TO CENTER OF COVER USING THE ADHESIVE DISC THAT COMES ON THE PACKET. SEE PICTURE BELOW.

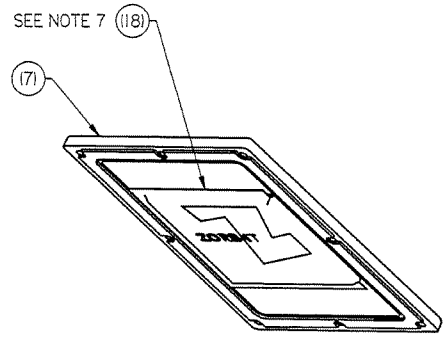

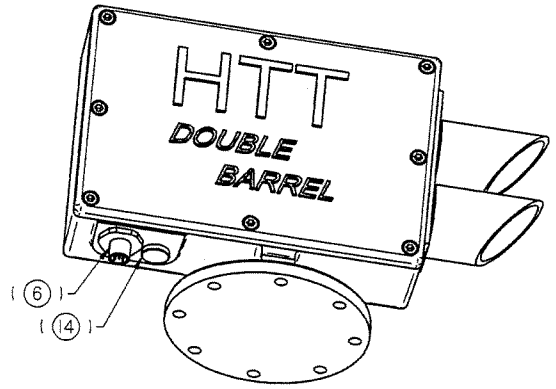

RED INDICATOR ILLUMINATES WHEN RECEIVER SEES PROJECTOR LIGHT. GREEN INDICATES POWER ON

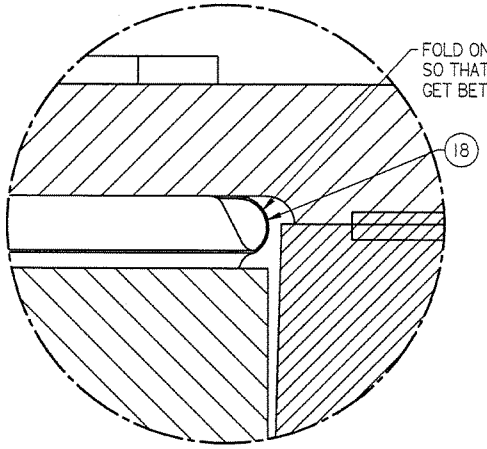

DETAIL B

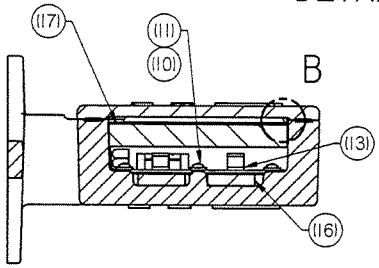

SECTION A-A

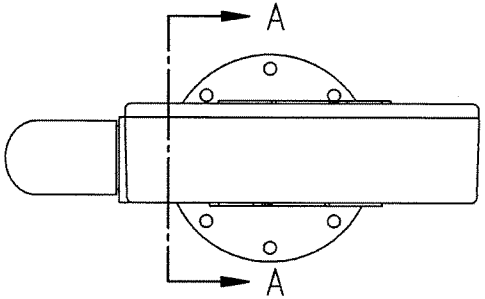

TOP VIEW

ROUTE WIRE FROM M12 CONNECTOR OVER THE TOP OF THE 1/2" CLOSED CELL FOAM FILLER

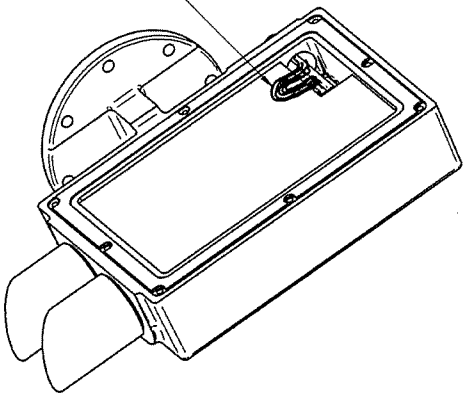

SHOWN WITH COVER REMOVED

SOLID EDGE DRAWING

CONFIDENTIAL
© COPYRIGHT 2001 HARSCO TRACK TECHNOLOGIES. THIS DRAWING OR DOCUMENT IS THE PROPERTY OF HARSCO TRACK TECHNOLOGIES AND EMBODIES CONFIDENTIAL INFORMATION, TRADE SECRET INFORMATION, AND/OR KNOW-HOW THAT IS THE PROPERTY OF HARSCO TRACK TECHNOLOGIES. BY ACCEPTING THIS DRAWING OR DOCUMENT, THE RECIPIENT AGREES (1) NOT TO PROVIDE, OR OTHERWISE MAKE AVAILABLE, THE DRAWING OR DOCUMENT, OR ANY INFORMATION OR KNOW-HOW EMBODIED THEREIN, TO ANY THIRD PARTY AND (2) NOT TO REPRODUCE OR USE THE DRAWING OR DOCUMENT TO MANUFACTURE ANY APPARATUS OR DEVICE, WITHOUT THE PRIOR WRITTEN AUTHORIZATION OF HARSCO TRACK TECHNOLOGIES.

IMPLIED TOLERANCES
ALL DIMENSIONS ARE IN INCHES - TOLERANCE UNLESS OTHERWISE SPECIFIED

NOMINAL SIZE RANGE OVER	TO	INCH 2 PLACE DECIMAL	INCH 3 PLACE DECIMAL	NOMINAL SIZE RANGE OVER	TO	METRIC 1 PLACE DECIMAL	METRIC 2 PLACE DECIMAL
0	6	.03	.005	0	150	.8	.127
6	24	.04	.006	150	600	1.0	.203
24	-	.06	.010	-	600	1.5	.254

UNLESS OTHERWISE SPECIFIED ALL MACHINED SURFACES WILL HAVE:
A SURFACE FINISH OF 125 MICROINCHES
ANGULAR TOLERANCE OF ± 50'
CONCENTRICITY WITHIN .010

THIRD ANGLE PROJECTION

UNLESS OTHERWISE SPECIFIED ALL WELDS SHOULD ADHERE TO THE LATEST HTT WELDING SPECIFICATION 101

CHANGE	R/L	REVISION		DATE
13081.1	A	RELEASE		9/7/04
13081.8	B	IT-10 & 11 QTY WAS 7. ADDED ITS-15 THRU 19, NOTES 5, 6, 7, & SHEET 2		4/11/05
13081.17	C	ITEM 13 WAS H6752XAA	JBR/MM	8/17/05
13081.25	D	ADDED ITS-20 & 21 & NOTE 8	JBR/AML	9/22/05
100092	E	IT-8 WAS 4007020. IT-20 WAS L41740. DEL NOTE 5.	JBR/AML	12/1/05

Description: DOUBLE BARREL RECEIVER
Drawing Number: ----------
Machine Type: ALL TAMPERS
Model: 4007012.asm
Drawn: JBR
Date Drawn: 9/7/04
Weight: 7.190 lbm
Scale: 1:2
APVD Engg: K.Koon
APVD Qlty: AML
Matl:

HTT
Harsco Track Technologies
Harsco
Columbia, SC

Part Number: 4007012
Size: C
Sheet: 2 of 2

Plotted by jrowell on 12/1/2005 4007012.dft

ENG.DWG.NO.
D4713XAB

REVISIONS							
NO	ER	DESCRIPTION	ZONE	DR	CK	APP	MF
1	12509	RELEASED					
				XXX	XX	XXX	

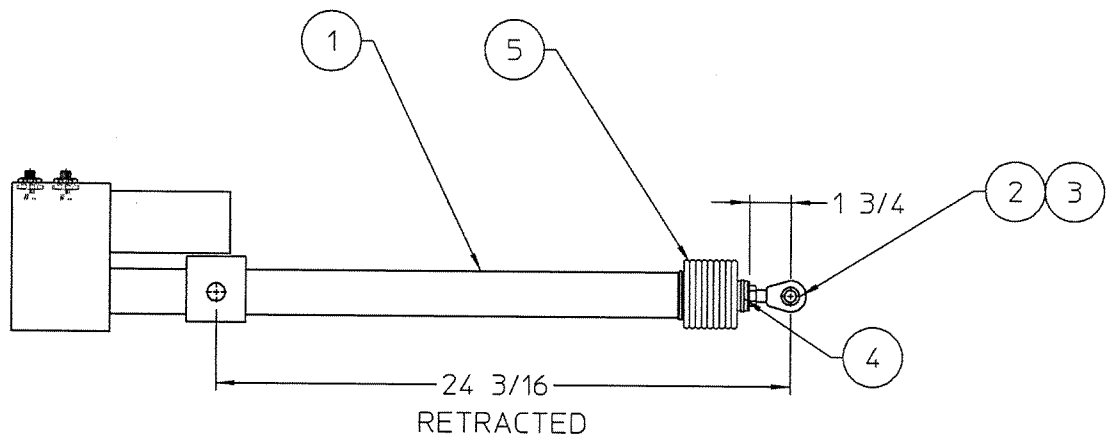

NOTE: APPLY LOCTITE 271
TO THREADS WHEN
ASSEMBLING ITS-2 & 3

FIG NO.	ITEM NO.	PART NUMBER	DESCRIPTION AND MATERIAL SIZE (REF.ONLY)	QTY
	5	A7347Y03	ACTUATOR BOOT	1
	4	L420492	TIE WRAP	1
	3	0-3652053-0-02	MALE ROD END 1/2-20	1
	2	A0055017	JAM NUT HEX 1/2-20	1
	1	C0046XAC	LINEAR ACTUATOR ASSY	1

IMPLIED TOLERANCES
ALL DIMENSIONS ARE IN INCHES-TOLERANCE UNLESS OTHERWISE SPECIFIED

NOMINAL SIZE RANGE		PLUS OR MINUS			NOMINAL SIZE RANGE		PLUS OR MINUS		
OVER	TO	FRACTION	2 PLACE DECIMAL	3 PLACE DECIMAL	OVER	TO	FRACTION	2 PLACE DECIMAL	3 PLACE DECIMAL
-	1	1/64	.01	.003	6	24	3/64	.03	.008
1	6	1/32	.02	.005	24	-	1/16	.05	.010

ANGULAR DIMENSIONS PLUS OR MINUS 1 DEGREE
ALL MACHINED SURFACES TO HAVE A SURFACE FINISH OF 125 MICROINCHES UNLESS OTHERWISE SPECIFIED.

WELDING SPECIFICATION

UNLESS OTHERWISE SPECIFIED ALL WELDS SHOULD ADHERE TO FAIRMONT TAMPER WELDING SPECIFICATION NO. 101

WEIGHT lbs.

3rd ANGLE PROJECTION

DO NOT SCALE 4

SHEET 1 CONT. ON –

DESCRIPTION Q4
LINEAR ACTUATOR ASSY

DRAWN PJG	DATE 05-29-02	MACHINE TYPE MK IV W/JUPITER
CHECKED HW	DATE 05-31-02	
APP-ENG JOC	DATE 05-31-02	
APP-MFG	DATE	
LAST ECR. 12509 .25	CHECKED hwj DATE 6-Jun-02	ENG.DWG.NO. D4713XAB

Fairmont Tamper™ 2401 Edmund Road-Box 20 Cayce-West Columbia, South Carolina 29171-0020 (803) 822-9160

THIS DOCUMENT CONTAINS PROPRIETARY INFORMATION AND SUCH INFORMATION MAY NOT BE DISCLOSED TO OTHERS FOR ANY PURPOSE OR USED FOR MANUFACTURING PURPOSES WITHOUT THE WRITTEN PERMISSION OF FAIRMONT TAMPER.

LIGHT SHIELDS INSTALLATION

DWG.NO. A7762WAA

ITEM	DESCRIPTION	PART NUMBER	QTY
001	LIGHT SHIELD	A8786X01	2
002	HINGE BRACKET	A7765X01	2
003	3/8-16 X 1 CAPSCREW	A0036066	4
004	NUT ELASTIC STOP	L40387	4
005	ANGLE BRACKET	Z686257	2
006	1/4-20 X 1/2 HHCAPSCR	A0036001	8
007	1/4-20 ESNA NUT	L41173	12
008	ROD	Z768505-001	2
009	3/8 REG PL WASHER	A0059003	2
010	1/8 X 3/4 COTTER PIN	A0068046	2
011	1/4-20 X 3/4 HHCAPSCR	A0036003	4

LIGHTS SHIELDS INSTL
DWG NO A7762WAA

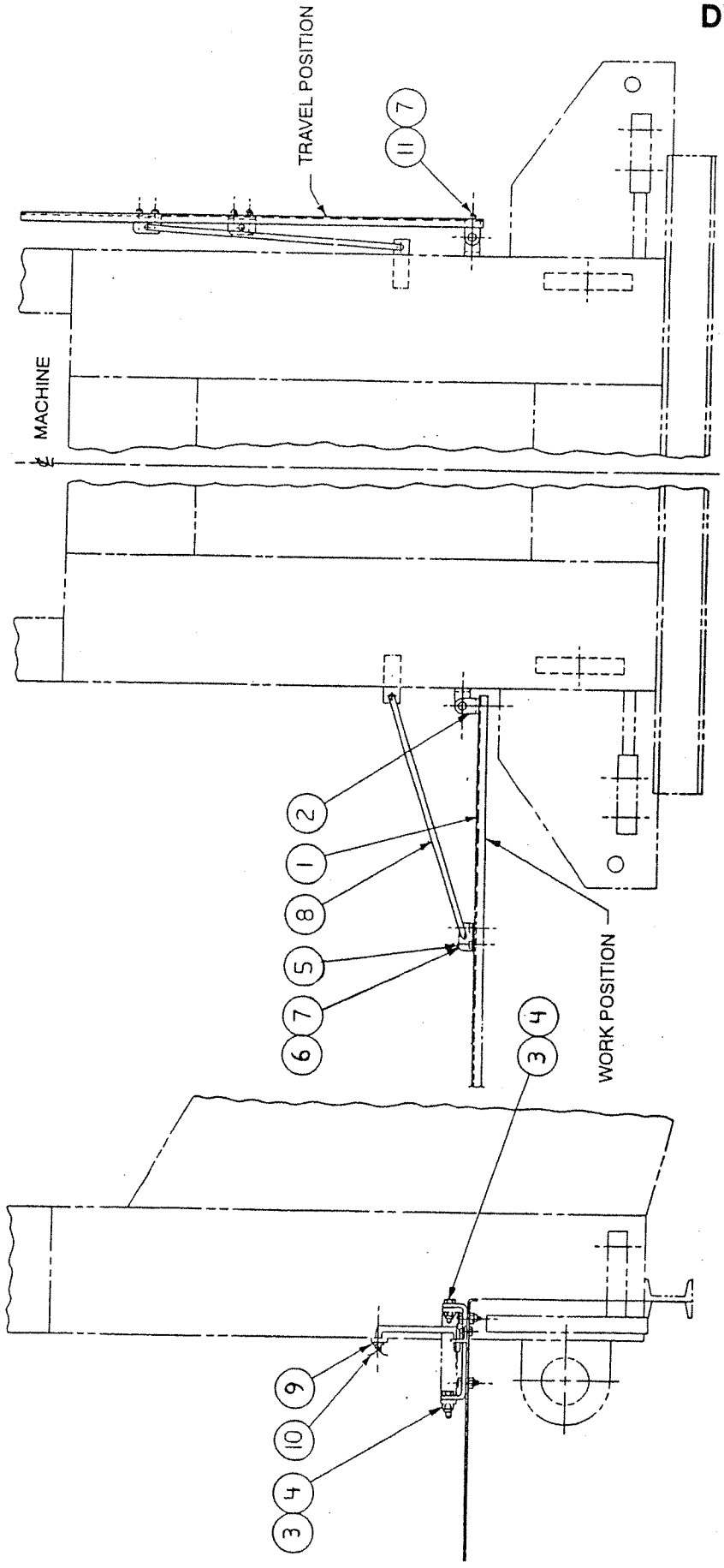

ENG.DWG.NO
G9426WAK

REVISIONS							
NO	ER	DESCRIPTION	ZONE	DR	CK	APP	MF
A	13116.33	NEW RELEASE		CJW	JO'C	AML	-

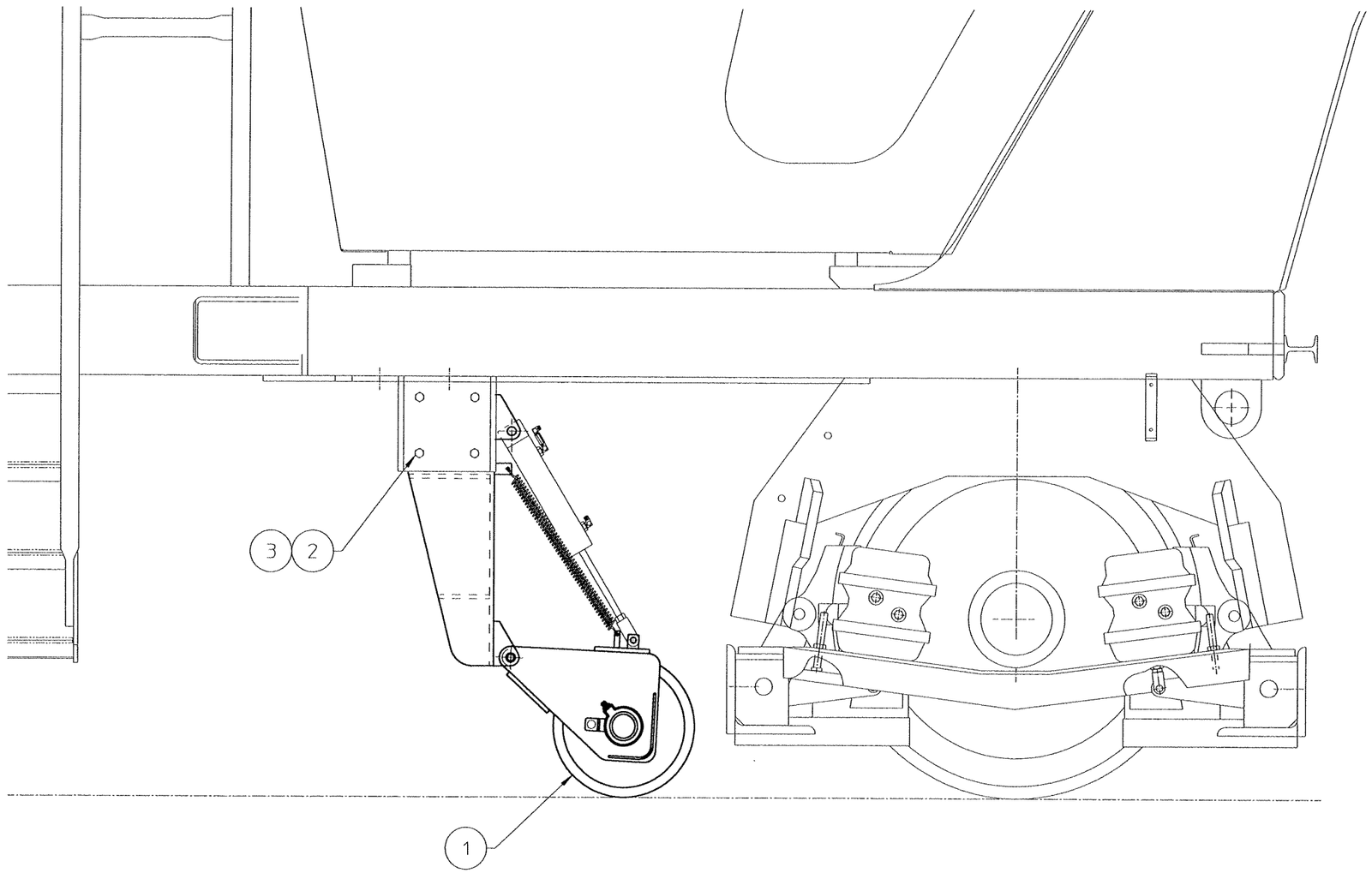

FIG NO.	ITEM NO.	PART NUMBER	DESCRIPTION AND MATERIAL SIZE (REF.ONLY)	QTY
	3	L40767	1/2-13 ESNA NUT	4
	2	A0036123	1/2-13 X 1 1/2 HHCS	4
	1	G9427WAL	CARRIAGE AND WHEEL ASSY	1

IMPLIED TOLERANCES
ALL DIMENSIONS ARE IN INCHES-TOLERANCE UNLESS OTHERWISE SPECIFIED

NOMINAL SIZE RANGE		PLUS OR MINUS			NOMINAL SIZE RANGE		PLUS OR MINUS		
OVER	TO	FRACTION	2 PLACE DECIMAL	3 PLACE DECIMAL	OVER	TO	FRACTION	2 PLACE DECIMAL	3 PLACE DECIMAL
-	1	1/64	.01	.003	6	24	3/64	.03	.008
1	6	1/32	.02	.005	24	-	1/16	.05	.010

ANGULAR DIMENSIONS PLUS OR MINUS 1 DEGREE

√ ALL MACHINED SURFACES TO HAVE A SURFACE FINISH OF 125 MICROINCHES UNLESS OTHERWISE SPECIFIED

WELDING SPECIFICATION

UNLESS OTHERWISE SPECIFIED ALL WELDS SHOULD ADHERE TO FAIRMONT TAMPER WELDING SPECIFICATION NO. 101

WEIGHT lbs

3rd ANGLE PROJECTION

DO NOT SCALE

SHEET 1 CONT. ON –

DESCRIPTION 124
ENCODER INSTL

DRAWN C.J.Wolf	DATE 07-11-05	MACHINE TYPE MARK VI JUPITER
CHECKED JO'C	DATE 07-11-05	
APP-ENG AML	DATE 07-11-05	
APP-MFG	DATE	
LAST ECR 13116 .33	CHECKED dwgn. DATE 19-Jul-05	ENG DWG.NO. G9426WAK

Fairmont Tamper
2401 Edmund Road-Box 20
Cayce-West Columbia,
South Carolina 29171-0020
(803) 822-9160

PLOT SCALE = -6

THIS DOCUMENT CONTAINS PROPRIETARY INFORMATION AND SUCH INFORMATION MAY NOT BE DISCLOSED TO OTHERS FOR ANY PURPOSE OR USED FOR MANUFACTURING PURPOSES WITHOUT THE WRITTEN PERMISSION OF FAIRMONT TAMPER.

ENG.DWG.NO.
G9427WAL

REVISIONS							
NO	ER	DESCRIPTION	ZONE	DR	CK	APP	MF
A	13116.33	NEW RELEASE		CJW	JO'C	AML	

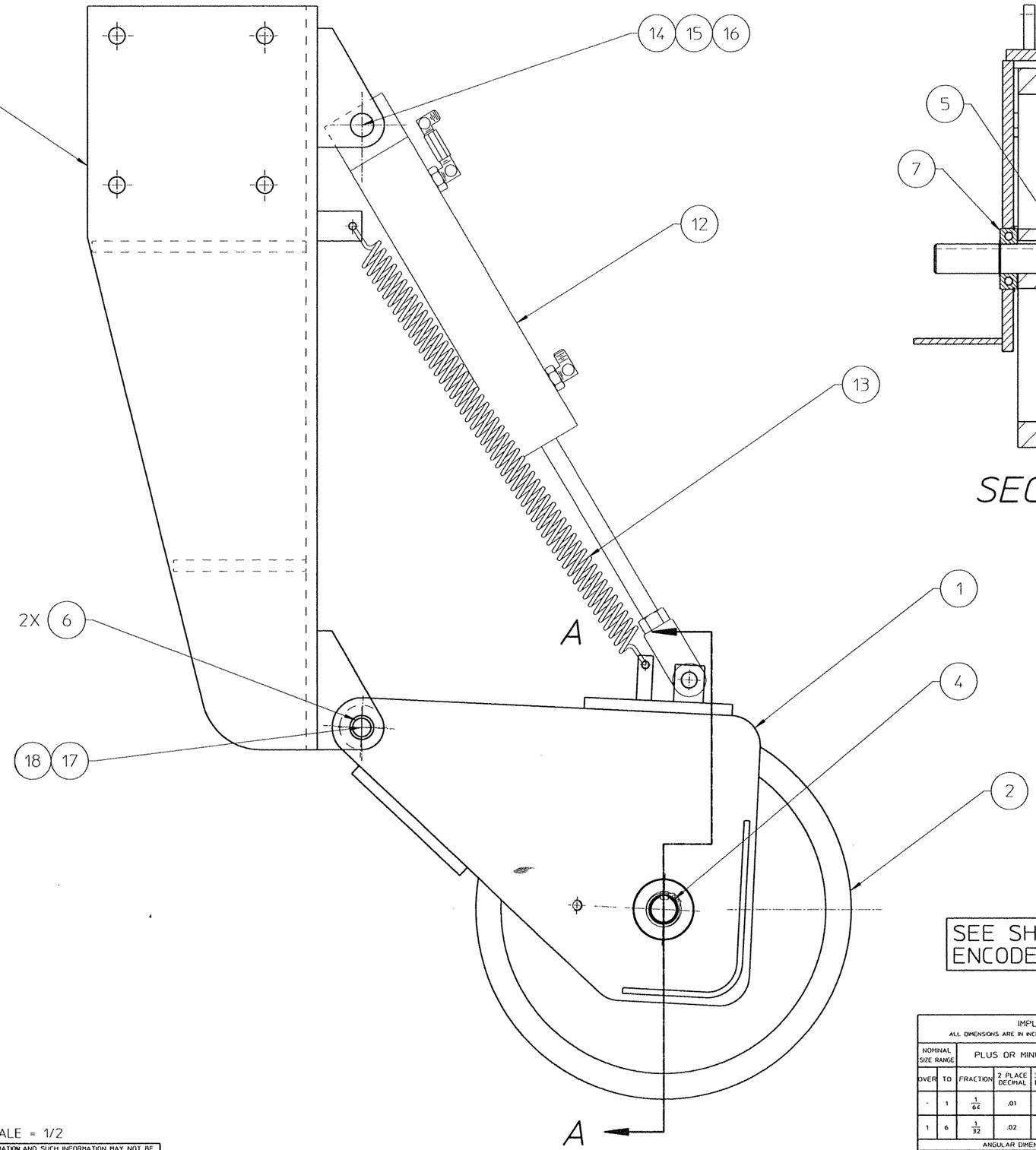

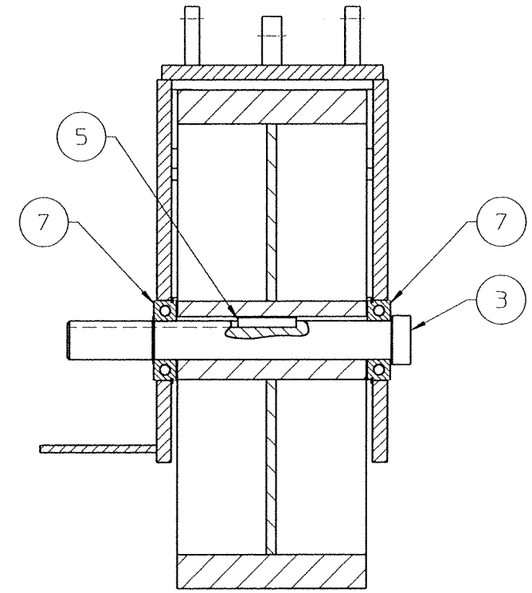

SECTION A-A

SEE SHEET 2 FOR ENCODER ASSEMBLY

FIG NO.	ITEM NO.	PART NUMBER	DESCRIPTION AND MATERIAL SIZE (REF.ONLY)	QTY
	20	H4938Y01	ENCODER KEY	1
	19	G6118XAA	ENCODER BRKT	1
	18	L41523	1/2-13 ESNA NUT	1
	17	Z752500-041	5/8-6 SHLD BLT	1
	16	A0068014	1/8 X 1-1/4 COTTER PIN	1
	15	A0059008	3/4 FLAT WASHER	2
	14	0-3015002-0-13	.746 X 2-11/32 CLEV PIN	1
	13	Z683672	SPRING	2
	12	A1901YAA	CYL ASSY	1
	11	A0060013	3/8 SAE WASHER	1
	10	A0036061	3/8-16 X 3/4 HHCS	1
	9	A0041004	6-32 X 1/2 SOC HD CS GR8	1
	8	2006977	ENCODER	1
	7	L422822	BALL BEARING	2
	6	L422823	PLAIN BEARING	2
	5	Z9668AR	1/4 SQ X 1-1/2 KEY	1
	4	L40456	RETAINING RING	1
	3	G9428Y01	ENCODER WHEEL AXLE	1
	2	B0356WAA	WHEEL	1
	1	G9572WAA	WHEEL CARRAIGE WLDT/MACH	1

IMPLIED TOLERANCES
ALL DIMENSIONS ARE IN INCHES-TOLERANCE UNLESS OTHERWISE SPECIFIED

NOMINAL SIZE RANGE		PLUS OR MINUS			NOMINAL SIZE RANGE		PLUS OR MINUS		
OVER	TO	FRACTION	2 PLACE DECIMAL	3 PLACE DECIMAL	OVER	TO	FRACTION	2 PLACE DECIMAL	3 PLACE DECIMAL
-	1	1/64	.01	.003	6	24	3/64	.03	.008
1	6	1/32	.02	.005	24	-	1/16	.05	.010

ANGULAR DIMENSIONS PLUS OR MINUS 1 DEGREE

ALL MACHINED SURFACES TO HAVE A SURFACE FINISH OF 125 MICROINCHES UNLESS OTHERWISE SPECIFIED.

WELDING SPECIFICATION

UNLESS OTHERWISE SPECIFIED ALL WELDS SHOULD ADHERE TO FAIRMONT TAMPER WELDING SPECIFICATION NO. 101

WEIGHT lbs

3rd ANGLE PROJECTION

DO NOT SCALE

SHEET 1 CONT. ON 2

DESCRIPTION 124: CARRIAGE AND WHEEL ASSY

DRAWN C.J.Wolf	DATE 07-11-05	MACHINE TYPE	MARK VI JUPITER
CHECKED JO'C	DATE 07-11-05		
APP-ENG AML	DATE 07-11-05		
APP-MFG	DATE		
LAST ECR. 13116.33	CHECKED (dvoin)	ENG.DWG.NO.	G9427WAL
	DATE 19-Jul-05		

Fairmont Tamper™
2401 Edmund Road-Box 20
Cayce-West Columbia,
South Carolina 29171-0020
(803) 822-9160

PLOT SCALE = 1/2

THIS DOCUMENT CONTAINS PROPRIETARY INFORMATION AND SUCH INFORMATION MAY NOT BE DISCLOSED TO OTHERS FOR ANY PURPOSE OR USED FOR MANUFACTURING PURPOSES WITHOUT THE WRITTEN PERMISSION OF FAIRMONT TAMPER.

ENG.DWG.NO.
G9427WAL

REVISIONS							
NO	ER	DESCRIPTION	ZONE	DR	CK	APP	MF
A	13116.33	NEW RELEASE		CJW	JO'C	AML	

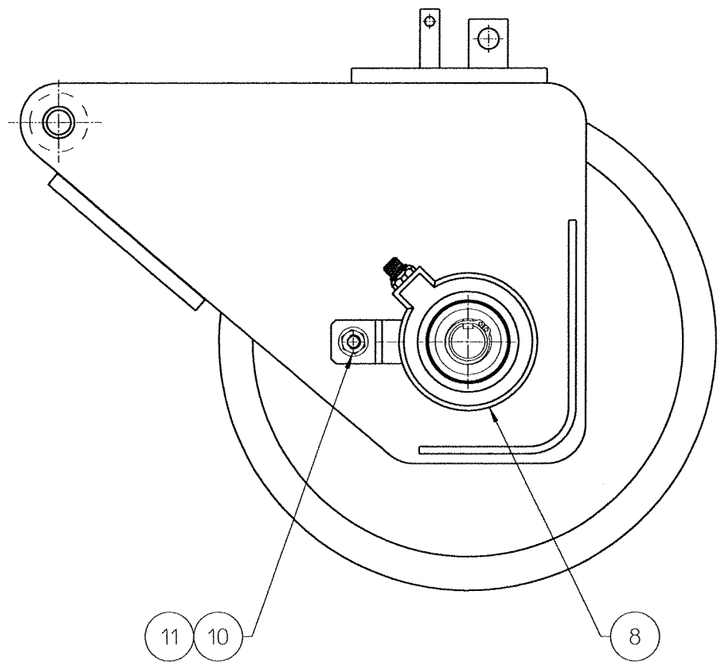

SEE NOTES
5 & 6

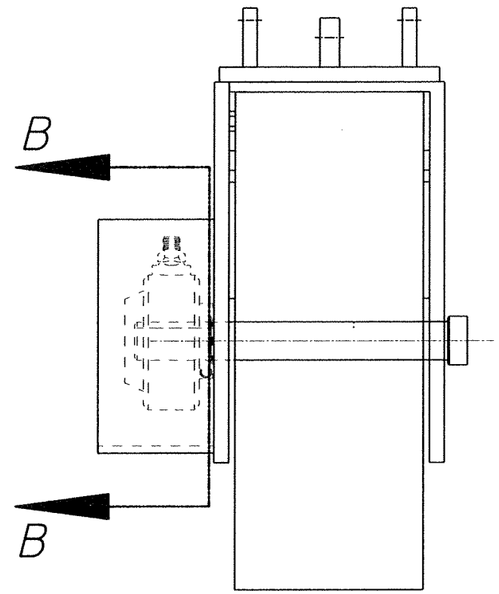

NOTES:

1. INSTALL THE TETHER ON THE ENCODER SO THAT CABLE CONNECTOR WILL BE LOCATED AS SHOWN

2. THE SPLIT COLLAR SHAFT CLAMP CAN BE TAKEN OFF AND ROTATED IN 90° INCREMENTS TO MAKE THE CLAMP SCREW EASIER TO ACCESS. REPLACE THE EXISTING SOCKET HEAD SCREW IN THE CLAMP WITH ITEM 9.

3. INSTALL ENCODER KEY, IT-20, IN SHAFT KEYWAY, IT-3, (IT MAY BE NECESSARY TO TAP IT IN WITH A PLASTIC HAMMER). THE END OF THE KEY, IT-20, SHOULD JUST BE TOUCHING THE SNAP RING, IT-4.

4. SLIDE THE ENCODER ON THE SHAFT, ALIGNING THE TONGUE ON THE KEY, IT-20, WITH ONE OF THE SLOTS IN THE ENCODER HOLLOW SHAFT. THEN APPLY LOCTITE 242 THREADLOCKER TO COLLAR SCREW, IT-9, AND TIGHTEN.

5. APPLY LOCTITE 242 THREADLOCKER & TIGHTEN TETHER BOLT 125 TO 150 IN LB.

6. TETHER SHOULD MOUNT FLAT AGAINST THE WHEEL CARRIER -SO THAT IT IS NOT BENT, STRETCHED OR TWISTED. REINSTALL IF NECESSARY.

SEE PARTS LIST ON SHEET #1

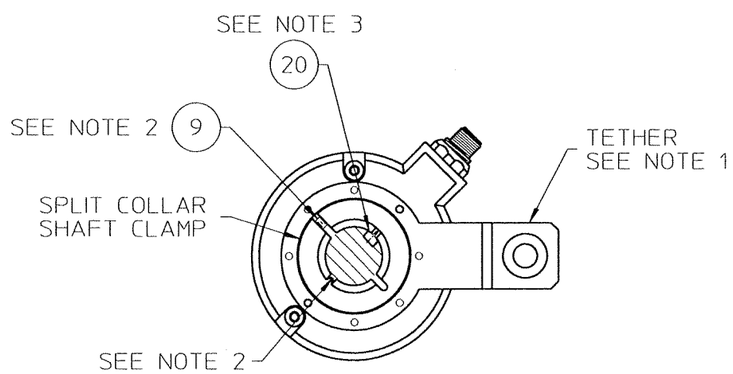

SECTION B-B

FIG NO.	ITEM NO.	PART NUMBER	DESCRIPTION AND MATERIAL SIZE (REF.ONLY)	QTY

IMPLIED TOLERANCES
ALL DIMENSIONS ARE IN INCHES-TOLERANCE UNLESS OTHERWISE SPECIFIED

NOMINAL SIZE RANGE		PLUS OR MINUS			NOMINAL SIZE RANGE		PLUS OR MINUS		
OVER	TO	FRACTION	2 PLACE DECIMAL	3 PLACE DECIMAL	OVER	TO	FRACTION	2 PLACE DECIMAL	3 PLACE DECIMAL
-	1	1/64	.01	.003	6	24	3/64	.03	.008
1	6	1/32	.02	.005	24	-	1/16	.05	.010

ANGULAR DIMENSIONS PLUS OR MINUS 1 DEGREE

√ ALL MACHINED SURFACES TO HAVE A SURFACE FINISH OF 125 MICROINCHES UNLESS OTHERWISE SPECIFIED.

WELDING SPECIFICATION

UNLESS OTHERWISE SPECIFIED ALL WELDS SHOULD ADHERE TO FAIRMONT TAMPER WELDING SPECIFICATION NO. 101

WEIGHT lbs

3rd ANGLE PROJECTION

DO NOT SCALE

SHEET 2 CONT. ON –

DESCRIPTION 124
CARRIAGE AND WHEEL ASSY

DRAWN C.J.Wolf	DATE 07-11-05	MACHINE TYPE MARK VI JUPITER
CHECKED JO'C	DATE 07-11-05	
APP-ENG AML	DATE 07-11-05	
APP-MFG	DATE	
LAST ECR 13116.33	CHECKED dvan	ENG DWG.NO. G9427WAL
	DATE 19-Jul-05	

Fairmont Tamper
2401 Edmund Road-Box 20
Cayce-West Columbia,
South Carolina 29171-0020
(803) 822-9160

PLOT SCALE = 1/2

THIS DOCUMENT CONTAINS PROPRIETARY INFORMATION AND SUCH INFORMATION MAY NOT BE DISCLOSED TO OTHERS FOR ANY PURPOSE OR USED FOR MANUFACTURING PURPOSES WITHOUT THE WRITTEN PERMISSION OF FAIRMONT TAMPER.

Hydraulic System and Components

It No	Part Number	Description	Qty
1	C9094XAB	PUMP CONTROL VALVE ASSY	2
~~2*~~	~~L41515~~	~~CHECK VALVE 1/2 NPT~~	~~2~~
3	D8305Y01	PROP RED/RLV VALVE	2
4	C9087VAB	JACK (REGEN) VALVE ASSY	1
5	C9112VAD	BIAS & CLAMP VALVE ASSY	1
6	C9104VAC	LINER & CLAMP VALVE ASSY	1
7	G2139WAB	WK/HD VALVES ASSY	1
8	C9095WAE	TRACTION VALVE ASSY	2
9	G2130WAB	SQUEEZE VALVE ASSY	1
10	C1140Y04	SOL RELIEF VALVE	2
11	L40549	INLINE CHECK VALVE	4
~~12*~~	~~L41209~~	~~CHECK VALVE 3/8 NPT~~	~~2~~
13	4011115	OIL COOLER ASSY	1
14	4007525	OIL COOLER GUARD ASSY	1
15	L425375	1 1/2 CHECK VALVE	2
16	A5748Y01	IN-LINE FILTER	1
17	4010822	RETURN MANIFOLD ASSY	1
18	L420176	JIC - MP (LONG)	1
19	0-3304107-0-20	REDUCER 2NPTM - 1 1/4NPTF	1
20	0-3304112-0-08	-20 MP X -20 FP X -20 FP	1
21	L410395	2" STREET ELBOW	1
22	L420148	JIC X NPT STR 2"	4
23	L41224	2" 45 DEG STREET ELBOW	2
24	0-3304128-0-17	-12 SADDLE FITTING	4
25	0-3304128-0-19	SADDLE FITTING (-16 JIC)	2

It No	Part Number	Description	Qty
26	0-3304128-0-24	SADDLE FITTING (-16 JIC)	4
27	0-3304128-0-25	SADDLE FITTING (-20 JIC)	2
28*	0-3304122-0-26	2 MALE STRAIGHT TUBE ADAPTER	3
29*	0-3304122-0-22	1 1/2 MALE STRAIGHT TUBE ADAPTER	2
30	0-3304122-0-21	ADAPTER -20 JIC TO -24 TUBE STR	5
31*	0-3304009-0-22	ADAPTOR -32 ORB X 2"NPTF	3
32*	0-3304179-0-01	ADAPTER	2
33	0-3336021-0-18	CHECK VALVE 1 ORB	2
34*	L41232	PUMP FLANGE 2"	2
35	G0686XAE	TRAC DISC ALIGN VLV ASSY	1
36	A0758Y14	ORIFICE FITTING 0.125	2
37	D4437X07	CLAMP PLATE	8
38	D4437X08	CLAMP PLATE	24
39	A0730Y04	VALVE, 3 WAY SOL 24VDC	1
40	C9102WAA	W/H TRAVERSE VALVE ASSY	1
41	D4437X05	HOSE CLAMP (9 HOLE)	4
42	D4437X06	HOSE CLAMP (3 HOLE)	12
43	0-3304128-0-21	SADDLE FITTING (-20 JIC)	2
44	0-3304015-0-14	1 1/2 JIC TEE	4
45	L423245	-12 JIC TEE	2
46	L41582	5/16-18 HEX LOCK NUT	36
47	A0036041	5/16-18 X 2 3/4 HHCS	36
48	0-3334049-0-12	RELIEF VALVE	1
49	C9090XAA	VALVE ASSY, AXLE LOCKOUT	1
50	A0729Y06	SOLENOID VALVE 2-WAY	2

It No	Part Number	Description	Qty
51	4008374	TRANSDUCER, HYDRAULIC PRESS.	3
52	A0758Y06	ORIFICE FITTING 0.031	1
~~57*~~	~~0-3335012-0-01~~	~~FLOW REGULATOR~~	~~2~~
58	0-3361006-0-03	SUBPLATE (D03)	1
59	C0993Y07	DIR VALVE (2-POS/4-WAY)	1
60	D0334Y09	BRKT, VALVE	1
61*	L41228	1/4 MALE QUICK DISC	5
~~62*~~	~~D0334Y03~~	~~BRKT, VALVE~~	~~2~~
63*	0-3304017-0-33	-32 ORB X -32 JIC 90	2
64*	0-3304148-0-14	-32 JIC SW -32 JIC 90 ADAPT	1
65	0-3335031-0-15	FLOW CONTROL VALVE (D03)	1
66*	0-3304132-0-16	1 1/2 X 2 JCI TUBE REDUCER	2

CONFIDENTIAL
© COPYRIGHT 2001 HARSCO TRACK TECHNOLOGIES. THIS DRAWING OR DOCUMENT IS THE PROPERTY OF HARSCO TRACK TECHNOLOGIES AND EMBODIES CONFIDENTIAL INFORMATION, TRADE SECRET INFORMATION, AND/OR KNOW-HOW THAT IS THE PROPERTY OF HARSCO TRACK TECHNOLOGIES. BY ACCEPTING THIS DRAWING OR DOCUMENT, THE RECIPIENT AGREES (1) NOT TO PROVIDE, OR OTHERWISE MAKE AVAILABLE, THE DRAWING OR DOCUMENT, OR ANY INFORMATION OR KNOW HOW EMBODIED THEREIN, TO ANY THIRD PARTY AND (2) NOT TO REPRODUCE OR USE THE DRAWING OR DOCUMENT TO MANUFACTURE ANY APPARATUS OR DEVICE, WITHOUT THE PRIOR WRITTEN AUTHORIZATION OF HARSCO TRACK TECHNOLOGIES.

SOLID EDGE DRAWING

IMPLIED TOLERANCES
ALL DIMENSIONS ARE IN INCHES - TOLERANCE UNLESS OTHERWISE SPECIFIED

MATING SIZE RANGE		INCH PLUS OR MINUS		MATING SIZE RANGE		METRIC PLUS OR MINUS	
OVER	TO	2 PLACE DECIMAL	3 PLACE DECIMAL	OVER	TO	1 PLACE DECIMAL	2 PLACE DECIMAL
0	6	.03	.005	0	150	.8	.13
6	24	.04	.005	150	600	1.0	.20
24	-	.06	.010	-	600	1.5	.25

UNLESS OTHERWISE SPECIFIED ALL MACHINED SURFACES WILL HAVE:
A SURFACE FINISH OF 125 MICROINCHES
ANGULAR TOLERANCE OF +-30'
CONCENTRICITY WITHIN .015

THIRD ANGLE PROJECTION

UNLESS OTHERWISE SPECIFIED ALL WELDS SHOULD ADHERE TO THE LATEST HTT WELDING SPECIFICATION 101

CHANGE	R/L	REVISION	DATE
ECN-100967	A	RELEASE	3/1/07
ECN-101063	B	DEL IT 2,12,57,62, ADD IT 65 AND SHT 2 - WAS PARTS LIST ONLY	5 May 07
101127	C	ADD ITEM 66 BPA	6.18.07

Description: HYDRAULIC INTERCONNECT
Drawing Number: ----------
Machine Type: MK VI NZ 42
Model: 4013194.asm
Drawn: mtollefson
Date Drawn: 3/1/07
Weight: 0.0 lbm
Scale: -------
APVD Dwg: JOC
APVD ChDwg: JOC
Mat'l

HTT
Harsco Track Technologies
Harsco
Columbia, SC

Part Number: 4013194
Size: D
Sheet: 1 of 2

Plotted by badler on 6/29/2007 4013194.dft

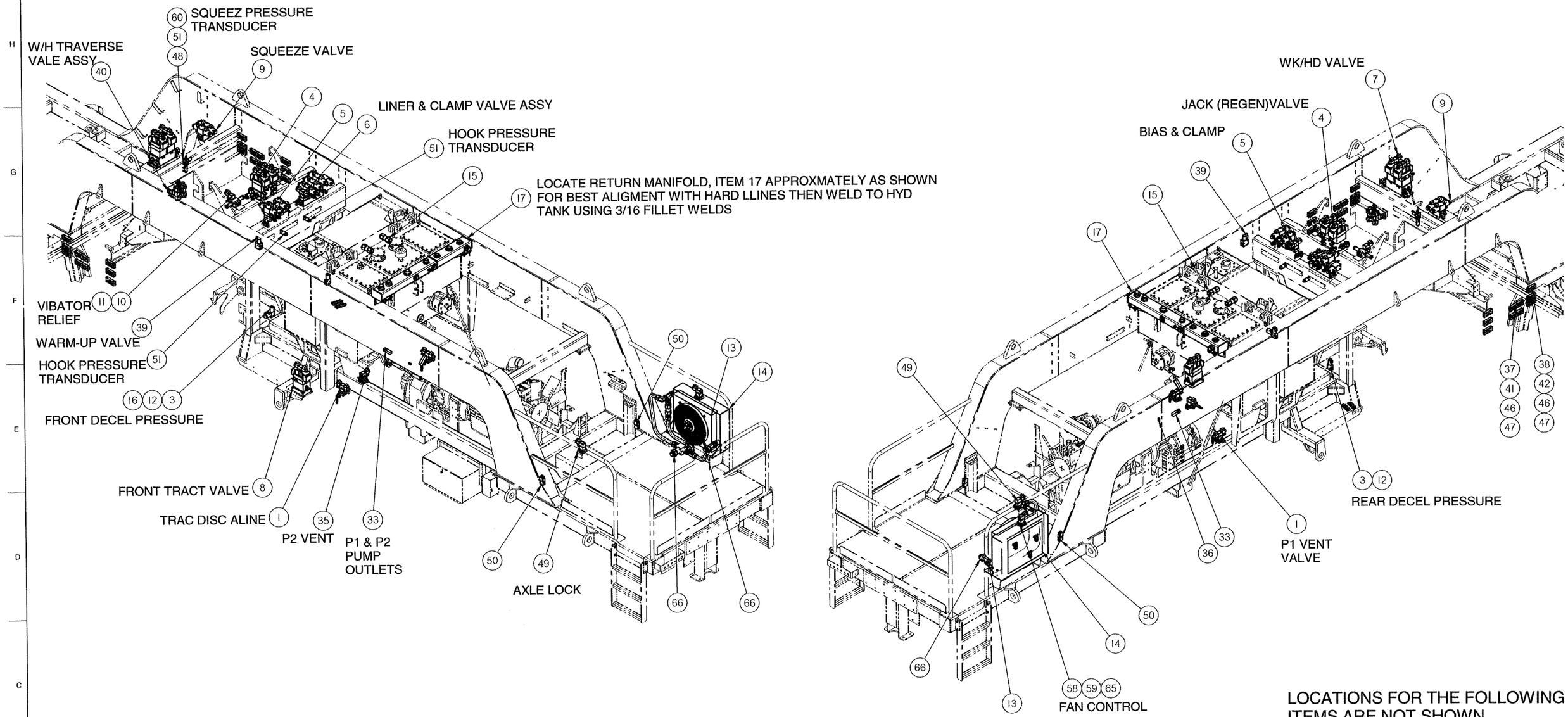

LOCATIONS FOR THE FOLLOWING ITEMS ARE NOT SHOWN

18 19 20 21 22 23 24 25 26

27 28 29 30 31 32 34 43 44 45

52 61 63 64

CONFIDENTIAL

© COPYRIGHT 2001 HARSCO TRACK TECHNOLOGIES. THIS DRAWING OR DOCUMENT IS THE PROPERTY OF HARSCO TRACK TECHNOLOGIES AND EMBODIES CONFIDENTIAL INFORMATION, TRADE SECRET INFORMATION, AND/OR KNOW-HOW THAT IS THE PROPERTY OF HARSCO TRACK TECHNOLOGIES. BY ACCEPTING THIS DRAWING OR DOCUMENT, THE RECIPIENT AGREES (1) NOT TO PROVIDE, OR OTHERWISE MAKE AVAILABLE, THE DRAWING OR DOCUMENT, OR ANY INFORMATION OR KNOW-HOW EMBODIED THEREIN, TO ANY THIRD PARTY AND (2) NOT TO REPRODUCE OR USE THE DRAWING OR DOCUMENT TO MANUFACTURE ANY APPARATUS OR DEVICE, WITHOUT THE PRIOR WRITTEN AUTHORIZATION OF HARSCO TRACK TECHNOLOGIES.

SOLID EDGE DRAWING

IMPLIED TOLERANCES

ALL DIMENSIONS ARE IN INCHES - TOLERANCE UNLESS OTHERWISE SPECIFIED

NOMINAL SIZE RANGE	IN	INCH PLUS OR MINUS 2 PLACE DECIMAL	3 PLACE DECIMAL	NOMINAL SIZE RANGE	MM	METRIC PLUS OR MINUS 1 PLACE DECIMAL	2 PLACE DECIMAL
0	6	.03	.005	0	150	.8	.13
6	24	.04	.008	150	600	1.0	.20
24	-	.06	.010	-	600	1.5	.25

UNLESS OTHERWISE SPECIFIED ALL MACHINED SURFACES WILL HAVE:
A SURFACE FINISH OF 125 MICROINCHES
ANGULAR TOLERANCE OF ± 30'
CONCENTRICITY WITHIN .010

THIRD ANGLE PROJECTION

UNLESS OTHERWISE SPECIFIED ALL WELDS SHOULD ADHERE TO THE LATEST HTT WELD-ING SPECIFICATION 101

CHANGE	R/L	REVISION	DATE
ECN-100967	A	RELEASE	3/1/07
ECN-101063	B	DEL IT 2,12,57,62, ADD IT 65 AND SHT 2 - WAS PARTS LIST ONLY	5 May 07
101127	C	ADD IT 66 BPA	6.18.07

Description: HYDRAULIC INTERCONNECT

Drawing Number: ----------

Machine Type: MK VI NZ 42

Model: 4013194.asm

Weight: 0.0 lbm

Scale: -----

Drawn: mtollefson 3/1/07

APVD Dwg: JOC APVD Dtlng: JOC

Mat'l

HTT
Harsco Track Technologies
Harsco
Columbia, SC

Part Number: 4013194 | Size: D | Sheet: 2 of 2

Plotted by badler on 6/29/2007 4013194.dft

ENG DWG NO.
C9094XAB

REVISIONS							
NO	ER	DESCRIPTION	ZONE	DR	CK	APP	MF
1	8095163	NEW RELEASE	---	LES	DGV	AML	
2	861631	ITEM 2 P/N WAS A1070Y14	P/L	LES			

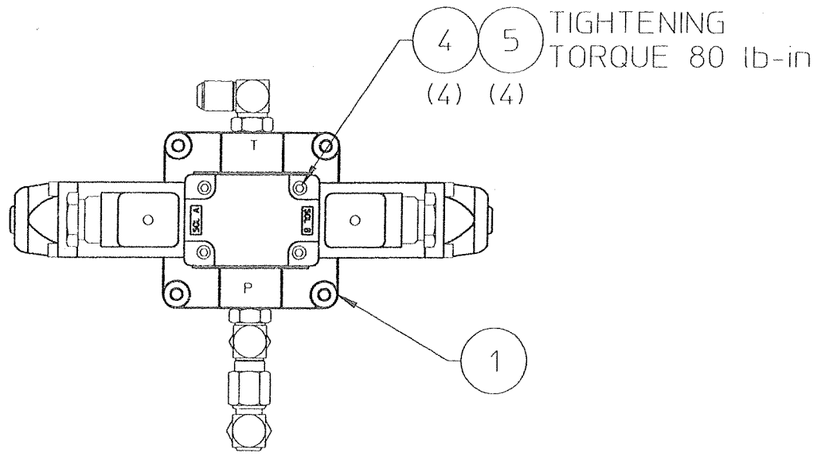

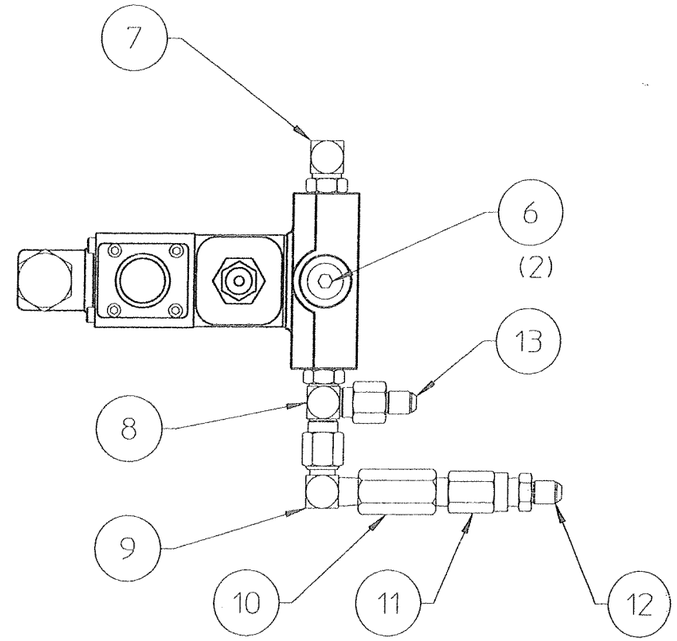

PUMP PRESSURE
CONTROL VALVE

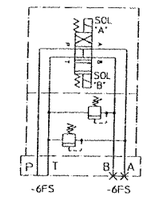

ELECTRICAL DIN CONNECTORS
ARE SHOWN FOR REFERENCE ONLY.

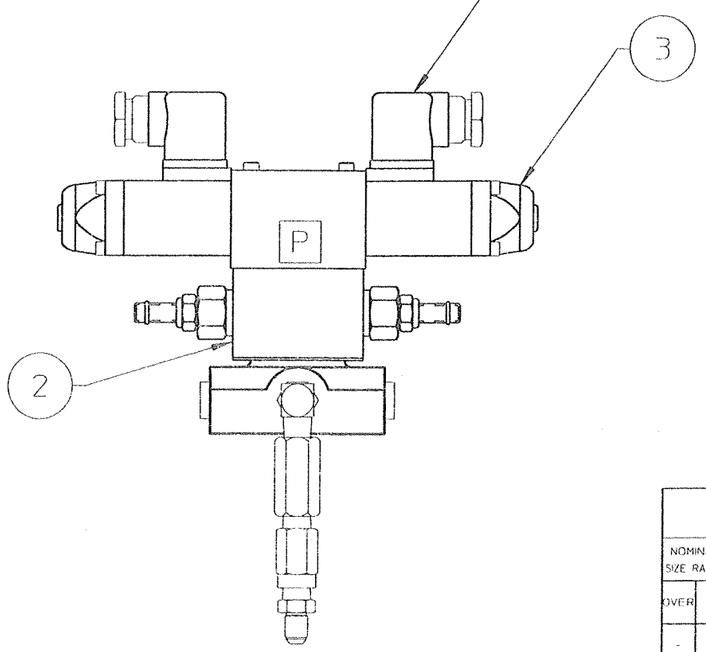

FIG NO.	ITEM NO.	PART NUMBER	DESCRIPTION AND MATERIAL SIZE (REF ONLY)	QTY	
	13	0-3304132-0-01	3/8 JIC - 1/4 JIC REDUCER	1	
	12	L411385	1/4 MALE NPT -JIC ADAPTER	1	
	11	L40316	1/4 NPT MALE/FEMALE SNUBBER	1	
	10	A0758Y06	1/4 FEMALE NPT FIXED ORIFICE(.031)	1	
	9	0-3304192-0-02	3/8 JIC SWIVEL - 1/4 MALE NPT 90°	1	
	8	0-3304181-0-04	3/8 O-RING BOSS - JIC TEE	1	
	7	L411939	3/8 O-RING BOSS - JIC 90°	1	
	6	0-3304203-0-03	3/8 O-RING BOSS PLUG	2	
	5	A0041025	#10-24 SOC HD CAP SCR X 4	4	
	4	A0061025	#10 HIGH COLLAR LOCK WASHER	4	
	3	C0993Y01	(D03) HYD VALVE 3 POS 4-WAY	1	
	2	A1070Y16	RELIEF VALVE SANDWICH D03	1	
	1	0-3361006-0-03	SUBPLATE D03	1	

IMPLIED TOLERANCES
ALL DIMENSIONS ARE IN INCHES-TOLERANCE UNLESS OTHERWISE SPECIFIED

NOMINAL SIZE RANGE		PLUS OR MINUS			NOMINAL SIZE RANGE		PLUS OR MINUS		
OVER	TO	FRACTION	2 PLACE DECIMAL	3 PLACE DECIMAL	OVER	TO	FRACTION	2 PLACE DECIMAL	3 PLACE DECIMAL
-	1	1/64	.01	.003	6	24	3/64	.03	.008
1	6	1/32	.02	.005	24	-	1/16	.05	.010

ANGULAR DIMENSIONS PLUS OR MINUS 1 DEGREE

√ ALL MACHINED SURFACES TO HAVE A SURFACE FINISH OF 125 MICRONCHES UNLESS OTHERWISE SPECIFED

WELDING SPECIFICATION

UNLESS OTHERWISE SPECIFIED ALL WELDS SHOULD ADHERE TO FAIRMONT TAMPER WELDING SPECIFICATION NO 101

WEIGHT lbs

3rd ANGLE PROJECTION

DO NOT SCALE

SHEET 1 CONT ON --

DESCRIPTION 124
PUMP CONTROL VALVE ASSY

DRAWN	DATE	MACHINE TYPE
LES	01/20/97	MARK VI
CHECKED DGV	DATE 01/21/97	
APP-ENG AML	DATE 01/21/97	
APP-MFG	DATE	
LAST ECR 861631	CHECKED hwl DATE 23-Apr-97	ENG DWG NO C9094XAB

Fairmont Tamper
2401 Edmund Road-Box 20
Cayce-West Columbia
South Carolina 29171-0020
(803) 822-9160

THIS DOCUMENT CONTAINS PROPRIETARY INFORMATION AND SUCH INFORMATION MAY NOT BE DISCLOSED TO OTHERS FOR ANY PURPOSE OR USED FOR MANUFACTURING PURPOSES WITHOUT THE WRITTEN PERMISSION OF FAIRMONT TAMPER

ENGDWG C9087VAB

NO	EN	DESCRIPTION	ZONE	DR	CK	APP	MF
1	09512	NEW RELEASE					

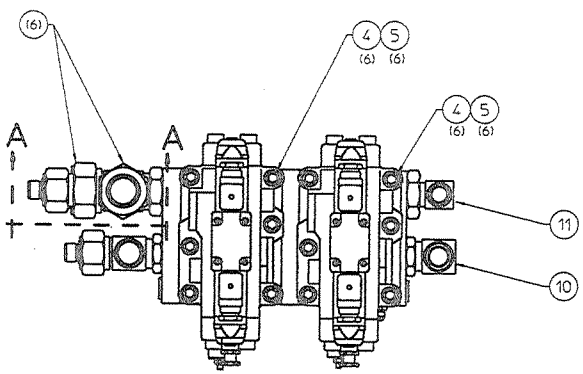

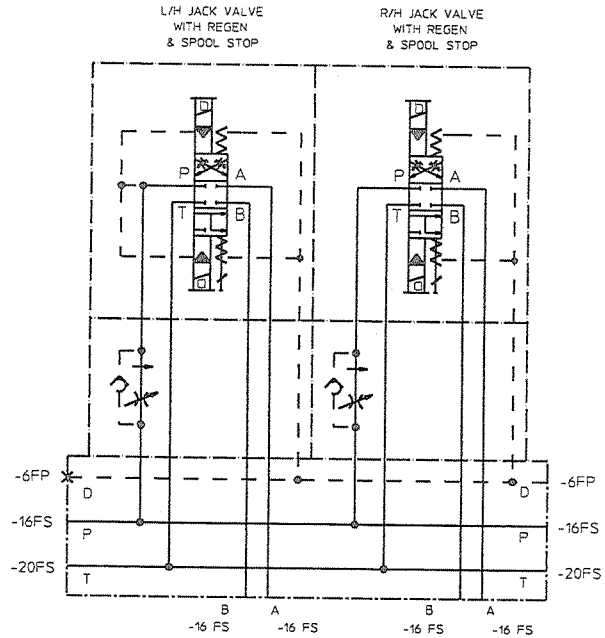

REMOVE & RETURN ELECTRICAL CONNECTORS TO STORES UNDER P/N 0-3230020-0-01

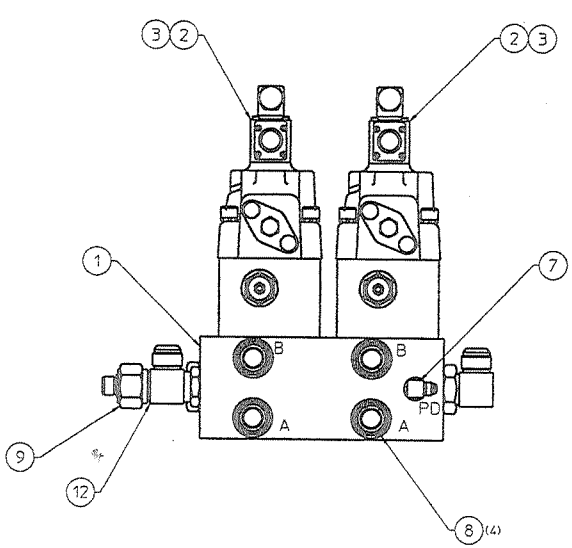

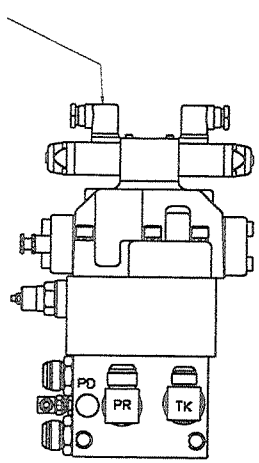

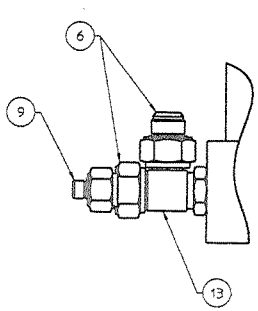

SECTION "A_A"

	ITEM	PART NUMBER	DESCRIPTION	QTY	
	13	0-3304181-0-05	-20 OR BOSS-JIC-JIC TEE	1	
	12	0-3304181-0-02	-16 OR BOSS-JIC-JIC TEE	1	
	11	0-3304017-0-22	-20 ORB X -16 JIC X 90° ELBOW	1	
	10	L421701	-16 ORB X JIC X 90° ELBOW	1	
	9	0-3304132-0-08	1" X 1/2" JIC REDUCER	2	
	8	L424015	-16 ORB X JIC X STRAIGHT	4	
	7	L411939	3/8 ORB/JIC 90°	1	
	6	0-3304132-0-10	1 1/4" X 1" JIC REDUCER	2	
	5	A0041139	1/2-13 X 6 SHCS	12	
	4	A0061029	1/2 HCLW	12	
	3	A4490Y07	HYD VALVE (D08 DBL SOL)	2	
	2	B9529Y01	FLOW CONTROL (D08 SANDWICH)	2	
	1	A0963Y01	D08 MANIFOLD (2 STATION)	1	

FIG NO	ITEM NO	PART NUMBER	DESCRIPTION AND MATERIAL SIZE (REF ONLY)	QTY
			JACK (REGEN) VALVE ASSY	

APPLIED TOLERANCES
ALL DIMENSIONS ARE IN INCHES-TOLERANCE UNLESS OTHERWISE SPECIFIED

NOMINAL SIZE RANGE		PLUS OR MINUS		NOMINAL SIZE RANGE		PLUS OR MINUS	
OVER	TO	FRACTION	3 PLACE DECIMAL	OVER	TO	FRACTION	3 PLACE DECIMAL
0	6	1/32	.015	6	24	1/16	.015
6	24	1/16	.062	24		1/8	.125

ANGULAR DIMENSIONS PLUS OR MINUS 1 DEGREE
ALL MACHINED SURFACES TO HAVE A SURFACE FINISH 125 MICROINCHES

WELDING SPECIFICATION
UNLESS OTHERWISE SPECIFIED ALL WELDS SHOULD ADHERE TO FAIRMONT TAMPER WELDING SPECIFICATION NO. 101

DO NOT SCALE

SCALE 1 : 1

MARK VI

Fairmont Tamper

C9087VAB

THIS DOCUMENT CONTAINS PROPRIETARY INFORMATION AND SUCH INFORMATION MAY NOT BE DISCLOSED TO OTHERS FOR ANY PURPOSE OR USED FOR MANUFACTURING PURPOSES WITHOUT THE WRITTEN PERMISSION OF FAIRMONT TAMPER

ENG DWG NO C9112VAD

REVISIONS							
NO	ER	DESCRIPTION	ZONE	DR	CK	APP	MF
1	9015	NEW RELEASE					
2	9023	UPDATED SCHEMATIC		PJG	DGV	LES	
C	9901	UPDATED SCHEMATIC		PJG	JDC	JDC	

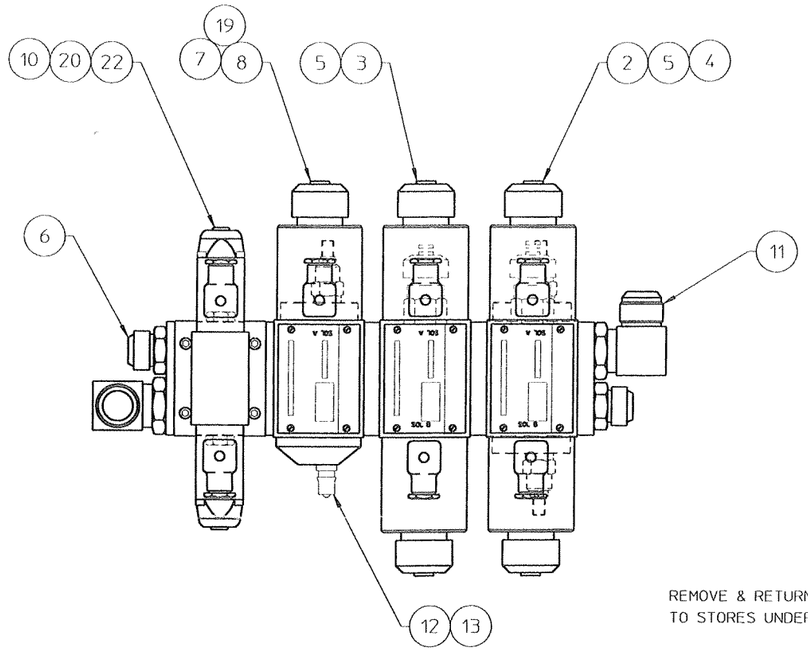

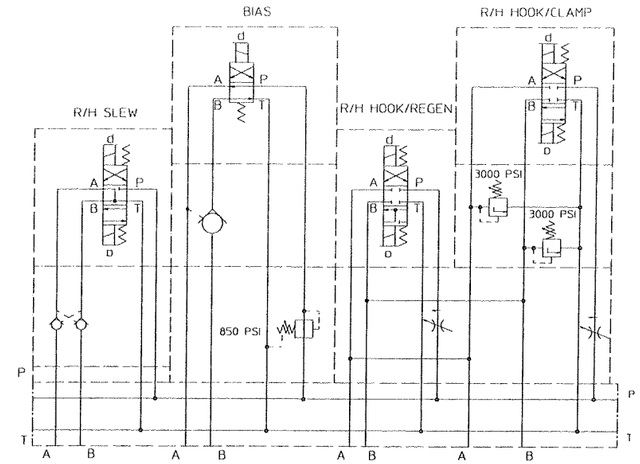

REMOVE & RETURN ELECTRICAL CONNECTORS TO STORES UNDER P/N 0-3230020-0-01

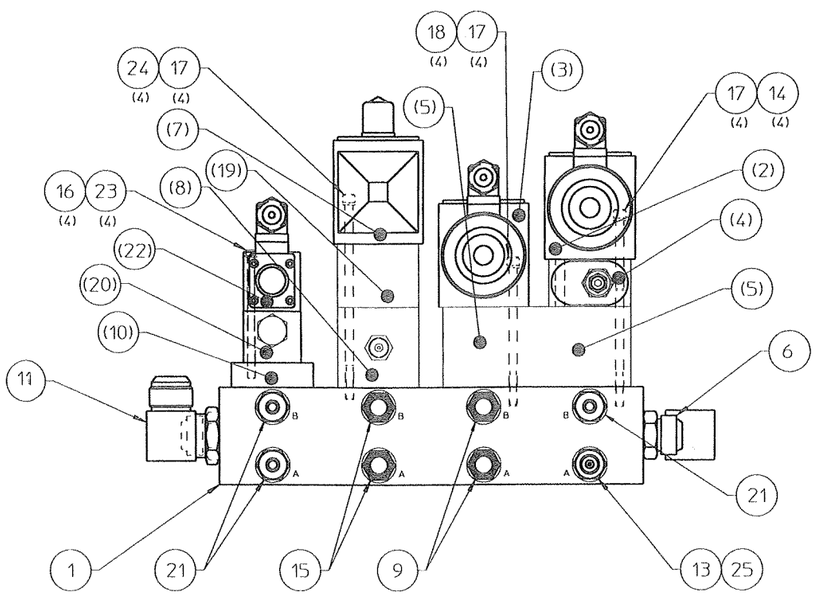

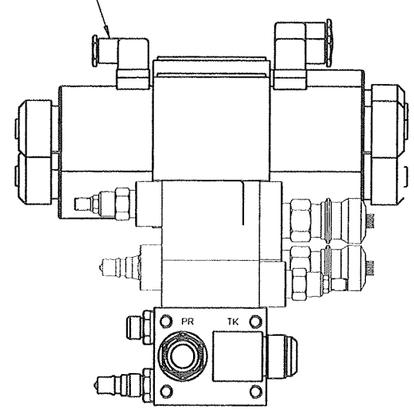

ITEM	PART NUMBER	DESCRIPTION	QTY
25	G5787Y02	NPT (M) ORB ADAPTER	1
24	A0041218	1/4-20 UNC X 6" LG. SHCS	4
23	A0061025	#10 HIGH COLLAR LOCKWASHER	4
22	C0993Y03	SOL.OP., DIR.VALVE (3POS-4WAY)	1
21	L423028	1/2 O-RING BOSS - 1/4 JIC STR.	3
20	0-3336024-0-07	P.O. CHECK VALVE (D03)	1
19	0-3336003-0-02	P.O. CHECK VALVE (D05)	1
18	A0041197	1/4-20 UNC X 4-1/4 LG. SHCS	4
17	A0061027	1/4 HIGH COLLAR LOCKWASHER	12
16	A0041029	#10-24 UNC X 3 3/4 LG. SHCS	4
15	L420150	1/2 O-RING BOSS - JIC STR.	2
14	A0041056	1/4-20 UNC X 5-3/4 LG. SHCS	4
13	L41228	QUICK DISCONNECT 1/4 FP	2
12	L41079	1/4 MP - MP	1
11	L424285	3/4 O-RING BOSS - 1"JIC 90°	2
10	0-3360011-0-03	D05 - D03 ADAPTER PLATE	1
9	L424556	1/2 O-RING BOSS - 3/4 JIC STR.	2
8	0-3334013-0-05	PR. REDUCING VALVE (D05)	1
7	0-3333037-0-10	SOL.OP., DIR.VALVE (2POS-4WAY)	1
6	L424351	3/4 O-RING BOSS - 1"JIC STR.	2
5	H2247Y01	DUAL FLOW REG ASSY (D05)	1
4	A1070Y19	RELIEF VALVE SANDWICH (D05)	1
3	0-3333037-0-18	SOL.OP., DIR.VALVE (3POS-4WAY)	1
2	0-3333037-0-09	SOL.OP., DIR.VALVE (3POS-4WAY)	1
1	A0757Y04	INLINE BAR MANIFOLD (4 STAT.)	1

FIG NO	ITEM NO.	PART NUMBER	DESCRIPTION AND MATERIAL SIZE (REF.ONLY)	QTY

APPLIED TOLERANCES
ALL DIMENSIONS ARE IN INCHES-TOLERANCE UNLESS OTHERWISE SPECIFIED

NOMINAL SIZE RANGE		PLUS OR MINUS			NOMINAL SIZE RANGE		PLUS OR MINUS		
OVER	TO	FRACTION	2 PLACE DECIMAL	3 PLACE DECIMAL	OVER	TO	FRACTION	2 PLACE DECIMAL	3 PLACE DECIMAL
-	1	1/64	.01	.003	6	24	3/64	.03	.008
1	6	1/32	.02	.005	24		1/16	.05	.010

ANGULAR DIMENSIONS PLUS OR MINUS 1 DEGREE
ALL MACHINED SURFACES TO HAVE A SURFACE FINISH OF 125 INCHRANCHES UNLESS OTHERWISE SPECIFIED

WELDING SPECIFICATION
UNLESS OTHERWISE SPECIFIED ALL WELDS SHOULD ADHERE TO FAIRMONT TAMPER WELDING SPECIFICATION NO 101

MATERIAL

DO NOT SCALE

THIRD ANGLE PROJECTION

SHEET 1 OF 1

DESCRIPTION: BIAS & CLAMP VALVE ASSY

DRAWN: PJG DATE: 07-24-00

MODEL FOR: MARK VI

REVISED: HW DATE: 08-09-00

APPROVED: APL DATE: 08-08-00

ENGRG: DATE:

Fairmont Tamper
2401 Bishop Road-Box 29
Cryer-West Caldwell
South Carolina 29171-0030
(803) 822-9160

ASTEX 13184 .1

CAGE CODE 8V60

DATE 19-Oct-05

ENG DWG NO C9112VAD

THIS DOCUMENT CONTAINS PROPRIETARY INFORMATION AND SUCH INFORMATION MAY NOT BE DISCLOSED TO OTHERS FOR ANY PURPOSE OR USED FOR MANUFACTURING PURPOSES WITHOUT THE WRITTEN PERMISSION OF FAIRMONT TAMPER

ENGDWGNO C9104VAC

REVISIONS							
NO	ER	DESCRIPTION	ZONE	DR	CK	APP	RF
1	12102-16	NEW RELEASE		PJG			
B	13184-1	UPDATED SCHEMATIC FOR 11-28		PJG	JOC	JOC	

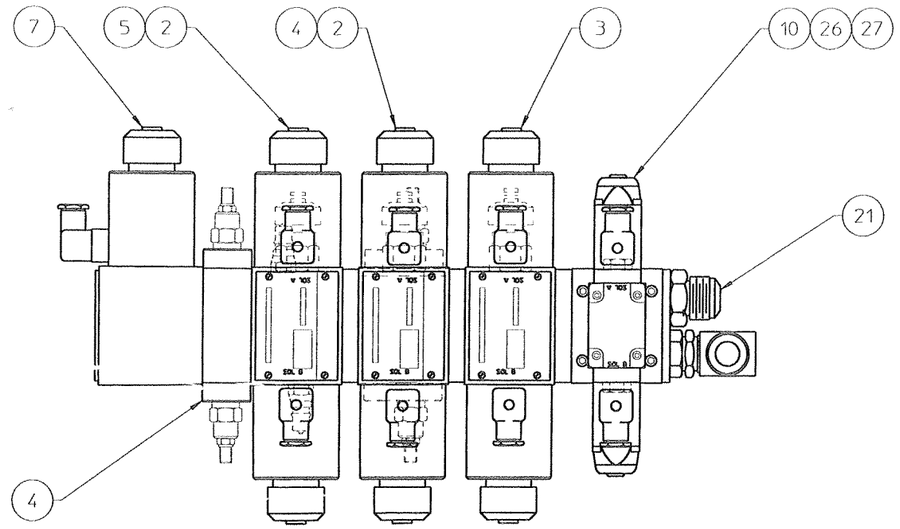

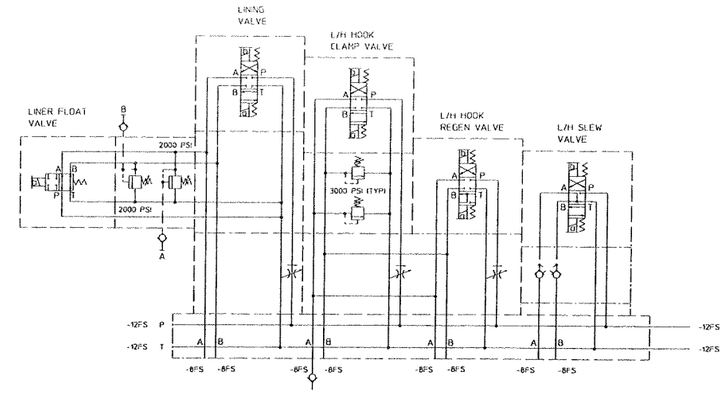

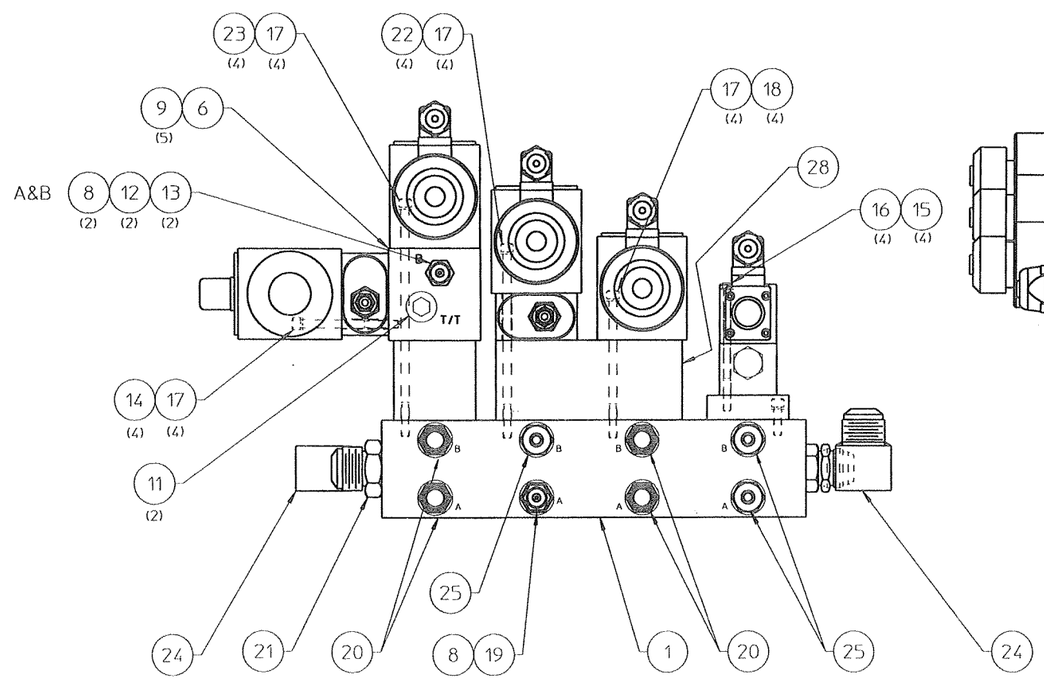

ELECTRICAL DIN CONNECTORS ARE SHOWN FOR REFERENCE ONLY

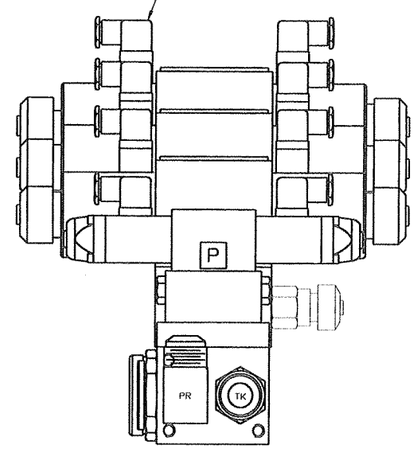

	28	H2247Y01	DUAL FLOW REG ASSY	1
	27	C0993Y03	SOL.OP., DIR.VALVE (3POS-4WAY)	1
	26	0-3336024-0-07	P.O. CHECK SANWICH D03	1
	25	L423028	1/2 O-RING BOSS - 1/4 JIC STR.	3
	24	L424285	3/4 O-RING BOSS X 1" JIC 90°	2
	23	A0041224	1/4-20 UNC X 7" LG. SHCS	4
	22	A0041055	1/4-20 UNC X 5-1/2 LG. SHCS	4
	21	L424351	3/4 O-RING BOSS - 1"JIC STR.	2
	20	L424556	1/2 O-RING BOSS - 3/4 JIC STR.	4
	19	G5787Y02	NPT (M) X ORB ADAPTER	1
	18	A0041197	1/4-20 UNC X 4-1/4 LG. SHCS	4
	17	A0061027	1/4 HIGH COLLAR LOCKWASHER	16
	16	A0041024	#10-24 UNC X 3 1/2" LG. SHCS	4
	15	A0061025	#10 HIGH COLLAR LOCKWASHER	4
	14	A0041049	1/4-20 UNC X 3" LG. SHCS	4
	13	L425372	3/8 O-RING BOSS - 1/4 FM	2
	12	L41079	1/4 MP - MP	2
	11	0-3304203-0-03	SOCKET HEAD O-RING PLUG 3/8	2
	10	0-3360011-0-03	D05 - D03 ADAPTER PLATE	1
	9	0-3391007-0-14	O-RING (1/16 X 1/2 X 5/8)	5
	8	L41228	QUICK DISCONNECT 1/4 FP	3
	7	0-3333037-0-08	SOL.OP., DIR.VALVE (2POS-4WAY)	1
	6	C3759W02	D05 SANDWICH MANIFOLD	1
	5	0-3335024-0-11	PRES. COMP. FLOW CONNTROL	1
	4	A1070Y19	D05 RELIEF VALVE SANDWICH	2
	3	0-3333037-0-18	SOL.OP., DIR.VALVE (3POS-4WAY)	1
	2	0-3333037-0-09	SOL.OP., DIR.VALVE (3POS-4WAY)	2
	1	A0757Y04	INLINE BAR MANIFOLD (4 STAT.)	1
ITEM	PART NUMBER	DESCRIPTION		QTY

THIS DOCUMENT CONTAINS PROPRIETARY INFORMATION AND SUCH INFORMATION MAY NOT BE DISCLOSED TO OTHERS FOR ANY PURPOSE OR USED FOR MANUFACTURING PURPOSES WITHOUT THE WRITTEN PERMISSION OF FAIRMONT TAMPER.

IMPLIED TOLERANCES
ALL DIMENSIONS ARE IN INCHES-TOLERANCE UNLESS OTHERWISE SPECIFIED

NOMINAL SIZE RANGE		PLUS OR MINUS			NOMINAL SIZE RANGE		PLUS OR MINUS		
OVER	TO	FRACTION	2 PLACE DECIMAL	3 PLACE DECIMAL	OVER	TO	FRACTION	2 PLACE DECIMAL	3 PLACE DECIMAL
-	3	1/64	.01	.003	6	24	3/64	.03	.008
3	6	1/32	.02	.005	24	-	1/16	.05	.010

ANGULAR DIMENSIONS PLUS OR MINUS 1 DEGREE
ALL MACHINED SURFACES TO HAVE A SURFACE FINISH OF 125 MICROINCHES UNLESS OTHERWISE SPECIFIED

FIG NO	ITEM NO	PART NUMBER	DESCRIPTION AND MATERIAL SIZE (REF.ONLY)	QTY

WELDING SPECIFICATION

UNLESS OTHERWISE SPECIFIED ALL WELDS SHOULD ADHERE TO FAIRMONT TAMPER WELDING SPECIFICATION NO 101

DO NOT SCALE

SHEET 1 OF 1 — LAST ECO 13184

DESCRIPTION: LINER & CLAMP VALVE ASSY

DRAWN	PJG	DATE 07-24-0
CHECKED	HW	DATE 08-09-0
ENGRG	AML	DATE 08-08-0
APPROVED		DATE

MACHINE TYPE: MARK VI

Fairmont Tamper
2401 Edward Rauch Blvd 20
Saint Paul, Minnesota
Phone (651) 771-0020
800 832-9180

CHECKED BY: DATE 12-Oct-05

ENGDWGNO: C9104VAC

G2139WAB

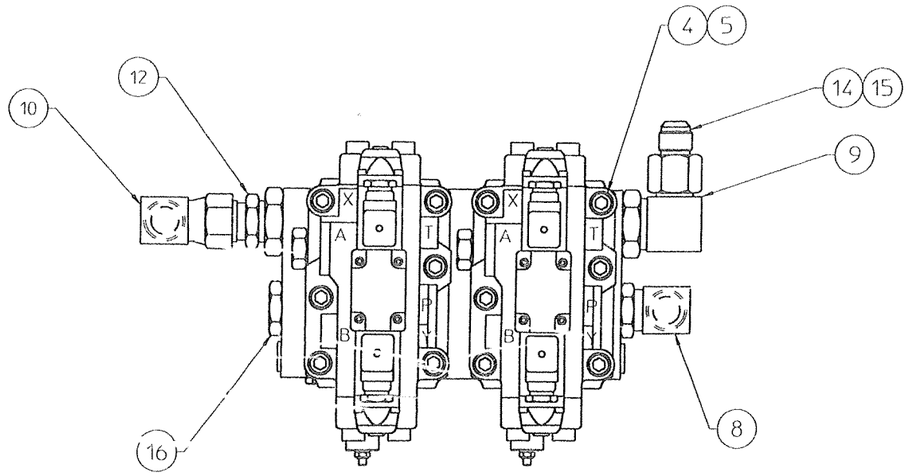

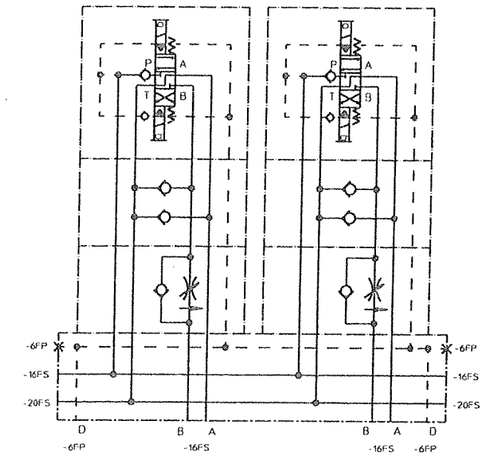

REMOVE & RETURN ELECTRICAL CONNECTORS
TO STORES UNDER P/N 0-3230020-0-01

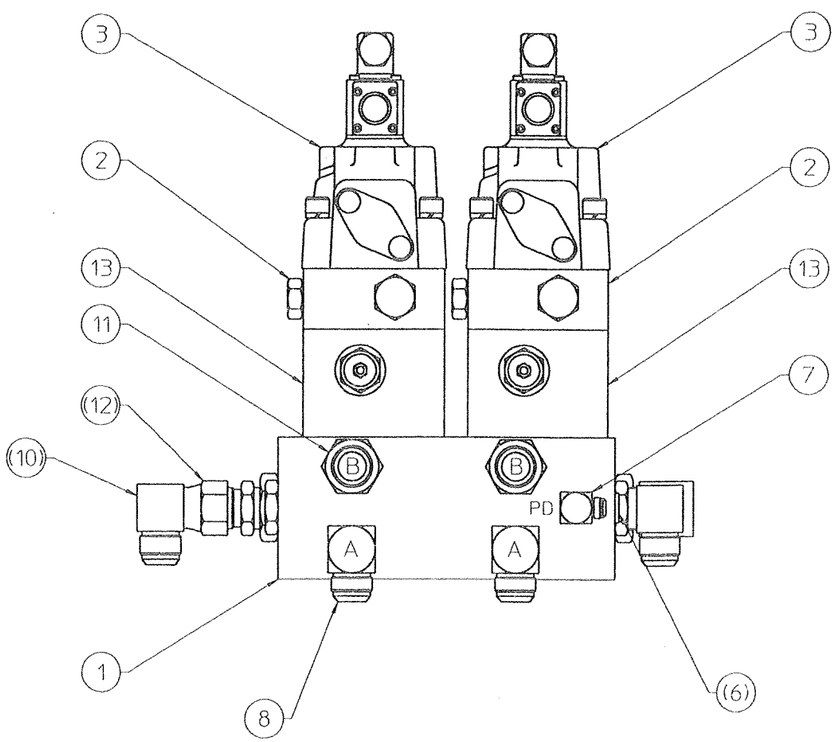

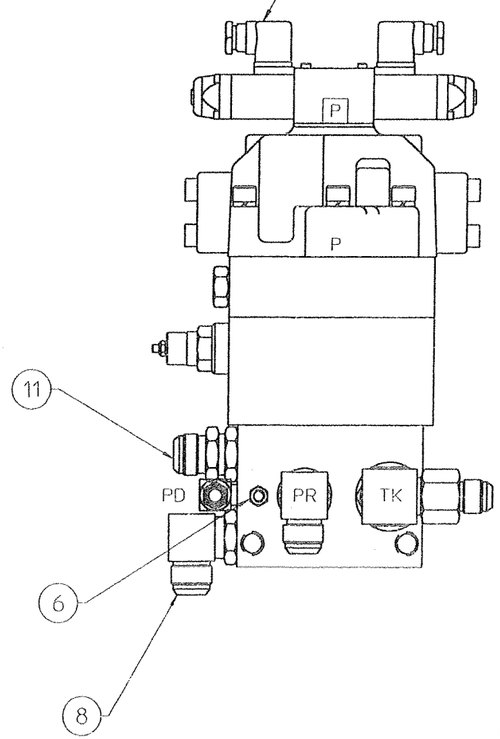

REVISIONS

NO	ER	DESCRIPTION	ZONE	DR	CK	APP	MF
1	8678.82	NEW RELEASE		LES	DGV	AML	
2	10554.14	ITEM 13 ADDED ITEM 5 P/N WAS A0041148		LES	HWJ	AML	
3	10554.17	ITEM 7 P/N WAS 0-3304017-0-02 ITEM 10 P/N WAS L424676		LES	HWJ	AML	
4	11952.1	ITEM 3 P/N WAS A4490Y05		LES	DGV	AML	
5	12102.18	QTY IT-6 WAS 3, QTY ITS 8 & 9 WAS 2, IT-10 WAS L424632, IT-11 WAS 0-3304028-0-22 & QTY WAS 4, IT-12 WAS L423023 & QTY WAS 4, ADDED ITEMS 14-16 & UPDATED PICTORIAL.		PJG	HW	AML	
6	12289.1	IT-7 WAS L423097		PJG	HW	AML	

FIG NO	ITEM NO	PART NUMBER	DESCRIPTION AND MATERIAL SIZE (REF ONLY)	QTY
	16	0-3304030-0-08	O-RING BOSS PLUG (1")	1
	15	0-3304120-0-10	-20 JIC TUBE NUT	1
	14	0-3304034-0-11	-20 X -12 JIC REDUCER	1
	13	B9529Y05	FLOW CONTROL VALVE (D08)	2
	12	0-3304028-0-30	1-1/4 ORING - 1" JIC STR	1
	11	L424015	1" ORING -JIC STR	2
	10	0-3304148-0-12	1 1/4 JIC SW 90°	1
	9	L422763	-20 ORB X JIC X 90° ELBOW	1
	8	L421701	-16 ORB X JIC X 90° ELBOW	3
	7	L411939	3/8 ORB/JIC 90°	1
	6	0-3304203-0-03	-6 ORB SOC HD PLUG	1
	5	A0041219	1/2-13 X 8" LONG SHCS	12
	4	A0061029	1/2 HCLW	12
	3	A4490Y08	HYD VALVE (D08)	2
	2	A2803Y01	CHECK VALVE (D08)	2
	1	A0963Y01	D08 MANIFOLD (2 STATION)	1

IMPLIED TOLERANCES
ALL DIMENSIONS ARE IN INCHES-TOLERANCE UNLESS OTHERWISE SPECIFIED

NOMINAL SIZE RANGE OVER	TO	PLUS OR MINUS FRACTION	2 PLACE DECIMAL	3 PLACE DECIMAL	NOMINAL SIZE RANGE OVER	TO	PLUS OR MINUS FRACTION	2 PLACE DECIMAL	3 PLACE DECIMAL
-	1	1/64	.01	.003	6	24	3/64	.03	.008
1	6	1/32	.02	.005	24	-	1/16	.05	.010

ANGULAR DIMENSIONS PLUS OR MINUS 1 DEGREE
ALL MACHINED SURFACES TO HAVE A SURFACE FINISH OF 125 MICROINCHES UNLESS OTHERWISE SPECIFIED

WELDING SPECIFICATION
UNLESS OTHERWISE SPECIFIED ALL WELDS SHOULD ADHERE TO FAIRMONT TAMPER WELDING SPECIFICATION NO 101

WEIGHT lbs
3rd ANGLE PROJECTION
DO NOT SCALE
SHEET 1 CONT ON -

DESCRIPTION 124
WK/HD VALVES ASSY

DRAWN LES	DATE 04-22-97	MACHINE TYPE MARK VI
CHECKED DGV	DATE 05-05-97	
APP ENG AML	DATE 04-25-97	
APP MFG	DATE	
LAST ECR 12289 1	CHECKED TWH DATE 14-Dec-00	DRAWING NO G2139WAB

Fairmont Tamper
2401 Edmund Road-Box 20
Cayce-West Columbia
South Carolina 29171-0320
(803) 822-9160

THIS DOCUMENT CONTAINS PROPRIETARY INFORMATION AND SUCH INFORMATION MAY NOT BE DISCLOSED TO OTHERS FOR ANY PURPOSE OR USED FOR MANUFACTURING PURPOSES WITHOUT THE WRITTEN PERMISSION OF FAIRMONT TAMPER

C9095WAE

REVISIONS							
NO	ER	DESCRIPTION	ZONE	DR	CK	APP	MF
1	8095.91	NEW RELEASE		LES	DGV	AML	
2	8095.116	ITEM 3 P/N WAS 0-3334057-0-05 ITEM 7 & 8 ADDED ITEM 10 WAS L426008 ITEM 12, 13 & 14 DELETED		MLT	JGA	LES	
3	10554.16	ITEM 7, 8 & NOTE DELETED		LES	HWJ	AML	
4	11603.16	ITEM 15 & 16 ADDED		LES	HWJ	AML	
5	128431	ITEM 16 P/N WAS 0-3420001-0-03		LES	HWJ	AML	
6	117111.53	ITEM 2 P/N WAS C8214YAA	P/L	LES	HWJ	AML	

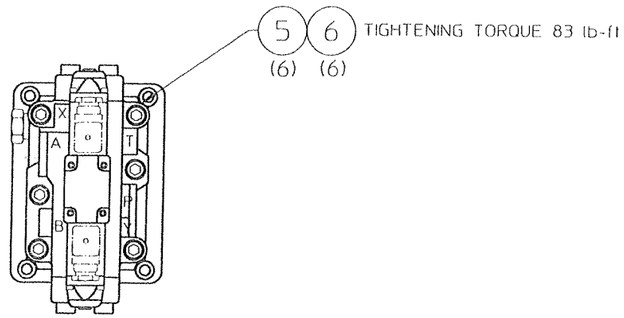

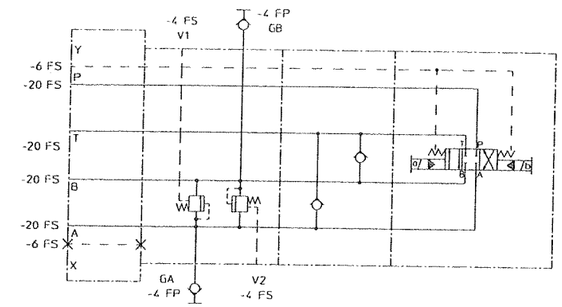

SCHEMATIC SYMBOL

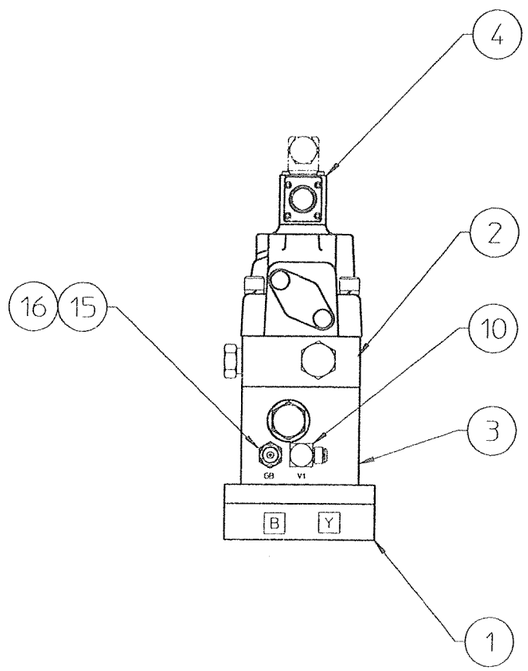

REMOVE & DISCARD O-RINGS
INSTALL ITEMS 7 & 8
7 8

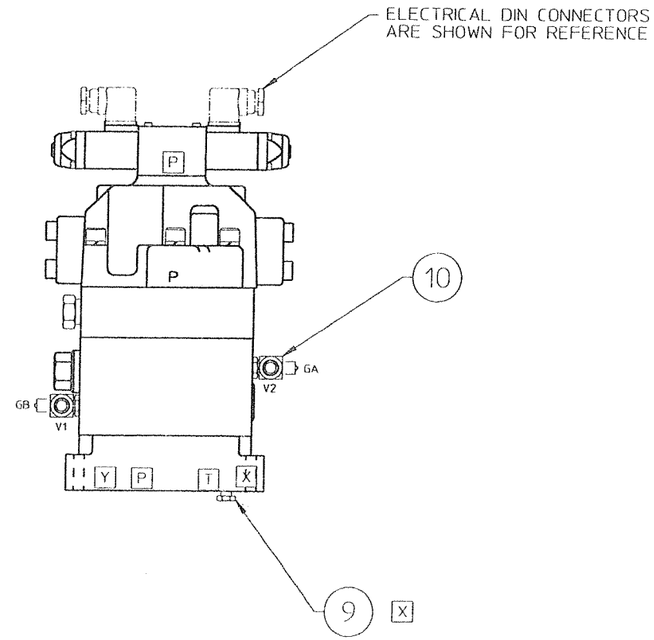

FIG NO	ITEM NO	PART NUMBER	DESCRIPTION AND MATERIAL SIZE (REF ONLY)	QTY
	16	L41228	1/4 NPT MALE DISCONNECT	2
	15	L41079	1/4 NPT HEX NIPPLE	2
	~~14~~	~~L441385~~	~~1/4 NPT X -4 JIC STR FITTING~~	~~2~~
	~~13~~	~~L41208~~	~~CHECK VALVE 3 PSI 1/4 NPT(F)~~	~~2~~
	~~12~~	~~0-3304192-0-02~~	~~1/4 NPT X -6 JIC SW X 90° FITTING~~	~~2~~
	11	BLANK		
	10	L425932	-4 ORB X -4 JIC 90° FITTING	2
	9	L424676	-6 ORB PLUG	1
	~~8~~	~~B5392Y38~~	~~O-RING (POLY)~~	~~2~~
	~~7~~	~~B5392Y10~~	~~O-RING (POLY)~~	~~4~~
	6	A0061028	1/2 HIGH COLLAR LOCK WASHER	6
	5	A0041219	1/2-13 UNC X 8" LG SHCS	6
	4	A4490Y03	DIRECTIONAL CONTROL VALVE D08	1
	3	0-3334057-0-07	RELIEF VALVE D08	1
	2	A2803Y04	CHECK VALVE SANDWICH (D08)	1
	1	0-3361004-0-05	SUBPLATE D08 (-20 ORB)	1

IMPLIED TOLERANCES
ALL DIMENSIONS ARE IN INCHES-TOLERANCE UNLESS OTHERWISE SPECIFIED

NOMINAL SIZE RANGE		PLUS OR MINUS			NOMINAL SIZE RANGE		PLUS OR MINUS		
OVER	TO	FRACTION	2 PLACE DECIMAL	3 PLACE DECIMAL	OVER	TO	FRACTION	2 PLACE DECIMAL	3 PLACE DECIMAL
-	1	1/64	01	003	6	24	3/64	03	008
1	6	1/32	02	005	24	-	1/16	05	010

ANGULAR DIMENSIONS PLUS OR MINUS 1 DEGREE
ALL MACHINED SURFACES TO HAVE A SURFACE FINISH OF 125 MICROINCHES UNLESS OTHERWISE SPECIFIED

WELDING SPECIFICATION
UNLESS OTHERWISE SPECIFIED ALL WELDS SHOULD ADHERE TO FAIRMONT TAMPER WELDING SPECIFICATION NO 101

WEIGHT LBS
3rd ANGLE PROJECTION
DO NOT SCALE
SHEET 1 CONT ON —

DESCRIPTION 124
TRACTION VALVE ASSY

DRAWN LES	DATE 08-14-96	MACHINE TYPE MKVI	
CHECKED DGV	DATE 08-21-96		
APP-ENG AML	DATE 08-21-96		
APP-MFG	DATE		
LAST ECR 117111.53	CHECKED HWJ DATE 11-Sep-00	ENG DWG NO C9095WAE	

Fairmont Tamper
2401 Edmund Road-Box 20
Cayce-West Columbia
South Carolina 29171-0020
(803) 822-9160

THIS DOCUMENT CONTAINS PROPRIETARY INFORMATION AND SUCH INFORMATION MAY NOT BE DISCLOSED TO OTHERS FOR ANY PURPOSE OR USED FOR MANUFACTURING PURPOSES WITHOUT THE WRITTEN PERMISSION OF FAIRMONT TAMPER

ENG.DWG.NO.
G2130WAB

REVISIONS							
NO	ER	DESCRIPTION	ZONE	DR	CK	APP	MF
1	8657.82	NEW RELEASE		LES	DGV	AML	
2	11843.1	PICTORAL CHANGE ITEMS 4 & 5		LES	HWJ	AML	
3	12102.16	DESC WAS D05 VALVE ASSY. IT-3 WAS L420150. QTY WAS 4. ADDED ITS-9 & 10. & UPDATED PICTORAL.		PJG	DGV	AML	

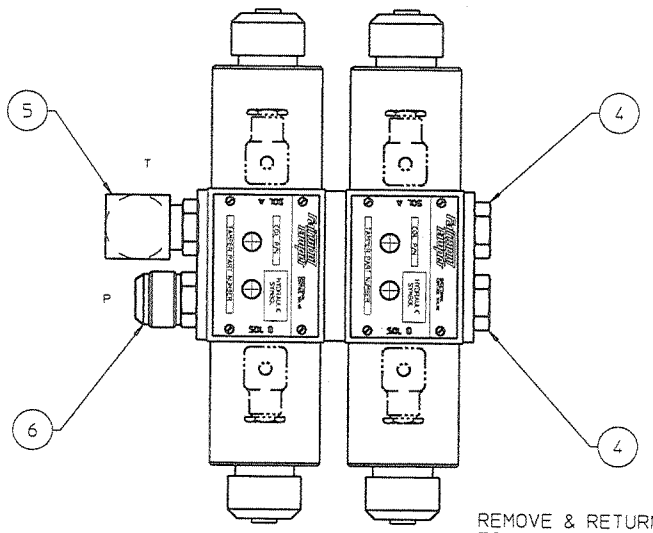

	ITEM	PART NUMBER	DESCRIPTION	QTY	
	10	D2093Y01	REWORK ADAPTER (1/2 ORB - 1/2 FNPT)	2	
	9	L411383	3/4 JIC X 1/2 MP ADAPTER	2	
	8	A0041058	1/4-20 UNC X 1 3/4 LONG SHCS	4	
	7	A0061027	1/4 HIGH COLLAR LOCKWASHER	4	
	6	L424351	-12 ORB X -16 JIC STR ADAPTER	1	
	5	L424285	-12 ORB X -16 JIC X 90° ELBOW	1	
	4	L424675	-12 ORB PLUG	2	
	3	L424556	1/2 O-RING BOSS - 37° FLARE	2	
	2	0-3333037-0-09	DIR CONTROL VALVE (D05)	2	
	1	A0757Y05	BAR MANIFOLD (2 STATION) D05	1	

REMOVE & RETURN ELECTRICAL CONNECTORS
TO STORES UNDER P/N 0-3230020-0-01

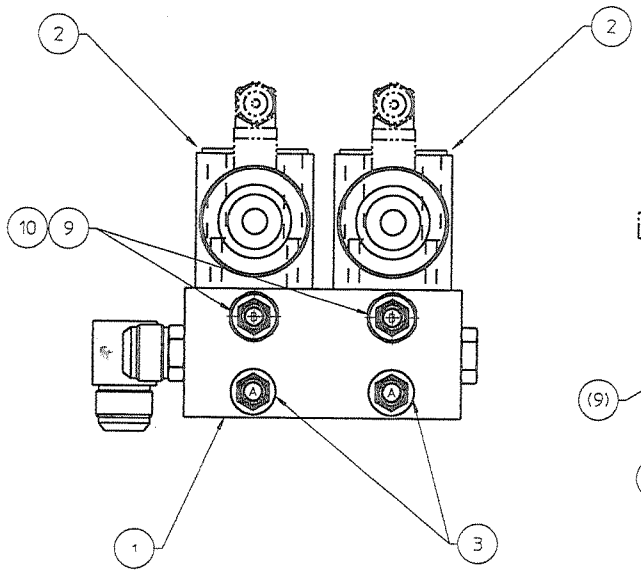

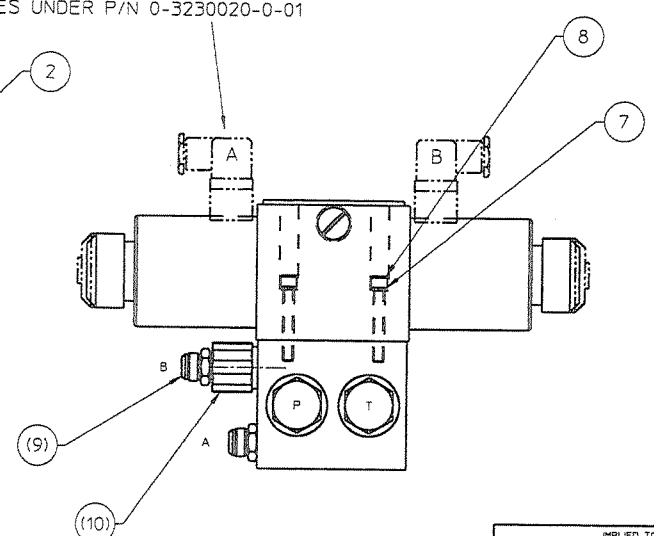

FIG NO.	ITEM NO.	PART NUMBER	DESCRIPTION AND MATERIAL SIZE (REF.ONLY)	QTY

IMPLIED TOLERANCES
ALL DIMENSIONS ARE IN INCHES-TOLERANCE UNLESS OTHERWISE SPECIFIED

NOMINAL SIZE RANGE		PLUS OR MINUS			NOMINAL SIZE RANGE		PLUS OR MINUS		
OVER	TO	FRACTION	2 PLACE DECIMAL	3 PLACE DECIMAL	OVER	TO	FRACTION	2 PLACE DECIMAL	3 PLACE DECIMAL
-	1	1/64	.01	.003	6	24	3/64	.03	.008
1	6	1/32	.02	.005	24	-	1/16	.05	.010

ANGULAR DIMENSIONS PLUS OR MINUS 1 DEGREE

ALL MACHINED SURFACES TO HAVE A SURFACE FINISH OF 125 MICRONCHES UNLESS OTHERWISE SPECIFIED

WELDING SPECIFICATION

UNLESS OTHERWISE SPECIFIED ALL WELDS SHOULD ADHERE TO FAIRMONT TAMPER WELDING SPECIFICATION NO. 101

WEIGHT LBS

3rd ANGLE PROJECTION

DO NOT SCALE

SHEET 1 CONT. — ON —

DESCRIPTION (2)
SQUEEZE VALVE ASSY

DRAWN LES	DATE 02/03/97	MACHINE TYPE MARK VI
CHECKED DGV	DATE 05/05/97	
APPROVED AML	DATE 04/26/97	Fairmont Tamper
APPROVED	DATE	2401 Edwards Road-Box 20 Cayce-West Columbia, South Carolina 29171-0020 (803) 822-9760
LAST ECR 12102 16	CHECKED dvgn DATE 11-Aug-00	DRAWING G2130WAB

THIS DOCUMENT CONTAINS PROPRIETARY INFORMATION AND SUCH INFORMATION MAY NOT BE DISCLOSED TO OTHERS FOR ANY PURPOSE OR USED FOR MANUFACTURING PURPOSES WITHOUT THE WRITTEN PERMISSION OF FAIRMONT TAMPER

ENG.DWG.NO
G0686XAE

REVISIONS							
NO	ER	DESCRIPTION	ZONE	DR	CK	APP	MF
A	13116 .37	NEW RELEASE		PJG			

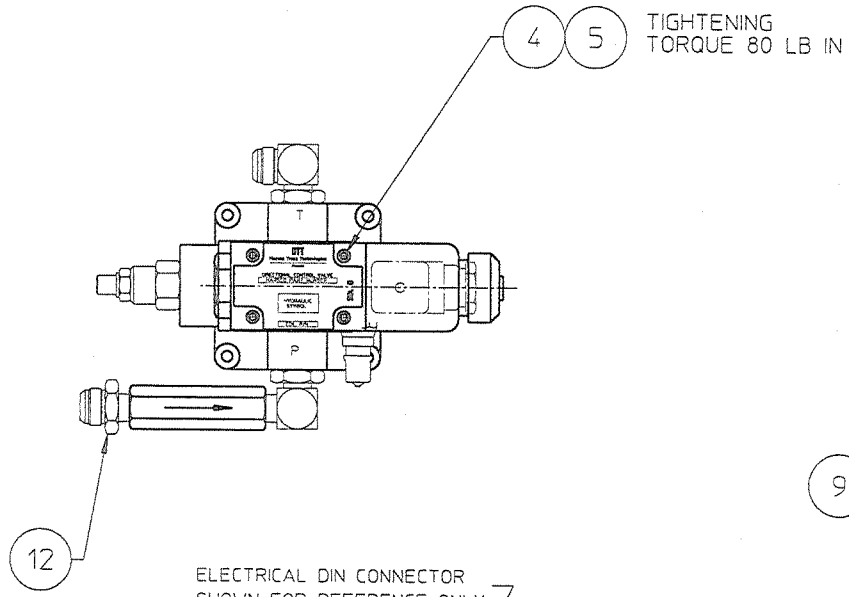

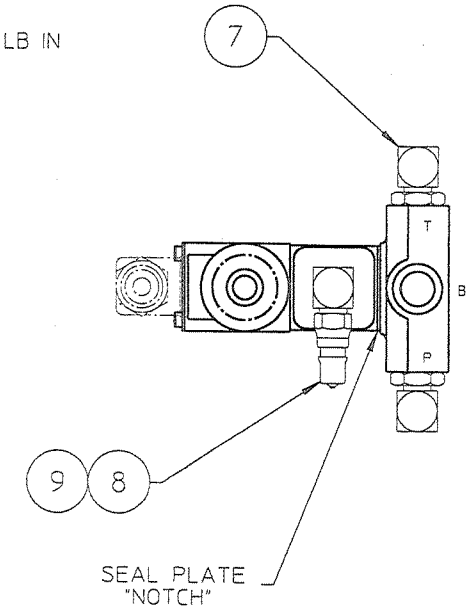

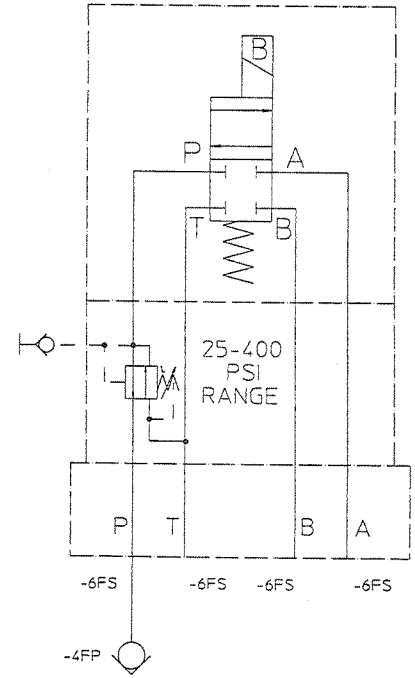

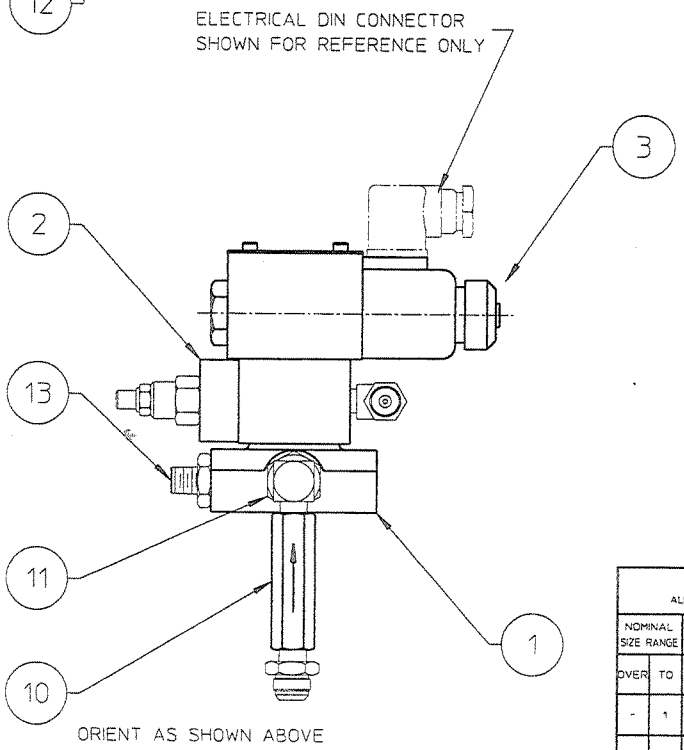

FIG NO.	ITEM NO.	PART NUMBER	DESCRIPTION AND MATERIAL SIZE (REF.ONLY)	QTY
	13	G5787Y04	1/4 NPT X 3/8 JIC STRAIGHT	1
	12	0-3304013-0-40	1/4 NPT X 3/8 JIC STRAIGHT	1
	11	G4911Y02	3/8 O-RING BOSS X 1/4 NPT X 90°	1
	10	L41208	CHECK VALVE (1/4 NPT)	1
	9	L41228	1/4 FP QUICK DISCONNECT 1/4 NPT	1
	8	L420087	ADAPTER 1/4 MP-MP 90°	1
	7	L411939	3/8 O-RING BOSS - JIC 90°	1
	6	BLANK		
	5	A0041029	#10-24 SOC HD CAP SCR X 3 3/4	4
	4	A0061025	#10 HIGH COLLAR LOCK WASHER	4
	3	C0993Y19	D03 SOL OP DIR VALVE	1
	2	C0613Y08	REDUCING & RELIEF SWCH (D03)	1
	1	0-3361006-0-03	SUBPLATE D03	1

IMPLIED TOLERANCES
ALL DIMENSIONS ARE IN INCHES-TOLERANCE UNLESS OTHERWISE SPECIFIED

NOMINAL SIZE RANGE		PLUS OR MINUS			NOMINAL SIZE RANGE		PLUS OR MINUS		
OVER	TO	FRACTION	2 PLACE DECIMAL	3 PLACE DECIMAL	OVER	TO	FRACTION	2 PLACE DECIMAL	3 PLACE DECIMAL
-	1	1/64	.01	.003	6	24	3/64	.03	.008
1	6	1/32	.02	.005	24	-	1/16	.05	.010

ANGULAR DIMENSIONS PLUS OR MINUS 1 DEGREE

√ ALL MACHINED SURFACES TO HAVE A SURFACE FINISH OF 125 MICROINCHES UNLESS OTHERWISE SPECIFIED

WELDING SPECIFICATION

UNLESS OTHERWISE SPECIFIED ALL WELDS SHOULD ADHERE TO FAIRMONT TAMPER WELDING SPECIFICATION NO. 101

WEIGHT lbs.

3rd ANGLE PROJECTION

DO NOT SCALE

SHEET 1 CONT ON --

DESCRIPTION (24)
TRAC DISC ALIGN VLV ASSY

DRAWN PJG	DATE 7/19/05	MACHINE TYPE MARK VI
CHECKED JOC	DATE 7/25/05	
APP-ENG JOC	DATE 7/25/05	
APP-MFG	DATE	
LAST ECR 13116 .37	CHECKED dvon	ENG.DWG.NO. G0686XAE
	DATE 1-Aug-05	

Fairmont Tamper
2401 Edmund Road-Box 20
Cayce-West Columbia,
South Carolina 29171-0020
(803) 822-9160

THIS DOCUMENT CONTAINS PROPRIETARY INFORMATION AND SUCH INFORMATION MAY NOT BE DISCLOSED TO OTHERS FOR ANY PURPOSE OR USED FOR MANUFACTURING PURPOSES WITHOUT THE WRITTEN PERMISSION OF FAIRMONT TAMPER.

ENG.DWG.NO.
C7417XAA

REVISIONS							
NO	ER	DESCRIPTION	ZONE	DR	CK	APP	MF
1	5860 .31	NEW RELEASE					
2	6711 .8	ADDED ITEMS 8-10; IT-2 WAS A1299Y02; IT-7 WAS L420969; QTY IT-5 WAS 1; QTY IT-4 WAS 4; PICTORIAL CHANGES.		HAP	DGV	AML	
3		ADDED 1/4 x 1/2 CHAMFER		HAP		AML	

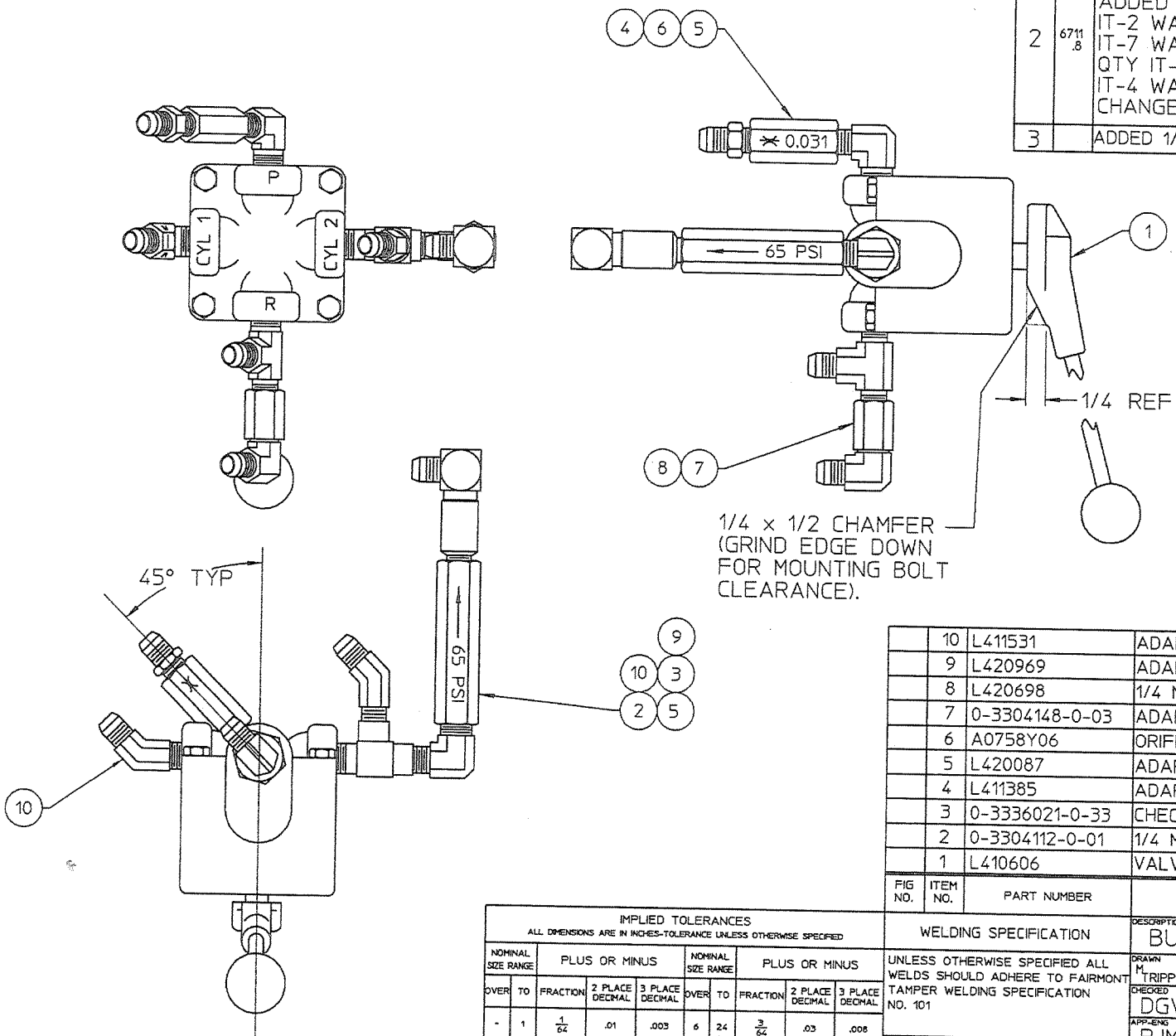

FIG NO.	ITEM NO.	PART NUMBER	DESCRIPTION AND MATERIAL SIZE (REF.ONLY)	QTY
	10	L411531	ADAPTER 1/4 MP-JIC 45°	2
	9	L420969	ADAPTER 1/4 MP-JIC 90°	1
	8	L420698	1/4 MP-JIC-JIC TEE	1
	7	0-3304148-0-03	ADAPTER 1/4 SWIVEL JIC-JIC 90°	1
	6	A0758Y06	ORIFICE FITTING 0.031	1
	5	L420087	ADAPTER 1/4 MP-MP 90°	2
	4	L411385	ADAPTER 1/4 MP-JIC STR	1
	3	0-3336021-0-33	CHECK VALVE 1/4 FP	1
	2	0-3304112-0-01	1/4 MP-FP-FP TEE	1
	1	L410606	VALVE, 4-WAY HYDR.	1

IMPLIED TOLERANCES
ALL DIMENSIONS ARE IN INCHES-TOLERANCE UNLESS OTHERWISE SPECIFIED

NOMINAL SIZE RANGE		PLUS OR MINUS			NOMINAL SIZE RANGE		PLUS OR MINUS		
OVER	TO	FRACTION	2 PLACE DECIMAL	3 PLACE DECIMAL	OVER	TO	FRACTION	2 PLACE DECIMAL	3 PLACE DECIMAL
-	1	1/64	.01	.003	6	24	3/64	.03	.008
1	6	1/32	.02	.005	24	-	1/16	.05	.010

ANGULAR DIMENSIONS PLUS OR MINUS 1 DEGREE
ALL MACHINED SURFACES TO HAVE A SURFACE FINISH OF 125 MICROINCHES UNLESS OTHERWISE SPECIFIED.

WELDING SPECIFICATION
UNLESS OTHERWISE SPECIFIED ALL WELDS SHOULD ADHERE TO FAIRMONT TAMPER WELDING SPECIFICATION NO. 101

WEIGHT lbs.
3rd ANGLE PROJECTION
DO NOT SCALE
SHEET 1 OF 1 CONT. ON —

DESCRIPTION (24) BUGGY LIFT VALVE ASSY

DRAWN M TRIPPE	DATE 3/3/92	MACHINE TYPE MARK IV	
CHECKED DGV	DATE 3/12/92		
APP-ENG RJM	DATE 3/12/92		
APP-MFG	DATE		
LAST ECR. 6711.11	CHECKED jgo	ENG.DWG.NO. C7417XAA	
	DATE 15-Feb-94		

Fairmont Tamper™ 2401 Edmund Road-Box 20 Cayce-West Columbia, South Carolina 29171-0020 (803) 822-9160

THIS DOCUMENT CONTAINS PROPRIETARY INFORMATION AND SUCH INFORMATION MAY NOT BE DISCLOSED TO OTHERS FOR ANY PURPOSE OR USED FOR MANUFACTURING PURPOSES WITHOUT THE WRITTEN PERMISSION OF FAIRMONT TAMPER.

ENG.DWG.NO
C9090XAA

REVISIONS							
NO	ER	DESCRIPTION	ZONE	DR	CK	APP	MF
1	5860.213	NEW RELEASE, REPLACES C7609XAA		MLT	DGV	APD	
2	6713.1	ITEM 1 P/N WAS 0-3361006-0-03		CJW	DGV	APD	
3	6961.1	ITEM 1 WAS 0-3361006-0-07	P/L	JRF			
4	8460.1	ITEM 2 P/N WAS 0-3334026-0-04 ITEM 5 P/N WAS A0041028 ITEM 10 DELETED	P/L P/L PICT	LES	DGV	AML	
5	10554.7	REVISED PICTORALLY		LES	HWJ	AML	

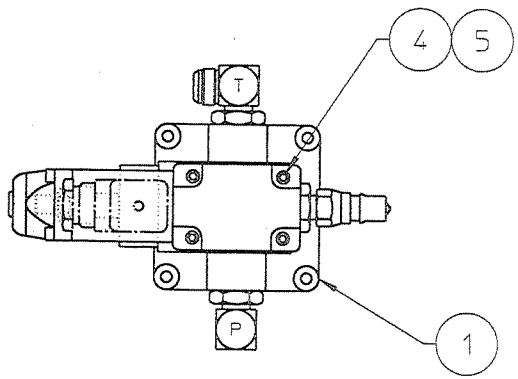

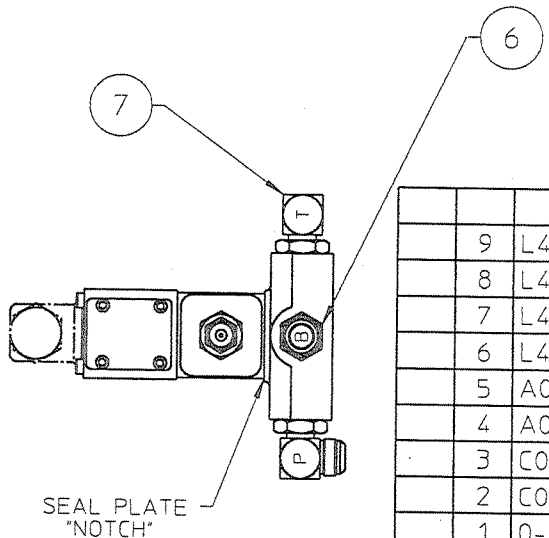

ITEM	PART NUMBER	DESCRIPTION	QTY
9	L41228	1/4 FP QUICK DISCONNECT 1/4 NPT	1
8	L41079	ADAPTER 1/4 MP-MP	1
7	L411939	3/8 O-RING BOSS - JIC 90°	2
6	L421708	3/8 O-RING BOSS-1/4 JIC STR	2
5	A0041029	#10-24 SOC HD CAP SCR X 3 3/4	4
4	A0061025	#10 HIGH COLLAR LOCK WASHER	4
3	C0993Y02	(D03) HYD VALVE 2 POS 4-WAY	1
2	C0613Y07	PRESS REDUCE/RELIEF SWCH D03	1
1	0-3361006-0-03	SUBPLATE D03	1

ELECTRICAL (DIN) CONNECTOR
IS SHOWN FOR REFERENCE ONLY
IF PRESENT, REMOVE & RETURN
TO STORES UNDER P/N 0-3230020-0-01

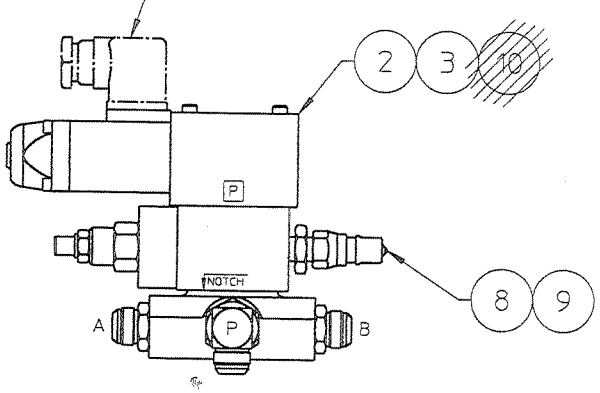

SCHEMATIC SYMBOL

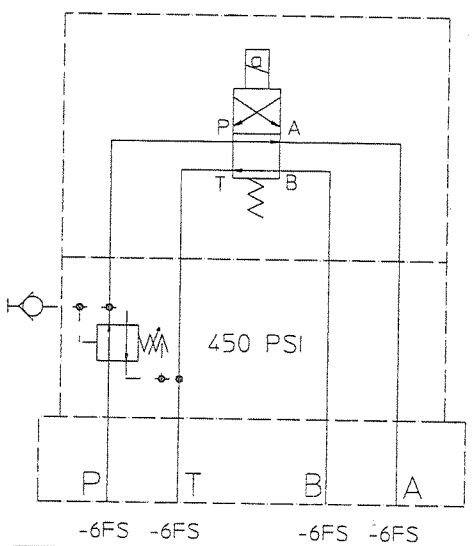

FIG NO	ITEM NO.	PART NUMBER	DESCRIPTION AND MATERIAL SIZE (REF.ONLY)	QTY

IMPLIED TOLERANCES
ALL DIMENSIONS ARE IN INCHES-TOLERANCE UNLESS OTHERWISE SPECIFIED

NOMINAL SIZE RANGE		PLUS OR MINUS			NOMINAL SIZE RANGE		PLUS OR MINUS		
OVER	TO	FRACTION	2 PLACE DECIMAL	3 PLACE DECIMAL	OVER	TO	FRACTION	2 PLACE DECIMAL	3 PLACE DECIMAL
-	1	1/64	.01	.003	6	24	3/64	.03	.008
1	6	1/32	.02	.005	24	-	1/16	.05	.010

ANGULAR DIMENSIONS PLUS OR MINUS 1 DEGREE
ALL MACHINED SURFACES TO HAVE A SURFACE FINISH OF 125 MICROINCHES UNLESS OTHERWISE SPECIFIED.

WELDING SPECIFICATION

UNLESS OTHERWISE SPECIFIED ALL WELDS SHOULD ADHERE TO FAIRMONT TAMPER WELDING SPECIFICATION NO. 101

WEIGHT lbs.

3rd ANGLE PROJECTION

DO NOT SCALE

SHEET 1 CONT. ON —

DESCRIPTION (24)
AXLE LOCKOUT VALVE ASSY

DRAWN TRIPPE	DATE 11/9/92	MACHINE TYPE MARK IV
CHECKED DGV	DATE 11-20-92	
APP-ENG TD	DATE 11-20-92	
APP-MFG	DATE	
LAST ECR 10554 7	CHECKED hwj	ENG.DWG.NO. C9090XAA
	DATE 9-Mar-20	

Fairmont Tamper
2401 Edmund Road-Box 20
Cayce-West Columbia,
South Carolina 29171-0020
(803) 822-9160

THIS DOCUMENT CONTAINS PROPRIETARY INFORMATION AND SUCH INFORMATION MAY NOT BE DISCLOSED TO OTHERS FOR ANY PURPOSE OR USED FOR MANUFACTURING PURPOSES WITHOUT THE WRITTEN PERMISSION OF FAIRMONT TAMPER.

C9102WAA

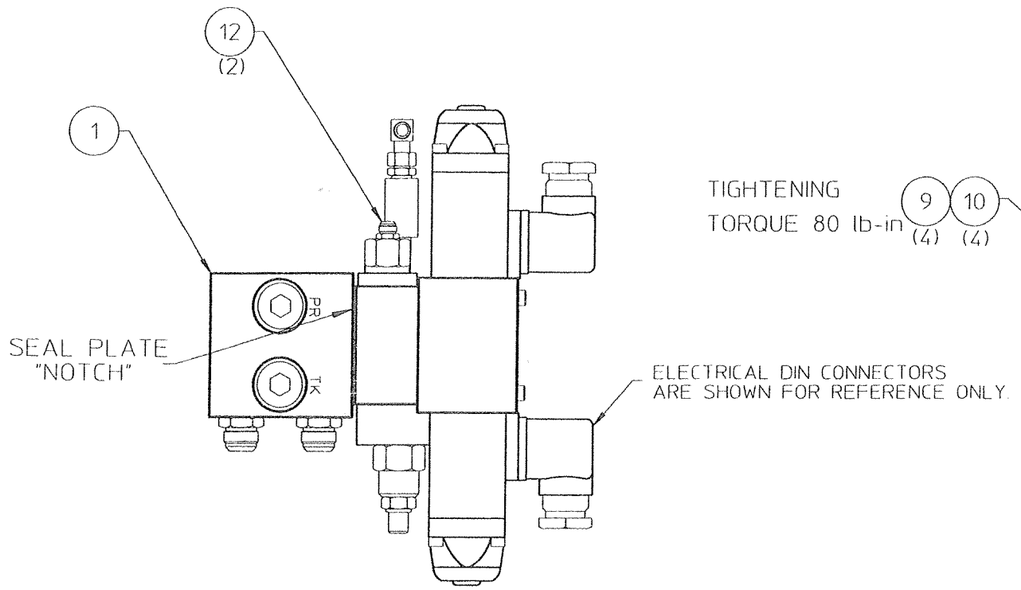

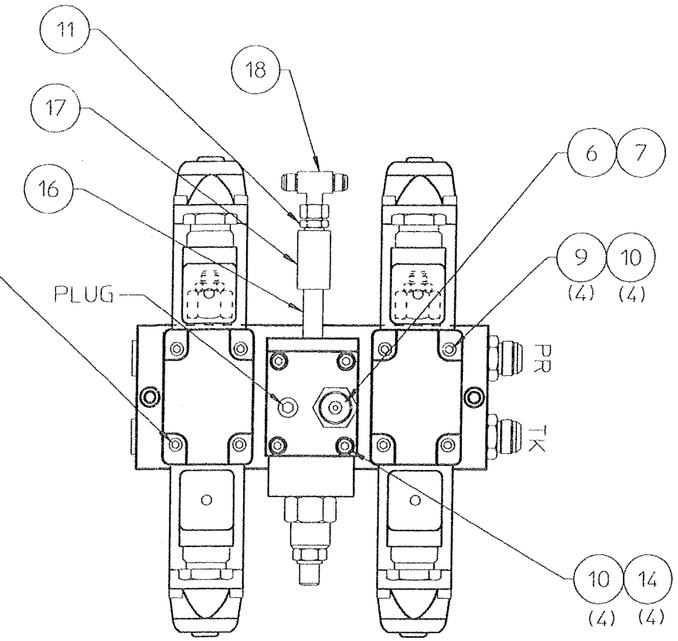

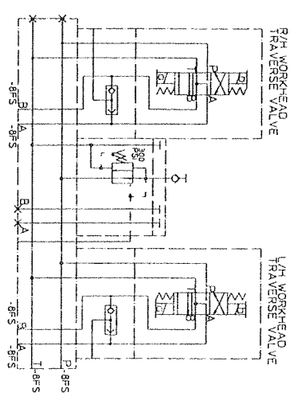

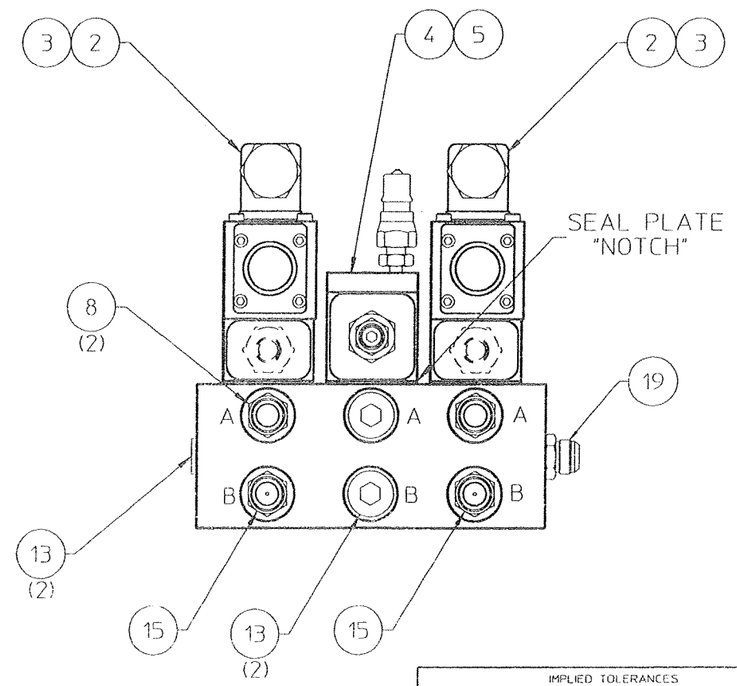

REVISIONS

NO	ER	DESCRIPTION	ZONE	DR	CK	APP	MF
1	5860 225	NEW RELEASE. REPLACES C7369WAA					
2	6360 1	ADDED ITEMS 16 - 18		CJW	DGV	APD	
	6713 1	IT 1 WAS 0-3364012-0-02					
3	6713 2	IT 1 WAS 0-3364012-0-10		LES	DGV		
4	6447 37	IT 15 WAS 0-3304175-0-01		LES	DGV		
5	6447 46	IT 15 WAS 0-3304175-0-02	P/L	JRF			
6	7165	IT 8 QTY WAS 4. ADDED IT 19. 4 OCT 94		AO			

FIG NO	ITEM NO	PART NUMBER	DESCRIPTION AND MATERIAL SIZE (REF ONLY)	QTY
	19	L424556	ADAPTER 1/2 O-RING-3/4 JIC ST	2
	18	0-3304057-0-09	SW BR TEE, -8 JIC-JIC-JIC SW	1
	17	L41251	COUPLING, 1/4 FP-FP	1
	16	L41079	NIPPLE, 1/4 MP-MP	1
	15	0-3304175-0-11	ORIFICE FITTING -8-JIC-O-RING	2
	14	A0041194	SOC HD CAP SCR 10-24X2 1/4	4
	13	0-3304203-0-04	SOC HD O-RING PLUG 1/2	4
	12	0-3304028-0-36	ADAPTER 1/4 O-RING - 1/2 JIC	2
	11	L411381	ADAPTER 1/4 MP- 1/2 JIC STR	1
	10	A0061025	#10 HIGH COLLAR LOCK WASHER	12
	9	A0041195	SOC HD CAP SCR 10-24X3 1/4	8
	8	L420150	ADAPTER 1/2 O-RING-JIC STR	2
	7	L41228	QUICK DISCONNECT 1/4 FP	1
	6	L423299	ADAPTER 1/4 MP-1/8MP	1
	5	0-3360011-0-06	MANIFOLD BLANKING PLT	1
	4	C0613Y01	REDUCING/RELIEVING SANDWICH	1
	3	C0674Y01	D03 LOAD SENSING SANDWICH	2
	2	C0993Y03	(D03) HYD VALVE 3 POS,4-WAY	2
	1	0-3364012-0-02	MANIFOLD, D01, 3 STATION	1

IMPLIED TOLERANCES
ALL DIMENSIONS ARE IN INCHES TOLERANCE UNLESS OTHERWISE SPECIFIED

NOMINAL SIZE RANGE		PLUS OR MINUS			NOMINAL SIZE RANGE		PLUS OR MINUS		
OVER	TO	FRACTION	2 PLACE DECIMAL	3 PLACE DECIMAL	OVER	TO	FRACTION	2 PLACE DECIMAL	3 PLACE DECIMAL
-	1	1/64	01	003	6	24	3/64	03	008
1	6	1/32	02	005	24	-	1/16	05	010

ANGULAR DIMENSIONS PLUS OR MINUS 1 DEGREE

ALL MACHINED SURFACES TO HAVE A SURFACE FINISH OF 125 MICROINCHES UNLESS OTHERWISE SPECIFIED

WELDING SPECIFICATION

UNLESS OTHERWISE SPECIFIED ALL WELDS SHOULD ADHERE TO FAIRMONT TAMPER WELDING SPECIFICATION NO 101

WEIGHT lbs

3rd ANGLE PROJECTION

DO NOT SCALE

SHEET 1 CONT ON —

DESCRIPTION 124: W/H TRAVERSE VALVE ASSY

DRAWN M TRIPPE	DATE 11/9/92	MACHINE TYPE MARK IV	
CHECKED DGV	DATE 12-2-92		
APP-ENG TD	DATE 12-1-92		
APP-MFG	DATE		
LAST ECR 7165	CHECKED DWGT	ENGDWG NO C9102WAA	
1	DATE 12-Oct-94		

Fairmont Tamper™ 2401 Edmund Road-Box 20 Cayce-West Columbia South Carolina 29171-0020 (803) 822-9160

THIS DOCUMENT CONTAINS PROPRIETARY INFORMATION AND SUCH INFORMATION MAY NOT BE DISCLOSED TO OTHERS FOR ANY PURPOSE OR USED FOR MANUFACTURING PURPOSES WITHOUT THE WRITTEN PERMISSION OF FAIRMONT TAMPER

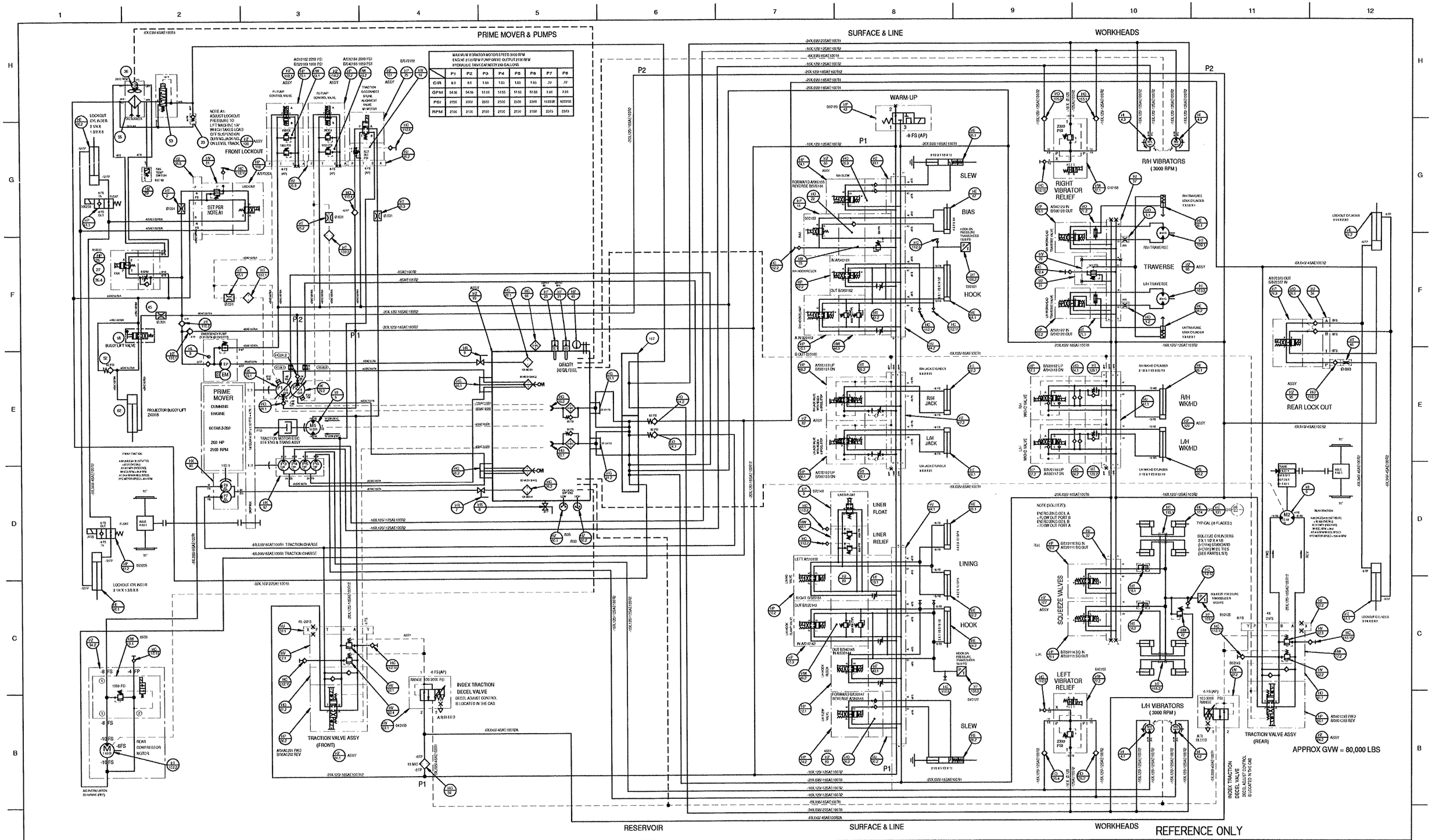

CONFIDENTIAL

© COPYRIGHT 2001 HARSCO TRACK TECHNOLOGIES. THIS DRAWING OR DOCUMENT IS THE PROPERTY OF HARSCO TRACK TECHNOLOGIES AND EMBODIES CONFIDENTIAL INFORMATION, TRADE SECRET INFORMATION, AND/OR KNOW-HOW THAT IS THE PROPERTY OF HARSCO TRACK TECHNOLOGIES. BY ACCEPTING THIS DRAWING OR DOCUMENT, THE RECIPIENT AGREES (1) NOT TO PROVIDE, OR OTHERWISE MAKE AVAILABLE, THE DRAWING OR DOCUMENT, OR ANY INFORMATION OR KNOW-HOW EMBODIED THEREIN, TO ANY THIRD PARTY AND (2) NOT TO REPRODUCE OR USE THE DRAWING OR DOCUMENT TO MANUFACTURE ANY APPARATUS OR DEVICE, WITHOUT THE PRIOR WRITTEN AUTHORIZATION OF HARSCO TRACK TECHNOLOGIES.

SOLID EDGE DRAWING

IMPLIED TOLERANCES

ALL DIMENSIONS ARE IN INCHES - TOLERANCE UNLESS OTHERWISE SPECIFIED

INCH				METRIC			
DRAWING DIM RANGE		PLUS OR MINUS		DRAWING DIM RANGE		PLUS OR MINUS	
OVER	TO	±FRACT	±DECIMAL	OVER	TO	±FRACT	±DECIMAL
0	6	.03	.005	0	150	.8	.13
6	24	.04	.008	150	600	1.6	.20
24	-	.06	.016	-	600	1.6	.25

UNLESS OTHERWISE SPECIFIED ALL MACHINED SURFACE WILL HAVE A SURFACE FINISH OF 125 MICROINCHES AVERAGE OR A 63" CONCENTRICITY WITHIN 010

THIRD ANGLE PROJECTION

UNLESS OTHERWISE SPECIFIED ALL WELDS SHOULD MEET TO THE LATEST HTT WELD INSPECTION CRITERIA

CHANGE	R/L	REVISION	DATE
101063	A	RELEASE	
101127	B	PLUMBING CHANGE	8.14.07

Description: HYDRAULIC SCHEMATIC

Drawing Number: 4014003

Model:

Weight: Scale: 1:4

Mass:

Machine Type: MKVI

Drawn: badler 6.6.07

APVD Dwg: BPA APVD Eng: JBR

Part Number: 4014003 Size: D Sheet: 1 of 2

HTT Harsco Track Technologies
Harsco
Columbia, SC

Plotted by badler on 8/13/2007 4014003.dft

ITEM NO	PART NUMBER	DESCRIPTION	Machine Function
1	0-3304175-0-11	ORIFICE FITTING (.093)	Traverse Lock
2	0-3304175-0-12	ORIFICE FITTING (.093)	Lockout Front
3	0-3316003-0-04	EMERGENCY PUMP (24 VDC)	Emergency Pump
4	0-3321014-0-04	HYDRAULIC MOTOR (1.29 CI)	Vibrators
5	0-3321018-0-10	HYDRAULIC MOTOR (15 CI)	Traction Motor (Front)
6	C8649Y02	HYDRAULIC MOTOR (11 CI)	Traction Motor (Rear)
7	0-3330011-0-02	BALL VALVE (1 1/2 NPT)	P7/P8
8	0-3330011-0-07	BALL VALVE (1/2 NPT)	Emerency Pump Suct
9	0-3333037-0-08	DO5 SOL OP DIR VALVE	Liner Float
10	0-3333037-0-09	DO5 SOL OP DIR VALVE	Hooks
11	0-3333037-0-10	DO5 SOL OP DIR VALVE	Bias/Lining
12	0-3333037-0-18	DO5 SOL OP DIR VALVE	Hooks Regen
13	0-3334065-0-05	SOL OPER RELIEF VALVE	Air Conditioner
14	L425375	CHECK VALVE (1 1/2 NPT)	Return
15	0-3334013-0-05	PR RED VALVE SANDWICH	Bias
16	C0613Y08	PR RED VALVE SANDWICH	Traction Disconnect
17	0-3334057-0-07	DUAL RELIEF ASSY	Traction Front & Rear
18	L410606	ROTARY CONTROL	BUGGY LIFT
19	0-3335024-0-11	PC FLOW REGULATOR	Liner & Hooks
20	A1556Y08	TEMP SWITCH 70 °(1/2 NPT)	Hydraulic Tank
21	A1556Y09	TEMP SWITCH 180 °(1/2 NPT)	Hydraulic Tank
22	0-3336003-0-02	PO CHECK SANDWICH	Bias
23	0-3336021-0-23	IN-LINE CHECk (65 PSI)	Oil Cooler
24	0-3336021-0-18	IN-LINE CHECK (3 PSI)	P1 & P2
25	C0993Y07	DIR VALVE 2 POS DO3	OIL COOLER
26	0-3336024-0-07	PO CHECK SANDWICH	Slew, Rear Lockout
27	0-3335031-0-15	FLOW CONTROL D03	Oil Cooler
28	0-3351002-0-03	SUCTION STRAINER	Emergency Pump
29	A1556Y21	TEMP SWITCH	Oil Cooler
30	0-3360011-0-03	DO3/DO5 ADATER PLATE	Slew
31	0-3360011-0-06	DO3 COVER PLATE	Traverse
32	0-3360012-0-01	D05 SUBPLATE (2 STAT)	Squeeze Workheads
33	0-3361004-0-05	DO8 SUBPLATE	Traction Front & Rear
34	0-3361006-0-01	SUBPLATE (D03)	Rear Lockout
35	0-3361006-0-03	SUBPLATE (D03)	P1, P2, FRONT LOCKOUT, TRAC DISC & OIL COOLER
36	C7376Y04	HYD GEAR MOTOR	Oil Cooler Fan Motor
37	0-3364012-0-02	MANIFOLD D03 (3 STAT)	Traverse
38	0-3372001-0-01	HYD CYL (TRAVERSE)	Traverse Lock
39	0-3380000-0-05	FLOW DIFFUSER	Hydraulic Tank
40	0-3381006-0-01	SIGHT GAGE W/TEMP GA	Hydraulic Tank
41	A0729Y06	SOL OP DIR VALVE	Front L/O
42	A0730Y04	IN-LINE SOL OP VALVE	Warm Up
43	H2247Y01	DUAL FLOW REG ASSY	Hooks & Clamps
44	A0757Y04	MANIFOLD D05 (4 STAT)	Hook Manifolds R & L
45	A0758Y06	ORIFICE FITTING (.031)	P1, P2 & Traction Disc.
46	A0758Y13	ORIFICE FITTING (.093)	Lockout Rear
47	A0963Y01	MANIFOLD D08 (2 STAT)	Jacks
48	A1070Y19	DUAL RELIEF SANDWICH	Hooks
49	A1070Y16	DUAL RELIEF SANDWICH	P1 & P2 Pump Control
50	0-3106003-0-03	LEVEL SENSOR	Hydraulic Tank Level
51	C0613Y07	PRESS/RED/REL VALVE SAND	Front Lockout
52	0-3336021-0-33	CHECK 65 PSI 1/4 NPT	Buggy lift
53	4001118	THERMAL BYPASS VALVE	Oil Cooler
54	A2803Y01	CHECK VALVE (D08)	Workheads
55	4001051	OIL COOLER	Oil Cooler
56	A4490Y03	SOL OP DIR VALVE (D08)	Traction Front & Rear
57	A4490Y08	SOL OP DIR VALVE (D08)	Workheads (Rexroth)
58	A4490Y07	SOL OP DIR VALVE (D08)	Jacks
59	A5748Y01	IN LINE FILTER	Traction Pilot Circuit
60	B5704XAB	HYD CYL (FRONT LOCKOUT)	Lockout Front
61	A7808Y01	HYD CYL (REAR LOCKOUT)	Lockout Rear
62	G7733YAA	CYL W/ROD ENDS 2X1X18	Projector Buggy Lift System
63	B5705XAF	HYD CYL (LINING)	Lining
64	B5708XAA	HYD CYL (HOOKS)	Hooks
65	B5761XAA	HYD CYL (WK/HD)	Workheads
66	B5715XAE	HYD CYL (6" WITH L/U)	Jacks

ITEM NO	PART NUMBER	DESCRIPTION	Machine Function
67	B5705XAB	HYD CYLINDER (BIAS)	Bias
68	B7036WAC	HYD CYLINDER (SLEW)	Slew
69	B9529Y01	PC FLOW REGULATOR	Jacks
70	C0613Y01	RED&REL VALVE SANDWICH	Traverse
71	C0674Y01	DO3 SHUTTLE CK SANDWICH	Wk/Hd Traverse
72	0-3334049-0-12	RELIEF VALVE	Squeeze-In Relief
73	C0993Y01	DO3 SOL OP DIR VALVE	Pump P1 & P2
74	C0993Y03	DO3 SOL OP DIR VALVE	Slew, Rear Lockout
75	C0993Y19	DO3 SOL OP DIR VALVE	Traction Disc
76	C0993Y03	DO3 SOL OP DIR VALVE	Traverse (Rexroth)
77	C1140Y04	RELIEF VALVE SOL OP	Vibrators
78	0-3333037-0-09	DO5 SOL OP DIR VALVE	Squeeze (Rexroth)
79	D4346Y03	PCVV HYD PUMP (THRU)	Pump P1 & P2 (Rexroth)
80	C3759W02	DO5 SANDWICH ADAPTER	Liner
81	C8214YAA	DUAL CHECK SANDWICH (DO8)	Tractiion Front & Rear
82	C9087VAB	VALVE ASSY (JACKS)	Jacks
83	BLANK		
84	C9095WAE	VALVE ASSY (TRACTION)	Traction
85	C9102WAA	VALVE ASSY (TRAVERSE)	Wk/Hd Traverse (Rexroth)
86	C9112VAD	BIAS & CLAMP VALVE ASSY	
87	BLANK		
88	BLANK		
89	C9104VAC	LINER & CLAMP VALVE ASSY	
90	D4176Y01	SUCTION STRAINER	Hydraulic Tank
91	D4376Y01	RETURN FILTER (5 MIC)	Hydraulic Tank
92	D8276Y01	RED & REL CARTRIDGE	Traction Front & Rear
93	D8305Y01	SOL OP PROP RED VALVE	Traction Front & Rear
94	D3184WAE	AIR CONDITIONER KIT	Air Conditioner
95	(REF)	VALVE ASSY (REAR L/O)	Items 26,34,46,74,110
96	D4313Y14	DOUBLE PUMP P7 & P8	Pumps P7 & P8
97	G0578Y01	QUAD GEAR PUMP	Pump P3,P4,P5,P6
98	G0641Y01	FILTER/BREATHER	Hydraulic Tank
99	G0651WAA	HYD TANK ASSY	Hydraulic Tank
100	C9090XAA	VALVE ASSY (FRONT L/O)	Front Lockout
101	G0686XAE	TRAC DISC ALIGN VLV	Traction Disconnect
102	D6020Y04	HYDRAULIC MOTOR (1.03 CI)	Air Conditioner
103	L40316	FILTER/SNUBBER	Vent P1 & P2
104	BLANK		
105	L40549	CHECK VALVE (3/4 NPT)	Vibrator Reliefs
106	4008374	TRANSDUCER	Squeeze & Hooks
107	L40701	GAGE SNUBBER	Hooks
108	BLANK		
109	L411545	HYDRAULIC MOTOR	Traverse
110	L41208	CHECK VALVE (1/4 NPT)	EP, L/O
111	L41209	CHECK VALVE (3/8 NPT)	Traction Pilot Circuit
112	L41228	MALE DISCONNECT	All
113	BLANK		
114	X68297	SQUEEZE CYLINDER (STD)	11 5/8" c - c (Closed)
115	Y766772Y	MANIFOLD (SQUEEZE)	Squeeze
116	C0993Y02	DO3 SOL OP DIR VALVE	Float & Lockouts
117	4010822	RETURN MANIFOLD	
118	C9094XAB	PUMP CONTROL VALVE (P1)	P1 & P2 Pump Control
119	BLANK		
120	BLANK		
121	BLANK		
122	BLANK		
123	BLANK		
124	BLANK		
125	BLANK		

ITEM NO	PART NUMBER	DESCRIPTION	Machine Function
126	G2139WAB	VALVE ASSY (WK/HD)	Workheads (Rexroth)
127	G2130WAB	VALVE ASSY (SQUEEZE)	Wk/Hd Squeeze (Rexroth)
128	BLANK		
129	B9529Y05	PC FLOW REGULATOR	Wk/Hd Upfeed Flow
130	BLANK		
131	X68297Z	SQUEEZE CYLINDER (WIDE)	12 1/8" c - c (Closed)
132	187901	ORIFICE FITTING (Ø.125)	P1 & P2 Case Flush

REFERENCE ONLY

CONFIDENTIAL
© COPYRIGHT 2001 HARSCO TRACK TECHNOLOGIES. THIS DRAWING OR DOCUMENT IS THE PROPERTY OF HARSCO TRACK TECHNOLOGIES AND EMBODIES CONFIDENTIAL INFORMATION, TRADE SECRET INFORMATION, AND/OR KNOW-HOW THAT IS THE PROPERTY OF HARSCO TRACK TECHNOLOGIES. BY ACCEPTING THIS DRAWING OR DOCUMENT, THE RECIPIENT AGREES (1) NOT TO PROVIDE, OR OTHERWISE MAKE AVAILABLE, THE DRAWING OR DOCUMENT, OR ANY INFORMATION OR KNOW-HOW EMBODIED THEREIN, TO ANY THIRD PARTY AND (2) NOT TO REPRODUCE OR USE THE DRAWING OR DOCUMENT TO MANUFACTURE ANY APPARATUS OR DEVICE, WITHOUT THE PRIOR WRITTEN AUTHORIZATION OF HARSCO TRACK TECHNOLOGIES.

SOLID EDGE DRAWING

IMPLIED TOLERANCES
ALL DIMENSIONS ARE IN INCHES - TOLERANCE UNLESS OTHERWISE SPECIFIED

NOMINAL DIA RANGE		INCH PLUS DIM	INCH MINUS	NOMINAL DIA RANGE		METRIC PLUS DIM	METRIC MINUS
OVER	TO	±FRACT ±DECIMAL	±FRACT ±DECIMAL	OVER	TO	±FRACT ±DECIMAL	±FRACT ±DECIMAL
0	6	.03	.025	0	150	.8	.13
6	24	.04	.008	150	600	1.0	.20
24	-	.06	.010	-	600	1.5	.25

UNLESS OTHERWISE SPECIFIED ALL MACHINED SURFACES WILL HAVE A SURFACE FINISH OF 125 MICROINCHES ANGULAR TOLERANCE OF ± 0.5° CONCENTRICITY WITHIN .010

THIRD ANGLE PROJECTION

UNLESS OTHERWISE SPECIFIED ALL WELDS SHOULD ADHERE TO THE LATEST HTT WELDING SPECIFICATION

CHANGE	R/L	REVISION	DATE
101063	A	RELEASE	
101127	B	ITEM 132 WAS A0758Y14	8.14.07

Description: HYDRAULIC SCHEMATIC
Drawing Number: MKVI
Machine Type:
Drawn: badler 6.6.07
Model:
Weight: Scale: 1:4
APVD Dsg: BPA APVD Chkg: JBR
Matl:

HTT
Harsco Track Technologies
Harsco
Columbia, SC

Part Number: 4014003
Size: D
Sheet: 2 of 2

Plotted by badler on 8/13/2007 4014003.dft

PARTS LIST

ASSEMBLY IDENTIFIER

ITEM NO	PART NUMBER	DESCRIPTION	QUANTITY
1	G0651WAA	HYD TANK ASSY	1
2	A2391YAB	90° HOSE STEM W/SAE FLG	3
3	G0682Y01	FLANGE REWORK	2
4	0-3304201-0-08	1 1/2 X 90° SPLIT FLG EL	4
5	0-3304171-0-06	BAND CLAMP T-BOLT	8
6	0-3305012-0-04	SUCTION HOSE 1 1/2"	10
7	0-3304142-0-05	1 1/2 S.F. MOUNTING KIT	4
8	0-3305012-0-06	SUCTION HOSE 2 1/2"	10
9	L425246	2 1/2 HD BAND CLAMP	8
10	C3538YAG	STR HOSE STEM W/SAE FLG	1
11	0-3304142-0-07	2 1/2 SPLIT FLG KIT	4
12	0-3304211-0-02	SW FLG / SP FLG 90°	1
13	A3808Y04	SAE FLG RING KIT	1
14	4010844	PLATE	2
15	G0663Y01	MOUNTING BRKT	2
16	A0061016	5/8 MED LOCK WASHER	4
17	G0663Y02	TOP MOUNTING BRKT	2
18	A0036185	5/8-11 X 3 3/4 HHCS	4
19	A0059035	3/4 HEAVY FLAT WASHER	4
20	A0036228	3/4-10 X 5 HHCS	4
21	0-3643007-0-02	SHOCK MOUNT	4
22	L40108	3/4-10 ESNA NUT	4
23	0-3305012-0-03	SUCTION HOSE 1 1/4"	8
24	L423105	1/2 MEDIUM PRESSURE HOSE	20
25	L411361	-8 JIC SW HOSE END	2
26	L425247	BAND CLAMP (1.72-1.91)	2
27	L422431	O RING	2
28	Z768731-001	UPPER SHOCK MOUNT	8
29	A0059017	5/8 HEAVY FLAT WASHER	4

REVISIONS

NO	ER	DESCRIPTION	DR	CK	APP	MF
A	100284	RELEASED	PJG			

MK VI IRAQ

ASSEMBLY DESCRIPTION

ER
DR
CK
APP
MF

Fairmont Tamper™
2401 Edmund Road-Box 20
Cayce-West Columbia,
South Carolina 29171-0020
(803) 822-9160

DWG NO 4010827
SHEET 1
CONT ON –
DESCRIPTION (24) HYD TANK INSTL
DRAWN PJG
DATE 02-06-06
CHECKED JOC
DATE 02-08-06
APP JOC
DATE 02-08-06
APP
DATE

SHEET 1
CONT ON –
LAST ECR. 10028
4
CHECKED
DATE
DWG NO 4010827

ENG DWG NO
4010827

REVISIONS							
NO	ER	DESCRIPTION	ZONE	DR	CK	APP	MF
A	100284	NEW RELEASE		PJG			

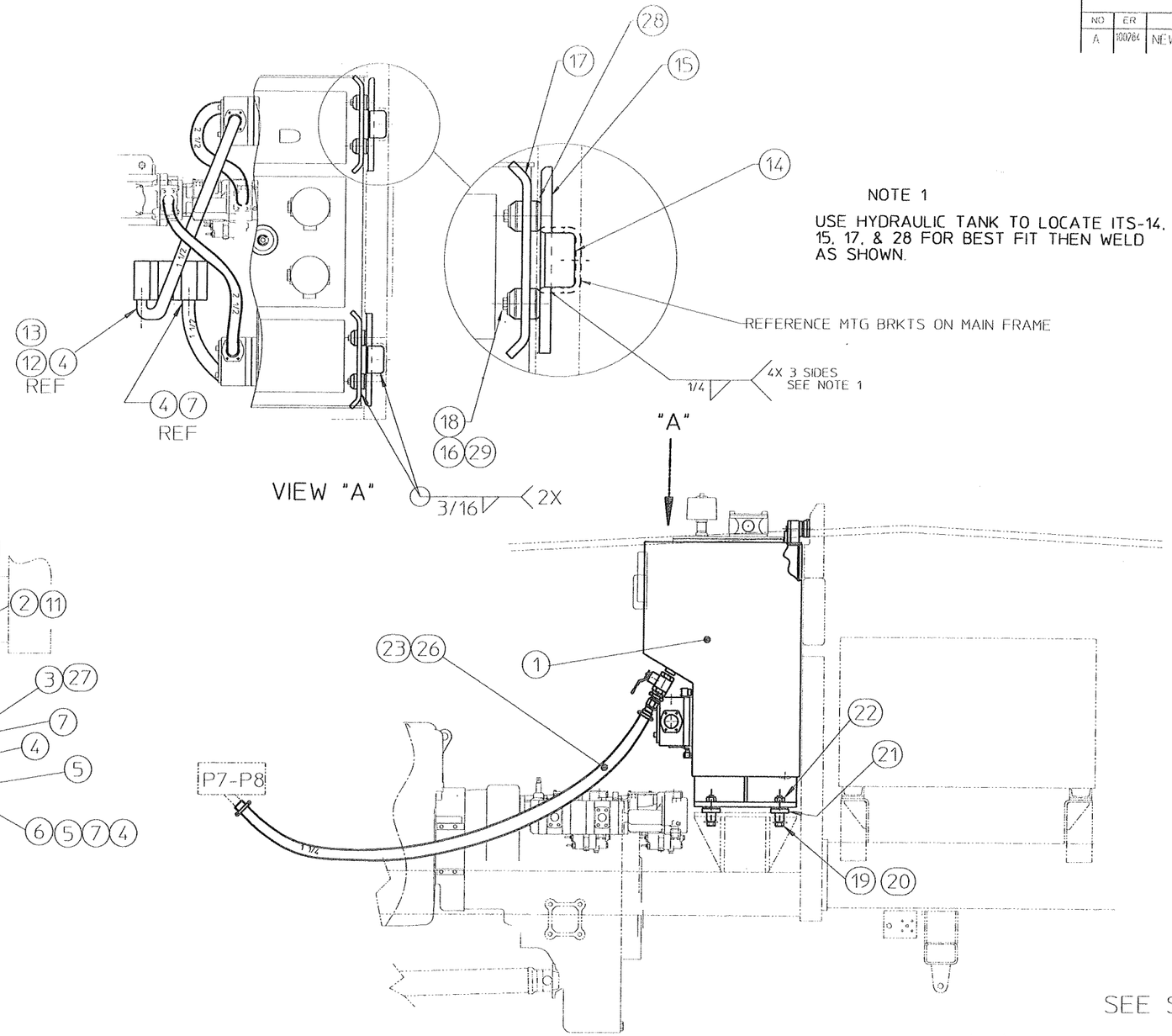

NOTE 1

USE HYDRAULIC TANK TO LOCATE ITS-14, 15, 17, & 28 FOR BEST FIT THEN WELD AS SHOWN.

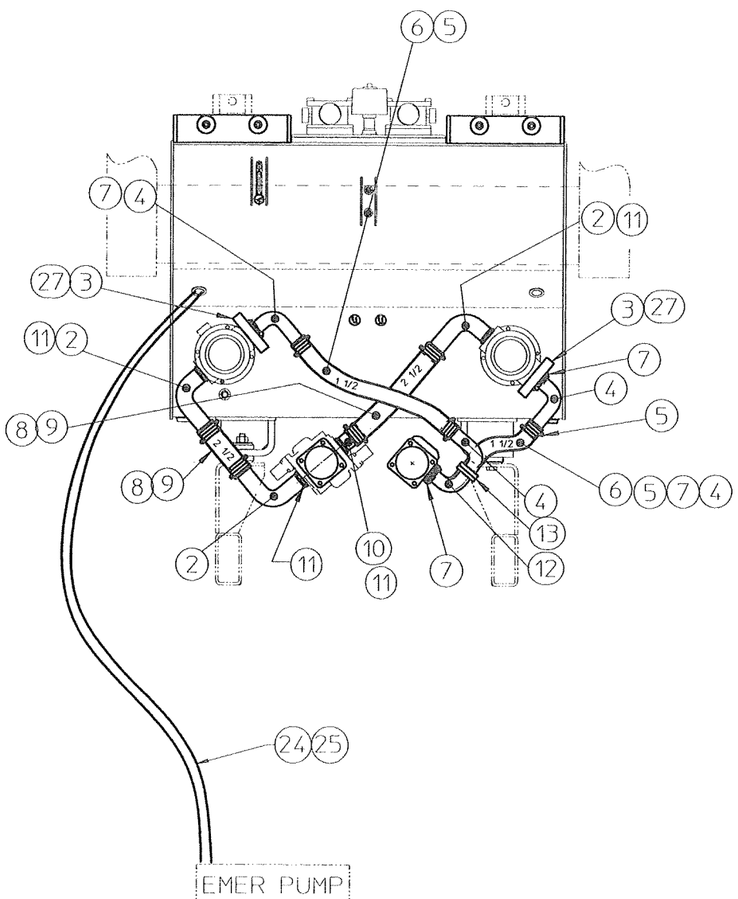

SEE SEPARATE PARTS LIST

FIG NO	ITEM NO	PART NUMBER	DESCRIPTION AND MATERIAL SIZE (REF ONLY)	QTY

IMPLIED TOLERANCES
ALL DIMENSIONS ARE IN INCHES-TOLERANCE UNLESS OTHERWISE SPECIFIED

NOMINAL SIZE RANGE		PLUS OR MINUS			NOMINAL SIZE RANGE		PLUS OR MINUS		
OVER	TO	FRACTION	2 PLACE DECIMAL	3 PLACE DECIMAL	OVER	TO	FRACTION	2 PLACE DECIMAL	3 PLACE DECIMAL
-	1	1/64	.01	.003	6	24	3/64	.03	.008
1	6	1/32	.02	.005	24	-	1/16	.05	.010

ANGULAR DIMENSIONS PLUS OR MINUS 1 DEGREE

√ ALL MACHINED SURFACES TO HAVE A SURFACE FINISH OF 125 MICROINCHES UNLESS OTHERWISE SPECIFIED

WELDING SPECIFICATION

UNLESS OTHERWISE SPECIFIED ALL WELDS SHOULD ADHERE TO FAIRMONT TAMPER WELDING SPECIFICATION NO 101

WEIGHT lbs

3rd ANGLE PROJECTION

DO NOT SCALE

SHEET 1 CONT ON

DESCRIPTION 124
HYD TANK INSTL

DRAWN PJG	DATE 02-06-06	MACHINE TYPE MARK VI
CHECKED JOC	DATE 02-08-06	
APP-ENG JOC	DATE 02-08-06	
APP-MFG	DATE	
LAST ECR 100284	CHECKED	ENG DWG NO 4010827
	DATE	

Fairmont Tamper™
2401 Edgund Road-Box 20
Cayce-West Columbia,
South Carolina 29171-0020
(803) 822-9160

THIS DOCUMENT CONTAINS PROPRIETARY INFORMATION AND SUCH INFORMATION MAY NOT BE DISCLOSED TO OTHERS FOR ANY PURPOSE OR USED FOR MANUFACTURING PURPOSES WITHOUT THE WRITTEN PERMISSION OF FAIRMONT TAMPER

PARTS LIST

ITEM NO	PART NUMBER	DESCRIPTION	QUANTITY
1	G0515WAA	HYD TANK WLDT	1
2	D6485X03	TANK COVER	1
3	D4649Y03	TANK FLANGE GASKET	2
4	G0640YAA	RETURN COVER WLDT	1
5	D4649Y02	TANK FLANGE GASKET	1
6	A0036063	3/8-16 X 1 HHCS	74
7	A0061010	3/8 MEDIUM LOCK WASHER	74
8	C9249Y05	RETURN FILTER	2
9	L422849	1 1/2 BOSS PLUG	2
10	L423640	1 1/2 ORB X JIC STRAIGHT	2
11	G0641Y01	RESERVOIR VENT FILTER	1
12	G0641Y02	VENT FILTER ADAPTER	1
13	0-3304105-0-19	1 1/2 X 1 1/4 NPT NIPPLE	1
14	0-3330011-0-02	BALL VALVE (1 1/2 NPT)	1
15	L424336	1 1/2 NPT X 1 1/4 JIC	1
16	G0636Y01	JIC SUCTION HOSE END	1
17	0-3380000-0-05	HYDRAULIC OIL DIFFUSER	2
18	0-3351002-0-03	SUCTION FILTER	2
19	D4176Y01	MAGNET SUCTION SEPARATOR	2
20	A0036124	1/2-13 X 1 3/4 HHCS	8
21	A0061013	1/2 MEDIUM LOCK WASHER	8
22	L40672	1" HEX PIPE PLUG	2
23	A1556Y08	TEMP SWITCH 70° (1/2 NPT)	1
24	A1556Y09	TEMP SWITCH 180° (1/2 NPT)	1
25	L40061	1/2 MP NIPPLE	1
26	0-3330011-0-07	PAD-LOCKING BALL VALVE	2
27	0-3381006-0-01	5"FLUID LEVEL GA W/THERM	1
28	L424632	3/8 NPTF HEX SOCKET PLUG	2
29	L411407	1/2 NPT PLUG	1
30	L420104	1 1/4 MP X 3/4 FP BUSHING	1
31	L411376	1/2 MP X JIC STRAIGHT	1
~~32~~	~~0-3304110-0-06~~	~~1 1/4 NPT X45° ST ELL~~	~~2~~
33	L424254	3/4 X 1/2 NPT NIPPLE	1

ASSEMBLY IDENTIFIER

DWG NO: G0651WAA
SHEET: 1
CONT ON: 2
DESCRIPTION (24): HYD TANK ASSY
DRAWN: A.OUZTS
DATE: 15AUG96
CHECKED: DGV
DATE: 27AUG96
APP: A.LINDSEY
DATE: 21AUG96
APP:
DATE:

MKVI

ASSEMBLY DESCRIPTION

ER
DR
CK
APP
MF

REVISIONS

NO	ER	DESCRIPTION	DR	CK	APP	MF
1	8095.93	RELEASED	AO	DGV	AML	
2	8678.95	ITEM 2 QTY WAS 2 ITEM 13 & 14 QTY WAS 2 ITEM 26 QTY WAS 1 ITEM 28 P/N WAS L424632 ITEM 30 P/N WAS L41383 ITEM 31 P/N WAS L411375 ITEM 32 & 33 ADDED	LES	DGV	AML	
4	10554.11	ITEM 6 & 7 QTY WAS 66 ITEM 8 P/N WAS D4376Y01	LES	DGV	AML	
F	100029	DEL IT-32.	PJG	JOC	JOC	

SHEET 1 CONT ON 2
LAST ECR 10002 9
CHECKED hwi
DATE 14-Nov-05
DWG NO G0651WAA

Fairmont Tamper™
2401 Edmund Road-Box 20
Cayce-West Columbia,
South Carolina 29171-0020
(803) 822-9160

PARTS LIST

ASSEMBLY IDENTIFIER

ITEM NO	PART NUMBER	DESCRIPTION	QUANTITY
34	D6485X06	MEBAC HYD TANK COVER	1
35	0-3381010-0-13	FILLER CAP, NON-VENTED	1
36	0-3304203-0-08	-16 SAE BOSS PLUG	2
37	0-3304118-0-13	2 1/2 NPT SQ. SOC. PLUG	2

DWG NO G0651WAA

SHEET 2 CONT ON -

DESCRIPTION (24) HYD TANK ASSY

DRAWN LES DATE 07/03/97

CHECKED DGV DATE 07/03/97

APP AML DATE 07/03/97

APP DATE

MKVI

ASSEMBLY DESCRIPTION

ER

DR

CK

APP

MF

REVISIONS

NO	ER	DESCRIPTION	DR	CK	APP	MF
2	8678.95	ITEM 34 ADDED	LES	DGV	AML	
3	10947.1	ITEM 35 ADDED	PJG	HW	AML	
4	10554.11	ITEM 36 ADDED	LES	DGV	AML	
5	11186.1	ITEM 37 ADDED	JBR	HW	AML	
F		NO CHANGE				

SHEET 2 CONT ON - LAST ECR 10002 9 CHECKED hwi DATE 14-Nov-05

DWG NO G0651WAA

Fairmont Tamper™
2401 Edmund Road-Box 20
Cayce-West Columbia,
South Carolina 29171-0020
(803) 822-9160

DATE

ENG.DWG.NO.
G0651WAA

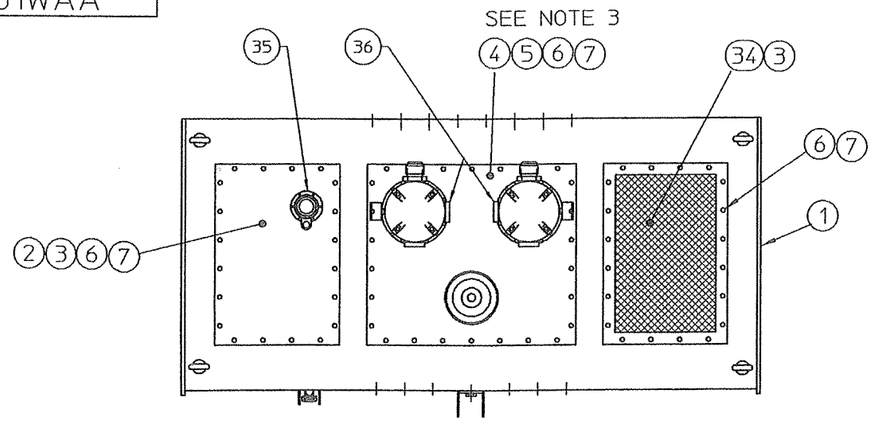

NOTES:

1. PERFORATED SIDE OF FLOW DIFFUSERS ARE TO BE DIRECTED TOWARD TANK WALL (AS SHOWN).
2. CAP OR PLUG ALL OPEN LINES TO PREVENT CONTAMINANTS FROM ENTERING HYDRAULIC SYSTEM.
3. STAMP RESERVOIR "243 GALLONS MAXIMUM CAPACITY", 1/2" HIGH LETTERS NEXT TO FILLER CAP.
4. APPLY D5893Y01 GASKET CEMENT TO BOTH SIDES OF GASKET AND MATING SURFACES. LET GASKET DRY UNTIL NO LONGER TACKY. UPON INSTALLATION TORQUE MOUNTING CAP SCREWS TO 50 LB.FT.

REVISIONS

NO	ER	DESCRIPTION	ZONE	DR	CK	APP	MF
1	8095.93	RELEASED		AO	DGV	AML	
2	8678.95	NOTES 1 THROUGH 4 ADDED ITEM 32 & 34 ADDED		LES	DGV	AML	
3	10947.1	ITEM 35 ADDED		PJG	HW	AML	
4	10554.11	UPDATED PICTORAL		LES	DGV	AML	
5	11186 .1	UPDATED PICTORAL & ADDED IT-37 11/18/98		JBR	HW	AML	
F	100029	UPDATED PICTORAL & DEL ITEM 32.		PJG	JOC	JOC	

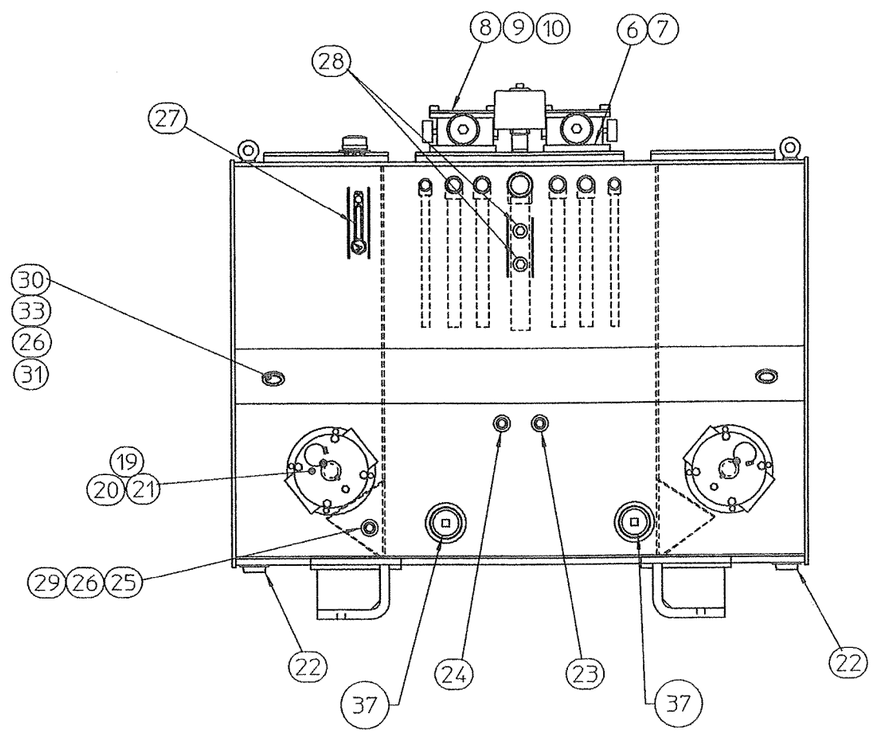

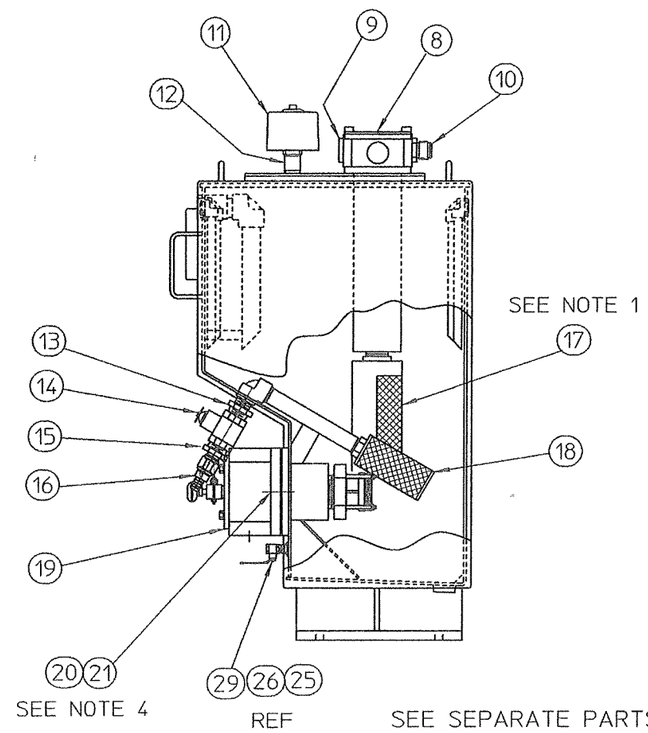

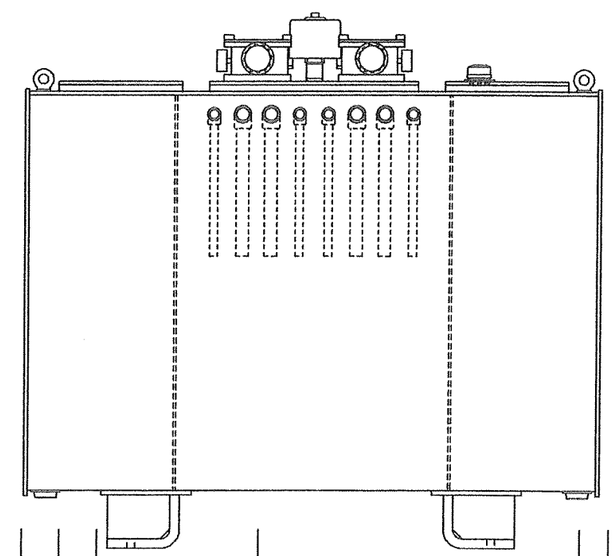

SEE SEPARATE PARTS LIST

FIG NO.	ITEM NO.	PART NUMBER	DESCRIPTION AND MATERIAL SIZE (REF.ONLY)	QTY

IMPLIED TOLERANCES
ALL DIMENSIONS ARE IN INCHES-TOLERANCE UNLESS OTHERWISE SPECIFIED

NOMINAL SIZE RANGE		PLUS OR MINUS			NOMINAL SIZE RANGE		PLUS OR MINUS		
OVER	TO	FRACTION	2 PLACE DECIMAL	3 PLACE DECIMAL	OVER	TO	FRACTION	2 PLACE DECIMAL	3 PLACE DECIMAL
-	1	1/64	.01	.003	6	24	3/64	.03	.008
1	6	1/32	.02	.005	24	-	1/16	.05	.010

ANGULAR DIMENSIONS PLUS OR MINUS 1 DEGREE

√ ALL MACHINED SURFACES TO HAVE A SURFACE FINISH OF 125 MICRONCHES UNLESS OTHERWISE SPECIFIED.

WELDING SPECIFICATION

UNLESS OTHERWISE SPECIFIED ALL WELDS SHOULD ADHERE TO FAIRMONT TAMPER WELDING SPECIFICATION NO. 101

WEIGHT lbs.

3rd ANGLE PROJECTION

DO NOT SCALE

SHEET 1 CONT. ON –

DESCRIPTION (24)
HYD TANK ASSY

DRAWN A.OUZTS	DATE 14 AUG 96	MACHINE TYPE MK VI
CHECKED DGV	DATE 27 AUG 96	
APP-ENG A.LINDSEY	DATE 21 AUG 96	
APP-MFG	DATE	
LAST ECR. 10002 9	CHECKED hwi DATE 14-Nov-05	ENG.DWG.NO. G0651WAA

Fairmont Tamper™ 2401 Edmund Road-Box 20 Cayce-West Columbia, South Carolina 29171-0020 (803) 822-9160

THIS DOCUMENT CONTAINS PROPRIETARY INFORMATION AND SUCH INFORMATION MAY NOT BE DISCLOSED TO OTHERS FOR ANY PURPOSE OR USED FOR MANUFACTURING PURPOSES WITHOUT THE WRITTEN PERMISSION OF FAIRMONT TAMPER.

PARTS LIST

ITEM NO	PART NUMBER	DESCRIPTION	QUANTITY
1	0-3316003-0-04	EMERGENCY PUMP	1
2	0-3316003-0-05	BASE PLATE	1
3	A0036065	3/8-16 X 1 1/4 HHCS	4
4	A0059003	3/8 FLAT WASHER	8
5	L40387	3/8-16 ESNA NUT	4
6	L424528	ADAPTER 3/8 FP - JIC	1
7	L425297	REDUCER 3/8 MP-1/8 FP	1
8	C8568Y01	ELEC. BOX REWORK	1
9	A0655Y01	SWITCH, P.B. MOM, RED	1
10	A0653Y01	CONTACT BLOCK (NO NO)	1
11	C8578Y01	BOX COVER REWORK	1
12	A1230Y17	3/4 IN ST STRAIN RELIEF	1
13	A0036006	1/4-20 X 1 1/4 HHCS	2
14	A0061008	1/4 MEDIUM LOCK WASHER	2
15	A0055009	1/4-20 HEX NUT	2
16	A1920Y20	FILM INSERT EMER. PUMP	1
17	L411386	ADAPTER 3/8 MP - 1/2 JIC	1
18	L423976	90° ELBOW 3/8 MP-1/4 MP	1
19	A1299Y02	TEE 1/4 MP-MP-FP	1
20	L411385	FTG 1/4 MP-1/4 JIC	2
21	L41208	3PSI CHECK VALVE -4	2

ASSEMBLY IDENTIFIER

DWG NO C8563WAC

SHEET 1

CONT ON -

DESCRIPTION (24) EMERGENCY PUMP INSTL

DRAWN A.OUZTS

DATE 24 MAR 98

CHECKED

DATE

APP

DATE

APP

DATE

REVISIONS

NO	ER	DESCRIPTION	DR	CK	APP	MF
1	10899	RELEASED				

SHEET 1

CONT ON -

LAST ER 10899 .1

CHECKED hw

DATE 6-Apr-98

DWG NO C8563WAC

ASSEMBLY DESCRIPTION

ER

DR

CK

APP

MF

Fairmont Tamper™
2401 Edward Road-Box 20
Cayce-West Columbia
South Carolina 29171-0020
(803) 822-9160

ENG.DWG NO. C8563WAC

REVISIONS							
NO	ER	DESCRIPTION	ZONE	DR	CK	APP	MF
1	10899	RELEASED					

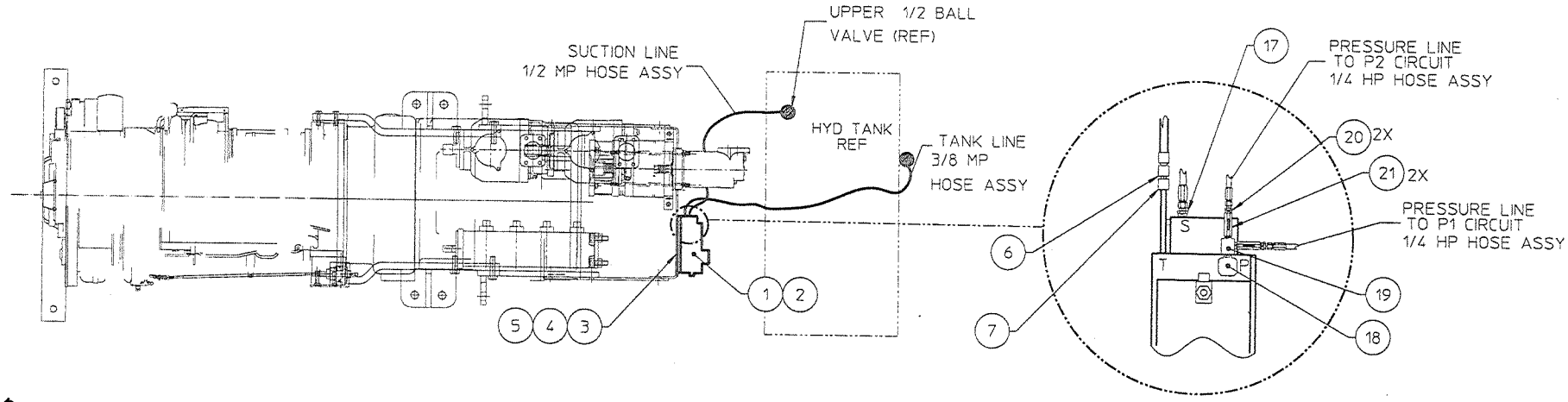

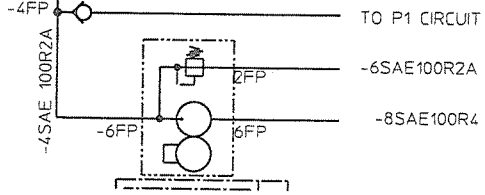

EMERGENCY PUMP HYD SCHEMATIC

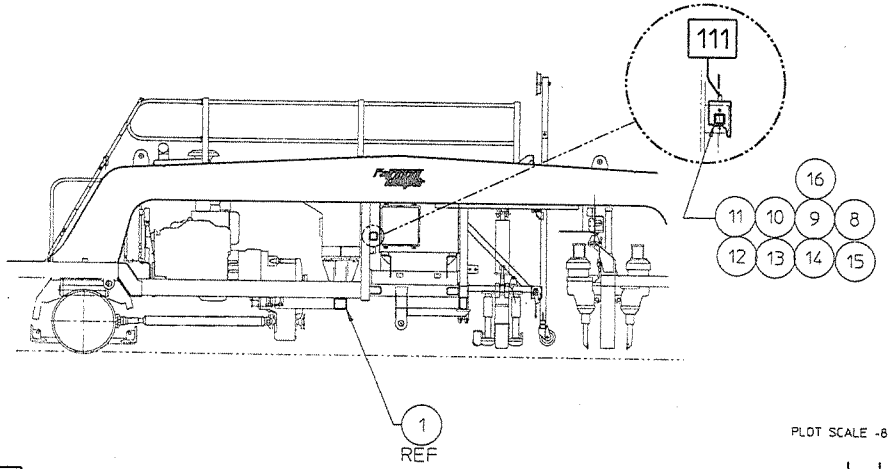

NOTES:

1) HOSE ASSY'S ARE CALLED UP IN HOSE KIT.

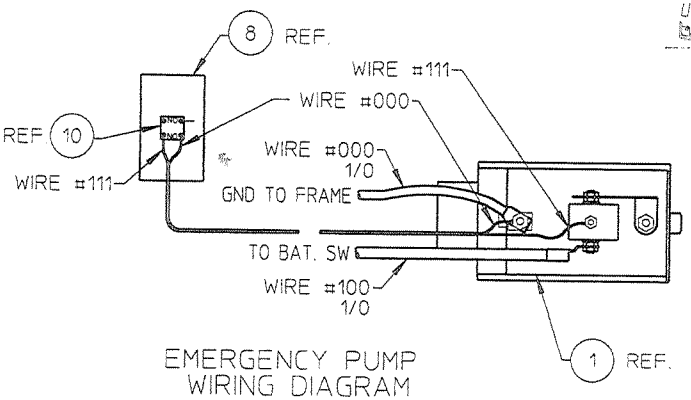

EMERGENCY PUMP WIRING DIAGRAM

PLOT SCALE -8

FIG NO.	ITEM NO.	PART NUMBER	DESCRIPTION AND MATERIAL SIZE (REF.ONLY)	QTY

IMPLIED TOLERANCES ALL DIMENSIONS ARE IN INCHES-TOLERANCE UNLESS OTHERWISE SPECIFIED									
NOMINAL SIZE RANGE		PLUS OR MINUS			NOMINAL SIZE RANGE		PLUS OR MINUS		
OVER	TO	FRACTION	2 PLACE DECIMAL	3 PLACE DECIMAL	OVER	TO	FRACTION	2 PLACE DECIMAL	3 PLACE DECIMAL
-	1	1/64	.01	.003	6	24	3/64	.03	.008
1	6	1/32	.02	.005	24	-	1/16	.05	.010

ANGULAR DIMENSIONS PLUS OR MINUS 1 DEGREE

ALL MACHINED SURFACES TO HAVE A SURFACE FINISH OF 125 MICRONCHES UNLESS OTHERWISE SPECIFIED

WELDING SPECIFICATION

UNLESS OTHERWISE SPECIFIED ALL WELDS SHOULD ADHERE TO FAIRMONT TAMPER WELDING SPECIFICATION NO. 101

WEIGHT

THIRD ANGLE PROJECTION

DO NOT SCALE

SHEET 1 CONT. — OF —

DESCRIPTION (2)
EMERGENCY PUMP INSTL

DRAWN A OUZTS	DATE 24 MAR 98	MACHINE TYPE MK VI	
CHECKED	DATE		
APP-ENG	DATE		
APP-MFG	DATE		
LAST CH. 10899	CHECKED Dwg	ENGINEERING C8563WAC	
1	DATE 6-Apr-98		

Fairmont Tamper
2401 Edward Road-Box 20
Clark-View Country
South Corning 29171-0220
(803) 925-9160

THIS DOCUMENT CONTAINS PROPRIETARY INFORMATION AND SUCH INFORMATION MAY NOT BE DISCLOSED TO OTHERS FOR ANY PURPOSE OR USED FOR MANUFACTURING PURPOSES WITHOUT THE WRITTEN PERMISSION OF FAIRMONT TAMPER

ENG.DWG.NO.
G3371WAA

REVISIONS								
NO	ER	DESCRIPTION	ZONE	DR	CK	APP	MF
1	8678.93	NEW RELEASE		PJG			

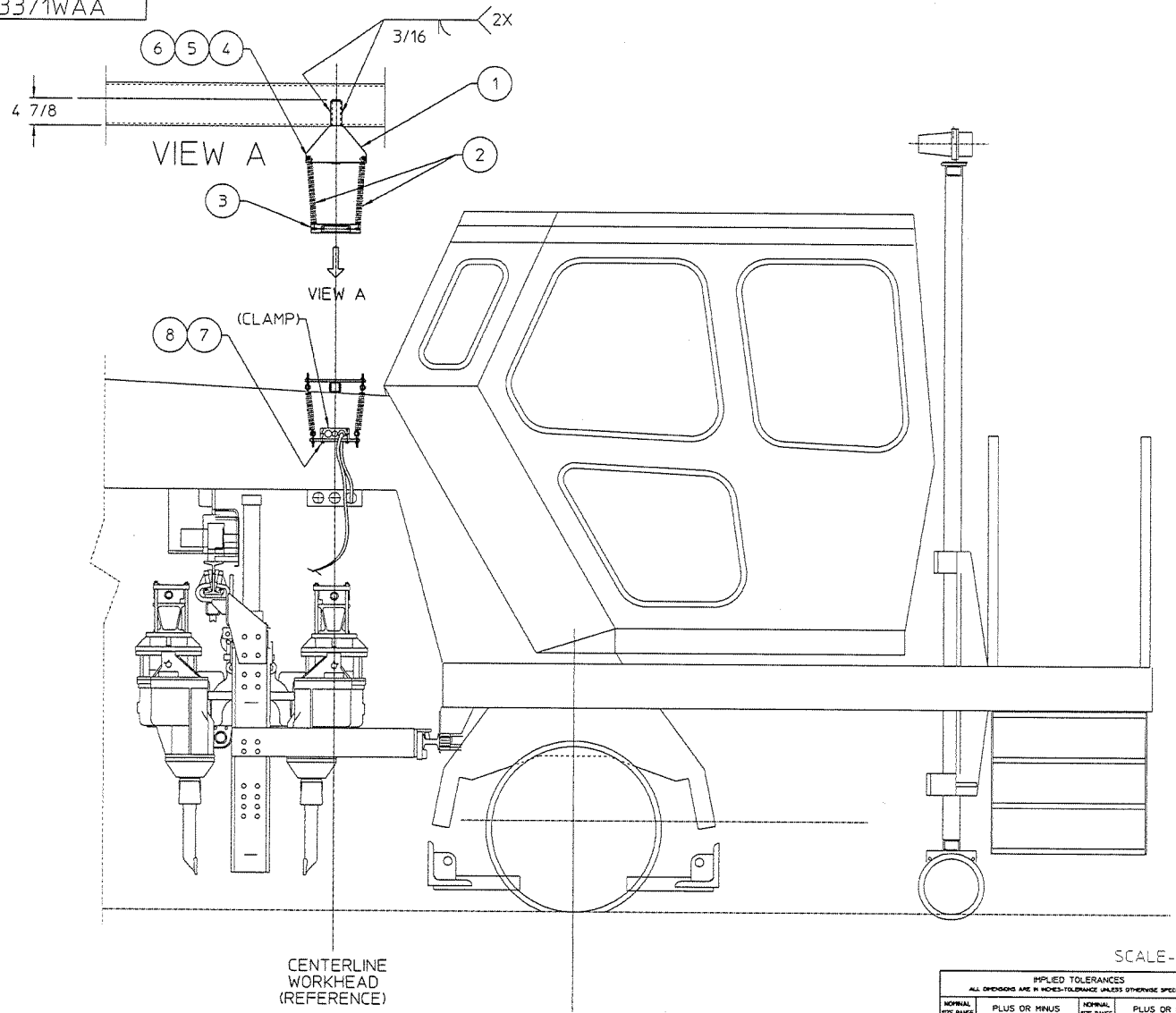

NOTES:

1. THIS ASSEMBLY IS REQUIRED ON BOTH SIDES. THE LEFT SIDE ONLY IS PICTURED HERE.
2. BOLT IT 3, SPRING HOOK BAR, TO EXISTING CLAMP. ADJUST ALL CLAMPS ON HOSES TO ENSURE THEY WILL NOT RUB DURING WORK.
3. RUN IT 4, 1/4-20 ESNA NUT, ON EYE BOLT SO EYE BOLT CAN SWIVEL.

SCALE-10

MK VI LEFT SIDE VIEW

FIG NO.	ITEM NO.	PART NUMBER	DESCRIPTION AND MATERIAL SIZE (REF.ONLY)	QTY
	8	A0036038	5/16-18 X 2 HHCS	4
	7	A0060012	5/16 LOCK WASHER	4
	6	A0066002	1/4-20X2 BENT EYE BOLT	8
	5	L40237	1/4-20 ESNA NUT	8
	4	A0055009	1/4-20 HEX NUT	8
	3	G3246Y01	SPRING HOOK BAR	2
	2	0-3641001-0-35	EXTENSION SPRING	4
	1	G3265WAA	SPRING SUPPORT	2

IMPLIED TOLERANCES
ALL DIMENSIONS ARE IN INCHES-TOLERANCE UNLESS OTHERWISE SPECIFIED

NOMINAL SIZE RANGE OVER	TO	PLUS OR MINUS FRACTION	2 PLACE DECIMAL	3 PLACE DECIMAL	NOMINAL SIZE RANGE OVER	TO	PLUS OR MINUS FRACTION	2 PLACE DECIMAL	3 PLACE DECIMAL
-	1	1/64	.01	.003	6	24	3/64	.03	.006
1	6	1/32	.02	.005	24	-	1/16	.05	.010

ANGULAR DIMENSIONS PLUS OR MINUS 1 DEGREE

ALL MACHINED SURFACES TO HAVE A SURFACE FINISH OF 125 MICROINCHES UNLESS OTHERWISE SPECIFIED.

WELDING SPECIFICATION

UNLESS OTHERWISE SPECIFIED ALL WELDS SHOULD ADHERE TO FAIRMONT TAMPER WELDING SPECIFICATION NO. 101

WEIGHT LBS.

3rd ANGLE PROJECTION

DO NOT SCALE

SHEET 1 CONT. - ON -

DESCRIPTION (2)
HOSE SUPPORT SPRING ASSY

DRAWN PJG	DATE 06-03-97	MACHINE TYPE MARK VI
CHECKED HW	DATE 06-05-97	
APPROVED HAP	DATE 06-05-97	
APP-MFG	DATE	
LAST ECN 8678.93	CHECKED DVDO	DATE 1-Jun-98

Fairmont Tamper
3401 Edmund Road-Box 25
Cayce-West Columbia,
South Carolina 29171-0020
(803) 822-9160

DRAWING G3371WAA

THIS DOCUMENT CONTAINS PROPRIETARY INFORMATION AND SUCH INFORMATION MAY NOT BE DISCLOSED TO OTHERS FOR ANY PURPOSE OR USED FOR MANUFACTURING PURPOSES WITHOUT THE WRITTEN PERMISSION OF FAIRMONT TAMPER.

CONFIDENTIAL

© COPYRIGHT 2001 HARSCO TRACK TECHNOLOGIES. THIS DRAWING OR DOCUMENT IS THE PROPERTY OF HARSCO TRACK TECHNOLOGIES AND EMBODIES CONFIDENTIAL INFORMATION, TRADE SECRET INFORMATION, AND/OR KNOW-HOW THAT IS THE PROPERTY OF HARSCO TRACK TECHNOLOGIES. BY ACCEPTING THIS DRAWING OR DOCUMENT, THE RECIPIENT AGREES (1) NOT TO PROVIDE, OR OTHERWISE MAKE AVAILABLE, THE DRAWING OR DOCUMENT, OR ANY INFORMATION OR KNOW-HOW EMBODIED THEREIN, TO ANY THIRD PARTY AND (2) NOT TO REPRODUCE OR USE THE DRAWING OR DOCUMENT TO MANUFACTURE ANY APPARATUS OR DEVICE, WITHOUT THE PRIOR WRITTEN AUTHORIZATION OF HARSCO TRACK TECHNOLOGIES.

SOLID EDGE DRAWING

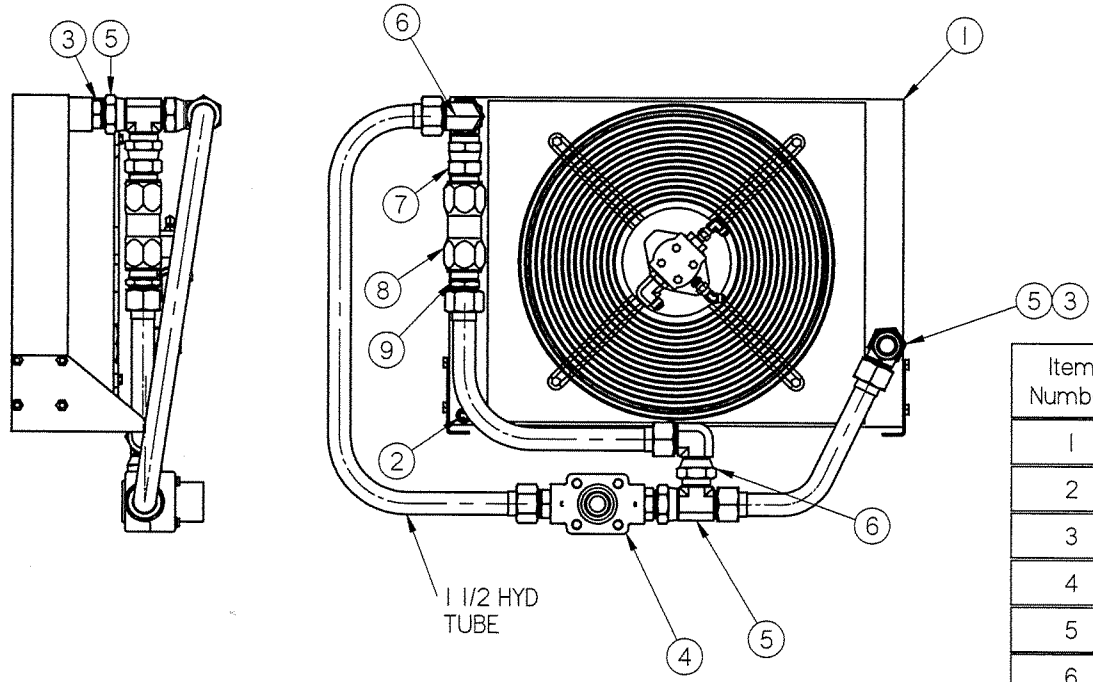

Item Number	Document Number	Title	Quantity
1	4001051	OIL COOLER	1
2	A1556Y21	TEMPERATURE SWITCH	1
3	0-3304028-0-29	1 1/4 ORB X 1 1/2 JIC	4
4	4001118	AKG 3-WAY THERMOSTATIC VALVE	1
5	0-3304057-0-17	1 1/2 FJIC-MJIC-MJIC TSWR	3
6	0-3304148-0-13	1 1/2 SW JIC / 90 JIC	2
7	407979	1 1/ 2 NTP X 1 1/2 SW JIC STR	1
8	L425375	1 1/2 CHECK VALVE	1
9	L411384	1 1/2 NPT X 1 1/2 JIC STR	1

IMPLIED TOLERANCES

ALL DIMENSIONS ARE IN INCHES - TOLERANCE UNLESS OTHERWISE SPECIFIED

NOMINAL SIZE RANGE		INCH PLUS OR MINUS		NOMINAL SIZE RANGE		METRIC PLUS OR MINUS	
OVER	TO	2 PLACE DECIMAL	3 PLACE DECIMAL	OVER	TO	1 PLACE DECIMAL	2 PLACE DECIMAL
0	6	.03	.005	0	150	.8	.13
6	24	.04	.008	150	600	1.0	.20
24	-	.06	.010	-	600	1.5	.25

UNLESS OTHERWISE SPECIFIED ALL MACHINED SURFACES WILL HAVE:
A SURFACE FINISH OF 125 MICROINCHES
ANGULAR TOLERANCE OF ± .50°
CONCENTRICITY WITHIN .010

THIRD ANGLE PROJECTION

UNLESS OTHERWISE SPECIFIED ALL WELDS SHOULD ADHERE TO THE LATEST HTT WELDING SPECIFICATION 101

CHANGE	R/L	REVISION	DATE
100340	A	RELEASE	

Description: OIL COOLER ASSY

Drawing Number: ----------

Machine Type: TS-30

Model: 4011115.asm

Drawn: badler

Date Drawn: 3/3/06

Weight: 181.015 lbm

Scale: 1:4

APVD Desg: BPA

APVD ChEng: JBR

Mat'l

HTT
Harsco Track Technologies
Harsco
Columbia, SC

Part Number: 4011115

Size: B

Sheet: 1 of 1

Plotted by badler on 6/29/2007 4011115.dft

Pneumatic System and Components

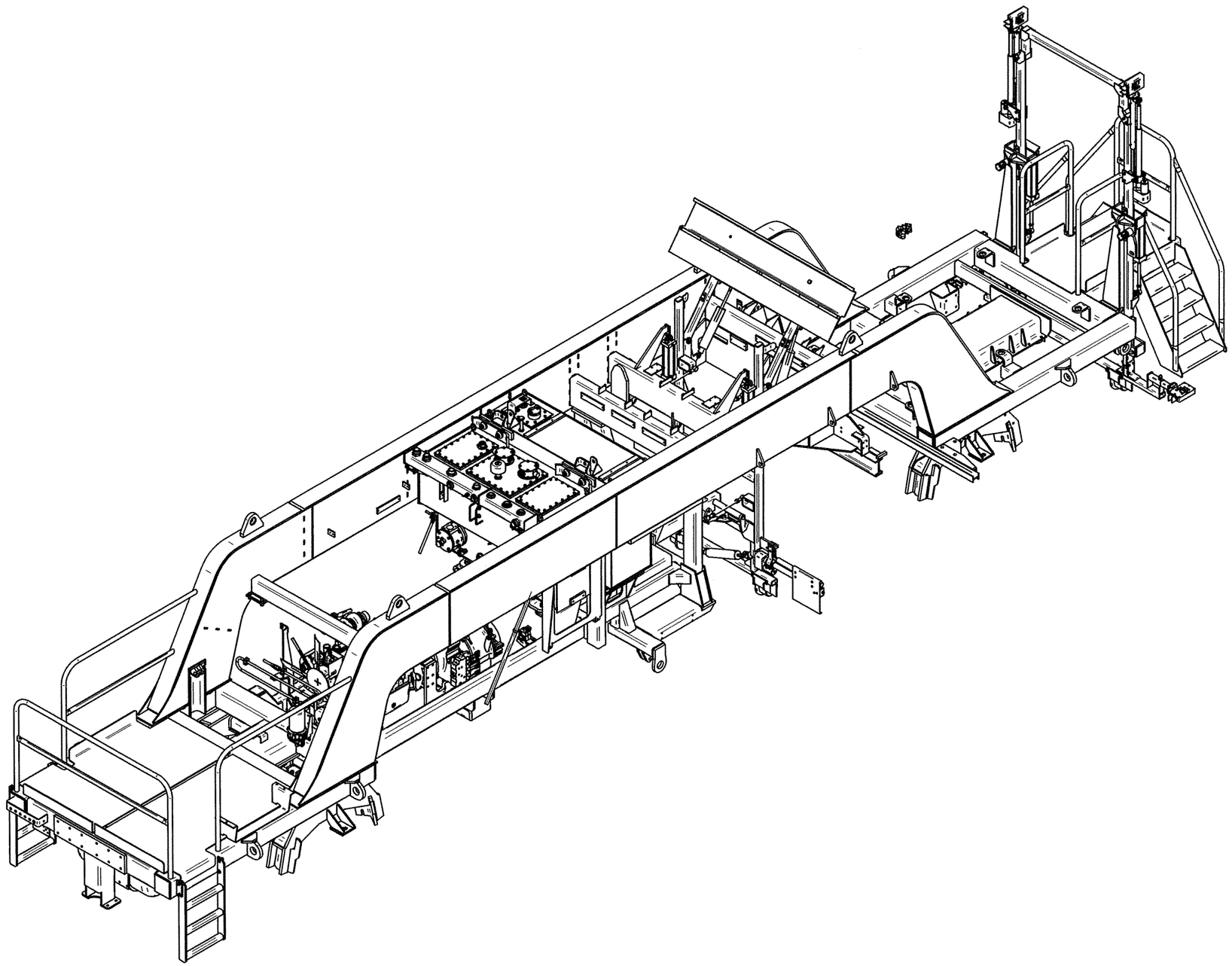

It No	Part Number	Description	Qty
1	D4121Y02	PRESS REG VALVE SOL 24VDC	1
3	C9785X15	AIR DRYER	1
5	H5133WAA	M12 ENG OIL PRESS COND	1
6	L423617	SAFETY VALVE	1
7	0-3404000-0-17	AIR RECEIVER, 30 GAL	1
9	0-3432000-0-02	FILTER AIR LINE MTG	1
10	A6519Y01	PRESSURE PROTECTION VALVE	1
11	A7811Y01	AIR MANIFOLD	1
15	D0393Y02	AIR VALVE	2
16	0-3401000-0-05	MANIFOLD, INPILOT	2
19	0-3350004-0-06	DUST EXCLUDER	1
~~23*~~	~~L422845~~	~~REGULATOR, AIR~~	~~3~~
27	0-3413003-0-15	AIR VALVE	3
34	L424009	FILTER,1/8 NPT 40 MICRON	1
36	0-3410004-0-02	VERSA SHUTTLE VALVE	3
37	C7786XAB	INDEX BRAKE VALVE ASSY	1
38	A5045Y01	R-12 RELAY VALE	2
39	A5045Y02	R-14 RELAY VALE	2
~~41*~~	~~C7786XAA~~	~~SPLINE ENGAGE VALVE ASSY~~	~~1~~
42	502673000	HUMPHREY VALVE	1
44	C7788XAA	SHADOWBOARD VALVE ASSY	1
49	D4741Y01	VALVE, LIFT/LOWER	4
~~51~~	~~Z2423~~	~~LOW PRESSURE INDICATOR~~	~~1~~
~~52*~~	~~0-3410004-0-04~~	~~1/2 NPT SHUTTLE VALVE~~	~~3~~
53*	L422629	QUICK DUMP VALVE	4
56	A0758Y14	ORIFICE FITTING 0.125	1
57	4012358	REGULATOR W/CHECK	2
59	L423741	BREATHER 1/4-18 NPT	1
60	L40316	GAUGE SNUBBER	1
63	4002797	MTG BRKT	1
64	A5044Y03	TANK MTG BKT, 16" DIA	1
65	B5827X01	AIR VALVE BRKT	1
66	B5827X02	AIR VALVE BRKT	1
67	0-3401000-0-08	MOUNTING BRACKET	1
69	G5314Y02	RECEIVER BUGGY NAMEPLATE	1
70	C7760Y01	REC LIFT MTG PLATE	1
71	0-3422001-0-02	3/4 COPPER TUBING	20
72	0-3421001-0-03	3/4 TEFLON HOSE	10
73	0-3304120-0-08	3/4 JIC TUBE NUT	2
74	0-3304121-0-08	3/4 JIC TUBE SLEEVE	2
75	L425309	3/4 TUBE CLAMP	4
76	0-3425004-0-03	-12 JIC SW TEFLON HOSE END	2

CONFIDENTIAL

© COPYRIGHT 2001 HARSCO TRACK TECHNOLOGIES. THIS DRAWING OR DOCUMENT IS THE PROPERTY OF HARSCO TRACK TECHNOLOGIES AND EMBODIES CONFIDENTIAL INFORMATION, TRADE SECRET INFORMATION, AND/OR KNOW-HOW THAT IS THE PROPERTY OF HARSCO TRACK TECHNOLOGIES. BY ACCEPTING THIS DRAWING OR DOCUMENT, THE RECIPIENT AGREES (1) NOT TO PROVIDE, OR OTHERWISE MAKE AVAILABLE, THE DRAWING OR DOCUMENT, OR ANY INFORMATION OR KNOW-HOW EMBODIED THEREIN, TO ANY THIRD PARTY AND (2) NOT TO REPRODUCE OR USE THE DRAWING OR DOCUMENT TO MANUFACTURE ANY APPARATUS OR DEVICE, WITHOUT THE PRIOR WRITTEN AUTHORIZATION OF HARSCO TRACK TECHNOLOGIES.

SOLID EDGE DRAWING

IMPLIED TOLERANCES

ALL DIMENSIONS ARE IN INCHES - TOLERANCE UNLESS OTHERWISE SPECIFIED

NOMINAL SIZE RANGE		INCH PLUS OR MINUS 2 PLACE DECIMAL	INCH PLUS OR MINUS 3 PLACE DECIMAL	NOMINAL SIZE RANGE		METRIC PLUS OR MINUS 1 PLACE DECIMAL	METRIC PLUS OR MINUS 2 PLACE DECIMAL
0	6	.03	.005	0	150	.8	.13
6	24	.04	.008	150	600	1.0	.20
24	-	.06	.010	-	600	1.5	.25

UNLESS OTHERWISE SPECIFIED ALL MACHINED SURFACES WILL HAVE:
A SURFACE FINISH OF 125 MICROINCHES
ANGULAR TOLERANCE OF ± 30'
CONCENTRICITY WITHIN .010

THIRD ANGLE PROJECTION

UNLESS OTHERWISE SPECIFIED ALL WELDS SHOULD ADHERE TO THE LATEST HTT WELDING SPECIFICATION

CHANGE	R/L	REVISION	DATE
ECN-100967	A	RELEASE	3/1/07
ECN-101063	B	WAS PARTS LIST ONLY - ADD SHT 2 & ITEM 56,57,59,60,76	5 May 07
		REMOVED IT 4 (G2243Y01), IT 28 (0-3400005-0-04), IT 23,41,52,53, IT 10 QTY WAS 2, IT 11 QTY WAS 3, IT 15,16, &27 QTY WAS 1, IT 36 QTY WAS 5, IT 49 QTY WAS 2, IT 63 QTY WAS 3, IT 65 & 66 QTY WAS 4	
101133	C	ADD ITEM 42 BPA	6.19.07

Description: PNEUMATIC COMPONENTS

Drawing Number: ----------

Model: 4013196.asm

Weight: 0.0 lbm

Scale: -----

Mat'l

Machine Type: MK VI NZ 42

Drawn: mtollefson 3/1/07

Appv Dwg: JOC Appv Chkg: JOC

HTT
Harsco Track Technologies
Harsco
Columbia, SC

Part Number: 4013196 | Size: D | Sheet: 1 of 2

Plotted by badler on 6/29/2007 4013196.dft

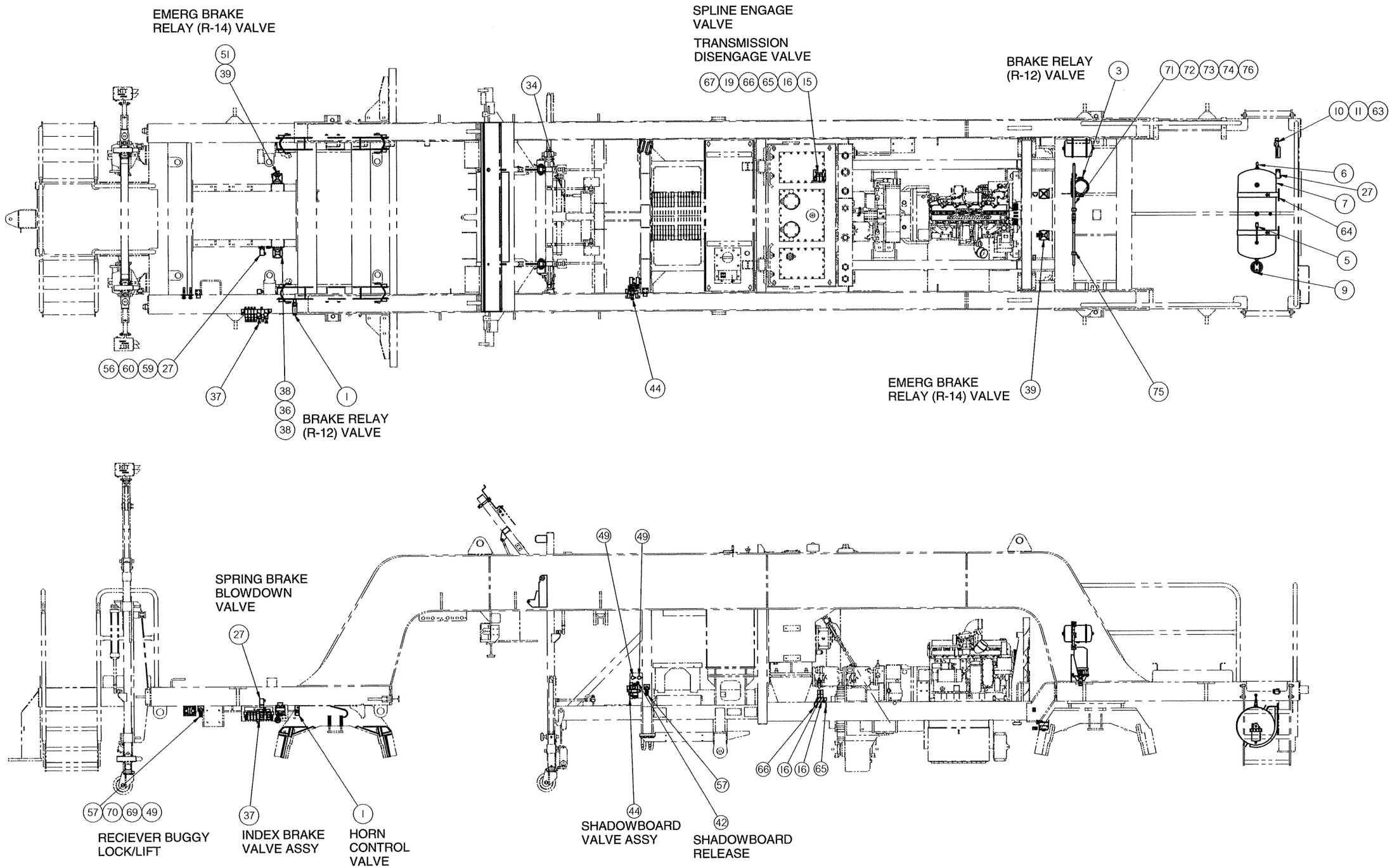

SOLID EDGE DRAWING

CONFIDENTIAL

© COPYRIGHT 2001 HARSCO TRACK TECHNOLOGIES. THIS DRAWING OR DOCUMENT IS THE PROPERTY OF HARSCO TRACK TECHNOLOGIES AND EMBODIES CONFIDENTIAL INFORMATION, TRADE SECRET INFORMATION, AND/OR KNOW-HOW THAT IS THE PROPERTY OF HARSCO TRACK TECHNOLOGIES. BY ACCEPTING THIS DRAWING OR DOCUMENT, THE RECIPIENT AGREES (1) NOT TO PROVIDE, OR OTHERWISE MAKE AVAILABLE, THE DRAWING OR DOCUMENT, OR ANY INFORMATION OR KNOW-HOW EMBODIED THEREIN, TO ANY THIRD PARTY AND (2) NOT TO REPRODUCE OR USE THE DRAWING OR DOCUMENT TO MANUFACTURE ANY APPARATUS OR DEVICE, WITHOUT THE PRIOR WRITTEN AUTHORIZATION OF HARSCO TRACK TECHNOLOGIES.

IMPLIED TOLERANCES

ALL DIMENSIONS ARE IN INCHES - TOLERANCE UNLESS OTHERWISE SPECIFIED

INCH				METRIC			
NOMINAL SIZE RANGE		PLUS OR MINUS		NOMINAL SIZE RANGE		PLUS OR MINUS	
OVER	TO	2 PLACE DECIMAL	3 PLACE DECIMAL	OVER	TO	1 PLACE DECIMAL	2 PLACE DECIMAL
0	6	.03	.005	0	150	.8	.13
6	24	.04	.008	150	600	1.0	.20
24	-	.06	.010	-	600	1.5	.25

UNLESS OTHERWISE SPECIFIED ALL MACHINED SURFACES WILL HAVE A SURFACE FINISH OF 125 MICROINCHES ANGULAR TOLERANCE OF ± 30' CONCENTRICITY WITHIN .010

THIRD ANGLE PROJECTION

UNLESS OTHERWISE SPECIFIED ALL WELDS SHOULD ADHERE TO THE LATEST HTT WELDING SPECIFICATION 101

CHANGE	R/L	REVISION	DATE
ECN-100967	A	RELEASE	3/1/07
ECN-101063	B	WAS PARTS LIST ONLY - ADD SHT 2 & ITEM 56,57,59,60,76	5 May 07
		REMOVED IT 4 (C2243Y01), IT 28 (10-3400005-0-04), IT 23,41,52,53, IT 10 QTY WAS 2, IT 11 QTY WAS 3, IT 15,16, &27 QTY WAS 1, IT 36 QTY WAS 5, IT 49 QTY WAS 2, IT 63 QTY WAS 3, IT 65 & 66 QTY WAS 4	
101133	C	ADDED IT 42 BPA	6.19.07

Description	PNEUMATIC COMPONENTS
Drawing Number	----------
Machine Type	MK VI NZ 42
Model	4013196.asm
Drawn	mtollelson
Date Drawn	3/1/07
Weight	0.0 lbm
Scale	------
APVD Dwg	JOC
APVD DrEng	JOC
Mat'l	

HTT
Harsco Track Technologies
Harsco
Columbia, SC

Part Number: 4013196 | Size: D | Sheet: 2 of 2

Plotted by badler on 6/29/2007 4013196.dft

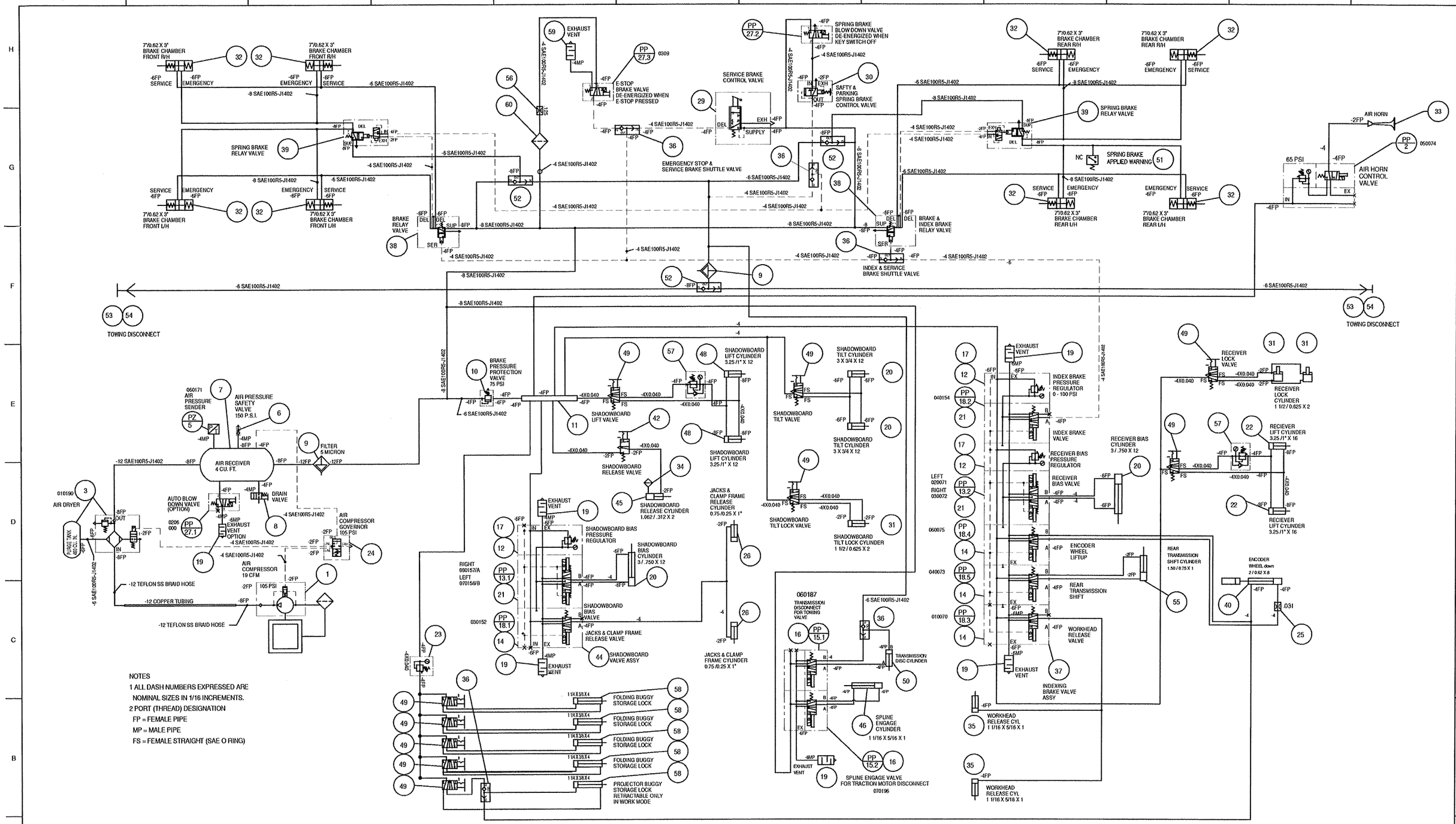

NOTES

1 ALL DASH NUMBERS EXPRESSED ARE NOMINAL SIZES IN 1/16 INCREMENTS.

2 PORT (THREAD) DESIGNATION

FP = FEMALE PIPE

MP = MALE PIPE

FS = FEMALE STRAIGHT (SAE O RING)

REF ONLY

CONFIDENTIAL

© COPYRIGHT 2001 HARSCO TRACK TECHNOLOGIES. THIS DRAWING OR DOCUMENT IS THE PROPERTY OF HARSCO TRACK TECHNOLOGIES AND EMBODIES CONFIDENTIAL INFORMATION, TRADE SECRET INFORMATION, AND/OR KNOW-HOW THAT IS THE PROPERTY OF HARSCO TRACK TECHNOLOGIES. BY ACCEPTING THIS DRAWING OR DOCUMENT, THE RECIPIENT AGREES (1) NOT TO PROVIDE, OR OTHERWISE MAKE AVAILABLE, THE DRAWING OR DOCUMENT, OR ANY INFORMATION OR KNOW-HOW EMBODIED THEREIN, TO ANY THIRD PARTY AND (2) NOT TO REPRODUCE OR USE THE DRAWING OR DOCUMENT TO MANUFACTURE ANY APPARATUS OR DEVICE, WITHOUT THE PRIOR WRITTEN AUTHORIZATION OF HARSCO TRACK TECHNOLOGIES.

SOLID EDGE DRAWING

IMPLIED TOLERANCES

ALL DIMENSIONS ARE IN INCHES - TOLERANCE UNLESS OTHERWISE SPECIFIED

NOMINAL SIZE RANGE		INCH PLUS OR MINUS 3 PLACE DECIMAL	4 PLACE DECIMAL	NOMINAL SIZE RANGE		METRIC PLUS OR MINUS 1 PLACE DECIMAL	2 PLACE DECIMAL
OVER	TO			OVER	TO		
0	6	.03	.005	0	150	.8	.13
6	24	.04	.008	150	600	1.5	.22
24	-	.06	.010	-	600	1.5	.25

UNLESS OTHERWISE SPECIFIED ALL MACHINED SURFACES WILL HAVE A SURFACE FINISH OF 125 MICRONS/125 ANGULAR TOLERANCE OF ± 0.5° CONCENTRICITY WITHIN .010

THIRD ANGLE PROJECTION

UNLESS OTHERWISE SPECIFIED ALL WELDS SHOULD ADHERE TO THE LATEST HTT WELDING SPECIFICATION 101

CHANGE	R/L	REVISION		DATE
101063	A	RELEASE		
101133	B	ADDED TOWING DISC & SHADOWBOARD TILT LOCK CIRCUIT	BPA	7.18.07

Description: PNEUMATIC SCHEMATIC

Drawing Number

Model

Weight

Scale: 1:4

Material

Machine Type: MKVI

Drawn: badler — Date/Time: 6.7.07

APVD Dwg: BPA — APVD Chkg: JBR

HTT Harsco Track Technologies, Harsco, Columbia, SC

Part Number: 4014004 — Size: D — Sheet: 1 of 2

Plotted by badler on 8/16/2007 4014004.dft

ITEM NO	PART NUMBER	DESCRIPTION	
1	G3489Y02	AIR COMPRESSOR	15 CFM HOLSET
2	D4121Y02	PRESS RED VALVE ASSY	HORN
3	C9785X15	DRYER & PURGE TANK KIT	
4	BLANK		
5	H5133WAA	SENDER	AIR TANK PRESSURE
6	L423617	SAFETY VALVE	
7	0-3404000-0-17	AIR RESERVOIR (30 GAL)	
8	A3280Y01	AIR TANK DRAIN VALVE	
9	0-3432000-0-02	AIR FILTER	
10	A6519Y01	PRESS. PROTECTION V.	
11	A7811Y01	AIR MANIFOLD	
12	0-3413005-0-18	STACKING REGULATOR	INDEX BRAKE VALVE ASSY S/B VALVE ASSY
13	D0393Y01	DBL. SOL. VALVE 3/4	REC & S/B BIAS VALVE
14	0-3401000-0-06	MANIFOLD EXPILOT	ENCODER, TRANS SHIFT, W/H REL & JACK REL
15	D0393Y02	SNGL. SOL. VALVE 2/4	TOWING DISC
16	0-3401000-0-05	MANIFOLD INPILOT	TOWING DISC
17	0-3401000-0-09	MANIFOLD, PRESS. REG.	
18	D0393Y03	SNGL. SOL. VALVE 2/4	INDEX BRAKE VALVE ASSY S/B VALVE ASSY
19	0-3350004-0-06	DUST EXCLUDER 3/8MP	
20	G5869Y01	AIR CYLINDER	BIAS REC & S/B
21	0-3401000-0-13	MANIFOLD EXPILOT	INDEX BRAKE VALVE ASSY S/B VALVE ASSY
22	C0839Y11	AIR CYLINDER LIFT	RECEIVER
23	L422845	PRESS. REGULATOR	
24	L423613	GOVERNOR	AIR COMPRESSOR
25	A0758Y06	0RIFICE FITTING 0.031	ENCODER LIFT CYLINDER
26	L424468	AIR CYL. C/F RELEASE	CLAMP FRAME
27	0-3413003-0-15	SINGLE SOLENOID VALVE	SPRING BRAKE BLOWDOWN & AUTO BLOWDOWN OPTION
28	BLANK		
29	L423629	HAND BRAKE VALVE	REAR CAB
30	L422515	SAFETY&PARKING V.	
31	A3651Y06	AIR CYLINDER	REC BUGGY LOCK
32	0-3551007-0-02	BRAKE CHAMBER	
33	Z780309-005	AIR HORN	

ITEM NO	PART NUMBER	DESCRIPTION	
34	L424009	1/8 NPT VENT	S/B RELEASE CYLINDER
35	Y767203-001	AIR CYLINDER	WORKHEAD LOCKS
36	0-3410004-0-02	SHUTTLE VALVE	
37	C7786XAB	INDEXING BRAKE VLV ASSY	
38	A5045Y01	RELAY VALVE R12	
39	A5045Y02	RELAY VALVE R14	
40	0-3470007-0-01	AIR CYLINDER	ENCODER LIFT
41	BLANK		
42	502673000	AIR VALVE 2/3	PROJ BUGGY LIFT & S/B REL
43	BLANK		
44	C7788XAA	SHADOWB'D VALVE ASSY	
45	A4771Y04	AIR CYLINDER	SHAD'BD & PROJ BUGGY LOCK
46	0-3470014-0-01	AIR CYLINDER	SPLINE ENGAGEMENT
47	BLANK		
48	C0839Y01	AIR CYLINDER	SHADOWBOARD LIFT
49	D4741Y01	AIR VALVE 2/4WAY	REC REL & LIFT, S/B LIFT, PROJ BUGGY LOCK
50	H3416XAA	AIR DISCONNECT INSTL	TRANSMISSION DISCONNECT FOR TOWING
51	Z2423	PRESSURE SWITCH 60 PSI	SPRING BRAKE WARNING
52	0-3410004-0-04	SHUTTLE VALVE 1/2"	TRANSMISSION DISCONNECT FOR TOWING
53	0-3304085-0-0-36	QUICK DISC	TRANSMISSION DISCONNECT FOR TOWING
54	0-3304086-0-17	QUICK DISC	TRANSMISSION DISCONNECT FOR TOWING
55	0-3470000-0-01	AIR CYLINDER	REAR TRANS
56	A0758Y14	FITTING FIXED ORIFICE	E-STOP CIRCUIT
57	4012358	REGULATOR W/CHECK	
58	0-3470019-0-14	AIR CYLINDER	BUGGY LOCK
59	L423741	FILTER MUFFLER	E-STOP BRAKE VALVE
60	L40316	SNUBBER, GAUGE	E-STOP BRAKE VALVE

REF ONLY

SOLID EDGE DRAWING

CONFIDENTIAL
© COPYRIGHT 2001 HARSCO TRACK TECHNOLOGIES. THIS DRAWING OR DOCUMENT IS THE PROPERTY OF HARSCO TRACK TECHNOLOGIES AND EMBODIES CONFIDENTIAL INFORMATION, TRADE SECRET INFORMATION, AND/OR KNOW-HOW THAT IS THE PROPERTY OF HARSCO TRACK TECHNOLOGIES. BY ACCEPTING THIS DRAWING OR DOCUMENT, THE RECIPIENT AGREES (1) NOT TO PROVIDE, OR OTHERWISE MAKE AVAILABLE, THE DRAWING OR DOCUMENT, OR ANY INFORMATION OR KNOW-HOW EMBODIED THEREIN, TO ANY THIRD PARTY AND (2) NOT TO REPRODUCE OR USE THE DRAWING OR DOCUMENT TO MANUFACTURE ANY APPARATUS OR DEVICE, WITHOUT THE PRIOR WRITTEN AUTHORIZATION OF HARSCO TRACK TECHNOLOGIES.

IMPLIED TOLERANCES
ALL DIMENSIONS ARE IN INCHES - TOLERANCE UNLESS OTHERWISE SPECIFIED

INCH				METRIC			
NOMINAL SIZE RANGE		PLUS OR MINUS		NOMINAL SIZE RANGE		PLUS OR MINUS	
OVER	TO	2 PLACE DECIMAL	3 PLACE DECIMAL	OVER	TO	1 PLACE DECIMAL	2 PLACE DECIMAL
0	6	.03	.005	0	150	.8	.13
6	24	.04	.010	150	600	1.0	.22
24	-	.06	.015	-	600	1.5	.25

UNLESS OTHERWISE SPECIFIED ALL MACHINED SURFACES WILL HAVE A SURFACE FINISH OF 125 MICROINCHES ANGULAR TOLERANCE OF ± 0.5° CONCENTRICITY WITHIN .010

THIRD ANGLE PROJECTION

UNLESS OTHERWISE SPECIFIED ALL WELDS SHALL CONFORM TO THE LATEST AWS WELDING SPECIFICATION

CHANGE	R/L	REVISION	DATE
101063	A	RELEASE	
101133	B	ADDED IT 52-54	7.18.07

Description: PNEUMATIC SCHEMATIC
Drawing Number
Model
Weight
Matl
Machine Type: MKVI
Drawn: badler
Date/Drawn: 6.7.07
Scale: 1:4
APVD Dwg: BPA
APVD Dwng: JBR

HTT
Harsco Track Technologies
Harsco
Columbia, SC

Part Number: 4014004
Size: D
Sheet: 2 of 2

Plotted by badler on 8/16/2007 4014004.dft

ENG.DWG.NO.
C7786XAC

REVISIONS							
NO	ER	DESCRIPTION	ZONE	DR	CK	APP	MF
1	11647.4	NEW RELEASE		MLT		HAP	
2	11647.6	DELETED ITS 2 & 3. DETAILS A & D. IT 9 WAS 0-3401000-0-13, IT 10 WAS D0393Y03. 17 NOV 00		AO	HW	AML	

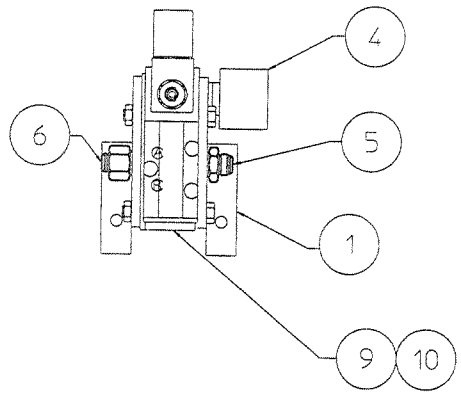

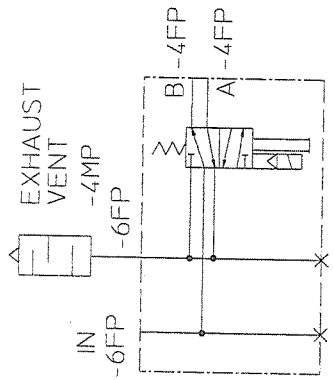

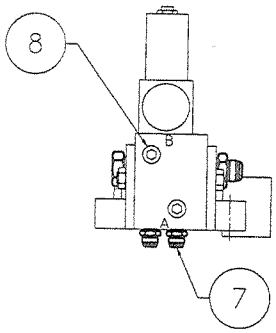

ITEM	PART NUMBER	DESCRIPTION	QTY
10	D0393Y02	VALVE SNGL. SOL. 28 VDC	1
9	0-3401000-0-05	MANIFOLD	1
8	0-3304118-0-11	PLUG HEX SOC. 1/4 NPT	2
7	L411385	ADAPTER 1/4 MP - JIC	2
6	L424632	PLUG HEX SOC. 3/8 NPT	1
5	L411387	3/8 MP - 1/4 JIC ADAPTER	1
4	0-3350004-0-06	DUST EXCLUDER	1
3			
2			
1	0-3401000-0-08	MOUNTING BRACKET	1

VALVE PARTS SEE D0391Y

PLOT SCALE = 2.5

THIS DOCUMENT CONTAINS PROPRIETARY INFORMATION AND SUCH INFORMATION MAY NOT BE DISCLOSED TO OTHERS FOR ANY PURPOSE OR USED FOR MANUFACTURING PURPOSES WITHOUT THE WRITTEN PERMISSION OF FAIRMONT TAMPER

IMPLIED TOLERANCES
ALL DIMENSIONS ARE IN INCHES-TOLERANCE UNLESS OTHERWISE SPECIFIED

NOMINAL SIZE RANGE		PLUS OR MINUS			NOMINAL SIZE RANGE		PLUS OR MINUS		
OVER	TO	FRACTION	2 PLACE DECIMAL	3 PLACE DECIMAL	OVER	TO	FRACTION	2 PLACE DECIMAL	3 PLACE DECIMAL
-	1	1/64	.01	.003	6	24	3/64	.03	.008
1	6	1/32	.02	.005	24	-	1/16	.05	.010

ANGULAR DIMENSIONS PLUS OR MINUS 1 DEGREE

√ ALL MACHINED SURFACES TO HAVE A SURFACE FINISH OF 125 MICROINCHES UNLESS OTHERWISE SPECIFIED

WELDING SPECIFICATION

UNLESS OTHERWISE SPECIFIED ALL WELDS SHOULD ADHERE TO FAIRMONT TAMPER WELDING SPECIFICATION NO. 101

WEIGHT lbs.

3rd ANGLE PROJECTION

DO NOT SCALE

SHEET 1 CONT ON —

FIG NO.	ITEM NO.	PART NUMBER	DESCRIPTION AND MATERIAL SIZE (REF.ONLY)	QTY

DESCRIPTION 124
SPLINE ENGAGE VALVE ASSY

DRAWN MLT	DATE 08/09/99	MACHINE TYPE MARK VI	
CHECKED HW	DATE 9-9-99		
APP-ENG HAP	DATE 08/10/99		
APP-MFG	DATE		
LAST ECR 11647 6	CHECKED hw	ENG.DWG.NO. C7786XAC	
	DATE 30-Nov-00		

Fairmont Tamper™
2401 Edmund Road-Box 20
Cayce-West Columbia,
South Carolina 29171-0020
(803) 822-9160

ENG.DWG.NO.
C8904XAB

REVISIONS							
NO	ER	DESCRIPTION	ZONE	DR	CK	APP	MF
1	10967	RELEASED					

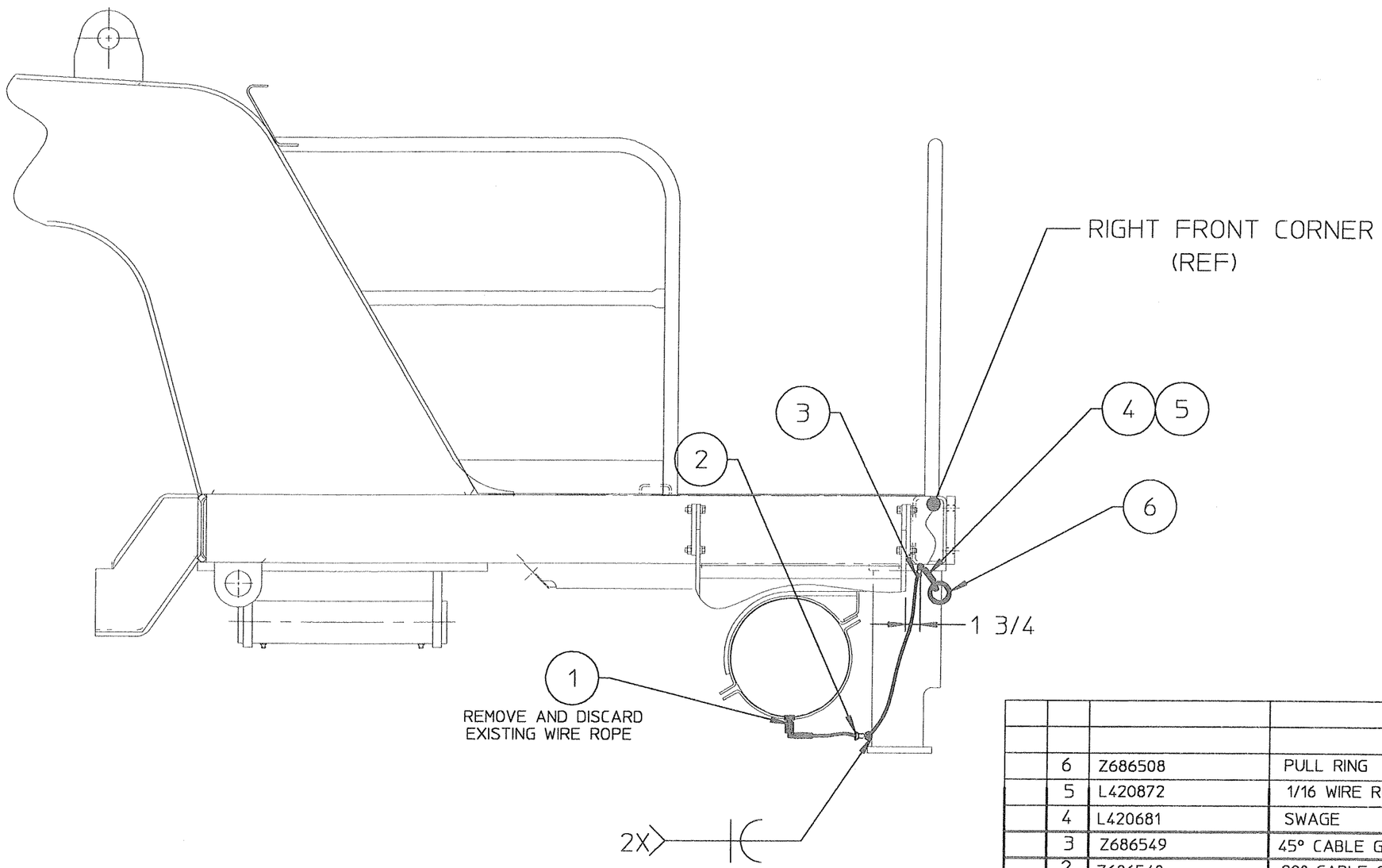

PLOT SCALE -10

FIG NO.	ITEM NO.	PART NUMBER	DESCRIPTION AND MATERIAL SIZE (REF.ONLY)	QTY
	6	Z686508	PULL RING	1
	5	L420872	1/16 WIRE ROPE	10
	4	L420681	SWAGE	4
	3	Z686549	45° CABLE GUIDE	1
	2	Z686548	90° CABLE GUIDE	1
	1	A3280Y01	DRAIN VALVE	1

IMPLIED TOLERANCES
ALL DIMENSIONS ARE IN INCHES-TOLERANCE UNLESS OTHERWISE SPECIFIED

NOMINAL SIZE RANGE		PLUS OR MINUS			NOMINAL SIZE RANGE		PLUS OR MINUS		
OVER	TO	FRACTION	2 PLACE DECIMAL	3 PLACE DECIMAL	OVER	TO	FRACTION	2 PLACE DECIMAL	3 PLACE DECIMAL
-	1	$\frac{1}{64}$	.01	.003	6	24	$\frac{3}{64}$	.03	.008
1	6	$\frac{1}{32}$	.02	.005	24	-	$\frac{1}{16}$	.05	.010

ANGULAR DIMENSIONS PLUS OR MINUS 1 DEGREE

√ ALL MACHINED SURFACES TO HAVE A SURFACE FINISH OF 125 MICROINCHES UNLESS OTHERWISE SPECIFIED.

WELDING SPECIFICATION

UNLESS OTHERWISE SPECIFIED ALL WELDS SHOULD ADHERE TO FAIRMONT TAMPER WELDING SPECIFICATION NO. 101

WEIGHT lbs.

3rd ANGLE PROJECTION

DO NOT SCALE

SHEET 1 CONT. ON —

DESCRIPTION 124
AIR DRAIN INSTL

DRAWN A.OUZTS	DATE 4 APR 98	MACHINE TYPE MK VI
CHECKED	DATE	
APP-ENG	DATE	
APP-MFG	DATE	
LAST ECR. 10967 .1	CHECKED dvan	ENG.DWG.NO. C8904XAB
	DATE 14-Apr-98	

Fairmont Tamper™
2401 Edmund Road-Box 20
Cayce-West Columbia,
South Carolina 29171-0020
(803) 822-9160

THIS DOCUMENT CONTAINS PROPRIETARY INFORMATION AND SUCH INFORMATION MAY NOT BE DISCLOSED TO OTHERS FOR ANY PURPOSE OR USED FOR MANUFACTURING PURPOSES WITHOUT THE WRITTEN PERMISSION OF FAIRMONT TAMPER.

ENG.DWG.NO.
C7786XAB

REVISIONS							
NO	ER	DESCRIPTION	ZONE	DR	CK	APP	MF
1		NEW RELEASE		LES			

DETAIL "A"

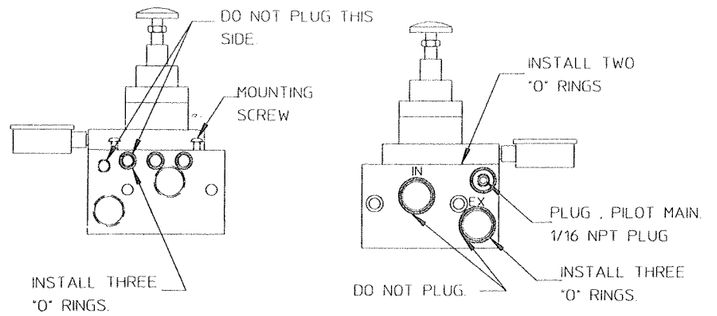

DETAIL "B"

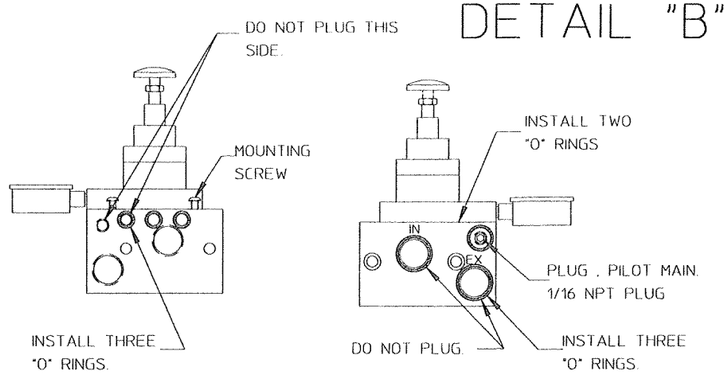

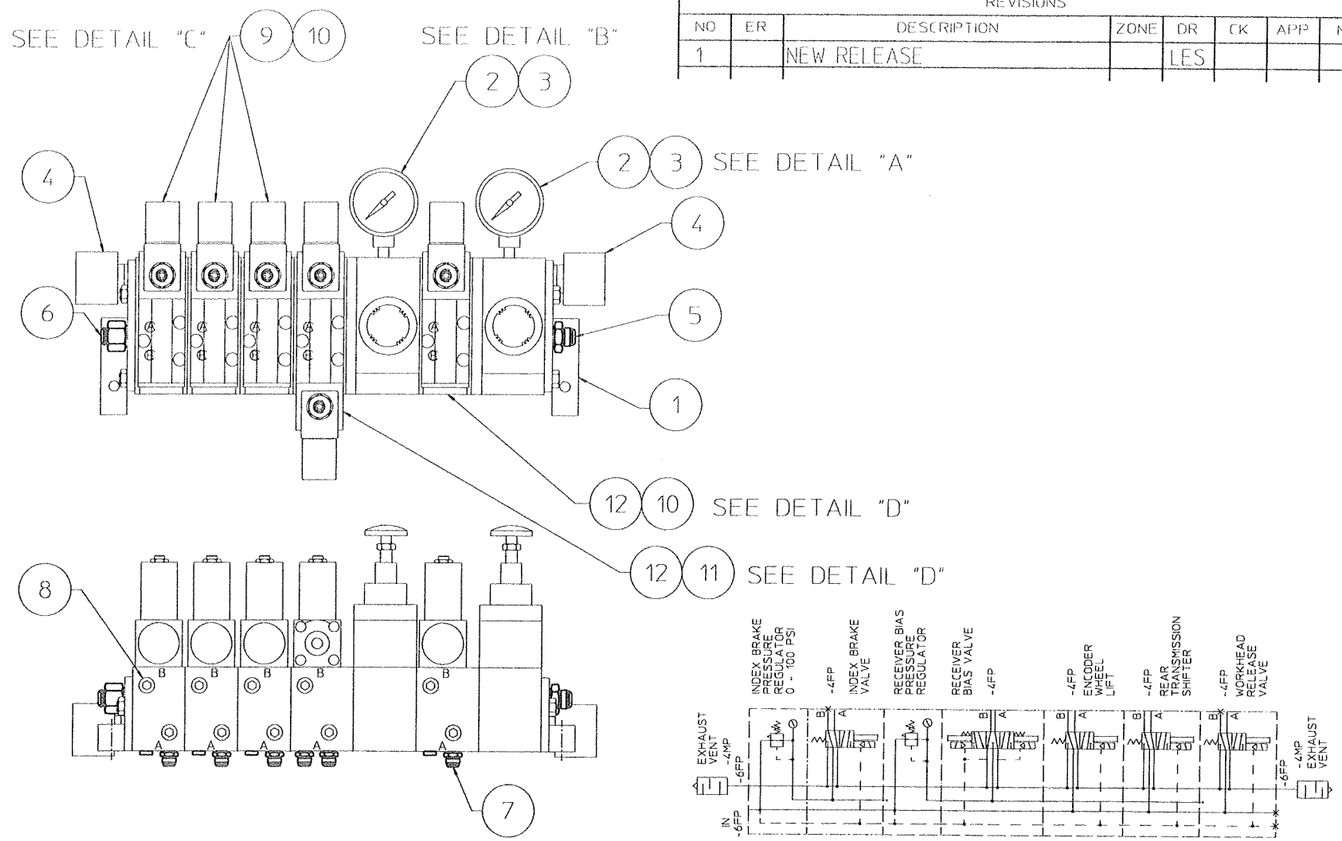

DETAIL "C"

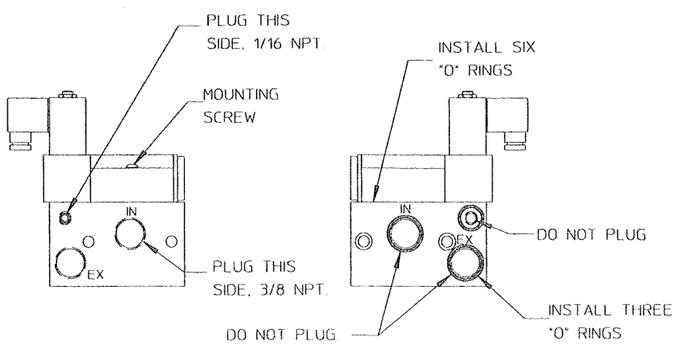

DETAIL "D"

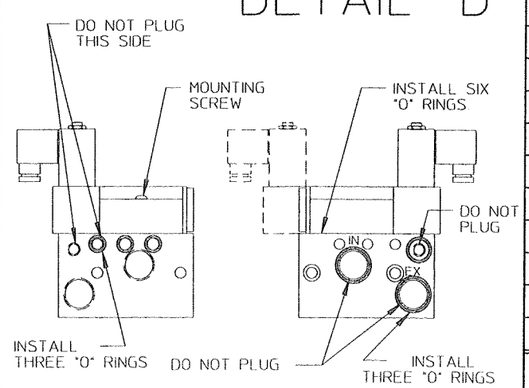

FIG NO.	ITEM NO.	PART NUMBER	DESCRIPTION AND MATERIAL SIZE (REF.ONLY)	QTY
	12	0-3401000-0-13	MANIFOLD	2
	11	D0393Y01	VALVE DBL. SOL. 28 VDC	1
	10	D0393Y03	VALVE SNGL. SOL. 28 VDC	4
	9	0-3401000-0-06	MANIFOLD	3
	8	0-3304118-0-11	PLUG HEX SOC. 1/4 NPT	12
	7	L411385	ADAPTER 1/4 MP - JIC	4
	6	A5443Y13	MALE CONNECTOR 3/8NPT-1/4TUBE	1
	5	L420114	ADAPTER 3/8 MP - JIC	1
	4	0-3350004-0-06	DUST EXCLUDER	2
	3	0-3413005-0-18	VALVE, PRESS. REGULATOR	2
	2	0-3401000-0-09	MANIFOLD, PRESS. REG.	2
	1	0-3401000-0-08	MOUNTING BRACKET	1

VALVE PARTS SEE D0391Y

IMPLIED TOLERANCES
ALL DIMENSIONS ARE IN INCHES-TOLERANCE UNLESS OTHERWISE SPECIFIED

NOMINAL SIZE RANGE		PLUS OR MINUS			NOMINAL SIZE RANGE		PLUS OR MINUS		
OVER	TO	FRACTION	2 PLACE DECIMAL	3 PLACE DECIMAL	OVER	TO	FRACTION	2 PLACE DECIMAL	3 PLACE DECIMAL
-	1	1/64	01	003	6	24	3/64	03	008
1	6	1/32	02	005	24	-	1/16	05	010

ANGULAR DIMENSIONS PLUS OR MINUS 1 DEGREE

√ ALL MACHINED SURFACES TO HAVE A SURFACE FINISH OF 125 MICROINCHES UNLESS OTHERWISE SPECIFIED.

WELDING SPECIFICATION

UNLESS OTHERWISE SPECIFIED ALL WELDS SHOULD ADHERE TO FAIRMONT TAMPER WELDING SPECIFICATION NO. 101

WEIGHT lbs.

3rd ANGLE PROJECTION

DO NOT SCALE

SHEET 1 CONT ON

DESCRIPTION (24
INDEX BRAKE VALVE ASSY

DRAWN	DATE	MACHINE TYPE
LES	12/22/97	MARK VI (STD)
CHECKED	DATE	
APP-ENG	DATE	
APP-MFG	DATE	
LAST ECR 10403 18	CHECKED dvgn DATE 27-Feb-98	ENG.DWG.NO C7786XAB

Fairmont Tamper™
2401 Edmund Road-Box 20
Cayce-West Columbia,
South Carolina 29171-0020
(803) 822-9160

THIS DOCUMENT CONTAINS PROPRIETARY INFORMATION AND SUCH INFORMATION MAY NOT BE DISCLOSED TO OTHERS FOR ANY PURPOSE OR USED FOR MANUFACTURING PURPOSES WITHOUT THE WRITTEN PERMISSION OF FAIRMONT TAMPER.

ENG.DWG.NO.
C7788XAA

REVISIONS							
NO	ER	DESCRIPTION	ZONE	DR	CK	APP	MF
1	5860237	NEW RELEASE		MLT	JGA	APD	
2	65831	ITEM 3 WAS 0-3413005-0-12 & ITEM 10 WAS 0-3413005-0-17		MLT	JGA	APD	
3	1171153	ITEM 6 P/N WAS L411387		LES	HWJ	AML	

DETAIL "A"

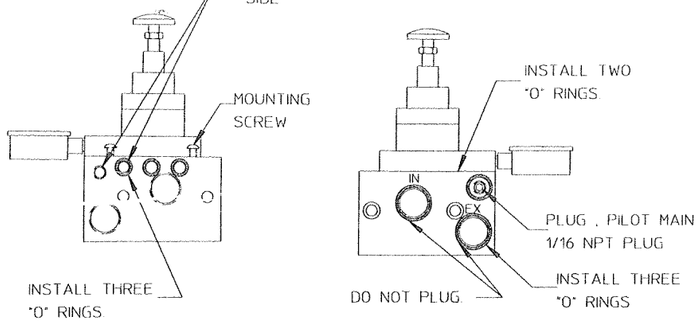

DETAIL "B"

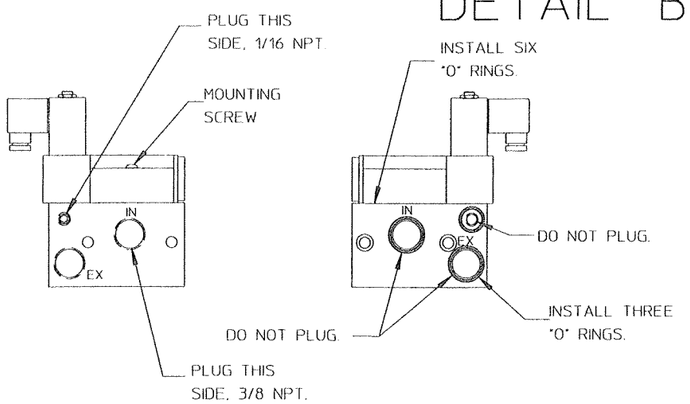

DETAIL "C"

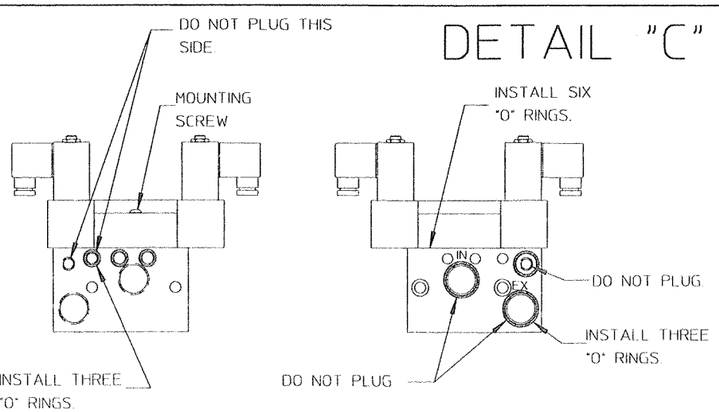

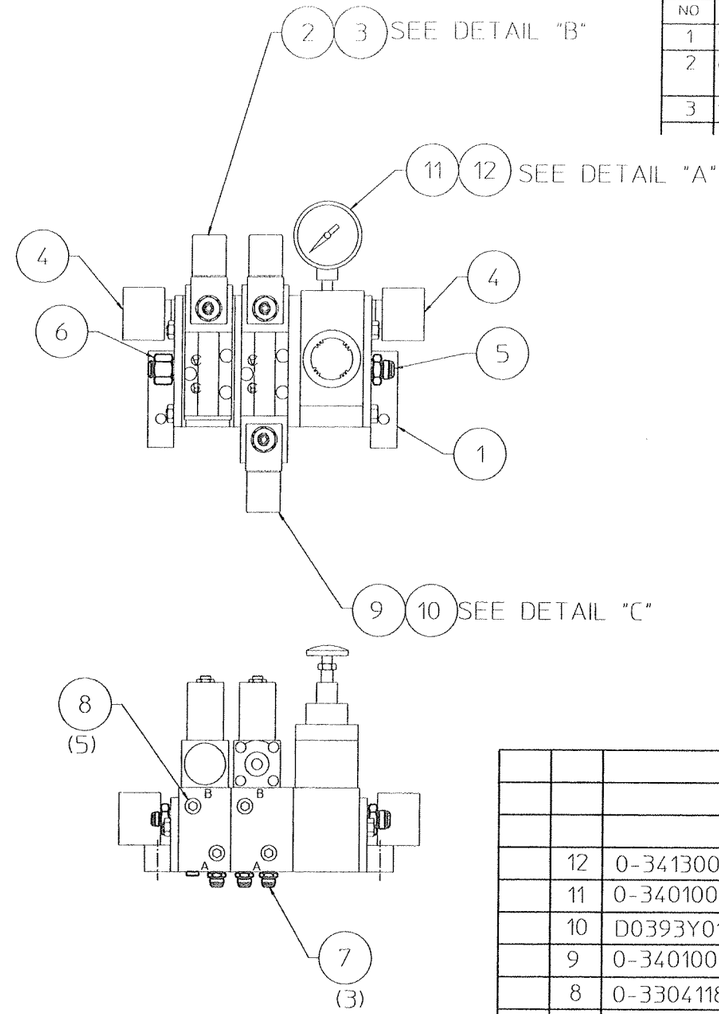

'L411387
'3/8 MP/ 1/4 JIC STR ADAPTER'
'AEROQUIP #2021-6-4S'

A5443Y13
PRESTOLOK FITTING MALE CONECTOR 1/4 TUBE SIZE - 3/8 NPTF PIPE THREAD'
PARKER P/N 68PL-4-6 *** CORONET P/N 768-4-6'

VALVE PARTS SEE D0391Y

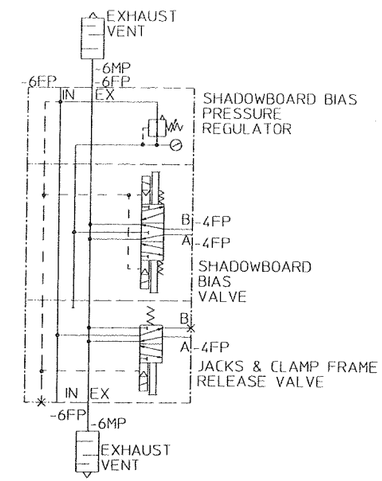

FIG NO.	ITEM NO.	PART NUMBER	DESCRIPTION AND MATERIAL SIZE (REF ONLY)	QTY
	12	0-3413005-0-18	PRESS REGULATOR VALVE	1
	11	0-3401000-0-09	MANIFOLD, PRESS. REG.	1
	10	D0393Y01	VALVE DBL. SOL. 28 VDC	1
	9	0-3401000-0-13	MANIFOLD	1
	8	0-3304118-0-11	PLUG HEX SOC. 1/4 NPT	5
	7	L411385	ADAPTER 1/4 MP - JIC	3
	6	A5443Y13	ADAPTER 3/8 MP - 1/4 PRESTOLOCK	1
	5	L420114	ADAPTER 3/8 MP - JIC	1
	4	0-3350004-0-06	DUST EXCLUDER	2
	3	D0393Y03	VALVE SOL. 28 VDC	1
	2	0-3401000-0-06	MANIFOLD	1
	1	0-3401000-0-08	MOUNTING BRACKET	1

IMPLIED TOLERANCES
ALL DIMENSIONS ARE IN INCHES-TOLERANCE UNLESS OTHERWISE SPECIFIED

NOMINAL SIZE RANGE		PLUS OR MINUS			NOMINAL SIZE RANGE		PLUS OR MINUS		
OVER	TO	FRACTION	2 PLACE DECIMAL	3 PLACE DECIMAL	OVER	TO	FRACTION	2 PLACE DECIMAL	3 PLACE DECIMAL
-	1	1/64	01	003	6	24	3/64	03	008
1	6	1/32	02	005	24	-	1/16	05	010

ANGULAR DIMENSIONS PLUS OR MINUS 1 DEGREE
ALL MACHINED SURFACES TO HAVE A SURFACE FINISH OF 125 MICROINCHES UNLESS OTHERWISE SPECIFIED

WELDING SPECIFICATION
UNLESS OTHERWISE SPECIFIED ALL WELDS SHOULD ADHERE TO FAIRMONT TAMPER WELDING SPECIFICATION NO. 101

WEIGHT lbs.
3rd ANGLE PROJECTION

DO NOT SCALE

SHEET 1 CONT ON —

DESCRIPTION (24
SHADOWBOARD VALVE ASSY

DRAWN MLT	DATE 8/25/92	MACHINE TYPE MARK IV	
CHECKED JGA	DATE 01/5/93		
APP-ENG APD	DATE 12/19/92		
APP-MFG	DATE		
LAST ECR 11711 53	CHECKED hwj	ENG.DWG.NO. C7788XAA	
	DATE 11-Sep-00		

Fairmont Tamper™
2401 Edmund Road-Box 20
Cayce-West Columbia,
South Carolina 29171-0020
(803) 822-9160

THIS DOCUMENT CONTAINS PROPRIETARY INFORMATION AND SUCH INFORMATION MAY NOT BE DISCLOSED TO OTHERS FOR ANY PURPOSE OR USED FOR MANUFACTURING PURPOSES WITHOUT THE WRITTEN PERMISSION OF FAIRMONT TAMPER

H3416XAA

REVISIONS							
NO	ER	DESCRIPTION	ZONE	DR	CK	APP	MF
1	12051	RELEASED					

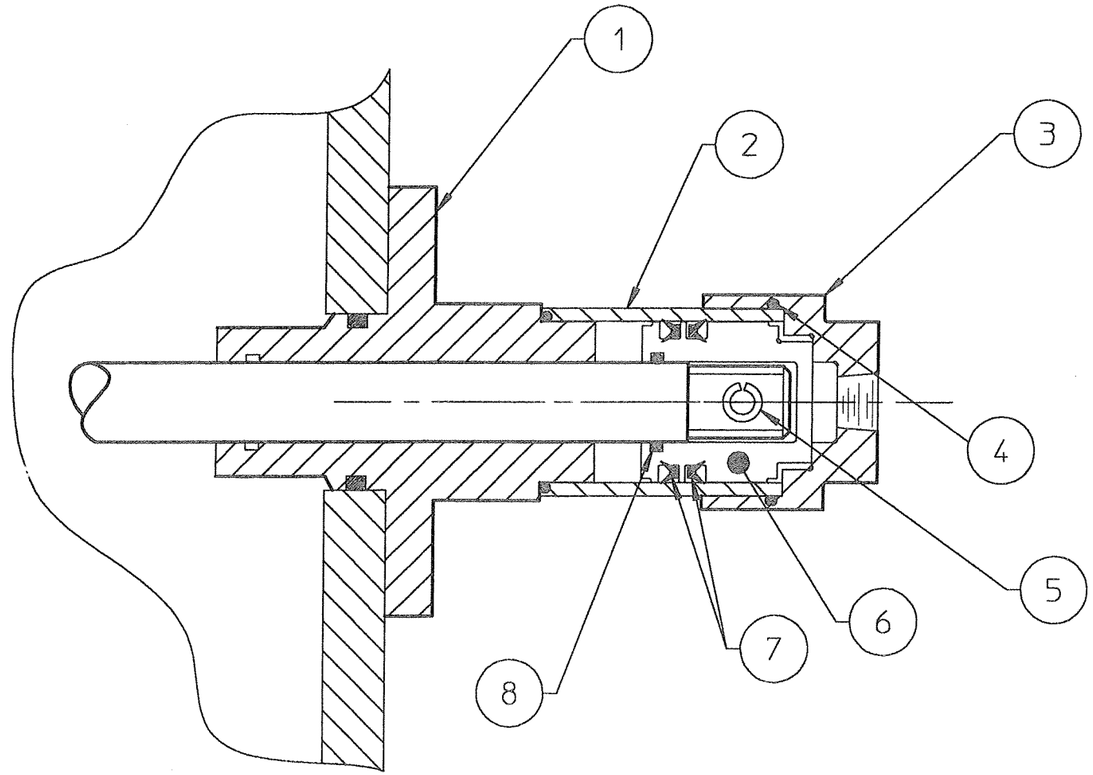

REMOVE AND DISCARD EXISTING SHIFTER HSG., REUSE BOLTS AND WASHERS ON NEW HSG (CYL BODY). DO NOT USE DETENT BALL & SPRING WITH NEW HSG.

PLOT SCALE 1

FIG NO.	ITEM NO.	PART NUMBER	DESCRIPTION AND MATERIAL SIZE (REF.ONLY)	QTY	
	8	L40140	"O"RING	1	
	7	H3415Y01	CUP SEAL	2	
	6	H3420Y01	PISTON	1	
	5	0-3015006-0-81	ROLL PIN 3/8 X 1 1/4	1	
	4	L411691	"O"RING	1	
	3	H3422Y01	CYL CAP REWORK	1	
	2	H3414Y02	CYL TUBE	1	
	1	H3414Y01	CYL BODY	1	

IMPLIED TOLERANCES
ALL DIMENSIONS ARE IN INCHES-TOLERANCE UNLESS OTHERWISE SPECIFIED

NOMINAL SIZE RANGE		PLUS OR MINUS			NOMINAL SIZE RANGE		PLUS OR MINUS		
OVER	TO	FRACTION	2 PLACE DECIMAL	3 PLACE DECIMAL	OVER	TO	FRACTION	2 PLACE DECIMAL	3 PLACE DECIMAL
-	1	1/64	.01	.003	6	24	3/64	.03	.008
1	6	1/32	.02	.005	24	-	1/16	.05	.010

ANGULAR DIMENSIONS PLUS OR MINUS 1 DEGREE

√ ALL MACHINED SURFACES TO HAVE A SURFACE FINISH OF 125 MICROINCHES UNLESS OTHERWISE SPECIFIED.

WELDING SPECIFICATION

UNLESS OTHERWISE SPECIFIED ALL WELDS SHOULD ADHERE TO FAIRMONT TAMPER WELDING SPECIFICATION NO. 101

WEIGHT lbs.

3rd ANGLE PROJECTION

DO NOT SCALE

SHEET 1 CONT. ON –

DESCRIPTION (24
AIR DISCONNECT INSTL

DRAWN A.OUZTS	DATE 19 SEP 00	MACHINE TYPE TAIWAN	
CHECKED HW	DATE 9/20/00		
APP-ENG AML	DATE 9/19/00		
APP-MFG	DATE		
LAST ECR. 12051 .147	CHECKED hwl	ENG.DWG.NO. H3416XAA	
	DATE 21-Sep-00		

Fairmont Tamper™
2401 Edmund Road-Box 20
Cayce-West Columbia,
South Carolina 29171-0020
(803) 622-9160

THIS DOCUMENT CONTAINS PROPRIETARY INFORMATION AND SUCH INFORMATION MAY NOT BE DISCLOSED TO OTHERS FOR ANY PURPOSE OR USED FOR MANUFACTURING PURPOSES WITHOUT THE WRITTEN PERMISSION OF FAIRMONT TAMPER.

ENG.DWG.NO.
C9785X15

REVISIONS							
NO	ER	DESCRIPTION	ZONE	DR	CK	APP	MF
1	12509	NEW RELEASE		JBR			
			X-X	XXX	XXX	XXX	

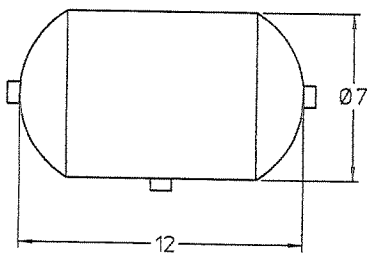

PURGE TANK

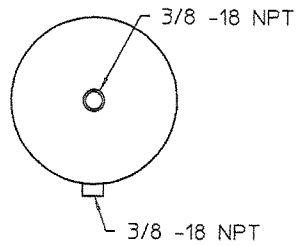

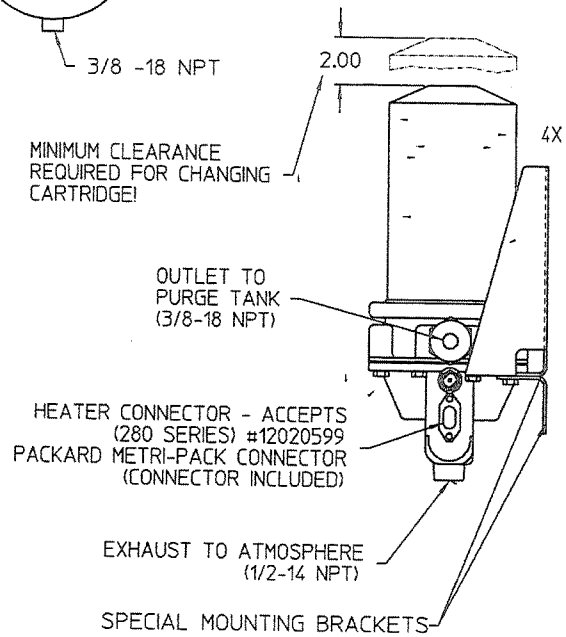

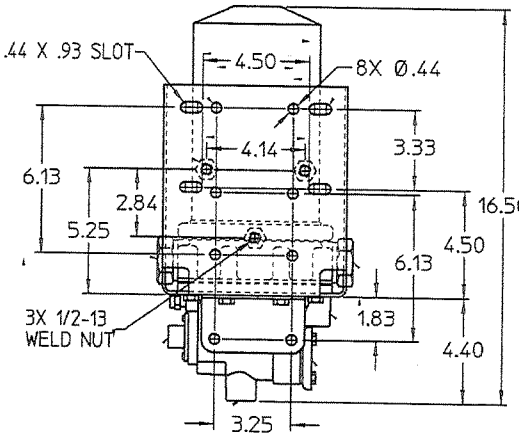

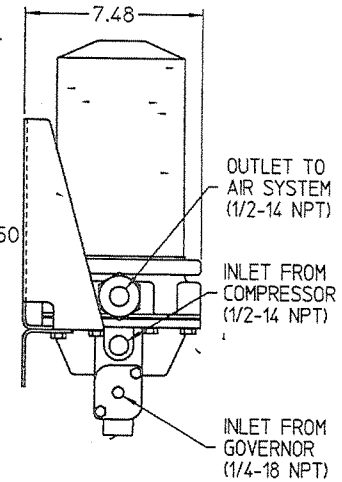

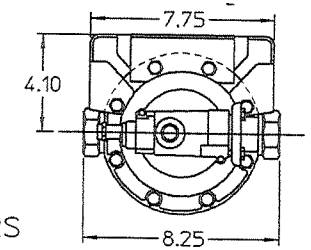

NOTE:
SEE C9785X03 THRU C9785X**
FOR REPLACEMENT PARTS.
DIMENSIONS FOR REFERENCE ONLY

SPECIFICATIONS
LENGTH: 16 1/4 "
WIDTH: 8 1/2 "
WEIGHT: 16.5 POUNDS
CAPACITY: 24 CFM
HEATER: 75 WATT 24 VOLT DC
SEALED THERMOSTATICALLY
CONTROLLED ASSEMBLY
DRYING METHOD: FOUR POUNDS
MOLECULER SIEVE DESICCANT
MOUNTING POSITION: VERTCAL
INLET / OUTLET PORTS: 1/2 INCH NPT
BLEED VALVE PORT: 3/8 INCH NPT
GOVERNOR PORT: 1/4 INCH NPT
TURBO VALVE: INTERNAL, AIR ACTUATED
STANDARD AIR DRYER; NON E-TYPE

PURGE TANK
LENTH: 12"
OUTSIDE DIAMETER: 7 1/4"
WEIGHT: 14 POUNDS
VOLUME: 460 CU. IN.
KIT CONTENTS: TANK, U-BOLTS,
HEATER WIRE HARNESS

SPECIAL NOTE:
THIS AIR DRYER IS COMPATIBLE WITH
ALL WABCO (CUMMINS) AIR COMPRESSORS

SPECIFICATIONS	VENDOR
TURBO 2000 AIR DRYER & PURGE TANK KIT *** STANDARD; NON E-TYPE AIR DRYER *** INCLUDES AIR DRYER WITH 24 VOLT HEATER & PURGE TANK WITH U-BOLTS	CHICAGO RAWHIDE PART NO. 620632 735 TOLLGATE ROAD, ELGIN, ILLINOIS 60123-9332 (1-800-882-0008)

IMPLIED TOLERANCES
ALL DIMENSIONS ARE IN INCHES-TOLERANCE UNLESS OTHERWISE SPECIFIED

NOMINAL SIZE RANGE		PLUS OR MINUS			NOMINAL SIZE RANGE		PLUS OR MINUS		
OVER	TO	FRACTION	2 PLACE DECIMAL	3 PLACE DECIMAL	OVER	TO	FRACTION	2 PLACE DECIMAL	3 PLACE DECIMAL
-	1	1/64	.01	.003	6	24	3/64	.03	.008
1	6	1/32	.02	.005	24	-	1/16	.05	.010

ANGULAR DIMENSIONS PLUS OR MINUS 1 DEGREE
ALL MACHINED SURFACES TO HAVE A SURFACE FINISH OF 125 MICRONCHES UNLESS OTHERWISE SPECIFIED.

WELDING SPECIFICATION
UNLESS OTHERWISE SPECIFIED ALL WELDS SHOULD ADHERE TO FAIRMONT TAMPER WELDING SPECIFICATION NO. 101
PLOT SCALE = -4

WEIGHT lbs.
3rd ANGLE PROJECTION
DO NOT SCALE
SHEET 1 CONT. ON –

DESCRIPTION (2.4)
AIR DRYER & PURGE TANK

DRAWN J Rowell	DATE 04/29/2002	MACHINE TYPE MARK IV	
CHECKED HW	DATE 04/30/2002		
APP-ENG A.Lindsey	DATE 04/29/2002		
APP-MFG	DATE		
LAST ECR. 12509 .5	CHECKED hwj	ENG.DWG.NO. C9785X15	
	DATE 1-May-02		

Fairmont Tamper™
2401 Edmund Road-Box 20
Cayce-West Columbia,
South Carolina 29171-0020
(803) 822-9160

THIS DOCUMENT CONTAINS PROPRIETARY INFORMATION AND SUCH INFORMATION MAY NOT BE DISCLOSED TO OTHERS FOR ANY PURPOSE OR USED FOR MANUFACTURING PURPOSES WITHOUT THE WRITTEN PERMISSION OF FAIRMONT TAMPER.

Electrical System and Components

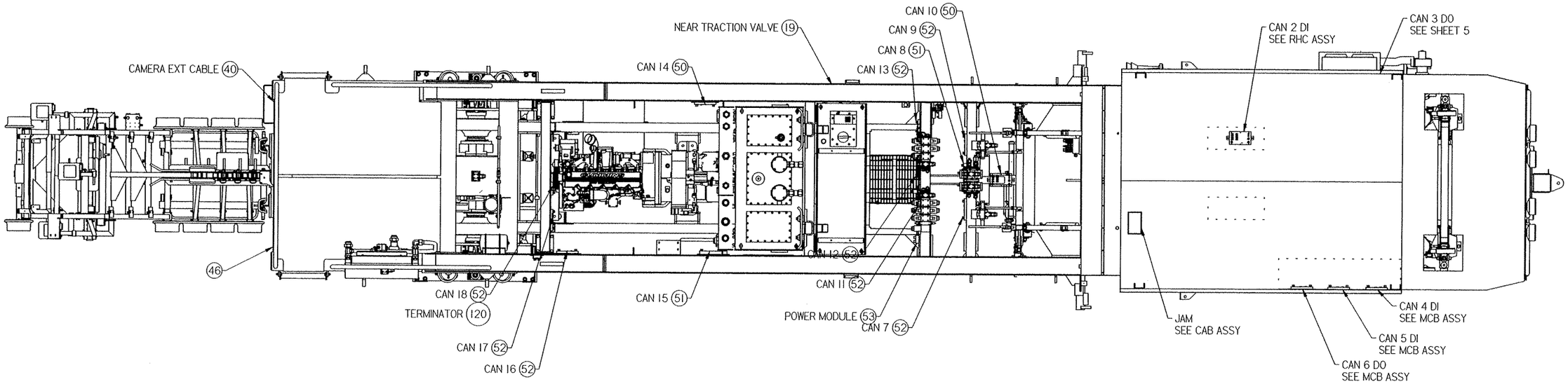

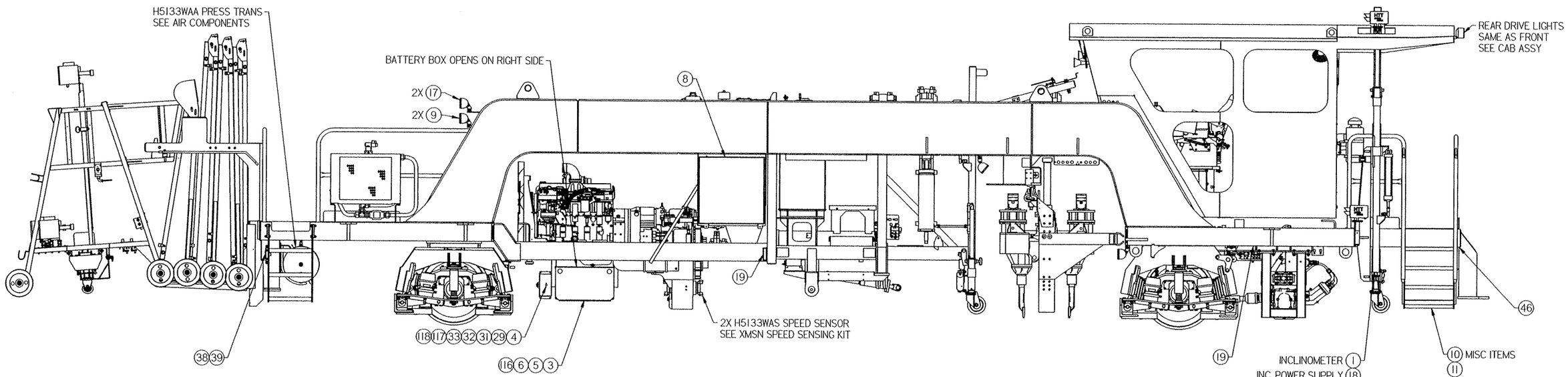

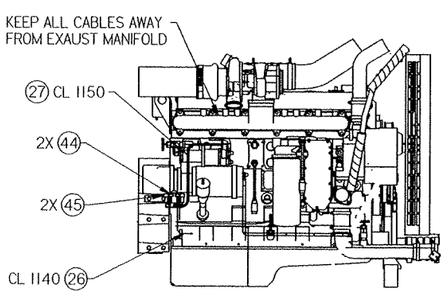

ENGINE WIRING (RIGHT SIDE)

SOLID EDGE DRAWING

CONFIDENTIAL
© COPYRIGHT 2001 HARSCO TRACK TECHNOLOGIES. THIS DRAWING OR DOCUMENT IS THE PROPERTY OF HARSCO TRACK TECHNOLOGIES AND EMBODIES CONFIDENTIAL INFORMATION, TRADE SECRET INFORMATION, AND/OR KNOW-HOW THAT IS THE PROPERTY OF HARSCO TRACK TECHNOLOGIES. BY ACCEPTING THIS DRAWING OR DOCUMENT, THE RECIPIENT AGREES (1) NOT TO PROVIDE, OR OTHERWISE MAKE AVAILABLE, THE DRAWING OR DOCUMENT, OR ANY INFORMATION OR KNOW-HOW EMBODIED THEREIN, TO ANY THIRD PARTY AND (2) NOT TO REPRODUCE OR USE THE DRAWING OR DOCUMENT TO MANUFACTURE ANY APPARATUS OR DEVICE, WITHOUT THE PRIOR WRITTEN AUTHORIZATION OF HARSCO TRACK TECHNOLOGIES.

IMPLIED TOLERANCES
ALL DIMENSIONS ARE IN INCHES - TOLERANCE UNLESS OTHERWISE SPECIFIED

INCH OVER	INCH TO	INCH PLUS OR MINUS 1 PLACE DECIMAL	INCH PLUS OR MINUS 3 PLACE DECIMAL	METRIC OVER	METRIC TO	METRIC PLUS OR MINUS 1 PLACE DECIMAL	METRIC PLUS OR MINUS 2 PLACE DECIMAL
0	6	.03	.005	0	150	.8	.13
6	24	.04	.008	150	600	1.0	.00
24	-	.06	.010	-	600	1.5	.25

UNLESS OTHERWISE SPECIFIED ALL MACHINED SURFACES WILL HAVE A SURFACE FINISH OF 125 MICROINCHES AND HAVE A TOLERANCE OF +.50' CONCENTRICITY WITHIN .010

THIRD ANGLE PROJECTION

UNLESS OTHERWISE SPECIFIED ALL WELDS SHOULD ADHERE TO THE LATEST HTT WELDING SPECIFICATION 101

CHANGE	R/L	REVISION	DATE
100967	A	NEW RELEASE	3/1/07
101081	B	ITEM 8 WAS H7274WAA	6/8/07
101213	C	ADDED DRAWING	7/26/07

Description: GENERAL ELECTRIC ASSEMBLY
Drawing Number: ----------
Machine Type: MARK VI
Model: 4013199.asm
Drawn: wgrier
Date Drawn: 3/1/07
Weight: 0.0 lbm
Scale: 1:4
APVD Dwg: JO'C
APVD Dtdrg: JO'C
Mat'l
Part Number: 4013199
Size: D
Sheet: 1 of 5

HTT
Harsco Track Technologies
Harsco
Columbia, SC

Plotted by jrowell on 8/20/2007 4013199.dft

MARK IV JUPITER CABLES

CAN 2 DIGITAL INPUT (RHC)

CABLE PART NUMBER	PORT	WIRE (CABLE) NUMBER	FUNCTION	ITEM NO.
H6339YAC	CAN 1 in	NCL1	NETWORK POWER CABLE FROM (ECP P-42 BD)	REF
414273	Field Power	CL302	CB0802 MCB	REF
TRANITION BOARD	C1	N/A	SPARE	N/A
TRANITION BOARD	C2	N/A	WARNING BUZZER RHC	N/A
TRANITION BOARD	C3	N/A	RIGHT W/H OUTER & RIGHT HOOK J/S (RHC)	N/A
TRANITION BOARD	C4	N/A	W/H CYCLE / TRAC. J/S (RHC)	N/A
TRANITION BOARD	C5	N/A	R/H CLAMP/SLEW SW- R/H WIZ. SW & E-STOP	N/A
TRANITION BOARD	C6	N/A	LEFT W/H OUTER & LEFT HOOK J/S (LHC)	N/A
TRANITION BOARD	C7	N/A	L/H CLAMP/SLEW, L/H WIZ., FLOOR CYCLE, HORN SWITCHES	N/A
TRANITION BOARD	C8	N/A	SPARE	N/A
TRANITION BOARD	C9 15 PIN D-SUB	N/A	KEYPAD (RHC)	N/A
TRANITION BOARD	C10 15 PIN D-SUB	N/A	KEYPAD (LHC)	N/A

CAN 3 DIGITAL OUTPUT

414278	CAN 1 in	NET2-3	FROM CAN 2	97
414273	Field Power	CL303	CB0803 MCB	93
414270	C1	010070	WH LOCK RELEASE	79
414270	C2	020071	RECEIVER BIAS LEFT	79
414270	C3	030072	RECEIVER BIAS RIGHT	79
414270	C4	040073	REAR XMSN SHIFTER	79
415902	C5	050074	AIR HORN VALVE	73
414270	C6	060075	ENCODER DOWN	79
414266	C7	070076	REAR LOCKOUTS OUT	64
414266	C8	080077	REAR LOCKOUTS IN	64

CAN 4 DIGITAL INPUT (MCB)

414274	CAN 1 in	NET3-4	FROM CAN 3	94
414273	Field Power	CL303	CB0804 MCB	93
200753	C1	010078	RIGHT DOUBLE BARREL RECEIVER	106
200753	C2	020079	LEFT DOUBLE BARREL RECEIVER	106
200753	C3	030080	RIGHT LINER DOUBLE BARREL RECEIVER	106
200753	C4	040081	LEFT LINER DOUBLE BARREL RECEIVER	106
414264	C5	05A0082	SPRING BRAKE PRESS SW (APPLIED WARNING)	61
414263	C6	060083	DISTANCE ENCODER	60
414265	C7	070084	REAR MOTION ALARM	62
414263	C8	080085	REAR TRANSMISSION SW	60

CAN 5 DIGITAL INPUT (MCB)

414276	CAN 1 in	NET4-5	FROM CAN 4	95
REF 4010163	Field Power	CL305	CB0805 MCB	REF
REF 4010163	C1	010094	H-BRIDGE DRIVER #1 IN1	REF
REF 4010163	C2	020095	H-BRIDGE DRIVER #1 IN2	REF
REF 4010163	C3	030096	LH SURFACE ACTUATOR EXTEND	REF
REF 4010163	C4	040097	LH SURFACE ACTUATOR RETRACT	REF
REF 4010163	C5	050098	RH LINER ACTUATOR EXTEND	REF
REF 4010163	C6	060099	RH LINER ACTUATOR RETRACT	REF
REF 4010163	C7	070100	LH LINER ACTUATOR EXTEND	REF
REF 4010163	C8	080101	LH LINER ACTUATOR RETRACT	REF

CAN 6 DIGITAL OUTPUT(MCB)

CABLE PART NUMBER	PORT	WIRE (CABLE) NUMBER	FUNCTION	ITEM NO.
414274	CAN 1 in	NET5-6	FROM CAN 5	REF
REF 4010163	Field Power	CL306	CB0806 MCB	REF
REF 4010163	C1	010102	LASER POWER RELAY	REF
REF 4010163	C2	020103	LINING PROJECTOR RELAY	REF
REF 4010163	C3	030104	SURFACE PROJECTOR RELAY	REF
REF 4010163	C4	040105	LEFT SURF. INDICATOR LT UNDER KEYBOARD	REF
REF 4010163	C5	050106	LINER INDICATOR LT UNDER KEYBOARD	REF
REF 4010163	C6	060107	RIGHT INDICATOR LT UNDER KEYBOARD	REF
415264/415265	C7	070108	SAFETY BOX #1/REAR TRACT VAL REVERSE	61/63
415264/415265	C8	080109	SAFETY BOX #1/REAR TRACT VAL FORWARD	61/63

CAN 7 DIGITAL OUTPUT

414277	CAN 1 in	NET6-7	FROM CAN 6	96
414273	Field Power	CL307	CB0807 PDB	93
415265	C1	010110	RIGHT W/H VALVE SQUEEZE IN	63
415265	C2	020111	RIGHT W/H VALVE SQUEEZE OUT	63
414266	C3	030112	RIGHT W/H VALVE UPFEED	64
414266	C4	040113	RIGHT W/H VALVE DOWNFEED	64
415265	C5	050114	LEFT W/H VALVE SQUEEZE IN	63
415265	C6	060115	LEFT W/H VALVE SQUEEZE OUT	63
414266	C7	070116	LEFT W/H VALVE UPFEED	64
414266	C8	080117	LEFT W/H VALVE DOWNFEED	64

CAN 8 ANALOG INPUT

414274	CAN 1 in	NET7-8	FROM CAN 7	94
414273	Field Power	CL308	CB0808 PDB	93
415904	C1	010118	RIGHT WORKHEAD STRING POT	75
414281	C2	020119	LEFT WORKHEAD STRING POT	107
414281	C3	030120	ACTUATOR LINING LEFT HAND	107
415904	C4	040121	ACTUATOR SURFACE RIGHT HAND	75
415904	C5	050122	ACTUATOR SURFACE LEFT HAND	75
414282	C6	060123	INCLINOMETER	108
415904	C7	070124	ACTUATOR LINING RIGHT HAND	75
414280	C8	080125	WORKHEAD SQUEEZE PRESS TRANSDUCER	90

CAN 9 DIGITAL OUTPUT

414274	CAN 1 in	NET8-9	FROM CAN 8	94
414273	Field Power	CL309	CB0809 PDB	93
414266	C1	010126	LEFT W/H TRAVERSE OUT	64
414266	C2	020127	LEFT W/H TRAVERSE IN	64
414266	C3	030128	RIGHT W/H TRAVERSE OUT	64
414266	C4	040129	RIGHT W/H TRAVERSE IN	64
414268	C5	050130	RIGHTHAND JACK UP	66
414268	C6	060131	RIGHTHAND JACK DOWN	66
414268	C7	070132	LEFTHAND JACK UP	66
414268	C8	080133	LEFTHAND JACK DOWN	66

CAN 10 DIGITAL INPUT

414278	CAN 1 in	NET9-10	FROM CAN 9	97
414273	Field Power	CL310	CB0810 PDB	93
SPARE	C1	010134	SPARE	N/A
SPARE	C2	020135	SPARE	N/A
414261	C3	030136	COMBO CLAMP	57
414261	C4	040137	COMBO CLAMP	57
414261	C5	050138	COMBO CLAMP	57
SPARE	C6	060139	SPARE	N/A
SPARE	C7	070140	SPARE	N/A
SPARE	C8	080141	SPARE	N/A

POWER TEE

CABLE PART NUMBER	PORT	WIRE (CABLE) NUMBER	FUNCTION	ITEM NO.
414276	CAN 1 in	NET11-PW-T	FROM CAN 10	95
414273	Field Power	CL311A	CB0702 PDB	93

CAN 11 DIGITAL OUTPUT

414274	CAN 1 in	NETPW-T-11	FROM POWER TEE	94
414273	Field Power	CL311	CB0811 PDB	93
415265	C1	010142	LEFT HOOK IN	63
415265	C2	020143	LEFT HOOK OUT	63
415265	C3	030144	LEFT HOOK IN W-REGEN	63
415265	C4	040145	LEFT HOOK OUT W-REGEN	63
415265	C5	050146	LEFT SLEW REVERSE	63
415265	C6	060147	LEFT SLEW FORWARD	63
415265	C7	070148	LINER FLOAT	63
414266	C8	080149	REAR AXLE DECEL PRESSURE	64

CAN 12 DIGITAL OUTPUT

414274	CAN 1 in	NET11-12	FROM CAN 11	94
414273	Field Power	CL312	CB0812 PDB	93
414266	C1	010150	LINE LEFT	64
414266	C2	020151	LINE RIGHT	64
414270	C3	030152	CLAMP LOCKUP RELEASE	79
414266	C4	040153	LEFT VIBRATOR ON	64
415903	C5	050154	INDEX BRAKE	121
414267	C6	060155	FRONT AXLE DECEL PRESSURE	65
414270	C7	070156	SHADOWBOARD BIAS LEFT	79
414270	C8	080157	SHADOWBOARD BIAS RIGHT	79

CAN 13 DIGITAL OUTPUT

414274	CAN 1 in	NET12-13	FROM CAN 12	94
414273	Field Power	CL313	CB0813 PDB	93
414266	C1	010158	RIGHT VIBRATOR ON	64
415265	C2	020159	RIGHT HOOK IN	63
415265	C3	030160	RIGHT HOOK OUT	63
415265	C4	040161	RIGHT HOOK IN W-REGEN	63
415265	C5	050162	RIGHT HOOK OUT W-REGEN	63
415265	C6	060163	CLAMP BIAS ON	63
415265	C7	070164	RIGHT SLEW REVERSE	63
415265	C8	080165	RIGHT SLEW FORWARD	63

CAN 14 DIGITAL INPUT

414276	CAN 1 in	NET13-14	FROM CAN 13	95
414273	Field Power	CL314	CB0814 PDB	93
415905	C1	010166	MANUAL PUMP	68
414264	C2	020167	HYD OIL TEMP 180 DEG/70 DEG	61
414265	C3	030168	HYD OIL COOLER TEMP SW	62
414265	C4	040169	ALTERNATOR TACH	62
415264/414260	C5	050170	FEED CABLE & SPLITTER	122/54
415263	C5A	05A0170	FRONT TRANSMISSION OUTPUT SPEED	110
415263	C5B	05B0170	FRONT TRANSMISSION OUTPUT SPEED	110
414265/414264	C6	060171	PDB H-BRIDGE DRIVER #3/ ENG THROTTLE ACT	62/61
414265	C7	070172	PDB H-BRIDGE DRIVER #3	62
415264/414260	C8	080173	FEED CABLE & SPLITTER	122/54
414264	C8A	08A0173	FRT TRACT DISCONNECT LT SW (ENGAGE)	61
414264	C8B	08B0173	FRT TRACT DISCONNECT LT SW (DISENGAGE)	61

CAN 15 ANALOG INPUT

414276	CAN 1 in	NET14-15	FROM CAN 14	95
414272	Field Power	CL315	CB0815 PDB	92
414282	C1	010174	WATER TEMP	108
414282	C2	020175	TRANSMISSION TEMP SENDER	108
415904	C3	030176	FUEL LEVEL	75
4008375	C4	040177	LEFT CLAMP PRESS TRANSDUCER	78
414281	C5	050178	ENG OIL PRESS	107
415904	C6	060179	AIR PRESS	75
414282	C7	070180	TRANSMISSION OIL PRESS	108
4008375	C8	080181	RIGHT CLAMP PRESS TRANSDUCER	78

CAN 16 DIGITAL OUTPUT

2006482	CAN 1 in	NET15-16	FROM CAN 15	109
414273	Field Power	CL316	CB0816 PDB	93
415902	C1	010182	P1 PUMP 2750 PSI	73
415902	C2	020183	P1 PUMP 1850 PSI	73
414268	C3	030184	P2 PUMP 2060 PSI	66
414268	C4	040185	P2 PUMP 1850 PSI	66
SPARE	C5	050186	SPARE	
414271	C6	060187	TRANSMISSION DISCONNECT FOR TOWING	91
415902	C7	070188	TRANS. DISCONNECT SPLINE ALINEMENT VALVE	73
415902	C8	080189	WARMUP	73

CANS 17 & 18 ON SHEET 3

NOTE:
1. CABLES MARKED AS REFERENCE ARE DOCUMENTED ELSEWHERE AND ARE NOT PART OF THIS ASSEMLBY.
2. SEE SHEET #1 FOR LOCATION OF JUPITER MODULES.
3. LABEL ALL CABLES BOTH ENDS.

CONFIDENTIAL
© COPYRIGHT 2001 HARSCO TRACK TECHNOLOGIES. THIS DRAWING OR DOCUMENT IS THE PROPERTY OF HARSCO TRACK TECHNOLOGIES AND EMBODIES CONFIDENTIAL INFORMATION, TRADE SECRET INFORMATION, AND/OR KNOW-HOW THAT IS THE PROPERTY OF HARSCO TRACK TECHNOLOGIES. BY ACCEPTING THIS DRAWING OR DOCUMENT, THE RECIPIENT AGREES (1) NOT TO PROVIDE, OR OTHERWISE MAKE AVAILABLE, THE DRAWING OR DOCUMENT, OR ANY INFORMATION OR KNOW-HOW EMBODIED THEREIN, TO ANY THIRD PARTY AND (2) NOT TO REPRODUCE OR USE THE DRAWING OR DOCUMENT TO MANUFACTURE ANY APPARATUS OR DEVICE, WITHOUT THE PRIOR WRITTEN AUTHORIZATION OF HARSCO TRACK TECHNOLOGIES.

SOLID EDGE DRAWING

IMPLIED TOLERANCES
ALL DIMENSIONS ARE IN INCHES - TOLERANCE UNLESS OTHERWISE SPECIFIED

NATIONAL SIZE RANGE		INCH PLUS OR MINUS		NATIONAL SIZE RANGE		METRIC PLUS OR MINUS	
OVER	TO	3 PLACE DECIMAL	2 PLACE DECIMAL	OVER	TO	1 PLACE DECIMAL	2 PLACE DECIMAL
0	6	.03	.005	0	150	.8	.13
6	24	.04	.008	150	600	1.0	.20
24	-	.06	.010	-	600	1.5	.25

UNLESS OTHERWISE SPECIFIED ALL MACHINED SURFACES WILL HAVE:
A SURFACE FINISH OF 125 MICROINCHES
ANGULAR TOLERANCE OF ± 30'
CONCENTRICITY WITHIN .010

THIRD ANGLE PROJECTION

UNLESS OTHERWISE SPECIFIED ALL WELDS SHOULD ADHERE TO THE LATEST HTT WELDING SPECIFICATION 101

CHANGE	R/L	REVISION	DATE
100967	A	NEW RELEASE	3/11/07
101081	B	ITEM 8 WAS H7274WAA	6/8/07
101213	C	ADDED DRAWING	7/26/07

Description: GENERAL ELECTRIC ASSEMBLY
Drawing Number: ----------
Machine Type: MARK VI
Model: 4013199.asm
Drawn: wgrier Date Drawn: 3/1/07
Weight: 0.0 lbm Scale: 1:4 APVD Eng: JO'C APVD Dfrtg: JO'C
Mat'l

HTT Harsco Track Technologies
Harsco Columbia, SC

Part Number: 4013199 Size: D Sheet: 2 of 5

Plotted by jrowell on 8/20/2007 4013199.dft

CANS CONTINUED FROM SHEET 2

CABLE PART NUMBER	PORT	WIRE (CABLE) NUMBER	FUNCTION	ITEM NO.

CAN 17 DIGITAL OUTPUT

414274	CAN 1 in	NET16-17	FROM CAN 16	94
414273	Field Power	CL317	CB0902 PDB	93
414264	C1	010190	AIR DRYER	61
414263/4011156	C2	020191	CLARK SHIFT CONTROL COIL 1	60/114
414263/4011156	C3	030192	CLARK SHIFT CONTROL COIL 2	60/114
414263/4011156	C4	040193	CLARK SHIFT CONTROL COIL 3	60/114
414263/4011156	C5	050194	SAFETY BOX #2/CLARK SHIFT FORWARD	60/114
414263/4011156	C6	060195	SAFETY BOX #2/CLARK SHIFT REVERSE	60/114
415263/414271	C7	070196	SPLINE ENGAGE VALVE	61/91
SPARE	C8	080197	SPARE	N/A

CAN 18 DIGITAL OUTPUT

414274	CAN 1 in	NET17-18	FROM CAN 17	94
414273	Field Power	CL318	CB0903 PDB	93
SPARE	C1	010198	SPARE	N/A
SPARE	C2	020199	SPARE	N/A
414268	C3	030200	HYD OIL COOLER FAN CONTROL VALVE	66
415905/414265	C4	040201	SAFETY BOX#3/FRT AXLE TRACT CONTROL FOR	68/62
415905/414265	C5	050202	SAFETY BOX#3/FRT AXLE TRACT CONTROL REV	68/62
414268	C6	060203	RIGHT PIVOT LOCKOUT FLOAT	66
414267	C7	070204	FRONT SUSPENSION LOCKOUT	65
414267	C8	080205	LEFT PIVOT LOCKOUT FLOAT	65

CABLE CONSTRUCTION CHART

		START OR BOX END			DEVICE END			CABLE	
CABLE NO.	WIRE NOS.	FROM	ITEM(QTY)	OUTER INSL STRIP (INCHES)	TO	ITEM(QTY)	OUTER INSL STRIP (INCHES)	ITEM (QTY) (FEET)	CABLE P/N
CL76	0214,0215,0216,000, SP1	MCB	N/A	60	PROJ. BUGGY JUNC. BOX	85 (1)	6	80 (62)	H7273WAACL76
CL1139	0102	BATTERY SWITCH	83 (1) 45 (1)	N/A	BATTERY	116 (1)	N/A	82 (6) 86 (8)	4013199CL1139
CL1130	0103	STARTER	83 (1) 45 (1)	N/A	ALTERNATOR	83 (1) 45 (1)	N/A	82 (9) 86 (8)	4013199CL1130

NOTES:

1) GE WIRING: SEE SCHEMATIC 4013198 & CABLE DIAGRAM 4013481.
2) MARK WIRES WITH NUMBERS SHOWN ON CHART.
3) MARK CABLES WITH CABLE NUMBER ON BOTH ENDS.
4) WHEN ORDERING REPLACEMENT CABLE, USE THE CABLE PART NUMBER. FOR EXAMPLE, TO ORDER CL76, USE PART NUMBER 4013199CL76.

CONFIDENTIAL
© COPYRIGHT 2001 HARSCO TRACK TECHNOLOGIES. THIS DRAWING OR DOCUMENT IS THE PROPERTY OF HARSCO TRACK TECHNOLOGIES AND EMBODIES CONFIDENTIAL INFORMATION, TRADE SECRET INFORMATION, AND/OR KNOW-HOW THAT IS THE PROPERTY OF HARSCO TRACK TECHNOLOGIES. BY ACCEPTING THIS DRAWING OR DOCUMENT, THE RECIPIENT AGREES (1) NOT TO PROVIDE, OR OTHERWISE MAKE AVAILABLE, THE DRAWING OR DOCUMENT, OR ANY INFORMATION OR KNOW-HOW EMBODIED THEREIN, TO ANY THIRD PARTY AND (2) NOT TO REPRODUCE OR USE THE DRAWING OR DOCUMENT TO MANUFACTURE ANY APPARATUS OR DEVICE, WITHOUT THE PRIOR WRITTEN AUTHORIZATION OF HARSCO TRACK TECHNOLOGIES.

SOLID EDGE DRAWING

IMPLIED TOLERANCES
ALL DIMENSIONS ARE IN INCHES - TOLERANCE UNLESS OTHERWISE SPECIFIED

NOMINAL SIZE RANGE		INCH PLUS OR MINUS		NOMINAL SIZE RANGE		METRIC PLUS OR MINUS	
OVER	TO	2 PLACE DECIMAL	3 PLACE DECIMAL	OVER	TO	1 PLACE DECIMAL	2 PLACE DECIMAL
0	6	.03	.005	0	150	.8	.13
6	24	.04	.008	150	600	1.0	.20
24	-	.05	.010	-	600	1.5	.25

UNLESS OTHERWISE SPECIFIED ALL MACHINED SURFACES WILL HAVE:
A SURFACE FINISH OF 125 MICROINCHES
ANGULAR TOLERANCE OF ± .50°
CONCENTRICITY WITHIN .010

THIRD ANGLE PROJECTION

UNLESS OTHERWISE SPECIFIED ALL WELDS SHOULD ADHERE TO THE LATEST HTT WELDING SPECIFICATION (S)

CHANGE	R/L	REVISION	DATE
100967	A	NEW RELEASE	3/1/07
101081	B	ITEM 8 WAS H7274WAA	6/8/07
101213	C	ADDED DRAWING	7/26/07

Description: GENERAL ELECTRIC ASSEMBLY
Drawing Number: ----------
Machine Type: MARK VI
Model: 4013199.asm
Drawn: wgrier
Date Drawn: 3/1/07
Weight: 0.0 lbm
Scale: 1:4
APVD Dwg: JO'C
APVD Chkg: JO'C
Mat'l

HTT
Harsco Track Technologies
Harsco
Columbia, SC

Part Number: 4013199
Size: D
Sheet: 3 of 5

Plotted by jrowell on 8/20/2007 4013199.dft

ITEM	PART NUMBER	DESCRIPTION	QTY
1	0-3150005-0-01	INCLINOMETER	1
3	L40845	BATTERY 151125-1	2
4	0-3180004-0-04	BATTERY SWITCH	1
5	F020433	CHASE NIPPLE	1
6	L41168	LOCKNUT, T.B.	1
7	L40829	BUSHING CONDUIT REDUCING	1
8	4013837	PDB ASSEMBLY	1
9	A2197Y05	HEADLIGHT-24V	2
10	A0055009	1/4-20 HEX NUTS	6
11	A0061008	1/4 MED LOK WSHR	6
12	A0036006	1/4-20 X11/4 HHCAPSCREW USE	6
13	A2197Y06	LAMP ASS'Y	4
17	A2197Y09	MARINE SPOT LIGHT ASSY	2
18	H5133WAV	M12 INCL & RECP COND	1
19	H5568XAA	SAFETY INTERRUPT MODULE	3
26	A2908YAA	CABLE CL1140	2
27	C8457XAA	CL1150	1
29	A6417YAA	CABLE CL1180	1
31	A2901YAC	CABLE CL1137	1
32	A2899YAC	CABLE CL1135	1
33	A2898YAC	CABLE CL1134	1
34	A1278Y10	STRAIN RELIEF	4
35	C8434T05	TWO HOLE BRKT	1
38	L40840	COVER FITTING BOX	1
39	C8865X03	RECEPTACLE BOX	1
40	D2044Y12	CABLE CAMERA EXTENSION	1
44	D6443Y03	TERMINAL INSULATOR CAP	2
45	D6443Y04	TERMINAL INSULATOR CAP	3
46	0-3106004-0-01	BACK-UP ALARM	2
47	L41497	CONDUIT FITTING COVER	1
50	H2967Y01	JUPITER DIGITAL INPUT, PROGRAM	2
51	H2967Y02	JUPITER ANALOG INPUT, PROGRAMM	2

ITEM	PART NUMBER	DESCRIPTION	QTY
52	H2967Y03	JUPITER OUTPUT MODULE, PROGRAM	9
53	414752	POWER DISTRIBUTION MODULE	1
54	414260	CONNECTOR M12 "T"	2
55	0-3224019-0-01	CONDULET	1
56	L41498	GASKET, CONDUIT FITTING	1
57	414261	CABLE ASSEMBLY M12 M/F 2 METER	2
59	414262	CABLE ASSEMBLY M12 M/F 4 METER	4
60	414263	CABLE ASSEMBLY M12 M/F 6 ME	6
61	414264	CABLE ASSEMBLY M12 M/PIG 4 MET	7
62	414265	CABLE ASSEMBLY M12 M/PIG 8 MET	8
63	415265	CABLE ASSEMBLY, M12, M DIN A,	18
64	414266	CABLE ASSEMBLY M12 M/DIN A 2 M	12
65	414267	CABLE ASSEMBLY M12 M/DIN A 3 M	3
66	414268	CABLE ASSEMBLY M12 M/DIN A 5 M	8
68	415905	CABLE ASSEMBLY M12 M/F 10 METE	3
69	A7199T68	ANGLE BRKT	1
73	415902	CABLE ASSEMBLY M12 M/DIN A 10	5
75	415904	CABLE ASSEMBLY, M12 M/F 10 MET	6
78	4008375	CABLE ASSY M12 - DIN SHIELDED	2
79	414270	CABLE ASSEMBLY M12 M/DIN I 3 M	8
80	0-3212004-0-47	CABLE 10/5 CARROL SOOW (FT)	62
81	L411089	CABLE 16/2 TYPE SO (FT)	20
82	0-3211009-0-18	CABLE, 2/0 (FT)	15
83	0-3250001-0-78	RING TERMINAL 2/0 AWG	3
85	A1278Y15	90 DEG STRAIN RELIEF	1
86	B1623Y04	3/4 C0RG. CONDUIT (FT)	20
90	414280	CABLE ASSEMBLY M12 M/F 3 METER	1
91	414271	CABLE ASSEMBLY, M12, M/DIN I,	2
92	414272	CABLE ASSEMBLY, M23-M, PIG, 5	1
93	414273	CABLE ASSEMBLY, M23-M, PIG, 10	14
94	414274	CABLE ASSEMBLY,M23-M/F 0.7 MET	8
95	414276	CABLE ASSEMBLY, M23-M/F 3 METE	4
96	414277	CABLE ASSEMBLY, M23-M/F 5 METE	1

ITEM	PART NUMBER	DESCRIPTION	QTY
97	414278	CABLE ASSEMBLY, M23-M/F 7 METE	2
103			
106	200753	CABLE ASSY, M12, M/PIG, 10 MET	4
107	414281	CABLE ASSEMBLY M12 M/F 5 METER	3
108	414282	CABLE ASSEMBLY	4
109	2006482	NETWORK CABLE 2.0M	1
110	415263	CABLE ASSEMBLY, M12, M F, 1 ME	2
111			
114	4011156	CABLE, M12-M /2 PIN-M	5
116	L422458	POSITIVE R/ANGLE BATT TE	1
117	G7719Y01	BACK PLATE	1
118	D4486Y14	NAMEPLATE-BATTERY SWITCH	1
119	H6204YAA	MANUAL PUMP BOX ASSY	1
120	414751	CONNECTOR TERMINATING	1
121	415903	CABLE ASSY, M12, M/DIN, I 10 MET	1
122	415264	CABLE ASSY M12, M/F, 3 METER	2

CONFIDENTIAL
© COPYRIGHT 2001 HARSCO TRACK TECHNOLOGIES. THIS DRAWING OR DOCUMENT IS THE PROPERTY OF HARSCO TRACK TECHNOLOGIES AND EMBODIES CONFIDENTIAL INFORMATION, TRADE SECRET INFORMATION, AND/OR KNOW-HOW THAT IS THE PROPERTY OF HARSCO TRACK TECHNOLOGIES. BY ACCEPTING THIS DRAWING OR DOCUMENT, THE RECIPIENT AGREES (1) NOT TO PROVIDE, OR OTHERWISE MAKE AVAILABLE, THE DRAWING OR DOCUMENT, OR ANY INFORMATION OR KNOW-HOW EMBODIED THEREIN, TO ANY THIRD PARTY AND (2) NOT TO REPRODUCE OR USE THE DRAWING OR DOCUMENT TO MANUFACTURE ANY APPARATUS OR DEVICE, WITHOUT THE PRIOR WRITTEN AUTHORIZATION OF HARSCO TRACK TECHNOLOGIES.

SOLID EDGE DRAWING

IMPLIED TOLERANCES
ALL DIMENSIONS ARE IN INCHES - TOLERANCE UNLESS OTHERWISE SPECIFIED

NOMINAL SIZE RANGE		INCH PLUS OR MINUS		METRIC PLUS OR MINUS	
OVER	TO	3 PLACE DECIMAL	2 PLACE DECIMAL	1 PLACE DECIMAL	2 PLACE DECIMAL
0	6	.03	.005	0	.5
6	24	.04	.008	150	1.0
24	-	.06	.010	-	600

NOMINAL SIZE RANGE		METRIC PLUS OR MINUS	
OVER	TO	1 PLACE DECIMAL	2 PLACE DECIMAL
0	150	.5	.13
150	600	1.0	.20
-	600	1.5	.25

UNLESS OTHERWISE SPECIFIED ALL MACHINED SURFACES WILL HAVE:
A SURFACE FINISH OF 125 MICROINCHES
ANGULAR TOLERANCE OF ± 30' DEBURR STRAIGHT WITH NO SLIP

THIRD ANGLE PROJECTION

UNLESS OTHERWISE SPECIFIED ALL WELDS SHOULD ADHERE TO THE LATEST HTT WELDING SPECIFICATION 101

CHANGE	R/L	REVISION	DATE
I00967	A	NEW RELEASE	3/I/07
I01081	B	ITEM 8 WAS H7274WAA	6/8/07
I01213	C	ITEM 10, II, 12, & 54 QTY. WAS 4. ITEM 50, 59, 107, & 110 QTY. WAS 3. ITEM 52 & 60 QTY. WAS 10. ITEM 13, 57, 73, & 79 QTY. WAS 6. ITEM 64, 65 & 66 QTY. WAS 5. ITEM 60 QTY. WAS 10. ITEM 61 QTY. WAS 12. ITEM 62 QTY. WAS 13. ITEM 63 QTY. WAS 23. ITEM 78 QTY. WAS 1. ITEM 93 QTY. WAS 15. ITEM 94 QTY. WAS 9. ITEM 96 QTY. WAS 2. ITEM I08 QTY. WAS 8. DELETED ITEM I03 D005876 QTY II & III I2006468 QTY II. ADDED ITEMS II9 THRU I23. ITEM I7 WAS A1920Y03. ITEM I06 QTY. WAS 1	7/26/07

Description: GENERAL ELECTRIC ASSEMBLY
Drawing Number: ----------
Model: 4013199.asm
Weight: 0.0 lbm
Scale: 1:4
Mat'l
Machine Type: MARK VI
Drawn: wgrier
Date Drawn: 3/1/07
APVD Dwg: JO'C
APVD ChDrg: JO'C

HTT
Harsco Track Technologies
Harsco
Columbia, SC

Part Number: 4013199
Size: D
Sheet: 4 of 5

Plotted by jrowell on 8/20/2007 4013199.dft

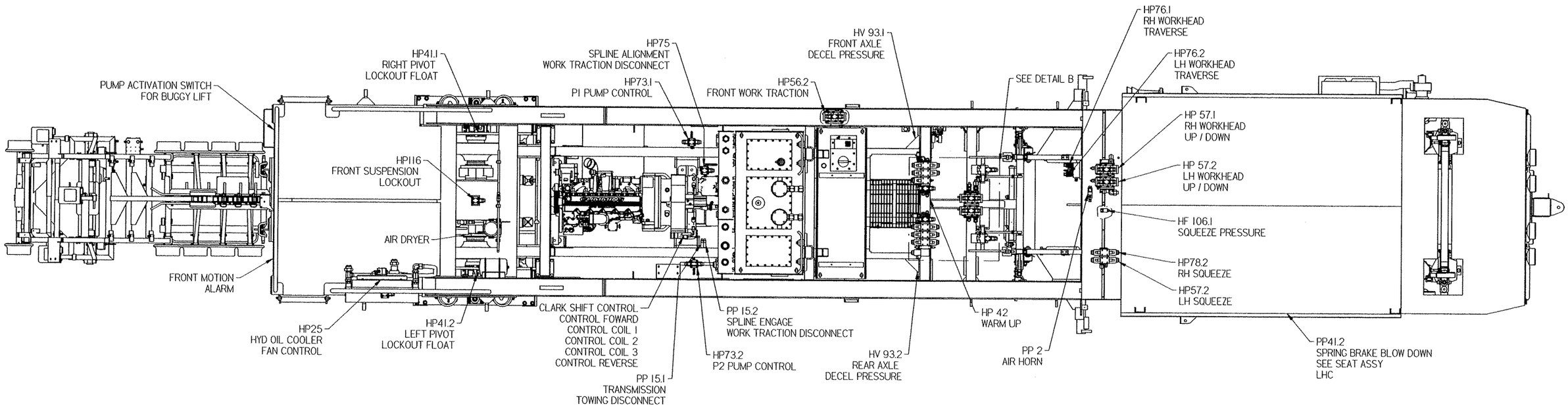

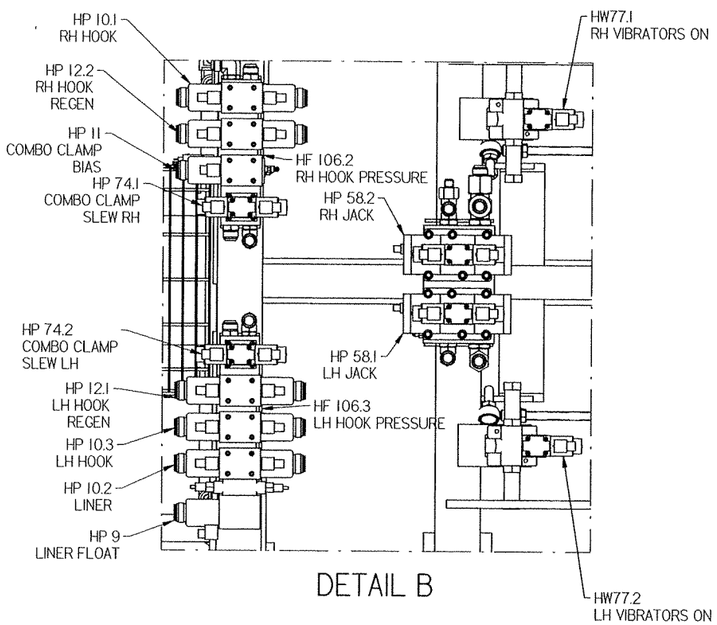

DETAIL B

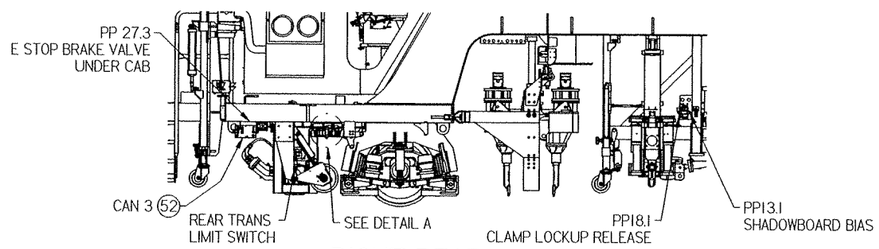

RIGHT REAR

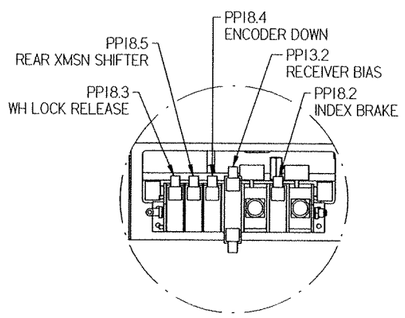

DETAIL A

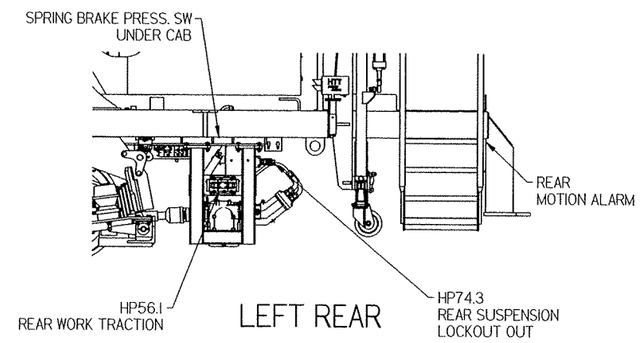

LEFT REAR

SOLID EDGE DRAWING

CONFIDENTIAL
© COPYRIGHT 2001 HARSCO TRACK TECHNOLOGIES. THIS DRAWING OR DOCUMENT IS THE PROPERTY OF HARSCO TRACK TECHNOLOGIES AND EMBODIES CONFIDENTIAL INFORMATION, TRADE SECRET INFORMATION, AND/OR KNOW-HOW THAT IS THE PROPERTY OF HARSCO TRACK TECHNOLOGIES. BY ACCEPTING THIS DRAWING OR DOCUMENT, THE RECIPIENT AGREES (1) NOT TO PROVIDE, OR OTHERWISE MAKE AVAILABLE, THE DRAWING OR DOCUMENT, OR ANY INFORMATION OR KNOW-HOW EMBODIED THEREIN, TO ANY THIRD PARTY AND (2) NOT TO REPRODUCE OR USE THE DRAWING OR DOCUMENT TO MANUFACTURE ANY APPARATUS OR DEVICE, WITHOUT THE PRIOR WRITTEN AUTHORIZATION OF HARSCO TRACK TECHNOLOGIES.

IMPLIED TOLERANCES

ALL DIMENSIONS ARE IN INCHES - TOLERANCE UNLESS OTHERWISE SPECIFIED

NOMINAL SIZE RANGE OVER	TO	INCH PLUS OR MINUS 2 PLACE DECIMAL	3 PLACE DECIMAL	NOMINAL SIZE RANGE OVER	TO	METRIC PLUS OR MINUS 1 PLACE DECIMAL	2 PLACE DECIMAL
0	6	.03	.005	0	150	.8	.13
6	24	.04	.008	150	600	1.0	.20
24	-	.06	.010	-	600	1.5	.25

UNLESS OTHERWISE SPECIFIED ALL MACHINED SURFACES WILL HAVE:
A SURFACE FINISH OF 125 MICROINCHES
ANGULAR TOLERANCE OF ± .50°
CONCENTRICITY WITHIN .010

THIRD ANGLE PROJECTION

UNLESS OTHERWISE SPECIFIED ALL WELDS SHOULD ADHERE TO THE LATEST HTT WELDING SPECIFICATION

CHANGE	R/L	REVISION	DATE
100967	A	NEW RELEASE	3/1/07
101081	B	ITEM 8 WAS H7274WAA	6/8/07
101213	C	ADDED DRAWING	7/26/07

Description: GENERAL ELECTRIC ASSEMBLY
Drawing Number: ----------
Machine Type: MARK VI
Model: 4013199.asm
Drawn: wgrier
Date Drawn: 3/1/07
Weight: 0.0 lbm
Scale: 1:4
APVD Dwg: JO'C
APVD ChDrg: JO'C
Mat1

HTT
Harsco Track Technologies
Harsco
Columbia, SC

Part Number: 4013199
Size: D
Sheet: 5 of 5

Plotted by jrowell on 8/20/2007 4013199.dft

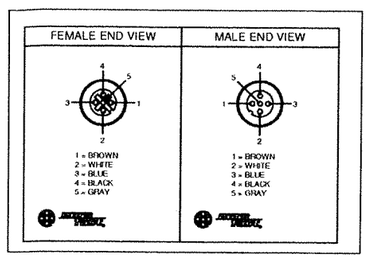

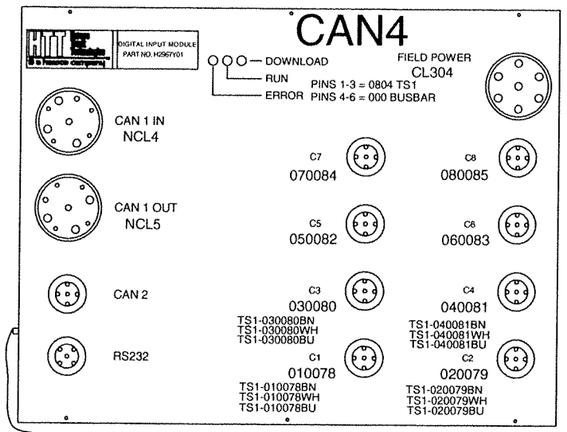

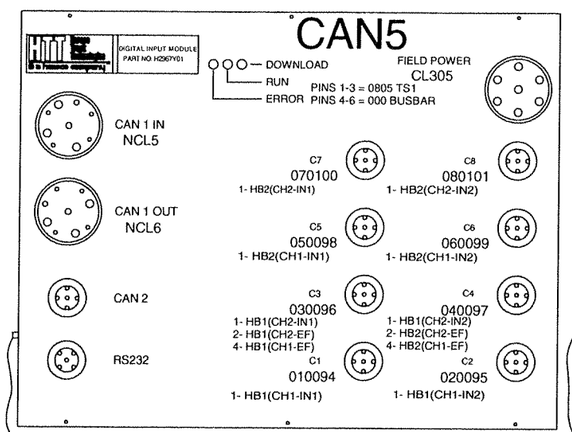

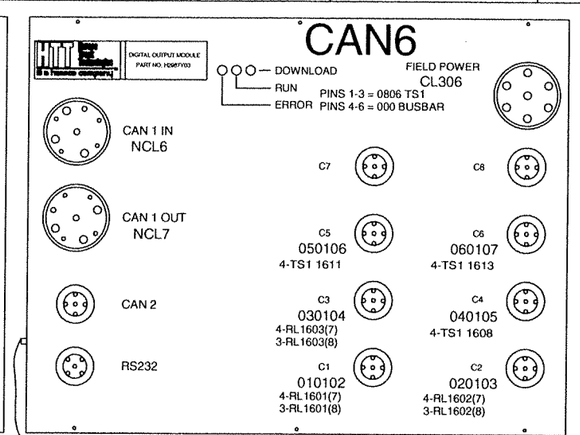

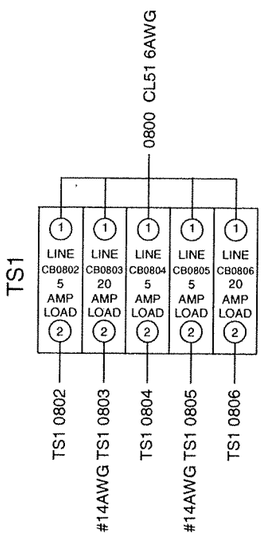

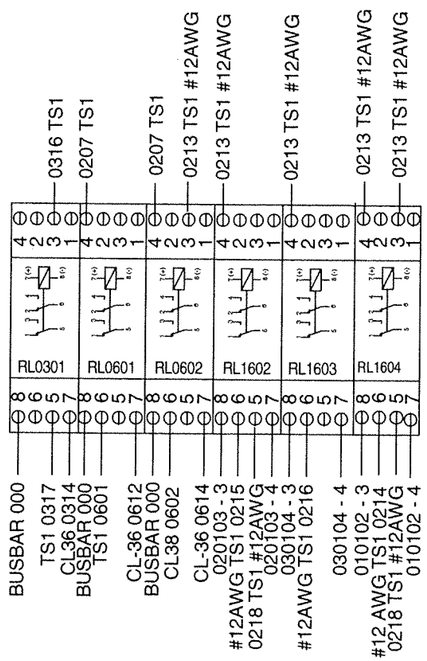

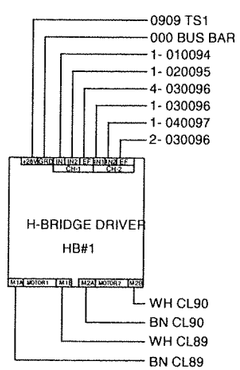

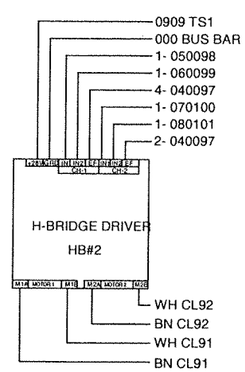

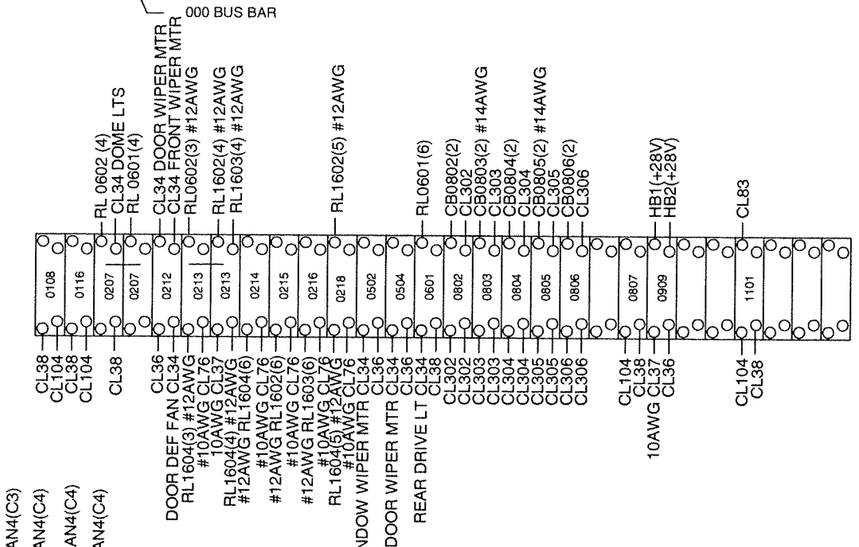

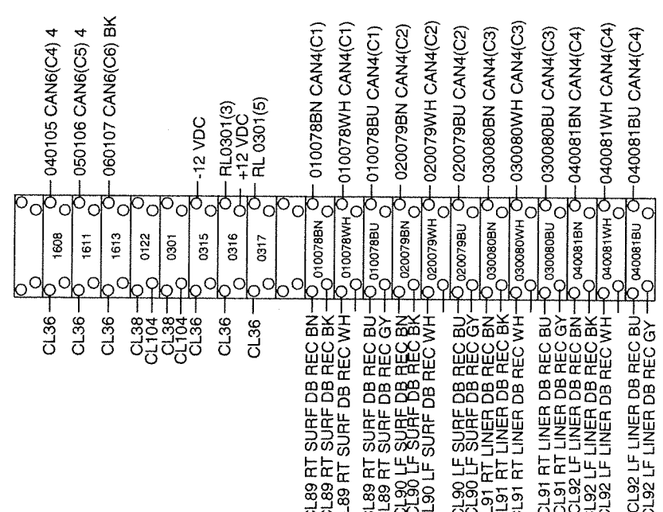

TS1 CONTINUED

NOTES:
1. ALL WIRES TO BE 16AWG UNLESS OTHERWISE NOTED.
2. ALL WIRES TO BE NUMBERED
3. LUGS ON 6AWG WIRE TO BE CRIMPED AND SOLDERED ON WIRE.
4. ALL 000 WIRES AND SHIELD WIRES TO GO TO 000 BUS BAR UNLESS OTHERWISE SPECIFIED.
5. THIS WIRING DIAGRAM IS USED TO WIRE ASSEMBLY 4013210

FOR REFERENCE ONLY

CONFIDENTIAL
● COPYRIGHT 2001 HARSCO TRACK TECHNOLOGIES. THIS DRAWING OR DOCUMENT IS THE PROPERTY OF HARSCO TRACK TECHNOLOGIES AND EMBODIES CONFIDENTIAL INFORMATION, TRADE SECRET INFORMATION, AND/OR KNOW-HOW THAT IS THE PROPERTY OF HARSCO TRACK TECHNOLOGIES. BY ACCEPTING THIS DRAWING OR DOCUMENT, THE RECIPIENT AGREES (1) NOT TO PROVIDE, OR OTHERWISE MAKE AVAILABLE, THE DRAWING OR DOCUMENT, OR ANY INFORMATION OR KNOW-HOW EMBODIED THEREIN, TO ANY THIRD PARTY AND (2) NOT TO REPRODUCE OR USE THE DRAWING OR DOCUMENT TO MANUFACTURE ANY APPARATUS OR DEVICE, WITHOUT THE PRIOR WRITTEN AUTHORIZATION OF HARSCO TRACK TECHNOLOGIES.

SOLID EDGE DRAWING

IMPLIED TOLERANCES
ALL DIMENSIONS ARE IN INCHES - TOLERANCE UNLESS OTHERWISE SPECIFIED

NOMINAL SIZE RANGE OVER	TO	INCH PLUS OR MINUS 1 PLACE DECIMAL	INCH PLUS OR MINUS 2 PLACE DECIMAL	NOMINAL SIZE RANGE OVER	TO	METRIC PLUS OR MINUS 1 PLACE DECIMAL	METRIC PLUS OR MINUS 2 PLACE DECIMAL
0	6	.03	.005	0	150	.8	.13
6	24	.04	.008	150	600	1.0	.20
24	-	.06	.010	-	600	1.5	.25

UNLESS OTHERWISE SPECIFIED ALL MACHINED SURFACES WILL HAVE:
A SURFACE FINISH OF 125 MICROINCHES
ANGULAR TOLERANCE OF ± 30'
CONCENTRICITY WITHIN .010

THIRD ANGLE PROJECTION

UNLESS OTHERWISE SPECIFIED ALL WELDS SHOULD ACHIEVE TO THE LATEST HTT WELDING SPECIFICATION KO1

CHANGE	R/L	REVISION	DATE
101152	A	NEW RELEASE	5/29/07
101213	B	REMOVE CB0807, ADDED WIRES 0218 & 0213	8/11/07

Description: MCB WIRING
Drawing Number: ----------
Model: 4013876.dft
Weight:
Mass:
Scale: 1:4
Machine Type: MARK VI N. Z.
Drawn: wgrier
Date Drawn: 5/29/07
APVD Dwg: WG
APVD Chkg: WG

HTT
Harsco Track Technologies
Harsco
Columbia, SC

Part Number: 4013876
Size: D
Sheet: 1 of 1

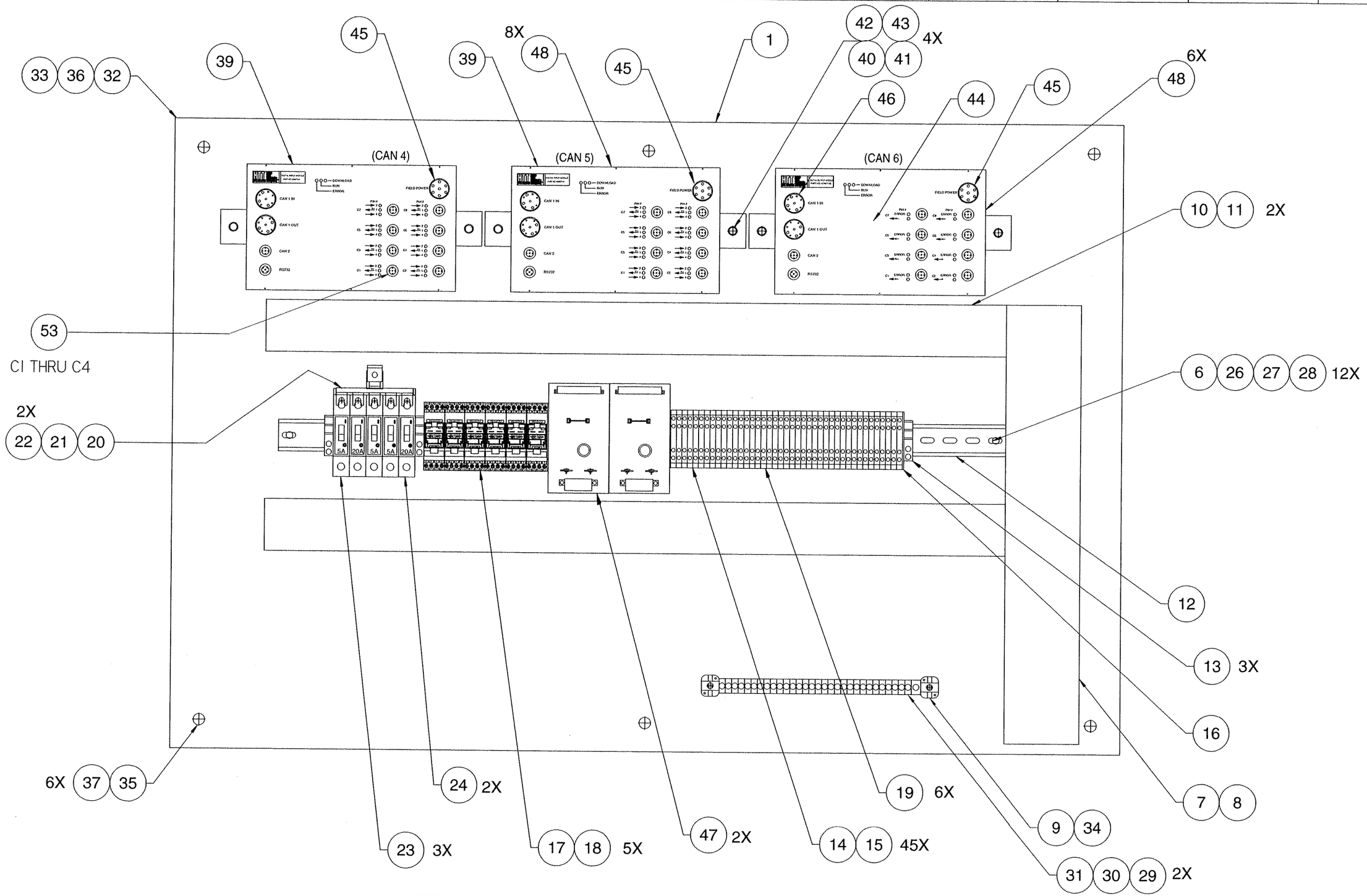

NOTES:

1. WIRE TO DRAWING 4013876

SOLID EDGE DRAWING

CONFIDENTIAL

© COPYRIGHT 2001 HARSCO TRACK TECHNOLOGIES. THIS DRAWING OR DOCUMENT IS THE PROPERTY OF HARSCO TRACK TECHNOLOGIES AND EMBODIES CONFIDENTIAL INFORMATION, TRADE SECRET INFORMATION, AND/OR KNOW-HOW THAT IS THE PROPERTY OF HARSCO TRACK TECHNOLOGIES. BY ACCEPTING THIS DRAWING OR DOCUMENT, THE RECIPIENT AGREES (1) NOT TO PROVIDE, OR OTHERWISE MAKE AVAILABLE, THE DRAWING OR DOCUMENT, OR ANY INFORMATION OR KNOW-HOW EMBODIED THEREIN, TO ANY THIRD PARTY AND (2) NOT TO REPRODUCE OR USE THE DRAWING OR DOCUMENT TO MANUFACTURE ANY APPARATUS OR DEVICE, WITHOUT THE PRIOR WRITTEN AUTHORIZATION OF HARSCO TRACK TECHNOLOGIES.

IMPLIED TOLERANCES

ALL DIMENSIONS ARE IN INCHES - TOLERANCE UNLESS OTHERWISE SPECIFIED

NOMINAL SIZE RANGE OVER	TO	INCH PLUS OR MINUS 2 PLACE DECIMAL	3 PLACE DECIMAL	NOMINAL SIZE RANGE OVER	TO	METRIC PLUS OR MINUS 1 PLACE DECIMAL	2 PLACE DECIMAL
0	6	.03	.005	0	150	.8	.13
6	24	.04	.008	150	600	1.0	.20
24	-	.06	.010	-	600	1.5	.25

UNLESS OTHERWISE SPECIFIED ALL MACHINED SURFACES WILL HAVE:
A SURFACE FINISH OF 125 MICROINCHES
ANGULAR TOLERANCE OF ± .50°
CONCENTRICITY WITHIN .010

THIRD ANGLE PROJECTION

UNLESS OTHERWISE SPECIFIED ALL WELDS SHOULD ADHERE TO THE LATEST HTT WELDING SPECIFICATION 101

CHANGE	R/L	REVISION	DATE
100967	A	NEW RELEASE	3/1/07
101081	B	WAS P/L. ONLY ITEM, I7 & I8 QTY. WAS 5, DELETED IT. 3, 4 & 5, ITEM 39 QTY. WAS I IT 6, 26 & 28 QTY. WAS I5. IT 40 - 43 QTY. WAS 4, IT 45 QTY WAS 2. IT, 46 QTY WAS I. IT. 48 QTY WAS I4. IT 48 # WAS H5750Y10	5/17/07
101152	C	ADDED CAN 4 CABLE PLACEMENT C1-C8. IT 24 QTY. WAS 3. IT. 2I WAS H4985Y03	7/10/07
101213	D	DELETED ITEM 49 THRU 53, ITEM 48 QTY. WAS I5	8/6/07

Description: MCB ASSEMBLY

Drawing Number: ----------

Model: 4013210.dft

Weight: Scale: 1:4

Mat'l

Machine Type: MARK VI N.Z.

Drawn: jlowell Date Drawn: 3/1/07

APVD Dwg: JO'C APVD ChKrg: JO'C

HTT
Harsco Track Technologies
Harsco
Columbia, SC

Part Number: 4013210 Size: D Sheet: 1 of 2

Plotted by wgrier on 8/20/2007 4013210.dft

ITEM	PART NUMBER	DESCRIPTION	QTY
1	H6768W01	MCB PANEL DRILLING	1
~~3~~	~~F040972~~	~~LIGHT~~	~~1~~
~~4~~	~~0-3101019-0-06~~	~~MINATURE LAMP~~	~~1~~
~~5~~	~~A0050056~~	~~10 - 24 X 3/4 RDHD MSCR CP USE~~	~~3~~
6	A0059025	#10 MED PLAIN WASHER USE	12
7	D1566Y21	WIRE DUCT, 3 X 4 X 19	1
8	D1566Y22	3 IN COVER, 19 LG	1
9	C9247YAB	BUSBAR 30 SM & 1 MD	1
10	A1263T39	DUCT	2
11	A1263T40	DUCT COVER	2
12	B0971T54	MOUNTING RAIL	1
13	B0970Y05	END CLAMP	3
14	B0970Y01	FOUR PLACE TERMINAL	45
15	B0970Y07	MARKING STRIP	45
16	B0970Y02	END PLATE	1
17	D0650Y04	PLUG-IN RELAY SOCKET	6
18	D0650Y07	PLUG-IN RELAY, 24V	6
19	B0970Y06	CHAIN BRIDGE	6
20	B1382Y09	FEEDER LUG, SIEMENS	1
21	H4985Y02	BUSBAR, SIEMENS, 5 CB	1
22	B1382Y08	END CAP, SIEMENS BUSBAR	2
23	C9678Y08	5 AMP DIN RAIL CB	3
24	C9678Y11	20 AMP DIN RAIL CB	2
26	A1563Y05	INSERT THREADED	12
27	A0050068	10-32X1/2 RDHD MSCR CP USE	12
28	A0061006	#10 LOK WSHR ORDER USE F025837	12
29	A1563Y03	INSERT 8-32	2
30	A0050040	8-32 X 5/8 RDHD MSCR CP USE	2
31	A0061005	#8 LOK WSHR	2
32	A9297Y03	16 GA. WIRE	18
33	A9297Y04	14 GA. WIRE	5
34	L411079	#6 AWG WIRE USE 164834	8
35	A0059003	3/8 REG PL WSHR	6

ITEM	PART NUMBER	DESCRIPTION	QTY
36	A9297Y06	10 GA. WIRE	10
37	0-3011001-0-01	LOCKNUT, 3/8-16 HEX LIGHT THIN	6
39	H2967Y01	JUPITER DIGITAL INPUT, PROGRAM	2
40	A1563Y07	INSERT THREADED	6
41	A0036002	1/4-20 X 5/8 HHCAPSCREW USE	6
42	A0061048	1/4 LOCKWASHER CAD PLATE USE	6
43	A0059028	1/4 MED CAD PL PLAIN WA	6
44	H2967Y03	JUPITER OUTPUT MODULE, PROGRAM	1
45	414272	CABLE ASSEMBLY, M23-M, PIG, 5	3
46	414274	CABLE ASSEMBLY,M23-M/F 0.7 MET	2
47	H5614Y01	H-BRIDGE DRIVER	2
48	4012176	CL ASSY M12, M/PIG, 2M HF	14
~~49~~	~~3401329~~	~~CABLE ASSEMBLY, M23 M/F 10M HF~~	~~2~~
~~50~~	~~3401327~~	~~CABLE ASSEMBLY, M12 M/F 5M HF~~	~~2~~
~~51~~	~~3401332~~	~~CABLE ASSEMBLY, M12 M/PIG 10M HF~~	~~2~~
~~52~~	~~3401328~~	~~CABLE ASSEMBLY, M12 M/F 7M HF~~	~~2~~
53	3401339	CABLE ASSEMBLY, M12 M/PIG 4M HF	4

CONFIDENTIAL
©COPYRIGHT 2001 HARSCO TRACK TECHNOLOGIES. THIS DRAWING OR DOCUMENT IS THE PROPERTY OF HARSCO TRACK TECHNOLOGIES AND EMBODIES CONFIDENTIAL INFORMATION, TRADE SECRET INFORMATION, AND/OR KNOW-HOW THAT IS THE PROPERTY OF HARSCO TRACK TECHNOLOGIES. BY ACCEPTING THIS DRAWING OR DOCUMENT, THE RECIPIENT AGREES (1) NOT TO PROVIDE, OR OTHERWISE MAKE AVAILABLE, THE DRAWING OR DOCUMENT, OR ANY INFORMATION OR KNOW-HOW EMBODIED THEREIN, TO ANY THIRD PARTY AND (2) NOT TO REPRODUCE OR USE THE DRAWING OR DOCUMENT TO MANUFACTURE ANY APPARATUS OR DEVICE, WITHOUT THE PRIOR WRITTEN AUTHORIZATION OF HARSCO TRACK TECHNOLOGIES.

SOLID EDGE DRAWING

IMPLIED TOLERANCES
ALL DIMENSIONS ARE IN INCHES - TOLERANCE UNLESS OTHERWISE SPECIFIED

INCH NOMINAL SIZE RANGE OVER	TO	PLUS OR MINUS 2 PLACE DECIMAL	PLUS OR MINUS 3 PLACE DECIMAL	METRIC NOMINAL SIZE RANGE OVER	TO	PLUS OR MINUS 1 PLACE DECIMAL	PLUS OR MINUS 2 PLACE DECIMAL
0	6	.03	.005	0	150	.8	.13
6	24	.04	.008	150	600	1.0	.20
24	-	.06	.010	-	600	1.5	.25

UNLESS OTHERWISE SPECIFIED ALL MACHINED SURFACES WILL HAVE:
A SURFACE FINISH OF 125 MICRONINCHES
ANGULAR TOLERANCE OF ± .50°
CONCENTRICITY WITHIN .005

THIRD ANGLE PROJECTION

UNLESS OTHERWISE SPECIFIED ALL WELDS SHOULD ADHERE TO THE LATEST HTT WELD PRO SPECIFICATION 101

CHANGE	R/L	REVISION	DATE
100967	A	NEW RELEASE	3/1/07
101081	B	WAS P/L. ONLY ITEM, I7 & I8 QTY. WAS 5, DELETED IT. 3, 4 & 5, ITEM 39 QTY. WAS I IT 6, 26 & 28 QTY. WAS I5. IT 40 - 43 QTY. WAS 4, IT 45 QTY WAS 2. IT, 46 QTY WAS I. IT. 48 QTY WAS I4. IT 48 # WAS H5750Y10	5/17/07
101152	C	ADDED CAN 4 CABLE PLACEMENT C1-C8. IT 24 QTY. WAS 3. IT. 21 WAS H4985Y03	7/10/07
101213	D	DELETED ITEM 49 THRU 53, ITEM 48 QTY. WAS I5	8/6/07

Description: MCB ASSEMBLY
Drawing Number: ----------
Model: 4013210.dft
Weight:
Scale: 1:4
Machine Type: MARK VI N.Z.
Drawn: jrowell
Date Drawn: 3/1/07
APVD Dwg: JO'C
APVD Dtlrg: JO'C
Mat'l

HTT
Harsco Track Technologies
Harsco
Columbia, SC

Part Number: 4013210
Size: D
Sheet: 2 of 2

Plotted by wgrier on 8/20/2007 4013210.dft

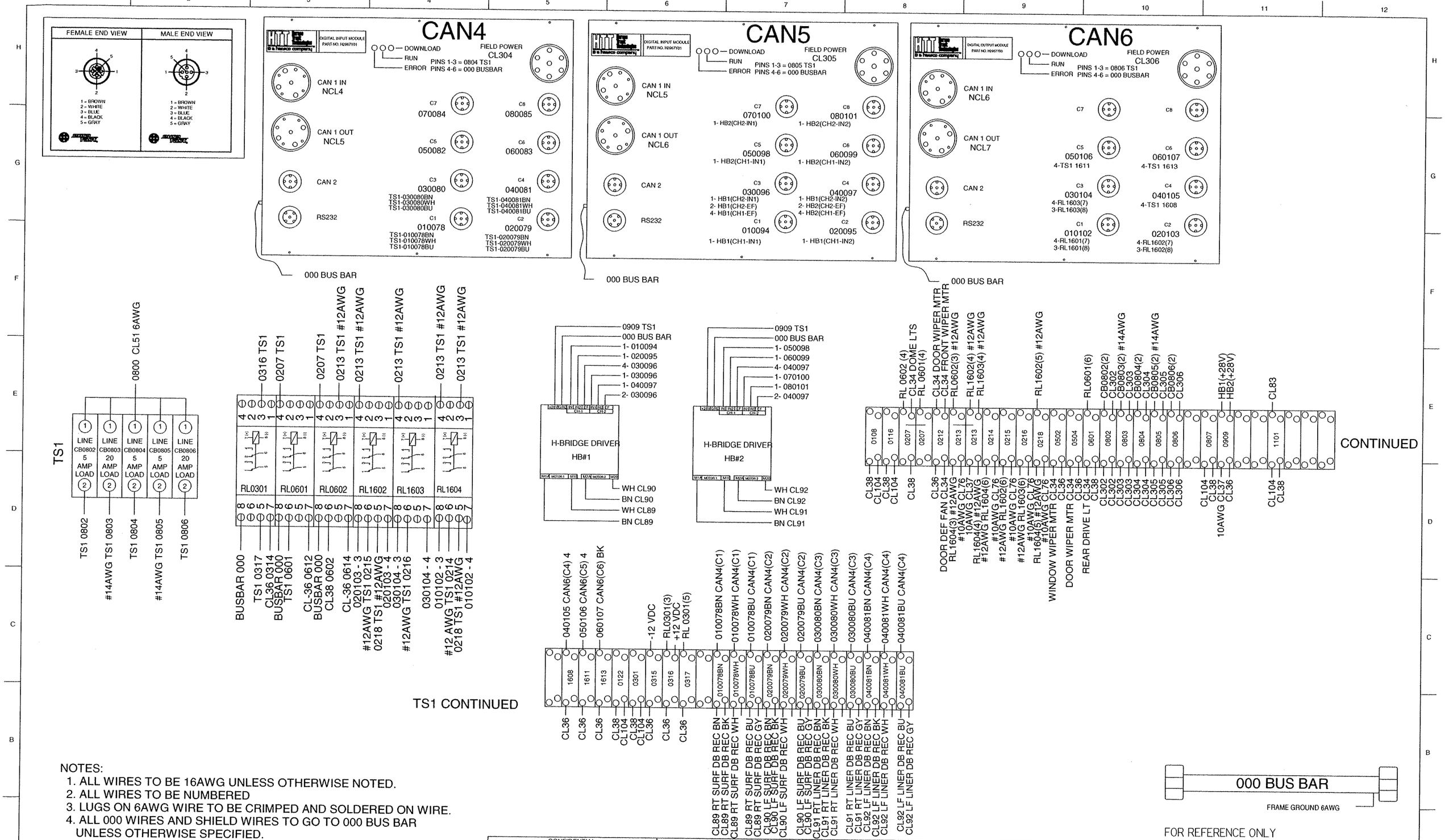

NOTES:

1. ALL WIRES TO BE 16AWG UNLESS OTHERWISE NOTED.
2. ALL WIRES TO BE NUMBERED
3. LUGS ON 6AWG WIRE TO BE CRIMPED AND SOLDERED ON WIRE.
4. ALL 000 WIRES AND SHIELD WIRES TO GO TO 000 BUS BAR UNLESS OTHERWISE SPECIFIED.
5. THIS WIRING DIAGRAM IS USED TO WIRE ASSEMBLY 4013210

CONFIDENTIAL
© COPYRIGHT 2001 HARSCO TRACK TECHNOLOGIES. THIS DRAWING OR DOCUMENT IS THE PROPERTY OF HARSCO TRACK TECHNOLOGIES AND EMBODIES CONFIDENTIAL INFORMATION, TRADE SECRET INFORMATION, AND/OR KNOW-HOW THAT IS THE PROPERTY OF HARSCO TRACK TECHNOLOGIES. BY ACCEPTING THIS DRAWING OR DOCUMENT, THE RECIPIENT AGREES (1) NOT TO PROVIDE, OR OTHERWISE MAKE AVAILABLE, THE DRAWING OR DOCUMENT, OR ANY INFORMATION OR KNOW-HOW EMBODIED THEREIN, TO ANY THIRD PARTY AND (2) NOT TO REPRODUCE OR USE THE DRAWING OR DOCUMENT TO MANUFACTURE ANY APPARATUS OR DEVICE, WITHOUT THE PRIOR WRITTEN AUTHORIZATION OF HARSCO TRACK TECHNOLOGIES.

SOLID EDGE DRAWING

IMPLIED TOLERANCES
ALL DIMENSIONS ARE IN INCHES - TOLERANCE UNLESS OTHERWISE SPECIFIED

NOMINAL SIZE RANGE		HIGH PLUS OR MINUS		NOMINAL SIZE RANGE		METRIC PLUS OR MINUS	
OVER	TO	1 PLACE DECIMAL	2 PLACE DECIMAL	OVER	TO	1 PLACE DECIMAL	2 PLACE DECIMAL
0	6	.03	.005	0	150	.8	.13
6	24	.04	.008	150	600	1.0	.20
24	-	.06	.010	-	600	1.5	.25

UNLESS OTHERWISE SPECIFIED ALL MACHINED SURFACES WILL HAVE A SURFACE FINISH OF 125 MICROINCHES AND/OR TOLERANCE OF ± 30° CONCENTRICITY WITHIN .010

THIRD ANGLE PROJECTION

UNLESS OTHERWISE SPECIFIED ALL WELDS SHALL ADHERE TO THE LATEST HTT WELDING SPECIFICATION 101

CHANGE	R/L	REVISION	DATE
101152	A	NEW RELEASE	5/29/07
101213	B	REMOVE CB0807. ADDED WIRES 0218 & 0213, ADDED RECEIVER WIRING	8/11/07

Description: MCB WIRING
Drawing Number: ----------
Model: 4013876.dft
Weight:
Scale: 1:4
Mat'l:
Machine Type: MARK VI N. Z.
Drawn: wgrier
Date Drawn: 5/29/07
APVD Dwg: WG
APVD ChDrg: WG

HTT
Harsco Track Technologies
Harsco
Columbia, SC

Part Number: 4013876
Size: D
Sheet: 1 of 1

Plotted by wgrier on 8/20/2007 4013876.dft

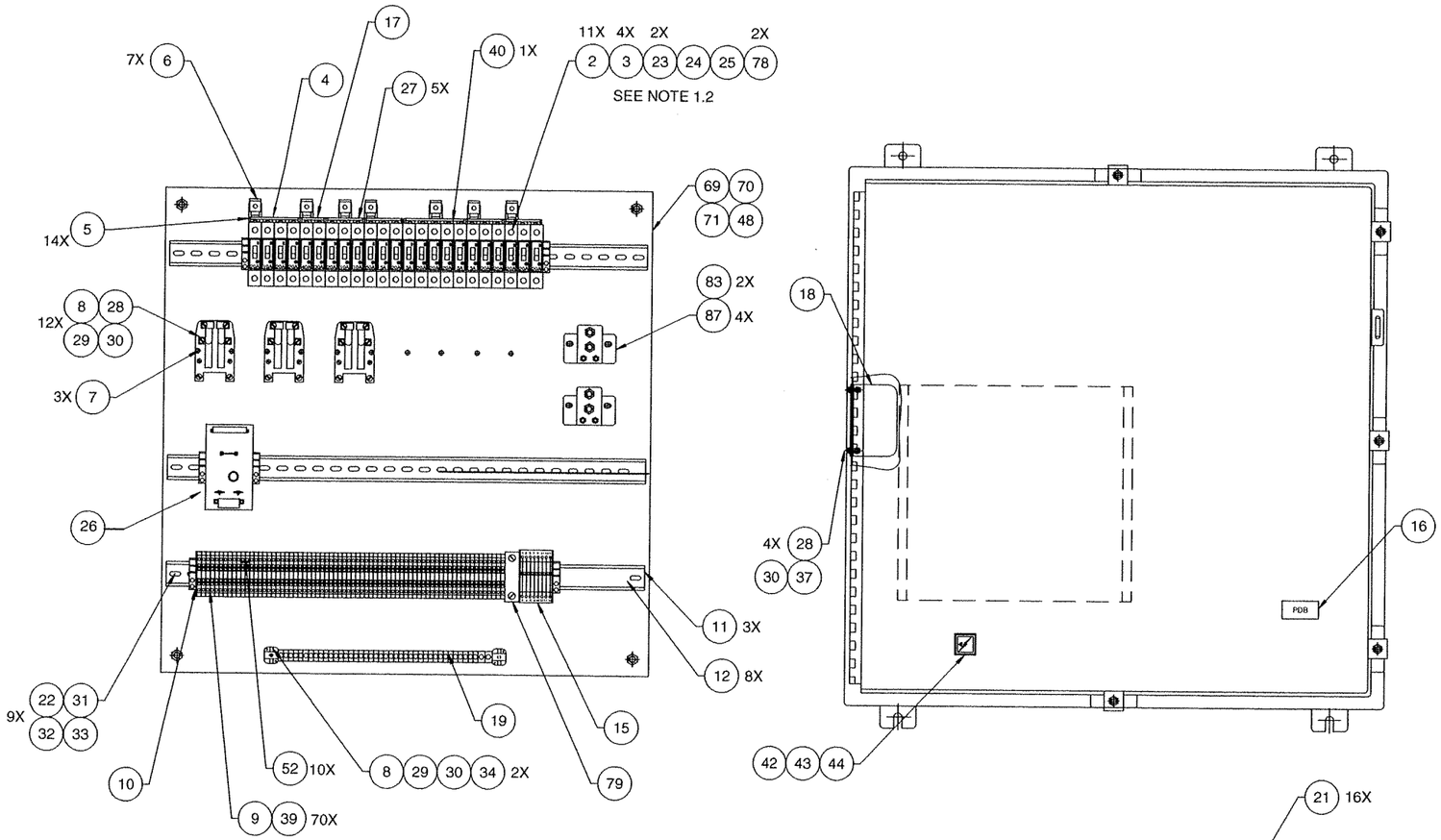

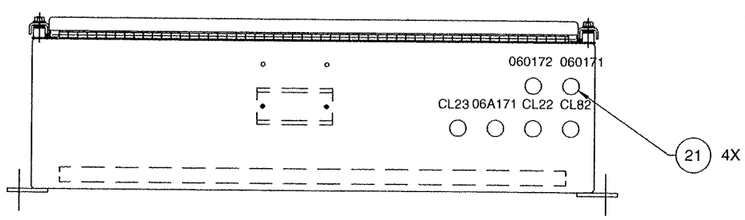

LEFT SIDE VIEW

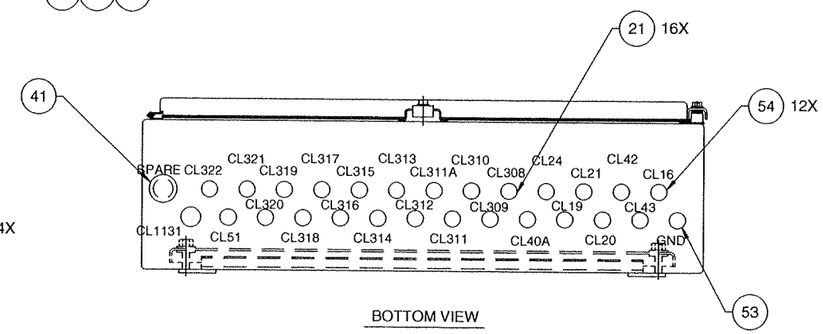

BOTTOM VIEW

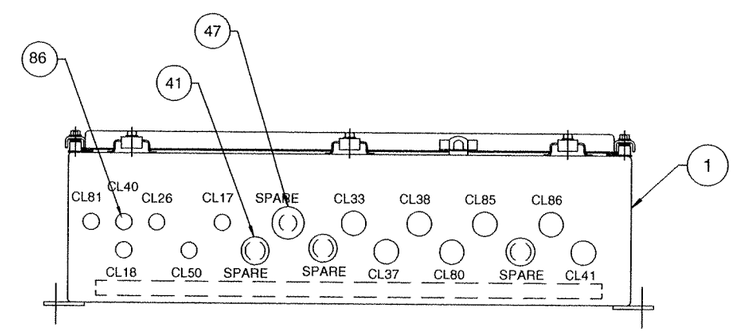

RIGHT SIDE VIEW

NOTES:

1.1) SEE 4013838 FOR PDB WIRING.

1.2) REF. WIRING FOR COMPONET PLACEMENT & LABELING.

*** CONTINUED ON SHEET 2 ***

SOLID EDGE DRAWING

CONFIDENTIAL
© COPYRIGHT 2001 HARSCO TRACK TECHNOLOGIES. THIS DRAWING OR DOCUMENT IS THE PROPERTY OF HARSCO TRACK TECHNOLOGIES AND EMBODIES CONFIDENTIAL INFORMATION, TRADE SECRET INFORMATION, AND/OR KNOW-HOW THAT IS THE PROPERTY OF HARSCO TRACK TECHNOLOGIES. BY ACCEPTING THIS DRAWING OR DOCUMENT, THE RECIPIENT AGREES (1) NOT TO PROVIDE, OR OTHERWISE MAKE AVAILABLE, THE DRAWING OR DOCUMENT, OR ANY INFORMATION OR KNOW-HOW EMBODIED THEREIN, TO ANY THIRD PARTY AND (2) NOT TO REPRODUCE OR USE THE DRAWING OR DOCUMENT TO MANUFACTURE ANY APPARATUS OR DEVICE, WITHOUT THE PRIOR WRITTEN AUTHORIZATION OF HARSCO TRACK TECHNOLOGIES.

IMPLIED TOLERANCES
ALL DIMENSIONS ARE IN INCHES - TOLERANCE UNLESS OTHERWISE SPECIFIED

NOMINAL SIZE RANGE		INCH PLUS OR MINUS		NOMINAL SIZE RANGE		METRIC PLUS OR MINUS	
OVER	TO	2 PLACE DECIMAL	3 PLACE DECIMAL	OVER	TO	1 PLACE DECIMAL	2 PLACE DECIMAL
0	6	.03	.005	0	150	.8	.13
6	24	.04	.008	150	600	1.0	.20
24	-	.06	.010	-	600	1.5	.25

UNLESS OTHERWISE SPECIFIED ALL MACHINED SURFACES WILL HAVE:
A SURFACE FINISH OF 125 MICROINCHES
ANGULAR TOLERANCE OF ± 30'
CONCENTRICITY WITHIN .010

THIRD ANGLE PROJECTION

UNLESS OTHERWISE SPECIFIED ALL WELDS SHOULD ADHERE TO THE LATEST HTT WELDING SPECIFICATION (0)

CHANGE	R/L	REVISION	DATE
101081	A	NEW RELEASE	5/18/07
101152	B	ITEM 2 QTY. WAS 11. ITEM 78 QTY. WAS 2. IT. 4 WAS BLANK. IT. 27 QTY WAS 5	7/18/07

Description: PDB ASSEMBLY
Drawing Number: ----------
Model: 4013837.dft
Weight:
Mat'l:
Scale: 1:4
Machine Type: MARK VI (N Z) 2007
Drawn: wgrier
Date Drawn: 5/18/07
APVD Dwg: WG
APVD Dtng: JR

HTT
Harsco Track Technologies
Harsco
Columbia, SC

Part Number: 4013837
Size: D
Sheet: 1 of 3

Plotted by jrowell on 8/13/2007 4013837.dft

CABLE CONSTRUCTION CHART

CABLE NO.	WIRE NOS.	BOX END FROM	BOX END ITEM(QTY)	BOX END OUTER INSL STRIP (INCHES)	DEVICE END TO	DEVICE END ITEM(QTY)	DEVICE END OUTER INSL STRIP (INCHES)	CABLE ITEM (QTY) (FEET)	CABLE P/N
CL41	0302,0108,0108,0116,0117 0304,0304,0303,0201, 000,000,000,SP1-5	PDB	57 (1)	36	ENGINE	N/A	N/A	69 (595) 67 (32)	4013837CL41
	0105(JUMPER)							72 (10) NOTE 2.4	
CL85	0203,0212,0721,000,000W	PDB	55 (1)	36	RECP	63 (1)	6	60 (29)	4013837CL85
CL80	0116,0117,0201,0207,0301, 0302,0303,0304,0314, 0411,0718,SP1-14	PDB	61 (1)	36	RECP	64 (1)	6	58 (29)	4013837CL80
CL38	0108,0116,0122,0207, 0303,0601,0602 0807,1101,SP1-9	PDB	55 (1)	36	MCB	63 (1)	6	59 (44)	4013837CL38
CL37	0213,0909,000,SP1-2	PDB	55 (1)	36	MCB	63 (1)	6	60 (44)	4013837CL37
CL1131	0103	PDB	75 (1)	N/A	STARTER	74 (1)	N/A	73 (25)	4013837CL1131
CL33	0603,000,SP1-3	PDB	55 (1)	36	REAR CAB AC	N/A	3	60 (44)	4013837CL33
CL23	0403,000	PDB	54 (1)	24	COMBO CLP WK LT RH	N/A	3	65 (30)	4013837CL23
CL22	0402,000	PDB	54 (1)	24	COMBO CLP WK LT LH	N/A	3	65 (30)	4013837CL22
CL51	0800	PDB	54 (1)	N/A	MCB	88 (1)	N/A	56 (44)	4013837CL51
CL42	0402,000	PDB	54 (1)	24	R/CAB WK LT LH	N/A	3	65 (30)	4013837CL42
CL43	0403,000	PDB	54 (1)	24	R/CAB WK LT RH	N/A	3	65 (30)	4013837CL43
CL50	0104,SP1	PDB	54 (1)	24	EMERG PUMP RELAY	N/A	3	65 (35)	4013837CL50
CL81	1101 BLK, 000 BLU	PDB	54 (1)	24	PDB TO MIDDLE TRACTION SAFETY RELAY(PWR); CUT OFF MALE END	N/A	3	38 (1)	4013837CL81
CL82	1101 BLK, 000 BLU	PDB	54 (1)	24	PDB TO FRONT TRACTION SAFETY RELAY(PWR); CUT OFF MALE END	N/A	3	62 (1)	4013837CL82
06A171	BK,WT,BL	PDB	54 (1)	36	ENG THROTTLE ACT	N/A	N/A	38 (1) NOTE 2.5	401383706A171
CL40	0301,000	PDB	54 (1)	24	SPRING BRAKE BLOW DN	N/A	3	65 (25)	4013837CL40
CL40A	0111,000	PDB	54 (1)	24	E - STOP BRAKE VAL	N/A	3	65 (35)	4013837CL40A

NOTES: *** CONTINUED FROM SHEET 1 ***

2.1) MARK WIRES WITH NUMBERS SHOWN ON CHART.
2.2) MARK CABLES WITH CABLE NUMBER.
2.3) WHEN ORDERING REPLACEMENT CABLE, USE THE CABLE PART NUMBER. FOR EXAMPLE, TO ORDER CL301, USE PART NUMBER 4013837CL301
2.4) JUMPER FROM FUEL SOLENOID TO STARTER RELAY. ATTACH JUMPER TO CABLE.
2.5) CUT OFF 6" OF CABLE(PIN 414263) FROM END WITH MALE CONNECTION AND DISCARD. COMPLETE BY CABLE CONSTRUCTION CHART.

SOLID EDGE DRAWING

CONFIDENTIAL
© COPYRIGHT 2001 HARSCO TRACK TECHNOLOGIES. THIS DRAWING OR DOCUMENT IS THE PROPERTY OF HARSCO TRACK TECHNOLOGIES AND EMBODIES CONFIDENTIAL INFORMATION, TRADE SECRET INFORMATION, AND/OR KNOW-HOW THAT IS THE PROPERTY OF HARSCO TRACK TECHNOLOGIES. BY ACCEPTING THIS DRAWING OR DOCUMENT, THE RECIPIENT AGREES (1) NOT TO PROVIDE, OR OTHERWISE MAKE AVAILABLE, THE DRAWING OR DOCUMENT, OR ANY INFORMATION OR KNOW-HOW EMBODIED THEREIN, TO ANY THIRD PARTY AND (2) NOT TO REPRODUCE OR USE THE DRAWING OR DOCUMENT TO MANUFACTURE ANY APPARATUS OR DEVICE, WITHOUT THE PRIOR WRITTEN AUTHORIZATION OF HARSCO TRACK TECHNOLOGIES.

IMPLIED TOLERANCES
ALL DIMENSIONS ARE IN INCHES - TOLERANCE UNLESS OTHERWISE SPECIFIED

INCHES NOMINAL SIZE RANGE OVER	TO	INCHES PLUS OR MINUS 2 PLACE DECIMAL	INCHES PLUS OR MINUS 3 PLACE DECIMAL	MM NOMINAL SIZE RANGE OVER	TO	MM PLUS OR MINUS 1 PLACE DECIMAL	MM PLUS OR MINUS 2 PLACE DECIMAL
0	6	.03	.005	0	150	.8	.13
6	24	.04	.006	150	600	1.0	.20
24	-	.06	.010	-	600	1.5	.25

UNLESS OTHERWISE SPECIFIED ALL MACHINED SURFACES WILL HAVE A SURFACE FINISH OF 125 MICROINCHES ANGULAR TOLERANCE OF ± .50° CONCENTRICITY WITHIN .010

THIRD ANGLE PROJECTION

UNLESS OTHERWISE SPECIFIED ALL WELDS SHOULD ADHERE TO THE LATEST HTT WELDING SPECIFICATION 100

CHANGE	R/L	REVISION	DATE
101081	A	NEW RELEASE	5/18/07
101152	B	ITEM 2 QTY. WAS 11, ITEM 78 QTY. WAS 2, IT. 4 WAS BLANK, IT. 27 QTY WAS 5	7/18/07

Description: PDB ASSEMBLY
Drawing Number: ----------
Model: 4013837.dft
Weight:
Scale: 1:4
Material:
Machine Type: MARK VI (N Z) 2007
Drawn: wgrier
Date Drawn: 5/18/07
APVD Dwg: WG
APVD Ctrlg: JR

HTT
Harsco Track Technologies
Harsco
Columbia, SC

Part Number: 4013837
Size: D
Sheet: 2 of 3

Plotted by jrowell on 8/13/2007 4013837.dft

PARTS LIST

ITEM NO	PART NUMBER	DESCRIPTION	
1	H5070W05	PDB DRILLING	1
2	C9678Y11	20 AMP DIN RAIL C.B	13
3	C9678Y08	5 AMP DIN RAIL C.B	4
4	H4985Y01	BUSBAR, SIEMENS, 4 C.B.	1
5	B1382Y08	END CAP, SIEMENS BUSBAR	14
6	B1382Y09	FEEDER LUG, SIEMENS	7
7	0-3122011-0-01	POWER RELAY 24 VOLT	3
8	A1563Y03	8-32 THREADED INSERT	12
9	B0970Y01	4 PLACE TERMINAL BLOCK	70
10	B0970Y02	END PLATE	1
11	B0971T21	26.5 IN. MOUNTING RAIL	3
12	B0970Y05	END CLAMP	6
13	BLANK		0
14	BLANK		0
15	B0970Y20	DIODE MODULE 8 INDIV	1
16	D2892Y04	NAMEPLATE, PDB	1
17	H4985Y10	BUSBAR, SIEMENS, 2 C.B	1
18	C9719Y02	POWER DIST. BLOCK	1
19	C9247YAC	BUSBAR, 40 SM & 2 MD	1
20	BLANK		0
21	L420607	STRAIN RELIEF 90 DEG	20
22	A1563Y05	10-32 THREADED INSERT	9
23	C9678Y09	10 AMP DIN RAIL C.B	2
24	C9678Y14	50 AMP DIN RAIL C.B	1
25	C9678Y12	30 AMP DIN RAIL C.B	1
26	H5614Y01	H-BRIDGE DRIVER	1
27	H4985Y06	BUSBAR, SIEMENS, 3 C.B.	4
28	A0050040	8-32 X 5/8 PL RD HD MS	14
29	A0061005	8 PLATED LOCK WASHER	16
30	A0059027	8 PLATED FLAT WASHER	16
31	A0050068	10-32 X 1/2 PL RD HD MS	9
32	A0061006	10 PLATED LOCK WASHER	9
33	A0059025	10 MEDIUM PLTD FL WASH	9

PARTS LIST

ITEM NO	PART NUMBER	DESCRIPTION	
34	A0050042	8-32 X 1 PL RD HD MS	2
35	BLANK		0
36	BLANK		0
37	0-3011001-0-93	LOCKNUT ESNA-GRIPCO	4
38	414263	CABLE ASSY M12 M/F 6M	1
39	B0970Y07	MARKING STRIP	70
40	H4985Y02	BUSBAR, SIEMENS, 5 C.B.	1
41	0-3274001-0-05	HOLE PLUG, 3/4 INCH	2
42	A0653Y01	CONTACT BLOCK (NO NO)	1
43	A0655Y01	PUSH BUTTON SWITCH RED	1
44	A1920Y20	FILM INSERT	1
45	BLANK		0
46	BLANK		0
47	0-3274001-0-01	HOLE PLUG	1
48	0-3212004-0-91	COPPER WIRE, #4 AWG	5
49	BLANK		0
50	BLANK		0
51	BLANK		0
52	B0970Y06	CHAIN BRIDGE	10
53	G6350YAA	BOX GROUNDING KIT	1
54	A1278Y10	STRAIN RELIEF 90 DEG	11
55	A1278Y19	STRAIN RELIEF 90 DEG	4
56	L411079	CABLE, #6 AWG	44
57	0-3261001-0-05	STRAIN RELIEF 90 DEG	1
58	BLANK		0
59	L421290	CABLE, 16/16	44
60	0-3212004-0-47	CABLE 10/5 TYPE SO	117
61	A1278Y17	STRAIN RELIEF 90 DEG	1
62	415905	CAB ASSY, M12, M/F, 10M	1
63	L41359	1 IN ST STRAIN RELIEF	3
64	L425688	1 IN ST STR RELIEF .9-1	1
65	L411089	CABLE, 16/2	215
66	BLANK		0

PARTS LIST

ITEM NO	PART NUMBER	DESCRIPTION	
67	B1623Y04	CORRUGATED CONDUIT, 3/4"	32
68	BLANK		0
69	A9297Y03	COPPER WIRE, 16AWG	595
70	A9297Y04	COPPER WIRE, 14AWG	50
71	A9297Y06	COPPER WIRE, 10AWG	50
72	A9297Y05	COPPER WIRE, 12AWG	10
73	0-3211009-0-18	CABLE, 2/0	25
74	L424722	TERMINAL LUG, 1/0-2/0	1
75	A1278Y14	STRAIN RELIEF 90 DEG	1
76	BLANK		0
77	BLANK		0
78	C9678Y13	40 AMP DIN RAIL C.B	1
79	B0970Y42	TERMINAL BLOCK, 1/0	1
80	BLANK		0
81	BLANK		0
82	BLANK		0
83	172164	POWER CONTACTOR	2
84	BLANK		0
85	BLANK		0
86	0-3274001-0-04	HOLE PLUG (7/8 HOLE)	11
87	F015121K	#6 AWG RING TERMINAL	4
88	L410970	1/2 IN ST STRAIN RELIEF	1

CONFIDENTIAL
© COPYRIGHT 2001 HARSCO TRACK TECHNOLOGIES. THIS DRAWING OR DOCUMENT IS THE PROPERTY OF HARSCO TRACK TECHNOLOGIES AND EMBODIES CONFIDENTIAL INFORMATION, TRADE SECRET INFORMATION, AND/OR KNOW-HOW THAT IS THE PROPERTY OF HARSCO TRACK TECHNOLOGIES. BY ACCEPTING THIS DRAWING OR DOCUMENT, THE RECIPIENT AGREES (1) NOT TO PROVIDE, OR OTHERWISE MAKE AVAILABLE, THE DRAWING OR DOCUMENT, OR ANY INFORMATION OR KNOW-HOW EMBODIED THEREIN, TO ANY THIRD PARTY AND (2) NOT TO REPRODUCE OR USE THE DRAWING OR DOCUMENT TO MANUFACTURE ANY APPARATUS OR DEVICE, WITHOUT THE PRIOR WRITTEN AUTHORIZATION OF HARSCO TRACK TECHNOLOGIES.

SOLID EDGE DRAWING

IMPLIED TOLERANCES
ALL DIMENSIONS ARE IN INCHES - TOLERANCE UNLESS OTHERWISE SPECIFIED

INCHES - SIZE RANGE		INCH PLUS OR MINUS 1 PLACE DECIMAL	INCH PLUS OR MINUS 2 PLACE DECIMAL	MM - SIZE RANGE		METRIC PLUS OR MINUS 1 PLACE DECIMAL	METRIC PLUS OR MINUS 2 PLACE DECIMAL
OVER	10			OVER	10		
0	6	.03	.005	0	150	.8	.13
6	24	.04	.008	150	600	1.0	.20
24	-	.06	.010	-	600	1.5	.25

UNLESS OTHERWISE SPECIFIED ALL MACHINED SURFACES WILL HAVE:
A SURFACE FINISH OF 125 MICROINCHES
ANGULAR TOLERANCE OF ± .50°
CONCENTRICITY WITHIN .010

THIRD ANGLE PROJECTION

UNLESS OTHERWISE SPECIFIED ALL WELDS SHOULD ADHERE TO THE LATEST HTT WELD-ING SPECIFICATION

CHANGE	R/L	REVISION	DATE
101081	A	NEW RELEASE	5/18/07
101152	B	ITEM 2 QTY. WAS 11. ITEM 78 QTY. WAS 2. IT. 4 WAS BLANK. IT. 27 QTY WAS 5	7/18/07

Description: PDB ASSEMBLY
Drawing Number: ----------
Machine Type: MARK VI (N Z) 2007
Model: 4013837.dft
Drawn: wayrier 5/18/07
Weight:
Scale: 1:4
APVD Dwg: WG APVD Chkg: JR
Mat'l:

HTT
Harsco Track Technologies
Harsco
Columbia, SC

Part Number: 4013837 | Size: D | Sheet: 3 of 3

Plotted by jrowell on 8/13/2007 4013837.dft

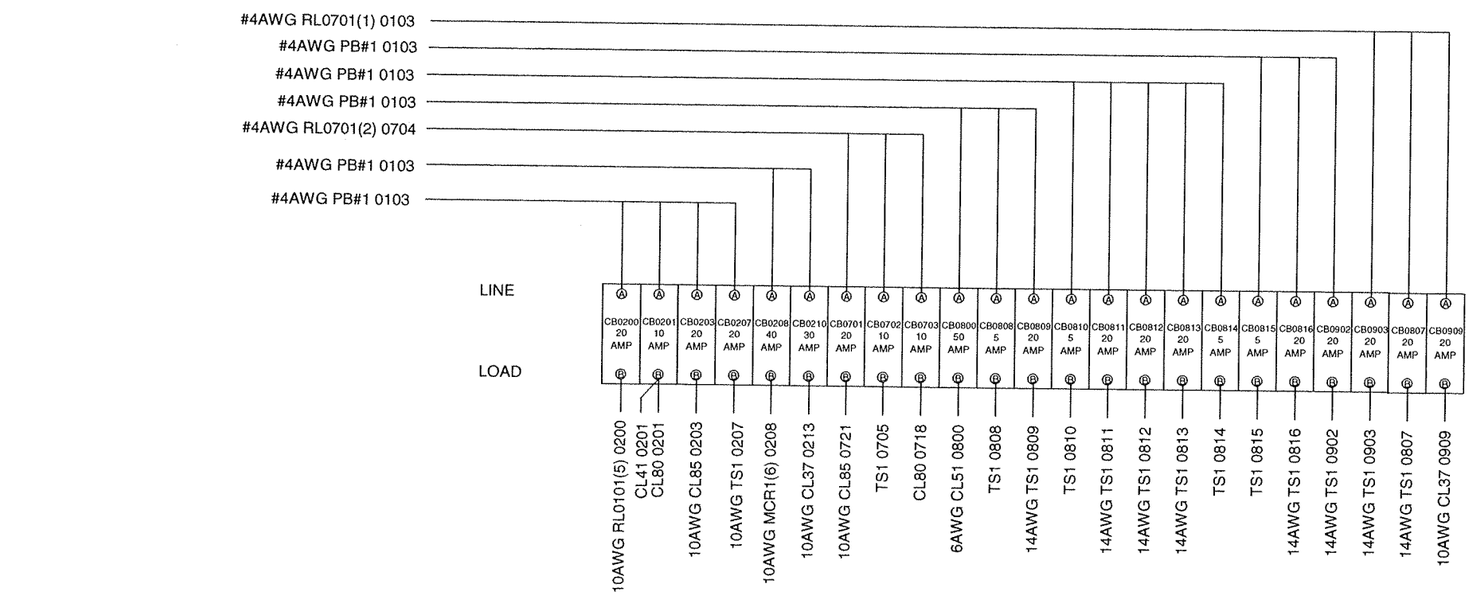

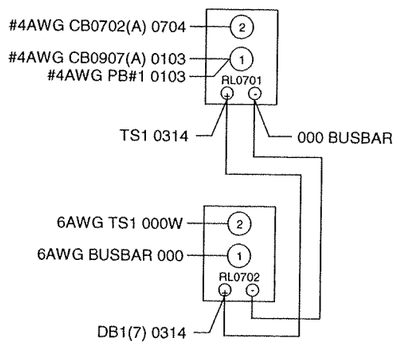

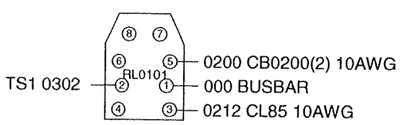

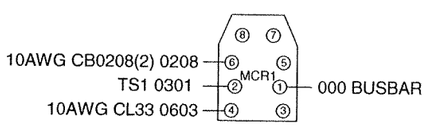

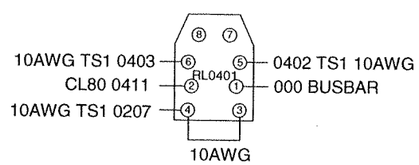

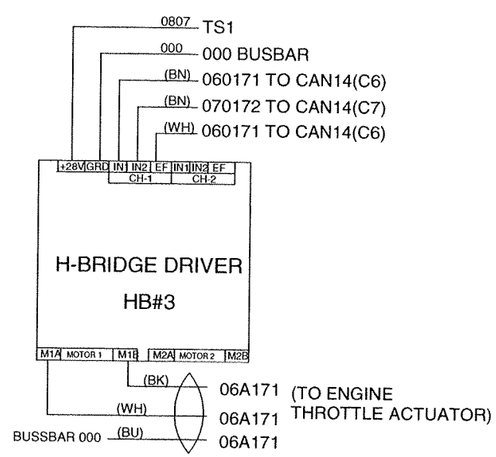

NOTES:
1) PDB ASSEMBLY: 4013837
2) ALL WIRES TO BE #16 AWG UNLESS OTHERWISE NOTED.
3) ALL WIRES 000 TO BUSBAR.

FOR REFERENCE ONLY

CONFIDENTIAL
© COPYRIGHT 2001 HARSCO TRACK TECHNOLOGIES. THIS DRAWING OR DOCUMENT IS THE PROPERTY OF HARSCO TRACK TECHNOLOGIES AND EMBODIES CONFIDENTIAL INFORMATION, TRADE SECRET INFORMATION, AND/OR KNOW-HOW THAT IS THE PROPERTY OF HARSCO TRACK TECHNOLOGIES. BY ACCEPTING THIS DRAWING OR DOCUMENT, THE RECIPIENT AGREES (1) NOT TO PROVIDE, OR OTHERWISE MAKE AVAILABLE, THE DRAWING OR DOCUMENT, OR ANY INFORMATION OR KNOW-HOW EMBODIED THEREIN, TO ANY THIRD PARTY AND (2) NOT TO REPRODUCE OR USE THE DRAWING OR DOCUMENT TO MANUFACTURE ANY APPARATUS OR DEVICE, WITHOUT THE PRIOR WRITTEN AUTHORIZATION OF HARSCO TRACK TECHNOLOGIES.

SOLID EDGE DRAWING

IMPLIED TOLERANCES
ALL DIMENSIONS ARE IN INCHES - TOLERANCE UNLESS OTHERWISE SPECIFIED

INCH NOMINAL FOR RANGE		INCH PLUS OR MINUS 2 PLACE DECIMAL	INCH PLUS OR MINUS 3 PLACE DECIMAL	METRIC NOMINAL FOR RANGE		METRIC PLUS OR MINUS 1 PLACE DECIMAL	METRIC PLUS OR MINUS 2 PLACE DECIMAL
OVER	10			OVER	10		
0	6	.03	.005	0	150	.8	.13
6	24	.04	.008	150	600	1.0	.20
24	-	.05	.010	-	600	1.5	.25

UNLESS OTHERWISE SPECIFIED ALL MACHINED SURFACES WILL HAVE:
A SURFACE FINISH OF 125 MICROINCHES
ANGULAR TOLERANCE OF ± .30°
CONCENTRICITY WITHIN .010

THIRD ANGLE PROJECTION

UNLESS OTHERWISE SPECIFIED ALL WELDS SHOULD ADHERE TO THE LATEST HTT WELDING SPECIFICATION (C)

CHANGE	R/L	REVISION	DATE
101152	A	NEW RELEASE	6/08/07
101213	B	ADDED CL307	8/11/07

Description: PDB WIRING
Drawing Number: ----------
Model: 4013838.dft
Weight:
Scale: 1:4
Machine Type: MARK VI - NZ 2007
Drawn: wgrier
Date Drawn: 6/08/07
APVD Eng: WG
APVD Ctrlg: JR
Part Number: 4013838
Size: D
Sheet: 1 of 2

HTT
Harsco Track Technologies
Harsco
Columbia, SC

Plotted by wgrier on 8/20/2007 4013838.dft

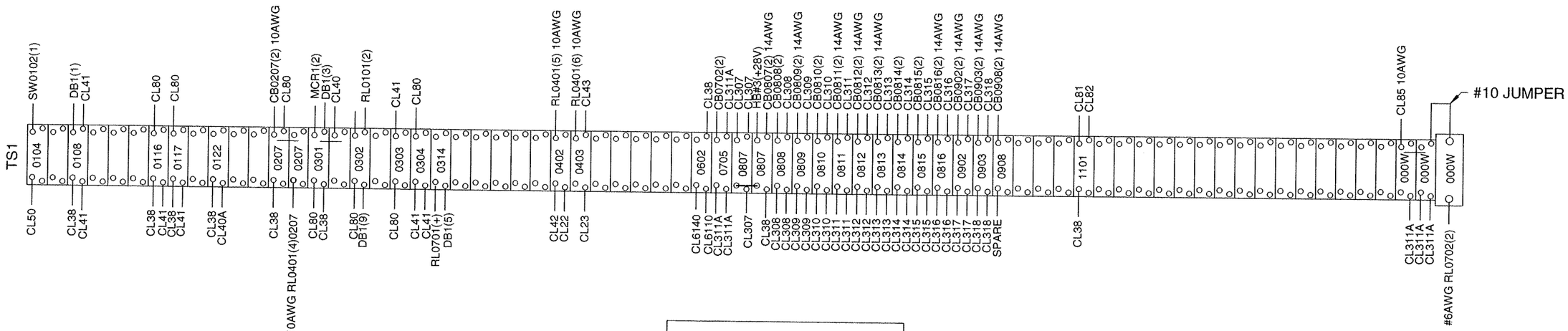

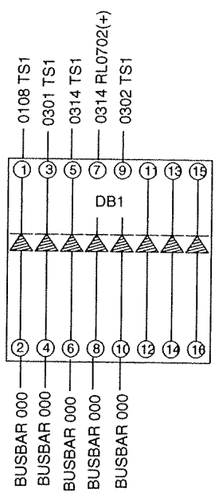

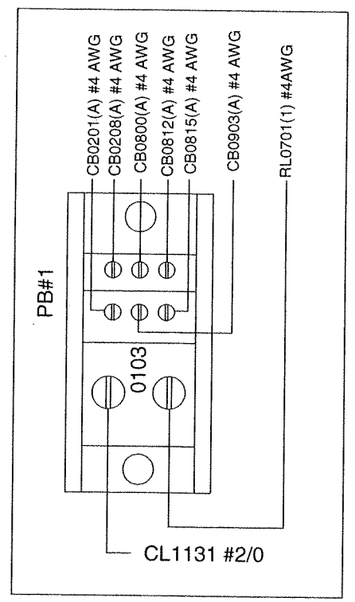

LOCATED ON LH SIDE OF BOX

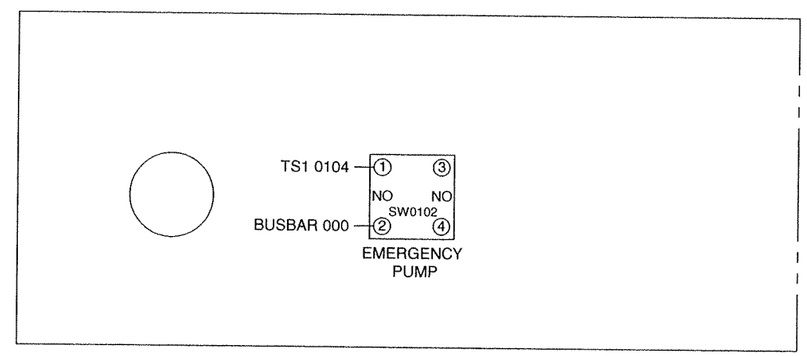

LOCATED ON DOOR

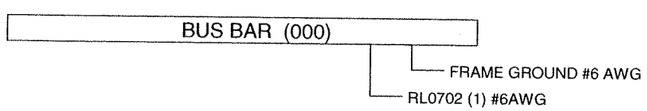

FOR REFERENCE ONLY

CONFIDENTIAL
© COPYRIGHT 2001 HARSCO TRACK TECHNOLOGIES. THIS DRAWING OR DOCUMENT IS THE PROPERTY OF HARSCO TRACK TECHNOLOGIES AND EMBODIES CONFIDENTIAL INFORMATION, TRADE SECRET INFORMATION, AND/OR KNOW-HOW THAT IS THE PROPERTY OF HARSCO TRACK TECHNOLOGIES. BY ACCEPTING THIS DRAWING OR DOCUMENT, THE RECIPIENT AGREES (1) NOT TO PROVIDE, OR OTHERWISE MAKE AVAILABLE, THE DRAWING OR DOCUMENT, OR ANY INFORMATION OR KNOW-HOW EMBODIED THEREIN, TO ANY THIRD PARTY AND (2) NOT TO REPRODUCE OR USE THE DRAWING OR DOCUMENT TO MANUFACTURE ANY APPARATUS OR DEVICE, WITHOUT THE PRIOR WRITTEN AUTHORIZATION OF HARSCO TRACK TECHNOLOGIES.

SOLID EDGE DRAWING

IMPLIED TOLERANCES
ALL DIMENSIONS ARE IN INCHES - TOLERANCE UNLESS OTHERWISE SPECIFIED

NOMINAL SIZE RANGE		INCH PLUS OR MINUS		NOMINAL SIZE RANGE		METRIC PLUS OR MINUS	
OVER	TO	2 PLACE DECIMAL	3 PLACE DECIMAL	OVER	TO	1 PLACE DECIMAL	2 PLACE DECIMAL
0	6	.03	.005	0	150	.8	.13
6	24	.04	.008	150	600	1.0	.20
24	-	.06	.010	-	600	1.5	.25

UNLESS OTHERWISE SPECIFIED ALL MACHINED SURFACES WILL HAVE:
A SURFACE FINISH OF 125 MICROINCHES
ANGULAR TOLERANCE OF ± 30'
CONCENTRICITY WITHIN .010

THIRD ANGLE PROJECTION

UNLESS OTHERWISE SPECIFIED ALL WELDS SHOULD ADHERE TO THE LATEST HTT WELDING SPECIFICATION (s)

CHANGE	R/L	REVISION	DATE
101152	A	NEW RELEASE	6/08/07
101213	B	ADDED CL307	8/11/07

Description: PDB WIRING
Drawing Number: ----------
Model: 4013838.dft
Weight:
Scale: 1:4
Mat'l
Machine Type: MARK VI - NZ 2007
Drawn: wgrier
Date Drawn: 6/08/07
APVD Dwg: WG
APVD Chkng: JR

HTT
Harsco Track Technologies
Harsco
Columbia, SC

Part Number: 4013838
Size: D
Sheet: 2 of 2

Plotted by wgrier on 8/20/2007 4013838.dft

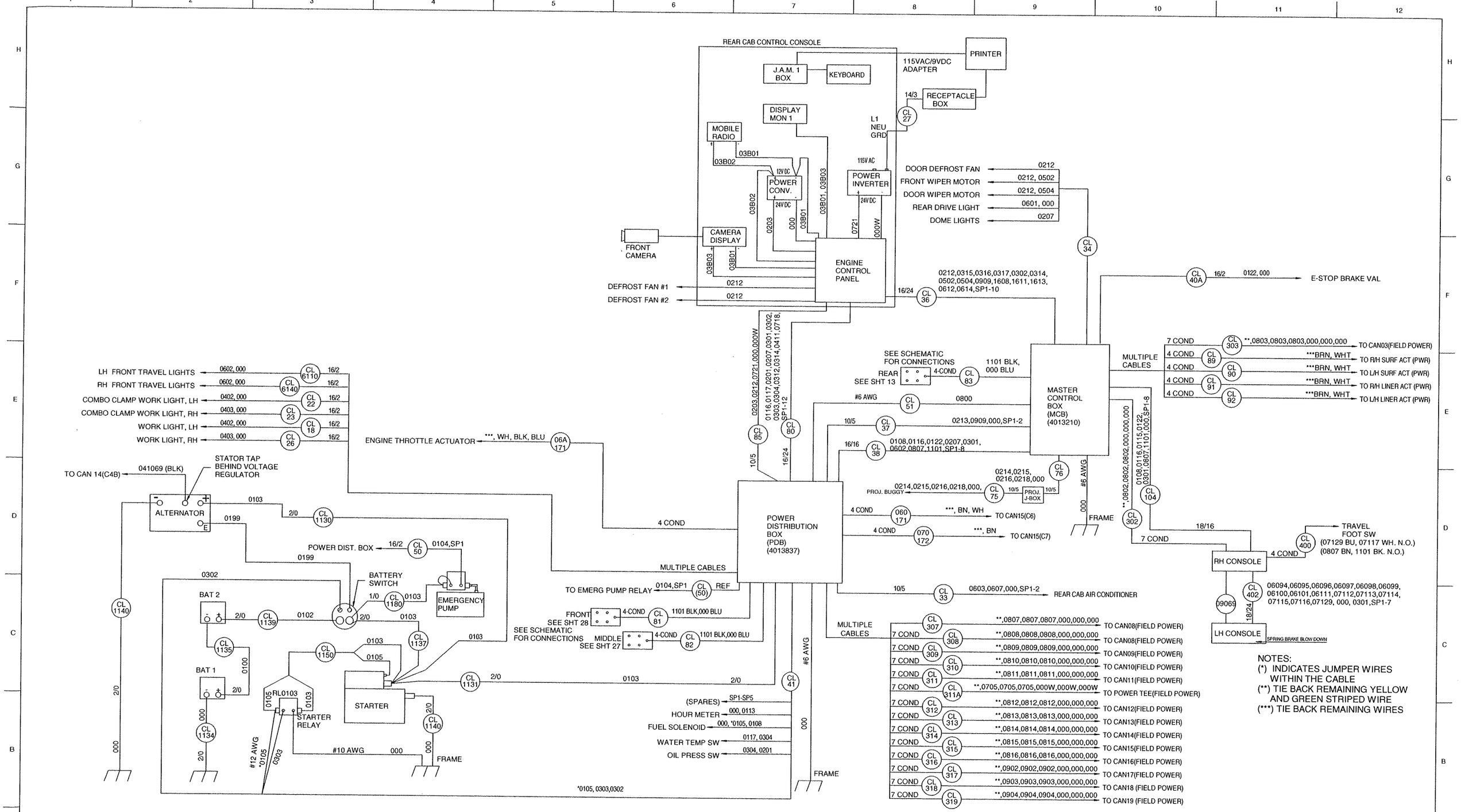

NOTES:
(*) INDICATES JUMPER WIRES WITHIN THE CABLE
(**) TIE BACK REMAINING YELLOW AND GREEN STRIPED WIRE
(***) TIE BACK REMAINING WIRES

CONFIDENTIAL
© COPYRIGHT 2001 HARSCO TRACK TECHNOLOGIES. THIS DRAWING OR DOCUMENT IS THE PROPERTY OF HARSCO TRACK TECHNOLOGIES AND EMBODIES CONFIDENTIAL INFORMATION, TRADE SECRET INFORMATION, AND/OR KNOW-HOW THAT IS THE PROPERTY OF HARSCO TRACK TECHNOLOGIES. BY ACCEPTING THIS DRAWING OR DOCUMENT, THE RECIPIENT AGREES (1) NOT TO PROVIDE, OR OTHERWISE MAKE AVAILABLE, THE DRAWING OR DOCUMENT, OR ANY INFORMATION OR KNOW-HOW EMBODIED THEREIN, TO ANY THIRD PARTY AND (2) NOT TO REPRODUCE OR USE THE DRAWING OR DOCUMENT TO MANUFACTURE ANY APPARATUS OR DEVICE, WITHOUT THE PRIOR WRITTEN AUTHORIZATION OF HARSCO TRACK TECHNOLOGIES.

SOLID EDGE DRAWING

IMPLIED TOLERANCES
ALL DIMENSIONS ARE IN INCHES - TOLERANCE UNLESS OTHERWISE SPECIFIED

NOMINAL SIZE RANGE		INCH PLUS OR MINUS		NOMINAL SIZE RANGE		METRIC PLUS OR MINUS	
OVER	TO	2 PLACE DECIMAL	3 PLACE DECIMAL	OVER	TO	1 PLACE DECIMAL	2 PLACE DECIMAL
0	6	.03	.005	0	150	.8	.13
6	24	.04	.008	150	600	1.0	.20
24	-	.06	.010	-	600	1.5	.25

UNLESS OTHERWISE SPECIFIED ALL MACHINED SURFACES WILL HAVE:
A SURFACE FINISH OF 125 MICROINCHES
ANGULAR TOLERANCE OF ± 30'
CONCENTRICITY WITHIN .010
THIRD ANGLE PROJECTION
UNLESS OTHERWISE SPECIFIED ALL WELDS SHOULD ADHERE TO THE LATEST HTT WELDING SPECIFICATION

CHANGE	R/L	REVISION	DATE
101213	A	NEW RELEASE	7-03-07

Description: CABLE DIAGRAM
Drawing Number: ----------
Model: NONE
Weight:
Scale:
Material:
Machine Type: MARK VI
Drawn: wgrier
Date Drawn: 2-24-06
APVD Dwg: WG
APVD ChDrg: WG

HTT
Harsco Track Technologies
Harsco
Columbia, SC

Part Number: 4013841
Size: D
Sheet: 1 of 1

Plotted by wgrier on 8/15/2007 4013841.dft

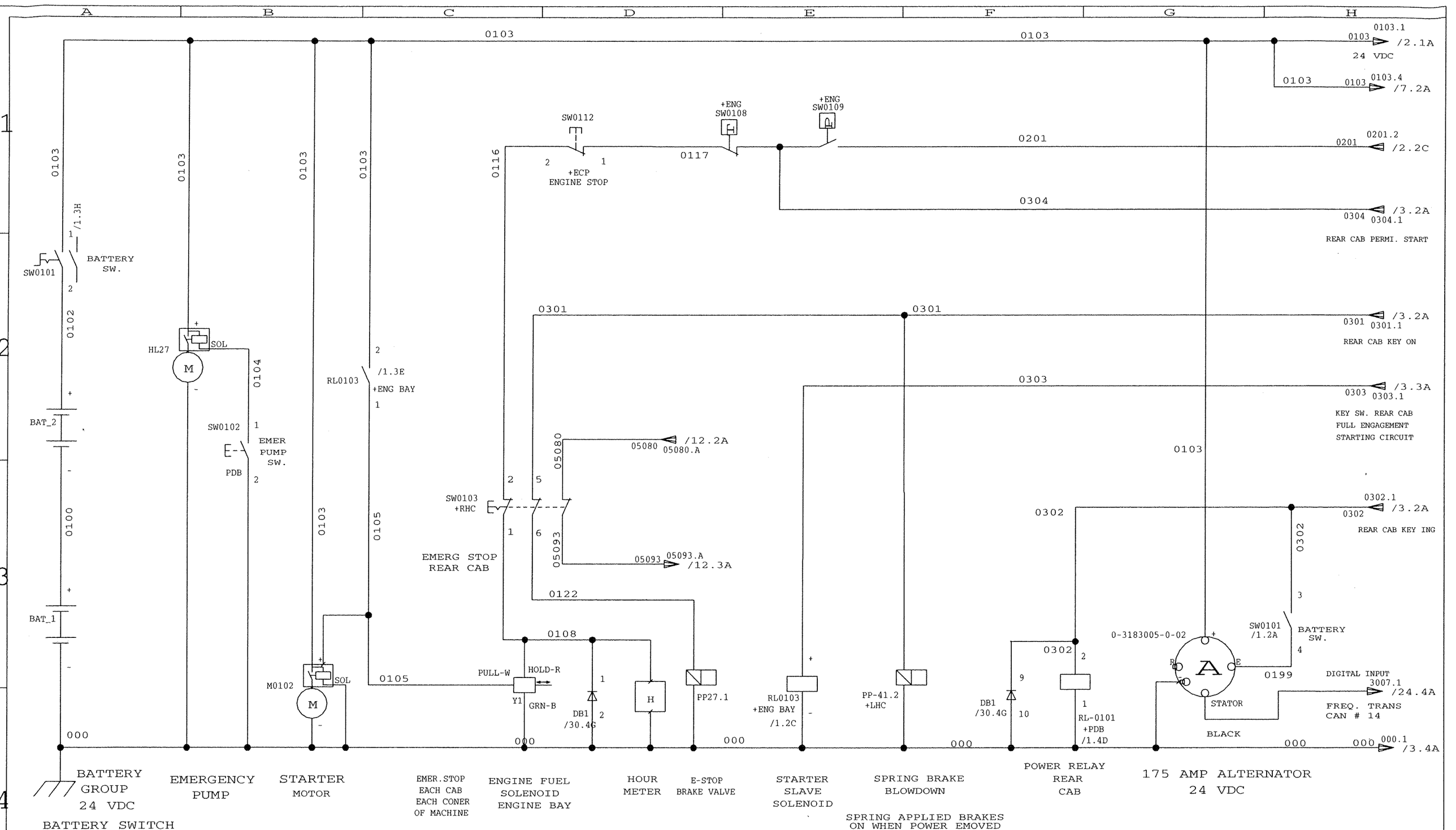

NO	ER	DESCRIPTION	ZONE	DR	CK	APP	MF
1		NEW RELEASE		W.G.			

REVISIONS

THIS DOCUMENT CONTAINS PROPRIETARY INFORMATION AND SUCH INFORMATION MAY NOT BE DISCLOSED TO OTHERS FOR ANY PURPOSE OR USED FOR MANUFACTURING PURPOSES WITHOUT THE WRITTEN PERMISSION OF HARSCO TRACK TECHNOLOGIES

NO	ER	DESCRIPTION	ZONE	DR	CK	APP	MF

LOC
ASS
SHEET 1 OUT OF 30

DRAWN W. GRIER	DATE 7-7-07	FOR REFERENCE ONLY
CHECKED	DATE	
APP-ENG J.R.	DATE 7-7-07	
APP-MFG	DATE	

HTT Harsco Track Technologies
a harsco company
2401 Edmund Road-Box 20
Cayce-West Columbia, South Carolina 29171-0020
(803) 822-9160

DESCRIPTION (30)
ELECT SCHEMATIC

MACHINE TYPE
MK VI , ON TRACK

ENG.DWG.NO.
4013198

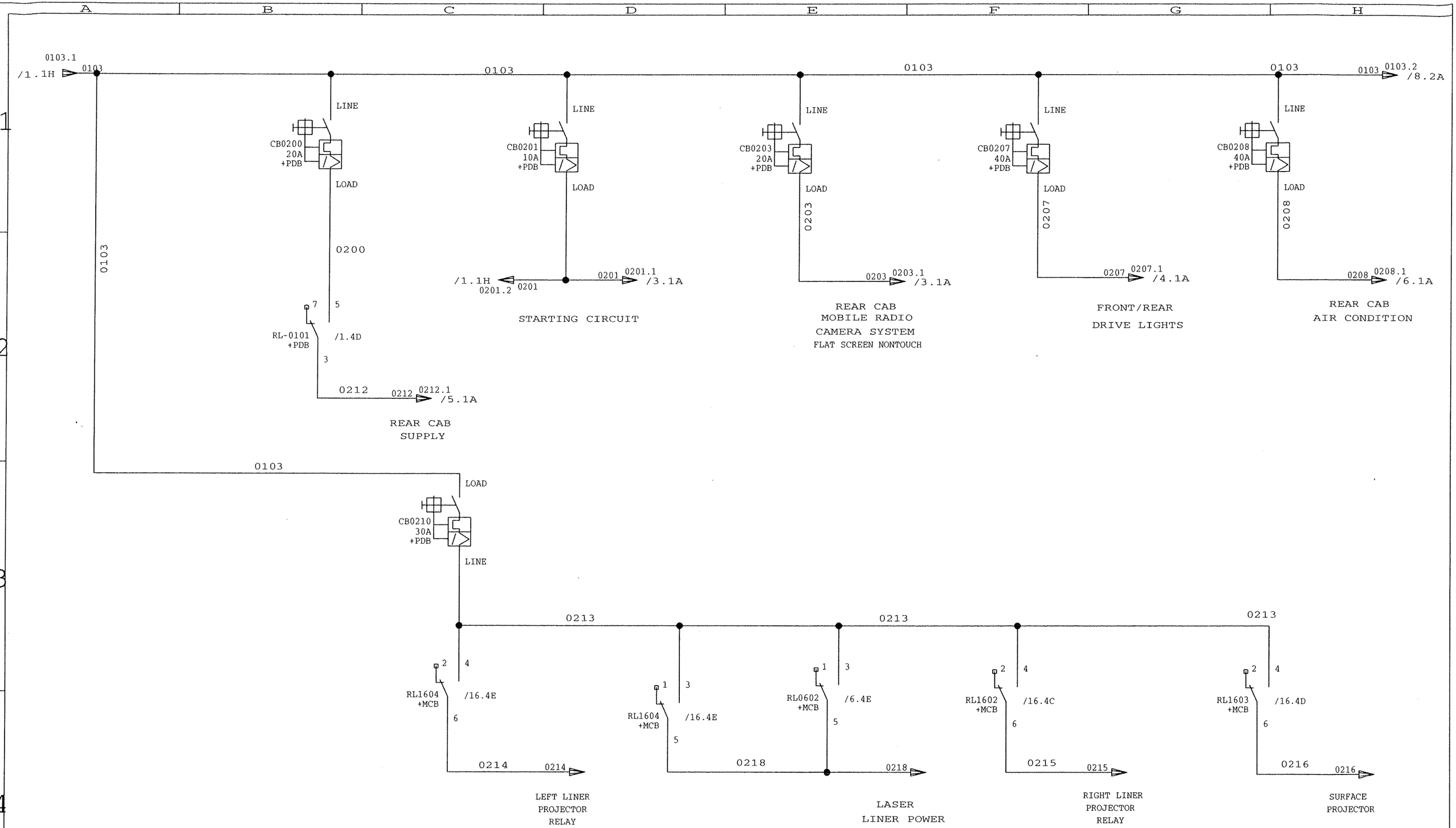

NO	ER	DESCRIPTION	ZONE	DR	CK	APP	MF
1		NEW RELEASE		W.G.			

REVISIONS

THIS DOCUMENT CONTAINS PROPRIETARY INFORMATION AND SUCH INFORMATION MAY NOT BE DISCLOSED TO OTHERS FOR ANY PURPOSE OR USED FOR MANUFACTURING PURPOSES WITHOUT THE WRITTEN PERMISSION OF HARSCO TRACK TECHNOLOGIES

NO	ER	DESCRIPTION	ZONE	DR	CK	APP	MF

LOC
ASS
SHEET 2 OUT OF 30

DRAWN W. GRIER	DATE 7-7-07	FOR REFERENCE ONLY
CHECKED	DATE	
APP-ENG J.R.	DATE 7-7-07	
APP-MFG	DATE	

HTT Harsco Track Technologies
a harsco company
2401 Edmund Road-Box 20
Cayce-West Columbia,
South Carolina 29171-0020
(803) 822-9160

DESCRIPTION (30)
ELECT SCHEMATIC

MACHINE TYPE
MK VI ,ON TRACK

ENG.DWG.NO.
4013198

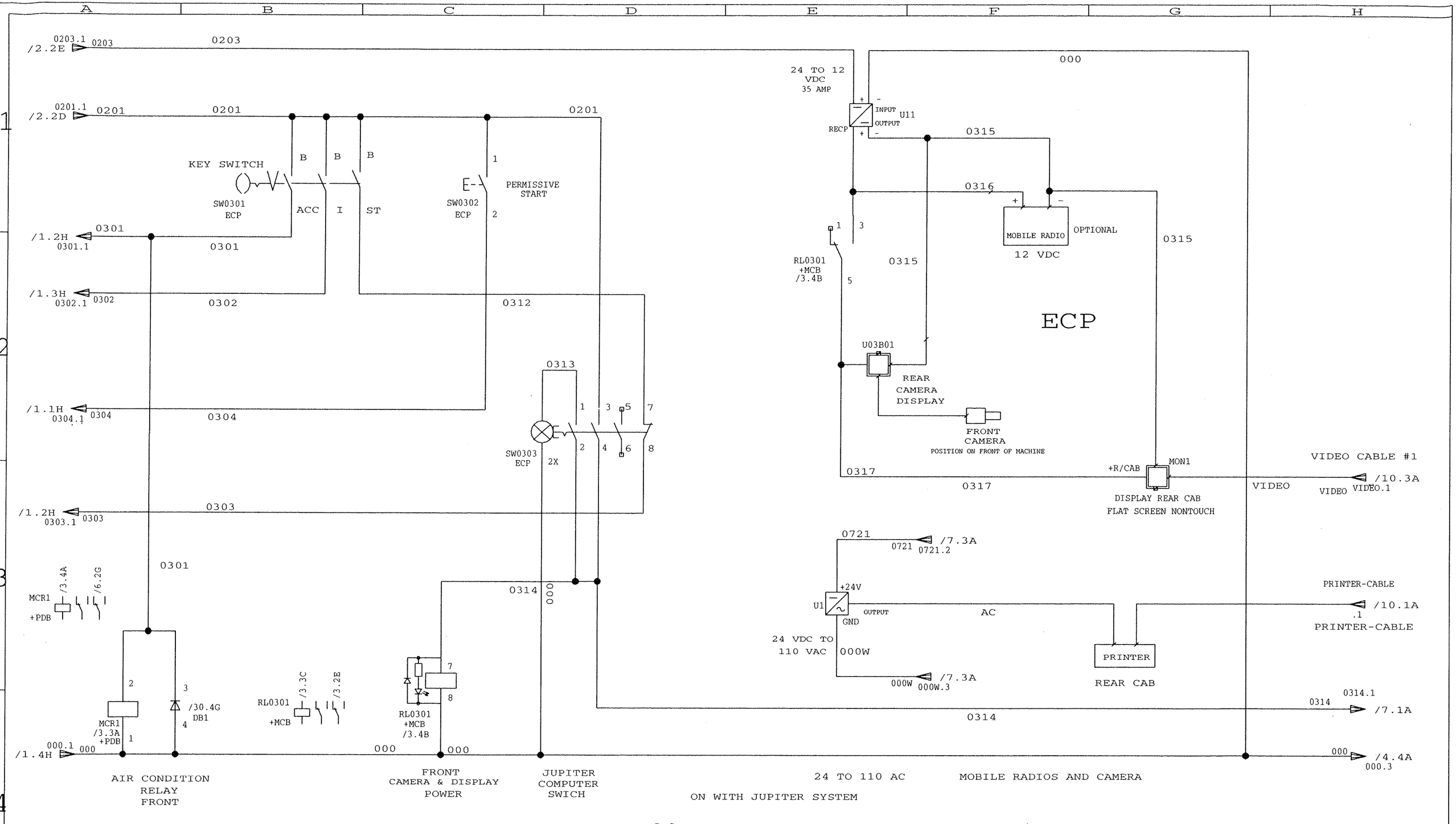

NO	ER	DESCRIPTION	ZONE	DR	CK	APP	MF
1		NEW RELEASE		W.G			

REVISIONS

THIS DOCUMENT CONTAINS PROPRIETARY INFORMATION AND SUCH INFORMATION MAY NOT BE DISCLOSED TO OTHERS FOR ANY PURPOSE OR USED FOR MANUFACTURING PURPOSES WITHOUT THE WRITTEN PERMISSION OF HARSCO TRACK TECHNOLOGIES

NO	ER	DESCRIPTION	ZONE	DR	CK	APP	MF

LOC
ASS
SHEET 3 OUT OF 30

DRAWN W. GRIER	DATE 7-7-07	FOR REFERENCE ONLY
CHECKED	DATE	
APP-ENG J.R.	DATE 7-7-07	
APP-MFG	DATE	

HTT Harsco Track Technologies
a harsco company
2401 Edmund Road-Box 20
Cayce-West Columbia, South Carolina 29171-0020
(803) 822-3160

DESCRIPTION (30)
ELECT SCHEMATIC

MACHINE TYPE
MK VI , ON TRACK

ENG.DWG.NO.
4013198

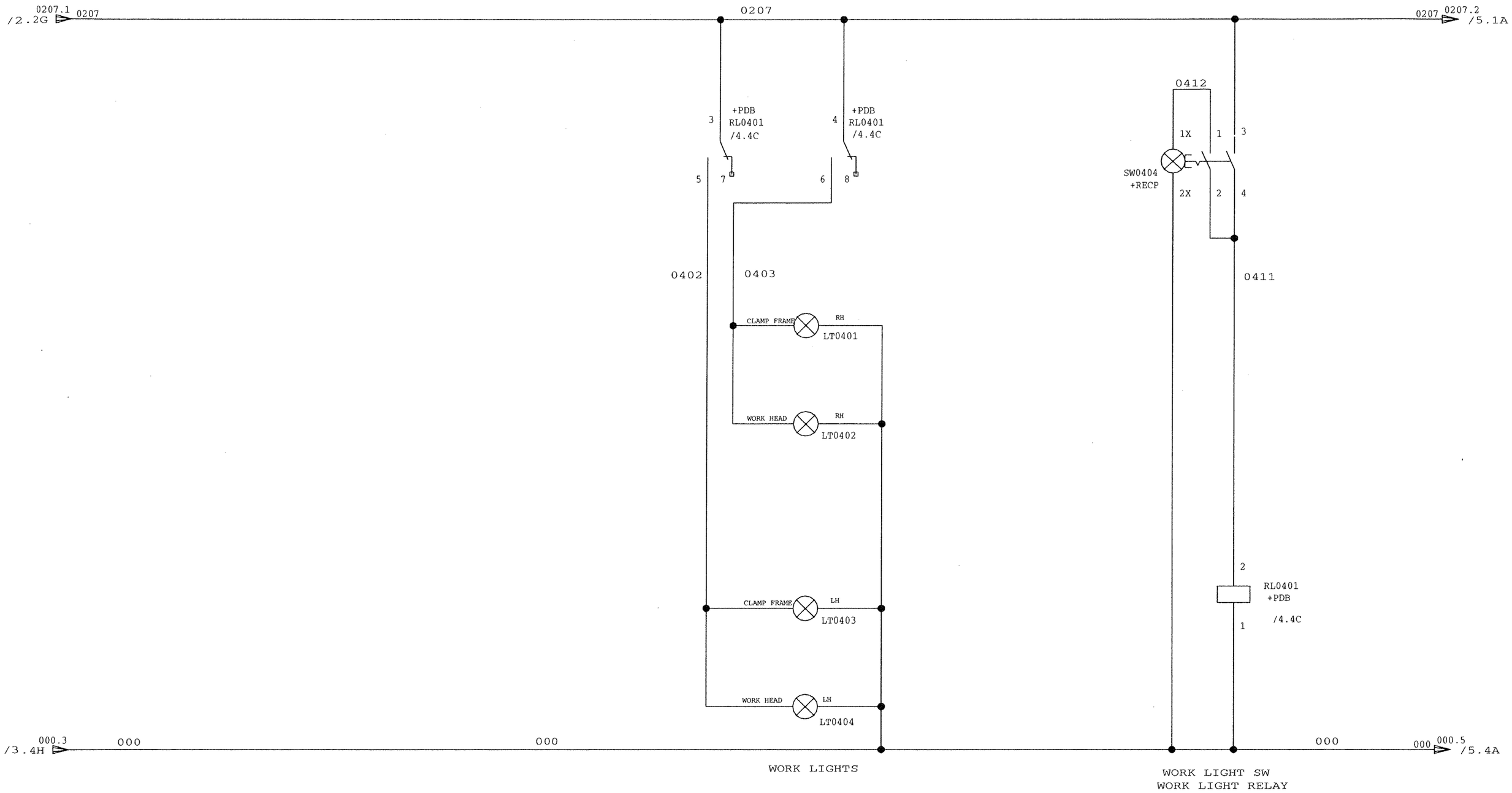

NO	ER	DESCRIPTION	ZONE	DR	CK	APP	MF
1		NEW RELEASE		W.G.			

REVISIONS

THIS DOCUMENT CONTAINS PROPRIETARY INFORMATION AND SUCH INFORMATION MAY NOT BE DISCLOSED TO OTHERS FOR ANY PURPOSE OR USED FOR MANUFACTURING PURPOSES WITHOUT THE WRITTEN PERMISSION OF HARSCO TRACK TECHNOLOGIES

NO	ER	DESCRIPTION	ZONE	DR	CK	APP	MF

RL0401 /4.3H /4.2F /4.2G
+PDB

LOC
ASS
SHEET 4 OUT OF 30

DRAWN W. GRIER	DATE 7-7-07
CHECKED	DATE
APP-ENG J.R.	DATE 7-7-07
APP-MFG	DATE

FOR REFERENCE ONLY

HTT Harsco Track Technologies
a harsco company
2401 Edmund Road-Box 20
Cayce-West Columbia,
South Carolina 29171-0020
(803) 822-9160

DESCRIPTION (30)
ELECT SCHEMATIC

MACHINE TYPE
MK VI,ON TRACK

ENG.DWG.NO.
4013198

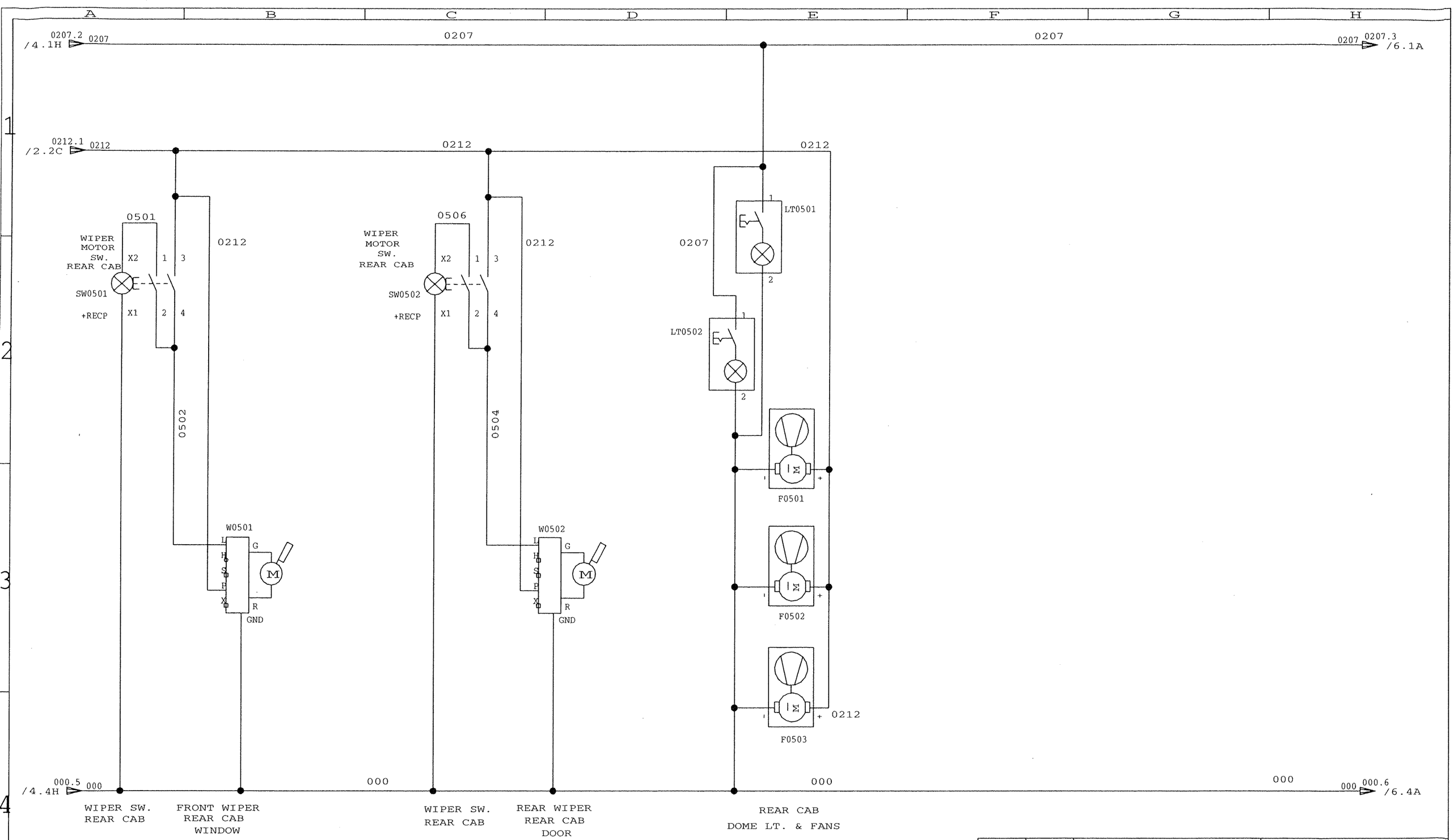

NO	ER	DESCRIPTION	ZONE	DR	CK	APP	MF
1		NEW RELEASE		W.G.			

REVISIONS

THIS DOCUMENT CONTAINS PROPRIETARY INFORMATION AND SUCH INFORMATION MAY NOT BE DISCLOSED TO OTHERS FOR ANY PURPOSE OR USED FOR MANUFACTURING PURPOSES WITHOUT THE WRITTEN PERMISSION OF HARSCO TRACK TECHNOLOGIES

NO	ER	DESCRIPTION	ZONE	DR	CK	APP	MF

LOC
ASS
SHEET 5 OUT OF 30

DRAWN W. GRIER	DATE 7-7-07	FOR REFERENCE ONLY
CHECKED	DATE	
APP-ENG J.R.	DATE 7-7-07	
APP-MFG	DATE	

HTT Harsco Track Technologies
a harsco company
2401 Edmund Road-Box 20
Cayce-West Columbia,
South Carolina 29171-0020
(803) 822-9160

DESCRIPTION (30)
ELECT SCHEMATIC

MACHINE TYPE
MK VI, ON TRACK

ENG.DWG.NO.
4013198

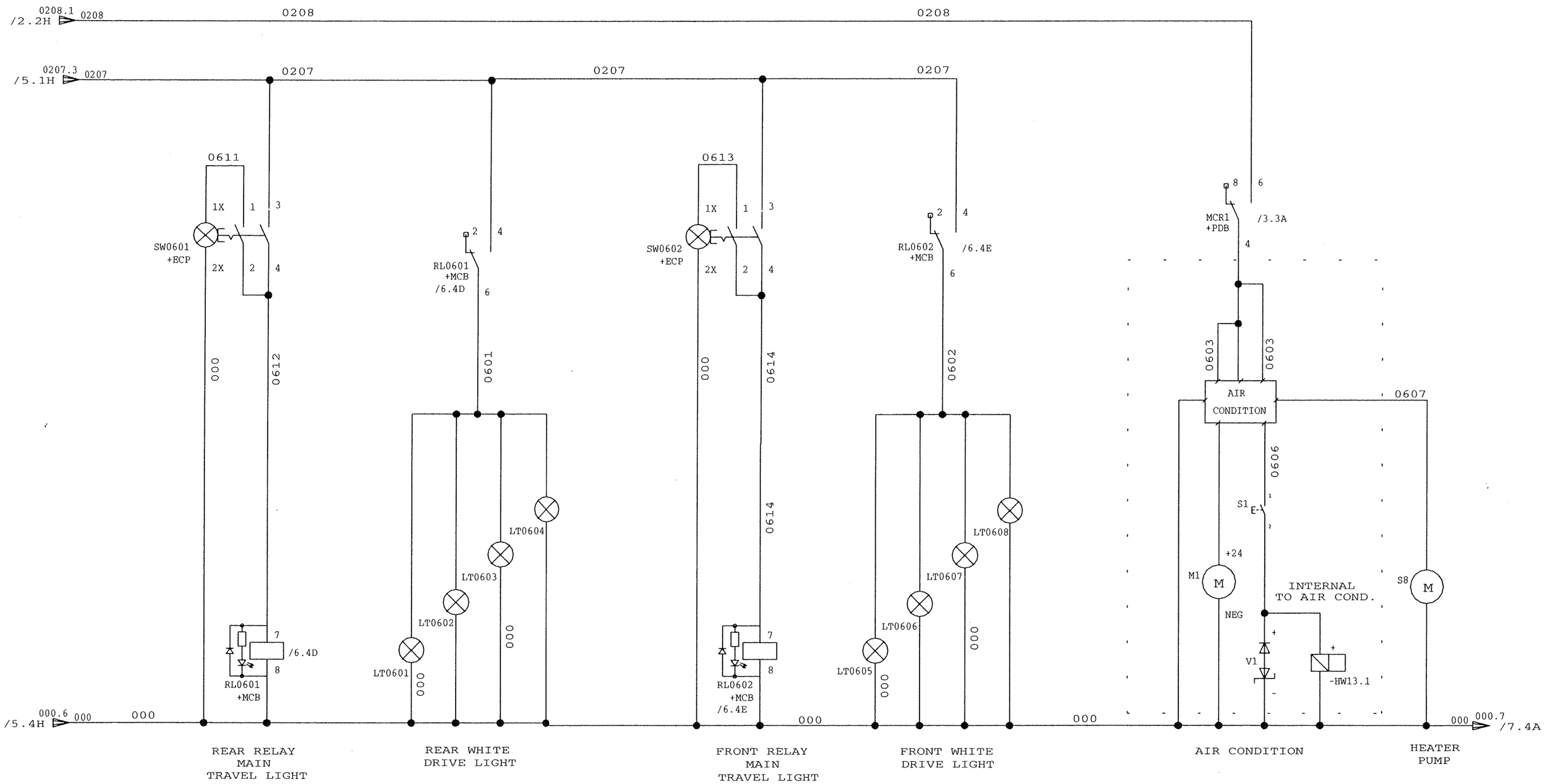

NO	ER	DESCRIPTION	ZONE	DR	CK	APP	MF
1		NEW RELEASE		W.G.			

REVISIONS

THIS DOCUMENT CONTAINS PROPRIETARY INFORMATION AND SUCH INFORMATION MAY NOT BE DISCLOSED TO OTHERS FOR ANY PURPOSE OR USED FOR MANUFACTURING PURPOSES WITHOUT THE WRITTEN PERMISSION OF HARSCO TRACK TECHNOLOGIES

NO	ER	DESCRIPTION	ZONE	DR	CK	APP	MF

RL0601 /6.3B /6.2C +MCB

RL0602 /6.3D /6.2E /2.3E +MCB

LOC
ASS
SHEET 6 OUT OF 30

DRAWN W. GRIER	DATE 7-7-07	FOR REFERENCE ONLY
CHECKED	DATE	
APP-ENG J.R.	DATE 7-7-07	
APP-MFG	DATE	

HTT Harsco Track Technologies
a harsco company
2401 Edmund Road-Box 20
Cayce-West Columbia,
South Carolina 29171-0020
(803) 822-9160

DESCRIPTION (30)
ELECT SCHEMATIC

MACHINE TYPE
MK VI, ON TRACK

ENG.DWG.NO.
4013198

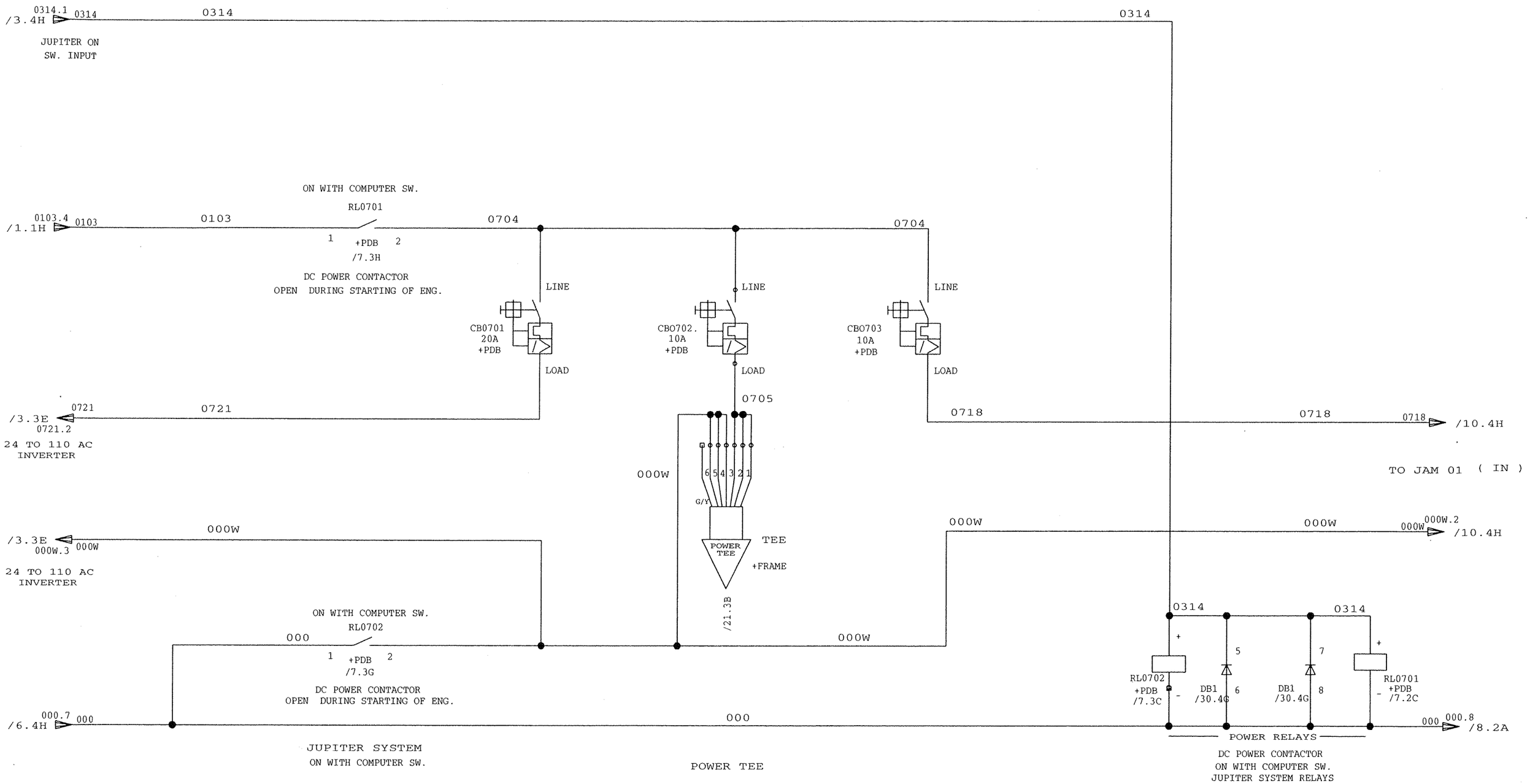

NO	ER	DESCRIPTION	ZONE	DR	CK	APP	MF
1		NEW RELEASE		W.G.			

REVISIONS

THIS DOCUMENT CONTAINS PROPRIETARY INFORMATION AND SUCH INFORMATION MAY NOT BE DISCLOSED TO OTHERS FOR ANY PURPOSE OR USED FOR MANUFACTURING PURPOSES WITHOUT THE WRITTEN PERMISSION OF HARSCO TRACK TECHNOLOGIES

NO	ER	DESCRIPTION	ZONE	DR	CK	APP	MF

LOC
ASS
SHEET 7 OUT OF 30

DRAWN W. GRIER	DATE 7-7-07	FOR REFERENCE ONLY
CHECKED	DATE	
APP-ENG J.R.	DATE 7-7-07	
APP-MFG	DATE	

HTT Harsco Track Technologies
a harsco company
2401 Edmund Road-Box 20
Cayce-West Columbia,
South Carolina 29171-0020
(803) 822-9160

DESCRIPTION (30)
ELECT SCHEMATIC

MACHINE TYPE
MK VI , ON TRACK

ENG.DWG.NO.
4013198

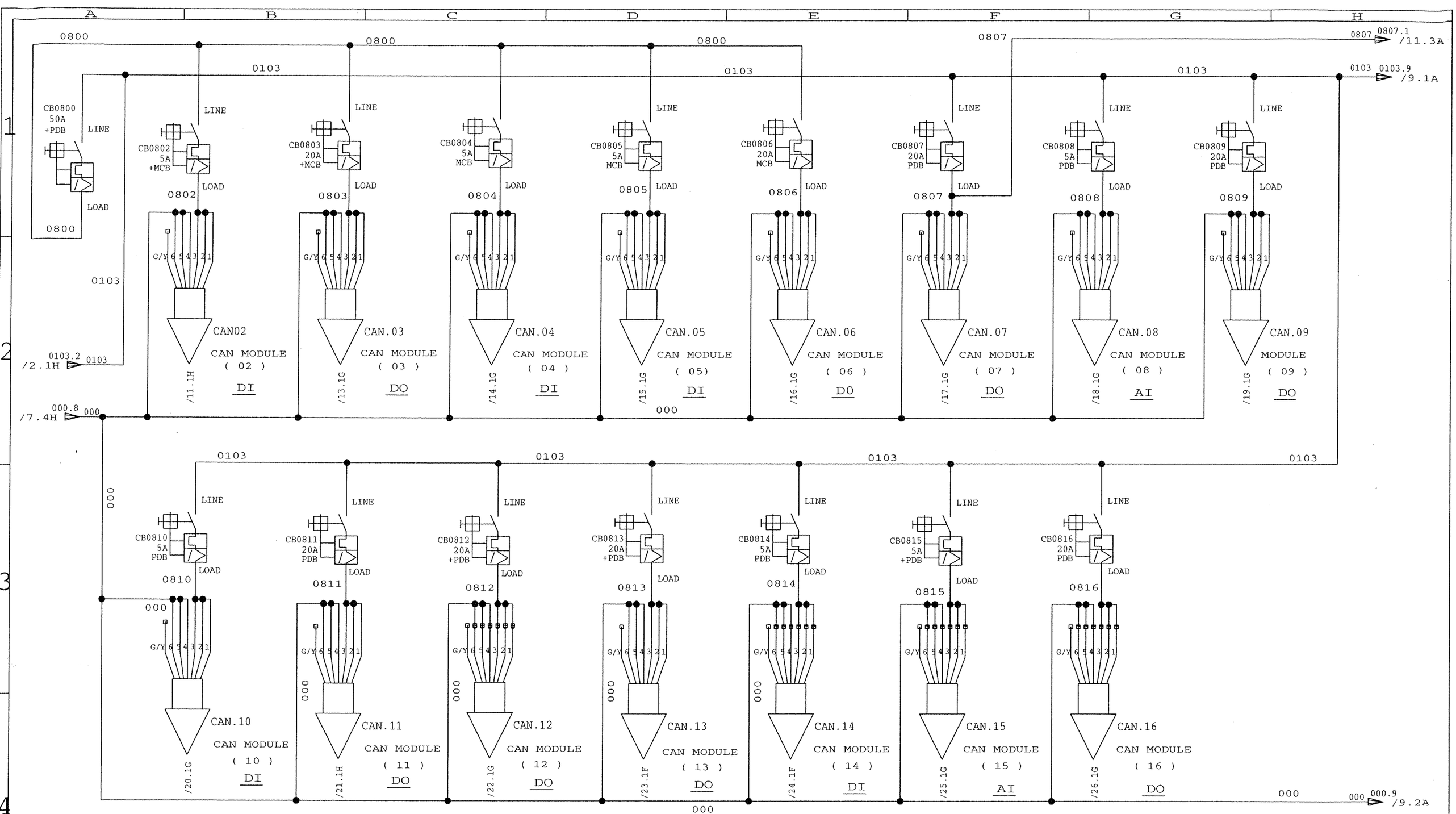

NO	ER	DESCRIPTION	ZONE	DR	CK	APP	MF
1		NEW RELEASE		W.G.			

REVISIONS

THIS DOCUMENT CONTAINS PROPRIETARY INFORMATION AND SUCH INFORMATION MAY NOT BE DISCLOSED TO OTHERS FOR ANY PURPOSE OR USED FOR MANUFACTURING PURPOSES WITHOUT THE WRITTEN PERMISSION OF HARSCO TRACK TECHNOLOGIES

NO	ER	DESCRIPTION	ZONE	DR	CK	APP	MF

LOC
ASS
SHEET 8 OUT OF 30

DRAWN W. GRIER	DATE 7-7-07	FOR REFERENCE ONLY
CHECKED	DATE	
APP-ENG J.R.	DATE 7-7-07	
APP-MFG	DATE	

HTT Harsco Track Technologies
a harsco company
2401 Edmund Road-Box 20
Cayce-West Columbia,
South Carolina 29171-0020
(803) 822-9160

DESCRIPTION (30)
ELECT SCHEMATIC

MACHINE TYPE
MK VI , ON TRACK

ENG.DWG.NO.
4013198

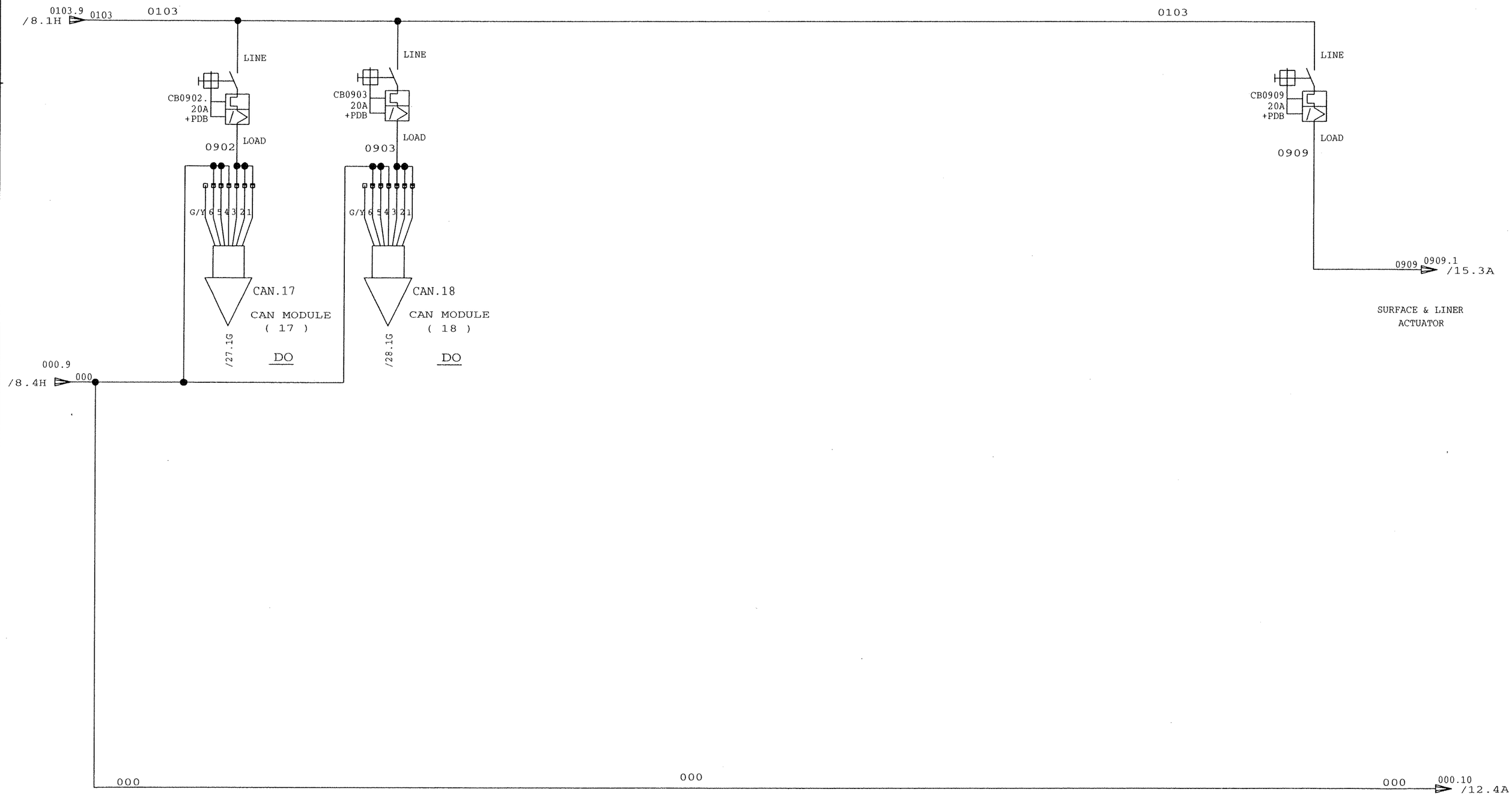

NO	ER	DESCRIPTION	ZONE	DR	CK	APP	MF
1		NEW RELEASE		W.G.			

REVISIONS

THIS DOCUMENT CONTAINS PROPRIETARY INFORMATION AND SUCH INFORMATION MAY NOT BE DISCLOSED TO OTHERS FOR ANY PURPOSE OR USED FOR MANUFACTURING PURPOSES WITHOUT THE WRITTEN PERMISSION OF HARSCO TRACK TECHNOLOGIES

NO	ER	DESCRIPTION	ZONE	DR	CK	APP	MF

LOC
ASS
SHEET 9 OUT OF 30

DRAWN W. GRIER	DATE 7-7-07	FOR REFERENCE ONLY	DESCRIPTION (30) ELECT SCHEMATIC
CHECKED	DATE		MACHINE TYPE MK VI , ON TRACK
APP-ENG J.R.	DATE 7-7-07		ENG.DWG.NO. 4013198
APP-MFG	DATE		

HTT Harsco Track Technologies
a harsco company
2401 Edmund Road-Box 20
Cayce-West Columbia,
South Carolina 29171-0020
(803) 822-9160

JAM BOX & P42 BOARD

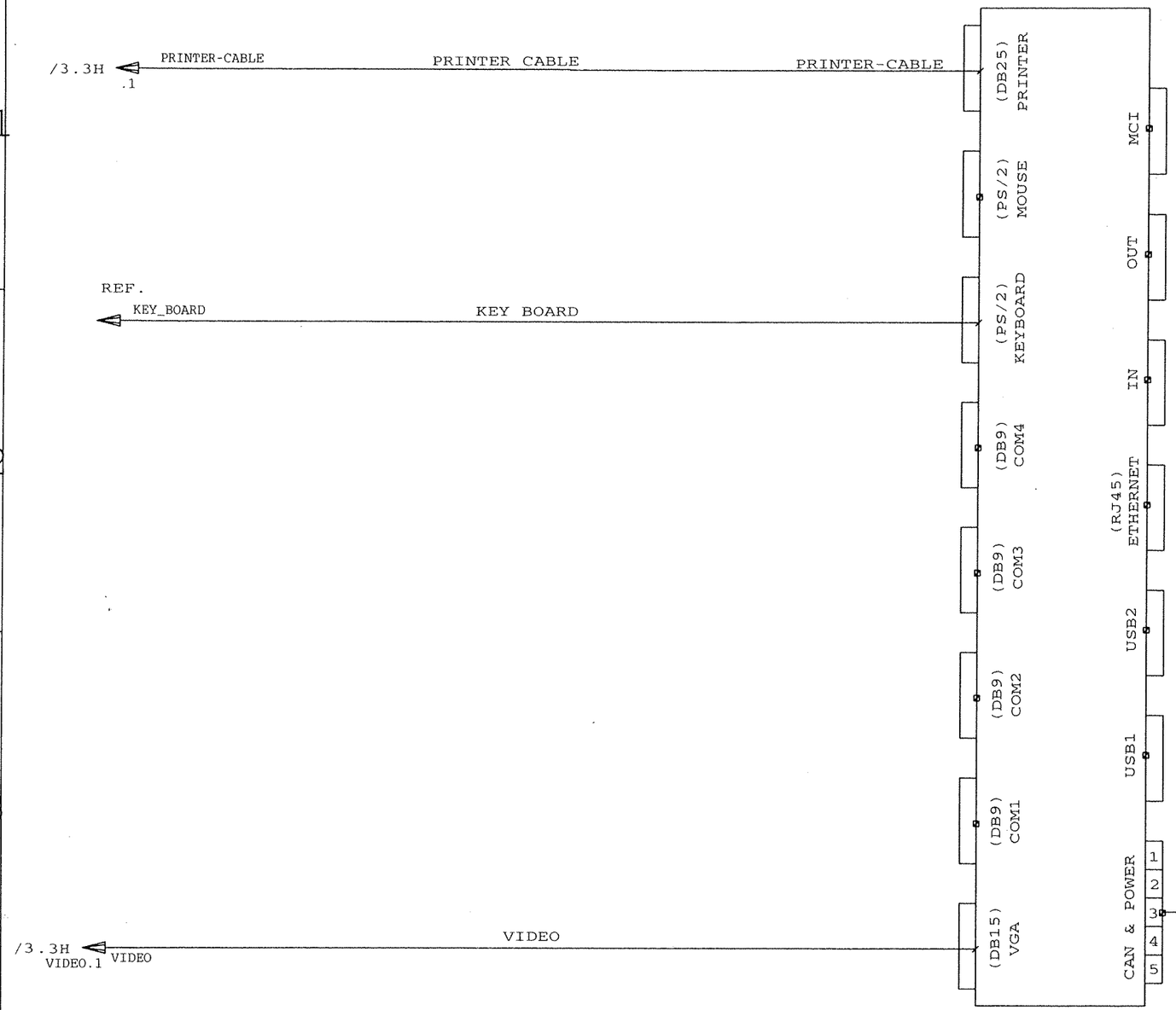

SHIELD	10
PINK	9
24 VOLT RETURN	8
GRAY	7
YELLOW	6
YE/GN	5
+24 VOLT DC	4
CAN LOW	3
CAN GRD.	2
CAN HIGHT	1

REF.
M23 CONNECTOR PIN OUT

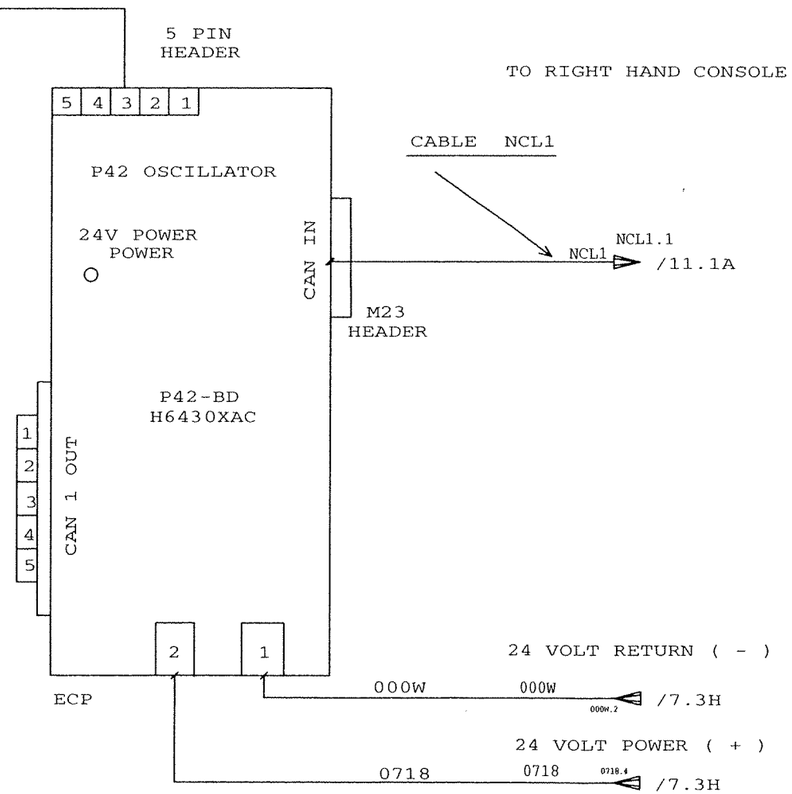

PIN #	COLOR	CLA
1	BLUE	BU
2	WHITE	WH
3	BLACK	BK
4	GREEN	GN
5	RED	RD

POINT TO POINT CONNECTION EACH END

NO	ER	DESCRIPTION	ZONE	DR	CK	APP	MF
1		NEW RELEASE		W.G.			

REVISIONS

THIS DOCUMENT CONTAINS PROPRIETARY INFORMATION AND SUCH INFORMATION MAY NOT BE DISCLOSED TO OTHERS FOR ANY PURPOSE OR USED FOR MANUFACTURING PURPOSES WITHOUT THE WRITTEN PERMISSION OF HARSCO TRACK TECHNOLOGIES

NO	ER	DESCRIPTION	ZONE	DR	CK	APP	MF

LOC
ASS
SHEET 10 OUT OF 30

DRAWN W. GRIER	DATE 7-7-07	FOR REFERENCE ONLY
CHECKED	DATE	
APP-ENG J.R.	DATE 7-7-07	
APP-MFG	DATE	

HTT Harsco Track Technologies
a harsco company
2401 Edmund Road-Box 20
Cayce-West Columbia,
South Carolina 29171-0020
(803) 822-9160

DESCRIPTION (30)
ELECT SCHEMATIC

MACHINE TYPE
MK VI , ON TRACK

ENG.DWG.NO.
4013198

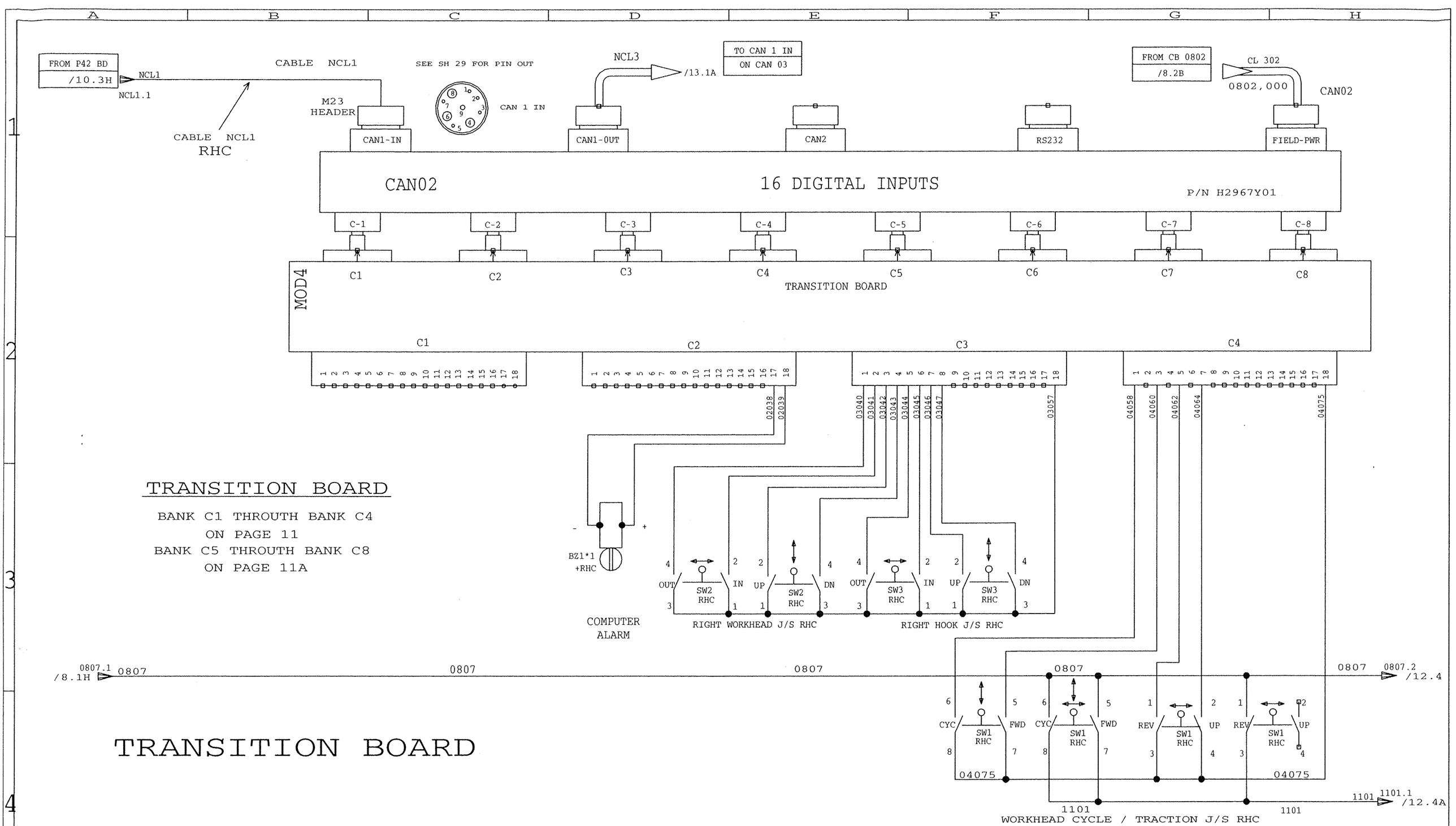

TRANSITION BOARD

BANK C1 THROUTH BANK C4
ON PAGE 11
BANK C5 THROUTH BANK C8
ON PAGE 11A

TRANSITION BOARD

NO	ER	DESCRIPTION	ZONE	DR	CK	APP	MF
1		NEW RELEASE		W.G.			

REVISIONS

THIS DOCUMENT CONTAINS PROPRIETARY INFORMATION AND SUCH INFORMATION MAY NOT BE DISCLOSED TO OTHERS FOR ANY PURPOSE OR USED FOR MANUFACTURING PURPOSES WITHOUT THE WRITTEN PERMISSION OF HARSCO TRACK TECHNOLOGIES

NO	ER	DESCRIPTION	ZONE	DR	CK	APP	MF

LOC
ASS
SHEET 11 OUT OF 30

DRAWN W. GRIER	DATE 7-7-07	FOR REFERENCE ONLY
CHECKED	DATE	
APP-ENG J.R.	DATE 7-7-07	
APP-MFG	DATE	

HTT Harsco Track Technologies
a harsco company
2401 Edmund Road-Box 20
Cayce-West Columbia,
South Carolina 29171-0020
(803) 822-9160

DESCRIPTION (30)
ELECT SCHEMATIC

MACHINE TYPE
MK VI , ON TRACK

ENG.DWG.NO.
4013198

TRANSITION BOARD

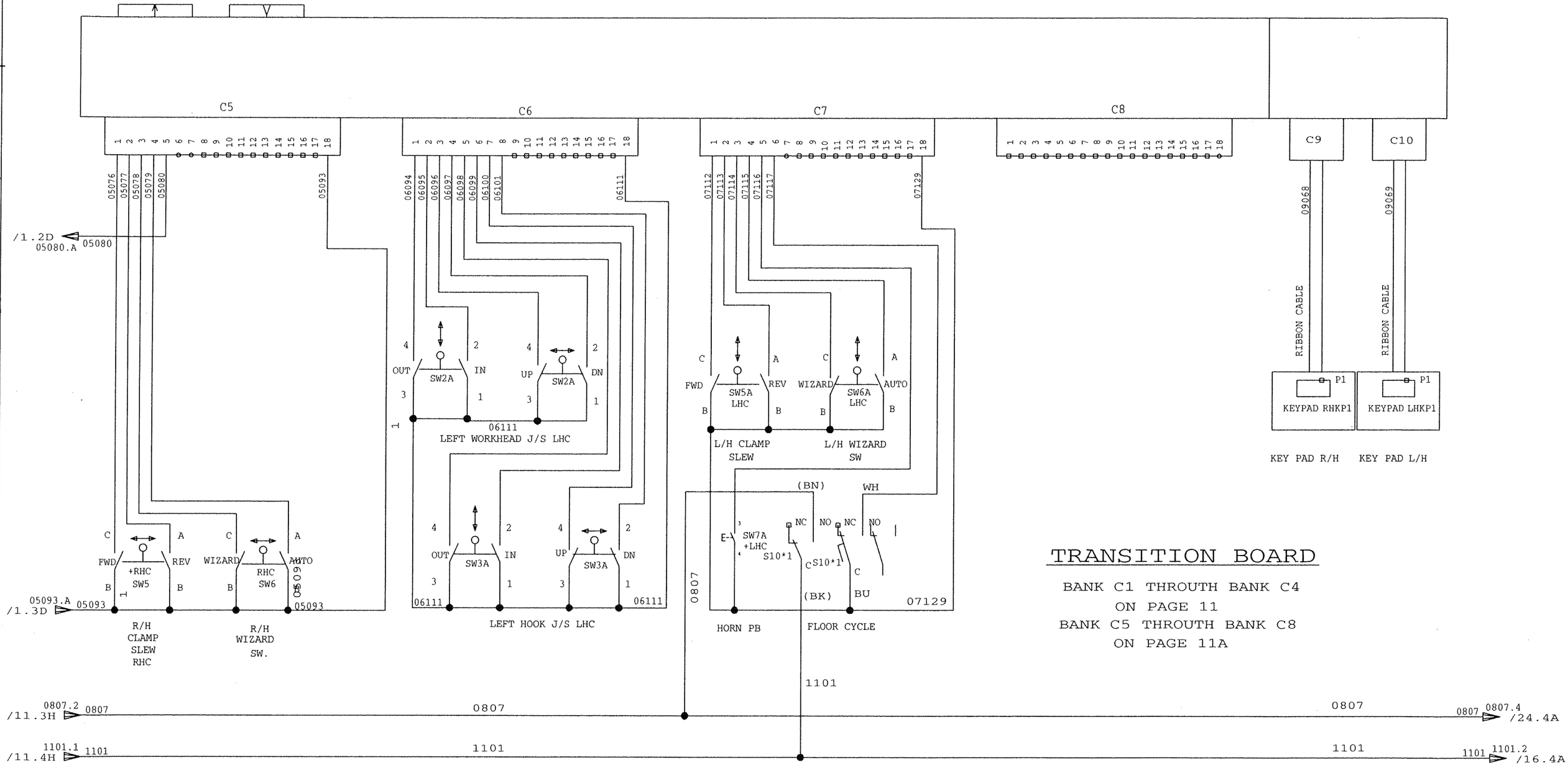

TRANSITION BOARD

BANK C1 THROUTH BANK C4
ON PAGE 11
BANK C5 THROUTH BANK C8
ON PAGE 11A

TRANSITION BOARD

NO	ER	DESCRIPTION	ZONE	DR	CK	APP	MF
1		NEW RELEASE		W.G.			

REVISIONS

THIS DOCUMENT CONTAINS PROPRIETARY INFORMATION AND SUCH INFORMATION MAY NOT BE DISCLOSED TO OTHERS FOR ANY PURPOSE OR USED FOR MANUFACTURING PURPOSES WITHOUT THE WRITTEN PERMISSION OF HARSCO TRACK TECHNOLOGIES

NO	ER	DESCRIPTION	ZONE	DR	CK	APP	MF

LOC
ASS
SHEET 12 OUT OF 30

DRAWN W. GRIER	DATE 7-7-07	FOR REFERENCE ONLY
CHECKED	DATE	
APP-ENG J.R.	DATE 7-7-07	
APP-HFG	DATE	

HTT Harsco Track Technologies
a harsco company
2401 Edmund Road-Box 20
Cayce-West Columbia,
South Carolina 29171-0020
(803) 822-9160

DESCRIPTION (30)
ELECT SCHEMATIC

MACHINE TYPE
MK VI, ON TRACK

ENG.DWG.NO.
4013198

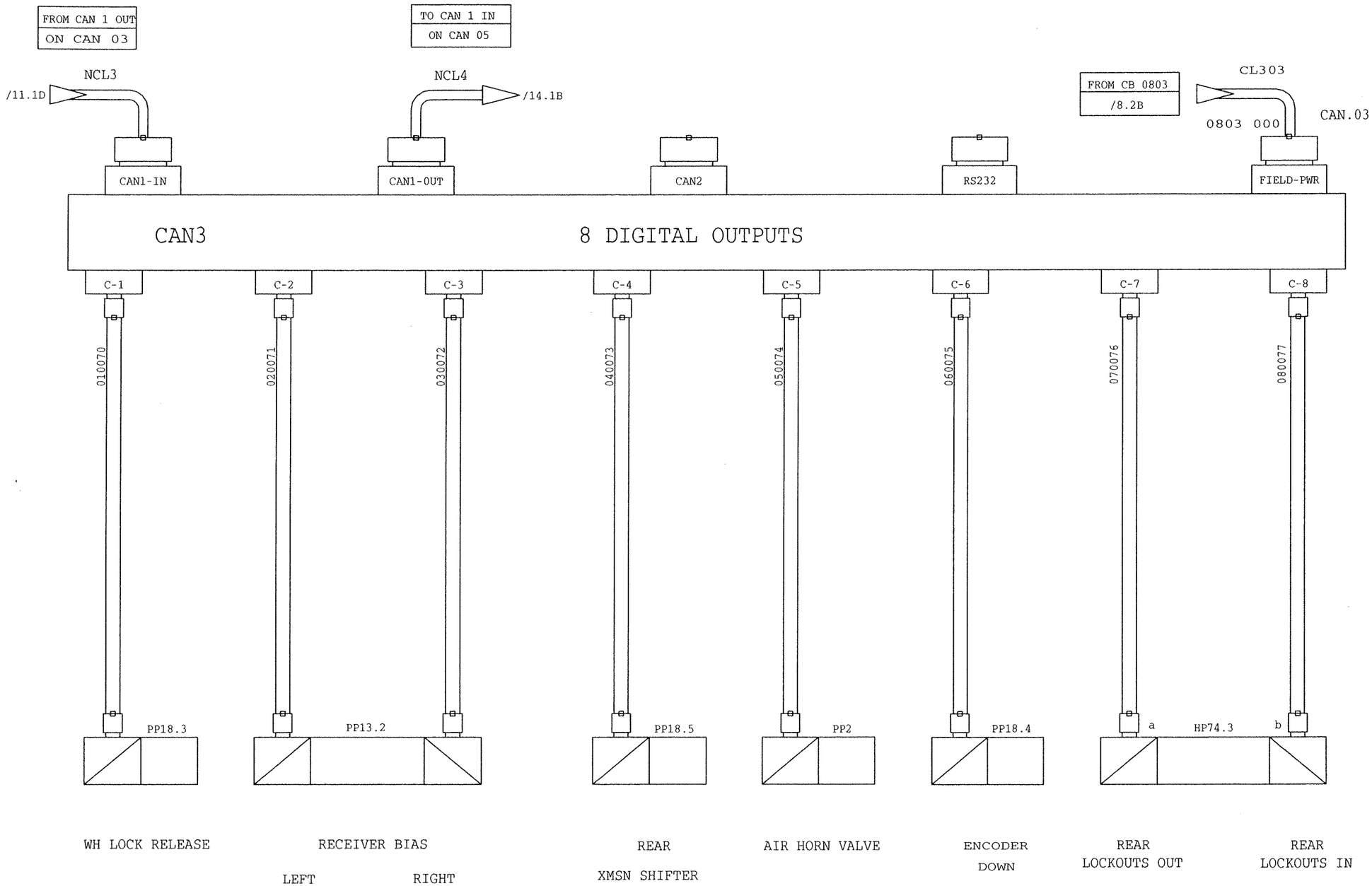

C1 THRU. C8 PIN OUT

PIN NO.	FUNCTION	COLOR	CLR
1	NC		
2	NC		
3	GND / RTN	BLUE	BU
4	OUTPUT	BLACK	BK
5	NC		
HOUSE	PE		

NO	ER	DESCRIPTION	ZONE	DR	CK	APP	MF
1		NEW RELEASE		W.G.			

REVISIONS

THIS DOCUMENT CONTAINS PROPRIETARY INFORMATION AND SUCH INFORMATION MAY NOT BE DISCLOSED TO OTHERS FOR ANY PURPOSE OR USED FOR MANUFACTURING PURPOSES WITHOUT THE WRITTEN PERMISSION OF HARSCO TRACK TECHNOLOGIES

NO	ER	DESCRIPTION	ZONE	DR	CK	APP	MF

LOC
ASS
SHEET 13 OUT OF 30

DRAWN W. GRIER	DATE 7-7-07
CHECKED	DATE
APP-ENG J.R.	DATE 7-7-07
APP-MFG	DATE

FOR REFERENCE ONLY

Harsco Track Technologies
a harsco company
2401 Edmund Road-Box 20
Cayce-West Columbia,
South Carolina 29171-0020
(803) 822-9160

DESCRIPTION (30)
ELECT SCHEMATIC

MACHINE TYPE
MK VI , ON TRACK

ENG.DWG.NO.
4013198

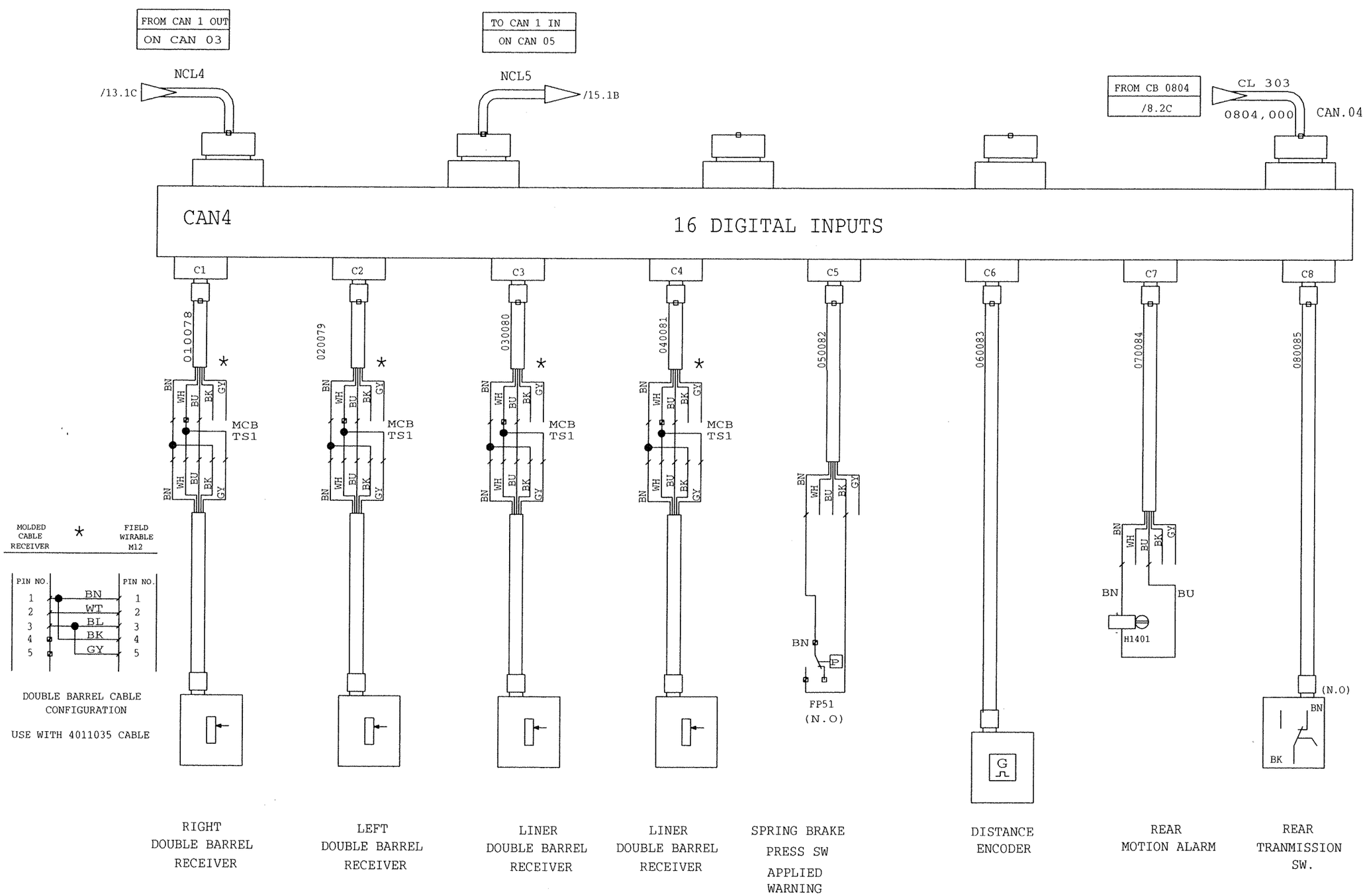

C1 THRU. C8 PIN OUT

PIN NO.	FUNCTION	COLOR	CLR
1	LOAD VOLTAGE SUPPLY	BROWN	BN
2	INPUT SIGNAL B	WHITE	WH
3	GND	BLUE	BU
4	INPUT SIGNAL A	BLACK	BK
5	NC		
HOUSE	PE		

NO	ER	DESCRIPTION	ZONE	DR	CK	APP	MF
1		NEW RELEASE		W.G.			

REVISIONS

THIS DOCUMENT CONTAINS PROPRIETARY INFORMATION AND SUCH INFORMATION MAY NOT BE DISCLOSED TO OTHERS FOR ANY PURPOSE OR USED FOR MANUFACTURING PURPOSES WITHOUT THE WRITTEN PERMISSION OF HARSCO TRACK TECHNOLOGIES

NO	ER	DESCRIPTION	ZONE	DR	CK	APP	MF

LOC
ASS
SHEET 14 OUT OF 30

DRAWN W. GRIER	DATE 7-7-07	FOR REFERENCE ONLY
CHECKED	DATE	
APP-ENG J.R.	DATE 7-7-07	
APP-MFG	DATE	

HTT Harsco Track Technologies
a harsco company
2401 Edmund Road-Box 20
Cayce-West Columbia,
South Carolina 29171-0020
(803) 822-9160

DESCRIPTION (30)
ELECT SCHEMATIC

MACHINE TYPE
MK VI , ON TRACK

ENG.DWG.NO.
4013198

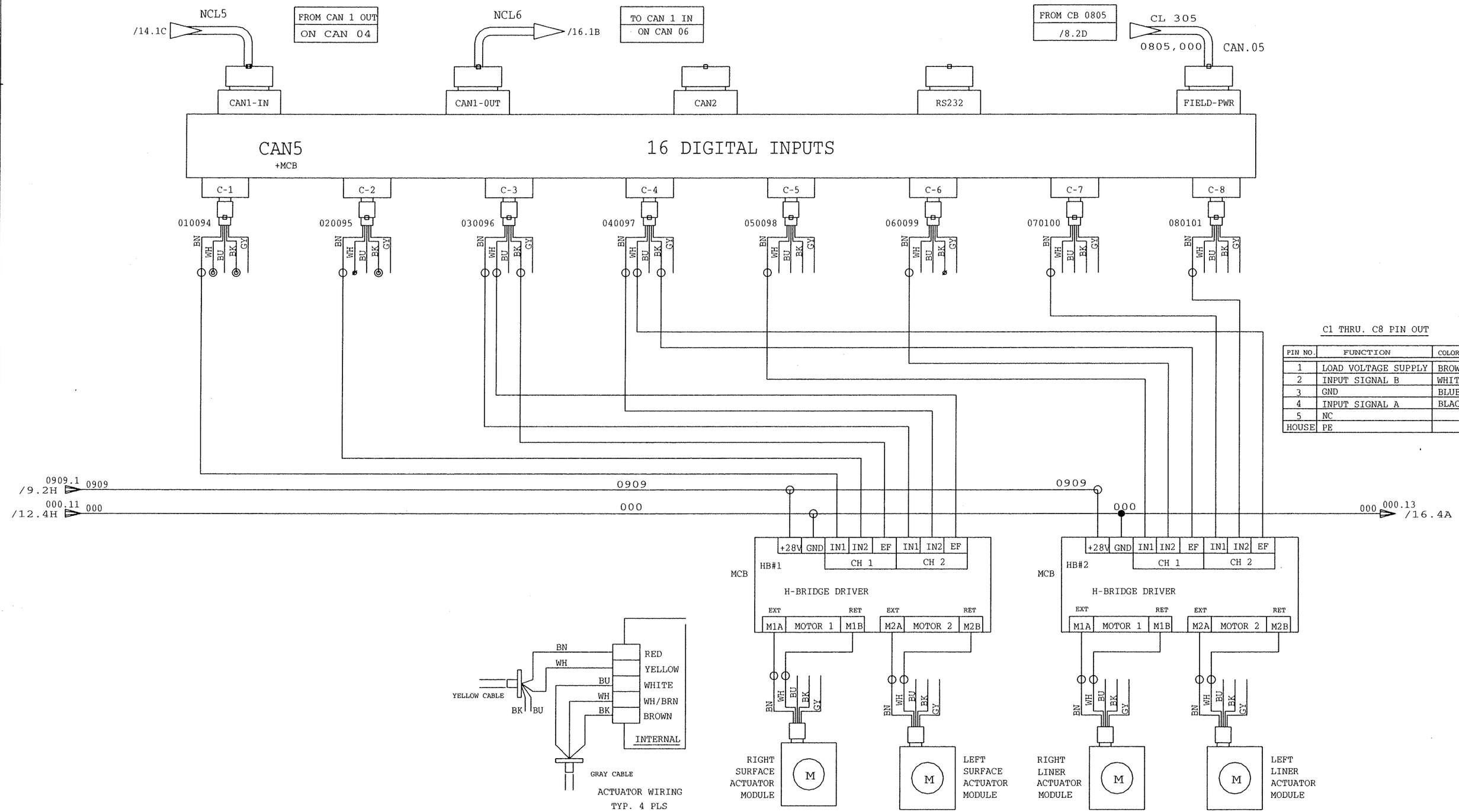

C1 THRU. C8 PIN OUT

PIN NO.	FUNCTION	COLOR	CLR
1	LOAD VOLTAGE SUPPLY	BROWN	BN
2	INPUT SIGNAL B	WHITE	WH
3	GND	BLUE	BU
4	INPUT SIGNAL A	BLACK	BK
5	NC		
HOUSE	PE		

NO	ER	DESCRIPTION	ZONE	DR	CK	APP	MF
1		NEW RELEASE		W.G.			

REVISIONS

THIS DOCUMENT CONTAINS PROPRIETARY INFORMATION AND SUCH INFORMATION MAY NOT BE DISCLOSED TO OTHERS FOR ANY PURPOSE OR USED FOR MANUFACTURING PURPOSES WITHOUT THE WRITTEN PERMISSION OF HARSCO TRACK TECHNOLOGIES

NO	ER	DESCRIPTION	ZONE	DR	CK	APP	MF

LOC
ASS
SHEET 15 OUT OF 30

DRAWN W. GRIER	DATE 7-7-07	FOR REFERENCE ONLY
CHECKED	DATE	
APP-ENG J.R.	DATE 7-7-07	
APP-MFG	DATE	

Harsco Track Technologies
a harsco company
2401 Edmund Road-Box 20
Cayce-West Columbia,
South Carolina 29171-0020
(803) 822-9160

DESCRIPTION (30)
ELECT SCHEMATIC

MACHINE TYPE
MK VI , ON TRACK

ENG.DWG.NO.
4013198

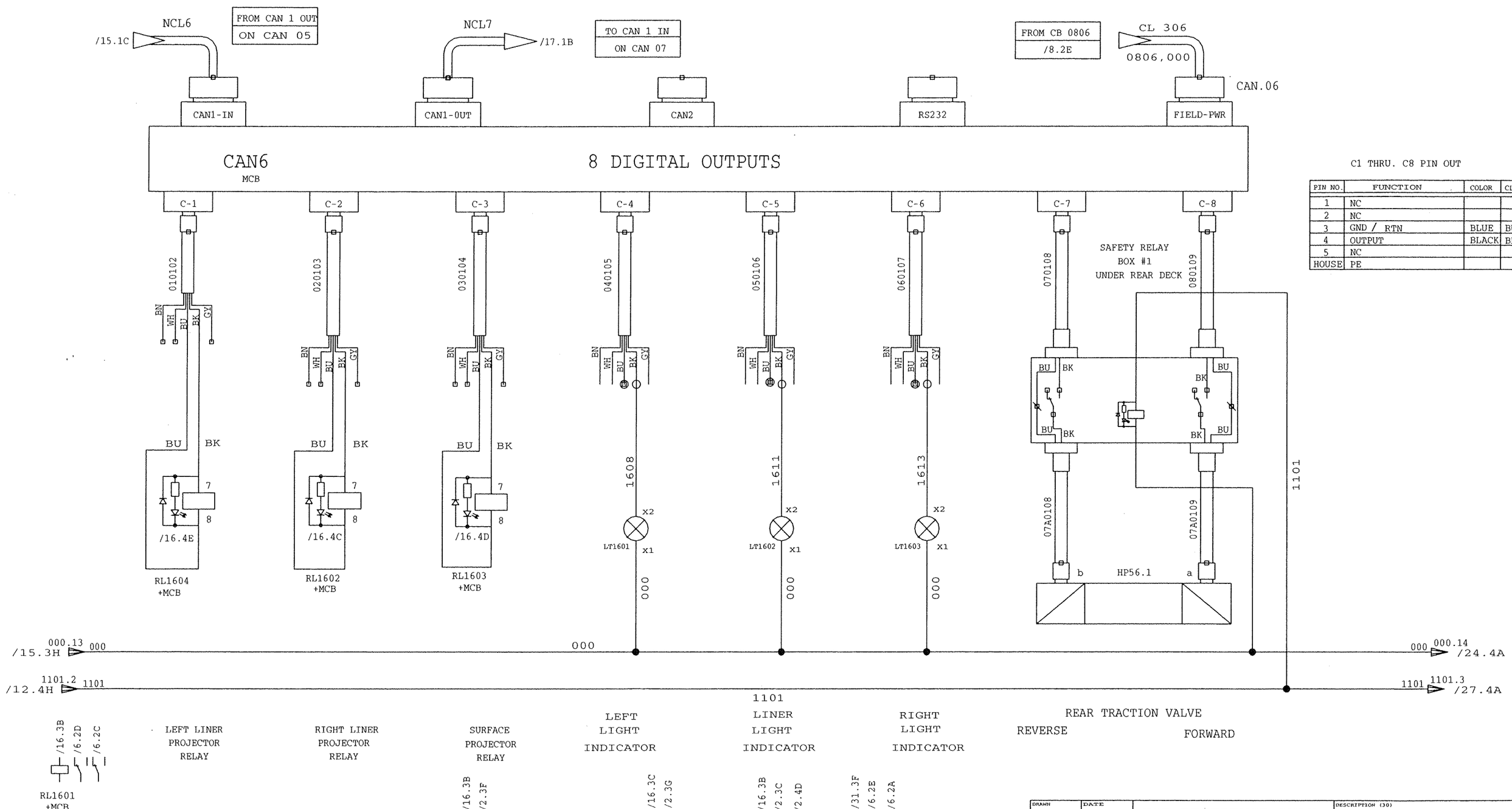

C1 THRU. C8 PIN OUT

PIN NO.	FUNCTION	COLOR	CLR
1	NC		
2	NC		
3	GND / RTN	BLUE	BU
4	OUTPUT	BLACK	BK
5	NC		
HOUSE	PE		

NO	ER	DESCRIPTION	ZONE	DR	CK	APP	MF
1		NEW RELEASE		W.G.			

REVISIONS

THIS DOCUMENT CONTAINS PROPRIETARY INFORMATION AND SUCH INFORMATION MAY NOT BE DISCLOSED TO OTHERS FOR ANY PURPOSE OR USED FOR MANUFACTURING PURPOSES WITHOUT THE WRITTEN PERMISSION OF HARSCO TRACK TECHNOLOGIES

NO	ER	DESCRIPTION	ZONE	DR	CK	APP	MF

LOC
ASS
SHEET 16 OUT OF 30

DRAWN W. GRIER	DATE 7-7-07	FOR REFERENCE ONLY
CHECKED	DATE	
APP-ENG J.R.	DATE 7-7-07	
APP-MFG	DATE	

HTT Harsco Track Technologies
a harsco company
2401 Edmund Road-Box 20
Cayce-West Columbia,
South Carolina 29171-0020
(803) 822-9160

DESCRIPTION (30)
ELECT SCHEMATIC

MACHINE TYPE
MK VI , ON TRAC

ENG.DWG.NO.
4013198

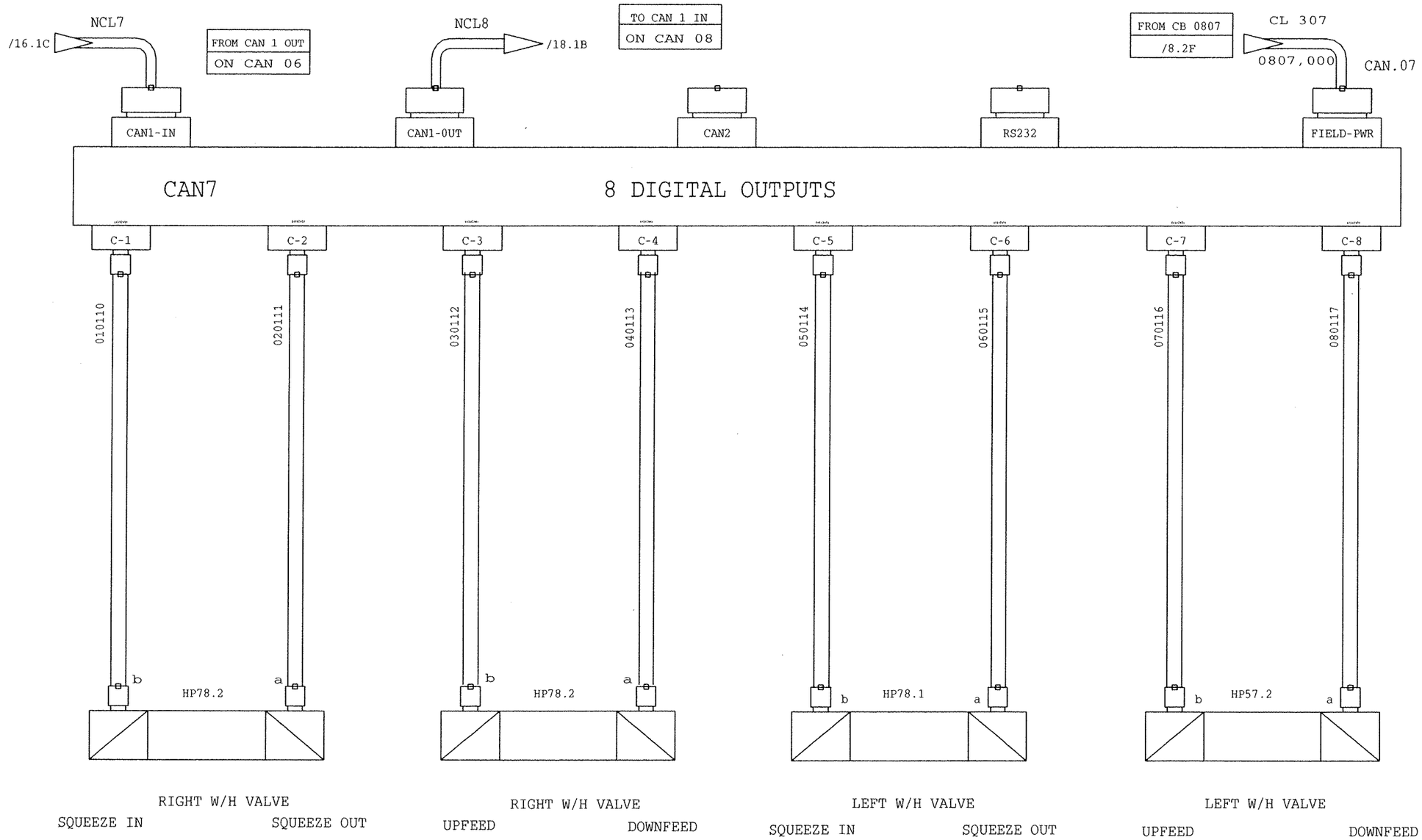

C1 THRU. C8 PIN OUT

PIN NO.	FUNCTION	COLOR	CLR
1	NC		
2	NC		
3	GND / RTN	BLUE	BU
4	OUTPUT	BLACK	BK
5	NC		
HOUSE	PE		

NO	ER	DESCRIPTION	ZONE	DR	CK	APP	MF
1		NEW RELEASE		W.G.			

REVISIONS

THIS DOCUMENT CONTAINS PROPRIETARY INFORMATION AND SUCH INFORMATION MAY NOT BE DISCLOSED TO OTHERS FOR ANY PURPOSE OR USED FOR MANUFACTURING PURPOSES WITHOUT THE WRITTEN PERMISSION OF HARSCO TRACK TECHNOLOGIES

NO	ER	DESCRIPTION	ZONE	DR	CK	APP	MF

LOC
ASS
SHEET 17 OUT OF 30

DRAWN W. GRIER	DATE 7-7-07	FOR REFERENCE ONLY
CHECKED	DATE	
APP-ENG J.R.	DATE 7-7-07	
APP-MFG	DATE	

HTT Harsco Track Technologies
a harsco company
2401 Edmund Road-Box 20
Cayce-West Columbia,
South Carolina 29171-0020
(803) 822-9160

DESCRIPTION (30)
ELECT SCHEMATIC

MACHINE TYPE
MK VI , ON TRACK

ENG.DWG.NO.
4013198

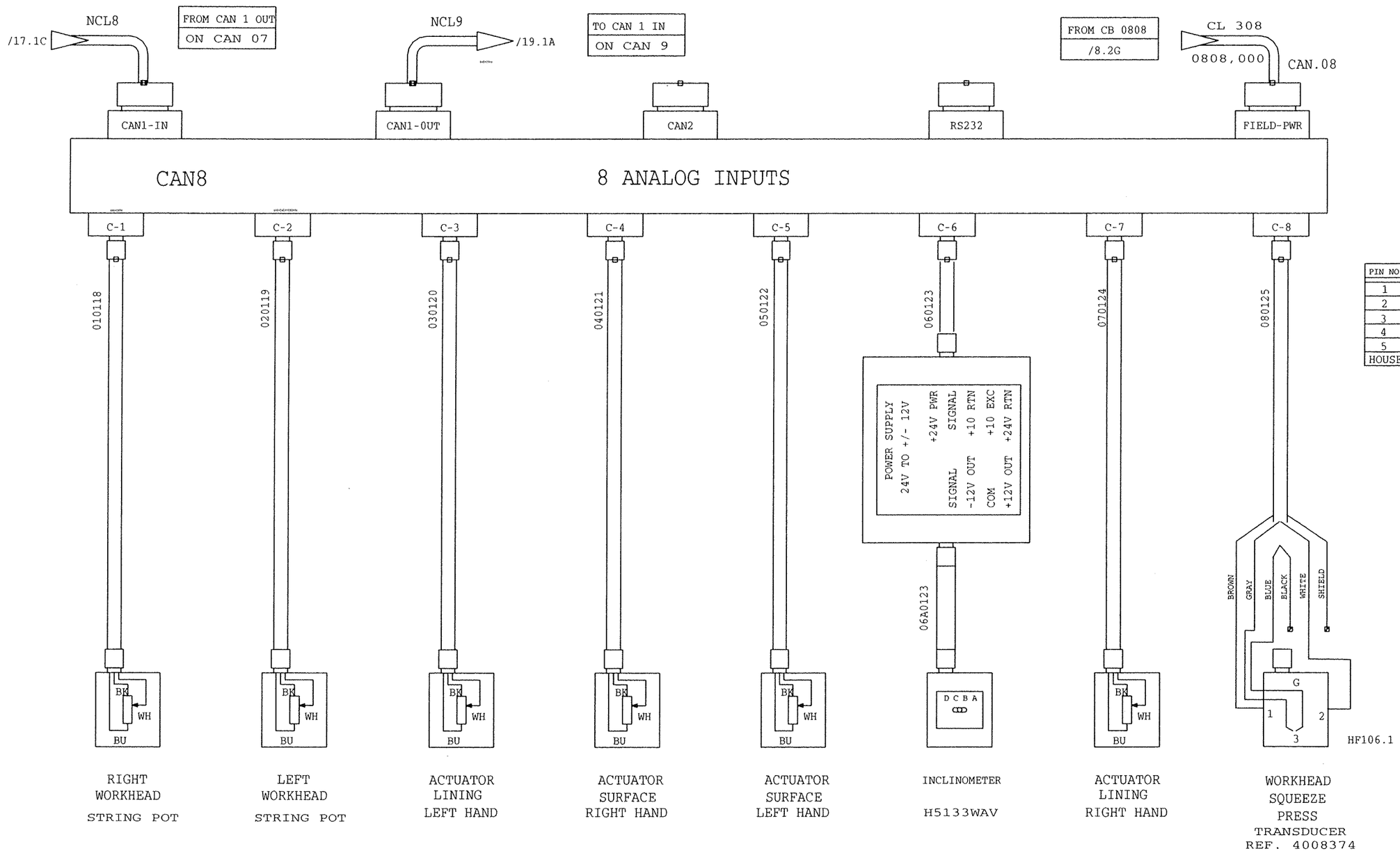

C1 THRU. C8 PIN OUT

PIN NO.	FUNCTION	COLOR	CLR
1	+ 24 VDC EXC.	BROWN	BN
2	SIGNAL	WHITE	WH
3	+ 10 RTN	BLUE	BU
4	+ 10 VDC EXC	BLACK	BK
5	RTN FOR + 24 VDC	GRAY	GY
HOUSE	PE		

NO	ER	DESCRIPTION	ZONE	DR	CK	APP	MF
1		NEW RELEASE		W.G.			

REVISIONS

THIS DOCUMENT CONTAINS PROPRIETARY INFORMATION AND SUCH INFORMATION MAY NOT BE DISCLOSED TO OTHERS FOR ANY PURPOSE OR USED FOR MANUFACTURING PURPOSES WITHOUT THE WRITTEN PERMISSION OF HARSCO TRACK TECHNOLOGIES

NO	ER	DESCRIPTION	ZONE	DR	CK	APP	MF

LOC
ASS
SHEET 18 OUT OF 30

DRAWN W. GRIER	DATE 7-7-07	FOR REFERENCE ONLY
CHECKED	DATE	
APP-ENG J.R.	DATE 7-7-07	
APP-MFG	DATE	

HTT Harsco Track Technologies
a harsco company
2401 Edmund Road-Box 20
Cayce-West Columbia, South Carolina 29171-0020
(803) 822-9160

DESCRIPTION (30)
ELECT SCHEMATIC

MACHINE TYPE
MK VI , ON TRACK

ENG.DWG.NO.
4013198

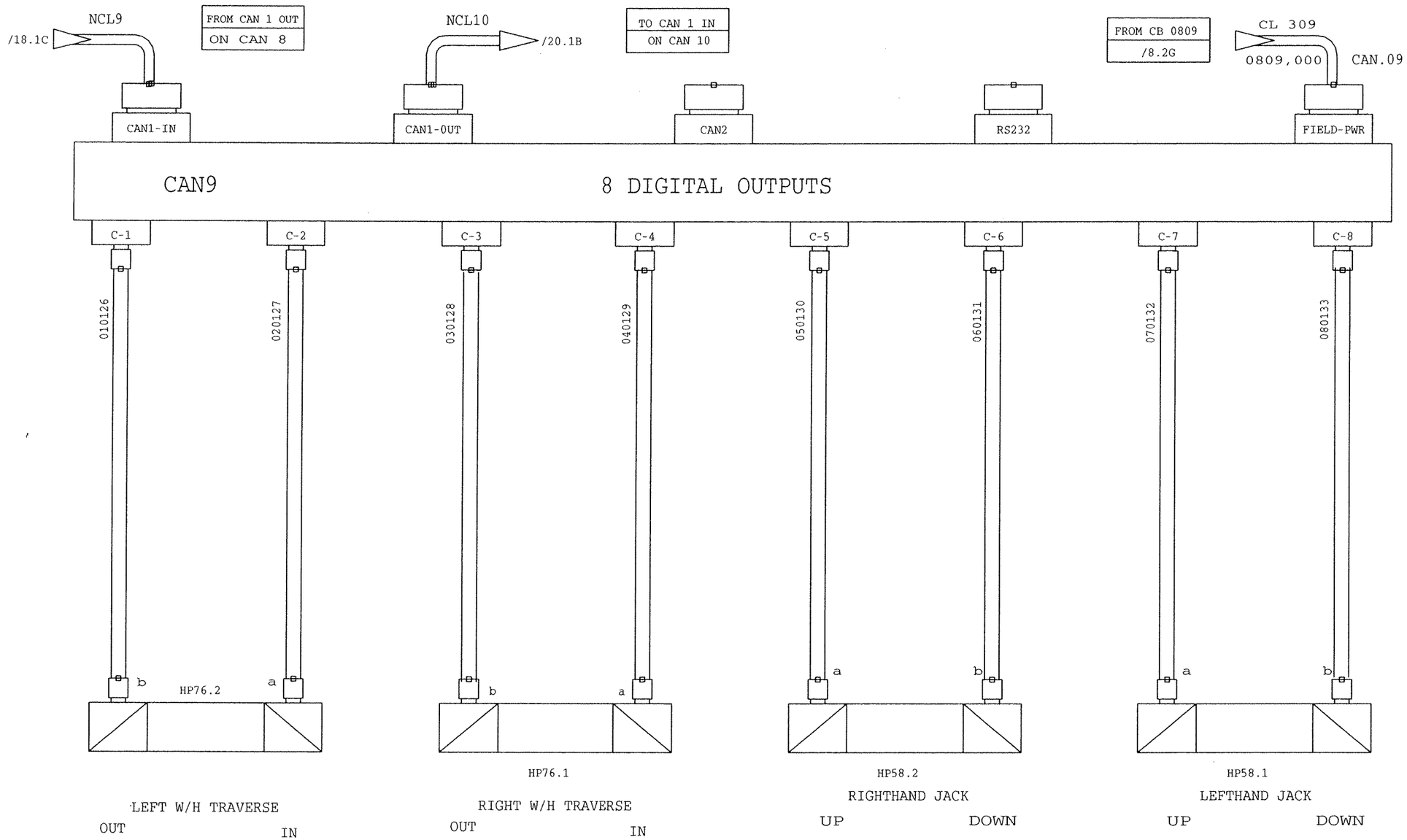

C1 THRU. C8 PIN OUT

PIN NO.	FUNCTION	COLOR	CLR
1	NC		
2	NC		
3	GND / RTN	BLUE	BU
4	OUTPUT	BLACK	BK
5	NC		
HOUSE	PE		

NO	ER	DESCRIPTION	ZONE	DR	CK	APP	MF
1		NEW RELEASE		W.G.			

REVISIONS

THIS DOCUMENT CONTAINS PROPRIETARY INFORMATION AND SUCH INFORMATION MAY NOT BE DISCLOSED TO OTHERS FOR ANY PURPOSE OR USED FOR MANUFACTURING PURPOSES WITHOUT THE WRITTEN PERMISSION OF HARSCO TRACK TECHNOLOGIES

NO	ER	DESCRIPTION	ZONE	DR	CK	APP	MF

LOC
ASS
SHEET 19 OUT OF 30

DRAWN W. GRIER	DATE 7-7-07	FOR REFERENCE ONLY	DESCRIPTION (30) ELECT SCHEMATIC
CHECKED	DATE		MACHINE TYPE MK VI, ON TRACK
APP-ENG J.R.	DATE 7-7-07	HTT Harsco Track Technologies a harsco company — 2401 Edmund Road-Box 20, Cayce-West Columbia, South Carolina 29171-0020, (803) 822-9160	ENG.DWG.NO. 4013198
APP-MFG	DATE		

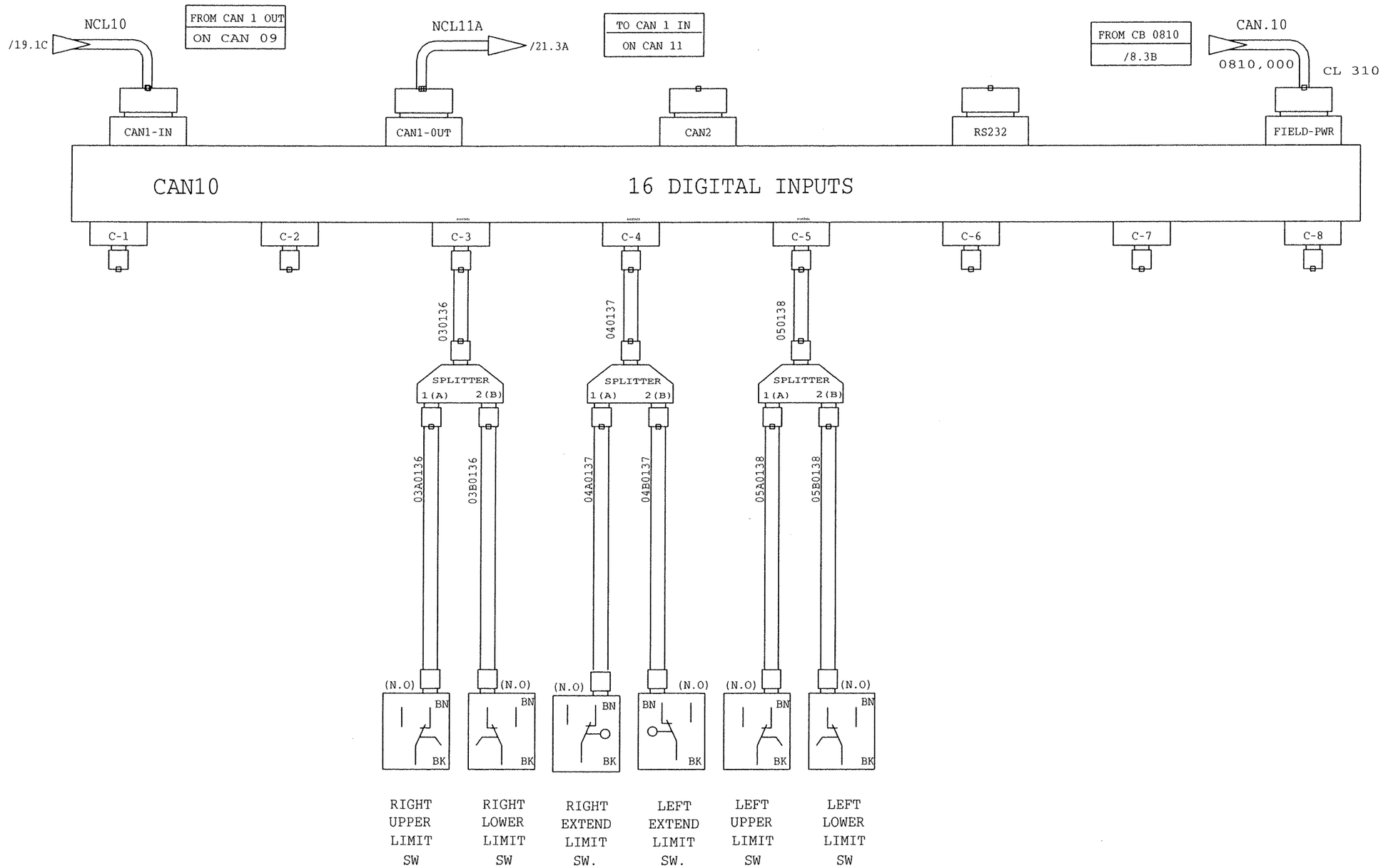

C1 THRU. C8 PIN OUT

PIN NO.	FUNCTION	COLOR	CLR
1	LOAD VOLTAGE SUPPLY	BROWN	BN
2	INPUT SIGNAL B	WHITE	WH
3	GND	BLUE	BU
4	INPUT SIGNAL A	BLACK	BK
5	NC		
HOUSE	PE		

NO	ER	DESCRIPTION	ZONE	DR	CK	APP	MF
1		NEW RELEASE		W.G.			

REVISIONS

THIS DOCUMENT CONTAINS PROPRIETARY INFORMATION AND SUCH INFORMATION MAY NOT BE DISCLOSED TO OTHERS FOR ANY PURPOSE OR USED FOR MANUFACTURING PURPOSES WITHOUT THE WRITTEN PERMISSION OF HARSCO TRACK TECHNOLOGIES

NO	ER	DESCRIPTION	ZONE	DR	CK	APP	MF

LOC
ASS
SHEET 20 OUT OF 30

DRAWN W. GRIER	DATE 7-7-07	FOR REFERENCE ONLY
CHECKED	DATE	
APP-ENG J.R.	DATE 7-7-07	
APP-MFG	DATE	

HTT Harsco Track Technologies
a harsco company
2401 Edmund Road-Box 20
Cayce-West Columbia,
South Carolina 29171-0020
(803) 822-9160

DESCRIPTION (30)
ELECT SCHEMATIC

MACHINE TYPE
MK VI , ON TRACK

ENG.DWG.NO.
4013198

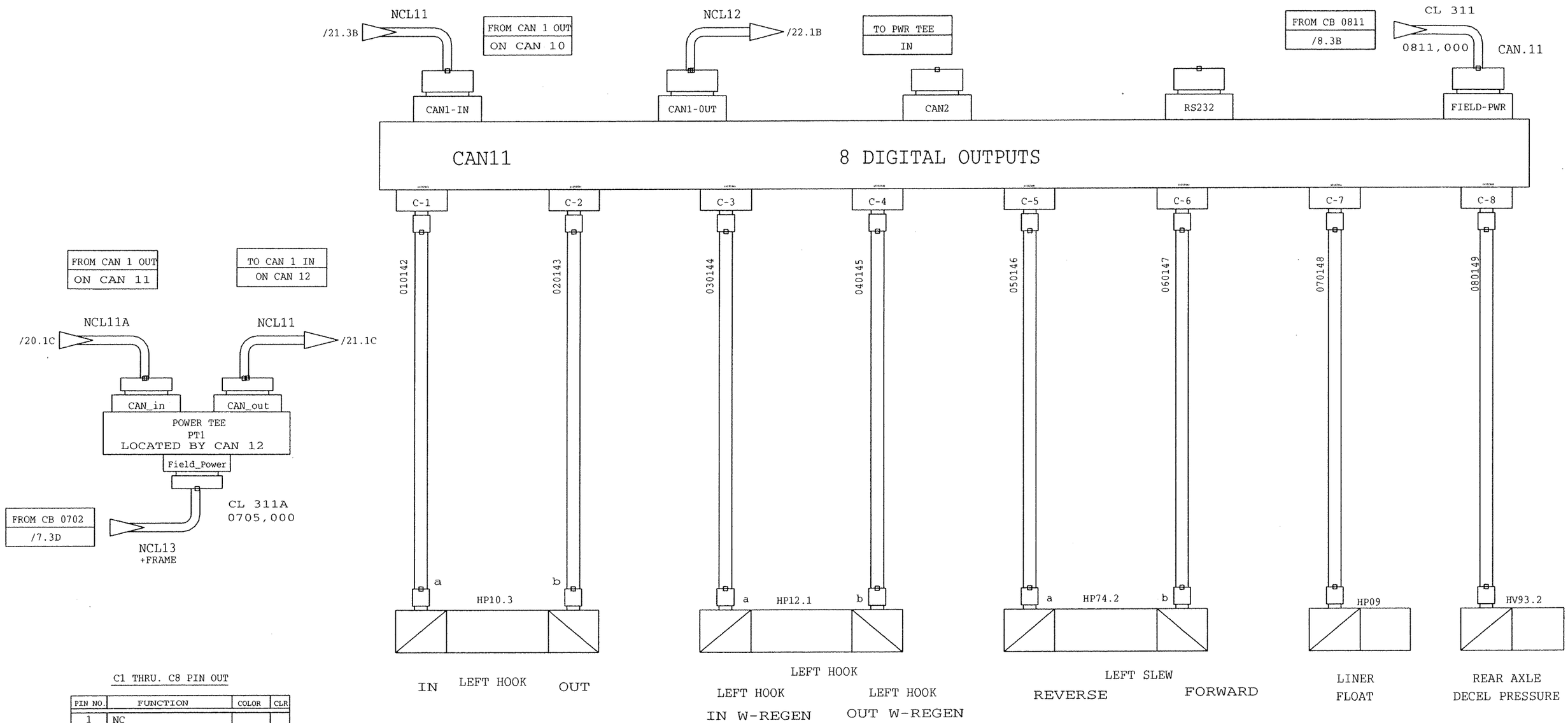

C1 THRU. C8 PIN OUT

PIN NO.	FUNCTION	COLOR	CLR
1	NC		
2	NC		
3	GND / RTN	BLUE	BU
4	OUTPUT	BLACK	BK
5	NC		
HOUSE	PE		

NO	ER	DESCRIPTION	ZONE	DR	CK	APP	MF
1		NEW RELEASE		W.G.			

REVISIONS

THIS DOCUMENT CONTAINS PROPRIETARY INFORMATION AND SUCH INFORMATION MAY NOT BE DISCLOSED TO OTHERS FOR ANY PURPOSE OR USED FOR MANUFACTURING PURPOSES WITHOUT THE WRITTEN PERMISSION OF HARSCO TRACK TECHNOLOGIES

NO	ER	DESCRIPTION	ZONE	DR	CK	APP	MF

LOC
ASS
SHEET 21 OUT OF 30

DRAWN W. GRIER	DATE 7-7-07	FOR REFERENCE ONLY
CHECKED	DATE	
APP-ENG J.R.	DATE 7-7-07	
APP-MFG	DATE	

HTT Harsco Track Technologies
a harsco company
2401 Edmund Road-Box 20
Cayce-West Columbia,
South Carolina 29171-0020
(803) R22-9160

DESCRIPTION (30)
ELECT SCHEMATIC

MACHINE TYPE
MK VI , ON TRAC

ENG.DWG.NO.
4013198

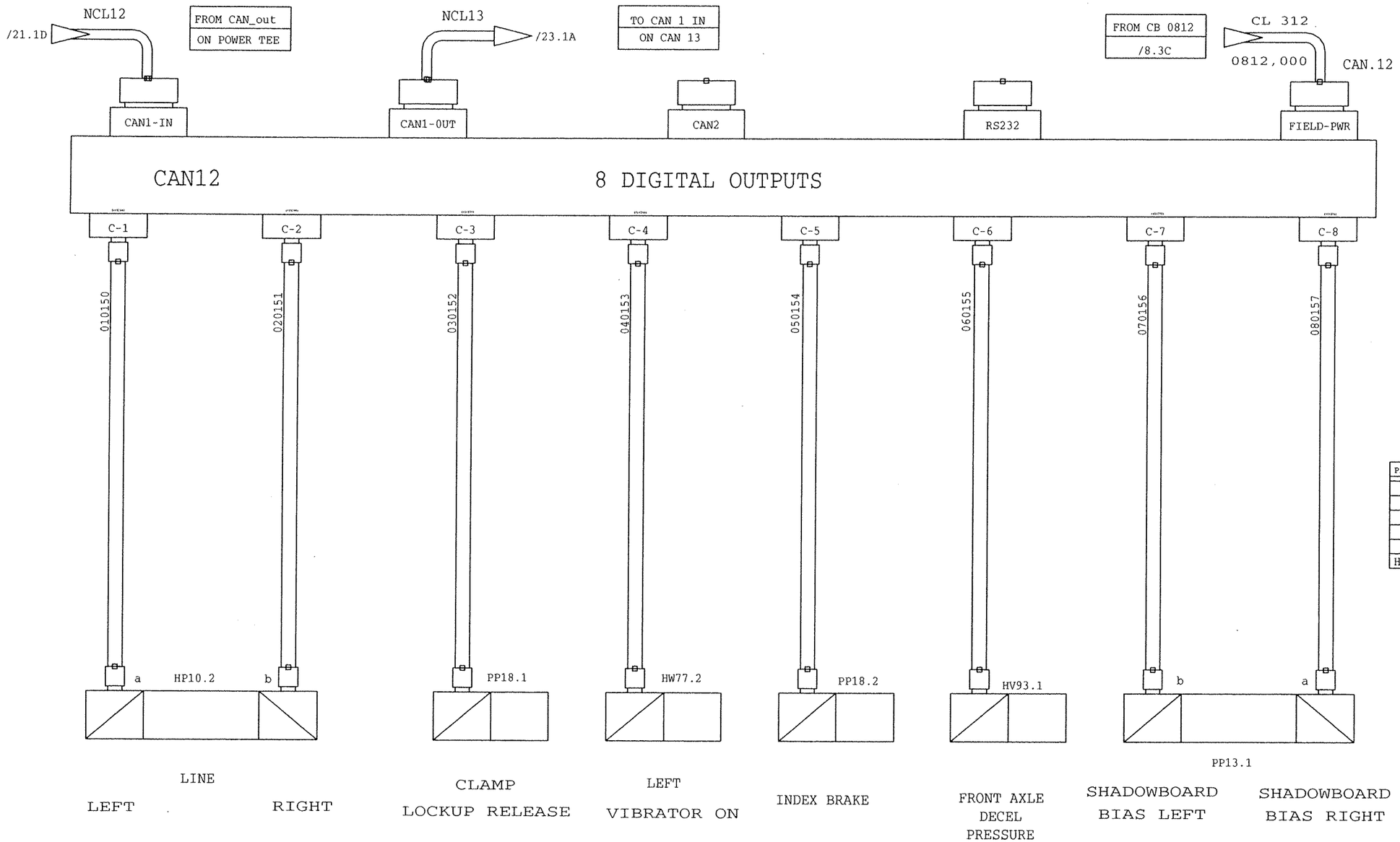

C1 THRU. C8 PIN OUT

PIN NO.	FUNCTION	COLOR*	CLR
1	NC		
2	NC		
3	GND / RTN	BLUE	BU
4	OUTPUT	BLACK	BK
5	NC		
HOUSE	PE		

NO	ER	DESCRIPTION	ZONE	DR	CK	APP	MF
1		NEW RELEASE		W.G.			

REVISIONS

THIS DOCUMENT CONTAINS PROPRIETARY INFORMATION AND SUCH INFORMATION MAY NOT BE DISCLOSED TO OTHERS FOR ANY PURPOSE OR USED FOR MANUFACTURING PURPOSES WITHOUT THE WRITTEN PERMISSION OF HARSCO TRACK TECHNOLOGIES

NO	ER	DESCRIPTION	ZONE	DR	CK	APP	MF

LOC
ASS
SHEET 22 OUT OF 30

DRAWN W. GRIER	DATE 7-7-07	FOR REFERENCE ONLY
CHECKED	DATE	
APP-ENG J.R.	DATE 7-7-07	
APP-MFG	DATE	

HTT Harsco Track Technologies
a harsco company
2401 Edmund Road-Box 20
Cayce-West Columbia,
South Carolina 29171-0020
(803) 822-9160

DESCRIPTION (30)
ELECT SCHEMATIC

MACHINE TYPE
MK VI , ON TRACK

ENG.DWG.NO.
4013198

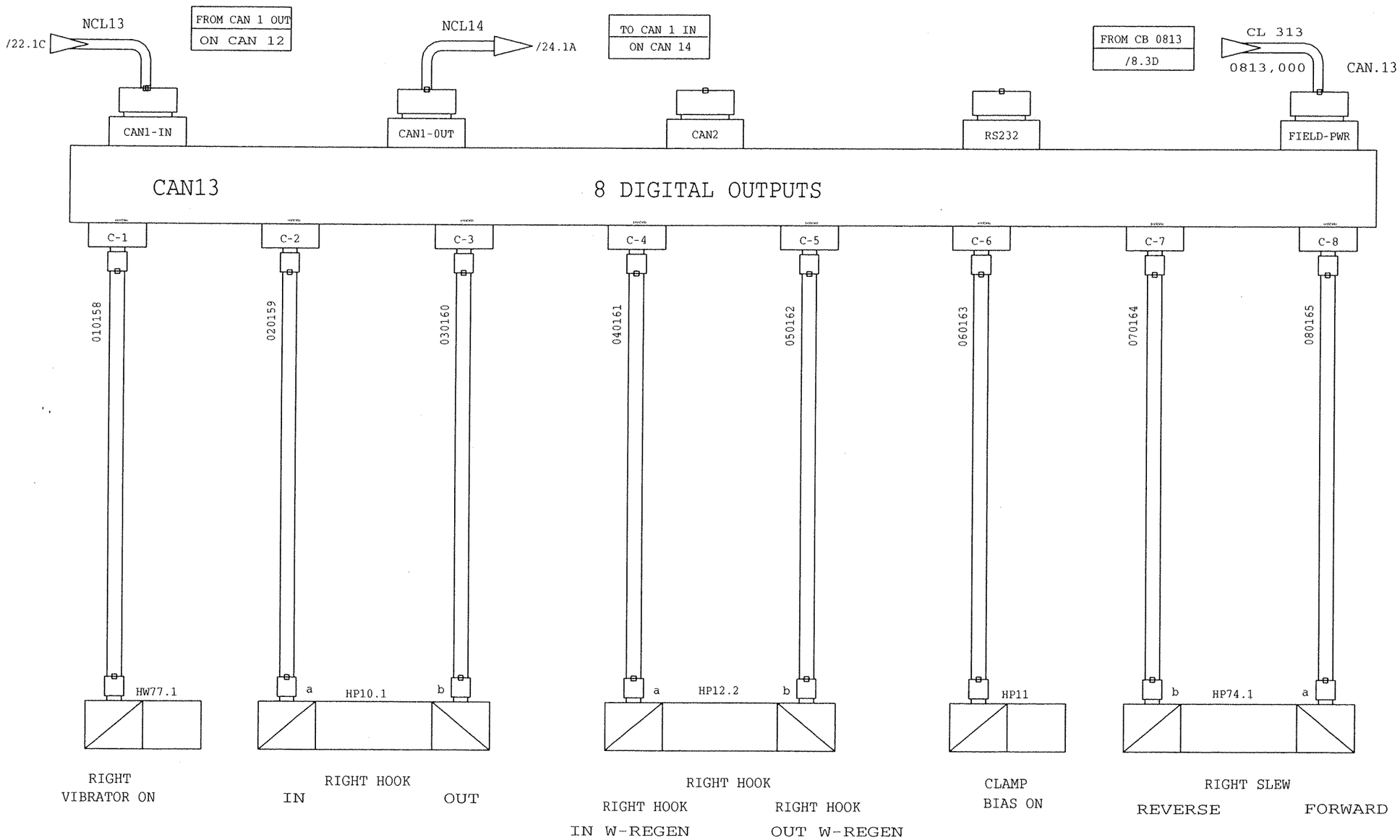

C1 THRU. C8 PIN OUT

PIN NO.	FUNCTION	COLOR	CLR
1	NC		
2	NC		
3	GND / RTN	BLUE	BU
4	OUTPUT	BLACK	BK
5	NC		
HOUSE	PE		

NO	ER	DESCRIPTION	ZONE	DR	CK	APP	MF
1		NEW RELEASE		W.G.			

REVISIONS

THIS DOCUMENT CONTAINS PROPRIETARY INFORMATION AND SUCH INFORMATION MAY NOT BE DISCLOSED TO OTHERS FOR ANY PURPOSE OR USED FOR MANUFACTURING PURPOSES WITHOUT THE WRITTEN PERMISSION OF HARSCO TRACK TECHNOLOGIES

NO	ER	DESCRIPTION	ZONE	DR	CK	APP	MF

LOC
ASS
SHEET 23 OUT OF 30

DRAWN W. GRIER	DATE 7-7-07
CHECKED	DATE
APP-ENG J.R.	DATE 7-7-07
APP-MFG	DATE

FOR REFERENCE ONLY

HTT Harsco Track Technologies
a harsco company
2401 Edmund Road-Box 20
Cayce-West Columbia,
South Carolina 29171-0020
(803) 822-9160

DESCRIPTION (30)
ELECT SCHEMATIC

MACHINE TYPE
MK VI , ON TRACK

ENG.DWG.NO.
4013198

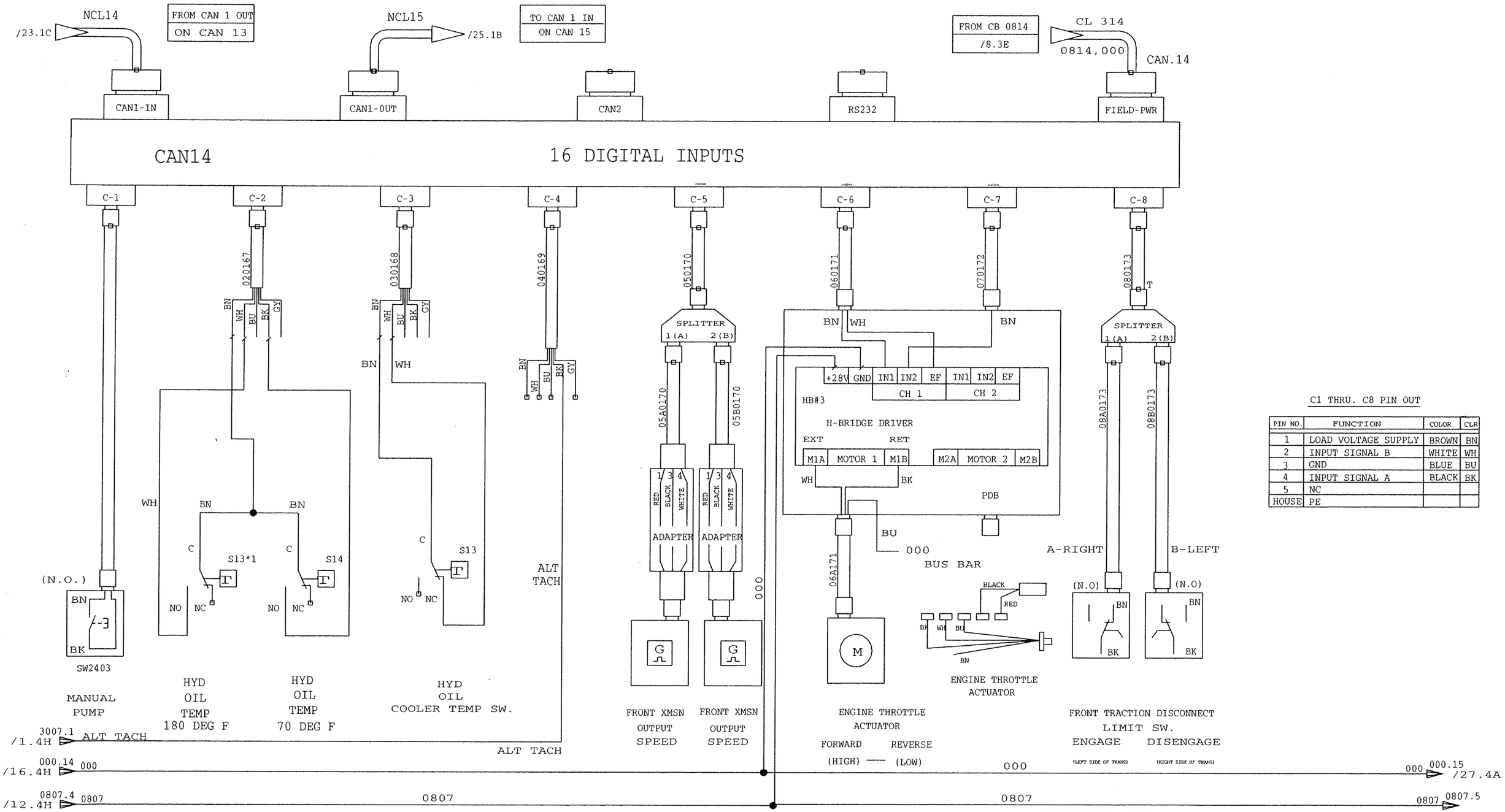

C1 THRU. C8 PIN OUT

PIN NO.	FUNCTION	COLOR	CLR
1	LOAD VOLTAGE SUPPLY	BROWN	BN
2	INPUT SIGNAL B	WHITE	WH
3	GND	BLUE	BU
4	INPUT SIGNAL A	BLACK	BK
5	NC		
HOUSE	PE		

NO	ER	DESCRIPTION	ZONE	DR	CK	APP	MF
1		NEW RELEASE		W.G.			

REVISIONS

THIS DOCUMENT CONTAINS PROPRIETARY INFORMATION AND SUCH INFORMATION MAY NOT BE DISCLOSED TO OTHERS FOR ANY PURPOSE OR USED FOR MANUFACTURING PURPOSES WITHOUT THE WRITTEN PERMISSION OF HARSCO TRACK TECHNOLOGIES

NO	ER	DESCRIPTION	ZONE	DR	CK	APP	MF

LOC
ASS
SHEET 24 OUT OF 30

DRAWN W. GRIER DATE 7-7-07
CHECKED DATE
APP-ENG J.R. DATE 7-7-07
APP-MFG DATE

FOR REFERENCE ONLY

Harsco Track Technologies
a harsco company
2401 Edmund Road-Box 20
Cayce-West Columbia, South Carolina 29171-0020
(803) 822-9160

DESCRIPTION (30)
ELECT SCHEMATIC

MACHINE TYPE
MK VI , ON TRACK

ENG.DWG.NO.
4013198

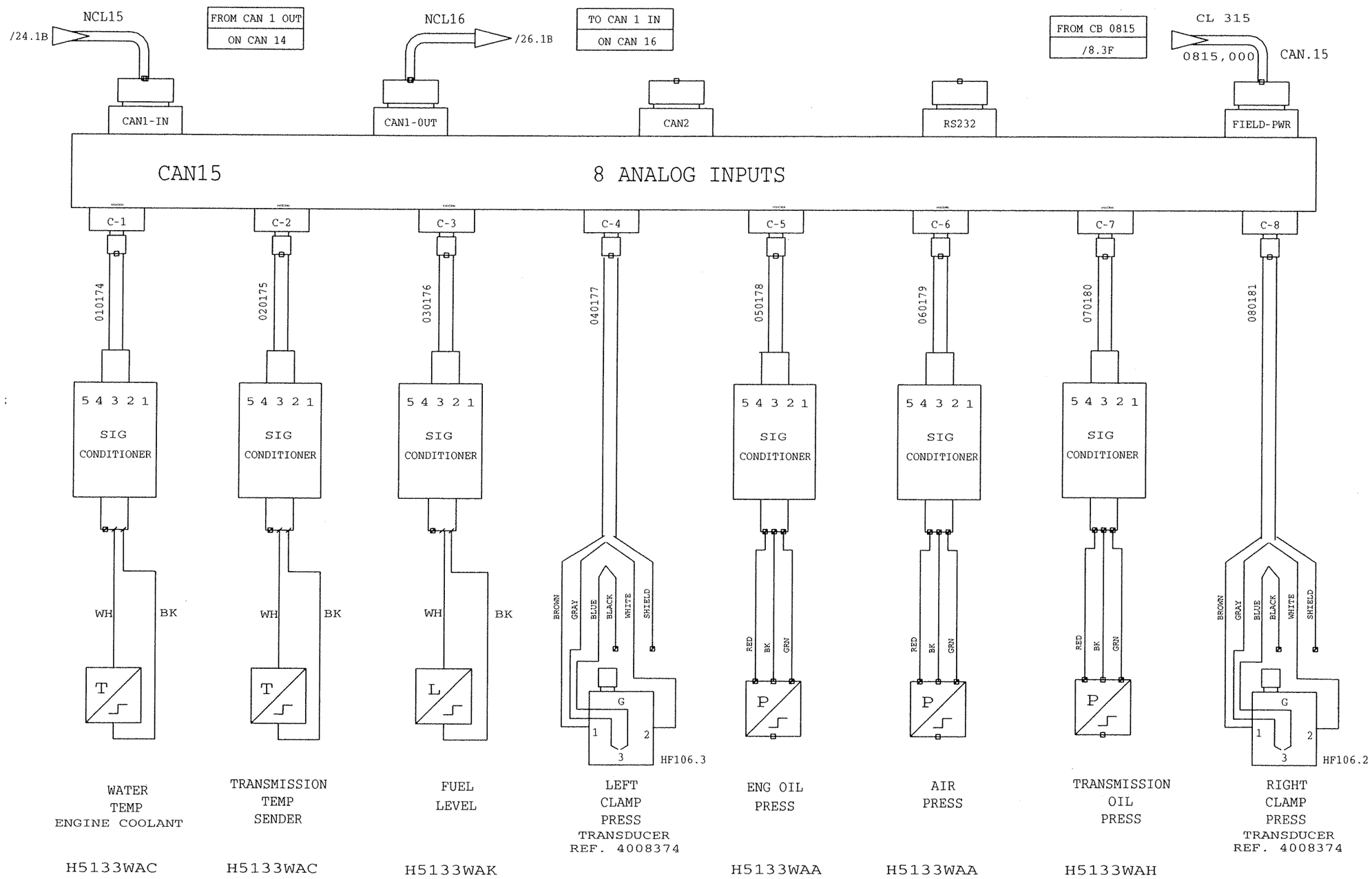

C1 THRU. C8 PIN OUT

PIN NO.	FUNCTION	COLOR	CLR
1	+ 24 VDC EXC.	BROWN	BN
2	SIGNAL	WHITE	WH
3	+ 10 RTN	BLUE	BU
4	+ 10 VDC EXC	BLACK	BK
5	RTN FOR + 24 VDC	GRAY	GY
HOUSE	PE		

NO	ER	DESCRIPTION	ZONE	DR	CK	APP	MF
1		NEW RELEASE		W.G.			

REVISIONS

THIS DOCUMENT CONTAINS PROPRIETARY INFORMATION AND SUCH INFORMATION MAY NOT BE DISCLOSED TO OTHERS FOR ANY PURPOSE OR USED FOR MANUFACTURING PURPOSES WITHOUT THE WRITTEN PERMISSION OF HARSCO TRACK TECHNOLOGIES

NO	ER	DESCRIPTION	ZONE	DR	CK	APP	MF

LOC
ASS
SHEET 25 OUT OF 30

DRAWN W. GRIER	DATE 7-7-07	FOR REFERENCE ONLY	DESCRIPTION (30) ELECT SCHEMATIC
CHECKED	DATE		MACHINE TYPE MK VI , ON TRAC
APP-ENG J.R.	DATE 7-7-07		
APP-MFG	DATE		ENG.DWG.NO. 4013198

HTT Harsco Track Technologies
a harsco company
2401 Edmund Road-Box 20
Cayce-West Columbia,
South Carolina 29171-0020
(803) 822-9160

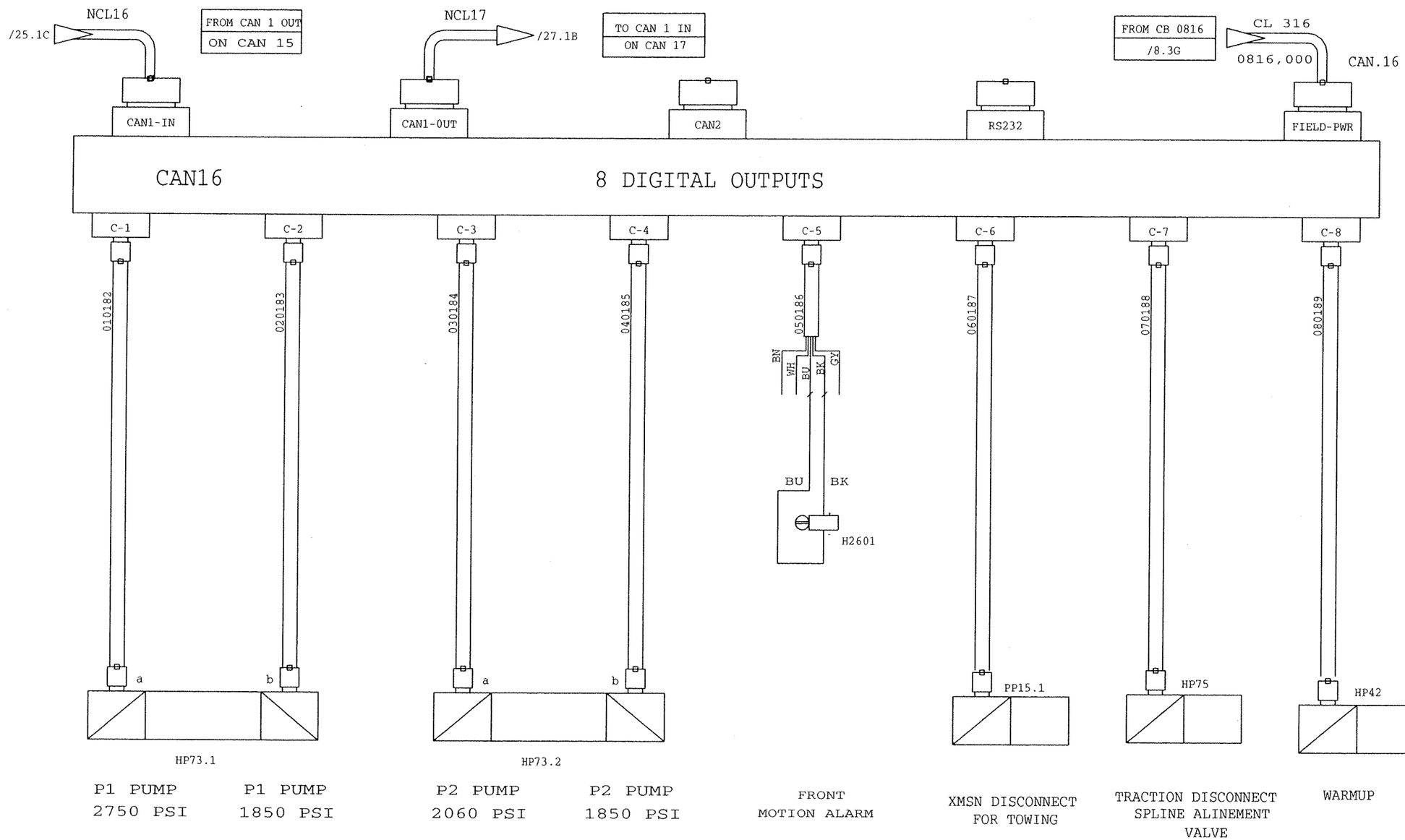

C1 THRU. C8 PIN OUT

PIN NO.	FUNCTION	COLOR	CLR
1	NC		
2	NC		
3	GND / RTN	BLUE	BU
4	OUTPUT	BLACK	BK
5	NC		
HOUSE	PE		

NO	ER	DESCRIPTION	ZONE	DR	CK	APP	MF
1		NEW RELEASE		W.G.			

REVISIONS

THIS DOCUMENT CONTAINS PROPRIETARY INFORMATION AND SUCH INFORMATION MAY NOT BE DISCLOSED TO OTHERS FOR ANY PURPOSE OR USED FOR MANUFACTURING PURPOSES WITHOUT THE WRITTEN PERMISSION OF HARSCO TRACK TECHNOLOGIES

NO	ER	DESCRIPTION	ZONE	DR	CK	APP	MF

LOC
ASS
SHEET 26 OUT OF 30

DRAWN W. GRIER	DATE 7-7-07	FOR REFERENCE ONLY	DESCRIPTION (30) ELECT SCHEMATIC
CHECKED	DATE		MACHINE TYPE MK VI , ON TRACK
APP-ENG J.R.	DATE 7-7-07		ENG.DWG.NO. 4013198
APP-MFG	DATE		

HTT Harsco Track Technologies
a harsco company
2401 Edmund Road-Box 20
Cayce-West Columbia,
South Carolina 29171-0020
(803) 822-9160

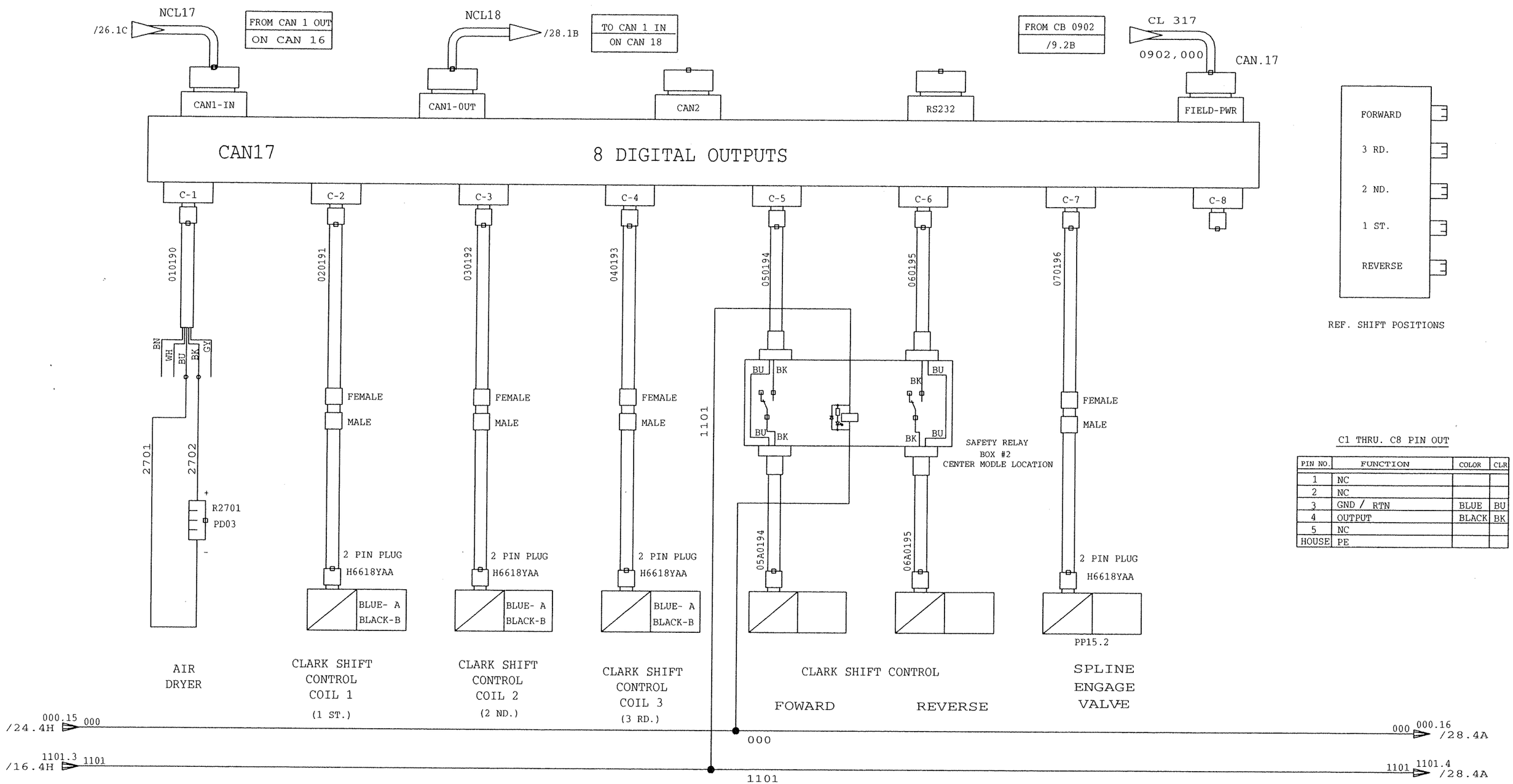

C1 THRU. C8 PIN OUT

PIN NO.	FUNCTION	COLOR	CLR
1	NC		
2	NC		
3	GND / RTN	BLUE	BU
4	OUTPUT	BLACK	BK
5	NC		
HOUSE	PE		

NO	ER	DESCRIPTION	ZONE	DR	CK	APP	MF
1		NEW RELEASE	W.G.				

REVISIONS

THIS DOCUMENT CONTAINS PROPRIETARY INFORMATION AND SUCH INFORMATION MAY NOT BE DISCLOSED TO OTHERS FOR ANY PURPOSE OR USED FOR MANUFACTURING PURPOSES WITHOUT THE WRITTEN PERMISSION OF HARSCO TRACK TECHNOLOGIES

NO	ER	DESCRIPTION	ZONE	DR	CK	APP	MF

LOC
ASS
SHEET 27 OUT OF 30

DRAWN W. GRIER	DATE 7-7-07
CHECKED	DATE
APP-ENG J.R.	DATE 7-7-07
APP-MFG	DATE

FOR REFERENCE ONLY

HTT Harsco Track Technologies
a harsco company
2401 Edmund Road-Box 20
Cayce-West Columbia,
South Carolina 29171-0020
(803) 822-9160

DESCRIPTION (30)
ELECT SCHEMATIC

MACHINE TYPE
MK VI , ON TRACK

ENG.DWG.NO.
4013198

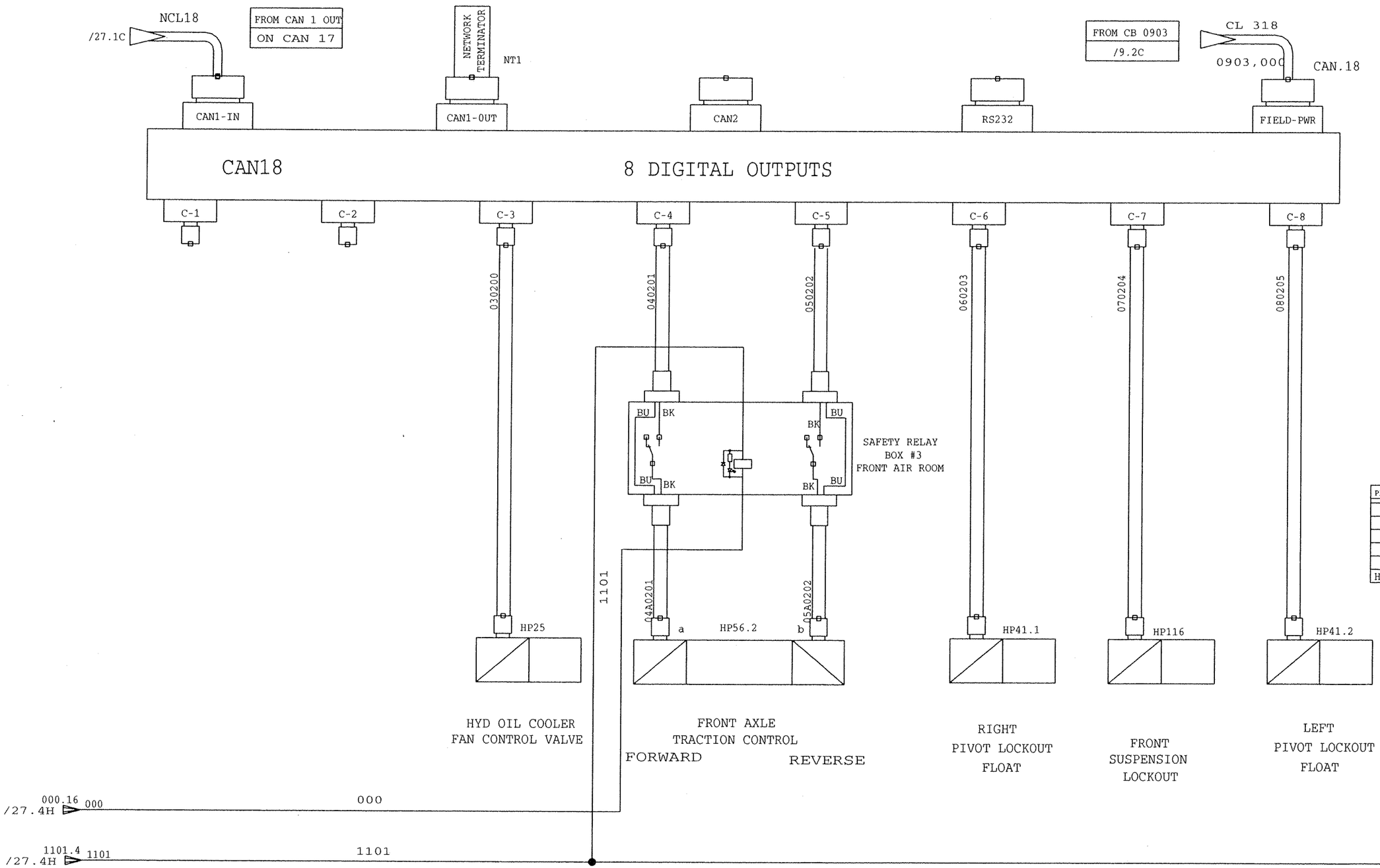

C1 THRU. C8 PIN OUT

PIN NO.	FUNCTION	COLOR	CLR
1	NC		
2	NC		
3	GND / RTN	BLUE	BU
4	OUTPUT	BLACK	BK
5	NC		
HOUSE	PE		

NO	ER	DESCRIPTION	ZONE	DR	CK	APP	MF
1		NEW RELEASE		W.G			

REVISIONS

THIS DOCUMENT CONTAINS PROPRIETARY INFORMATION AND SUCH INFORMATION MAY NOT BE DISCLOSED TO OTHERS FOR ANY PURPOSE OR USED FOR MANUFACTURING PURPOSES WITHOUT THE WRITTEN PERMISSION OF HARSCO TRACK TECHNOLOGIES

NO	ER	DESCRIPTION	ZONE	DR	CK	APP	MF

LOC
ASS
SHEET 28 OUT OF 30

DRAWN W. GRIER	DATE 7-7-07	FOR REFERENCE ONLY
CHECKED	DATE	
APP-ENG J.R.	DATE 7-7-07	
APP-MFG	DATE	

HTT Harsco Track Technologies
a harsco company
2401 Edmund Road-Box 20
Cayce-West Columbia,
South Carolina 29171-0020
(803) 822-9160

DESCRIPTION (30)
ELECT SCHEMATIC

MACHINE TYPE
MK VI, ON TRACK

ENG.DWG.NO.
4013198

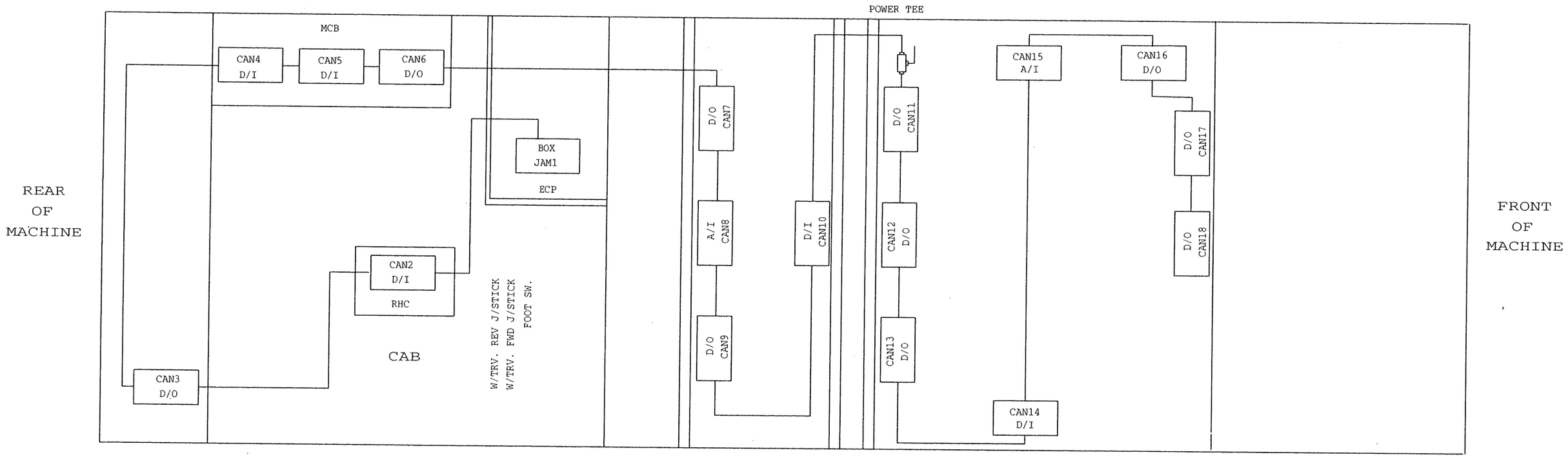

JUPITER MODULE AND NETWORK CABLE LAYOUT

NO	ER	DESCRIPTION	ZONE	DR	CK	APP	MF
1		NEW RELEASE		W.G.			

REVISIONS

THIS DOCUMENT CONTAINS PROPRIETARY INFORMATION AND SUCH INFORMATION MAY NOT BE DISCLOSED TO OTHERS FOR ANY PURPOSE OR USED FOR MANUFACTURING PURPOSES WITHOUT THE WRITTEN PERMISSION OF HARSCO TRACK TECHNOLOGIES

NO	ER	DESCRIPTION	ZONE	DR	CK	APP	MF

LOC
ASS
SHEET 29 OUT OF 30

DRAWN W. GRIER	DATE 7-7-07	FOR REFERENCE ONLY
CHECKED	DATE	
APP-ENG J.R.	DATE 7-7-07	
APP-MFG	DATE	

HTT Harsco Track Technologies
a harsco company
2401 Edmund Road-Box 20
Cayce-West Columbia,
South Carolina 29171-0020
(803) 822-9160

DESCRIPTION (30)
ELECT SCHEMATIC

MACHINE TYPE
MK VI , ON TRACK

ENG.DWG.NO.
4013198

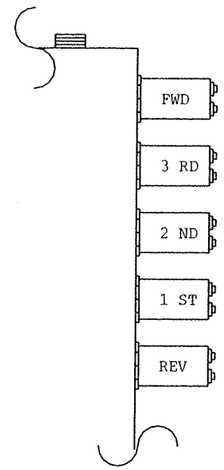

COIL POSITIONS

COILS

GEAR ENGAGED	1	2	3
1 ST.	*	*	*
2 ND.	—	*	*
3 RD.	—	—	*
4 TH.	—	—	—

COIL SELECTION CHART

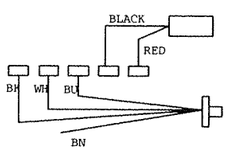

ENGINE THROTTLE ACTUATOR

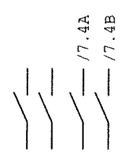

SW1
+RHC

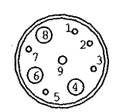

CAN 1 IN

1	CAN HIGH
2	CN GND
3	CAN LOW
4	+24 IN
5	NC
6	R - C SHIELDING
7	NC
8	GND 24V IN
9	CHAIN IN
HOUSING	PE

CAN IN CONNNECTOR CONINVERS M23 TYP RC MALE

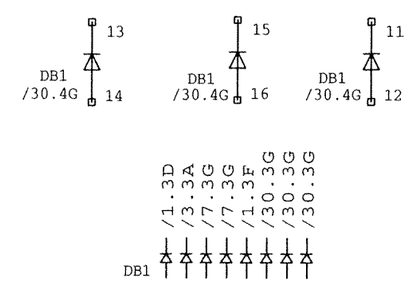

NO	ER	DESCRIPTION	ZONE	DR	CK	APP	MF
1	100850	NEW RELEASE		W.G.			

REVISIONS

THIS DOCUMENT CONTAINS PROPRIETARY INFORMATION AND SUCH INFORMATION MAY NOT BE DISCLOSED TO OTHERS FOR ANY PURPOSE OR USED FOR MANUFACTURING PURPOSES WITHOUT THE WRITTEN PERMISSION OF HARSCO TRACK TECHNOLOGIES

NO	ER	DESCRIPTION	ZONE	DR	CK	APP	MF

LOC
ASS
SHEET 30 OUT OF 30

DRAWN W. GRIER	DATE 7-7-07	FOR REFERENCE ONLY
CHECKED	DATE	
APP-ENG J.R.	DATE 7-7-07	
APP-MFG	DATE	

HTT Harsco Track Technologies
a harsco company
2401 Edmund Road-Box 20
Cayce-West Columbia,
South Carolina 29171-0020
(803) 822-9160

DESCRIPTION (30)
ELECT SCHEMATIC

MACHINE TYPE
MK VI, ON TRACK

ENG.DWG.NO.
H4765Y02

ENG.DWG.NO.
D1139WAC

REVISIONS							
NO	ER	DESCRIPTION	ZONE	DR	CK	APP	MF
1		NEW RELEASE		TAF	HW	AML	

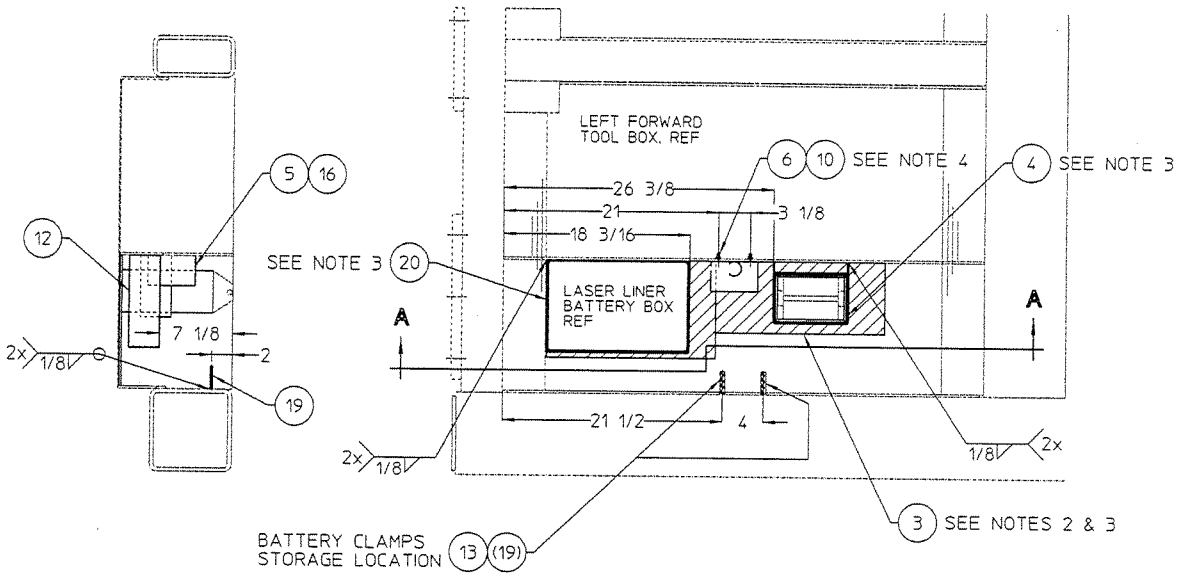

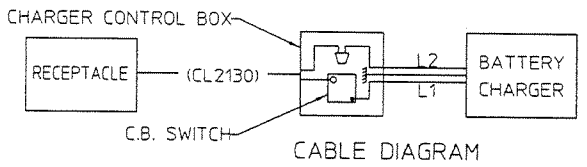

CABLE DIAGRAM

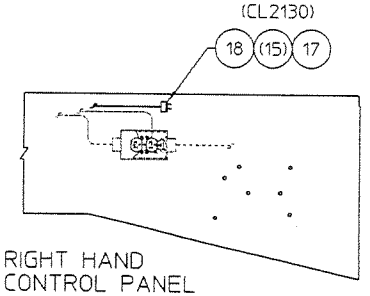

RIGHT HAND CONTROL PANEL

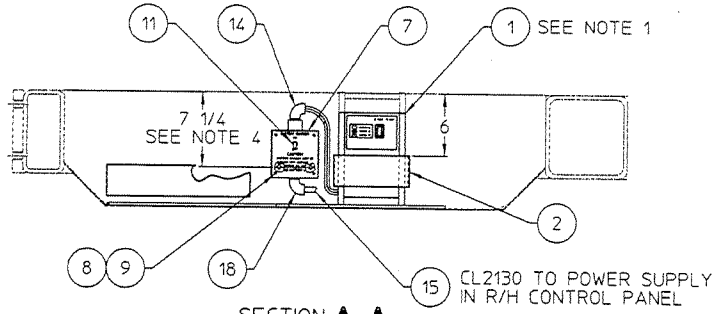

SECTION **A–A**

NOTES:

1- CUT OFF EXISTING CHARGER WIRE PLUG. REMOVE HANDLE FLUSH WITH TOP OF CHARGER.

2- CUT PAD TO APPROXIMATE SIZE SHOWN.

3- USE ADHESIVE TO SECURE IN PLACE.

4- DRILL 2 Ø9/32 HOLES FOR BOLT CLEARANCE.

SEE SEPARTE PARTS LIST

SCALE: 6

FIG NO.	ITEM NO.	PART NUMBER	DESCRIPTION AND MATERIAL SIZE (REF.ONLY)	QTY

IMPLIED TOLERANCES
ALL DIMENSIONS ARE IN INCHES-TOLERANCE UNLESS OTHERWISE SPECIFIED

NOMINAL SIZE RANGE OVER	TO	PLUS OR MINUS FRACTION	2 PLACE DECIMAL	3 PLACE DECIMAL	NOMINAL SIZE RANGE OVER	TO	PLUS OR MINUS FRACTION	2 PLACE DECIMAL	3 PLACE DECIMAL
-	1	1/64	.01	.003	6	24	3/64	.03	.006
1	6	1/32	.02	.005	24	-	1/16	.05	.010

ANGULAR DIMENSIONS PLUS OR MINUS 1 DEGREE

ALL MACHINED SURFACES TO HAVE A SURFACE FINISH OF 125 MICROINCHES UNLESS OTHERWISE SPECIFIED

WELDING SPECIFICATION

UNLESS OTHERWISE SPECIFIED ALL WELDS SHOULD ADHERE TO FAIRMONT TAMPER WELDING SPECIFICATION NO. 101

WEIGHT LBS.

3rd ANGLE PROJECTION

DO NOT SCALE

SHEET 1 CONT. – OF –

DESCRIPTION Q'ty: LASER BATTERY CHARGER

DRAWN TAF	DATE 18 MAR 99	MACHINE TYPE MARK VI
CHECKED HW	DATE 26 MAR 99	
APPROVED AML	DATE 25 MAR 99	
APP-MFG	DATE	
LAST EDT. 11707 3	CHECKED DWG DATE 29-Mar-99	ENGINEERING D1139WAC

Fairmont Tamper
2401 Edmund Road-Box 20
Cayce-West Columbia,
South Carolina 29171-0020
(803) 822-1960

THIS DOCUMENT CONTAINS PROPRIETARY INFORMATION AND SUCH INFORMATION MAY NOT BE DISCLOSED TO OTHERS FOR ANY PURPOSE OR USED FOR MANUFACTURING PURPOSES WITHOUT THE WRITTEN PERMISSION OF FAIRMONT TAMPER.

PARTS LIST

ITEM NO	PART NUMBER	DESCRIPTION	QUANTITY
1	A8341Y01	BATTERY CHARGER	1
2	D1100YAB	CHARGER BKT WLDT	1
3	D8007Y01	ISOLATION MAT	1
4	D1119Y01	SAFETY PAD	1
5	A8385Y01	SWITCH BOX	1
6	A0036005	1/4-20 X 1 HHCS	2
7	A8343Y01	NAMEPLATE	1
8	A0050039	8-32 X 1/2 PL RD HD MS	4
9	A0061005	8 PLATED LOCK WASHER	4
10	L40237	1/4-20 ESNA NUT	2
11	0-3105013-0-06	CIRCUIT BREAKER	1
12	D1129X02	BATTERY BKT	1
13	L423094	HOSE, VACUUM / 250 PSI	.4
14	L424087	1/2 IN 90° STRAIN RELIEF	1
15	L411081	CABLE 10/3 TYPE SO (FT)	50
16	L40835	MARR CONNECTOR	1
17	0-3231005-0-10	CABLE PLUG	1
18	L421303	3/4 IN 90° STRAIN RELIEF	2
19	A0220T41	RD BAR Ø 1/4 x 2 1/4	2
20	D8006Y01	BUMPER PAD	1

ASSEMBLY IDENTIFIER

MK VI W/O COUPLER

ASSEMBLY DESCRIPTION

ER
DR
CK
APP
MF

REVISIONS

NO	ER	DESCRIPTION	DR	CK	APP	MF
1		NEW RELEASE	TAF	HW	AML	

DWG NO D1139WAC

SHEET 1

CONT ON –

DESCRIPTION (24) LASER BATTERY CHARGER

DRAWN TAF DATE 18 MAR 99

CHECKED HW DATE 26 OCT 98

APP AML DATE 23 OCT 98

APP DATE

SHEET 1 CONT ON – LAST ECR 11707 CHECKED hwi DATE 29-Mar-99 DWG NO D1139WAC

Fairmont Tamper™
2401 Edmund Road-Box 20
Cayce-West Columbia,
South Carolina 29171-0020
(803) 822-9160

Rear Cab and Components

Item Number	Document Number	Title	Quantity
1	0-3643005-0-01.	SHOCK MOUNT	6
2	TY780009-052	WASHER, .81 I.D. X 3.5 O.D.	6
3	L40931	LOCKNUT, 3/4-10, HEAVY THIN	6
4	A0036230	3/4-10 X 6 HHCS GR. 5	6

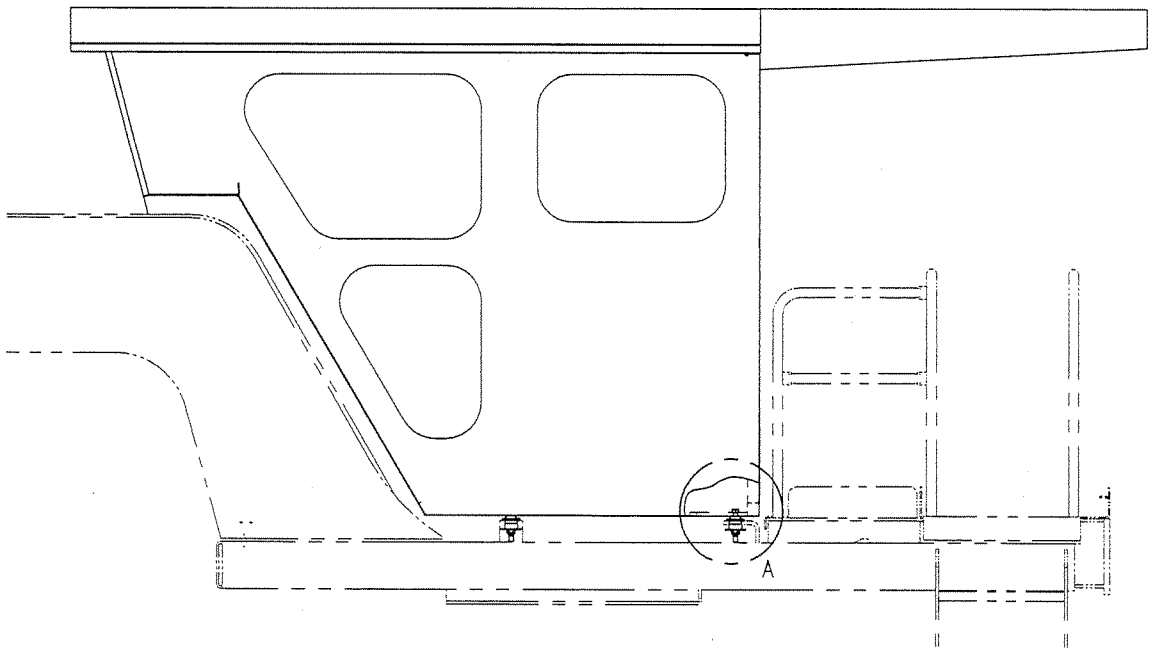

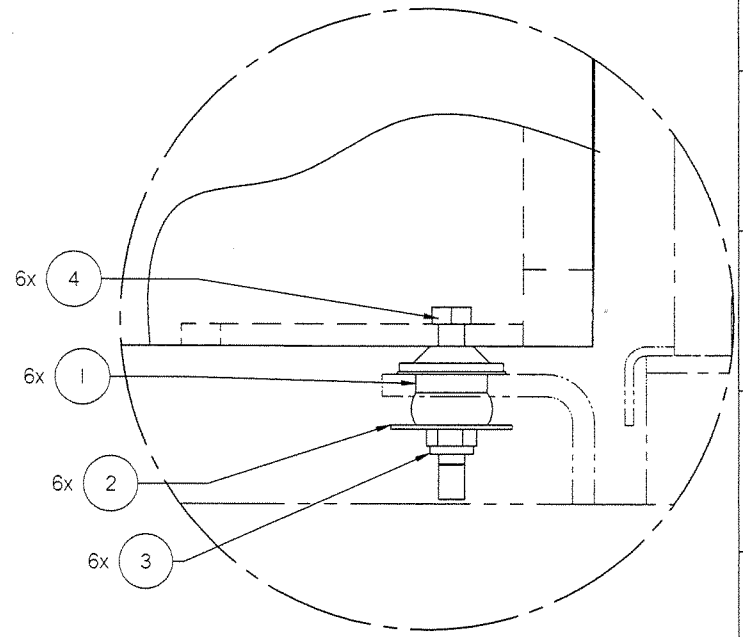

DETAIL A

CONFIDENTIAL
© COPYRIGHT 2001 HARSCO TRACK TECHNOLOGIES. THIS DRAWING OR DOCUMENT IS THE PROPERTY OF HARSCO TRACK TECHNOLOGIES AND EMBODIES CONFIDENTIAL INFORMATION, TRADE SECRET INFORMATION, AND/OR KNOWHOW THAT IS THE PROPERTY OF HARSCO TRACK TECHNOLOGIES. BY ACCEPTING THIS DRAWING OR DOCUMENT, THE RECIPIENT AGREES (1) NOT TO PROVIDE, OR OTHERWISE MAKE AVAILABLE, THE DRAWING OR DOCUMENT, OR ANY INFORMATION OR KNOWHOW EMBODIED THEREIN, TO ANY THIRD PARTY AND (2) NOT TO REPRODUCE OR USE THE DRAWING OR DOCUMENT TO MANUFACTURE ANY APPARATUS OR DEVICE, WITHOUT THE PRIOR WRITTEN AUTHORIZATION OF HARSCO TRACK TECHNOLOGIES.

SOLID EDGE DRAWING

INCLUSIVE DIMENSIONS
ALL DIMENSIONS ARE IN INCHES - TOLERANCE UNLESS OTHERWISE SPECIFIED

CHANGE	R/L	REVISION	DATE
13116.25	A	RELEASE	8-17-05

Description: REAR CAB INSTALLATION

Drawing Number: IRAQ MK VI

Model: 4009525.asm

Drawn: Teagans 8-17-05

Scale: 1:4

Approved: AML

Checked: AML

Part Number: 4009525 D 1 of 1

HTT
Harsco Track Technologies
Harsco
Columbia, SC

Plotted by hwiggins on 5/16/2007 4009525.dft

It No	Part Number	Description	Qty
1	4013683	CAB WELDMENT	1
2	0-3502007-0-12	WINDSHIELD WIPER MOTOR	1
3	0-3502050-0-02	WINDSHIELD WIPER ARM	1
4	0-3502003-0-05	WIPER BLADE, 20 INCH	1
5	0-3502050-0-12	PANTOGRAPH ADAPTER KIT	1
6	A0050083	1/4 -20 X 2 RD HD MACH SCREW	2
7	H5890Y01	ACCESS COVER PLATE	2
8	A0061004	#6 LOCKWASHER	14
9	A0050025	6-32 X 1/2 PL RD HEAD MACH SCREW	14
10	0-2301261-0-01	DOME LIGHT, 24VDC	2
11	G3464Y01	WIPER MOTOR SPACER	2
12	G3464Y02	WIPER MOTOR SPACER	1
13	L40387	LOCKNUT, 3/8-16, HEAVY	16
14	A0061008	1/4 MEDIUM LOCK WASHER	13
15	A0036003	1/4-20 X 3/4 HHCS	27
16	0-3044006-0-03	TRIM-SEAL	29
17	B4618Y01	CAB LOCK	1
18	L425565	HANDLE	1
19	A0071111	10-32 X 1/2 PL OHMS	2
20	A0061006	WASHER, #10, LOCK WASHER	30
21	A0050068	10-32 X 1/2 PL RHMS	6
22	Z7803097	AIR HORN	1
23	A0036005	1/4-20 X 1" HHCS	7
24	L40237	LOCKNUT, 1/4-20, HEAVY	19
25	0-3018011-0-01	PADDLE HANDLE LOCK	1
26	0-1405820-0-01	TRIM MOLDING (FT)	3
27	H1958X03	MCB DOOR	1
28	H6240X01	MCB DOOR KEEPER	1
29	B5532Y08	#10-24 X 1/2 SCREW W/ CAPTIVE WASHER	3
30	L41127	ESNA NUT 10-24 USE F018029K	3
31	H6320Y01	NON LOCKING LATCH LEVER	2
32	L425984	ELECTRIC FAN, 24 VDC	3
33	A0050056	10-24 X 3/4 PL RD HD MS	12
34	A0055039	10-24 PLATED HEX NUT	12
35	Z763595-001	GROMMET	3
36	A0061016	5/8 MED LOK WSHR	6
37	4005777	CAB PADDING & FLOOR MAT	1
38	4008027	WIPER MOTOR COVER	1
39*	A0036068	3/8-16 X 2" HHCS GR5	9
40	L41582	5/16-18 HEX LOCK NUT	4
41	A0036034	5/16-18 x 1" HHCS GR5	4
43	L41157	LOCKNUT, 1/4-20, LIGHT	6
44	H3671WAA	A/C	1
46	L424107	3/4 IN ST STRAIN RELIEF	1
47	D2290Y01	CABLE BOOT	1
48	D2291Y01	BOOT RING	1
49	A0050054	10-24 X 1/2 PL RD HD MS	8
50	A0036177	5/8-11 X 1 3/4 HHCS	6
51	0-3502007-0-33	WINDSHIELD WIPER MOTOR	1
52	0-3502050-0-01	WINDSHIELD WIPER ARM	1
53	0-3502003-0-08	WINDSHIELD WIPER BLADE	1
54	A0050078	1/4-20 X 3/4 RD HD MS	1
55*	A0055009	1/4-20 HEX NUT	1
56	H3064X01	BLOWER MTG BRKT	1
75	4009667	SEAT ASSEMBLY	1

It No	Part Number	Description	Qty
76	C6584WAB	PRINTER STAND W/COVER	1
77	C6491Y01	PRINTER	1
78	A0059001	1/4 FLAT WASHER	10
81*	B1623Y01	1/4 CORG CONDUIT	40
82*	B1623Y02	CORRUGATED CONDUIT	40
83*	L422568	CABLE 16/24 TYPE SOO	25
84*	A1230Y28	STRAIN RELIEF	1
85	L40817	1/2 IN ST STRAIN RELIEF	2
86*	A9297Y03	16 GA WIRE	185
87	A8962Y01	HOSE INSULATION	4
88	0-3231005-0-10	CABLE PLUG	1
89	L422002	CABLE 14/3 SO CABLE	4
90	4013210	MCB ASSEMBLY	1
91	4013211	ECP ASSEMBLY	1
92	0-3011001-0-82	LOCKNUT, 10-32	8
93	0-3101019-0-33	LED, 6 CHIP, 24V, YEL	1
94	0-3101019-0-36	LED, 6 CHIP, 24V, RED	2
95	0-3132002-0-05	RESISTOR, 120 OHM	1
96	0-3236009-0-01	RECEPTACLE, DUPLEX	1
97	254289-1	KEYBOARD	1
98	4005774	MONITOR CLAMP	1
99	4006078	PANEL, INDICATOR	1
100	4011036	KEYBOARD STAND	1
103	A0037008	1/4-20 X 1/2" HHCS	2
104	A0050070	10-32 X 3/4 PL RD HD MS	4
107*	A1103Y01	CABLE STAINLESS STEEL	3
108	A1563Y05	#10-32 THREADED INSERT	6
109	A1563Y07	1/4 THREADED INSERT	2
110	A1787Y24	DC TO AC CONVERTER	1
111*	A4577T02	SWAGE SLEEVE	4
112	A9264Y06	WASHER, ANTI-ROTATION	3
113	A9264Y08	LENS, RED	2
114	A9264Y09	LENS, AMBER	1
115	A9264Y17	SERIES #51 SW, MOM, RECT	3
116	B0970Y01	FOUR PLACE TERMINAL	42
117*	B0970Y02	END PLATE	1
118	B0970Y05	END CLAMP	2
119	B0970Y07	MARKING STRIP	42
120	B0970Y58	TERMINAL BLOCK #UDK 4-TG	1
121	B0970Y59	COMPONENT PLUG #ST-BE	1
122	B0970Y60	END COVER #D-UDK REGL	1
123	B0971T03	DIN RAIL, 13.78 LG	1
124	B0971T29	5.00 DIN RAIL	1
125	B1507Y03	CONVERTOR, 24V-12V	1
126	B5532Y05	10-32 X 5/8 BLK W/WASH	12
127	B9688Y10	MONITOR DESK MOUNT	1
128	B9688Y12	MONITOR, FLAT NONTOUCH	1
129	B9689Y11	PRINTER CABLE	1
130	B9689Y42	VIDEO EXTEND CABLE (3 FT)	1
131	C6654Y03	RECEPTACLE PLATE	1
132	D2044Y03	CLOSE CIRCUT TV SYSTEM	1
133	G6468Y01	T HANDLE LATCH	1
134	H3572X01	MONITOR SHROUD	1
135	H5991Y03	JAM BOX	1
136	H6032XAE	CABLE P42 TO JAM BOX	1

It No	Part Number	Description	Qty
137	H6430XAA	P42 PCB ASSY	1
139	L411086	#16 AWG	60
141	L422086	DRAWER HANDLE	1
142	Z690720	FITTING BOX	1
143	A2197Y05	LAMP ASSY	2
144	A2197Y09	MARINE SPOT LIGHT ASSY	2

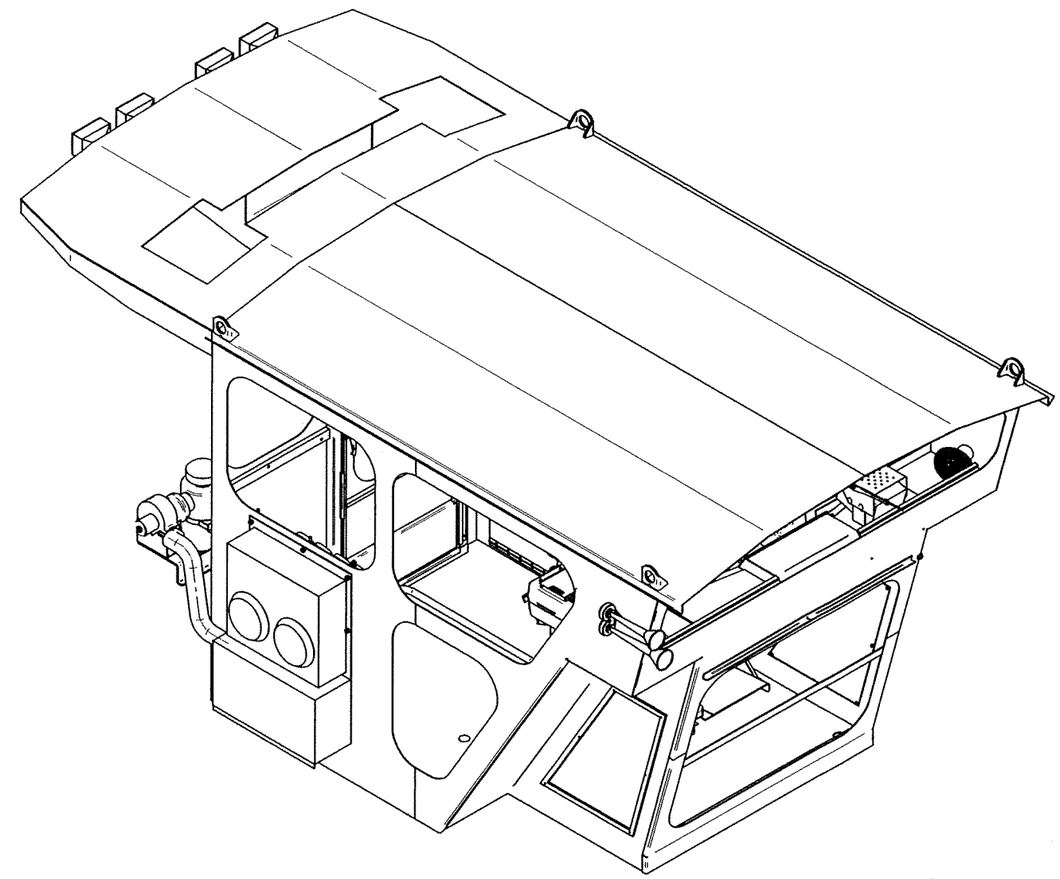

SOLID EDGE DRAWING

CONFIDENTIAL
© COPYRIGHT 2001 HARSCO TRACK TECHNOLOGIES. THIS DRAWING OR DOCUMENT IS THE PROPERTY OF HARSCO TRACK TECHNOLOGIES AND EMBODIES CONFIDENTIAL INFORMATION, TRADE SECRET INFORMATION, AND/OR KNOW-HOW THAT IS THE PROPERTY OF HARSCO TRACK TECHNOLOGIES. BY ACCEPTING THIS DRAWING OR DOCUMENT, THE RECIPIENT AGREES (1) NOT TO PROVIDE, OR OTHERWISE MAKE AVAILABLE, THE DRAWING OR DOCUMENT, OR ANY INFORMATION OR KNOW-HOW EMBODIED THEREIN, TO ANY THIRD PARTY AND (2) NOT TO REPRODUCE OR USE THE DRAWING OR DOCUMENT TO MANUFACTURE ANY APPARATUS OR DEVICE, WITHOUT THE PRIOR WRITTEN AUTHORIZATION OF HARSCO TRACK TECHNOLOGIES.

IMPLIED TOLERANCES
ALL DIMENSIONS ARE IN INCHES - TOLERANCE UNLESS OTHERWISE SPECIFIED

NOMINAL SIZE RANGE		INCH PLUS OR MINUS		NOMINAL SIZE RANGE		METRIC PLUS OR MINUS	
OVER	TO	2 PLACE DECIMAL	3 PLACE DECIMAL	OVER	TO	1 PLACE DECIMAL	2 PLACE DECIMAL
0	6	.03	.005	0	150	.8	.127
6	24	.04	.008	150	600	1.0	.203
24	-	.06	.010	-	600	1.5	.254

UNLESS OTHERWISE SPECIFIED ALL MACHINED SURFACES WILL HAVE:
A SURFACE FINISH OF 125 MICROINCHES
ANGULAR TOLERANCE OF +- 30'
CONCENTRICITY WITHIN .010

THIRD ANGLE PROJECTION

UNLESS OTHERWISE SPECIFIED ALL WELDS SHOULD ADHERE TO THE LATEST HTT WELDING SPECIFICATION (0)

CHANGE	R/L	REVISION	DATE
100967	A	RELEASE	3/10/07
101042	B	ADD DWG & ITEMS 5, 143- 144 REMOVED IT 105 (A0059001) QTY 6 & IT 106 (A0061006) QTY 4 IT 8 & 9 QTY WAS 22, IT 15 QTY WAS 23, IT 20 QTY WAS 26, IT 23 QTY WAS 3, IT 24 QTY WAS 19, IT 43 QTY WAS 4 REMOVED DUP ITEMS 101, 102, 138 & 140	18 Apr 07
101152	C	NO CHANGE	

Description: CAB ASSEMBLY
Drawing Number: ----------
Machine Type: MK VI NZ 42
Model: 4013200.asm
Drawn: JROWELL
Date Drawn: 3/1/07
Weight: ----------
Scale: -----
APVD Dwg: JOC
APVD Chkg: JOC
Mat'l

HTT
Harsco Track Technologies
Harsco
Columbia, SC

Part Number: 4013200
Size: D
Sheet: 1 of 5

Plotted by cjwolf on 8/20/2007 4013200.dft

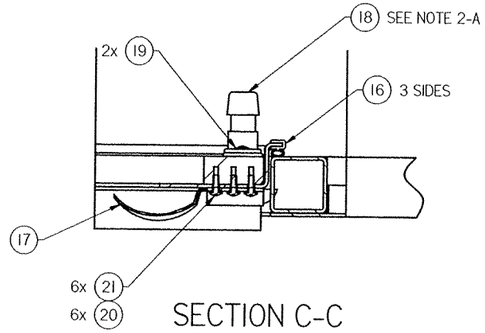

SECTION C-C

SEE SHEET2

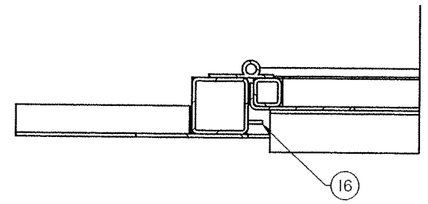

SECTION D-D

SEE SHEET 2

NOTES:

2-A CUT 5/16 SQUARE BAR OF ITEM 28 FLUSH WITH FRONT OF ITEM 27.

2-B CAULK ALL EXTERIOR SEAMS WITH PAINTABLE CAULK IG8120Y011.

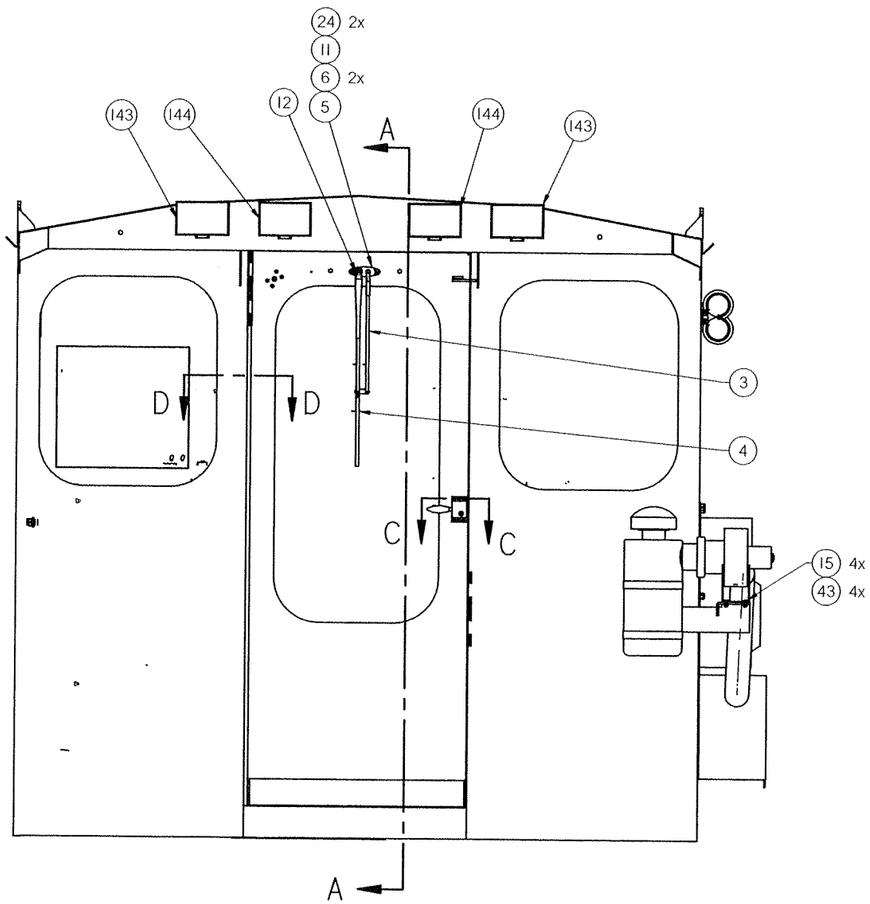

SEE SHEET 3

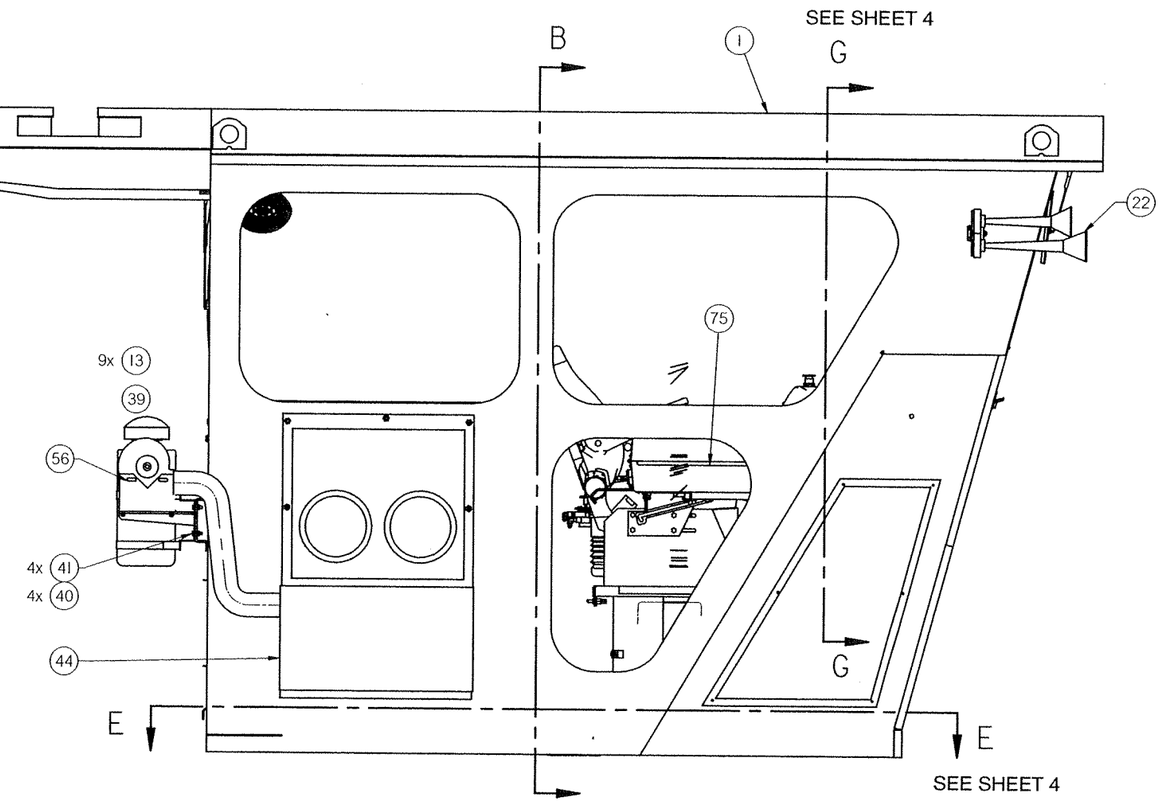

SEE SHEET 4

SEE SHEET 3

CONFIDENTIAL
© COPYRIGHT 2001 HARSCO TRACK TECHNOLOGIES. THIS DRAWING OR DOCUMENT IS THE PROPERTY OF HARSCO TRACK TECHNOLOGIES AND EMBODIES CONFIDENTIAL INFORMATION, TRADE SECRET INFORMATION, AND/OR KNOW-HOW THAT IS THE PROPERTY OF HARSCO TRACK TECHNOLOGIES. BY ACCEPTING THIS DRAWING OR DOCUMENT, THE RECIPIENT AGREES (1) NOT TO PROVIDE, OR OTHERWISE MAKE AVAILABLE, THE DRAWING OR DOCUMENT, OR ANY INFORMATION OR KNOW-HOW EMBODIED THEREIN, TO ANY THIRD PARTY AND (2) NOT TO REPRODUCE OR USE THE DRAWING OR DOCUMENT TO MANUFACTURE ANY APPARATUS OR DEVICE, WITHOUT THE PRIOR WRITTEN AUTHORIZATION OF HARSCO TRACK TECHNOLOGIES.

SOLID EDGE DRAWING

IMPLIED TOLERANCES
ALL DIMENSIONS ARE IN INCHES - TOLERANCE UNLESS OTHERWISE SPECIFIED

INCH NOMINAL SIZE RANGE OVER	TO	INCH PLUS OR MINUS 2 PLACE DECIMAL	INCH PLUS OR MINUS 3 PLACE DECIMAL	METRIC NOMINAL SIZE RANGE OVER	TO	METRIC PLUS OR MINUS 1 PLACE DECIMAL	METRIC PLUS OR MINUS 2 PLACE DECIMAL
0	6	.03	.005	0	150	.8	.127
6	24	.04	.008	150	600	1.0	.203
24	-	.06	.010	-	600	1.5	.254

UNLESS OTHERWISE SPECIFIED ALL MACHINED SURFACES WILL HAVE:
A SURFACE FINISH OF 125 MICROINCHES
ANGULAR TOLERANCE OF ± .50°
CONCENTRICITY WITHIN .010

THIRD ANGLE PROJECTION

UNLESS OTHERWISE SPECIFIED ALL WELDS SHOULD ADHERE TO THE LATEST HTT WELDING SPECIFICATION 101

CHANGE	R/L	REVISION	DATE
100967	A	RELEASE	3/10/07
101042	B	ADD DWG SHT 2	18 Apr 07
101152	C	NO CHANGE	

Description: CAB ASSEMBLY
Drawing Number: ----------
Model: 4013200.asm
Weight: ----------
Mat'l
Machine Type: MK VI NZ 42
Scale: ------
Drawn: JROWELL Date Drawn: 3/1/07
APVD Dwg: JOC APVD Ctl/Ng: JOC

HTT
Harsco Track Technologies
Harsco
Columbia, SC

Part Number: 4013200 Size: D Sheet: 2 of 5

Plotted by cjwolf on 8/20/2007 4013200.dft

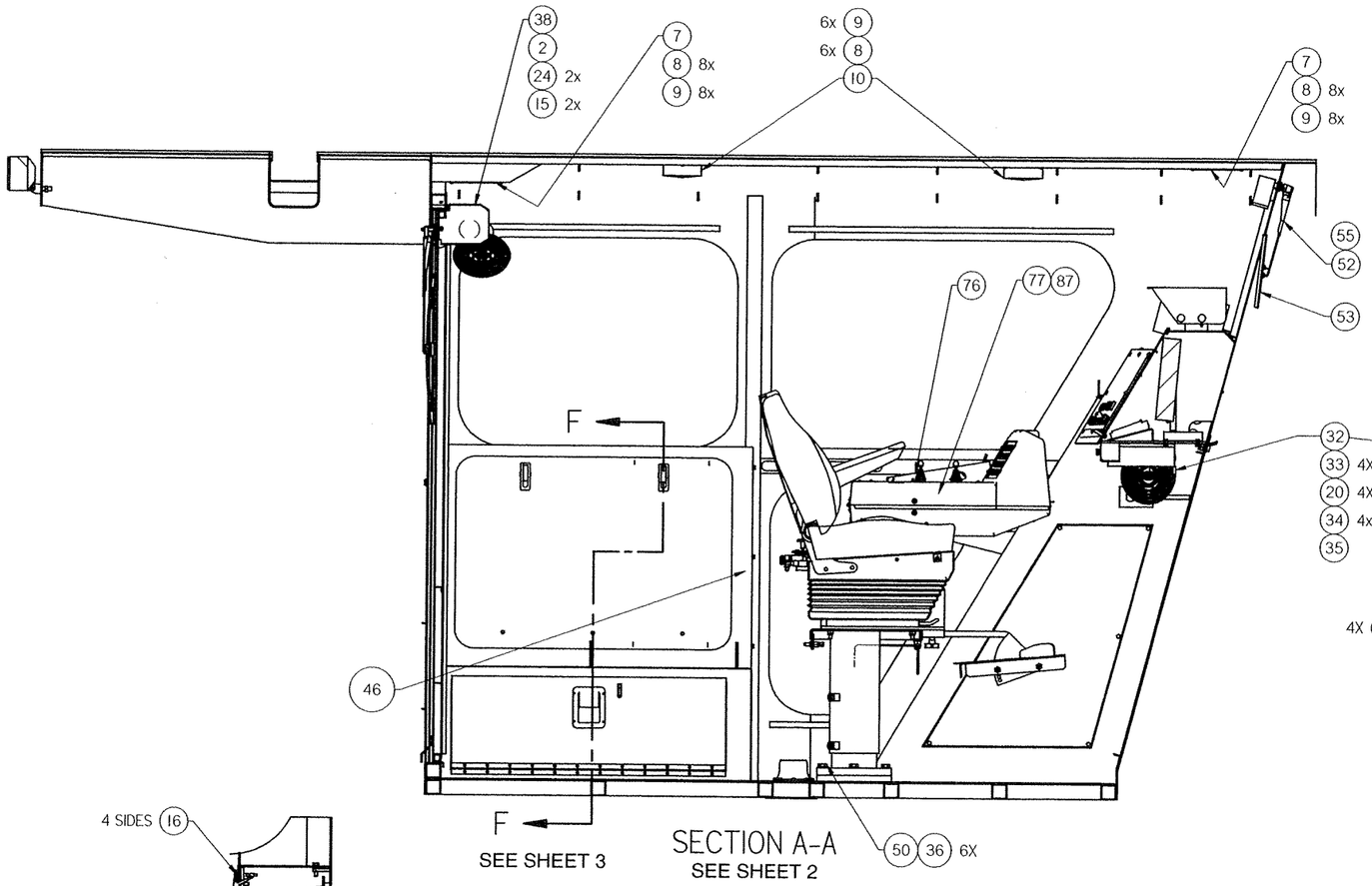

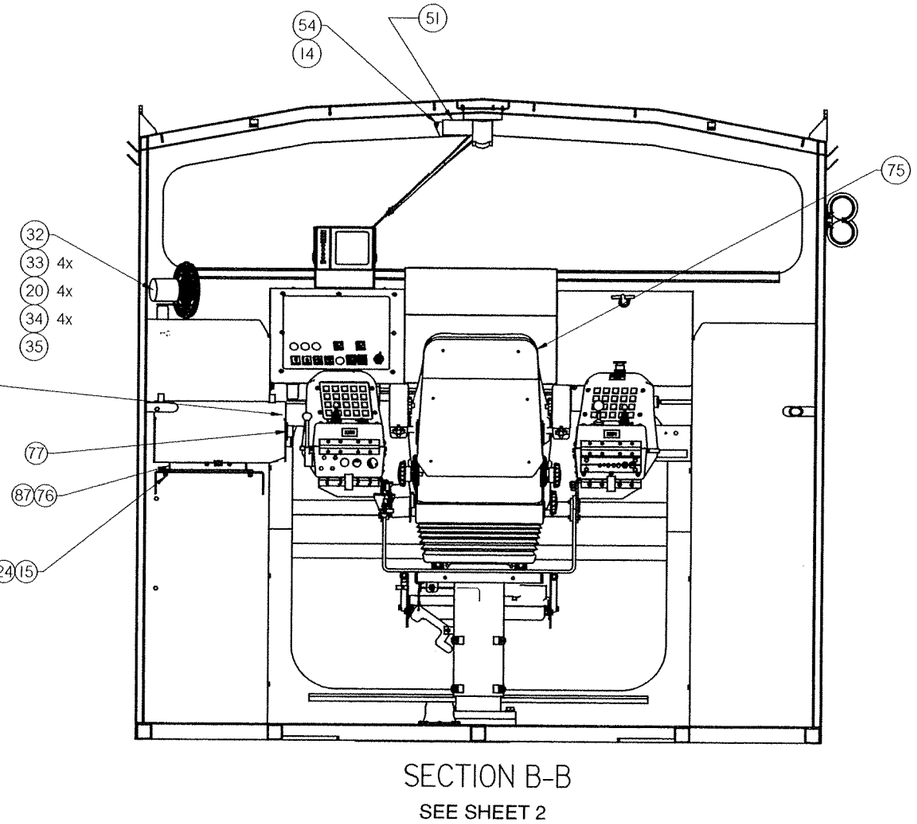

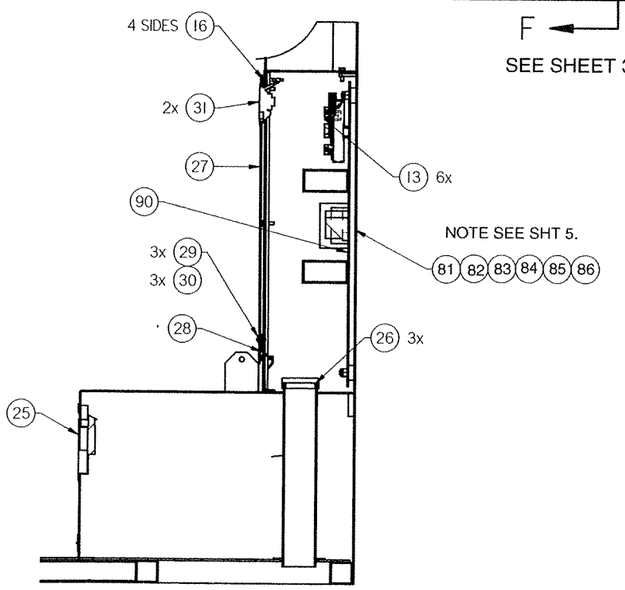

NOTE:

3-A DRILL MOUNTING HOLES AS NEEDED TO MOUNT ELECTRIC FAN COMPONENTS AS SHOWN.

3-B DRILL & TAPPED (8) MOUNTING HOLES IN 1" X 2" CHANNEL FOR A 3/8-16 HHCS AS SHOWN; DRILL (8) 3/8 DIA. MOUNTING HOLES IN SIDE INSET AS SHOWN;

SOLID EDGE DRAWING

CONFIDENTIAL
© COPYRIGHT 2001 HARSCO TRACK TECHNOLOGIES. THIS DRAWING OR DOCUMENT IS THE PROPERTY OF HARSCO TRACK TECHNOLOGIES AND EMBODIES CONFIDENTIAL INFORMATION, TRADE SECRET INFORMATION, AND/OR KNOW-HOW THAT IS THE PROPERTY OF HARSCO TRACK TECHNOLOGIES. BY ACCEPTING THIS DRAWING OR DOCUMENT, THE RECIPIENT AGREES (1) NOT TO PROVIDE, OR OTHERWISE MAKE AVAILABLE, THE DRAWING OR DOCUMENT, OR ANY INFORMATION OR KNOW-HOW EMBODIED THEREIN, TO ANY THIRD PARTY AND (2) NOT TO REPRODUCE OR USE THE DRAWING OR DOCUMENT TO MANUFACTURE ANY APPARATUS OR DEVICE, WITHOUT THE PRIOR WRITTEN AUTHORIZATION OF HARSCO TRACK TECHNOLOGIES.

IMPLIED TOLERANCES
ALL DIMENSIONS ARE IN INCHES - TOLERANCE UNLESS OTHERWISE SPECIFIED

NOMINAL SIZE RANGE		INCH PLUS OR MINUS			NOMINAL SIZE RANGE		METRIC PLUS OR MINUS	
OVER	TO	2 PLACE DECIMAL	3 PLACE DECIMAL		OVER	TO	1 PLACE DECIMAL	2 PLACE DECIMAL
0	6	.03	.005		0	150	.8	.127
6	24	.04	.008		150	600	1.0	.203
24	-	.06	.010		-	600	1.5	.254

UNLESS OTHERWISE SPECIFIED ALL MACHINED SURFACES WILL HAVE:
A SURFACE FINISH OF 125 MICROINCHES
ANGULAR TOLERANCE OF ± .50°
CONCENTRICITY WITHIN .010

THIRD ANGLE PROJECTION

UNLESS OTHERWISE SPECIFIED ALL WELDS SHOULD ADHERE TO THE LATEST HTT WELDING SPECIFICATION 121

CHANGE	R/L	REVISION	DATE
100967	A	RELEASE	3/10/07
101042	B	ADD DWG SHT 3	18 Apr 07
101152	C	NO CHANGE	

Description: CAB ASSEMBLY
Drawing Number: ----------
Machine Type: MK VI NZ 42
Model: 4013200.asm
Weight: ----------
Scale: -----
Drawn: JROWELL
Date Drawn: 3/1/07
APVD Dwg: JOC
APVD Chkg: JOC
Mat'l

HTT
Harsco Track Technologies
Harsco
Columbia, SC

Part Number: 4013200
Size: D
Sheet: 3 of 5

Plotted by cjwolf on 8/20/2007 4013200.dft

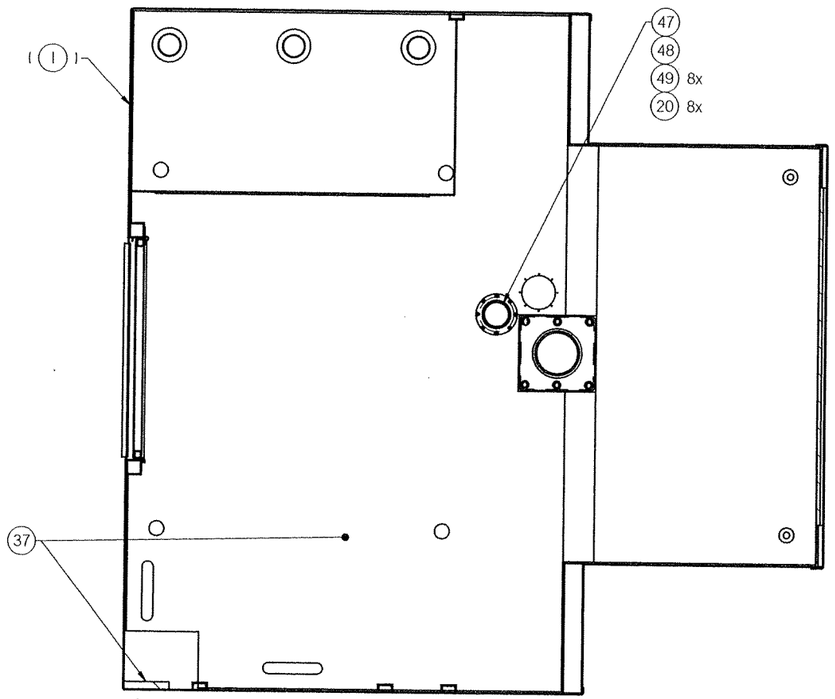

SECTION E-E

(FLOOR)

SEE SHEET 2

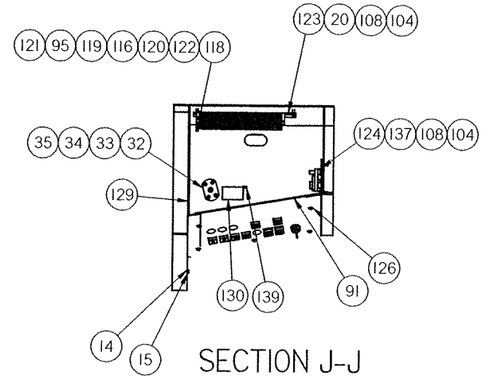

SECTION J-J

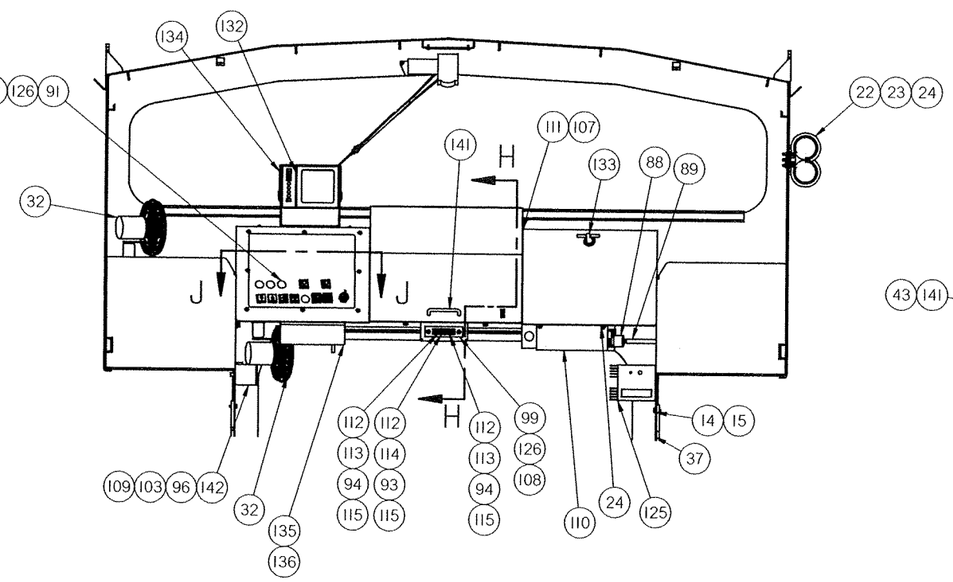

SECTION G-G

SEE SHEET 3

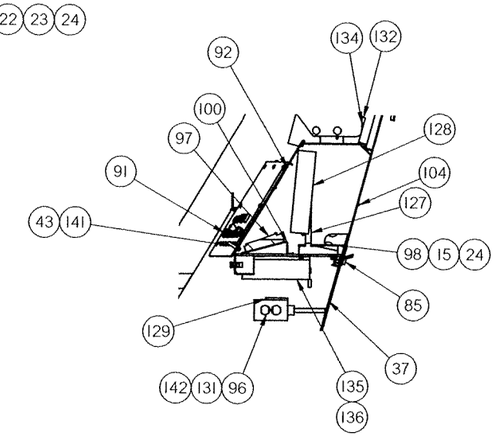

SECTION H-H

CONFIDENTIAL

© COPYRIGHT 2001 HARSCO TRACK TECHNOLOGIES. THIS DRAWING OR DOCUMENT IS THE PROPERTY OF HARSCO TRACK TECHNOLOGIES AND EMBODIES CONFIDENTIAL INFORMATION, TRADE SECRET INFORMATION, AND/OR KNOW-HOW THAT IS THE PROPERTY OF HARSCO TRACK TECHNOLOGIES. BY ACCEPTING THIS DRAWING OR DOCUMENT, THE RECIPIENT AGREES (1) NOT TO PROVIDE, OR OTHERWISE MAKE AVAILABLE, THE DRAWING OR DOCUMENT, OR ANY INFORMATION OR KNOW-HOW EMBODIED THEREIN, TO ANY THIRD PARTY AND (2) NOT TO REPRODUCE OR USE THE DRAWING OR DOCUMENT TO MANUFACTURE ANY APPARATUS OR DEVICE, WITHOUT THE PRIOR WRITTEN AUTHORIZATION OF HARSCO TRACK TECHNOLOGIES.

SOLID EDGE DRAWING

IMPLIED TOLERANCES

ALL DIMENSIONS ARE IN INCHES - TOLERANCE UNLESS OTHERWISE SPECIFIED

NOMINAL SIZE RANGE		INCH PLUS OR MINUS		NOMINAL SIZE RANGE		METRIC PLUS OR MINUS	
OVER	TO	2 PLACE DECIMAL	3 PLACE DECIMAL	OVER	TO	1 PLACE DECIMAL	2 PLACE DECIMAL
0	6	.03	.005	0	150	.8	.127
6	24	.04	.008	150	600	1.0	.203
24	-	.06	.010	-	600	1.5	.254

UNLESS OTHERWISE SPECIFIED ALL MACHINED SURFACES WILL HAVE: A SURFACE FINISH OF 125 MICROINCHES ANGULAR TOLERANCE OF ± 30' CONCENTRICITY WITHIN .010

THIRD ANGLE PROJECTION

UNLESS OTHERWISE SPECIFIED ALL WELDS SHOULD ADHERE TO THE LATEST NTT WELD SPG SPECIFICATION 101

CHANGE	R/L	REVISION	DATE
100967	A	RELEASE	3/10/07
101042	B	ADD DWG SHT 4	18 Apr 07
101152	C	NO CHANGE	

Description: CAB ASSEMBLY

Drawing Number: ----------

Model: 4013200.asm

Weight: ----------

Scale: -----

Mat'l:

Machine Type: MK VI NZ 42

Drawn: JROWELL 3/1/07

Date Drawn:

APVD Dwg: JOC

APVD Chkg: JOC

HTT
Harsco Track Technologies
Harsco
Columbia, SC

Part Number: 4013200 | Size: D | Sheet: 4 of 5

Plotted by cjwolf on 8/20/2007 4013200.dft

CABLE CONSTRUCTION CHART

		BOX END			DEVICE END			CABLE	
CABLE NO.	WIRE NOS.	FROM	ITEM(QTY)	OUTER INSL STRIP (INCHES)	TO	ITEM(QTY)	OUTER INSL STRIP (INCHES)	ITEM (QTY) (FEET)	CABLE P/N
CL36	0212,0302,0314,0315, 0316,0317,0502,0504, 0612,0614,0909,1608, 1611,1613,SP1-10	ECP		12	MCB	84 (1)	12	83 (25)	4013200CL36
CL27	L1, NEUTRAL,GND	INVERTER	88 (1)		FITTING BOX ECP	46 (1)		89 (4)	40113200CL27

WIRE CONSTRUCTION CHART

CL34		BOX END		DEVICE END		CABLE		CABLE P/N
WIRE NOS.	* LENGTH (FT)	FROM	ITEM (QTY)	TO	ITEM (QTY)	LOOM(FT) ITEM	WIRE ITEM	4013200CL34
0601	20	MCB		REAR DRIVE LT	85 (1)	81 82	86	
0212	15	MCB		DOOR DEFROST FAN	--	-- --	86	
0207	18	MCB		DOME LT	--	-- --	86	
0212	18	MCB		FR WIPER MOTOR	--	-- --	86	
0502	18	MCB		FR WIPER MOTOR	--	-- --	86	
000	20	MCB		REAR LT	--	-- --	86	
0212	18	MCB		DOOR WIPER MOTOR	--	-- --	86	
0504	18	MCB		DOOR WIPER MOTOR	--	-- --	86	

WIRE CONSTRUCTION CHART

		BOX END		DEVICE END		
WIRE NOS.	* LENGTH (FT)	FROM	ITEM (QTY)	TO	ITEM (QTY)	WIRE ITEM
0212	5	ECP	N/A	DEFROST FAN#1	N/A	86
0212	5	ECP		DEFROST FAN#2		86

NOTES:

5-A INSTALL ALL WIRES IN CAB, INCLUDING OPTIONS.

5-B USE #000 WIRE FOR GROUNDING TRAVEL LIGHT.

5-C MARK BOTH ENDS OF WIRES WITH WIRE NUMBERS AND MARK CABLE WITH COMPLETE PART N UMBER.

5-D WHEN ORDERING REPLACEMENT CABLE, USE THE CABLE PART NUMBER. FOR EXAMPLE, TO ORDER CL36 USE PART NUMBER 4013200CL36.

CONFIDENTIAL
© COPYRIGHT 2001 HARSCO TRACK TECHNOLOGIES. THIS DRAWING OR DOCUMENT IS THE PROPERTY OF HARSCO TRACK TECHNOLOGIES AND EMBODIES CONFIDENTIAL INFORMATION, TRADE SECRET INFORMATION, AND/OR KNOW HOW THAT IS THE PROPERTY OF HARSCO TRACK TECHNOLOGIES. BY ACCEPTING THIS DRAWING OR DOCUMENT, THE RECIPIENT AGREES (1) NOT TO PROVIDE, OR OTHERWISE MAKE AVAILABLE, THE DRAWING OR DOCUMENT, OR ANY INFORMATION OR KNOW HOW EMBODIED THEREIN, TO ANY THIRD PARTY AND (2) NOT TO REPRODUCE OR USE THE DRAWING OR DOCUMENT TO MANUFACTURE ANY APPARATUS OR DEVICE, WITHOUT THE PRIOR WRITTEN AUTHORIZATION OF HARSCO TRACK TECHNOLOGIES.

SOLID EDGE DRAWING

IMPLIED TOLERANCES
ALL DIMENSIONS ARE IN INCHES - TOLERANCE UNLESS OTHERWISE SPECIFIED

NOMINAL SIZE RANGE		INCH PLUS OR MINUS		NOMINAL SIZE RANGE		METRIC PLUS OR MINUS	
OVER	TO	2 PLACE DECIMAL	3 PLACE DECIMAL	OVER	TO	1 PLACE DECIMAL	2 PLACE DECIMAL
0	6	.03	.005	0	150	.8	.127
6	24	.04	.008	150	600	1.0	.203
24	-	.06	.010	-	600	1.5	.254

UNLESS OTHERWISE SPECIFIED ALL MACHINED SURFACES WILL HAVE:
A SURFACE FINISH OF 125 MICROINCHES
ANGULAR TOLERANCE OF ± .50°
CONCENTRICITY WITHIN .013

THIRD ANGLE PROJECTION

UNLESS OTHERWISE SPECIFIED ALL WELDS SHOULD ADHERE TO THE LATEST HTT WELDING SPECIFICATION 101

CHANGE	R/L	REVISION	DATE
100967	A	RELEASE	3/10/07
101042	B	ADD DWG SHT 5	18 Apr 07
101152	C	DELETED BEACON & WIRING. CL36 DEL. WIRES # 03B02,03B03,1404,1405,1502,1504 ADDED WIRES # 0315,0316,0317,0612,0614. CL P/N WAS 4008723CL26, CL27 & 34	7/29/07

Description: CAB ASSEMBLY
Drawing Number: ----------
Model: 4013200.asm
Weight: ----------
Scale: -----
Material:
Machine Type: MK VI NZ 42
Drawn: JROWELL
Date Drawn: 3/1/07
APVD Dwg: JOC
APVD Chkg: JOC

HTT
Harsco Track Technologies
Harsco
Columbia, SC

Part Number: 4013200
Size: D
Sheet: 5 of 5

Plotted by cjwolf on 8/20/2007 4013200.dft

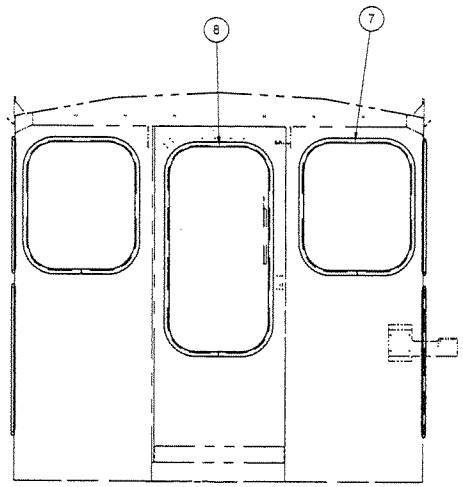

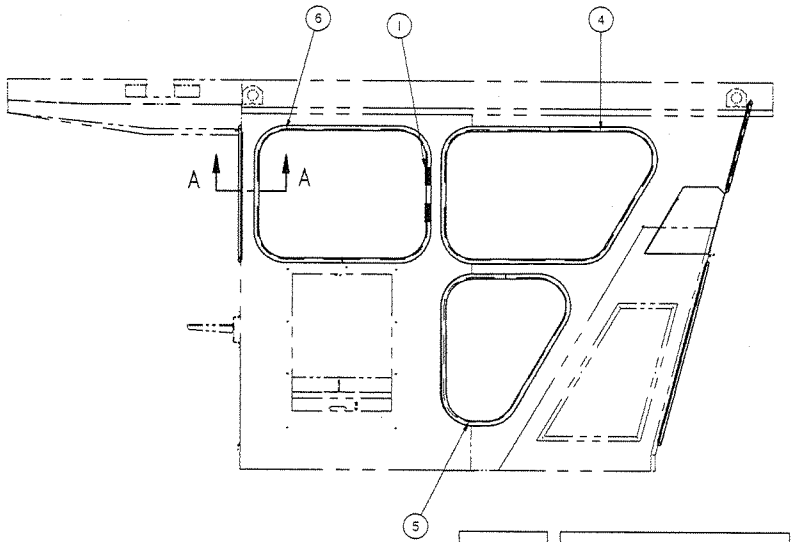

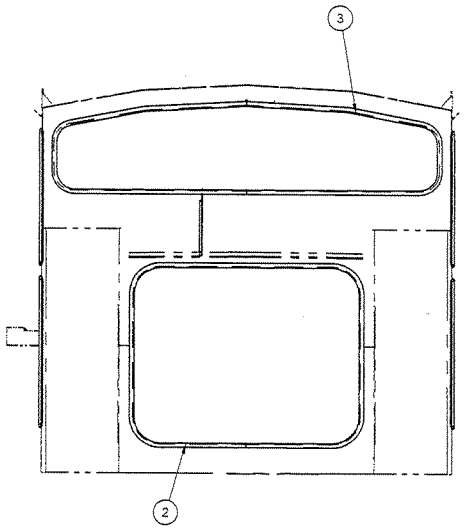

It No	Part Number	Description	Qty
8	4013710	GLASS CAB DOOR	1
7	4013709	GLASS CAB REAR	2
6	4013708	GLASS SIDE REAR	2
5	4013707	GLASS SIDE LOWER	2
4	4013706	GLASS SIDE UPPER	2
3	H7116Y01	FRONT UPPER GLASSS	1
2	H7114Y01	FRONT LOWER GLASS	1
1	0-3044002-0-01	WEATHERSEAL	155

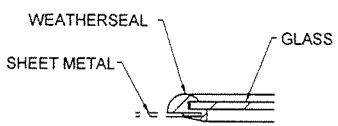

SECTION A-A

ALL PANELS ARE CLEAR 1/4" LAMINATED SAFETY GLASS

APPLY SEALANT (D3601Y01) BETWEEN THE WEATHERSEAL & OUTSIDE CAB WALL AND WEATHERSEAL & WINDOW

CONFIDENTIAL
© COPYRIGHT 2001 HARSCO TRACK TECHNOLOGIES. THIS DRAWING OR DOCUMENT IS THE PROPERTY OF HARSCO TRACK TECHNOLOGIES AND EMBODIES CONFIDENTIAL INFORMATION, TRADE SECRET INFORMATION, AND/OR KNOWHOW THAT IS THE PROPERTY OF HARSCO TRACK TECHNOLOGIES. BY ACCEPTING THIS DRAWING OR DOCUMENT, THE RECIPIENT AGREES (1) NOT TO PROVIDE OR OTHERWISE MAKE AVAILABLE THE DRAWING OR DOCUMENT, OR ANY INFORMATION OR KNOWHOW EMBODIED THEREIN, TO ANY THIRD PARTY AND (2) NOT TO REPRODUCE OR USE THE DRAWING OR DOCUMENT TO MANUFACTURE ANY APPARATUS OR DEVICE, WITHOUT THE PRIOR WRITTEN AUTHORIZATION OF HARSCO TRACK TECHNOLOGIES.

SOLID EDGE DRAWING

IMPLIED TOLERANCES
ALL DIMENSIONS ARE IN INCHES - TOLERANCE UNLESS OTHERWISE SPECIFIED

INCH					METRIC				
DECIMAL	FRACTIONAL	PLUS OR MINUS			DECIMAL	FRACTIONAL	PLUS OR MINUS		
		1 PLACE	2 PLACE	3 PLACE			1 PLACE	2 PLACE	3 PLACE
0	0	±1	.005	.005	0	1/32	0	.12	
0	1/4	.5	.005	.005	.00	1/32	1.0	.10	
1/4	-	.25	.010	-	.000	1/2	.25		

THIRD ANGLE PROJECTION

CHANGE	REV	REVISION	DATE
ECN-100	A	RELEASE	XX-XX-XX

Description: CAB GLASS INSTL
Drawing Number: 4013704.asm
Machine Type: MK VI NZ 42
Model: 4013704.asm
Drawn: mcolelson
Date Drawn: XX-XX-XX
Weight: 151.0 lbm
Scale: 1:4
APVD Date: XXX
APVD Name: XXX
Material:

HTT
Harsco Track Technologies
Harsco
Columbia, SC

Part Number: 4013704
Size: D
Sheet: 1 of 1

Plotted by jrowell on 7/2/2007 4013704.dft

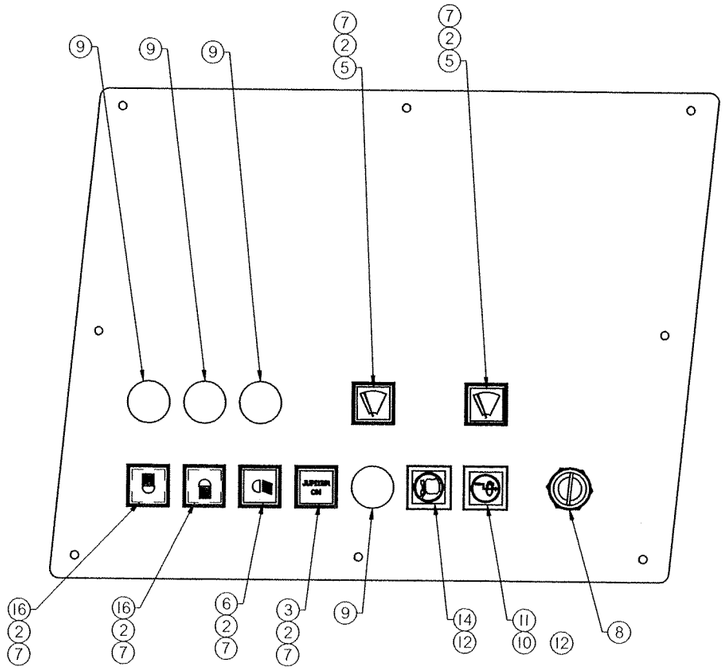

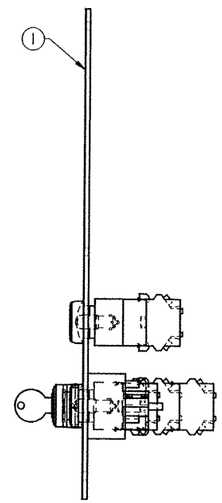

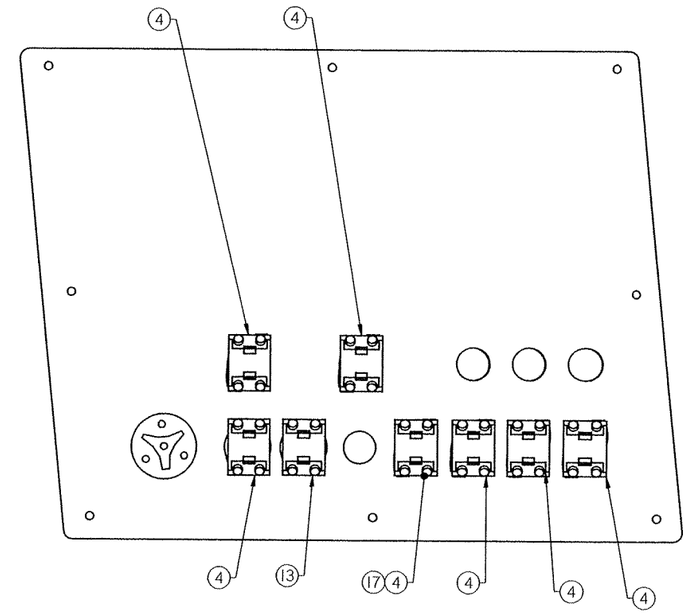

ITEM	PART NUMBER	DESCRIPTION	QTY
1	4009987	ENGINE CONTROL NAMEPLATE	1
2	A0655Y07	SWITCH, PB MAINT, YELLOW	6
3	H1828Y45	FILM INSERT, JUPITER ON	1
4	A0653Y01	CONTACT BLOCK, (NO NO)	7
5	A1920Y07	FILM INSERT, WIPER	2
6	A1920Y03	FILM INSERT, WORK LIGHT	1
7	0-3101019-0-09	MINIATURE BULB	6
8	L424256	IGNITION SWITCH	1
9	0-3274003-0-04	.875 DIA HOLE PLUG	4
10	A0655Y02	SWITH, P.B. MOM GREEN	1
11	C3904Y72	FILM INSERT, PERMSV STRT	1
12	A0655Y01	SWITCH, P.B. MOM, RED	1
13	A0653Y02	CONTACT BLOCK, (NC NC)	1
14	D6728Y82	FILM INS ENGINE STOP	1
16	A1920Y06	FILM INSERT, HEADLIGHT	2
17	A0653Y03	CONTACT BLOCK, (NO NC)	1

SOLID EDGE DRAWING

CONFIDENTIAL
© COPYRIGHT 2001 HARSCO TRACK TECHNOLOGIES. THIS DRAWING OR DOCUMENT IS THE PROPERTY OF HARSCO TRACK TECHNOLOGIES AND EMBODIES CONFIDENTIAL INFORMATION, TRADE SECRET INFORMATION, AND/OR KNOW-HOW THAT IS THE PROPERTY OF HARSCO TRACK TECHNOLOGIES. BY ACCEPTING THIS DRAWING OR DOCUMENT, THE RECIPIENT AGREES (1) NOT TO PROVIDE, OR OTHERWISE MAKE AVAILABLE, THE DRAWING OR DOCUMENT, OR ANY INFORMATION OR KNOW-HOW EMBODIED THEREIN, TO ANY THIRD PARTY AND (2) NOT TO REPRODUCE OR USE THE DRAWING OR DOCUMENT TO MANUFACTURE ANY APPARATUS OR DEVICE, WITHOUT THE PRIOR WRITTEN AUTHORIZATION OF HARSCO TRACK TECHNOLOGIES.

IMPLIED TOLERANCES
ALL DIMENSIONS ARE IN INCHES - TOLERANCE UNLESS OTHERWISE SPECIFIED

NOMINAL SIZE RANGE		INCH PLUS OR MINUS			NOMINAL SIZE RANGE		METRIC PLUS OR MINUS	
OVER	TO	2 PLACE DECIMAL	3 PLACE DECIMAL		OVER	TO	1 PLACE DECIMAL	2 PLACE DECIMAL
0	6	.03	.005		0	150	.8	.13
6	24	.04	.006		150	600	1.0	.20
24	-	.06	.010		-	600	1.5	.25

UNLESS OTHERWISE SPECIFIED ALL MACHINED SURFACES WILL HAVE:
A SURFACE FINISH OF 125 MICROINCHES
ANGULAR TOLERANCE OF ± 30'
CONCENTRICITY WITHIN .010

THIRD ANGLE PROJECTION

UNLESS OTHERWISE SPECIFIED ALL WELDS SHOULD ADHERE TO THE LATEST HTT WELDING SPECIFICATION 101

CHANGE	RA	REVISION	DATE
100967	A	NEW RELEASE	3/1/07
ECN-101152	B	ADDED ITEM #17. ITEM 2 & 7 QTY. WAS 4. DEL. ITEM 15 # WAS A0655Y06	7/2/07

Description: ECP ASSEMBLY
Drawing Number: ----------
Machine Type: MARK VI
Model: 4013211.asm
Drawn: jcowell
Date Drawn: 3/1/07
Weight: 0.0 lbm
Scale: 1:4
APVD Dwg: JO'C
APVD Chg: JO'C
Mat'l:

HTT
Harsco Track Technologies
Harsco
Columbia, SC

Part Number: 4013211
Size: D
Sheet: 1 of 1

Plotted by wgrier on 8/20/2007 4013211.dft

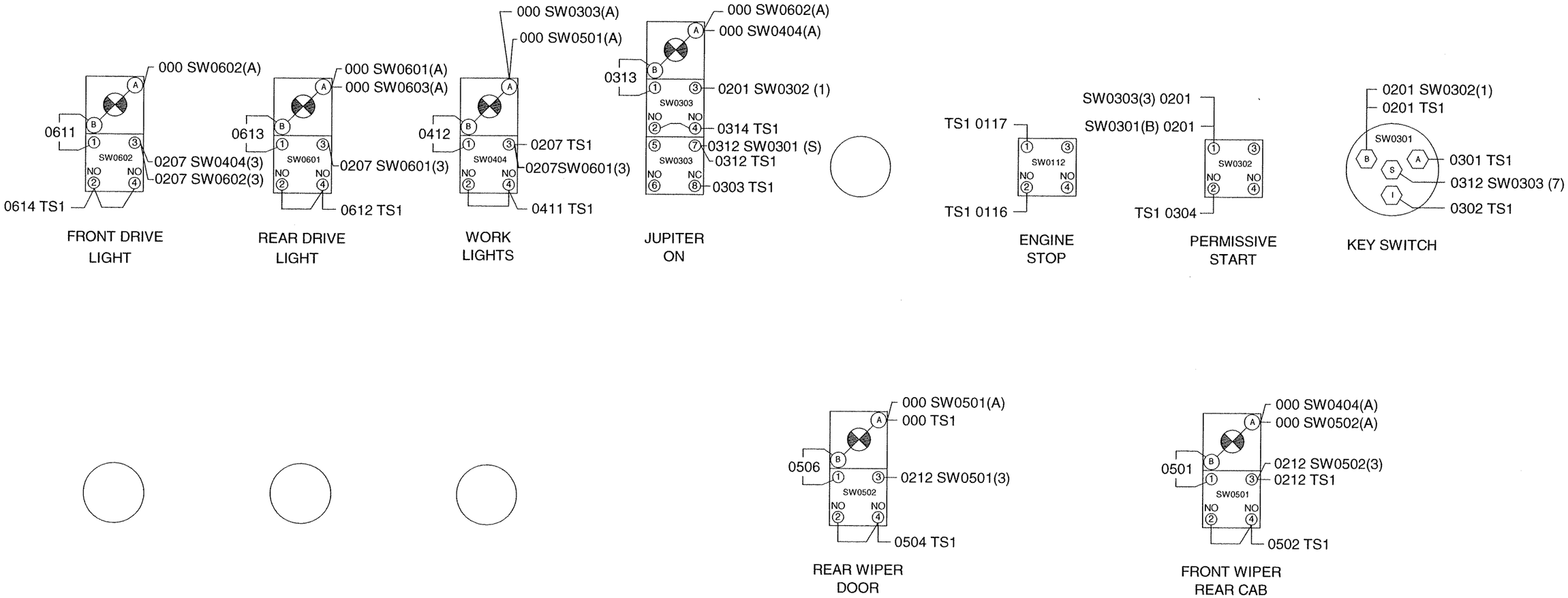

NOTES:

1.A) ALL WIRES TO BE NUMBERED AT BOTH ENDS.
1.B) ALL WIRES TO BE 16 AWG UNLESS OTHERWISE NOTED.
1.C) WIRING FOR;
4013200 - CAB CONTROL INSTALLATION
4013211 - ENGINE CONTROL PANEL ASSY

*** CONTINUED ON SHEET 2 ***

FOR REFERENCE ONLY

SOLID EDGE DRAWING

CONFIDENTIAL
© COPYRIGHT 2001 HARSCO TRACK TECHNOLOGIES. THIS DRAWING OR DOCUMENT IS THE PROPERTY OF HARSCO TRACK TECHNOLOGIES AND EMBODIES CONFIDENTIAL INFORMATION, TRADE SECRET INFORMATION, AND/OR KNOW-HOW THAT IS THE PROPERTY OF HARSCO TRACK TECHNOLOGIES. BY ACCEPTING THIS DRAWING OR DOCUMENT, THE RECIPIENT AGREES (1) NOT TO PROVIDE, OR OTHERWISE MAKE AVAILABLE, THE DRAWING OR DOCUMENT, OR ANY INFORMATION OR KNOW-HOW EMBODIED THEREIN, TO ANY THIRD PARTY AND (2) NOT TO REPRODUCE OR USE THE DRAWING OR DOCUMENT TO MANUFACTURE ANY APPARATUS OR DEVICE, WITHOUT THE PRIOR WRITTEN AUTHORIZATION OF HARSCO TRACK TECHNOLOGIES.

IMPLIED TOLERANCES
ALL DIMENSIONS ARE IN INCHES - TOLERANCE UNLESS OTHERWISE SPECIFIED

NOMINAL SIZE RANGE		INCH PLUS OR MINUS		NOMINAL SIZE RANGE		METRIC PLUS OR MINUS	
OVER	TO	2 PLACE DECIMAL	3 PLACE DECIMAL	OVER	TO	1 PLACE DECIMAL	2 PLACE DECIMAL
0	6	.03	.005	0	150	.8	.13
6	24	.04	.008	150	600	1.0	.20
24	-	.06	.010	-	600	1.5	.25

UNLESS OTHERWISE SPECIFIED ALL MACHINED SURFACES WILL HAVE; A SURFACE FINISH OF 125 MICROINCHES ANGULAR TOLERANCE OF ± .50° CONCENTRICITY WITHIN .010

THIRD ANGLE PROJECTION

UNLESS OTHERWISE SPECIFIED ALL WELDS SHOULD ADHERE TO THE LATEST AWS WELD WG SPECIFICATION 101

CHANGE	R/L	REVISION	DATE
101152	A	NEW RELEASE	6/28/07
101213	B	REVERSE WIRES 0612 AND 0614 ON SW 0601 & SW0602	8/08/07

Description: ECP WIRING
Drawing Number: ----------
Machine Type: MARK VI N.Z. 2007
Model: 4013840.dft
Weight:
Mat'l:
Scale: 1:4
Drawn: wgrier
Date Drawn: 6/28/07
APVD Dwg: WG
APVD Chkg: WG

HTT
Harsco Track Technologies
Harsco
Columbia, SC

Part Number: 4013840
Size: D
Sheet: 1 of 2

Plotted by wgrier on 8/20/2007 4013840.dft

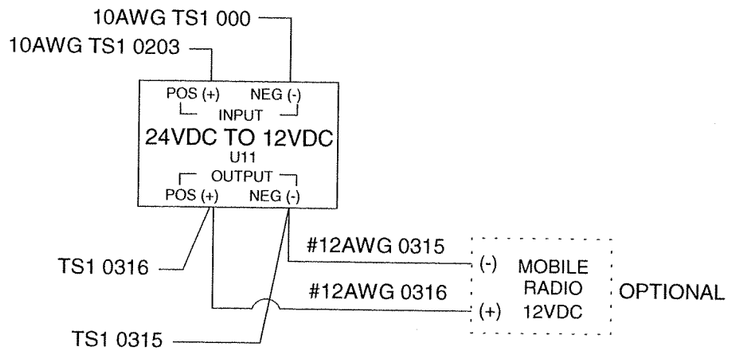

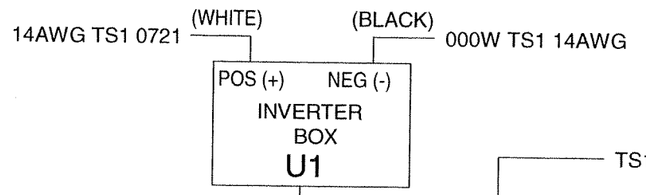

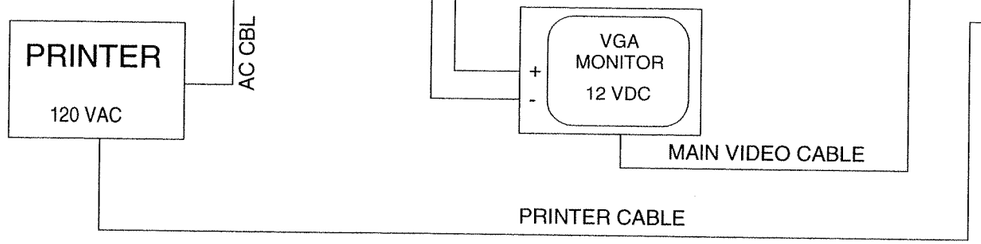

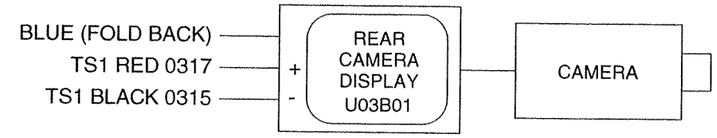

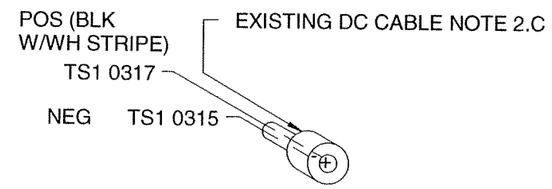

NOTES: (CONTINUED FROM SHEET 1)

2.A) ALL WIRES TO BE NUMBERED AT BOTH ENDS.
2.B) ALL WIRES TO BE 16 AWG UNLESS OTHERWISE NOTED.
2.C) EXISTING DC CABLE FROM DISPLAY: CUT END OFF OF ONE END OF DC CABLE. SEPARATE WIRES AND STRIP ENDS. CONNECT POWER WIRE TO POS AND GND WIRE TO NEG, AS SHOWN.

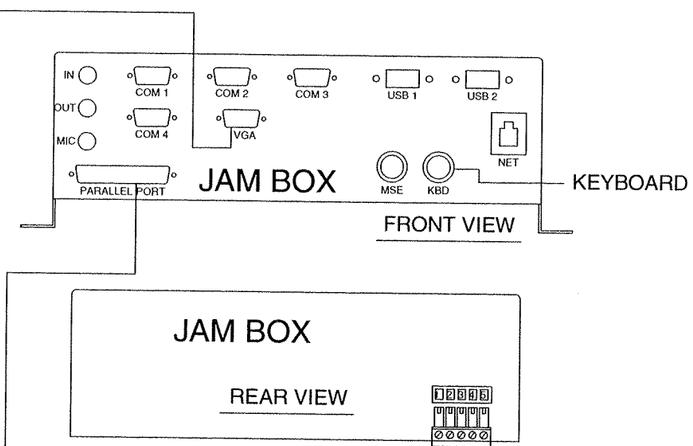

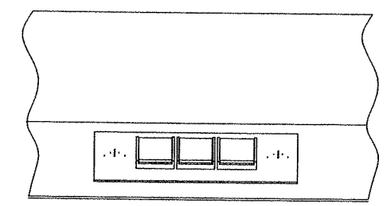

FIG 1

LIGHT INDICATOR PANEL FRONT VIEW

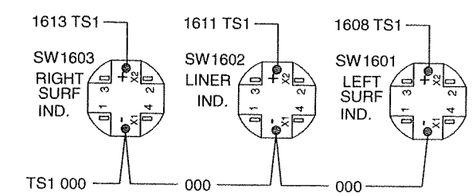

REAR VIEW, REF FIG 1 ABOVE

20 AWG
UNDER KEYBOARD

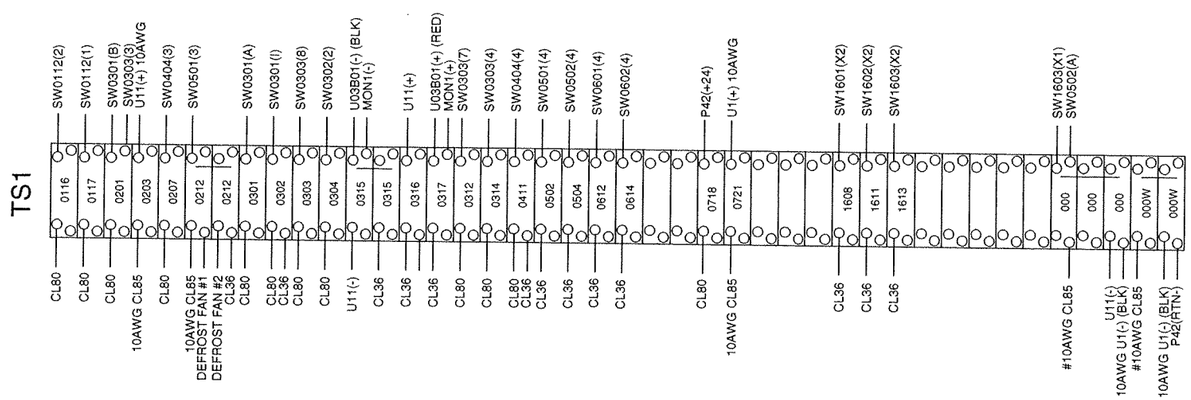

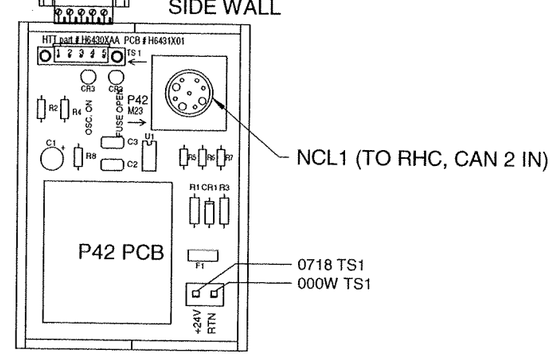

BACK PANEL

FOR REFERENCE ONLY

CONFIDENTIAL
© COPYRIGHT 2001 HARSCO TRACK TECHNOLOGIES. THIS DRAWING OR DOCUMENT IS THE PROPERTY OF HARSCO TRACK TECHNOLOGIES AND EMBODIES CONFIDENTIAL INFORMATION, TRADE SECRET INFORMATION, AND/OR KNOW-HOW THAT IS THE PROPERTY OF HARSCO TRACK TECHNOLOGIES. BY ACCEPTING THIS DRAWING OR DOCUMENT, THE RECIPIENT AGREES (1) NOT TO PROVIDE, OR OTHERWISE MAKE AVAILABLE, THE DRAWING OR DOCUMENT, OR ANY INFORMATION OR KNOW-HOW EMBODIED THEREIN, TO ANY THIRD PARTY AND (2) NOT TO REPRODUCE OR USE THE DRAWING OR DOCUMENT TO MANUFACTURE ANY APPARATUS OR DEVICE, WITHOUT THE PRIOR WRITTEN AUTHORIZATION OF HARSCO TRACK TECHNOLOGIES.

IMPLIED TOLERANCES
ALL DIMENSIONS ARE IN INCHES - TOLERANCE UNLESS OTHERWISE SPECIFIED

NOMINAL SIZE RANGE		INCH PLUS OR MINUS		METRIC PLUS OR MINUS	
OVER	TO	2 PLACE DECIMAL	3 PLACE DECIMAL	OVER	TO	1 PLACE DECIMAL	2 PLACE DECIMAL
0	6	.03	.005	0	150	.8	.13
6	24	.04	.008	150	600	1.0	.20
24	-	.06	.010	-	600	1.5	.25

UNLESS OTHERWISE SPECIFIED ALL MACHINED SURFACES WILL HAVE; A SURFACE FINISH OF 125 MICROINCHES ANGULAR TOLERANCE OF ± 30' CONCENTRICITY WITHIN .010

THIRD ANGLE PROJECTION

UNLESS OTHERWISE SPECIFIED ALL WELDS SHOULD CONFORM TO THE LATEST HTT WELD ING SPECIFICATION 101

CHANGE	R/L	REVISION	DATE
101152	A	NEW RELEASE	6/28/07
101213	B	REVERSE WIRES 0612 AND 0614 ON SW 0601 & SW0602	8/08/07

Description: ECP WIRING
Drawing Number: ----------
Model: 4013840.dft
Weight:
Scale: 1:4
Machine Type: MARK VI N.Z. 2007
Drawn: wgrier
Date Drawn: 6/28/07
APVD Dwg: WG
APVD Mfg: WG
Mat'l

HTT
Harsco Track Technologies
Harsco
Columbia, SC

Part Number: 4013840
Size: D
Sheet: 2 of 2

SOLID EDGE DRAWING

Plotted by wgrier on 8/20/2007 4013840.dft

Item Number	Document Number	Title	Quantity
1	L420002	1/4MP-JIC FITTING 90	1
2	L420853	1/8 MP / 1/4 JIC 90 DEG	1
3	A3697Y01	KNOB, THREE ARM	1
4	4005578	SEAT CRADLE WELDMENT	1
5	0-3304195-0-01	1/4 JIC/1/8 FP BULKHD FIT.	1
6	L411444	INT PIPE/JIC 90 DEG	1
7	G0523Y01	RETAINER PLATE	2
8	B1637Y02	ARM REST LOCK, RIGHT	2
9	L41079	1/4 MNPT - MNPT ADAPTER	1
10	L422515	VALVE, SAFETY AND PARKING	1
11	A5443Y03	COMPRESSION TUBE FITTING	1
12	H6169W02	R/H CONSOLE BRKT	1
13	H6169W01	L/H CONSOLE BRKT	1
14	4007355	FOOT REST	1
15	G0485YAB	R/H SLIDE WLDT	1
16	G0485YAA	L/H SLIDE WLDT	1
17	D5491Y01	ANTISKID MAT	1
18	L40387	LOCKNUT, 3/8-16, HEAVY	6
19	B2379Y17	SEAT	1
20	4004899	SEAT STAND	1
21	Z752500-009	SHOULDER BOLT, 3/8 X 3/4	2
22	Z686508	RING	1
23	A1103Y01	WIRE ROPE SS 1/16 (FT)	1
24	A4577T02	SWAGE SLEEVE	2
25	A0036067	3/8-16 X 1 3/4 HHCS GR 5	6
26	A0036061	3/8-16 X 3/4" HHCS GR.5	2
27	A0061010	WASHER, 3/8 MEDIUM PLATED LOCK	4
28	A0055012	3/8-16 HEX NUT	4
29	A0050078	1/4-20 X 3/4 RD HD MS	8
30	L40237	LOCKNUT, 1/4-20, HEAVY	8
31	C5363WAK	FOOTSWITCH, M12 CONN	1
32	A0036065	3/8-16 X 1 1/4" HHCS GR.5	10
33	H7278WAA	L/H ARM CONSOLE ASSEMBLY	1
34	H7280WAA	R/H ARM CONSOLE ASSY	1
35	L423629	VALVE, HAND BRAKE	1
36*	C8713YAA	BRAKE BLOW DOWN VALVE	1

SOLID EDGE DRAWING

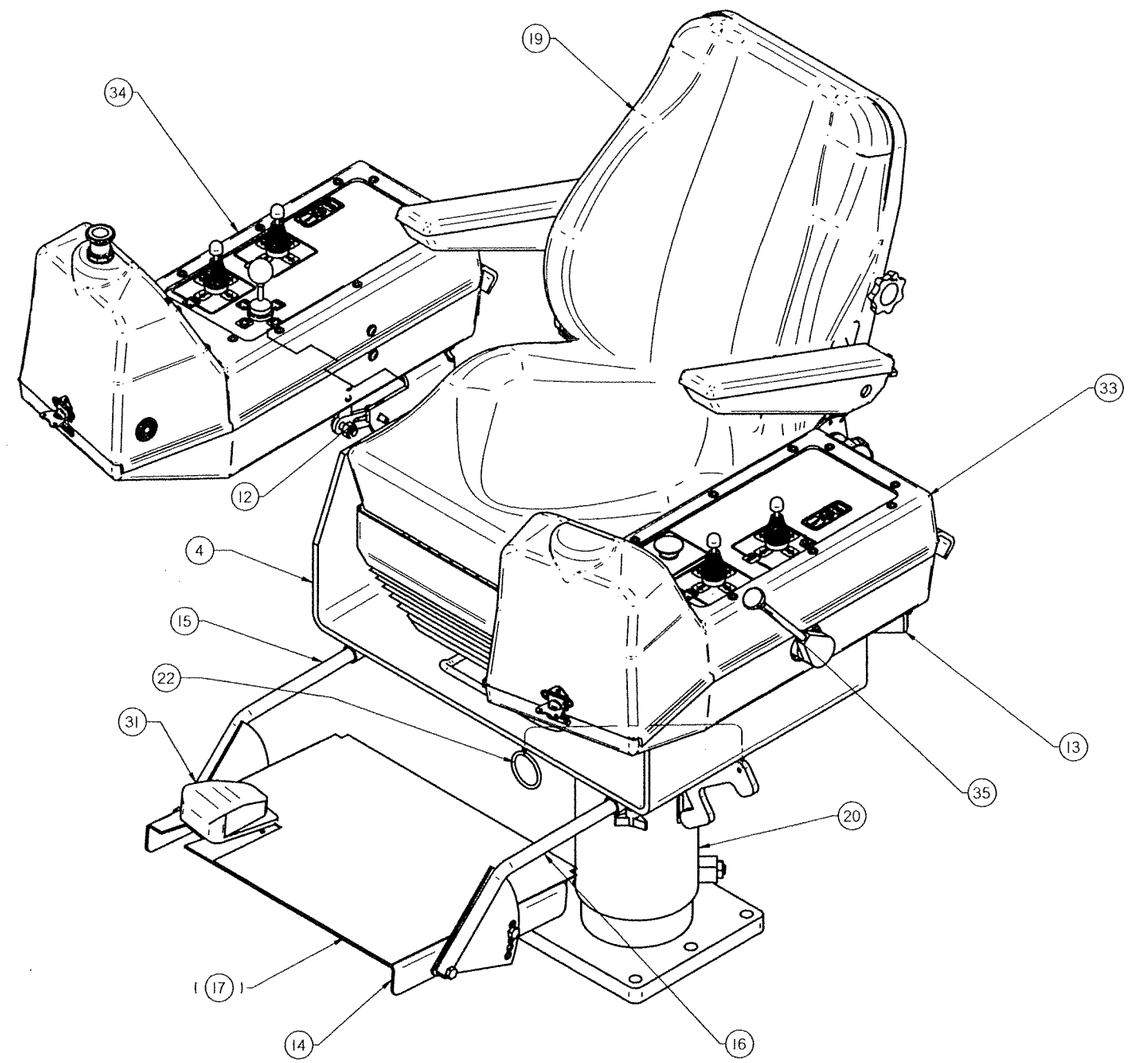

CONFIDENTIAL
© COPYRIGHT 2001 HARSCO TRACK TECHNOLOGIES. THIS DRAWING OR DOCUMENT IS THE PROPERTY OF HARSCO TRACK TECHNOLOGIES AND EMBODIES CONFIDENTIAL INFORMATION, TRADE SECRET INFORMATION, AND/OR KNOW-HOW THAT IS THE PROPERTY OF HARSCO TRACK TECHNOLOGIES. BY ACCEPTING THIS DRAWING OR DOCUMENT, THE RECIPIENT AGREES (1) NOT TO PROVIDE, OR OTHERWISE MAKE AVAILABLE, THE DRAWING OR DOCUMENT, OR ANY INFORMATION OR KNOW-HOW EMBODIED THEREIN, TO ANY THIRD PARTY AND (2) NOT TO REPRODUCE OR USE THE DRAWING OR DOCUMENT TO MANUFACTURE ANY APPARATUS OR DEVICE, WITHOUT THE PRIOR WRITTEN AUTHORIZATION OF HARSCO TRACK TECHNOLOGIES.

IMPLIED TOLERANCES
ALL DIMENSIONS ARE IN INCHES - TOLERANCE UNLESS OTHERWISE SPECIFIED

MILLIMETRE (MILLIMETRE)		INCH PLUS OR MINUS		MILLIMETRE PLUS OR MINUS		
OVER	TO	3 PLACE DECIMAL	2 PLACE DECIMAL	OVER	TO	3 PLACE DECIMAL	2 PLACE DECIMAL
0	6	.03	.005	0	150	.8	.127
6	24	.04	.008	150	600	1.0	.203
24	-	.06	.010	-	800	1.5	.254

UNLESS OTHERWISE SPECIFIED ALL MACHINED SURFACES SHALL HAVE A SURFACE FINISH OF 125 MICROINCHES ANGULAR TOLERANCE OF ± .50 CONCENTRICITY WITHIN .010

THIRD ANGLE PROJECTION

UNLESS OTHERWISE SPECIFIED ALL WELDS SHOULD ADHERE TO THE LATEST HTT WELDING SPECIFICATION 101

CHANGE	R/L	REVISION		DATE
13116.34	A	RELEASE		7-12-05
13116.50	B	ADDED ITS 33-35.	PJG/JOC	9-2-05
13116.57	C	QTY IT-1 WAS 1 & IT-36 WAS C8713YAA.	PJG/JOC	10-05-05

Description: SEAT ASSEMBLY
Drawing Number: ----------
Machine Type:
Model: 4009667.asm
Weight: ----------
Scale: 1:4
Drawn: rbhimer
Date Drawn: 7-12-05
APVD Dwg: AML
APVD Chkg: AML
Matl:

HTT
Harsco Track Technologies
Harsco
Columbia, SC

Part Number: 4009667
Size: D
Sheet: 1 of 2

Plotted by pgleaton on 1/19/2006 4009667.dft

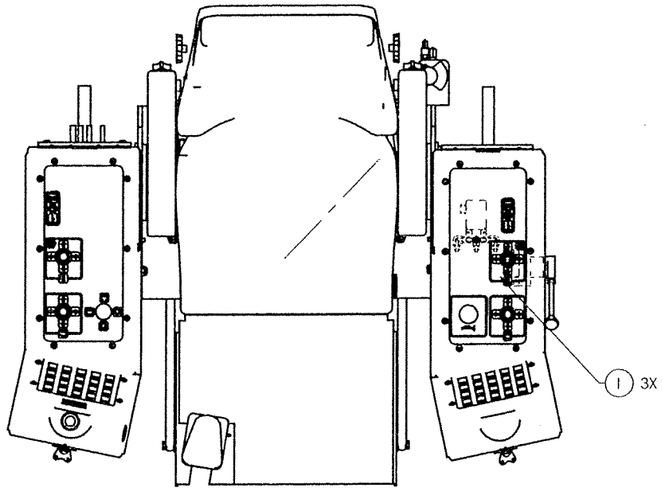

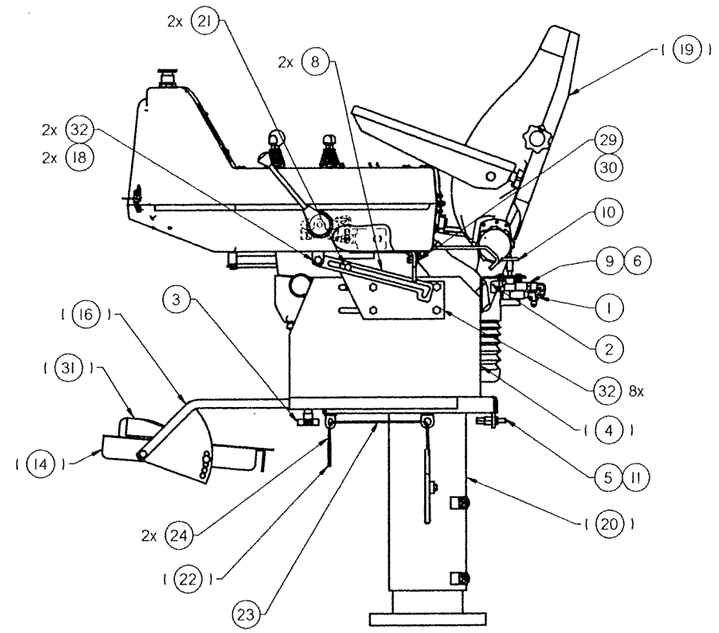

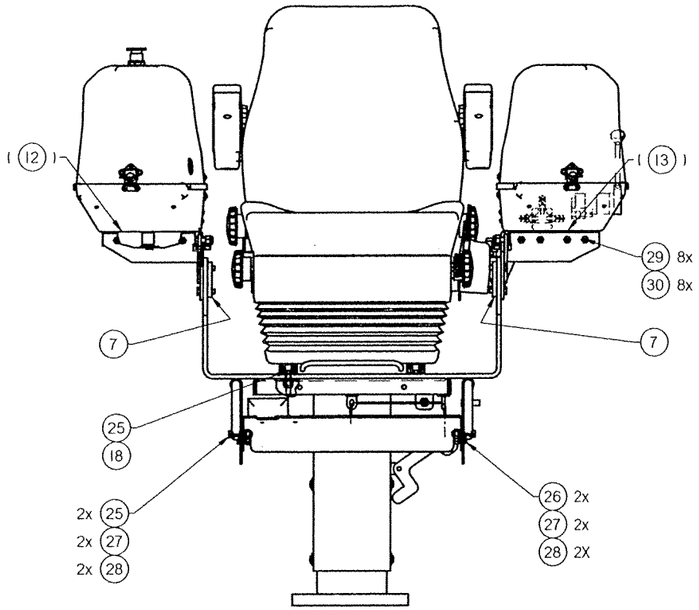

NOTE:

2-A. FOR AIR HOSE AND HOSE ENDS SEE MK VI HOSE KIT.
FOR AIR HOSE ROUTING SEE AIR SCHEMATIC, H7241W01

SOLID EDGE DRAWING

CONFIDENTIAL
© COPYRIGHT 2001 HARSCO TRACK TECHNOLOGIES. THIS DRAWING OR DOCUMENT IS THE PROPERTY OF HARSCO TRACK TECHNOLOGIES AND EMBODIES CONFIDENTIAL INFORMATION, TRADE SECRET INFORMATION, AND/OR KNOW-HOW THAT IS THE PROPERTY OF HARSCO TRACK TECHNOLOGIES. BY ACCEPTING THIS DRAWING OR DOCUMENT, THE RECIPIENT AGREES (1) NOT TO PROVIDE, OR OTHERWISE MAKE AVAILABLE, THE DRAWING OR DOCUMENT, OR ANY INFORMATION OR KNOW-HOW EMBODIED THEREIN, TO ANY THIRD PARTY AND (2) NOT TO REPRODUCE OR USE THE DRAWING OR DOCUMENT TO MANUFACTURE ANY APPARATUS OR DEVICE, WITHOUT THE PRIOR WRITTEN AUTHORIZATION OF HARSCO TRACK TECHNOLOGIES.

IMPLIED TOLERANCES
ALL DIMENSIONS ARE IN INCHES - TOLERANCE UNLESS OTHERWISE SPECIFIED

VOLUME 100 CUBIC INCHES	INCH PLUS OR MINUS		VOLUME 1000 CUBIC CM	METRIC PLUS OR MINUS	
UNDER	.XX	.XX (.X DECIMAL)	.X (.XX DECIMAL)	OVER	.XX (.X DECIMAL)
0	8	.03	.005	0	150	.8	.127
8	24	.04	.008	150	600	1.0	.203
24	-	.06	.010	-	600	1.5	.254

UNLESS OTHERWISE SPECIFIED ALL MACHINED SURFACES WILL HAVE A SURFACE FINISH OF 125 MICROINCHES ANGULAR TOLERANCE OF +-.50 CONCENTRICITY WITHIN .010

THIRD ANGLE PROJECTION

UNLESS OTHERWISE SPECIFIED ALL WELDS SHOULD ADHERE TO THE LATEST HTT WELDING SPECIFICATION 100

CHANGE	R/L	REVISION		DATE
13116.34	A	RELEASE		7-12-05
13116.50	B	ADDED IT-36	PJG/JOC	9-2-05
13116.57	C	REPLACED IT-36, ADDED NOTE.	PJG/JOC	10-05-05

Description: SEAT ASSEMBLY
Drawing Number: ----------
Machine Type:
Model: 4009667.asm
Weight: ----------
Scale: 1:4
Drawn: rpburner 7-12-05
APVD Dwg: AML APVD Dtlg: AML
Mat'l:

HTT
Harsco Track Technologies
Harsco
Columbia, SC

Part Number: 4009667
Size: D
Sheet: 2 of 2

Plotted by pgleaton on 1/19/2006 4009667.dft

ENG.DWG.NO.
C5363WAK

REVISIONS						
NO	ER	DESCRIPTION	ZONE	DR	CK	APP
1	12346 .97	NEW RELEASE		EP		
2	12346 .98	REVISED NOTES. WHITE WIRE ON SWITCH WIRING WAS BLUE.		EP	HW	WG
3	12346 .242	ADDED BLUE WIRE TO PIN #3 DELETED NOTE 2		W.G.	EP	WG
D	12498 .63	ITEM 3 WAS 0-3250001-0-02. REVISED NOTE 2.		EP	WG	WG
E	12490.31	DELETE NOTE 2.		EP	WG	WG

FOOT SWITCH

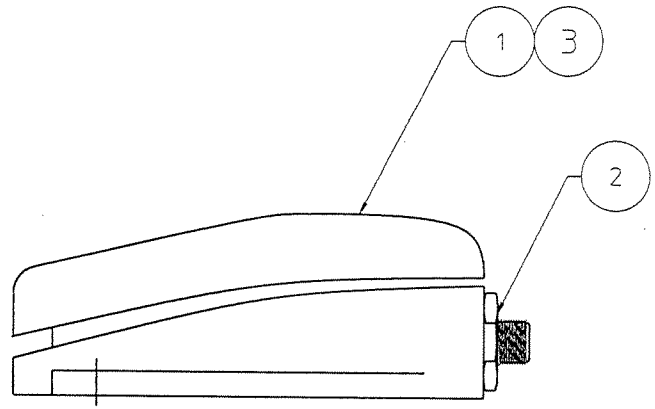

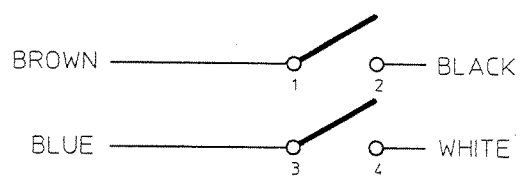

SWITCH WIRING

NOTES:
1) REMOVE CONNECTOR FROM FOOT SWITCH AND DISCARD. BEFORE INSTALLING ITEM 2.

~~2) INSULATE END OF BLUE WIRE AND FOLD BACK.~~

3) USE BLUE LOCTITE, P/N 0-3040000-0-06, ON ITEM 2 WHEN INSTALLING IN FOOT SWITCH.

FIG NO.	ITEM NO.	PART NUMBER	DESCRIPTION AND MATERIAL SIZE (REF.ONLY)	QT
	3	0-3250001-0-74	TERMINAL LUG	4
	2	185639	RECEPTACLE, 4 PIN	1
	1	0-3115000-0-02	FOOTSWITCH	1

IMPLIED TOLERANCES
ALL DIMENSIONS ARE IN INCHES-TOLERANCE UNLESS OTHERWISE SPECIFIED

NOMINAL SIZE RANGE OVER	TO	PLUS OR MINUS FRACTION	2 PLACE DECIMAL	3 PLACE DECIMAL	NOMINAL SIZE RANGE OVER	TO	PLUS OR MINUS FRACTION	2 PLACE DECIMAL	3 PLACE DECIMAL
-	1	1/64	.01	.003	6	24	3/64	.03	.008
1	6	1/32	.02	.005	24	-	1/16	.05	.010

ANGULAR DIMENSIONS PLUS OR MINUS 1 DEGREE

✓ ALL MACHINED SURFACES TO HAVE A SURFACE FINISH OF 125 MICROINCHES UNLESS OTHERWISE SPECIFIED.

WELDING SPECIFICATION

UNLESS OTHERWISE SPECIFIED ALL WELDS SHOULD ADHERE TO FAIRMONT TAMPER WELDING SPECIFICATION NO. 101

WEIGHT LBS.

3RD ANGLE PROJECTION

DO NOT SCALE

SHEET 1 OF —

DESCRIPTION OF: FOOTSWITCH, M12 CONN

DRAWN EP	DATE 10/19/01	MACHINE TYPE TS-50
CHECKED HW	DATE 10/22/01	
APPROVED WG	DATE 10/22/01	
APPROVED	DATE	
LAST ECR 12490 .31	CHECKED BY WG DATE 13-JUL-04	ENGINEER

Fairmont Tamper
2401 Edmund Rosen Blvd
Cayce-West Columbia,
South Carolina 29171-0
(803) 822-9160

ENGINEER C5363WAK

THIS DOCUMENT CONTAINS PROPRIETARY INFORMATION AND SUCH INFORMATION MAY NOT BE DISCLOSED TO OTHERS FOR ANY PURPOSE OR USED FOR MANUFACTURING PURPOSES WITHOUT THE WRITTEN PERMISSION OF FAIRMONT TAMPER

Item Number	Document Number	Title	Quantity
1	4005178	BOTTOM PL / INNER TUBE WLDT	1
2	4005187	SWIVEL PAD	1
3	4005189	TOP BRKT / OUTER TUBE WLDT	1
4	C8643Y01	LOCK HANDLE	1
5	A0056008	1/2-13 JAM NUT	4
6	A0062038	SOC HD SET SCR 1/2-13 X 1	4
7	G1904Y01	BRONZE INSERT	4
8	A0064055	SHOLDER BOLT 3/8 x 3/8 NYLOK	1

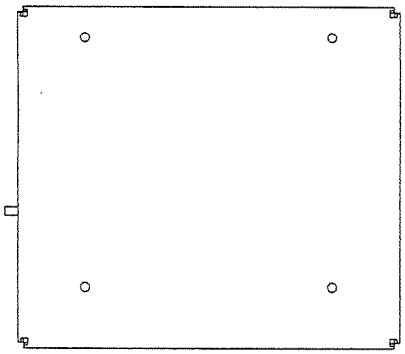

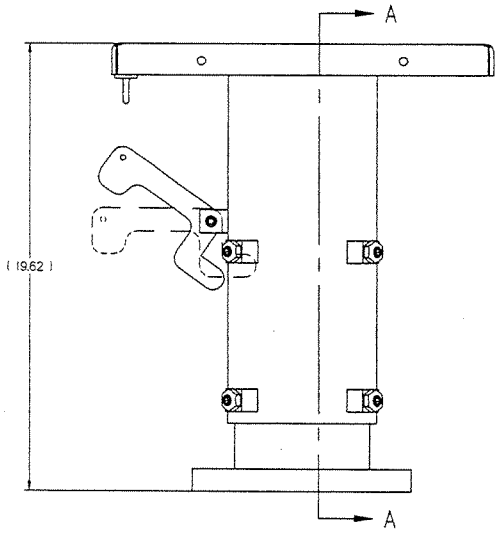

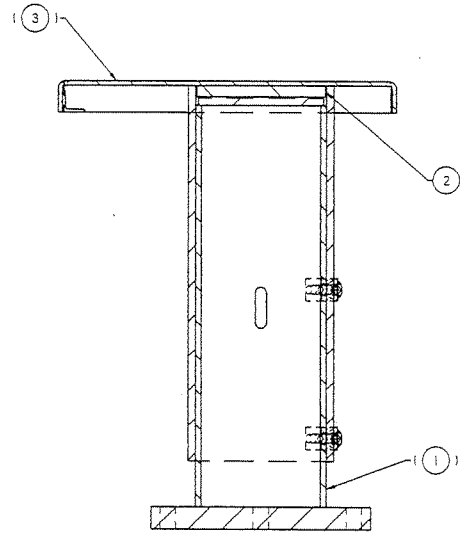

SECTION A-A

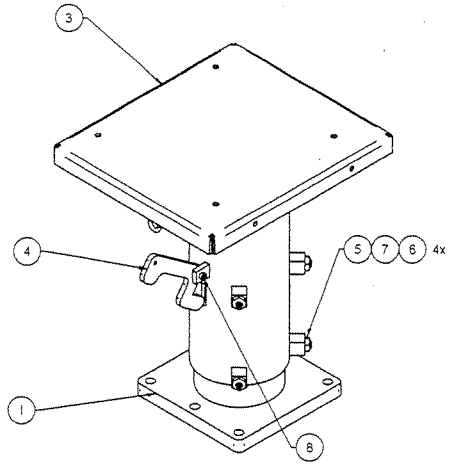

CONFIDENTIAL
© COPYRIGHT 2001 HARSCO TRACK TECHNOLOGIES. THIS DRAWING OR DOCUMENT IS THE PROPERTY OF HARSCO TRACK TECHNOLOGIES AND EMBODIES CONFIDENTIAL INFORMATION, TRADE SECRET INFORMATION, AND/OR KNOWHOW THAT IS THE PROPERTY OF HARSCO TRACK TECHNOLOGIES. BY ACCEPTING THIS DRAWING OR DOCUMENT, THE RECIPIENT AGREES (1) NOT TO PROVIDE, OR OTHERWISE MAKE AVAILABLE, THE DRAWING OR DOCUMENT, OR ANY INFORMATION OR KNOWHOW EMBODIED THEREIN, TO ANY THIRD PARTY, AND (2) NOT TO REPRODUCE OR USE THE DRAWING OR DOCUMENT TO MANUFACTURE ANY APPARATUS OR DEVICE, WITHOUT THE PRIOR WRITTEN AUTHORIZATION OF HARSCO TRACK TECHNOLOGIES.

SOLID EDGE DRAWING

IMPLIED TOLERANCES
ALL DIMENSIONS ARE IN INCHES - TOLERANCE UNLESS OTHERWISE SPECIFIED

	INCH				MM			
	PLUS OR MINUS				PLUS OR MINUS			
DECIMAL PLACES	1	2	3	4	1	2	3	4
ANGLE	30'	15'	5'	1'	0.5	0.25	0.10	0.05
	0	0	0.3	.005	0	1.50	0	1.51
	0	1.1	0.1	.005	1.27	.005	1.0	.127
	1.1	-	.06	0.12	-	.005	1.1	.127

THIRD ANGLE PROJECTION

CHANGE	RA	REVISION	DATE
13039.59	-	RELEASE	4-5-04

Description: SEAT STAND
Drawing Number: 4004899.asm
Model: 4004899.asm
Weight: 99.673 lbm
Scale: 1:4
Assembly Type: CTA MK VI
Drawn: rgurner 4-5-04
Checked: AML
Date Released: 4-5-04
Approved: AML

HTT
Harsco Track Technologies
Harsco
Columbia, SC

Part Number: 4004899
Rev: D
Sheet: 1 of 1

Plotted by hwiggins on 1/19/2006 4004899.dft

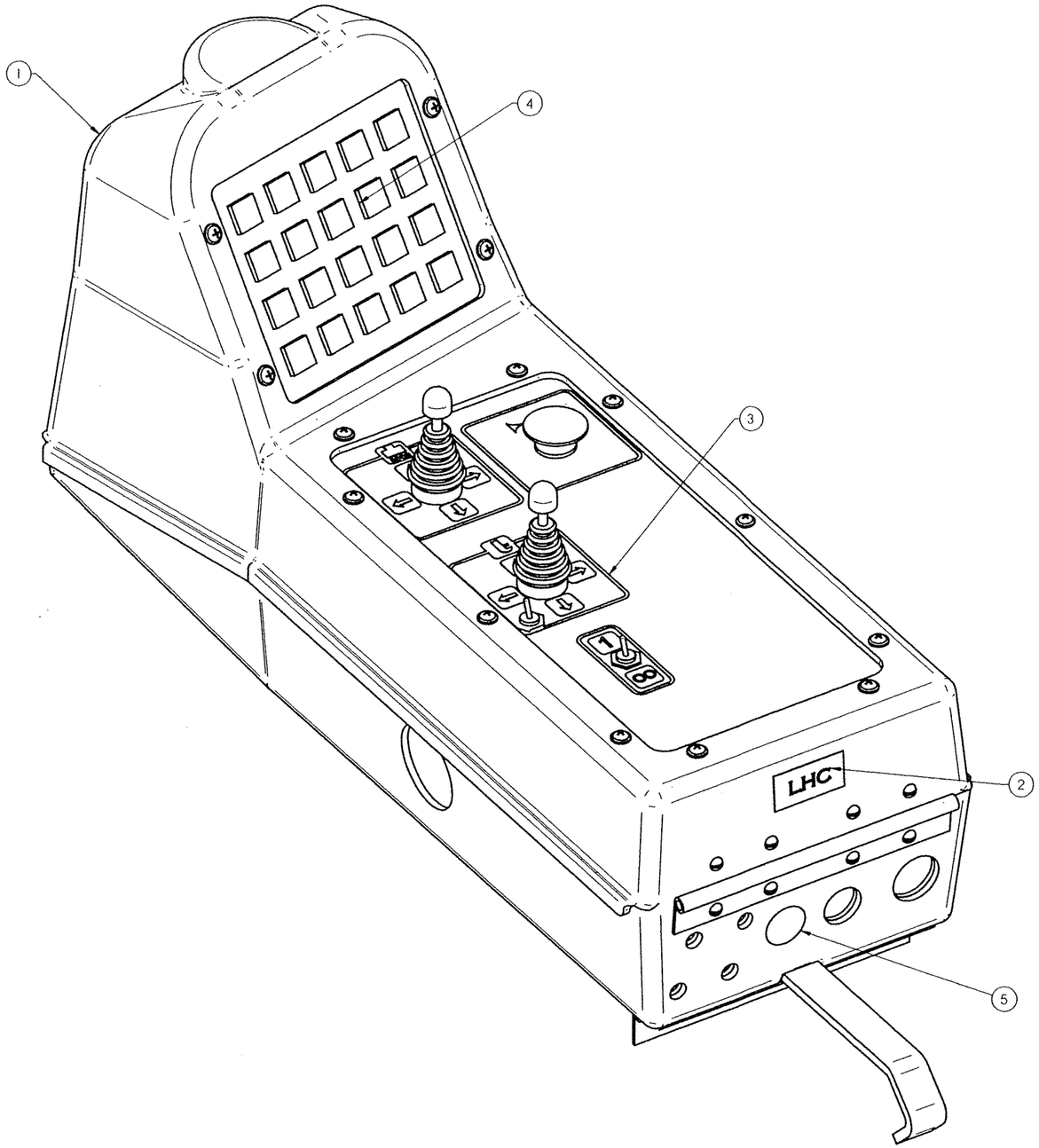

Item Number	Document Number	Title	Quantity
1	D6045WAD	L/H CONSOLE BOX	1
2	D2892Y08	NAMEPLATE, LHC	1
3	H1698WAF	L/H NAMEPLATE ASSEMBLY	1
4	H1825WAC	LEFT KEYPAD ASSEMBLY	1
5	0-3274003-0-04	.875 DIA HOLE PLUG	1
8	L40177	CHAIN UTILITY	1
9	L424219	1/2" SLEEVING	1
10	B5532Y05	10-32 X 5/8 BLK W/WASH	14
11	A0055007	10-32 PLATED HEX NUT	16
12	A0061006	WASHER, #10, LOCK WASHER	16
13	A0059025	10 MEDIUM PLTD FL WASH	14
14	B5532Y09	1/4-20 X 1 BLK W/ WASH	2
15	A0059028	1/4 MEDIUM FLAT WASHER	2
16	A0061008	1/4 MEDIUM LOCK WASHER	2
17	A0055009	1/4-20 HEX NUT	2
18	A0050055	10-24 X 5/8 PL RD HD MS	2
19	A0060006	10 SAE FLAT WASHER PLATED	2
20	B0970Y05	END CLAMP	2
21	B0971T05	8.24 in DIN RAIL	1
24	A9297Y03	16 AWG COPPER WIRE	3
25	A9297Y02	18 AWG COPPER WIRE	10
27	B0970Y07	MARKING STRIP	22
28	B0970Y01	4 PLACE TERMINAL BLOCK	22
29	B0970Y02	END PLATE	1

CONFIDENTIAL
© COPYRIGHT 2001 HARSCO TRACK TECHNOLOGIES. THIS DRAWING OR DOCUMENT IS THE PROPERTY OF HARSCO TRACK TECHNOLOGIES AND EMBODIES CONFIDENTIAL INFORMATION, TRADE SECRET INFORMATION, AND/OR KNOW-HOW THAT IS THE PROPERTY OF HARSCO TRACK TECHNOLOGIES. BY ACCEPTING THIS DRAWING OR DOCUMENT, THE RECIPIENT AGREES (1) NOT TO PROVIDE, OR OTHERWISE MAKE AVAILABLE, THE DRAWING OR DOCUMENT, OR ANY INFORMATION OR KNOW-HOW EMBODIED THEREIN, TO ANY THIRD PARTY AND (2) NOT TO REPRODUCE OR USE THE DRAWING OR DOCUMENT TO MANUFACTURE ANY APPARATUS OR DEVICE, WITHOUT THE PRIOR WRITTEN AUTHORIZATION OF HARSCO TRACK TECHNOLOGIES.

SOLID EDGE DRAWING

IMPLIED TOLERANCES
ALL DIMENSIONS ARE IN INCHES - TOLERANCE UNLESS OTHERWISE SPECIFIED

NOMINAL A.P. DIAMETER	INCH PLUS OR MINUS		METRIC PLUS OR MINUS	
GAUGE	10	FRACTIONAL	DECIMAL	FRACTIONAL	DECIMAL
0	6	.03	.005	0	±50	.8	.127
8	2*	.04	.008	150	800	1.0	.203
24	-	.06	.010	-	600	1.5	.254

UNLESS OTHERWISE SPECIFIED ALL MACHINED SURFACES WILL HAVE A SURFACE FINISH OF 125 MICROINCHES ANGULAR TOLERANCE OF ± .50° CONCENTRICITY WITHIN .010

THIRD ANGLE PROJECTION

UNLESS OTHERWISE SPECIFIED ALL WELDS SHOULD ADHERE TO THE LATEST HTT WELDING SPECIFICATION 101

CHANGE	R/L	REVISION	DATE
13116.44	A	RELEASE	8-20-05
100153	B	DEL. IT.22-A0653Y01, IT.26-0-3111006-0-25, IT.31-A0655Y25	12-19-05

Description: L/H ARM CONSOLE ASSEMBLY
Drawing Number: ————
Machine Type:
Model: H7278WAA.asm
Drawn: rpturner 8-20-05
Weight: ————
Scale: 1:4
APVD Dwg: WG APVD Eng: WG
Mat'l:

HTT
Harsco Track Technologies
Harsco
Columbia, SC

Part Number: H7278WAA
Size: D
Sheet: 1 of 3

Plotted by rpturner on 1/20/2006 H7278WAA.dft

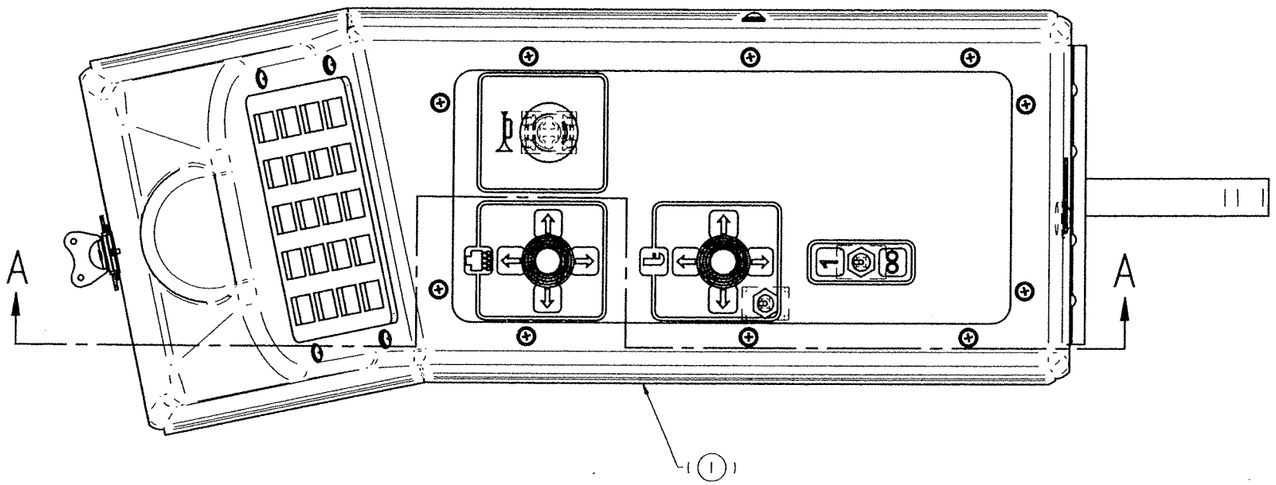

NOTE:

2-A INSTALL KEYPAD, IT-4. ALL BUTTOMS MUST MOVE FREELY AFTER INSTALLATION

2-B WIRING DIAGRAM H7279W01.

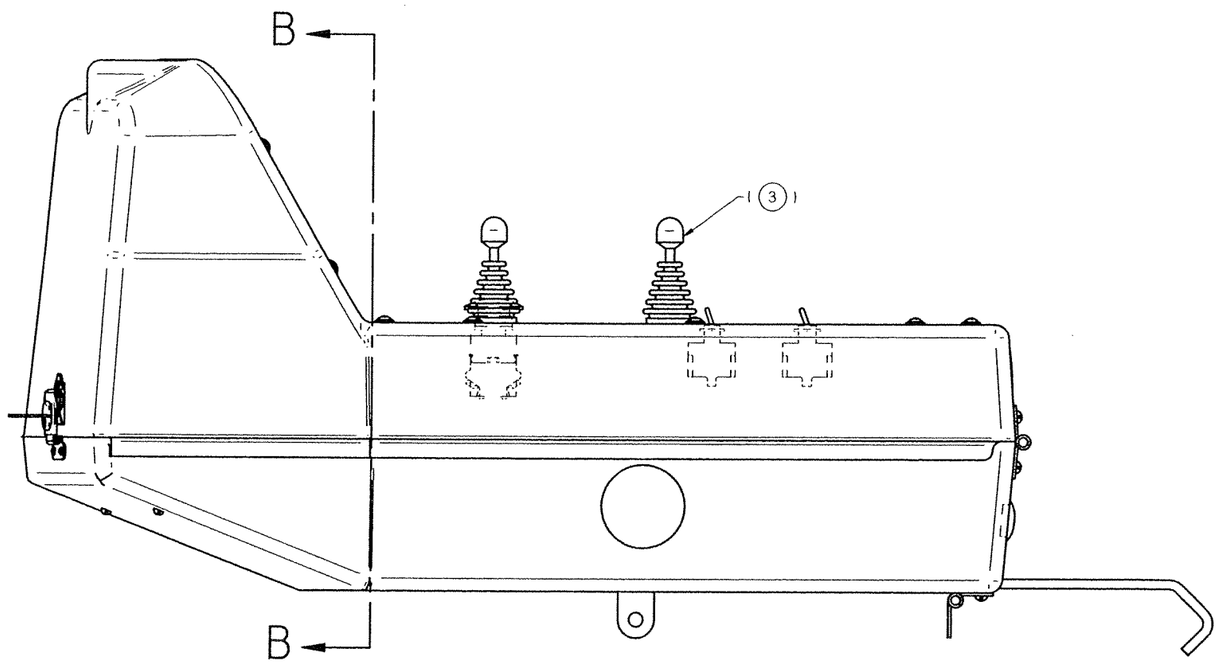

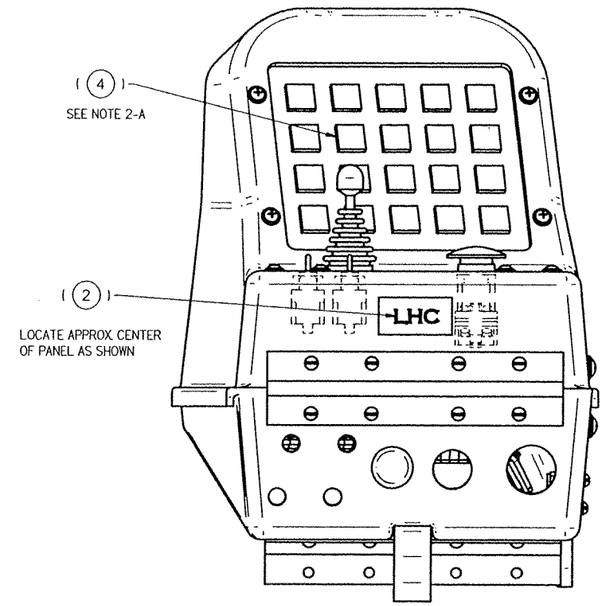

SOLID EDGE DRAWING

CONFIDENTIAL
© COPYRIGHT 2001 HARSCO TRACK TECHNOLOGIES. THIS DRAWING OR DOCUMENT IS THE PROPERTY OF HARSCO TRACK TECHNOLOGIES AND EMBODIES CONFIDENTIAL INFORMATION, TRADE SECRET INFORMATION, AND/OR KNOW-HOW THAT IS THE PROPERTY OF HARSCO TRACK TECHNOLOGIES. BY ACCEPTING THIS DRAWING OR DOCUMENT, THE RECIPIENT AGREES (1) NOT TO PROVIDE, OR OTHERWISE MAKE AVAILABLE, THE DRAWING OR DOCUMENT, OR ANY INFORMATION OR KNOW-HOW EMBODIED THEREIN, TO ANY THIRD PARTY AND (2) NOT TO REPRODUCE OR USE THE DRAWING OR DOCUMENT TO MANUFACTURE ANY APPARATUS OR DEVICE, WITHOUT THE PRIOR WRITTEN AUTHORIZATION OF HARSCO TRACK TECHNOLOGIES.

IMPLIED TOLERANCES
ALL DIMENSIONS ARE IN INCHES - TOLERANCE UNLESS OTHERWISE SPECIFIED

NOMINAL HOLE SIZE (MIN)	TO	INCH PLUS OR MINUS (STANDARD)	INCH PLUS OR MINUS (DECIMAL)	NOMINAL HOLE SIZE (MM)	TO	METRIC PLUS OR MINUS (STANDARD)	METRIC PLUS OR MINUS (DECIMAL)
0	8	.03	.005	0	150	.8	.127
8	24	.04	.008	150	600	1.0	.203
24	-	.06	.010	-	600	1.5	.254

UNLESS OTHERWISE SPECIFIED ALL MACHINED SURFACES WILL HAVE A SURFACE FINISH OF 125 MICROINCHES AVERAGE TOLERANCE OF ± .50" CONCENTRICITY WITHIN .010

THIRD ANGLE PROJECTION

UNLESS OTHERWISE SPECIFIED ALL WELDS SHOULD ADHERE TO THE LATEST AWS WELDING SPECIFICATION 531

CHANGE	R/L	REVISION	DATE
13116.44	A	RELEASE	8-20-05
100153	B	DEL. IT.22-A0653Y01, IT.26-0-3111006-0-25, IT.31-A0655Y25	12-19-05

Description: L/H ARM CONSOLE ASSEMBLY
Drawing Number:
Model: H7278WAA.asm
Weight:
Mass:
Scale: 1:4
Machine Type:
Drawn: rpturner
Date Drawn: 8-20-05
APVD Eng: WG
APVD Dr'ng: WG

HTT
Harsco Track Technologies
Harsco
Columbia, SC

Part Number: H7278WAA
Size: D
Sheet: 2 of 3

Plotted by rpturner on 1/20/2006 H7278WAA.dft

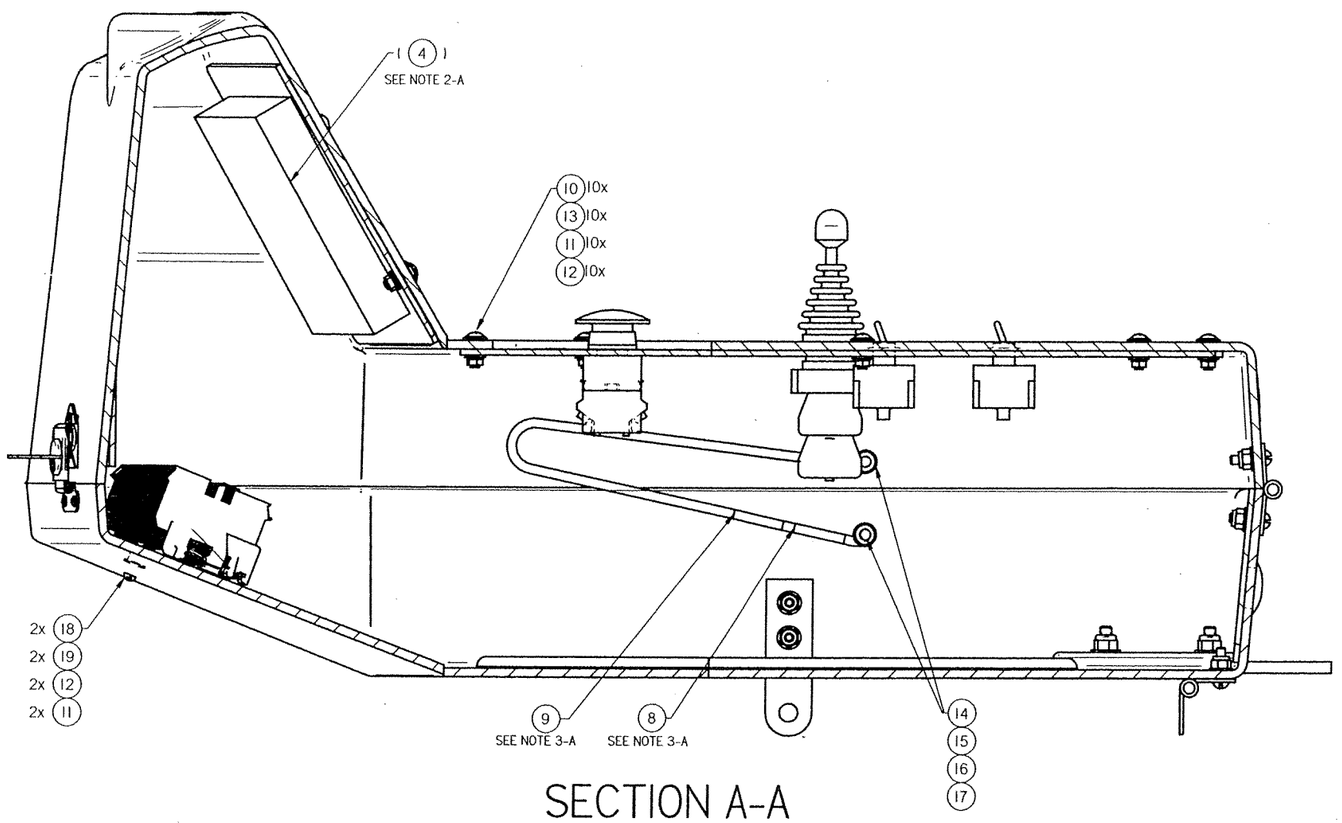

SECTION A-A

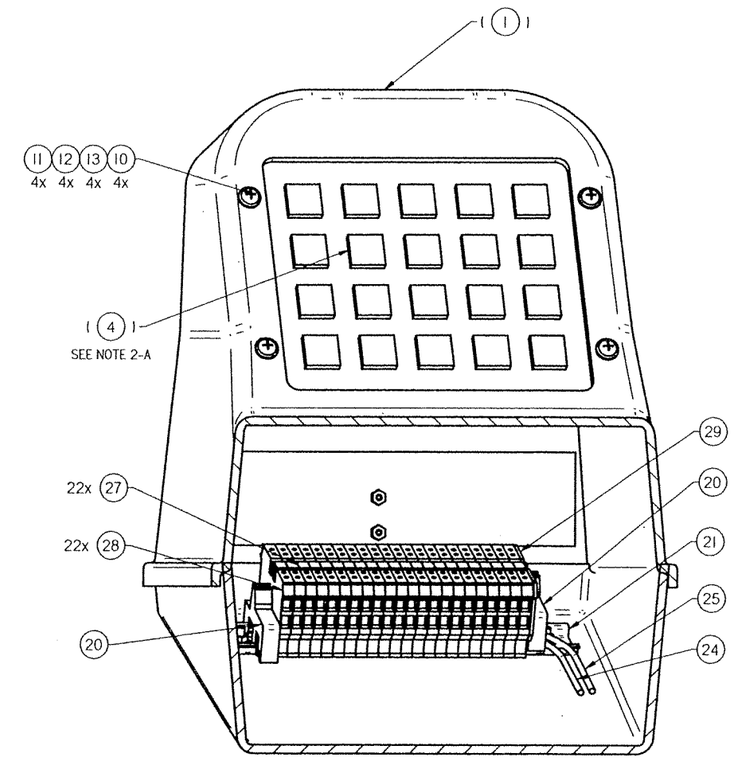

SECTION B-B

NOTE:

3-A CUT ITEM 8 TO 16.5" AND CUT ITEM 9 TO 16"
THEN SECURE CHAIN WITH ITEMS 14, 15, 16, & 17.

CONFIDENTIAL
© COPYRIGHT 2001 HARSCO TRACK TECHNOLOGIES. THIS DRAWING OR DOCUMENT IS THE PROPERTY OF HARSCO TRACK TECHNOLOGIES AND EMBODIES CONFIDENTIAL INFORMATION, TRADE SECRET INFORMATION, AND/OR KNOW-HOW THAT IS THE PROPERTY OF HARSCO TRACK TECHNOLOGIES. BY ACCEPTING THIS DRAWING OR DOCUMENT, THE RECIPIENT AGREES (1) NOT TO PROVIDE, OR OTHERWISE MAKE AVAILABLE, THE DRAWING OR DOCUMENT, OR ANY INFORMATION OR KNOW-HOW EMBODIED THEREIN, TO ANY THIRD PARTY AND (2) NOT TO REPRODUCE OR USE THE DRAWING OR DOCUMENT TO MANUFACTURE ANY APPARATUS OR DEVICE, WITHOUT THE PRIOR WRITTEN AUTHORIZATION OF HARSCO TRACK TECHNOLOGIES.

SOLID EDGE DRAWING

IMPLIED TOLERANCES
ALL DIMENSIONS ARE IN INCHES - TOLERANCE UNLESS OTHERWISE SPECIFIED

INCH				METRIC			
DECIMAL PLACES		PLUS OR MINUS		DECIMAL PLACES		PLUS OR MINUS	
OVER	TO	2 PLACE DECIMAL	3 PLACE DECIMAL	OVER	TO	2 PLACE DECIMAL	3 PLACE DECIMAL
0	6	.03	.005	0	150	.8	.127
6	24	.04	.008	150	600	1.0	.203
24	-	.06	.010	-	600	1.5	.254

UNLESS OTHERWISE APPLIED ALL MACHINED SURFACES WILL HAVE A SURFACE FINISH OF 125 MICROINCHES ANGULAR TOLERANCE OF ± .50 CONCENTRICITY WITHIN .010

THIRD ANGLE PROJECTION

UNLESS OTHERWISE SPECIFIED ALL WELDS SHOULD ADHERE TO THE LATEST AWS WELDING SPECIFICATION 101

CHANGE	RA	REVISION	DATE
13116.44	A	RELEASE	8-20-05
100153	B	DEL. IT.22-A0653Y01, IT.26-0-3111006-0-25, IT.31-A0655Y25	12-19-05

Description: L/H ARM CONSOLE ASSEMBLY
Drawing Number: ----------
Machine Type:
Model: H7278WAA.asm
Weight: ----------
Scale: 1:4
Drawn: rplurner
Date Drawn: 8-20-05
APVD Mag: WG
APVD CHEK: WG
Mat'l:

HTT
Harsco Track Technologies
Harsco
Columbia, SC

Part Number: H7278WAA
Size: D
Sheet: 3 of 3

Plotted by rplurner on 1/20/2006 H7278WAA.dft

ENG.DWG.NO.
H7279W01

REVISIONS							
NO	ER	DESCRIPTION	ZONE	DR	CK	APP	MF
A	13116 .49	NEW RELEASE		EP			
B	13116 .57	REMOVED BLOCK, 0115, FROM TS1. DEL SPRING BRAKE BLOW DOWN VALVE & ITS REF TO TS1, 000.		PJG	JOC	JOC	

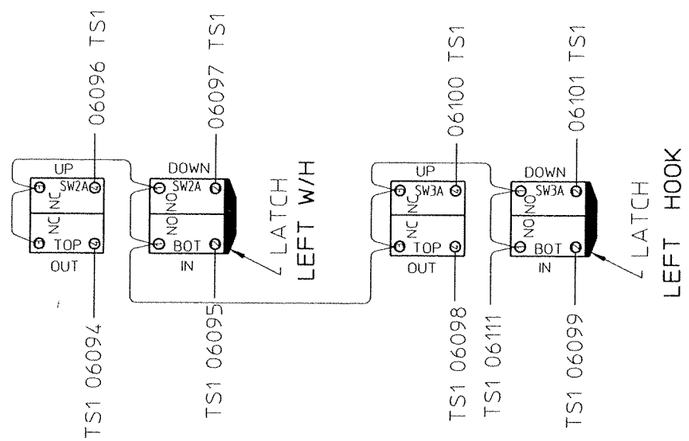

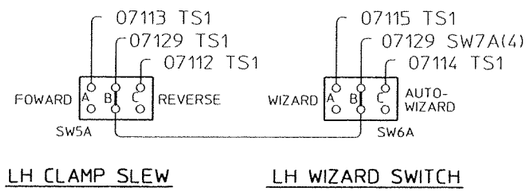

LH CLAMP SLEW

LH WIZARD SWITCH

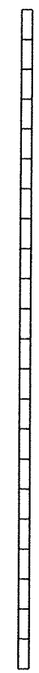

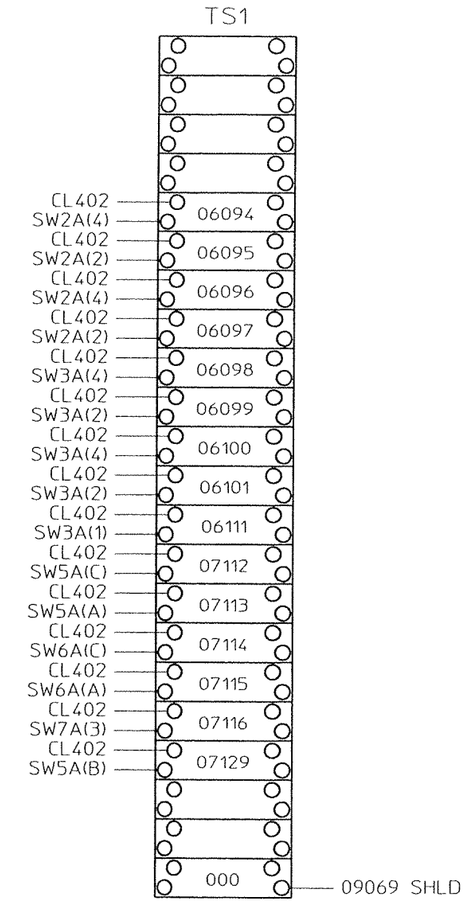

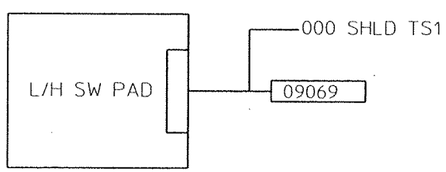

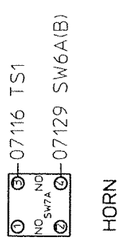

NOTES:

1. ALL WIRES TO BE #18 AWG UNLESS OTHERWISE INDICATED.
2. WIRING FOR H7278WAA.

THIS DOCUMENT CONTAINS PROPRIETARY INFORMATION AND SUCH INFORMATION MAY NOT BE DISCLOSED TO OTHERS FOR ANY PURPOSE OR USED FOR MANUFACTURING PURPOSES WITHOUT THE WRITTEN PERMISSION OF FAIRMONT TAMPER.

FOR REFERENCE ONLY

DESCRIPTION (30): LH ARM CONSOLE WIRING

DRAWN EP	DATE 8/31/05	MACHINE TYPE MK VI IRAQ 2005
CHECKED WG	DATE 9/7/05	Fairmont Tamper
APP-ENG WG	DATE 9/7/05	2401 Edmund Road-Box 20 Cayce-West Columbia, South Carolina 29171-0020 (803) 822-9160
SHEET 1	CONT. ON —	
LAST ECR 13116 .57	CHECKED dvan DATE 14-Oct-05	ENG.DWG.NO. H7279W01

ENG.DWG.NO.
H1698WAF

REVISIONS							
NO	ER	DESCRIPTION	ZONE	DR	CK	APP
A	130736	NEW RELEASE		EP		

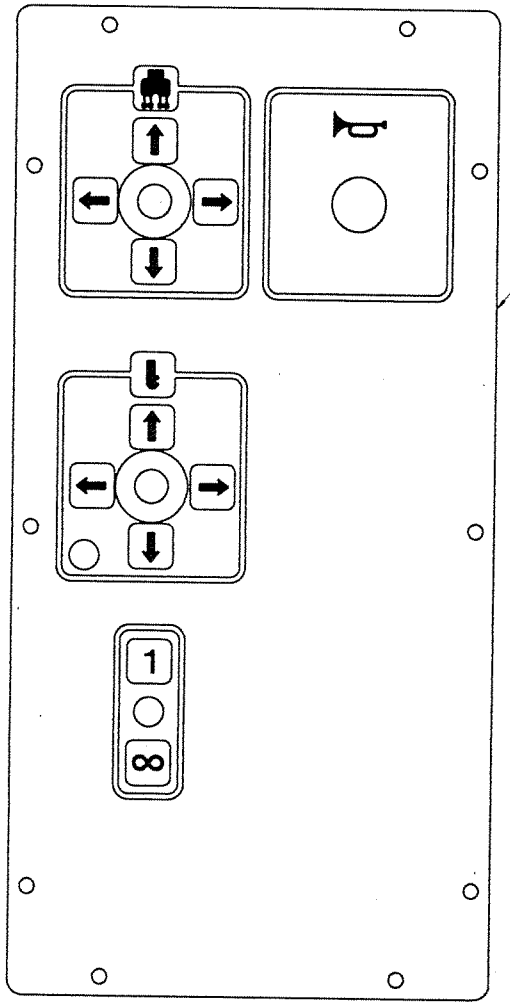

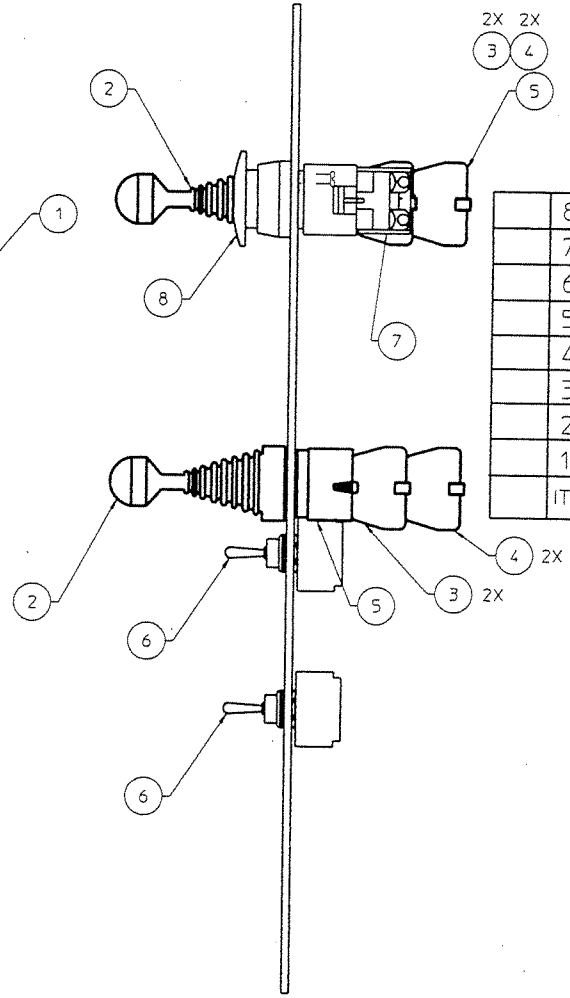

	ITEM	PART NUMBER	DESCRIPTION	QTY
	8	A0655Y25	SWITCH, MOM, MUSHROOM	1
	7	A0653Y01	CONTACT BLOCK (NO NO)	1
	6	0-3111006-0-25	TOGGLE SW. MOM, CEN, OFF	2
	5	B1348Y06	JOYSTICK LATCH	2
	4	B1348Y03	CONTACT BLOCK, NC	4
	3	B1348Y02	CONTACT BLOCK, NO	4
	2	B1348Y01	JOYSTICK	2
	1	H1694W06	LH CONSOLE NAMEPLATE	1

FIG NO.	ITEM NO.	PART NUMBER	DESCRIPTION AND MATERIAL SIZE (REF.ONLY)	QT
			DESCRIPTION 1&2 LH NAMEPLATE ASSEMBLY	

ER 2/09/04
WQ 2/09/04
WELDING SPECIFICATION 2/09/04

IMPLIED TOLERANCES
ALL DIMENSIONS ARE IN INCHES-TOLERANCE UNLESS OTHERWISE SPECIFIED

NOMINAL SIZE RANGE		PLUS OR MINUS			NOMINAL SIZE RANGE		PLUS OR MINUS		
OVER	TO	FRACTION	2 PLACE DECIMAL	3 PLACE DECIMAL	OVER	TO	FRACTION	2 PLACE DECIMAL	3 PLACE DECIMAL
-	1	1/64	.01	.003	6	24	3/64	.03	.008
1	6	1/32	.02	.005	24	-	1/16	.05	.010

ANGULAR DIMENSIONS PLUS OR MINUS 1 DEGREE
ALL MACHINED SURFACES TO HAVE A SURFACE FINISH OF 125 MICROINCHES UNLESS OTHERWISE SPECIFIED.

UNLESS OTHERWISE SPECIFIED ALL WELDS SHOULD ADHERE TO FAIRMONT TAMPER WELDING SPECIFICATION NO. 101

WEIGHT
SCA.
3rd ANGLE PROJECTION
DO NOT SCALE
SHEET 1 CONT. – OF –

DRAWN DATE
CHECKED DATE
ENGINEERING DATE
APPROVED DATE
MFG. ENG. 13073 .6
CHECKED DATE 16-JUL-04
ENGINEER

MACHINE TYPE
MARK VI

Fairmont Tamper
2401 Edmund Road
Cayce-West Columbia
South Carolina 29171
(803) 822-9160

H1698WAF

THIS DOCUMENT CONTAINS PROPRIETARY INFORMATION AND SUCH INFORMATION MAY NOT BE DISCLOSED TO OTHERS FOR ANY PURPOSE, OR USED FOR MANUFACTURING PURPOSES WITHOUT THE WRITTEN PERMISSION OF FAIRMONT TAMPER

ENG.DWG.NO.
H1825WAC

REVISIONS						
NO	ER	DESCRIPTION	ZONE	DR	CK	APP
1	12509 .79	NEW RELEASE		JFB		
2	12509 .68	ADDED IT.19, 20, 21 TO PARTS LIST		JFB	DGV	WG
3	12509 .	IT-9 WAS H1828Y04		PJG	JOC	JOC

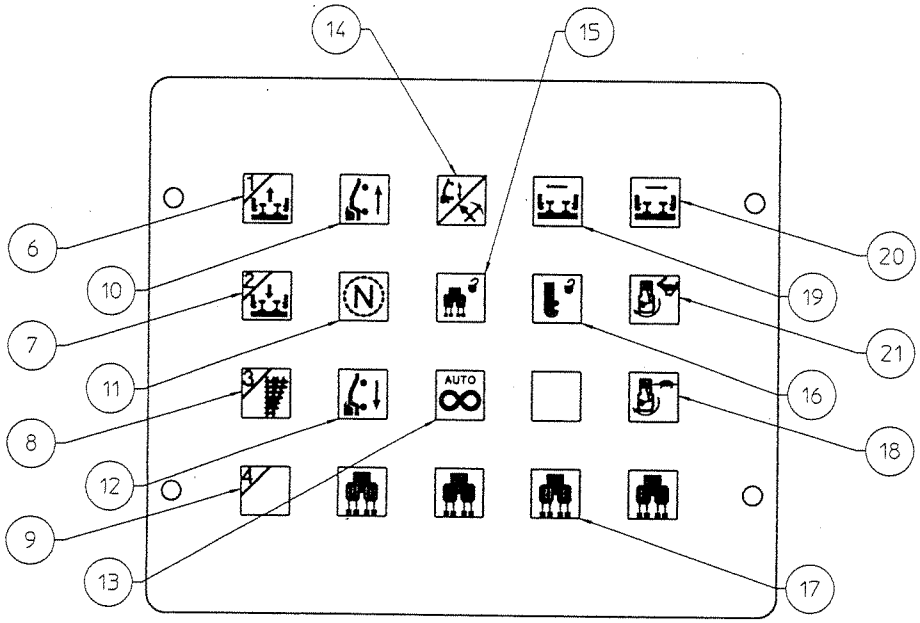

ITEM	PART NUMBER	DESCRIPTION	QTY
21	H1828Y16	FILM INSERT, REV UP	1
20	H1828Y15	FILM INSERT, LINE RIGHT	1
19	H1828Y14	FILM INSERT, LINE LEFT	1
18	H1828Y17	FILM INSERT, REV DOWN	1
17	B1443W15	FILM INSERT, WORKHEAD	4
16	H1828Y11	FILM INSERT, CLAMP LOCK	1
15	H1828Y10	FILM INSERT, W/H LOCK	1
14	H1828Y09	FILM INSERT, WORK/TRAVEL	1
13	H1828Y08	FILM INSERT, AUTOMATIC	1
12	H1828Y07	FILM INSERT, REV TRAVEL	1
11	H1828Y06	FILM INSERT, NEUTRAL	1
10	H1828Y05	FILM INSERT, FWD TRAVEL	1
9	H1828Y44	FILM INSERT, TRVL GEAR 4	1
8	H1828Y03	FILM INSERT, SWITCH 3	1
7	H1828Y02	FILM INSERT, A/J OFF 2	1
6	H1828Y01	FILM INSERT, A/J ON 1	1
5	A0061004	6 LOCK WASHER	16
4	A0050019	6-32x7/8 SCREW	16
3	B1577Y04	NYLON SPACER	16
2	B0943WAB	RH SWITCH PAD ASSY	1
1	H1827W01	KEYPAD NAMEPLATE	1

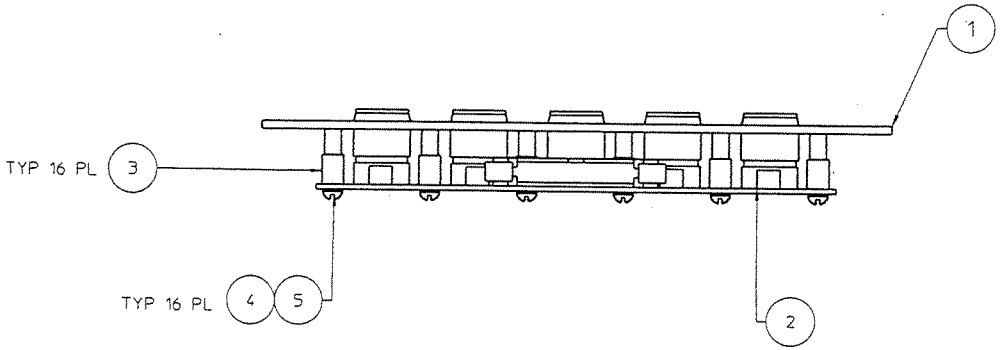

NOTES:

1. ALL BUTTONS MUST MOVE FREELY
2. ITEMS 6 THRU 21: INSTALL ACCORDING TO PICTORAL REPRESENTATION

FIG NO.	ITEM NO.	PART NUMBER	DESCRIPTION AND MATERIAL SIZE (REF.ONLY)

IMPLIED TOLERANCES
ALL DIMENSIONS ARE IN INCHES-TOLERANCE UNLESS OTHERWISE SPECIFIED

NOMINAL SIZE RANGE OVER	TO	PLUS OR MINUS FRACTION	2 PLACE DECIMAL	3 PLACE DECIMAL	NOMINAL SIZE RANGE OVER	TO	PLUS OR MINUS FRACTION	2 PLACE DECIMAL	3 PLACE DECIMAL
-	1	1/64	.01	.003	6	24	3/64	.03	.008
1	6	1/32	.02	.005	24	-	1/16	.05	.010

ANGULAR DIMENSIONS PLUS OR MINUS 1 DEGREE
ALL MACHINED SURFACES TO HAVE A SURFACE FINISH OF 125 MICROINCHES UNLESS OTHERWISE SPECIFIED.

WELDING SPECIFICATION
UNLESS OTHERWISE SPECIFIED ALL WELDS SHOULD ADHERE TO FAIRMONT TAMPER WELDING SPECIFICATION NO. 101

WEIGHT
DO NOT SCALE
THIRD ANGLE PROJECTION
SHEET 1 CONT. ON

DESCRIPTION OF: LEFT KEYPAD ASSEMBLY

DRAWN	DATE	MACHINE TYPE
JFB	6/7/02	MKIV JUPITER 200
CHECKED DGV	DATE 6/11/02	
APPROVED WG	DATE 6/11/02	
APPROVED	DATE	
LAST ECN 12509 .104	CHECKED DGVDO DATE 17-Sep-02	ENGINEERING H1825WAC

Fairmont Tamper
3145 Edmund Avenue
Greenville, South Carolina 29611
(803) 832-9960

THIS DOCUMENT CONTAINS PROPRIETARY INFORMATION AND SUCH INFORMATION MAY NOT BE DISCLOSED TO OTHERS FOR ANY PURPOSE OR USED FOR MANUFACTURING PURPOSES WITHOUT THE WRITTEN PERMISSION OF FAIRMONT TAMPER

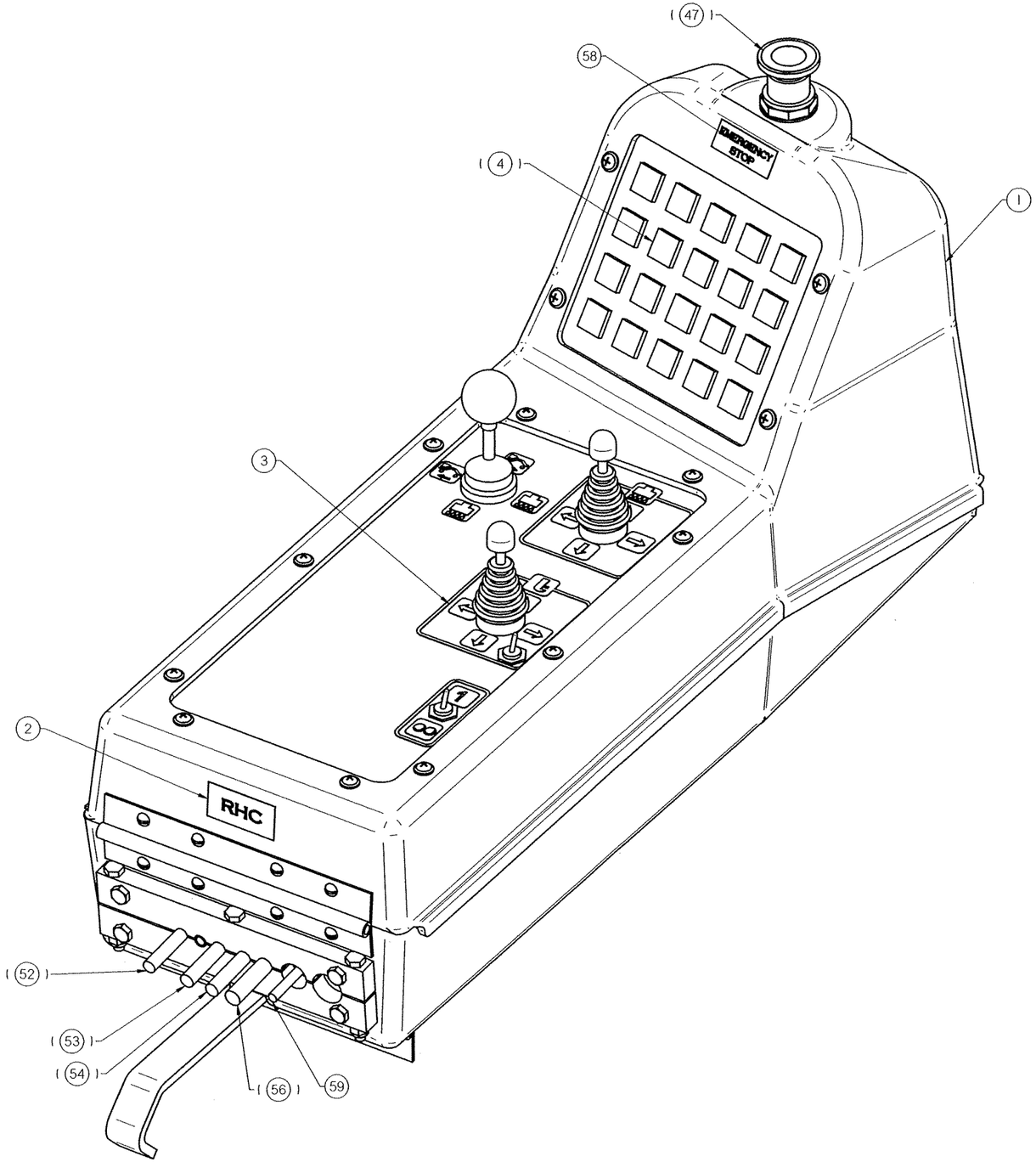

Item Number	Document Number	Title	Quantity
1	D6049WAD	R/H CONSOLE BOX	1
2	D2892Y09	NAMEPLATE, RHC	1
3	H5088WAA	R/H NAMEPLATE ASSY	1
4	H1826WAB	RIGHT KEYPAD ASSEMBLY	1
5	0-3111006-0-25	TOGGLE SW, MOM, CEN, OFF	2
6	L421302	1 IN ST STRAIN RELIEF	2
8	L40177	CHAIN UTILITY	1.5
9	L424219	1/2" SLEEVING	1.5
10	B5532Y05	10-32 X 5/8 BLK W/WASH	14
11	A0055007	10-32 PLATED HEX NUT	16
12	A0061006	WASHER, #10, LOCK WASHER	16
13	A0059025	10 MEDIUM PLTD FL WASH	14
14	B5532Y09	1/4-20 X 1 BLK W/ WASH	2
15	A0059028	1/4 MEDIUM FLAT WASHER	2
16	A0061008	1/4 MEDIUM LOCK WASHER	2
17	A0055009	1/4-20 HEX NUT	2
18	A0050055	10-24 X 5/8 PL RD HD MS	2
19	A0060006	10 SAE FLAT WASHER PLATED	2
20*	B0970Y05	END CLAMP	2
21	B0971T05	8.24 in DIN RAIL	1
22	B0970Y06	CHAIN BRIDGE	2
23	B0970Y02	END PLATE	2
24	B0970Y07	MARKING STRIP	17
25	0-3106007-0-03	WARNING BUZZER	1
26	B0970Y01	4 PLACE TERMINAL BLOCK	17
28	H2967Y01	JUPITER DGTL INPUT PRMG	1
29	H6170XAA	128 INPUT SCANNER ASSY	1
32	401311 6	MOUNTING SPACER	2
33	A0059002	5/16 MEDIUM FLAT WASHER	4
34	A0036037	5/16-18 x 1 3/4" HHCS GR5	2
35	L40388	LOCKNUT, 5/16-18, HEAVY, THIN	2
37	B1577Y14	SPACER #4-40, 1/4 X 5/8	4
38	A0052065	4-40 X 3/8 FL HD MS	4
40	A0051034	4-40 X 3/8 PL PAN HD MS	4
43	H5997Y01	STRAIN RELIEF BLOCK	1

Item Number	Document Number	Title	Quantity
44	H5897XAB	RH KEYPAD CABLE	1
45	A0036011	1/4-20 X 2 1/2 HHCS	3
46	0-3117007-0-01	PUSH PULL OPERATOR (MAINTAINED)	1
47	0-3110006-0-01	LENS BUTTON RED	1
48	L410954	CONTACT BLOCK NC/NC	2
49	L411157	LOCKNUT, 1/4-20, LIGHT	7
50	A0036006	1/4-20 X 1 1/4 HH CPS SCR	4
51*	0-3212004-0-13	CABLE, 18/24 (FT.)	13
52	H5897XAC	LH KEYPAD CABLE	1
53	H6339YAC	NETWORK CABLE, M/F	1
54	H6339YAB	NETWORK CABLE, M/F	1
55	H5750Y13	CL ASSY M12 90 DEG F/PIG 4M	1
56	414273	CABLE ASSY M23-M PIG 10M	1
58	D4486Y38	NP, EMERGENCY STOP	1
59	0-3212004-0-29	CABLE, 18/16 (FT.)	25

CONFIDENTIAL

© COPYRIGHT 2001 HARSCO TRACK TECHNOLOGIES. THIS DRAWING OR DOCUMENT IS THE PROPERTY OF HARSCO TRACK TECHNOLOGIES AND EMBODIES CONFIDENTIAL INFORMATION, TRADE SECRET INFORMATION, AND/OR KNOW-HOW THAT IS THE PROPERTY OF HARSCO TRACK TECHNOLOGIES. BY ACCEPTING THIS DRAWING OR DOCUMENT, THE RECIPIENT AGREES (1) NOT TO PROVIDE, OR OTHERWISE MAKE AVAILABLE, THE DRAWING OR DOCUMENT, OR ANY INFORMATION OR KNOW-HOW EMBODIED THEREIN, TO ANY THIRD PARTY AND (2) NOT TO REPRODUCE OR USE THE DRAWING OR DOCUMENT TO MANUFACTURE ANY APPARATUS OR DEVICE, WITHOUT THE PRIOR WRITTEN AUTHORIZATION OF HARSCO TRACK TECHNOLOGIES.

SOLID EDGE DRAWING

IMPLIED TOLERANCES

ALL DIMENSIONS ARE IN INCHES - TOLERANCE UNLESS OTHERWISE SPECIFIED

NOMINAL SIZE RANGE		INCH PLUS OR MINUS			NOMINAL SIZE RANGE		METRIC PLUS OR MINUS	
OVER	TO	3 PLACE DECIMAL	5 PLACE DECIMAL		OVER	TO	1 PLACE DECIMAL	2 PLACE DECIMAL
0	6	.03	.005		0	150	.8	.127
6	24	.04	.008		150	600	1.0	.203
24	-	.06	.010		-	600	1.5	.254

UNLESS OTHERWISE SPECIFIED ALL MACHINED SURFACES WILL HAVE:
A SURFACE FINISH OF 125 MICROINCHES
ANGULAR TOLERANCE OF ± .50°
CONCENTRICITY WITHIN .010

THIRD ANGLE PROJECTION

UNLESS OTHERWISE SPECIFIED ALL WELDS SHOULD ADHERE TO THE LATEST HTT WELDING SPECIFICATION

CHANGE	R/L	REVISION	DATE
13116.44	A	RELEASE	8-20-05
13116.54	B	DEL IT- 41, P/N WAS L40818; REVISE CL NUMBERS PER CABLE DIAGRM	9-24-05
101152	E	ITEM 51 QTY. WAS 38. ADDED ITEM 59	07-9-07
101201	F	IT-32 WAS A3495T33 CJW/JOC	07-31-07

Description: R/H ARM CONSOLE ASSY

Drawing Number: ----------

Machine Type:

Model: H7280WAA.asm

Weight: ----------

Scale: 1:4

Material:

Drawn: EP 8-20-05

APVD Dwg: WG APVD Chkg: WG

HTT
Harsco Track Technologies
Harsco
Columbia, SC

Part Number: H7280WAA | Size: D | Sheet: 1 of 3

Plotted by cjwolf on 8/14/2007 H7280WAAdft

NOTE:

2-A INSTALL KEYPAD, IT-4. ALL BUTTOMS MUST MOVE FREELY AFTER INSTALLATION

2-B WIRING DIAGRAM H7281W01.
2-C IT-54, H6339YAB INSTALL MALE END TO NETWORK OUT CAN 2.

2-D IT-56, 414273, INSTALL IN RH CONSOLE, CAN 2, FIELD POWER & INSTALL IT-41 ON PIGTAIL END.

2-E INSTALL FEMALE CONN TO NETWORK IN ON CAN 2 WIRE TO TS PER CHART

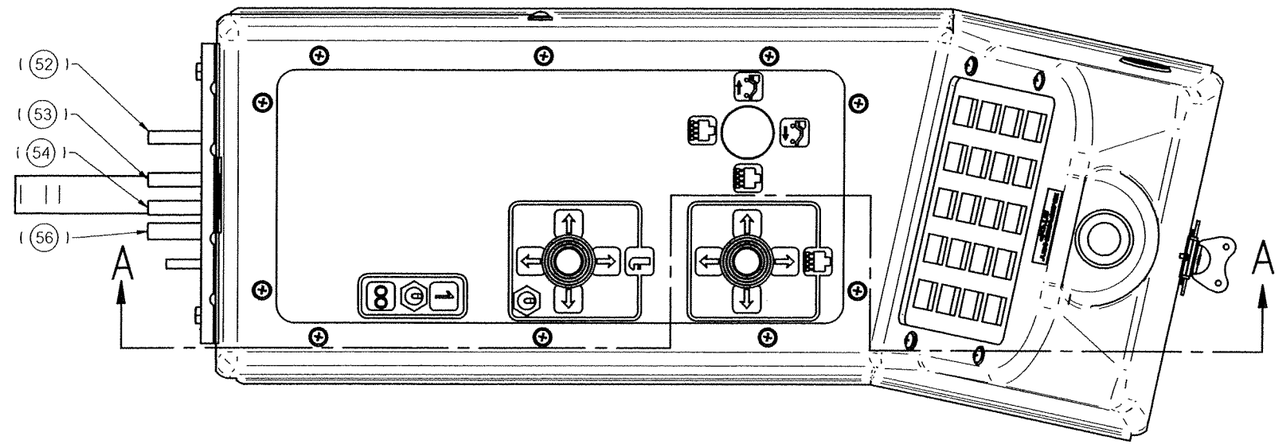

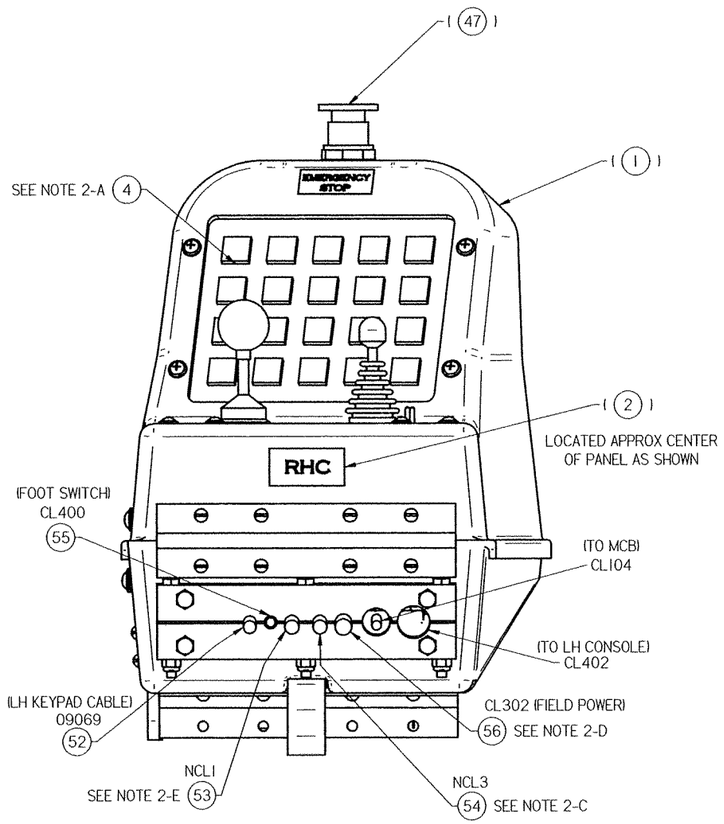

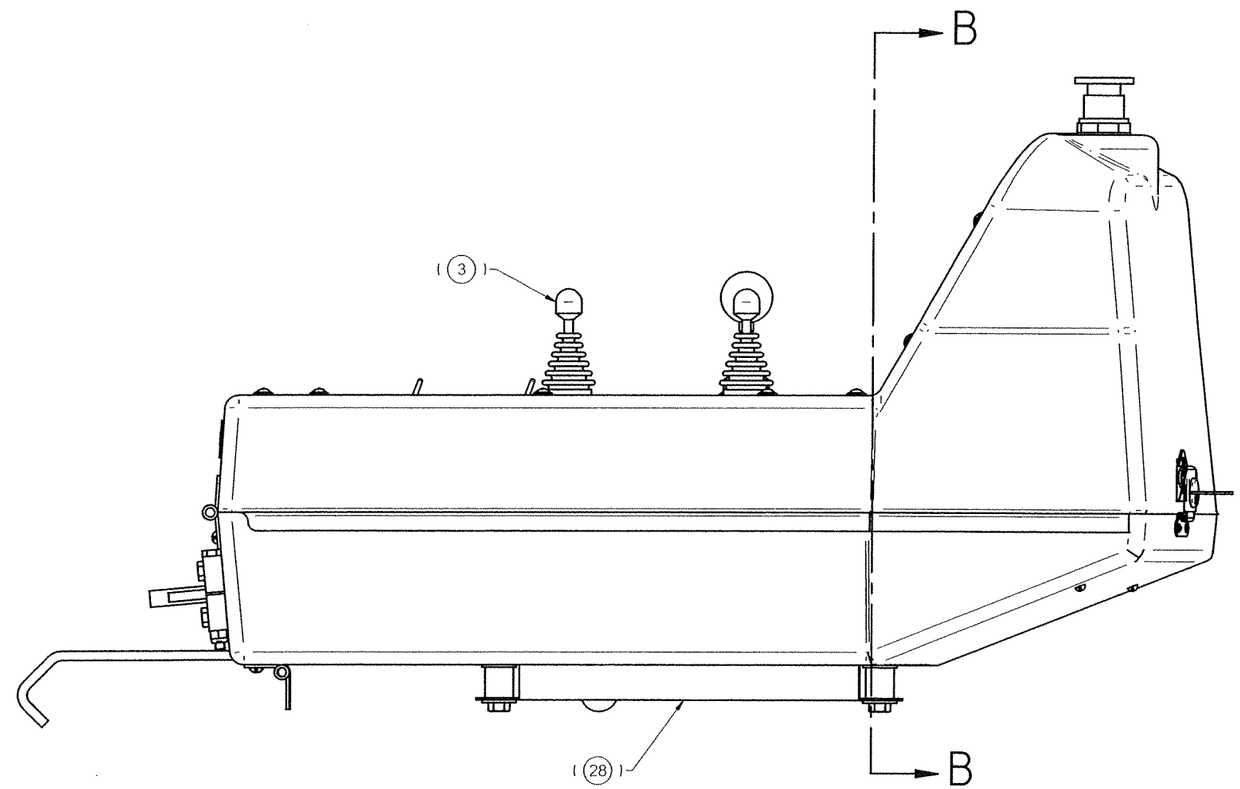

SOLID EDGE DRAWING

CONFIDENTIAL
© COPYRIGHT 2001 HARSCO TRACK TECHNOLOGIES. THIS DRAWING OR DOCUMENT IS THE PROPERTY OF HARSCO TRACK TECHNOLOGIES AND EMBODIES CONFIDENTIAL INFORMATION, TRADE SECRET INFORMATION, AND/OR KNOW-HOW THAT IS THE PROPERTY OF HARSCO TRACK TECHNOLOGIES. BY ACCEPTING THIS DRAWING OR DOCUMENT, THE RECIPIENT AGREES (1) NOT TO PROVIDE, OR OTHERWISE MAKE AVAILABLE, THE DRAWING OR DOCUMENT, OR ANY INFORMATION OR KNOW-HOW EMBODIED THEREIN, TO ANY THIRD PARTY AND (2) NOT TO REPRODUCE OR USE THE DRAWING OR DOCUMENT TO MANUFACTURE ANY APPARATUS OR DEVICE, WITHOUT THE PRIOR WRITTEN AUTHORIZATION OF HARSCO TRACK TECHNOLOGIES.

IMPLIED TOLERANCES
ALL DIMENSIONS ARE IN INCHES - TOLERANCE UNLESS OTHERWISE SPECIFIED

INCH				METRIC			
NOMINAL SIZE RANGE		PLUS OR MINUS		NOMINAL SIZE RANGE		PLUS OR MINUS	
OVER	TO	2 PLACE DECIMAL	3 PLACE DECIMAL	OVER	TO	1 PLACE DECIMAL	2 PLACE DECIMAL
0	6	.03	.005	0	150	.8	.127
6	24	.04	.008	150	600	1.0	.203
24	-	.06	.010	-	600	1.5	.254

UNLESS OTHERWISE SPECIFIED ALL MACHINED SURFACES WILL HAVE:
A SURFACE FINISH OF 125 MICROINCHES
ANGULAR TOLERANCE OF ± 30'
CONCENTRICITY WITHIN .010

THIRD ANGLE PROJECTION

UNLESS OTHERWISE SPECIFIED ALL WELDS SHOULD ADHERE TO THE LATEST HTT WELDING SPECIFICATION 101

CHANGE	R/L	REVISION	DATE
13116.44	A	RELEASE	8-20-05
13116.54	B	DEL IT- 41, P/N WAS L40818; REVISE CL NUMBERS PER CABLE DIAGRM	9-24-05
	F	NO CHANGE	

Description: R/H ARM CONSOLE ASSY
Drawing Number: ----------
Machine Type:
Model: H7280WAA.asm
Drawn: EP
Date Drawn: 8-20-05
Weight: ----------
Scale: 1:4
APVD Dwg: WG
APVD Eng: WG
Mat'l:

HTT
Harsco Track Technologies
Harsco
Columbia, SC

Part Number: H7280WAA
Size: D
Sheet: 2 of 3

Plotted by cjwolf on 8/14/2007 H7280WAA.dft

CABLE CONSTRUCTION CHART

		BOX END			DEVICE END			CABLE	
CABLE NO.	WIRE NOS.	FROM	ITEM (QTY)	OUTER INSL STRIP (INCHES)	TO	ITEM (QTY)	OUTER INSL STRIP (INCHES)	ITEM (QTY) (FEET)	CABLE P/N
CL104	0108,0114,0807,0115,0122, 1101,000, SPI-9	R/H ARM CONSOLE	N/A	28	MCB	6 (1)	48	59 (25 FT)	H7280WAACL104
CL400	(07129 BU, 07117 WH. N.O.) (0807 BN, 1101 BK N.O.)	R/H ARM CONSOLE	N/A	12	FLOOR SWITCH	N/A	N/A	55 (4 M)	H7280WAACL400
CL402	06094,06095,06096, 06097,06098,06099,06100, 06101,06111,07112,07113,07114, 07115,07116,07129,,000,SPI-8	R/H ARM CONSOLE	N/A	28	LHC	6 (1)	28	51 (11.5 FT)	H7280WAACL402

NOTE:

3-A INSTALL THE 4 SPACERS, IT-37, TO CONSOLE BOX BEFORE INSTALLING IT-29. USE BLUE LOCTITE, P/N 0-3040000-0-06, ON FLAT HEAD SCREWS, IT-38, USED TO SECURE SPACERS.

3-B DO NOT TIGHTEN 5/16" BOLTS FOR INPUT MODULE UNTIL IT-29, 128 INPUT SCANNER ASSY, IS SECURED BY THE FOUR SPACERS, AS SHIFTING THE 128 INPUT SCANNER ASSY MAY BE REQUIRED.

3-C CUT IT-8 16.5". CUT IT-9 TO 16". SECURE CHAIN IT'S 14, 15, 16 &17

3-D MARK BOTH ENDS OF WIRES WITH WIRE NUMBERS AND MARK CABLE WITH COMPLETE PART NUMBER.

3-E WHEN ORDERING REPLACEMENT CABLE, USE THE CABLE PART NUMBER, FOR EXAMPLE TO ORDER CL104, PART NUMBER H7280WAACL49

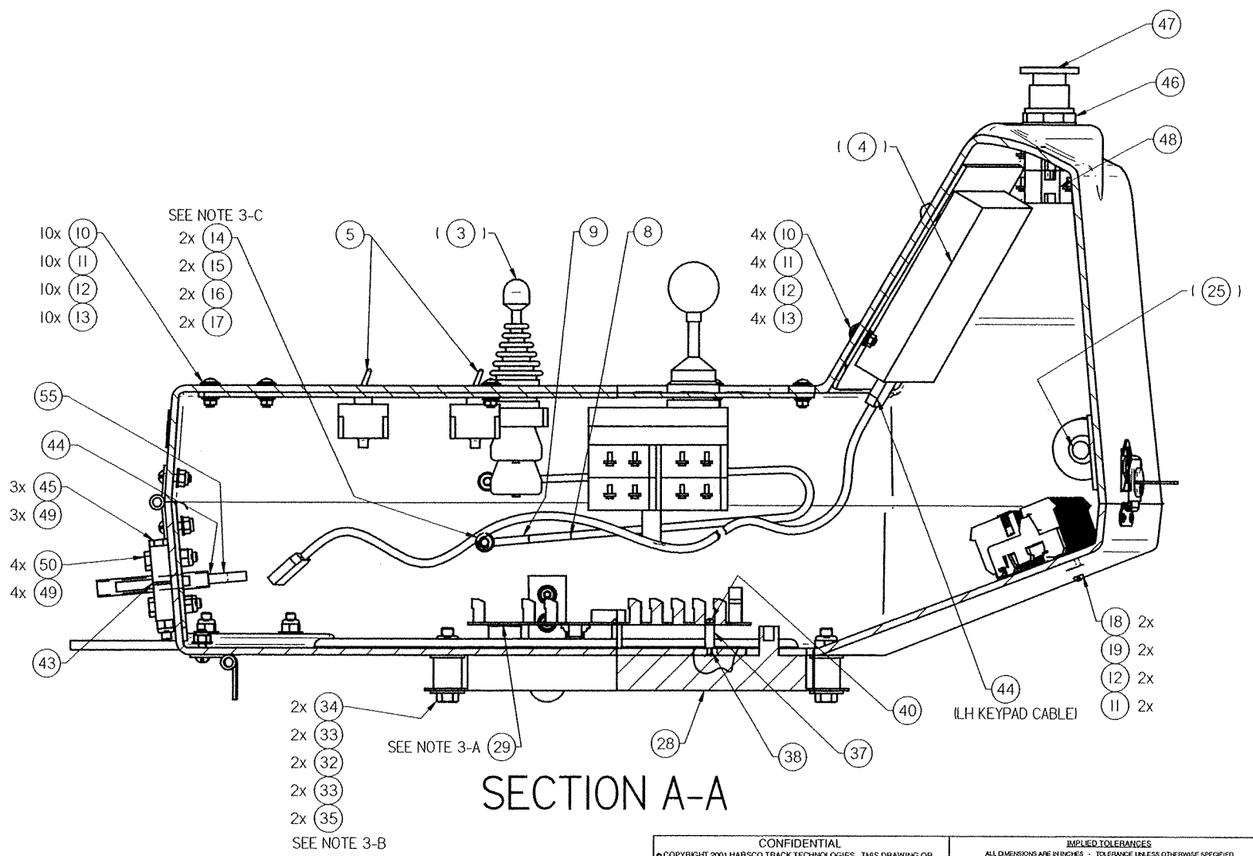

SECTION A-A

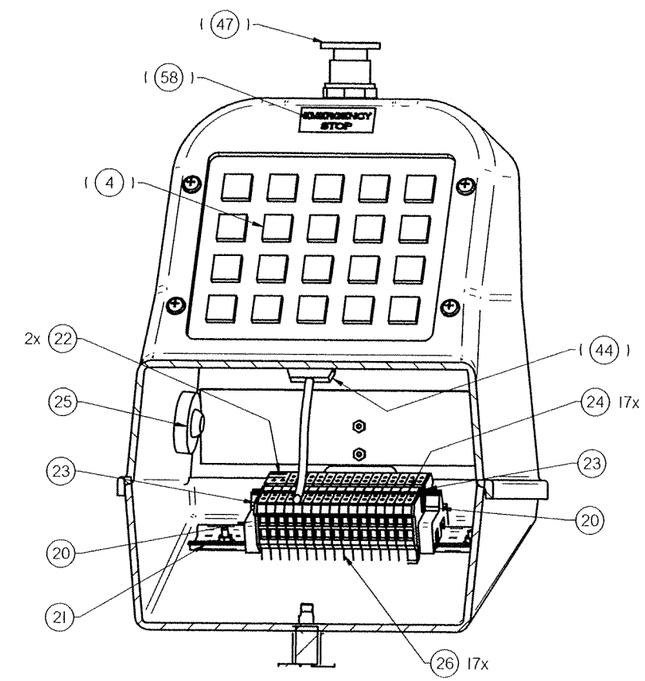

SECTION B-B

CONFIDENTIAL

© COPYRIGHT 2001 HARSCO TRACK TECHNOLOGIES. THIS DRAWING OR DOCUMENT IS THE PROPERTY OF HARSCO TRACK TECHNOLOGIES AND EMBODIES CONFIDENTIAL INFORMATION, TRADE SECRET INFORMATION, AND/OR KNOW-HOW THAT IS THE PROPERTY OF HARSCO TRACK TECHNOLOGIES. BY ACCEPTING THIS DRAWING OR DOCUMENT, THE RECIPIENT AGREES (1) NOT TO PROVIDE, OR OTHERWISE MAKE AVAILABLE, THE DRAWING OR DOCUMENT, OR ANY INFORMATION OR KNOW-HOW EMBODIED THEREIN, TO ANY THIRD PARTY AND (2) NOT TO REPRODUCE OR USE THE DRAWING OR DOCUMENT TO MANUFACTURE ANY APPARATUS OR DEVICE, WITHOUT THE PRIOR WRITTEN AUTHORIZATION OF HARSCO TRACK TECHNOLOGIES.

SOLID EDGE DRAWING

IMPLIED TOLERANCES

ALL DIMENSIONS ARE IN INCHES - TOLERANCE UNLESS OTHERWISE SPECIFIED

NOMINAL SIZE RANGE	INCH PLUS OR MINUS			NOMINAL SIZE RANGE	METRIC PLUS OR MINUS		
OVER	TO	2 PLACE DECIMAL	3 PLACE DECIMAL	OVER	TO	1 PLACE DECIMAL	2 PLACE DECIMAL
0	6	.03	.005	0	150	.8	.127
6	24	.04	.008	150	600	1.0	.203
24	-	.06	.010	-	600	1.5	.254

UNLESS OTHERWISE SPECIFIED ALL MACHINED SURFACES WILL HAVE A SURFACE FINISH OF 125 MICROINCHES AND A TOLERANCE OF +-30° CONCENTRICITY WITHIN .010

THIRD ANGLE PROJECTION

UNLESS OTHERWISE SPECIFIED ALL WELDS SHOULD ADHERE TO THE LATEST HTT WELD-ING SPECIFICATION 101

CHANGE	R/L	REVISION	DATE
13116.44	A	RELEASE	8-20-05
13116.54	B	DEL IT- 41, P/N WAS L40818; REVISE CL NUMBERS PER CABLE DIAGRM	9-24-05
13116.57	C	REMOVED WIRE 0115 FROM CL104 & CL402, WIRE 0114 WAS 0117 IN CL104. PJG/JOC	10-06-05
100329	D	ADDED 0115 & 0122 TO CL104	2-22-06
101152	E	UPDATED CL104 REMOVE WIRE 101122 ADDED WIRE 0122 WAS SPI-17 ADDED IT. 59	07-9-07
	F	NO CHANGE	

Description: R/H ARM CONSOLE ASSY

Drawing Number: ----------

Model: H7280WAA.asm

Weight: ----------

Scale: 1:4

Machine Type

Drawn: EP — Date Drawn: 8-20-05

APVD Dwng: WG — APVD Ch/Eng: WG

Mat'l

HTT
Harsco Track Technologies
Harsco
Columbia, SC

Part Number: H7280WAA — Size: D — Sheet: 3 of 3

Plotted by cjwolf on 8/14/2007 H7280WAA.dft

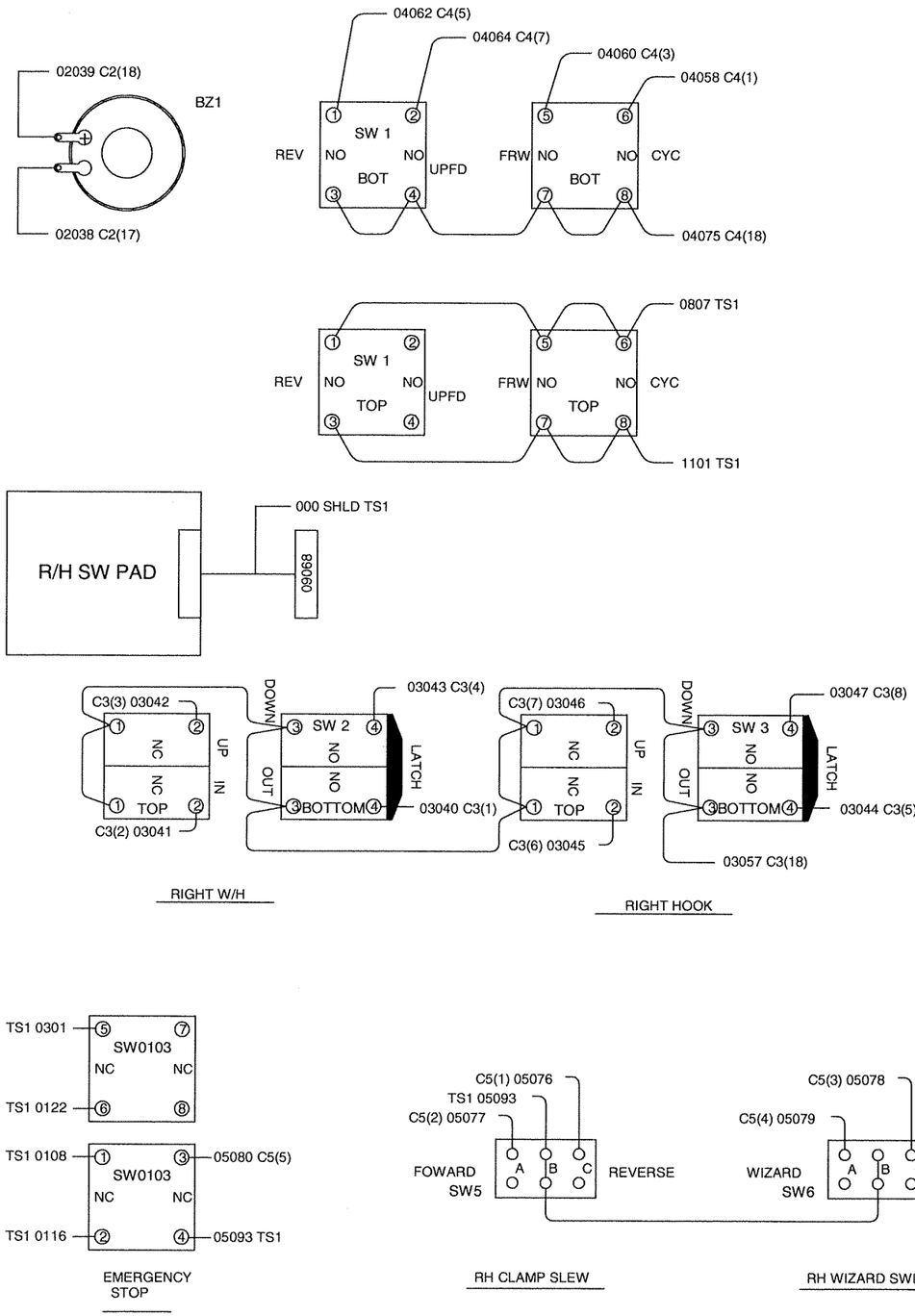

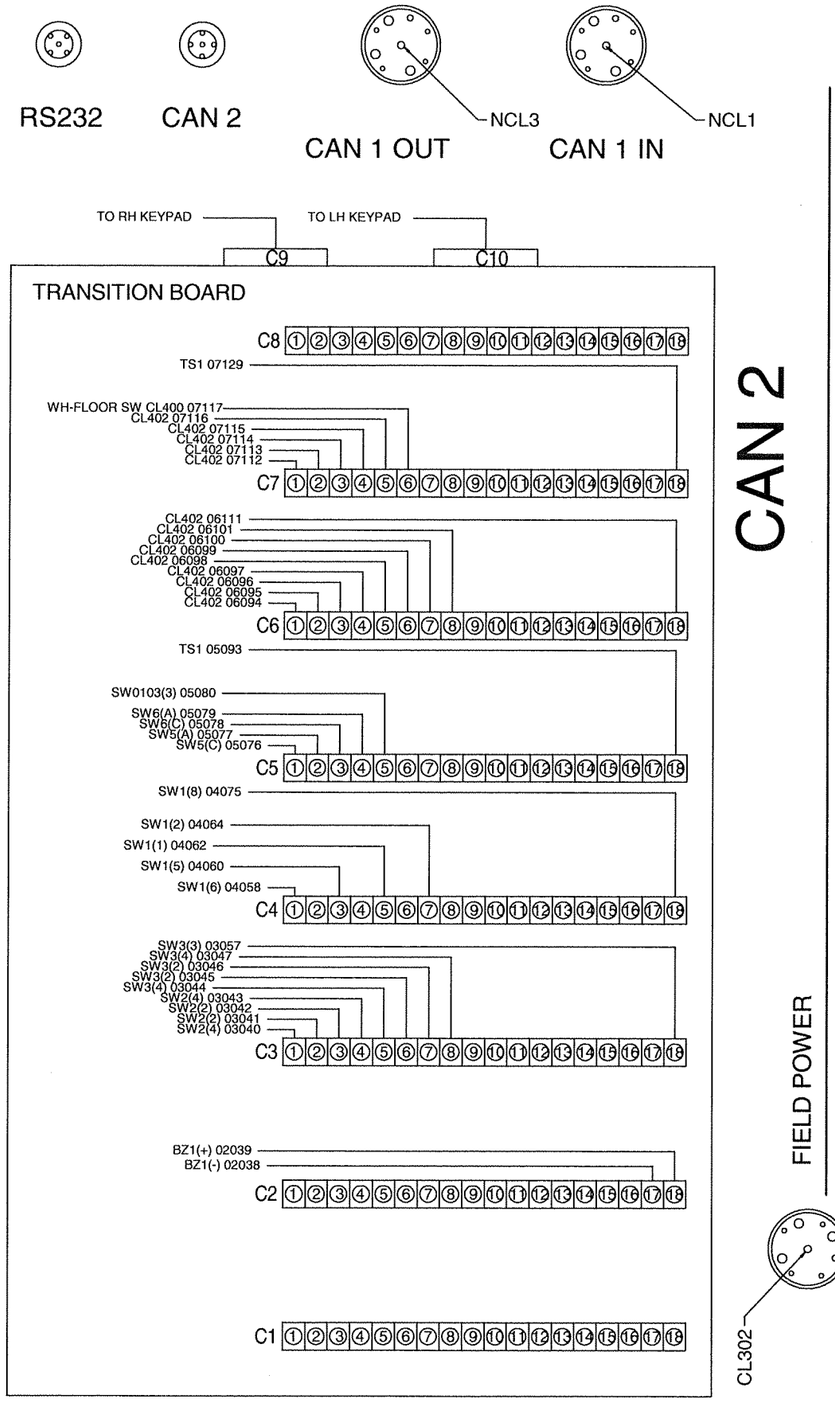

NOTES:
1. ALL WIRE TO BE #18 AWG UNLESS OTHER WISE INDICATED.
2. WIRING FOR H7280WAA

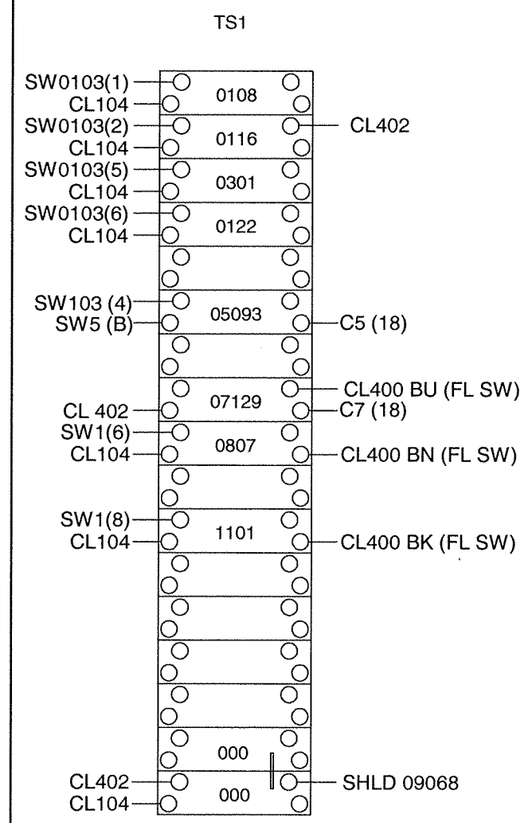

CONFIDENTIAL
© COPYRIGHT 2001 HARSCO TRACK TECHNOLOGIES. THIS DRAWING OR DOCUMENT IS THE PROPERTY OF HARSCO TRACK TECHNOLOGIES AND EMBODIES CONFIDENTIAL INFORMATION, TRADE SECRET INFORMATION, AND/OR KNOW-HOW THAT IS THE PROPERTY OF HARSCO TRACK TECHNOLOGIES. BY ACCEPTING THIS DRAWING OR DOCUMENT, THE RECIPIENT AGREES (1) NOT TO PROVIDE, OR OTHERWISE MAKE AVAILABLE, THE DRAWING OR DOCUMENT, OR ANY INFORMATION OR KNOW-HOW EMBODIED THEREIN, TO ANY THIRD PARTY AND (2) NOT TO REPRODUCE OR USE THE DRAWING OR DOCUMENT TO MANUFACTURE ANY APPARATUS OR DEVICE, WITHOUT THE PRIOR WRITTEN AUTHORIZATION OF HARSCO TRACK TECHNOLOGIES.

SOLID EDGE DRAWING

IMPLIED TOLERANCES
ALL DIMENSIONS ARE IN INCHES - TOLERANCE UNLESS OTHERWISE SPECIFIED

NOMINAL SIZE RANGE		INCH PLUS OR MINUS			NOMINAL SIZE RANGE		METRIC PLUS OR MINUS		
OVER	TO	2 PLACE DECIMAL	3 PLACE DECIMAL		OVER	TO	1 PLACE DECIMAL	2 PLACE DECIMAL	
0	6	.03	.005		0	150	.5	.13	
6	24	.04	.008		150	600	1.0	.20	
24	-	.06	.010		-	600	1.5	.25	

UNLESS OTHERWISE SPECIFIED ALL MACHINED SURFACES WILL HAVE:
A SURFACE FINISH OF 125 MICROINCHES
ANGULAR TOLERANCE OF ± 30'
CONCENTRICITY WITHIN .010

THIRD ANGLE PROJECTION

UNLESS OTHERWISE SPECIFIED ALL WELDS SHOULD ADHERE TO THE LATEST HTT WELDING SPECIFICATION 101

CHANGE	R/L	REVISION	DATE
101213	A	NEW RELEASE	8/08/07

Description: RH ARM CONSOLE WIRING
Drawing Number: ----------
Machine Type: MARK VI NS 2007
Model: 4014436.dft
Drawn: wgrier 2/22/06
Weight
Scale: 1:4
APVD Dwg: WG
APVD DXFg: WG
Mat'l

HTT
Harsco Track Technologies
Harsco
Columbia, SC

Part Number: 4014436
Size: D
Sheet: 1 of 1

Plotted by wgrier on 8/14/2007 4014436.dft

ENG.DWG.NO.
H5088WAA

REVISIONS						
NO	ER	DESCRIPTION	ZONE	DR	CK	APP
1	12425	NEW RELEASE		JFB		

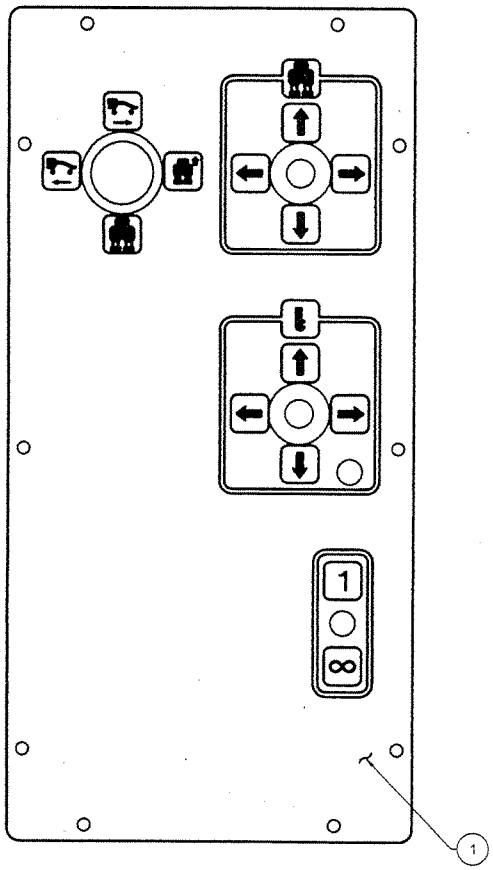

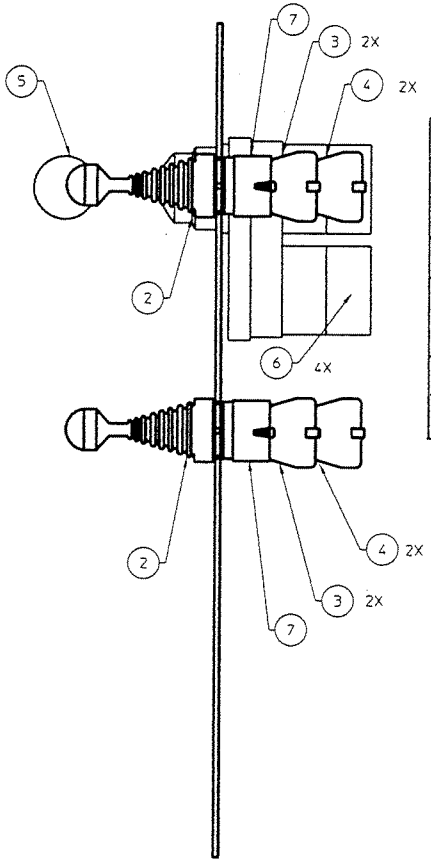

ITEM	PART NUMBER	DESCRIPTION	QTY
7	B1348Y06	MOUNTING LATCH	2
6	L40805	CONTACT BLOCK NO/NO	4
5	L426050	JOYSTICK	1
4	B1348Y03	CONTACT BLOCK NC	4
3	B1348Y02	CONTACT BLOCK, NO	4
2	B1348Y01	JOYSTICK	2
1	H5089W01	RH CONSOLE NAMEPLATE	1

FIG NO.	ITEM NO.	PART NUMBER	DESCRIPTION AND MATERIAL SIZE (REF.ONLY)

IMPLIED TOLERANCES
ALL DIMENSIONS ARE IN INCHES-TOLERANCE UNLESS OTHERWISE SPECIFIED

NOMINAL SIZE RANGE		PLUS OR MINUS			NOMINAL SIZE RANGE		PLUS OR MINUS		
OVER	TO	FRACTION	2 PLACE DECIMAL	3 PLACE DECIMAL	OVER	TO	FRACTION	2 PLACE DECIMAL	3 PLACE DECIMAL
-	1	1/64	.01	.003	6	24	1/64	.03	.008
1	6	1/32	.02	.005	24	-	1/16	.05	.010

ANGULAR DIMENSIONS PLUS OR MINUS 1 DEGREE
ALL MACHINED SURFACES TO HAVE A SURFACE FINISH OF 125 MICROINCHES UNLESS OTHERWISE SPECIFIED

WELDING SPECIFICATION
UNLESS OTHERWISE SPECIFIED ALL WELDS SHOULD ADHERE TO FAIRMONT TAMPER WELDING SPECIFICATION NO. 101

WEIGHT LBS
THIRD ANGLE PROJECTION
DO NOT SCALE
SHEET 1 CONT. — OF —

DESCRIPTION OF R/H NAMEPLATE ASSY
DRAWN JEB 11/20/01
CHECKED HW 11/20/01
APPROVED WG 11/20/01
MACHINE TYPE COLOMBIA MKVI
Fairmont Tamper
LAST CODE 12425 .37
SPECIFIED DWG DATE 20-Nov-01
H5088WAA

THIS DOCUMENT CONTAINS PROPRIETARY INFORMATION AND SUCH INFORMATION MAY NOT BE DISCLOSED TO OTHERS FOR ANY PURPOSE OR USED FOR MANUFACTURING PURPOSES WITHOUT THE WRITTEN PERMISSION OF FAIRMONT TAMPER

ENG.DWG.NO. H1826WAB

REVISIONS							
NO	ER	DESCRIPTION	ZONE	DR	CK	APP
1	12509	NEW RELEASE		EP		

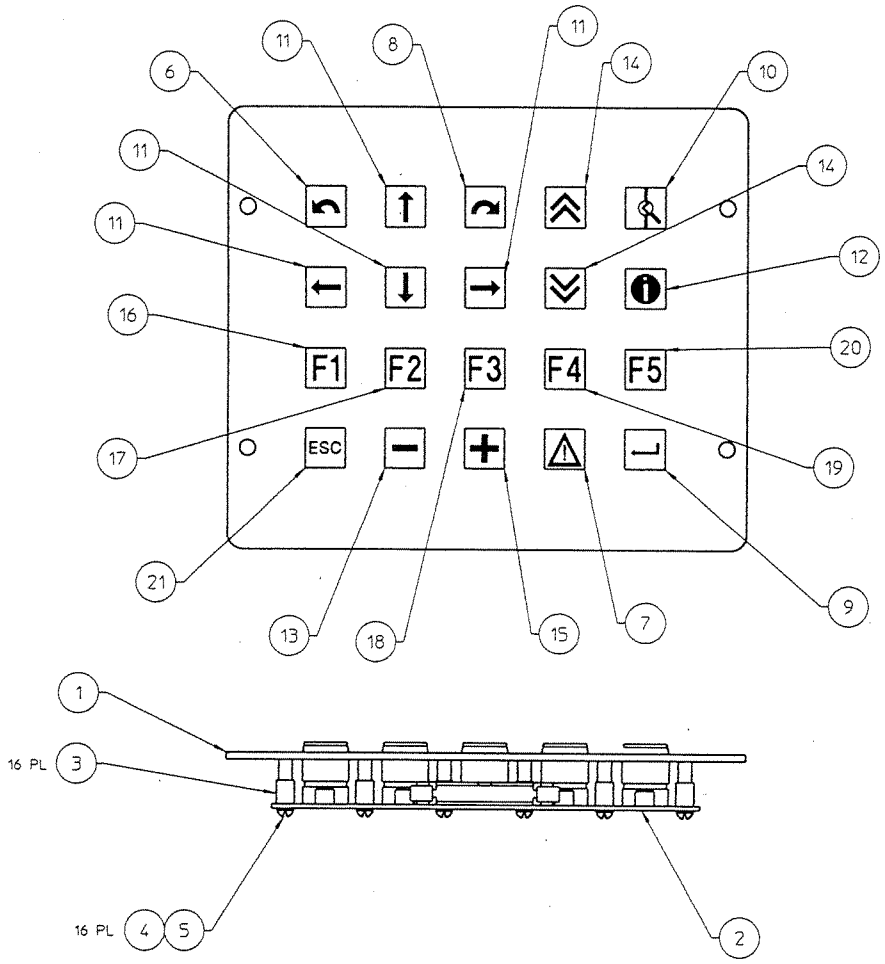

ITEM	PART NUMBER	DESCRIPTION	QTY
21	C8036Y21	FILM INSERT, ESC	1
20	C8036Y18	FILM INSERT, F5	1
19	C8036Y17	FILM INSERT, F4	1
18	C8036Y16	FILM INSERT, F3	1
17	C8036Y15	FILM INSERT, F2	1
16	C8036Y14	FILM INSERT, F1	1
15	C8036Y24	FILM INSERT, PLUS SIGN	1
14	C8036Y30	FILM INSERT, PAGE BACK	2
13	C8036Y25	FILM INSERT, MINUS SIGN	1
12	C8036Y31	FILE INSERT, INFORMATION	1
11	C8036Y27	FILM INSERT, ARROW	4
10	C8036Y36	FILM INSERT, ZOOM	1
9	C8036Y19	FILE INSERT, RETURN	1
8	C8036Y34	FILM INSERT, CROSS LEVEL RIGHT	1
7	C8036Y26	FILE INSERT, ALARMS	1
6	C8036Y32	FILM INSERT, CROSS LEVEL LEFT	1
5	A0061004	#6 LOCK WASHER	16
4	A0050019	6-32x7/8 RDHD MSCR	16
3	B1577Y04	SNAP IN NYLON SPACER	16
2	B0943WAB	SWITCH PAD ASSY	1
1	H1827W01	KEYPAD NAMEPLATE	1

NOTES:
1. ALL BUTTONS MUST MOVE FREELY
2. ITEMS 6 THRU 25: INSTALL ACCORDING TO PICTORAL REPRESENTATION

THIS DOCUMENT CONTAINS PROPRIETARY INFORMATION AND SUCH INFORMATION MAY NOT BE DISCLOSED TO OTHERS FOR ANY PURPOSE OR USED FOR MANUFACTURING PURPOSES WITHOUT THE WRITTEN PERMISSION OF FAIRMONT TAMPER

IMPLIED TOLERANCES
ALL DIMENSIONS ARE IN INCHES-TOLERANCE UNLESS OTHERWISE SPECIFIED

NOMINAL SIZE RANGE OVER	TO	PLUS OR MINUS FRACTION	2 PLACE DECIMAL	3 PLACE DECIMAL	NOMINAL SIZE RANGE OVER	TO	PLUS OR MINUS FRACTION	2 PLACE DECIMAL	3 PLACE DECIMAL
-	1	1/64	.01	.003	6	24	1/64	.03	.008
1	6	1/32	.02	.005	24	-	1/16	.05	.010

ANGULAR DIMENSIONS PLUS OR MINUS 1 DEGREE
√ ALL MACHINED SURFACES TO HAVE A SURFACE FINISH OF 125 MICROINCHES UNLESS OTHERWISE SPECIFIED.

FIG NO.	ITEM NO.	PART NUMBER	DESCRIPTION AND MATERIAL SIZE (REF.ONLY)
		WELDING SPECIFICATION	

UNLESS OTHERWISE SPECIFIED ALL WELDS SHOULD ADHERE TO FAIRMONT TAMPER WELDING SPECIFICATION NO. 101

WEIGHT LBS

DO NOT SCALE

THIRD ANGLE PROJECTION

SHEET 1 CONT. — OF —

DESCRIPTION: RIGHT KEYPAD ASSEMBLY

DRAWN	EP	6/8/02
CHECKED	DGV	6/10/02
APPROVED	WG	6/10/02
COMPANY		DATE

MACHINE TYPE: MARK IV JUPITER

Fairmont Tamper
2401 Commerce Avenue
Greenville, South Carolina 29607
(803) 233-1960

LAST ECN	12509
REV	30
CHECKED	DVGN
DATE	13-Jun-02

ENG.DWG.NO. H1826WAB

PARTS LIST

ITEM NO	PART NUMBER	DESCRIPTION	QUANTITY
1	D6456X03	AIR COND, HYD	1
2	A0036068	3/8-16 X 2 HHCS	7
3	L40387	3/8-16 ESNA NUT	7
4	A0036034	5/16-18 X 1 HHCS	8
5	L41582	5/16-18 ESNA NUT	8
6	A0036003	1/4-20 X 3/4 HHCS	4
7	L41157	1/4-20 ESNA NUT	4
8	B1623Y01	1/4 CORRUGATED CONDUIT	5

ASSEMBLY IDENTIFIER

DTSC-1 STABILIZER

ASSEMBLY DESCRIPTION

ER
DR
CK
APP
MF

REVISIONS

NO	ER	DESCRIPTION	DR	CK	APP	MF
1		NEW RELEASE	TAF	HW	AML	

DWG NO H3671WAA
SHEET 1
CONT ON –
DESCRIPTION (24) HYD A/C ASSY
DRAWN TAF
DATE 27 NOV 2000
CHECKED HW
DATE 9 JAN 2001
APP AML
DATE 3 JAN 2001
APP
DATE

SHEET 1
CONT ON –
LAST ECR 12232.19
CHECKED hwl
DATE 23-Jan-01
DWG NO H3671WAA

Fairmont Tamper™
2401 Edmund Road-Box 20
Cayce-West Columbia,
South Carolina 29171-0020
(803) 822-9160

ENG.DWG.NO.
H3671WAA

REVISIONS							
NO	ER	DESCRIPTION	ZONE	DR	CK	APP	MF
1		NEW RELEASE		TAF	HW	AML	

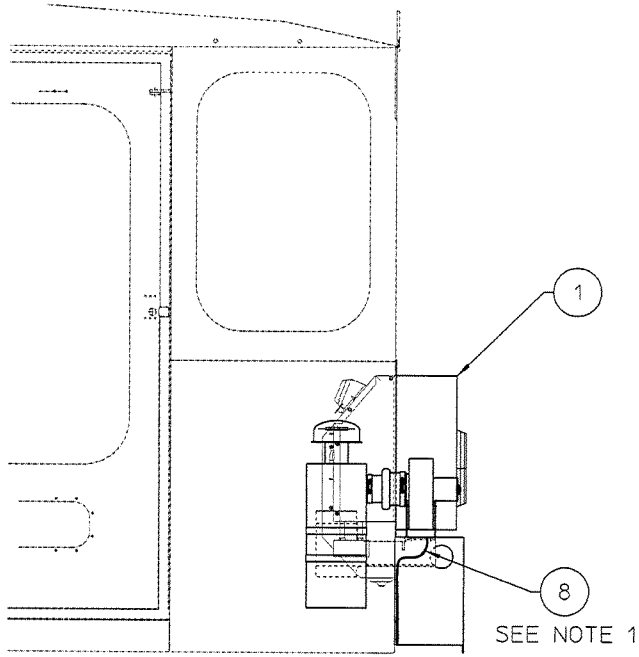

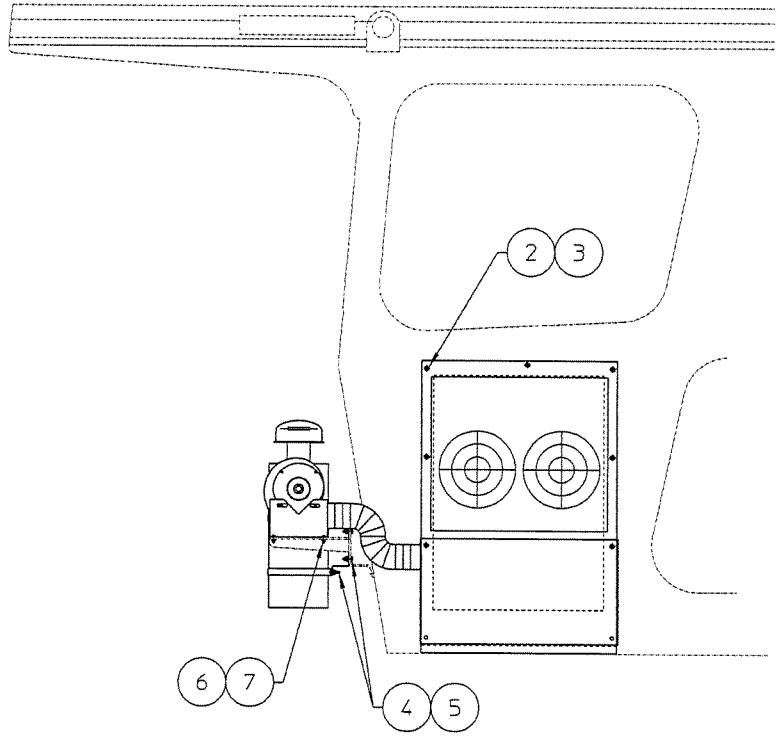

NOTES:

1- CUT 14 GA ORANGE LEAD TO LENGTH, SLEEVE WITH ITEM 9, AND CONNECT TO MOTOR.
2- PAINT EVAPORATOR SIDE OF A/C MOUNTING PLATE BEFORE INSTALLATION.
3- INSTALL WALL INSULATION AFTER A/C UNIT IS IN PLACE. FIT AROUND UNIT FOR BEST POSSIBLE APPEARANCE.

SCALE: 8

SEE SEPARATE PARTS LIST

FIG NO.	ITEM NO.	PART NUMBER	DESCRIPTION AND MATERIAL SIZE (REF.ONLY)	QTY

IMPLIED TOLERANCES
ALL DIMENSIONS ARE IN INCHES-TOLERANCE UNLESS OTHERWISE SPECIFIED

NOMINAL SIZE RANGE OVER	TO	PLUS OR MINUS FRACTION	2 PLACE DECIMAL	3 PLACE DECIMAL	NOMINAL SIZE RANGE OVER	TO	PLUS OR MINUS FRACTION	2 PLACE DECIMAL	3 PLACE DECIMAL
-	1	1/64	.01	.003	6	24	3/64	.03	.006
1	6	1/32	.02	.005	24	-	1/16	.05	.010

ANGULAR DIMENSIONS PLUS OR MINUS 1 DEGREE
ALL MACHINED SURFACES TO HAVE A SURFACE FINISH OF 50 MICROINCHES UNLESS OTHERWISE SPECIFIED.

WELDING SPECIFICATION
UNLESS OTHERWISE SPECIFIED ALL WELDS SHOULD ADHERE TO FAIRMONT TAMPER WELDING SPECIFICATION NO. 101

WEIGHT LBS.
3rd ANGLE PROJECTION
DO NOT SCALE
SHEET 1 CONT. — OF —

DESCRIPTION 124: HYD A/C ASSY

DRAWN TAF	DATE 27 NOV 00	MACHINE TYPE DTSC-1	
CHECKED HW	DATE 9 JAN 01		
APPROVED AML	DATE 3 JAN 01		
APP-MFG	DATE		
LAST EDIT. 12232 .19	CHECKED Dwl	ENG/DWG. H3671WAA	
	DATE 23-Jan-01		

Fairmont Tamper
3431 Edmund Road-Box 20
Cayce-West Columbia,
South Carolina 29171-0020
(803) 822-9163

THIS DOCUMENT CONTAINS PROPRIETARY INFORMATION AND SUCH INFORMATION MAY NOT BE DISCLOSED TO OTHERS FOR ANY PURPOSE OR USED FOR MANUFACTURING PURPOSES WITHOUT THE WRITTEN PERMISSION OF FAIRMONT TAMPER.

HTT

Harsco Track Technologies

Harsco

Catalog No. 4014305
June, 2007