Alcohol Detector using MQ-3 Sensor

MINI PROJECT REPORT

Submitted by

Dhruv Rathod (EE A 41)
Harsh Maneshwar(EE A 46)
Harsh Umredkar (EE A 47)

Under the Guidance of

Tejaswini Panse

Yeshwantrao Chavan College of Engineering
Hingna Road, Wanadongri, Nagpur- 441110
An Autonomous Institution
Affiliated to Rashtrasant Tukdoji Maharaj Nagpur University

MAY 2025

ABSTRACT

This project focuses on designing an alcohol detection system using the MQ3 gas sensor in combination with the Arduino Uno microcontroller. The MQ3 sensor is highly sensitive to alcohol vapors and is used to detect alcohol in a person's breath. When a person breathes near the sensor, it produces an analog signal based on the alcohol concentration. This signal is then processed by the Arduino Uno, which determines whether the alcohol level exceeds a predefined threshold. If the level is too high, the system activates a buzzer or displays a warning, and it can also be connected to other systems such as a vehicle ignition lock to prevent drunk driving. This low-cost, easy-to-build project demonstrates the practical application of sensor technology and microcontrollers in enhancing public and personal safety.

1.INTRODUCTION

Drunk driving is one of the leading causes of road accidents worldwide. It puts the lives of the driver, passengers, and others at risk.

To help reduce such accidents, we have developed an alcohol detection system using the MQ3 gas sensor and Arduino Uno. This system can sense alcohol from a person's breath.

The MQ3 sensor detects the presence of alcohol vapors and sends an analog signal to the Arduino Uno. The Arduino processes the signal and checks if the alcohol level is above a set limit.

If alcohol is detected beyond the limit, the system can trigger a buzzer or warning message. It can also be connected to a vehicle to prevent it from starting.

This project is low-cost, easy to build, and useful for enhancing safety in both vehicles and workplaces.

2.CIRCUIT DIAGRAM AND WORKING PRINCIPLE

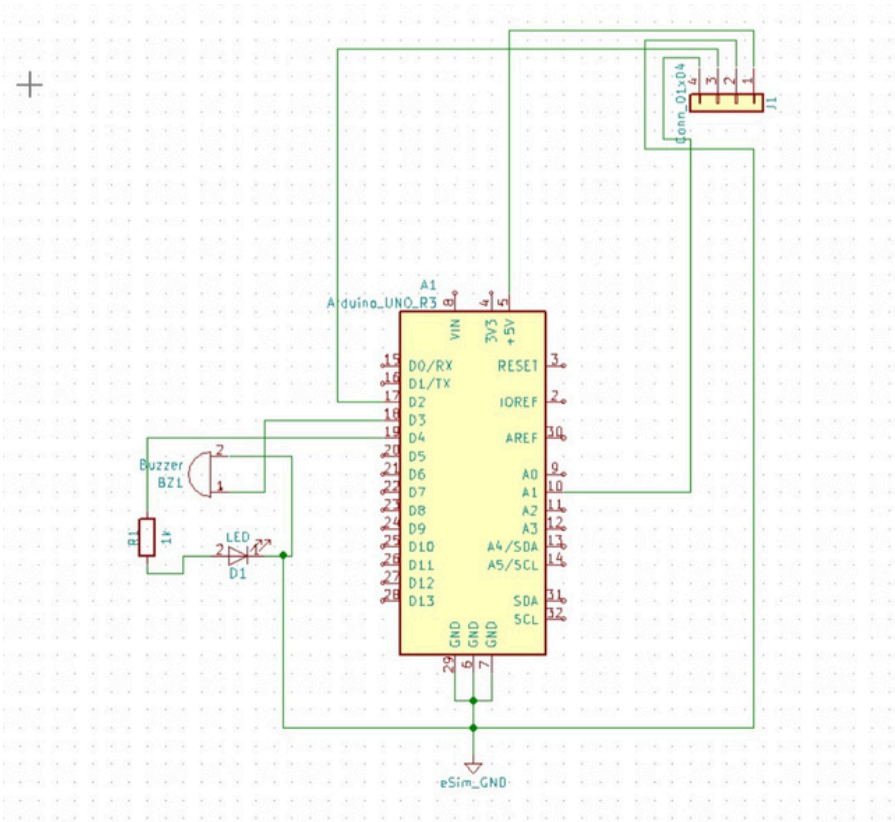

The MQ3 sensor is used to detect alcohol vapors present in the air. It is sensitive to alcohol and produces an analog voltage output based on the concentration.

When a person breathes near the sensor, the alcohol content in their breath reacts with the sensor. This changes the resistance inside the sensor and alters the output voltage.

The analog output from the MQ3 sensor is sent to the Arduino Uno. The Arduino reads this signal and compares it with a set threshold value.

If the alcohol level is higher than the threshold, the Arduino activates an alert system like a buzzer or an LED. It can also be used to control other devices like vehicle ignition.

This principle allows the system to quickly detect alcohol and respond with a safety action.

3. LIST OF COMPONENTS WITH BUDGET

Sr. No.	Component	Quantity	Price (Rs.)
1	Arduino Uno	1	550
2	MQ3 Alcohol Sensor	1	200
3	Buzzer (5V)	1	30
4	LED	1	5
5	Resistor (1k Ohm)	1	2
6	Power Supply (USB)	1	120
	Total Budget		Rs. 907

4. PCB DESIGNING STEP AND LAYOUT

1. Requirement Analysis and Planning:

Decide main features: detect alcohol, sound buzzer, glow LED. Plan use of MQ3 sensor with Arduino Uno, and power via USB. Enclose circuit safely, leaving sensor open to air.

2. Schematic Design:

Draw circuit showing MQ3 sensor to Arduino (A0 pin), buzzer and LED to digital pins, with resistor. Power the board via USB.

3. PCB Layout :

Place sensor in open area, arrange components compactly. Ensure neat wiring and proper spacing. Use breadboard if PCB not needed.

4. Verification and File Generation:

Test the circuit on breadboard. If using PCB, do Design Rule Check and generate Gerber files and BOM for manufacturing.

5. Assembly and Testing:

Assemble components, upload code to Arduino. Test with alcohol (e.g.sanitizer). Buzzer and LED should trigger. Mount in box with sensor exposed.

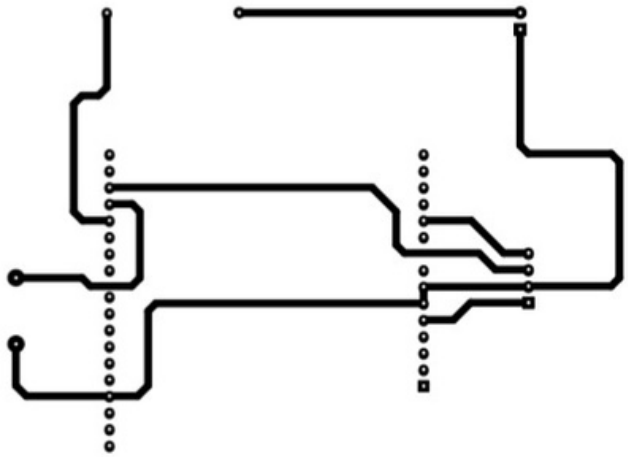

5. RESULT AND DISCUSSION

The alcohol detection system was successfully built using the MQ3 sensor and Arduino Uno. During testing, when alcohol-based substances such as sanitizer or spirit were brought near the sensor, the MQ3 sensor accurately detected the alcohol vapors. As a result, the buzzer sounded and the LED lit up, indicating the presence of alcohol in the environment.

The sensor responded quickly and sensitively to even small traces of alcohol. The threshold value set in the Arduino code played a key role in determining when the buzzer and LED were activated. The system worked consistently during multiple trials.

This project demonstrates a simple yet effective method for detecting alcohol in air, which can be useful for applications such as vehicle safety systems or workplace monitoring. However, environmental factors like temperature, humidity, and ventilation can slightly affect sensor readings, so calibration and proper enclosure design are important for real-world use.

Overall, the sensor performed reliably, demonstrating that a simple Arduino-based design can effectively detect alcohol presence with minimal cost and complexity

6. CONCLUSION

The alcohol detection system using the MQ3 sensor and Arduino Uno was successfully designed and implemented. The system effectively detected the presence of alcohol in the surrounding air and triggered both visual (LED) and audio (buzzer) alerts when the concentration crossed the defined threshold. The project demonstrated how a simple and low-cost electronic setup can be used for safety and monitoring purposes. With further improvements like calibration, display integration, or wireless communication, the system can be expanded for real-world applications such as vehicle driver checks or workplace safety systems.

REFERENCE

1. MQ-3 Alcohol Gas Sensor Datasheet
(https://www.sparkfun.com/datasheets/Sensors/MQ-3.pdf)

2. Arduino Uno Technical Documentation
(https://docs.arduino.cc/hardware/uno-rev3)

3. SparkFun PCB Design Tutorials
(https://learn.sparkfun.com/tutorials/designing-pcbs/all)

4. Proteus Design Suite (Labcenter Electronics)
(https://www.labcenter.com/products/proteus-pcb-design/)

5. Embedded Systems Resources
General references on microcontroller applications and embedded design from online platforms such as YouTube channels, Google, Chatgpt.

6. Main Source of Project
(https://www.electronicsforu.com/mini-projects-ideas#47-digital-piano)