**GURUGRAM METROPOLITAN DEVELOPMENT AUTHORITY**

**PLOT No-03, SEC-44,**
**Gurugram, Haryana-122003**

**Bid Document No. GMDA/SC/CIWMS/R/2023**

**December-2023**

**Name of work: "Supply, Installation, Integration and Commissioning of Centralized Integrated Water Management System (CIWMS)".**

## TABLE OF CONTENTS


| Sr. | Name of Contents | Page No. |
|---|---|---|
| | **INVITATION FOR BIDS** | |
| i | Press Notice | 3 |
| ii | Detailed Notice Inviting Tender | 4-6 |
| iii | Key Dates | 7 |
| | **SECTION-1** | |
| | Instructions to Bidders (ITB) | 8-36 |
| | **SECTION-2** | |
| | Qualification information | 37-38 |
| | **SECTION-3** | |
| | Conditions of Contract & Contract Data | 39-77 |
| | **SECTION-4** | |
| | Project Summary, Scope of work & Technical Specifications | 78-144 |
| | **SECTION-5** | |
| | Tender Evaluation Criteria | 145-150 |
| | **SECTION-6** | |
| | Bill of quantities | 151-158 |
| | **SECTION-7** | |
| | Standard Forms Letter of Acceptance and Other Forms | 159-186 |
| | **SECTION-8** | |
| | Drawings & List of Locations | 187-194 |

**e-Tender Notice**

**PRESS NOTICE**

**GURUGRAM METROPOLITAN DEVELOPMENT AUTHORITY**
**Notice Inviting Tender**

**No. GMDA/SC/CIWMS/R/2023** **Dated: 01.12.2023**

The Chief Executive Officer, GMDA invites online bids through e-tendering mode on the website http://etenders.hry.nic.in for the work detailed in the table.

| | |
|---|---|
| Name of Work: | **Supply, Installation, Integration and Commissioning of Centralized Integrated Water Management System (CIWMS)** |
| Time Limit | 12 (Twelve) months |
| Tenders to be received till: 11.01.2024 up to 17:00 hrs. | |

1. Pre-bid meeting (if applicable) will be held on 19.12.2023 in the office of Advisor, Smart City, GMDA, Gurugram.
2. Pre-bid queries may be submitted latest by 22.12.2023 up to 17:00 Hrs. on email ID: adv.gmda@gov.in
3. Bidder shall pay Rs. 1180/- as E-Service fee through Net Banking in favour of "Society for IT initiative fund for e-Governance" payable at Chandigarh.
4. For further details and e-tendering schedule please visit website http://etenders.hry.nic.in

**For and on behalf of Chief Executive Officer, GMDA**

**Smart City Division**
**Phone No: 0124-2746633**
**Email: adv.gmda@gov.in**

## DETAIL NOTICE INVITING TENDER

The Chief Executive Officer, GMDA invites the bids from the eligible bidders through online bid on the portal ***https://etenders.hry.nic.in*** for the work detailed in the table below.

| SN | District | Name of Work | Period of completion | Estimated Cost (Rs. in Cr.) | EMD to be deposited | Tender document fee and E-service fee (Rs.) + GST extra as applicable |
|---|---|---|---|---|---|---|
| **1** | **2** | **3** | **4** | **5** | **6** | **7** |
| **1** | **Gurugram** | **Supply, Installation, Integration and Commissioning of Centralized Integrated Water Management System (CIWMS)** | 12 months | Rs. 17.5 Cr. (project cost +5 years O&M and AMC) (Including GST) | Rs.35 Lacs | Rs. 10000/- Tender Fees + Rs. 1000/- E-service fee |

1. Date of release of invitation for bids through e-procurement: (01.12.2023)
2. Cost of Bid Form: Rs.10000/- + 18% GST extra.
3. Availability of Bid document and mode of submission:

The tender shall be submitted by the tenderer in the following three separate envelops:

1. Earnest Money/bid Security/Tender Document fee- Cover 'BS' (online)
2. N.I.T. and Technical Bid- Cover 'TI' (online)
3. Tender in form- A (Price Bid)- Cover 'C I' (Online)

Note: EMD, Price Bid are to be submitted mandatory online and shall not be accepted in any physical form. However, Technical Bid is to be submitted Online as well as in Physical form.

In the first instance, the Envelop- 'BS' of all the Bidders containing the Bid Security shall be opened online. If the Bid Security/Earnest Money and tender document fee are found proper, Technical Bid shall be opened (online) in the presence of such contractors who choose to be present. The Financial Offer in Cover in 'CI' shall be opened (online) only if the tenderers meet the qualification criteria as per the Bid document. The date of opening of Financial bid shall be intimated separately at the time of opening of Technical Bid.

The Contractual Agencies will submit the necessary documents as under.

Online BS Cover- Details of Bid Security and scanned copy of Bid Security. Details of tender document fee and scanned copy.

In case Financial bid is submitted but Bid Security or Tender document Fee or both has not been submitted or submitted after due date & time by any bidder, then bidder would be debarred from further tendering in GMDA for a period of minimum one year.

Exemption of tender document fees of the Contractors/Agencies.

1. "Single tender shall normally not be considered unless there are special circumstances to do so. In such eventuality, decision to accept the single tender shall be as prescribed in the rules. If special circumstances are not present. Tenders shall be re-called. If re-tendering again results in a single tender its acceptance may be considered with proper justification and reasons".

2. Those bidders shall not be required to pay tender document fees, who choose to submit bids again on tender being re-called on account of single tender/bid being received or first call.

5. Submission of Original Documents: Willing Contractors shall have to pay the e- Service Fees of Rs. 1180/- in favor of 'Society for IT initiative fund for e – Governance through Debit Cards & Internet Banking Accounts are required to be paid online directly through Internet Baking Accounts. The Bid Security/ earnest money will have to be submitted online as specified in the bidding document. However, as the details of the Bid Security and Tender document fee are required to be filled at the time of Bid Preparation and Submission stage, the Bidders are required to keep the BS ready appropriately.

6. Last Date/ Time for receipt of bids through e-tendering: (11.01.2024) upto17:00 Hrs.

7. The site for the work is available.

8. Only online submission of bids is permitted, therefore; bids must be submitted online on website http://etenders.hry.nic.in. The technical qualification part of the bids will be opened online at O/o Advisor Smart City Division, GMDA, Gurugram GMDA on 12.01.2024 at 15:00 hrs by the authorized officers. If the office happens to be closed on the date of opening of the bids as specified, the bids will be opened online on the next working day at the same time.

9. Last date of Bid Validity: 120 days from date of bid opening.

10. The bid for the work shall remain open for acceptance during the bid validity period to be reckoned from the last date of **'online submission of BS**. If any bidder/ renderer withdraws his bid/ tender before the said period or makes any modifications in the terms and conditions of the bid, the earnest money shall stand forfeited. Bids shall be valid for 120 days from the date of bid closing i.e. from last date of Online submission of EMD. In case the last day to accept the tender happens to be holiday, validity to accept tender will be the next working day.

11. Bidders may bid for any one or more of the works mentioned in the Table above. To qualify for a package of contracts made up of this and other contracts for which bids are invited in the same NIT, the bidder must demonstrate having experience and resources sufficient to meet the aggregate of the qualifying criteria for the individual contracts.

12.

(i) Other details can be seen in the bidding documents. The Employer shall not be held liable for any delays due to system failure beyond its control. Even though the system will attempt to notify the bidders of any bid updates, the Employer shall not be liable for any information not received by the bidder. It is the bidders' responsibility to verify the website for the latest information related to the tender.

(ii) DNIT& Prequalification criteria can be seen on any working day during office hours in office of the undersigned.

(iii) Conditional tenders will not be entertained & are liable to be rejected.

(iv) In case the day of opening of tenders happens to be holiday, the tenders will be opened on the next working day. The time and place of receipt of tenders and other conditions will remain unchanged.

(v) The undersigned reserve the right to reject any tender or all the tenders without assigning any reason.

(vi) The societies shall produce an attested copy of the resolution of the Co-Operative department for the issuance of tenders.

(vii) The tender without earnest money / bid security / tender document fee will not be opened.

(viii) The jurisdiction of court will be at Gurugram.

(ix) The tender of the bidder who does not satisfy the qualification criteria in the bid documents are liable to be rejected summarily without assigning any reason and no claim whatsoever on this account will be considered.

13. Bidding documents consisting of Instruction to bidders, qualification information and eligibility criteria of bidders, plans, the schedule of items work to be done and the set of terms & conditions of contract to be complied with by the Contractor can be seen online on ***https://etenders.hry.nic.in*** & GMDA website https://www.gmda.gov.in.

14. Bidder to submit one copy of physical document only (Technical bid) in printed format before bid opening in sealed condition.

For and on behalf of Chief Executive Officer, GMDA

Smart City Division
Phone No: 0124-2746633
Email: adv.gmda@gov.in

## KEY DATES

| | | | |
|---|---|---|---|
| **1.** | **Date of Issue of Notice Inviting Bid** | **:** | Date: 01.12.2023 |
| **2.** | **Period of availability of Bidding Documents on website http://etenders.hry.nic.in** | **:** | **From** 01.12.2023 till submission |
| **3.** | **Submission of pre-bid queries** | **:** | 22.12.2023 upto 17:00 hrs |
| **4.** | **Deadline for Receiving Bids online** | **:** | 11.01.2024 upto 17:00 hrs |
| **5.** | **Opening of Bids (Tender Document fee & Earnest Money DeclarationForm)** | **:** | 12.01.2024 at 15:00 hrs |
| **6.** | **Time and Date for opening of Part-I of the Bid (Technical Qualification Part)** | **:** | 12.01.2024 at 15:00 hrs |
| **7.** | **Time and Date of opening of Part-II of the Bid(Financial Part) of the Bidders who Qualify in Part I of the Bid.** | **:** | To be intimated. |
| **8.** | **Last Date of Bid Validity** | **:** | 120 days from the date of bid opening. |
| **9.** | **Officer inviting Bids** | | For and on behalf of Chief Executive Officer, GMDA<br><br>Smart City Division<br>Phone No: 0124-2746633<br>Email: adv.gmda@gov.in |

**Section 1: Instructions to Bidders**

**Table of Clauses**


**A. General**

1. Scope of Bid
2. Source of Funds
3. Eligible Bidders
4. Qualification of the Bidder
5. One Bid per Bidder
6. Cost of Bidding
7. Site Visit

**B. Bidding Documents and Evaluation**

8. Content of Bidding Documents.
9. Clarification of Bidding Documents andPre-Bid Meeting.
10. Amendment of Bidding Documents.

**C. Preparation of Bids**

11. Language of Bid
12. Documents Comprising the Bid.
13. Bid Prices
14. Currencies of Bid.
15. Bid Validity
16. Earnest money
17. Alternative Proposals by Bidders.

**D. Submission of Bids**

18. Bidding Through e-Tendering system.
19. Electronic Submission of Bids.
20. Deadline for Submission of Bids.
21. Late Bids, Modifications / Withdrawal.

**E. Bid Opening**

22 Bid Opening

23. Process to be Confidential.
24. Clarification of Bids and Contacting the Employer.
25. Examination of bids and Determination of Responsiveness.
26. Evaluation and Comparison of Bids.
27. Correction of Errors
28. Adjustment in Bid price
29. Evaluation and Comparison of bids

**F. Award of Contract**

30. Award Criteria
31. Employer's Right to Accept any Bid and to Reject any or all Bids.
32. Notification of Award and Signing of Agreement.
33. Performance Security.
34. Advances
35. Corrupt or Fraudulent Practices.
36. Debarring
37. Completion of work

## A. General

### 1. Scope of Work

**1.1** The Employer (named in the Contract data) on behalf of **Chief Executive Officer, GMDA, Gurugram** invites bids for the construction of Works as described in these documents and referred to as "the Works". The name of the works is provided in the Appendix to ITB. The bidders may submit bids for any or all of the works detailed in the table given in the Notice Inviting Tender. Bid for each work should be submitted separately.

**1.2** The successful Bidder will be expected to complete the Works by the Intended Completion Date specified in the **Contract data**.

***1.3*** Throughout these documents, the terms "bid" and "tender" and their derivatives (bidder/tenderer, bid/tender, bidding/tendering etc.) are synonymous.

**1.4** The jurisdiction of court will be as defined as in Appendix to ITB

### 2. Source of Funds

**2.1** The expenditure on this project will be met from the budget provided by the Govt. ofHaryana.

### 3. Eligible Bidders

**3.1** The Invitation for Bids is open to all registered bidders on the portal ***https://etenders.hry.nic.in*** and eligible bidders meeting the eligibility criteria as defined in ITB. For bid amount exceeding Rs. 100 crore, the Joint Ventures are allowed.

**3.2** Bidders shall not be under a declaration of ineligibility for corrupt and fraudulent practices by the Central Government, the State Government or any public undertaking, autonomous body, authority by whatever name called under the Central or the State Government.

### 4. Qualification of the Bidder

**A) For works put to tender upto Rs. 25.00 Lacs, a valid Registration/ contractor's id on Haryana Engineering Works Portal. (No technical evaluation shall be carried out for this category). The intending bidders who are not registered are required to submit the following documents in place of Registration:**

Interested bidders who are not registered should upload the following documents at the time of bidding:

**a. Mandatory Documents**

i. Proof of Constitution - Partnership deed (in case of the partnership firm registration); or Certificate of Incorporation (in case of Private limited company, public limited company, Public sector undertaking, Limited Liability Partnership, registration); or Any proof substantiating constitution (in the case of society, trust, AOP, Government department, local authority, statutory body registration.)

ii. PAN Card

iii. GST Certificate

iv. Undertaking of Non-Blacklisting – (Certificate that contractor has not been blacklisted previously)

v. Proof of immovable properties/self-certification that doesn't have any property
vi. Cancelled Cheque / Proof of bank account
vii. Proof of Address
viii. Similar works experience for the category of registration
ix. The applicant himself or his employee (at least one) should be a Diploma Holder Engineer (Civil/Electrical/Agri./Hort.) as applicable. Accordingly, self-declaration certificate of applicant and his employee along with copy of Diploma certificate is to be submitted.
x. In case of registration for electrical works the applicant or the employee of the applicant should submit valid Wireman License from Chief Electrical Inspector, Haryana

**b. Optional Documents**

i. TAN Number Document
ii. MSME Registration Certificate (If Applicable)
iii. Form 26AS for last three years (Provided by Income Tax Department)
iv. LLCs (Limited Liability Company) to upload last audited balance sheet
v. Change of constitution of agency
vi. Litigation History (If any)
vii. List of Abandoned works (if any)
viii. Any Other relevant documents

**In case during examination it is found that any bidder for this category of works has not submitted above mandatory documents or has submitted false documents his bid shall be rejected.**

**B) For works put to tender from Rs. 25.01 Lacs to Rs. 64.00 Lacs, a valid registration and contractor's id on Haryana Engineering Works Portal with proof of ownership/ lease of specified machinery/ manpower as listed in Clause 39 of this document.**
**(Technical Evaluation shall be carried out as per the requirement specified in Clause 39 of this document and financial bid of only responsive qualifying bidders shall be opened)**

**C) For works put to tender from Rs. 64.01 Lacs onwards, following qualification criteria is required to be fulfilled: -**

**4.1** All bidders shall provide the Qualification Information as specified in Section-2 of thisdocument, Forms of Bid and the undertaking(s) as specified in Section 7. The undertaking should be of a date after the first invitation of this tender. Initially the scanned copy of undertaking(s) shall have to be submitted in technical bid and before signing the agreement, the original undertaking(s) should be submitted by the bidders to the concerned Executive Engineer. The undertaking(s) in original shall make integral part of the agreement

**4.2** **All bidders participating in tenders costing more than Rs. 25.00 lacs shall include the following information and documents with their bids in Section 2, Qualification Information unless otherwise stated in the Appendix to ITB:**

(a) Copies of original documents defining the constitution or legal status, place of registration, and principal place of business; written power of attorney of the signatory of the Bid to commit the Bidder;

(b) Total annual financial turnover of each of the last three years duly certified by Chartered Accountant;

(c) (i) Experience in works of a similar nature and size for each of the last seven years with certificates from the concerned officer not below the rank of Executive Engineer or equivalent;

(ii) and details of works in progress or contractually committed with detail of clients who may be contacted for further information on those contracts;

(d) The undertakings as per the format and language given in Section 7 of the document. The undertakings should be of a date after the invitation of this tender. The bids accompanying with the language deviated from the language of the draft provided in Section 2 shall be treated as non – responsive.

**4.3** All care should be taken by the bidder to submit correct information and documents in first place. No cognizance of the documents submitted subsequently by the bidder on his own regarding his technical bid shall be taken. However, clarification can be sought upto the extentof clearing any doubt on the documents already submitted online.

**4.4** Joint Ventures are permitted to bid for the work as defined in the Appendix to ITB. Bids submitted by a Joint Venture (JV) shall comply with the following requirements:

**a.** There shall be a Joint Venture Agreement (as per the format given in Section-7) specific for these contract packages between the constituent firms, indicating clearly, amongst other things, the proposed distribution of responsibilities both financial as well as technical for execution of the work amongst them. For the purpose of this clause, the most experienced lead partner will be the one defined. A copy of the Joint Venture agreement shall be submitted before any award of work could be finalized.

**b.** The bid, and in the case of the successful bidder, the Form of Agreement, etc., shall be signed and / or executed in such a manner as may be required for making it legally binding on all partners (including operative parts of the ensuing Contract in respect of Agreement of Arbitration, etc.). On award of work, the Form of Agreement and Contract Documents shall be signed by all partners of the Joint Venture to conclude Contract Agreement.

**c.** Lead partner shall be nominated as being partner-in-charge; and this authorization shall be evidenced by submitting a power of attorney signed by the legally authorized signatories of all the partners.

**d.** The partner-in-charge shall be authorized to incur liabilities and to receive instructions for and on behalf of the partners of the Joint Venture, whether jointly or severally, and entire execution

of the Contract (including payment) shall be carried out exclusively through the partner-in-charge. A copy of the said authorization shall be furnished in this Bid.

**e.** All partners of the Joint Venture shall be liable jointly and severally for the execution of the Contract in accordance with the Contract terms, and a relevant statement to this effect shall be included in the authorization mentioned under sub clause I above as well as in the Form of Tender and the Form of Agreement (in case of a successful bidder).

**f.** In the event of default by any partner, in the execution of his part of Contract, the Employer shall be so notified within 30 days by the partner- in-charge, or in the case of the partner-in-charge being the defaulter, by the partner nominated as partner-in-charge of the remaining Joint Venture. The partner-in-charge shall, within 60 days of the said notice, assign the work of the defaulting partner to any other equally competent party acceptable to the Employer to ensure the execution of that part of the Contract, as envisaged at the time of bid. Failure to comply with the above provisions will make the Contractor liable for action by the Employer under the Conditions of Contract. If the Most Experienced i.e. Lead Partner defined as such in the Communication approving the qualification defaults, it shall be construed as default of the Contractor and Employer will take action under the Conditions of Contract.

**g.** Notwithstanding the permission to assigning the responsibilities of the defaulting partner to any other equally competent party acceptable to the Employer as mentioned in sub clause (f) above, all the partners of the Joint Venture will retain the full and undivided responsibility for the performance of their obligations under the Contract and/ or for satisfactory completion of the Works.

**h.** The bid submitted shall include all the relevant information as required under the provisions of Sub-Clause 4.5 D of ITB and furnished separately for each partner.

**4.5 Qualification Criteria**

**4.5A** To qualify for award of the contract, each bidder in its name should have: -

i) Minimum average annual financial turnover (as certified by the Charted Accountant) during the last three years, ending 31st March of the previous financial year, should not be less than 30% of the value of work. The turn over shall be updated to price level of the last financial year at the rate of 8% per year compounded yearly.

1. The bidder should have experience of having successfully completed or substantially completed similar works i.e. Setting up and Maintenance of Centralized Integrated Water management System (CIWMS) based water supply or water distribution system consisting of CIWMS Software, IT Infrastructure, Field Instrumentation at multiple locations such as Flow Meters, Level Measuring Sensors, Flow Control Devices, Pressure monitoring & control devices, Sluice Valves & Valve Actuators, IoT Gateway/PLCs/RTU/RPU, Water Quality Sensors, Pump Monitoring Systems of WTPs along with interface of central monitoring and control form ICCC during the last seven years ending last day of month previous to the one in which bids are invited in any Smart City / Municipal Corporations / Utilities Department of State Government / Central Government /Govt. Authority / with documentary proof comprising of LoA / PO / Completion certificate) having cost of executed work should be either of the following: -

(i) Three similar works each costing not less than 40% of value of work

Or

(ii) Two similar works each costing not less than 50% of value of work

Or

(iii) One similar works each costing not less than 80% of value of work

The amount of works shall be updated to price level of the last financial year at the rateof 8% per year compounded yearly.

Note 1: - The works may have been executed by the applicant as Prime contractor or as a member of Joint Venture or sub-contractor. As sub-contractor, he should have acquired the experience of execution of all major items of works under the proposed contract. In case a project has been executed by a Joint Venture, the turnover or experience shall be evaluated in proportion to their participation of the Joint Venture. In case of experience as a sub-contractor,the certificate from the Principal Employer shall have to be furnished.

Note 2: - Substantially completed works means those works which are at least 50% completed as on the date of submission (i.e. gross value of work done up to the last date of submission is 50% or more of the original contract price) and continuing satisfactorily.

Note 3: - Similar works means works as indicated under Clause 4.5 E, SN. 8 "Technical Capability".

For these, a certificate from the employer shall be submitted along with qualification information clearly mentioning the name of work, Contract Value, billing amount. Date of commencement of works, satisfactory performance of the Contractor and any other relevant information.

**4.5 B** Each bidder must produce:

(i) An affidavit (format affidavit to be attached) in the prescribed format given in this document. The affidavit should be of a date later then the date of calling of tender; and

(ii) Such other certificates as defined in the Appendix to ITB. Failure to producethe certificates shall make the bid non-responsive.

**4.5 C** To qualify for a package of contracts made up of this and other contracts for whichbids are invited in the Notice Inviting Tender, the bidder must demonstrate having experience and resources sufficient to meet the aggregate of the qualifying criteria for the individual contracts.

**4.5 D** If bidder is a Joint Venture, the partners would be limited to three (including lead partner). Joint Venture firm shall be jointly and severally responsible for completion of the project. Joint Venture must fulfill the following minimum qualification requirement.

i. The lead partner shall meet not less than 50% of qualification criteria given in sub-clause 4.5 A (a) & (b) of ITB above.

ii. Each of the remaining partners shall meet not less than 25% of all the criteria given in sub-clause 4.5 A (a) & (b) of ITB above.

iii. The Joint Venture must also collectively satisfy the subject of the criteria of Clause 4.5 B and 4.5 C of ITB for this purpose the relevant figures for each of the partners shall be added together to arrive at the Joint Venture total capacity which shall be 100% or more.

iv. In the event that the Employer has caused to disqualify under Clause 4.7 of ITB below all of the Joint Venture partners will be disqualified.

v. Joint Venture Applicants shall provide a certified copy of the Joint Venture Agreement in demonstration of the partners undertaking joint and several liabilities for the performance of any contract entered into before award of work.

vi. The available bid capacity of the JV as required under Clause 4.6 of ITB below will be applied for each partner to the extent of his proposed participation in the execution of the work. The total bid capacity available shall be more than estimated contract value.

vii. The Sub-Contractors' experience and resources shall not be taken into account in determining the bidder's compliance with the qualifying criteria.

**4.5. E** Tenderer participating in the procurement process shall also possess the following minimum Qualification Criteria:

| SN | Basic Requirement | Qualification Criteria | Supporting Documents | Scanned copy to be uploaded |
|---|---|---|---|---|
| **1.** | Legal Entity | A Company Registered under the Companies Act 1956/2013: OR A partnership firm registered under Indian Partnership Act, 1932/ LLP, 2008 Act Bidder should have a registered office in India and should be in existence for at least the last 10 years, | Bidder should submit copy of Certificate of Incorporation / Registration & Copy of PAN. | **PQ-1** |
| **2.** | Financial Turnover | The Average Annual Turnover (TO) for Bidder during last Three (3) Financial years i.e up to 31.03.2023 should not be less than 30% of the value of the work. | Certificate from the Statutory auditor/CA clearly specifying the annual turnover for the specified scope. | **PQ-2** |
| **3** | Financial: Net Worth & Profit Making | The Net Worth of the Bidder for last 3 years as on 31.03.2023 should be positive. | Annual Report with Balance Sheet& profit and Loss Account duly certified by CA. | **PQ-3** |
| **4** | Tax Registration and clearance | The Bidder, should be registered with the Tax Departments and carry a valid PAN/TAN Numbers and GST No. | Copy of the certificate of GST, PAN/TAN Number etc. | **PQ-4** |
| **5** | Certifications | Tenderer / Group Companies (Manufacturing Facility) shall have valid certificate for ISO 9001:2015 and ISO 20000. | Copy of a valid certificate. | **PQ-5** |
| **6** | Statutory Registration | EPF & ESIC payments | Copy of Registration Certificate & return for FY 22 | **PQ-6** |
| **7.** | Mandatory Undertaking | The Tenderer should: -<br>a. not be insolvent, in receivership, bankrupt or being wound up, not have its affairs administered by a court or a judicial officer, not have its business activities suspended and must not be the subject of legal proceedings for any of the foregoing reasons;<br>b. not have, and their directors and officers not have, been convicted of any criminal offence related to their | A Self Certificate as per Annexure-X: Declaration by Company Secretary or Director of the Board or Board resolution. | **PQ-7** |

| | | | | |
|---|---|---|---|---|
| | | professional conductor the making of false statements or misrepresentations as to their qualifications to enter into a procurement contract within a period of three years preceding the commencement of the procurement process, or not have been otherwise disqualified pursuant to debarment proceedings;<br>c. not have a conflict of interest in the procurement in question as specified in the Tender document.<br>**d. Undertaking to not submit any fraudulent information/ mis representation of facts/ concealment of data/information with regard to the bid requirement.** | | |
| **8.** | Technical Capability | The bidder should have experience of having successfully completed or substantially completed similar works i.e. Setting up and Maintenance of Centralized Integrated Water management System (CIWMS) based water supply or water distribution system consisting of CIWMS Software, IT Infrastructure, Field Instrumentation at multiple locations such as Flow Meters, Level Measuring Sensors, Flow Control Devices, Pressure monitoring & control devices, Sluice Valves & Valve Actuators, IoT Gateway/PLCs/RTU/RPU, Water Quality Sensors, Pump Monitoring Systems of WTPs along with interface of central monitoring and control form ICCC during the last seven years ending last day of month previous to the one in which bids are invited in any Smart City / Municipal Corporations / Utilities Department of State Government / Central Government /Govt. Authority / with documentary proof comprising of LoA / PO / Completion certificate) having cost of executed work should be either of the following: -<br>A) Three similar works each costing not less than 40% value of work<br>or<br>B) Two similar works each costing not less than 50% value of work | Documentary proof comprising of LoA / PO / Completion certificate) having cost of executed work from the customer/end user;<br>or<br>Work Order+ Substantially Completed Certificate from the customer along with payment made & Time schedule. | **PQ-8** |

| | | | | |
|---|---|---|---|---|
| | | or<br>C) One similar works each costing not less than 80% value of work. | | |
| 9. | Affidavit | The Tenderer shall submit a self-declaration for being not under legal action for corrupt or fraudulent practices (blacklisted) by any Ministry/Department of GoI/State/U.T Government/Government organizations. | A Self Declaration by Director/Company Secretary/ Board resolution as per Annexure enclosed. | **PQ-9** |
| 10. | Integrity Pact | Comply with the code of integrity of GMDA as specified in Bid document | Sign the integrity pact as per Annexure enclosed. | **PQ 10** |
| 11. | Letter of Authorization | The Tenderer shall submit Letter of Authorization signed by Managing Director or Board Resolution. | Original copy should be signed and notarized on a legal bond paper. | **PQ-11** |

**Note:**

1. The Agency/Tenderer shall comply with all applicable laws, including labor laws, at any point of time throughout the contract period.
2. The experience of the parent company / Group Companies of Bidder may be considered provided an undertaking is furnished by Authorized Signatory of parent/group company for fully supporting the bidder for successful implementation of the project.
3. The qualification of the sole Bidder / Lead Bidder & Consortium Partner in case of consortium shall be considered. The lead Bidder shall have min 50% valve of work & min 25% for Consortium Partner.
4. In addition to the provisions regarding the qualifications of the Tenderers as set out above the procuring entity shall disqualify a Tenderer as per the provisions under "Clause 4 in Section-IV: ITB" or any other inconsistency.
5. All the consortium partners shall be jointly and severally responsible for completion and handing over of project is working conditions to GMDA & AMC post handing over.
6. Consortium partners shall provide a certified copy of the consortium Agreement in demonstration of the partners undertaking joint and several liabilities for the performance of any contract entered into before award of work.

**OEM Criteria:**

a. The bidder may offer established reputed brands. viz, Siemens, Mitshubishi, Hitachi, Schneider Electric, Omicron, Krohne Marshall, Bermad, Dorot, E&H, Yokogawa Adept Fluidyne etc. For IoT Gateway/ Edge RTUs bidder may offer reputed brands viz Cisco, Cimcon, Schneider, Siemens etc. If the above OEM's don't have technical compliance with respect to tender specifications, bidder may propose the alternate vendor along with technical compliances as per bid document. All devices shall invariably be certified with concerned International or Indian quality standards specified in Bid document.

b. The tenderers shall submit only One make/model of each type of devices/equipment.

c. For the purposes of evaluation, Water System Infrastructure / SCADA Projects are defined as the project involving Supply, Installation, Testing and Commissioning of SCADA controlled water distribution system.

d. Any software license required in existing Data Centre environment to install SCADA Application must be arranged as part of the BoQ. Hardware to be provided by GMDA as indicated under Clause 5.6.2 / Section 4.

e. In case the documents/certificates/data sheets/MAF/test reports submitted by bidders is found to be non-compliant during the evaluation of bid, the corresponding bid shall be rejected.

f. GMDA may conduct physical site visit of factory premises of OEM to validate the proposed product specification and ascertain its compliance with the tender requirements.

g. GMDA reserves the right to conduct third party audit (TPA) of the supplied product by the bidder.

h. OEM will submit the MAF in the name of Lead Bidder for the proposed product in technical evaluation criteria on their letter head for Instruments, IoT Gateway and Certificate from ICCC OEM stating that necessary cost estimated is included for the integration, development, licensing etc. in the bidder scope. Copy of format enclosed.

i. Certificate shall be proposed during at the time of tender bid evaluation.

j. OEM will submit the datasheets along with line by line compliance as per the technical specifications for IoT Gateway and Instruments. The Third Part Test certificates can be provided at the time of award of work.

k. However, in order to ensure the seamless support each of the proposed OEMs should either have existing capability and infrastructure to provide 24x7x365 technical support in India, or should provide an undertaking that they would establish the requisite infrastructure and capability to provide 24x7x365 technical support in India within 60 days from the date of signing of the contract of their successful Agency/Bidder and proof of establishment should be provided after establishing the same.

l. The OEM for each product should not be banned/ blacklisted in India or Globally with any of the department because of security concerns.

m. OEM must have ISO 9001:2015 Certification.

n. Certification: In case the certificate is applied for, a copy of the same shall be submitted before issue of LoA.

o. The OEM for each products or technology quoted should be in the business of that product or solution or technology in India for at least 5 years as on the date of release of the Bid document.

p. All the OEMs should have Direct presence in India and not through channel partners before the date of submission of bid.

q. The OEM for all components should give a declaration that products or technology quoted are neither end of- sale nor end-of-life till 12 months from the date of bidding and are not end-of-support till 07 years from the due date of bidding.

r. Bidder must quote products in accordance with above clause “Eligible goods and related services”.

s. Supplied products/suppliers shall be governed by Govt. Order No.02/09/2020-4IB-II dated 10.12.2020 (eprocure.gov.in). Restriction in Public procurement from bidders & OEMs of certain Countries: -The restriction on procurement from bidders/OEMs from a Country or Countries on grounds of Defense of India or matters directly or indirectly related thereto including National Security.

**4.6** Bidders who meet the minimum qualification criteria will be qualified only if their available bid capacity for construction work is equal to or more than the total bid value. The available bid capacity will be calculated as under:

Assessed Available Bid Capacity = (A*N*2- B)

Where

A = Maximum value of financial turnover (as certified by the Charted Accountant) in any one year during the last three years (updated to price level of the last financial year at the rate of 8% per year compounded yearly).

N = Number of years prescribed for completion of the works for which bids are invited (period up to 6 months to be taken as ½ and more than 6 months as 1 in a year).

B = Value, at the current price level (compounded yearly @8% per year), of existing commitments and on-going works to be completed during the period of completion of the works for which bids are invited.

**4.7** Even though the bidders meet the above qualifying criteria, they are subject to bedisqualified if they have:

(i) made misleading or false representations in the forms, statements, affidavits andattachments submitted in proof of the qualification requirements; and/or

**5. One Bid per Bidder**

**5.1** Each Bidder shall submit only one Bid for one work. A Bidder who submits more than one Bid for one work will cause the proposals with the Bidder's participation to be disqualified.

**6. Cost of Bidding**

**6.1** The Bidder shall bear all costs associated with the preparation and submission of his Bid, and the Employer will, in no case, be responsible or liable for those costs.

**7. Site Visit**

**7.1** The Bidder, at the Bidder's own responsibility and risk is encouraged to visit and examine the Site of Works and its surroundings and obtain all information that may be necessary for preparing the Bid and entering into a contract for construction of the Works. Thecosts of visiting the Site shall be at the Bidder's own expense. The Bidder acknowledges that prior to the submission of the bid, the Bidder/Contractor has, after a complete and careful examination, made an independent evaluation of the Scope of the Project, Specifications and Standards of design, construction and maintenance, Site, local conditions, physical qualities ofground, subsoil and geology, suitability and availability of access routes to the Site and all information provided by the Employer or obtained, procured or gathered otherwise, and has determined to its satisfaction the accuracy or otherwise thereof and the nature and extent of difficulties, risks and hazards as are likely to arise or may be faced by it in the course of performance of its obligations hereunder. The Employer makes no representation whatsoever, express, implicit or otherwise, regarding the accuracy, adequacy, correctness, reliability and/or completeness of any assessment assumptions, statement or information provided by it and the Bidder confirms that it shall have no claim whatsoever against the Employer in this regard.

## B. BIDDING DOCUMENTS

### 8. Content of Bidding Documents

**8.1** The set of bidding documents comprises the documents listed below and addenda issuedin accordance with Clause 10 of ITB.

1. Detail Notice Inviting Tender
2. Instructions to Bidders including Appendix to bid
3. Qualification Information and other forms
4. Conditions of Contract

   (Part I General Conditions of Contract, and Contract Data; Part II Special Conditions of Contract)

5 Technical Specifications

6 Drawings

7 Bill of Quantities

8 Form of Acceptance, Form of Agreement, Issue of Notice to Proceed with the Work,

9 Forms of Securities and Form of Unconditional Bank Guarantee.

**8.2** The bidder is expected to examine carefully all instructions, conditions of contract, contract data, forms, terms and specifications, bill of quantities, forms and drawings in the Bid Document. Failure to comply with the requirements of Bid Documents shall be at the bidder's own risk. Pursuant to clause 25 hereof, bids, which are not substantially responsive to the requirements of the Bid Documents, shall be rejected.

### 9. Clarification of Bidding Documents and Pre-bid Meeting

**9.1** A prospective bidder requiring any clarification of the bidding documents may notify the Employer in writing or through email at the Employer's address indicated in the invitation to bid. The Employer will respond to any request for clarification which he receives earlier than 10 days prior to the deadline for submission of bids. Copies of the Employer's response will be put on website including a description of the enquiry but without identifying its source.

**9.2** If a pre-bid meeting is to be held, the bidder or his authorized representative is invited to attend it. Its date, time and address are given in the Appendix to ITB: **Bidder to submit pre-bid queries through email.**

**9.3** The purpose of the meeting will be to clarify issues and to answer questions on any matter that may be raised at that stage.

**9.4** Minutes of the meeting, including the text of the questions raised (without identifying the source of the enquiry) and the responses given will be uploaded for information of the public or other bidders. Any modifications of the bidding documents listed in Clause 8.1 of ITB, which may become necessary as a result of the pre-bid meeting shall be made by the Employer exclusively through the issue of an Addendum pursuant to Clause 10 of ITB and not through the minutes of the pre-bid meeting.

**9.5** Non-attendance at the pre-bid meeting will not be a cause for disqualification of a bidder.

## 10. Amendment of Bidding Documents

**10.1** Before the deadline for submission of bids, the Employer may modify the bidding documents by issuing corrigendum.

**10.2** Any addendum/corrigendum thus issued shall be part of the bidding documents and put on website only and shall be deemed to have been communicated to all the bidders. The Employer will assume no responsibility in this regard.

**10.3** To give prospective bidders reasonable time in which to take an addendum into account in preparing their bids, the Employer shall extend, as necessary, the deadline for submission of bids, in accordance with Clause 20.2 of ITB.

## C. PREPARATION OF BIDS

**11. Language of Bid**

**11.1** All documents relating to the Bid shall be in **English** language.

**12. Documents Comprising the Bid**

**12.1** The Bid submitted by the Bidder shall be in two separate parts:

**Part I Technical bid.** This shall be named Technical Qualification Part of Bid and shallcomprise of:

i) The cost of the bidding documents.
ii) The Earnest money in any of the forms as specified in clause 16.2 of ITB orEarnest Money declaration form specified in Section-7 as applicable.
iii) Authorized address and contact details of the Bidder having the followinginformation:
a) Address of communication:
Telephone No.(s):
Office: Mobile No.:
b) Facsimile (FAX) No.:
c) Electronic Mail Identification (E-mail ID):

iv) Qualification information, supporting documents as specified in ITB.
v) Any other information/documents required to be completed and submitted bybidders, as specified in the Appendix to ITB, and
vi) Scanned copy of the affidavit (on the format given in Section 7 of biddocument).

**Part II. Financial Bid: -** It shall be named Financial Bid and shall comprise of:

(i) Priced bill of quantities for items specified in Section 6;

**12.2** The following documents, which are not submitted with the bid, will be deemed to bepart of the bid.

| Section | Particulars |
|---|---|
| 1 | Detail Notice Inviting Tender |
| 2 | Instructions to Bidders |
| 3. | Conditions of Contract |
| 4. | Contract Data |
| 5. | Technical Specifications |
| 6. | Drawings |

**13. Bid Prices**

**13.1** The Contract shall be for the whole Works, as described in Clause 1.1 of ITB, basedon the priced Bill of Quantities submitted by the Bidder.

**13.2** For item rate tenders, the bidder shall fill in item rate at its appropriate place in figures. Items for which no rate or price is entered by the bidder will not be paid for by theemployer and considered as nil.

***13.3*** For percentage rate tender, the bidder shall make its due diligence and quote a single percentage above or below HSR items including any premium if applicable andindividual rate for NS items which are in the BOQ but not in HSR. NS *Items in theBOQ, for which no rate or price is entered by the bidder will not be paid for by theEmployer and considered as nil rate items.*

***13.4*** All duties, taxes, royalties and other levies payable by the Contractor under the Contract, or for any other cause, shall be included in the rates, prices, and total Bid price submitted by the Bidder online.

The rates and prices quoted by the bidder are subject to adjustment during the performance of the Contract in accordance with the provision of Clause 42 A of the Conditions of Contract.

## 14. Currencies of Bid

**14.1** The unit rates and the prices shall be quoted by the bidder entirely in Indian Rupees.

## 15. Bid Validity

**15.1** Online Bids shall remain valid for a period of not less than 120 days after the deadline date for bid submission specified in ITB. A bid valid for a shorter period shall be rejected by the Employer as non-responsive.

**15.2** In exceptional circumstances, prior to expiry of the original time limit, the Employer may request that the bidders may extend the period of validity for a specified additional period. The request and the bidders' responses shall be made in writing or by email. A bidder may refuse the request without forfeiting his Earnest money. A bidder agreeing to the request will not be required or permitted to modify his bid, but will be required to extend the validity of his Earnest money for a period of the extension, and in compliance with Clause 16 of ITB in all respects.

## 16. Earnest money and Earnest money declaration Form

**16.1** The bidder shall furnish as part of his bid, Earnest money for the amount for this particular work through online payment on the portal.

16.2 Not applicable.

16.3 Any bid not accompanied by an acceptable Earnest Money as indicated in Clause 16.1 shall be rejected by the employer as non-responsive.
16.4 Not applicable.

16.5 Not applicable.

**16.6 The successful bidder shall be liable for forfeiture of his/its Earnest money amount and further barred from participation in future bidding for a period of 2 Years, in case of failure to submit the Performance Bank Guarantee as per Clause 34 of this document.**

## 17. Alternative Proposals by Bidders

**17.1** Bidders shall submit offers that comply with the requirements of the bidding documents, including the Bill of Quantities and the basic technical design as indicated in the drawings and specifications. Conditional offer or alternative proposals will be rejected as non-responsive.

## D. ONLINE SUBMISSION OF BIDS

### 18. Bidding through E-Tendering System

Instructions to bidder on Electronic Tendering System

These conditions will over-rule the conditions stated in the tender documents, wherever relevant and applicable.

### 18.1 Registration of bidders on eProcurement Portal: -

All the bidders intending to participate in the tenders processed online are required to get registered on the centralized e - Procurement Portal i.e. https://etenders.hry.nic.in. Please visit the website for more details.

### 18.2 Obtaining a Digital Certificate:

**19.** **2.1** The Bids submitted online should be encrypted and signed electronically with a Digital Certificate to establish the identity of the bidder bidding online. These Digital Certificates are issued by an Approved Certifying Authority, by the Controller of Certifying Authorities, Government of India.

**19.2.2** A Digital Certificate is issued upon receipt of mandatory identity (i.e. Applicant's PANCard) and Address proofs and verification form duly attested by the Bank Manager / Post Master / Gazetted Officer. Only upon the receipt of the required documents, a digital certificatecan be issued. For more details please visit the website – https://etenders.hry.nic.in.

**19.2.3** The bidders may obtain Class-II or III digital signature certificate from any Certifying Authority or Sub-certifying Authority authorized by the Controller of Certifying Authorities or may obtain information and application format and documents required for the issue of digital certificate from the authority.

**19.2.4** The bidder must ensure that he/she comply by the online available important guidelines at the portal https://etenders.hry.nic.in for Digital Signature Certificate (DSC) including the e- Token carrying DSCs.

**19.2.5** Bid for a particular tender must be submitted online using the digital certificate (Encryption & Signing), which is used to encrypt and sign the data during the stage of bid preparation. In case, during the process of a particular tender, the user loses his digital certificate (due to virus attack, hardware problem, operating system or any other problem) he will not be able to submit the bid online.

Hence, the users are advised to keep a backup of the certificate and also keep the copies at safeplace under proper security (for its use in case of emergencies).

**19.2.6** In case of online tendering, if the digital certificate issued to the authorized user of a firm is used for signing and submitting a bid, it will be considered equivalent to a no-objection certificate/power of attorney /lawful authorization to that User. The firm has to authorize a specific individual through an authorization certificate signed by all partners to use the digital certificate as per Indian Information Technology Act 2000. Unless the certificates are revoked, it will be assumed to represent adequate authority of the user to bid on behalf of the firm in the department tenders as per Information Technology Act 2000. The digital signature of this authorized user will be binding on the firm.

**19.2.7** In case of any change in the authorization, it shall be the responsibility of management / partners of the firm to inform the certifying authority about the change and to obtain the digital signatures of the new person / user on behalf of the firm / company. The procedure for application of a digital certificate however will remain the same for the new user.

**19.2.8** The same procedure holds true for the authorized users in a private/Public limited company. In this case, the authorization certificate will have to be signed by the directors ofthe company.

### 18.3 Pre-requisites for online bidding:

In order to bid online on the portal http://etenders.hry.nic.in, the user machine must be updated with the latest Java & DC setup. The link for downloading latest java applet & DC setup are available on the Home page of the e-tendering Portal.

### 18.4 Online Viewing of Detailed Notice Inviting Tenders:

The bidders can view the detailed N.I.T and the time schedule (Key Dates) for all the tenders floated through the single portal e-Tender system on the Home Page at http://etenders.hry.nic.in

### 18.5 Download of Tender Documents:

**The tender documents can be downloaded free of cost from the e-Tender portal http://etenders.hry.nic.in**

### 18.6 Key Dates:

The bidders are strictly advised to follow dates and times as indicated in the online Notice Inviting Tenders. The date and time shall be binding on all bidders. All online activities are time tracked and the system enforces time locks that ensure that no activity or transaction can take place outside the start and end dates and the time of the stage as defined in the online Notice Inviting Tenders.

### 18.7 Online Payment of eService fee & Bid Preparation & Submission (PQQ/ Technical& Commercial/Price Bid):

#### i) Online Payment e-Service fee:

The online payment for eService fee can be done using the secure electronic payment gateway by bidders/ Vendors online directly through Debit Cards & Internet Banking Accounts. The secure electronic payments gateway is an online interface between contractors and Debit card / online payment authorization networks.

#### ii) PREPARATION & SUBMISSION Of online APPLICATIONS/BIDS:

Detailed Tender documents may be downloaded from e-Tenders website (http://etenders.hry.nic.in) and tender mandatorily be submitted online.
Scan copy of Documents to be submitted/uploaded for Prequalification or Technical bid underonline. The required documents (refer to DNIT) shall be prepared and scanned in different file formats (in PDF

/JPEG/MS WORD format such that file size is not exceed more than 10 MB) and uploaded during the on-line submission of Technical Bid.
FINANCIAL or Price Bid PROPOSAL shall be submitted mandatorily online in the Excel Format.

**18.8 ASSISTANCE TO THE BIDDERS: -**

In case of any query regarding process of e-tenders and for undertaking training purpose, the intended bidder can also avail the following and can contact service provider as per below:

Office Timings of Help-desk support for Single e-Tender Portal of Government of Haryana- Technical Support Assistance will be available over telephone Monday to Friday (09:00 am. To 5:00 pm) 0172-2700275 also contact to help desk team of Delhi (24 x 7) as given below
0120-4001002
0120-4200462
0120-4001005
0120-6277787
All queries would require to be registered at our official email support as under (only those queries which are sent through email along with appropriate screen shots or error description will be considered as registered with the Help-desk)

**(a)** Technical: – Support e proc (at) nic (dot) in

**(b)** Policy Related: - cppp-doc(at) nic (dot) in

**Important Note: -**

(a) Any intending bidder can contact the helpdesk on or before prior to 4 hours of the scheduled closing date & time of respective e-Auction/Tender event.

(b) For queries pertaining to e-Payment, please contact the help desk atleast 2 business days priorto the closing date& time of e-Auction/Tender event.

(c) Help-desk support will remain closed during lunch break i.e. from 1:30 PM upto 2:15 PM on each working day.

**Schedule for Training**

Haryana e-Tender Help Desk Office will remain closed on Saturday, Sunday and NationalHolidays.

**NOTE: -** Bidders participating in online tenders shall check the validity of his/her Digital Signature Certificate before participating in the online Tenders at the portal http://etenders.hry.nic.in.

For help manual please refer to the 'Home Page' of the e-Tender website at https://etenders.hry.nic.in and click on the available link 'How to ...? to download the file.

**20. Deadline for Submission of Bids**

**20.1** Complete Bids in two parts as per clause 19 above must be submitted by the Bidder online not later than the date and time indicated in the Appendix to ITB.

**20.2** The Employer may extend the deadline for submission of bids by issuing an amendment in accordance with Clause 10.3 of ITB. In such case all rights and obligations of the Employer and the bidders previously subject to the original deadline will then be subject tothe new deadline.

**21. Late Bids**

**21.1** Any Bid received by the Employer after the deadline prescribed in Clause 20 willbe returned unopened to the bidder.

**21.2.** Clause Deleted.

**21.3** No bid shall be modified or withdrawn after the deadline of submission of bids.

**22.** Withdrawal or modification of a bid between the deadline for submission of bids and the expiration of the original period of bid validity specified in clause 15.1 above or as extended pursuant to Clause 15.2 may result in the forfeiture of the Earnest money pursuant to Clause 16 or invite action as per Earnest Money declaration undertaking.

## E. Bid Opening and Evaluation

### 23. Bid Opening

**23.1** The Employer inviting the bids or its authorized representative will open the bids online in the presence of the bidders or their representatives who choose to attend at time, dateand the place specified in Appendix to ITB.

**23.2** In the event of the specified date for the Opening of bids being declared a holiday for the Employer, the Bids will be opened at the appointed time and location on the next working day.

**23.3** The file containing the Part-I of the bid will be opened first.

**23.4** The amount, form and validity of the cost of bidding document and earnest money furnished with each bid will be announced. If the cost of bidding document and earnest moneyfurnished does not conform to the amount and validity period as specified in the Invitation for Bid, and has not been furnished in the form specified in Clause 16, the remaining technical bidwill not be opened and will be disqualified for opening of financial bid. Similarly, for registered bidders, bid not accompanied by the Earnest Money declaration form, shall be rejected and technical bid not be opened.

**23.5** The Employer will also prepare minutes of the Bid opening, including the information disclosed in accordance with Clause 23.4 of ITB.

**23.6**

**(i)** Subject to confirmation of the earnest money, the bids accompanied with valid earnest money/earnest money declaration form will be taken up for evaluation with respect to the Qualification Information and other information furnished in Part I of the bid pursuant to Clause 12.1.

**(ii)** The technical bid will be evaluated on the basis of the documents submitted online by the bidder and no modification of his technical bid will be sought from the bidder. No cognizance of the documents submitted subsequently by the bidder on his own regarding his technical bid shall be taken. However, clarification can be sought upto the extent of clearing any doubt the documents already submitted online.

The Technical solution of the tenderers shall be evaluated for compliance to technical specifications. The Tenderer is also required to give Make and Model no. of Equipment proposed along with its specifications (data sheets) and parawise compliance to technical specifications. No major deviations shall be accepted. The offer with non-compliant equipment shall not be considered & their financial bids shall not be opened.

**(iii)** The bidders will respond in not more than 7 days of issue of the clarification letter, which will also indicate the date, time and venue of opening of the Financial Bid.

**(iv)** Immediately, on receipt of these clarifications the Evaluation Committee will finalize the list of responsive bidders whose financial bids are eligible for consideration.

**23.7** The Employer shall hoist the result of technical evaluation of bids alongwith the reasons for rejection of Part-I of the bid (Technical bid) on the website. Thereafter, the employer shall wait for 7 days before opening the financial bid of the qualified bidders so as to give the disqualified bidders and opportunity to avail, if they so desire, any remedy available under the Law.

**23.8** Part II (Financial Bid) of bids of only those bidders will be opened online, who have qualified in Part I of the bid. The bidders' names, the Bid prices, the total amount of each bid, and such other details as the Employer may consider appropriate will be notified by the Employer at the time of bid opening.

**23.9** The Employer shall prepare the minutes of the online opening of Part-II of the Bids.

## 24 Process to be Confidential

Information relating to the examination, clarification, evaluation, and comparison of bids and recommendations for the award of a contract shall not be disclosed to bidders or any other persons not officially concerned with such process until the award to the successful Bidder has been announced. Any attempt by a Bidder to influence the Employer's processing of bids or award decisions may result in the rejection of his Bid.

## 25 Clarification of Bids and Contacting the Employer

**25.1** No Bidder shall contact the Employer on any matter relating to its bid from the time of the bid opening to the time the contract is awarded **except as specified in clause 25.3 here under.** If the bidder wishes to bring additional information to the notice of the Employer, it should do so in writing.

**25.2** Any attempt by the bidder to influence the Employer's bid evaluation, bid comparison or contract award decision may result in the rejection of his bid.

**25.3** To assist in the examination, evaluation, and comparison of Bids, the Employer may, at his discretion, ask any Bidder for clarification of his Bid, including breakdowns of unit rates. The request for clarification and the response shall be in writing or by email, but no change in the price or substance of the Bid shall be sought, offered, or permitted.

## 26. Examination of Bids and Determination of Responsiveness

**26.1** During the detailed evaluation of "Part-I of Bids", the Employer will determinewhether each Bid

(a) meets the eligibility criteria defined in Clauses 3 and 4;
(b) has been properly signed;
(c) is accompanied by the required securities; and
(d) is substantially responsive to the requirements of the bidding documents and
(e) Meets the functional and technical requirements of the bidding document.

(f) i) Technical solution of the tenders meeting the evaluation criteria shall be evaluated for compliance to Technical specifications. The tender is required to give Make & Model no. of equipment along with its specification and parawise compliance to tendered specifications. No major deviation shall be accepted. The offer with non-compliant equipment shall not be considered and their financial bids shall not be opened.

ii) The equipment proposed shall be successfully working in field for atleast one year in India atleast at 10% of tendered locations.

During the detailed evaluation of the "Part-II of Bids", the responsiveness of the bids will be further determined with respect to the remaining bid conditions, i.e., priced bill of quantities.

**26.2** A substantially responsive "Financial Bid" is one which conforms to all the terms, conditions, and specifications of the bidding documents, without material deviation or reservation. A material deviation or reservation is one

(a) which affects in any substantial way the scope, quality, or performance of theWorks;

(b) which limits in any substantial way, inconsistent with the bidding documents, theEmployer's rights or the Bidder's obligations under the Contract; or

(c) whose rectification would affect unfairly the competitive position of other bidderspresenting substantially responsive bids.

**26.3** If a Bid is not substantially responsive, it will be rejected by the Employer, and may not subsequently be made responsive by correction or withdrawal of the non-conforming deviation or reservation.

**27. Correction of Errors.**

**27.1.** "Financial Bids" determined to be substantially responsive will be checked by the 'Employer' for any errors. Errors will be corrected by the Employer as follows:

(a) Where there is a discrepancy between the unit rate and the line item total resulting from multiplying the unit rate by the quantity, the unit rate as quoted shall be taken into account in BOQ, from that in HSR, the unit mentioned in HSR shall prevail and the total resulting from multiplying the quoted rate by the quantity, shall be taken in to account.

(b) Where there is discrepancy between the rates in figure and in words, the rate in words shall be taken into account.

**27.2.** The amount stated in the "Financial Bid" will be corrected by the Employer in accordance with the above procedure and the bid amount adjusted in the following manner.

(a) If the Bid price increases as a result of these corrections, the amount as stated in the bid will be the 'bid price' and the increase will be treated as rebate;

(b) If the bid price decreases as a result of the corrections, the decreased amount will be treated as the 'bid price'.

**28.** Adjusted in bid price pursuant to clause 27 above, shall be considered as binding upon the Bidder. If the Bidder does not accept the corrected amount the Bid will be rejected, and action as per provisions of Earnest Money Declaration Form shall be initiated or Earnest Money shall be encashed as applicable**.**

**29. Evaluation and Comparison of Bids:**

**29.1** The Employer will evaluate and compare only the bids determined to be substantially responsive in accordance with Clause 26 of ITB and marks obtained as per Table under Section 5 of the Bid document. Bidders who have scored 70 marks or above shall be considered for opening pf Financial bid.

**29.2** In evaluating the Bids, the Employer will determine for each Bid the evaluated Bid Price by adjusting the Bid Price as follows:

29.2.1 adjustments to reflect discounts or other price offered in Financial bid submitted online.

**29.3** If the Bid of the successful Bidder is seriously unbalanced in relation to the Engineer's estimate of the cost of work to be performed under the contract, the Employer may require the Bidder to produce detailed price analysis for any or all items of the Bill of Quantities, to demonstrate the internal consistency of those prices. After evaluation of the price analysis, the Employer may require that the amount of the Performance Security set forthin Clause 30 of ITB be increased at the expense of the successful Bidder to a level sufficient toprotect the Employer against financial loss in the event of default

of the successful Bidder under the Contract. The amount of the increased Performance Security shall be decided at the sole discretion of the Employer, which shall be final, binding and conclusive on the bidder. The amount of additional performance security shall be equal to an amount arrived at as below: -

(i) If the Bid price offered by the contractor is negatively unbalanced upto the 10% of the estimated project cost (as per analytical rates / N.S. rates).
In such cases no additional performance security shall be taken from the successfulbidder;

(ii) If the bid price offered by the contractor is negatively unbalanced below 10% and upto 20% of the estimated project cost (as per analytical rates / N.S. Rates): -

In such case, Additional performance security shall be calculated @ 20% of the {(% below quoted by the contractor – 10%) of the estimated cost of the project};

(iii) If the bid price offered by the contractor is further negatively unbalanced below 20% of the estimated project cost (as per analytical rates / N.S. Rates): -

In such case, the Additional performance security shall be calculated @ 30% of the {(% below quoted by the contractor – 10%) of the estimated cost of the project};

(iv) 20% of the total unbalanced amount of all the seriously unbalanced items (i.e. unbalanced by more than 40% of the estimated amount of that particular item/items).

Out of (i), (ii), (iii) and (iv) above Whichever is higher is to be deposited by thesuccessful bidder.

**29.4** Validity of above Additional performance Security shall be valid until a date 28 days from the date of issue of the certificate of completion.

**29.5** The Employer reserves the right to accept or reject any variation or deviation. Variations and deviations and other factors, which are in excess of the requirements of the Bidding documents or otherwise result in unsolicited benefits for the Employer, shall not be taken into account in Bid evaluation.

**29.6** The estimated effect of the price adjustment conditions under Clause 47 of the *Conditions of Contract*, during the period of implementation of the Contract, will not be taken into account in Bid evaluation.

30 The agency/Bidder to whom the work is allotted shall be paid lowest of the following in the running/final bills.

i) Amount calculated with the accepted rates of lowest agency.

ii) Amount worked out with the accepted percentage above/below HSR+CP/analytical rates/ NS item rates, worked out in financial statement. Financial statement will be made a part of agreement.

# F. AWARD OF CONTRACT

## 31 Award Criteria

**31.2** Subject to Clause 32 of ITB, the Employer will award the Contract to the Bidder whose Bid has been determined:

(i) To be substantially responsive to the bidding documents and who has offered the lowest evaluated Bid price and

(ii) To be within the available bid capacity adjusted to account for his bid price which is evaluated the lowest in any of the packages opened earlier than the one under consideration. In no case, the contract shall be awarded to any bidder whose available bid capacity is less than the evaluated bid.

## 32 Employer's Right to Accept any Bid and to Reject any or all Bids

**32.2** Notwithstanding Clause 31 above, the Employer reserves the right to accept or reject any Bid, and to cancel the bidding process and reject all bids, at any time prior to the award ofContract, without thereby incurring any liability to the affected Bidder or bidders or any obligation to inform the affected Bidder or bidders of the grounds for the Employer's action.

## 33 Notification of Award and Signing of Agreement

**33.2** The bidder whose Bid has been accepted will be notified of the award by the Employerprior to expiration of the Bid validity period by email confirmed by registered letter. This letter (hereinafter and in the Part I *General Conditions of Contract* called the "Letter of Acceptance") will state the sum that the Employer will pay to the Contractor in consideration of the execution, completion and maintenance of the works, by the Contractor during defect liability period as prescribed by the Contract (hereinafter and in the Contract called the "Contract Price").

**33.3** The notification of award will constitute the formation of the Contract, subject only to the furnishing of a Performance Security in accordance with the provisions of Clause 34.

**33.4** The Agreement will incorporate all agreements between the Employer and the successful Bidder. It will be signed by the Employer and the successful Bidder after the Performance Bank Security is furnished.

**33.5** Upon the furnishing by the successful Bidder of the Performance Security, the Employer will promptly notify the other Bidders that their Bids have been unsuccessful.

**33.6** Upon the furnishing by the successful Bidder of the Performance Security, the Employer shall issue the letter to proceed with the work.

**33.7** If the lowest tenderer (L-1) backs out, his earnest money shall be forfeited or action as per conditions of Bid Security Declaration Form shall be initiated. The agency will be de- barred for giving tenders for two year and the second lowest tenderer (L-2), third lowest

tenderer (L-3) in order of sequence, may be called upon to bring his offer to the same level as the originally first lowest tenderer. In the event of their refusal to do so, tenders shall be recalled. In case of great urgency, authority competent to accept the tender may authorize call of limited or short notice tenders.

**34 Performance Security**

**34.1.a)** Within 15 days of receipt of the Letter of Acceptance, the successful Bidder shall deliver to the Employer a Performance Security in any of the forms given below for an amountequivalent to 3% of the Contract price plus additional security for unbalanced Bids in accordance with Clause 29.3 of ITB and Conditions of Contract:

A Bank Guarantee in the form given in Section 7/FDR in the name of Executive Engineer concerned. Performance bank guarantee shall be valid until a date 45 days after the expiry of Defect Liability-cum-Maintenance Period.

**b)** As per Haryana Govt. Co-operation Department Notification No. 8366-C-7- 2016/13818 dated 08.12.2016, the performance security for Co-operative Labour and Construction Societies shall be half of the performance security applicable to contractors for works upto any value. In case of the Cooperative Labour and Construction Societies consistingof all women members or all SC members the performance security will be 25% of the performance security applicable to contractor.`

**34.2** If the performance security is provided by the successful Bidder in the form of a Bank Guarantee/FDR, it shall be issued either (a) at the Bidder's option, by a Nationalized/Scheduled Indian Bank or (b) by a foreign bank located in India and acceptable to the Employer**.**

**34.3** Failure of the successful Bidder to comply with the requirements of Sub-Clause 34.1 shall constitute sufficient grounds for cancellation of the award and forfeiture of the Earnest money/action due as per Earnest Money declaration. The bidder shall also be debarred for period of 2 year from participation in tenders in any of the Departments/Boards/Corporations etc. of Haryana Government. If the work of is an urgent nature and cannot brook delay involved in re-tendering, the remaining tenderers shall be offered the lowest approved rates. If more than one tenderer turns up, then preferences shall be given to the tenderer graded according to the rates quoted in the first instance.

**34.4** Whenever there is an addition to the contract price due to change in scope or variations,the Performance Security shall be increased by an equal percentage. The contractor shall deliver Performance Security within 21 days of receipt of request in this regard from the employer.

**35 Advances**

The Employer will provide Advances as stipulated in the conditions of contract, subject to maximum amount, as stated in the Contract Data.

**36 Corrupt or Fraudulent Practices**

**36.2** The 'Employer' will reject a proposal for award if it determines that the Bidder recommended for award has engaged in corrupt or fraudulent practices in competing for the contract in question and will declare the firm ineligible, either indefinitely or for a stated period of time; to be awarded a contract by Haryana Government in any of Departments/Boards/Corporations etc.

**36.3** The successful bidder shall be required to sign an **Integrity Pact** as provided in Section 7.

**36.4** The Employer requires the Bidders/Contractors to strictly observe the laws against fraud and corruption in force in India, namely, Prevention of Corruption Act, 1988.

## 37 Debarring

If a registered but unverified bidder submits Financial Bid online but he/it fails to submit the Earnest Money instruments in physical form by 5:00 pm with the GMDA on the last date of submission of this tender, he / it shall be blacklisted for participation in the bidding in all future tenders floated by any of Department/Boards/Corporations etc. of Government of Haryana, for a period of 2 years.

## 38 Completion of work

The agency to whom the work is allotted shall complete the entire work as per Functional & Technical Specifications, drawings irrespective of quantities in the DNIT. The agency is bound to consult the Functional & Technical Specifications, drawings before tendering and tender the work accordingly.

***Note: - After Clause 38 of ITB, any of the tendering Departments may include one or moreclauses in the ITB as per specific requirement of the department/work.***

**Appendix to ITB**

**Instructions to Bidders**

**Clause Reference**

| | |
|---|---|
| (1.1) | The Works is **"Supply, Installation, Integration and Commissioning of Centralized Integrated Water Management System (CIWMS).** |
| (1.1) | The Jurisdiction of court is Gurugram, Haryana. |
| (4.5 A) (i) | Minimum average annual financial turnover (as certified by the Charted Accountant) during the last three years, ending 31st March of the previous financial year, should not be less than 30% of the value of work. The turn over shall be updated to price level of the last financial year at the rate of 8% per year compounded yearly. |
| (4.5A) (ii) | **Value of work is as under:**<br>Three similar works each costing not less than 40% of value of work<br>Or<br>Two similar works each costing not less than 50% of value of work<br>Or<br>One similar works each costing not less than 80% of value of work |
| (7.1) | The contact person is Advisor, Smart City, GMDA<br>Address: GMDA, Plot No. 3, Sector 44, Gurugram<br>Telephone No:0124-2746633 |
| (9.2) | Place, Time and Date for pre-bid meeting are<br><br>Place: - GMDA, Plot No. 3, Sector 44, Gurugram<br>Time: - 11:30 am.<br>Date: - 19.12.2023 |

Smart City Division
Phone No: 0124-2746633
Email: adv.gmda@gov.in

**Section-2**

**Qualification Information**

| **Notes on Form of Qualification Information** |
|---|
| The information to be filled in by bidders in the following pages will be used for purposes of post-qualification as provided for in Clause 4 of the Instructions to Bidders. This information will not be incorporated in the Contract. Attach additional pages as necessary. |

| | | |
|---|---|---|
| **1.** | **Individual Bidders** | |
| **1.1** | Constitution or legal status of Bidder<br><br>Place of registration: | *[attach copy]* |
| | Principal place of business: | |
| | Power of attorney of signatory of Bid (if required) | *[attach]* |
| **1.2** | Total annual financial turnover of each of the last three year duly certified by Chartered Accountant | (Rs. In lacs)<br>Year _____<br>Year _____<br>Year _____ |

**Note: Bidder should have a registered office in India and should be in existence for at least 10 Years, Bidder should submit copy of Certificate of Incorporation / Registration & Copy of PAN.**

**1.2.1** Work performed as prime Contractor (in the same name and style) on construction works of a similar nature and volume over the last Five years. Attach certificate from the Engineer-in-charge.

| Project Name | Name of Employer | Description of work | Value of contract | Contract No. | Date of Issue of Work Order | Stipulated date of completion | Actual Date of Completion | Remarks explaining reasons for delay, if any |
|---|---|---|---|---|---|---|---|---|
| | | | | | | | | |

**1.2.2** Work performed as Sub-Contractor (in the same name and style) on construction works of a similar nature and volume over the last Five years. Attach certificate from Principal Employer (Main Client).

| Project Name | Name of Employer | Description of work | Value of contract | Contract No. | Date of Issue of Work Order | Stipulated date of completion | Actual Date of Completion | Remarks explaining reasons for delay, if any |
|---|---|---|---|---|---|---|---|---|
| | | | | | | | | |

**1.2.3** Information on Bid Capacity (works for which bids have been submitted and workswhich are ongoing and yet to be completed) as on the date of this bid.

**Existing commitments and on-going construction works:**

| Description of Work | Place & State | Contract No & Date | Name & Address Of Employer | Value of Contract (Rs. In lacs) | Stipulated period of completion | Value of works remaining to be completed (Rs. Lacs) * | Anticipated Date of completion |
|---|---|---|---|---|---|---|---|
| (1) | (2) | (3) | (4) | (5) | (6) | (7) | (8) |
| | | | | | | | |

**1.3.3 (A) Works for which bids already submitted:**

| Description of works | Place & State | Name & Address of Employer | Estimated value of works (Rs. in lacs) | Stipulated period of completion | Date when decision is expected | Remarks, if any |
|---|---|---|---|---|---|---|
| 1 | 2 | 3 | 4 | 5 | 6 | 7 |
| | | | | | | |

**Note:- Here, any of the departments may specify the quantities of the work executed bythe bidder.**

**Section 3**
**Conditions of Contract**
**Table of Contents**


| A. | General | D. | Cost Control |
|---|---|---|---|
| 1 | Definitions | 34 | Bill of Quantities |
| 2 | Interpretation | 35 | Variations |
| 3 | Language and Law | 37 | Payments for Variations |
| 4 | Engineer's Decisions | 38 | Cash Flow Forecasts |
| 5 | Delegation | 39 | Payment Certificates |
| 6 | Communications | 40 | Payments |
| 7 | Subcontracting | 44 | Compensation Events |
| 8 | Other Contractors | 45 | Tax |
| 9 | Personnel | 46 | Currencies |
| 10 | Employer's and Contractor's Risks | 47 | Price Adjustment |
| 11 | Employer's Risks | 48 | Retention Money |
| 12 | Contractor's Risks | 49 | Liquidated Damages |
| 13 | Insurance | 50 | Advance Payment |
| 14 | Site Investigation Reports | 51 | Securities |
| 15 | Queries about the Contract Data | 52 | Cost of Repairs |
| 16 | Contractor to Construct the Works and do maintenance | E. | **Finishing the Contract** |
| 17 | The Works to Be Completed by the Intended Completion Date | 53 | Completion of Construction and Maintenance |
| 18 | Approval by the Engineer | 54 | Taking Over |
| 19 | Safety | 55 | Substantial Completion |
| 20 | Discoveries | 56 | Defect Liability |
| 21 | Possession of the Site | 57 | Final Account |
| 22 | Access to the Site | 58 | Operating and Maintenance Manuals |
| 22A | Royalties | 59 | Termination |
| 23 | Instructions | 60 | Payment upon Termination |
| 24 | Dispute Redressal System | 61 | Property |
| 25 | Arbitration | 62 | Release from Performance |
| **B.** | **Time Control** | **F.** | **Special Conditions of Contract** |
| 26 | Programme | 63 | Agreement |
| 27 | Extension of the Intended Completion Date | 64 | Delivery, Annual Maintenance Contract (AMC) |
| 28 | Delays Ordered by the Engineer | 65 | Technical Support Services & Service Level Agreement (SLA): |
| 29 | Management Meetings | 66 | Provisional Acceptance Certificate (PAC) |
| **C.** | **Quality Control** | 67 | Final Acceptance Certificate (FAC) |
| 30 | Identifying Defects | 68 | Force Majeure |
| 31 | Tests | 69 | Payment Terms |
| 32 | Correction of Defects | 70 | Labour Clause |
| 33 | Uncorrected Defects | | |

## Section 3

## Part I General Conditions of Contract

### A. General

### 1. Definitions

**1.1** Terms which are defined in the Contract Data are not also defined in the Conditions of Contract but keep their defined meanings. Capital initials are used to identify defined terms.

**Bill of Quantities** means the priced and completed Bill of Quantities forming part of the Bid.

**Compensation Events** are those defined in Clause 40 hereunder.

**The Completion Date** is the date of completion of the Works as certified by the Engineer, inaccordance with Clause 48.1.

**The Contract** is the Contract between the Employer and the Contractor to execute, complete,and maintain the Works. It consists of the documents listed in Clause 2.3.

**The Contract Data** defines the documents and other information which comprise theContract.

**The Contractor** is a person or corporate body whose Bid to carry out the Works, includingroutine maintenance, has been accepted by the Employer.

**The Contractor's Bid** is the completed bidding document submitted by the Contractor to theEmployer.

**The Contract Price** is the price stated in the Letter of Acceptance and thereafter as adjusted inaccordance with the provisions of the Contract.

**Days** are calendar days; months are calendar months.

**A Defect** is any part of the Works not completed in accordance with the Contract or distresseddevelopment in the work irrespective of any causes.

**The Defect Liability-cum-Maintenance Period** is the period named in the contract Data andcalculated from the Completion Date.

**The 'Defect Liability-cum-Maintenance Period'** is without any payment for maintenanceactivities.

**The Defect Liability-cum-Maintenance Period Certificate** is the certificate issued by Engineer, after the Defect Liability-cum-Maintenance Period has ended and upon correction of Defects by the Contractor.

**The Maintenance** means the activities required to be carried out for routine maintenance of road relating to works covered in scope of work as per the agreement.

**Drawings** include calculations and other information provided or approved by the Engineer for the execution of the Contract.

**The Employer** is the party as defined in the Contract Data, who employs the Contractor to carry out the Works, including routine maintenance. The Employer may delegate any or all functions to a person or body nominated by him for specified functions.

**The Engineer** is the person named in the Contract Data (or any other competent person appointed by the Employer and notified to the Contractor, to act in replacement of the Engineer) who is responsible for supervising the execution of the Works and administering theContract.

**Equipment** is the Contractor's machinery and vehicles brought temporarily to the Site to construct the Works.

**The Initial Contract Price** is the Contract Price listed in the Employer's Letter of Acceptance.

**The Intended Completion Date** is the date on which it is intended that the Contractor shall complete the Works. The Intended Completion Date is specified in the Contract Data. The Intended Completion Date may be revised only by the Engineer by issuing an extension of time.

**Materials** are all supplies, including consumables, used by the Contractor for incorporation in the Works.

**Plant** is any integral part of the Works that shall have a mechanical, electrical, electronic, chemical, or biological function.

The **Site** is the area defined as such in the Contract Data.

**Site Investigation Reports** are those that were included in the bidding documents and are reports about the surface and subsurface conditions at the Site.

**Specification** means the Specification of the Work included in the Contract and any modification or addition made or approved by the Engineer.

The **Start Date** is given in the Contract Data. It is date when the Contractor shall commence execution of the works. **It does not necessarily coincide with any of the Site Possession Dates.**

A **Sub-Contractor** is a person or corporate body who has a Contract with the Contractor to carry out a part of the construction work in the Contract, which includes work on the Site.

**Temporary Works** are works designed, constructed, installed, and removed by the Contractorthat are needed for construction or installation of the Works.

A **Variation** is an instruction given by the Engineer, which varies the Works.

**The Works,** as defined in the Contract Data, are what the Contract requires the Contractor to construct, install, maintain, and hand over to the Employer.

**Substantial completion** means those works which are at least 95% completed as on the date of submission (i.e. gross value of work done upto the last date of submission is 95% or more of the original contract price) and continuing satisfactorily.

## 2. Interpretation

**2.1** In interpreting these Conditions of Contract, singular also means plural, male also means female or neuter, and the other way around. Headings have no significance. Words have their normal meaning under the language of the Contract unless specifically defined. The Engineer will provide instructions clarifying queries about these Conditions of Contract.

**2.2** If sectional completion is specified in the Contract Data, references in the Conditions of Contract to the Works, the Completion Date, and the Intended Completion Date apply to any Section of the Works (other than references to the Completion Date and Intended Completion Date for the whole of the Works).

**2.3** The documents forming the Contract are to be taken as mutually explanatory, and unless otherwise expressly provided elsewhere in the Contract, the priority of the documents, in the event of any ambiguity between them, shall be interpreted in the following order of priority:

(1) Agreement,
(2) Notice to Proceed with the Work,
(3) Letter of Acceptance,
(4) Contractor's Bid,
(5) Contract Data,
(6) Special Conditions of Contract Part II,
(7) General Conditions of Contract Part I,
(8) Specifications,
(9) Drawings,
(10) Bill of Quantities, and
(11) Any undertaking given subsequent to submission of bid.
(12) Any other document listed in the Contract Data.

## 3. Language and Law

**3.1** The language of the Contract shall be English. The law governing the Contract are the Acts/Rules/Guidelines etc. notified by Government of India and Government of Haryana.

## 4. Engineer's Decisions

**4.1** Except where otherwise specifically stated, the Engineer will decide contractual matters between the Employer and the Contractor in the role representing the Employer. However, if the Engineer is required under the rules and regulations and orders of the Employer to obtain approval of some other authorities for specific actions, he will so obtain the approval.

**4.2** Except as expressly stated in the Contract, the Engineer shall not have any authority to relieve the Contractor of any of his obligations under the Contract.

## 5. Delegation

**5.1** The Engineer, with the approval of the Employer, may delegate any of his duties and responsibilities to other person, after notifying the Contractor, and may cancel any delegation after notifying the Contractor.

## 6. Communications

**6.1** All certificates, notices or instructions to be given to the Contractor by the Employer/Engineer shall be sent on the address or contact details given by the Contractor. Theaddress and contact details for communication with the Employer/ Engineer shall be as per thedetails given in Contract Data to GCC. Communications between parties that are referred to in the conditions shall be in writing. The Notice sent by facsimile (fax) or other electronic means shall be effective on confirmation of the transmission. The Notice sent by Registered post or Speed post shall be effective on delivery or at the expiry of the normal delivery period as undertaken by the postal service.

## 7. Subcontracting

**7.1(a) The Contractor may subcontract part of the work with the approval of the Employer in writing, up to 50 percent of the contract price, but will not assign the Contract**. It is expressly agreed that the Contractor shall, at all times, be responsible and liablefor all his obligations under this Agreement notwithstanding anything contained in the agreements with his Sub-contractors or any other agreement that may be entered into by the Contractor and no default under any such agreement shall exempt the Contractor from his obligations or liability hereunder.

**7.1** **(b)** However, any specialized work can be Subletted to a Sub Contractor possessing required valid Experience and certificate required if any after approval from the Employer.

**7.2** The Contractor shall not be required to obtain any consent from the Employer for:

(a) the sub-contracting of any part of the Works for which the Sub-Contractor isnamed in the Contract;

(b) the provision for labour, or labour component.

(c) the purchase of Materials which are in accordance with the standards specifiedin the Contract.

**7.3.** The Engineer should satisfy himself before recommending to the Employer whether the Sub-Contractor so proposed for the Works possesses the experience, qualifications and equipment necessary for the job proposed to be entrusted to him in proportion to the quantum of Works to be sub-contracted.

**7.4** While sub-contracting part of construction work as per provisions of Clause 7.1 and

7.3 above, the Contractor shall enter into formal sub-contract with sub-contractor making provisions for such requirements as may be specified by the Engineer including a cond ition that to the extent of inconsistency, provision of the Contract shall prevail over the provisions of the sub-contract. A copy of document of formal sub-contract shall be furnished to the Employer within a period of 30 days from the date of such sub-contract. In all such cases, on completion of the Contract, the Engineer, unless for reasons recorded in writing decides otherwise shall issue a Certificate of Experience to the contractor and in such certificate, the experience of the sub-contractors shall also be mentioned. The Copy of such certificate would also be endorsed to the sub-contractor.

## 8. Other Contractors

**8.1** The Contractor shall cooperate and share the Site with Other Contractors, public authorities, utilities, and the Employer between the dates given in the Schedule of Other Contractors, as referred to in the Contract Data. The Contractor shall also provide facilities and services for them as described in the Schedule. The Employer may modify the Schedule of Other Contractors, and shall notify the Contractor of any such modification.

**8.2** The Contractor should take up the works in convenient reaches as decided by the Engineer to ensure there is least hindrance to the smooth flow of traffic including movement of vehicles and equipment of Other Contractors till the completion of the Works.

## 9. Personnel

**9.1** The Contractor shall ensure that the personnel engaged by it in the performance of its obligations under this Contract are at all times appropriately qualified, skilled and experiencedin their respective functions.

**9.2** The Contractor shall employ for the construction work and operation of lab, the technical personnel named in the Contract Data or other technical persons approved by the Engineer. Before signing the agreement the contractor will submit the bio data of the technicalpersonnel, as given in contract data, he proposes to employ on this work to the Engineer and will get the bio data approved from the Engineer. The Engineer will approve any proposed replacement of technical personnel only if their relevant qualifications and abilities are substantially equal to or better than those of the personnel stated in the Contract Data.

**9.3** If the Engineer asks the Contractor to remove a person who is a member of the Contractor's staff or work force, stating the reasons, the Contractor shall ensure that the personleaves the Site within seven days and has no further connection with the Works in the Contract. The Contractor shall then appoint (or cause to be appointed) a replacement.

**9.4** The Contractor shall not employ any retired Gazetted officer who has worked in the Engineering Department of the State Government and has either not completed two years afterthe date of retirement or has not obtained State Government's permission for employment with the Contractor.

**9.5** The Engineer may require the Contractor to remove (or cause to be removed) any person employed on the Site or Works, including the Contractor's Representative, who in the opinion of the Engineer:

(a) persists in any misconduct,
(b) is incompetent or negligent in the performance of his duties,
(c) fails to conform with any provisions of the Contract, or
(d) persists in any conduct which is prejudicial to safety, health, or the protectionof the environment.

## 10. Employer's and Contractor's Risks

**10.1** The Employer carries the risks which this Contract states are Employer's risks, and the Contractor carries the risks which this Contract states are Contractor's risks.

## 11. Employer's Risks

**11.1** The Employer is responsible for the excepted risks which are (a) in so far as they directly affect the execution of the Works in the Employer's country, the risks of war, invasion, act of foreign enemies, rebellion, revolution, insurrection or military or usurped power, civil war, riot commotion or disorder (unless restricted to the Contractor's employees) and contamination from any nuclear fuel or nuclear waste or radioactive toxic explosive.

## 12. Contractor's Risks

**12.1** All risks of loss of or damage to physical property and of personal injury and death whicharise during and in consequence of the performance of the Contract other than the excepted risks, referred to in clause 11.1, are the responsibility of the Contractor.

## 13. Insurance

**13.1** The Contractor at his cost shall provide, in the joint names of the Employer and the Contractor, insurance cover from the Start Date to the date of completion, in the amounts and deductibles stated in the Contract Data for the following events which are due to the Contractor's risks:

(a) loss of or damage to the Works and material, plant and machinery to beincorporated in the work.

(b) Personal injury or death.

(c) Loss of damage to property of third party other than the Contractor and the Employer (except works, plant, material and equipments) in connection with the Contract.

**13.2** Insurance policies and certificates for insurance shall be delivered by the Contractor to the Engineer for the Engineer's approval before the Start Date. All such insurance shall provide for compensation to be payable in Indian Rupees to rectify the loss or damage incurred.

**13.3** **(a)** The Contractor at his cost shall also provide, in the joint names of the Employer and the Contractor, insurance cover from the date of completion to the end of **Defect Liability- cum-Maintenance Period**, in the amounts and deductibles stated in the Contract Data for personal injury or death which are due to the Contractor's risks:

**(b)** Insurance policies and certificates for insurance shall be delivered by the Contractor to the Engineer for approval before the completion date/start date. All such insurance shall provide for compensation to be payable in Indian Rupees.

**13.4** Alterations to the terms of insurance shall not be made without the approval of the Employer.

**13.5** Both parties shall comply with any conditions of the insurance policies.

## 14. Site Investigation Reports

**14.1** The Contractor, in preparing the Bid, may, at his own risk, rely on any Site Investigation Reports if referred to in the Contract Data, supplemented by any other information available to him, before submitting the bid.

**14.2** The Contractor shall be required to make adequate dewatering arrangements to make the area dry for construction work. No separate payment shall be made to the Contractor for dewatering. The percentage premium (above or below) for HSR items and individual rates for NS items shall include the cost of dewatering unless specific provisions are made in the BOQ for payment of dewatering. This includes sub soil/surface dewatering also, if needed to execute the work properly.

## 15. Queries about the Contract Data

**15.1** The Engineer will clarify queries on the Contract Data.

## 16. Contractor to Construct the Works

**16.1** The Contractor shall construct, and install and maintain the Works in accordance with the Specifications and Drawings.

## 17. The Works to Be Completed by the Intended Completion Date

**17.1** The Contractor may commence execution of the Works on the Start Date after fulfillment of Signing of Agreement etc. and shall carry out the Works in accordance with the Program submitted by the Contractor, as updated with the approval of the Engineer, and complete them by the Intended Completion Date.

## 18. Approval by the Engineer

**18.1** The Contractor shall submit Specifications and Drawings showing the proposed Temporary Works to the Engineer, who is to approve them.

**18.2** The Contractor shall be responsible for design and safety of Temporary Works.

**18.3** The Engineer's approval shall not alter the Contractor's responsibility for design and safety of the Temporary Works.

**18.4** The Contractor shall obtain approval of third parties to the design and safety of the Temporary Works, where required.

**18.5** All Drawings prepared by the Contractor for the execution of the temporary or permanent Works, are subject to prior approval by the Engineer before their use.

## 19. Safety

**19.1** The Contractor shall be responsible for the safety of all activities on the Site.

**19.2** The Contractor shall be responsible for safety of all persons, employed by him on Works, directly or through petty contractors or Sub-Contractors, and shall report accidents to any of them, however, and wherever occurring on Works, to the Engineer or the Engineer's

Representative, and shall make every arrangement to render all possible assistance and to provide prompt and proper medical attention. The compensation for affected Workers or their relatives shall be paid by the Contractor in such cases expeditiously in accordance with the Workmen's Compensation Act and other labour Laws and regulations.

## 20. Discoveries

**20.1** Anything of historical or other interest or of significant value unexpectedly discovered onthe Site shall be the property of the Employer. The Contractor shall notify the Engineer of such discoveries and carry out the Engineer's instructions for dealing with them.

## 21. Possession of the Site

**21.1** The Employer shall handover complete or part possession of the site to the Contractor seven days in advance of construction Programme. At the start of the work, the Employer shallhandover the possession of at least 75% of the site.

## 22. Access to the Site

**22.1** The Contractor shall allow access to the Site and to any place where work in connection with the Contract is being carried out, or is intended to be carried out to the Engineer and any person/persons/agency authorized by:

(a) The Engineer

(b) The Employer

(c) GMDA.

**22 A. Royalties**

Not Applicable.

## 23. Instructions

**23.1** The Contractor shall carry out all instructions of the Engineer, which comply with the applicable laws where the Site is located.

## 24. Dispute Redressal system

**24.1** If any dispute or difference of any kind what-so-ever shall arise in connection with or arising out of this contract or the execution of work or Defect Liability-cum- Maintenance period of the works there under, whether before its commencement or during the progress of works or after the termination, abandonment or breach of the contract, it shall, in the first instance, be referred for settlement to the competent authority, described alongwith their powers in the contract data above the rank of the Engineer. The competent authority shall, within a period of forty five days after beingrequested in writing by the contractor to do so, convey his decision to the contractor. Such decision in respect of every matter so referred shall, subject to review as hereinafter provided, be final and binding upon the contractor. In case the work is already in progress, the contractor shall proceed with the execution of the works, including maintenance thereof pending receipt of the decision of the authority as aforesaid, with all due diligence.

**24.2** Either of the parties is barred from making reference to the competent authority after 120 days from completion of work i.e. the claims will be time barred if the reference to the competent authority is not made within 120 days from the completion of work.

**24.3** Either Party will have the right to apply for arbitration as provided here in after ifhe/it is not satisfied with decision of the competent authority.

## 25. Arbitration

(a) Where any of the party is not satisfied with the order passed by the competent authority can apply for appointment of Arbitrator. In case the party invoking arbitrator is contractor he shall deposit 2% of claim amount with 'Engineer'. On termination of the arbitration proceedings, this fee shall be adjusted against the cost,if any, awarded by the arbitrator against the claimant party and the balance remaining after such adjustment, and in the absence of such cost being awarded, the whole of the sum bill will be refunded within one month of the date of award.

(b) For agreement amounts upto Rs. 10.00 Crore (after adjusting the contract price any increase/decrease due to variations etc.) the matter will be referred to a single Arbitrator to be appointed by the Engineer-in-Chief from the panel of arbitrators approved by the Government.

(c) (i) For agreement amounts more than Rs. 10.00 Crore (after adjusting the contract price any increase/decrease due to variations etc.) the matter will be referred to an Arbitral Tribunal consisting of 3 arbitrators, one each to be appointed by the Employer after taking approval from Engineer-in-Chief and the contractor and the third arbitrator to be chosen by the two arbitrators so appointed by both the parties to act as Presiding Arbitrator. In case of failure of the two arbitrators appointed by the parties to reach upon a consensus within a period of 30 days from the appointment of the arbitrator appointed subsequently, the Presiding Arbitrator shall be appointed by the Administrative Secretary, of the department to which the work belongs (Principal Secretary/ Additional Chief Secretary) as the case may.

ii) If one of the parties fails to appoint its arbitrator in pursuance of sub-clause c(i) above within 30 days after receipt of the notice of the appointment of its arbitrator by the other party, then the Administrative Secretary, of the department to which the work belongs shall appoint the arbitrator. A certified copy of the order of the Administrative Secretary, of the department to which the work belongs, making such an appointment shall be furnished to each of the parties.

iii) The decision of the majority of arbitrators shall prevail both parties.

(d) Arbitration proceedings shall be held in India, and the language of the arbitration proceedings and that of all documents and communications between the parties shallbe English.

(e) The cost and expenses of Arbitration proceedings will be paid as provided hereinafter. However, the expenses incurred by each party in connection with the preparation, presentation, etc. of its proceedings as also the fees and expenses paid to the arbitrator appointed by such party or on its behalf shall be borne by each party itself. The fee and expenses of presiding Arbitrator shall be borne by both the parties equally.

(f) Performance under the contract shall continue during the arbitration proceedings and payments due to the contractor by the employer shall not be withheld, unless they are the subject matter of the arbitration proceedings.

(g) The fee and other charges payable to an arbitrator shall be as per of "THE ARBITRATION AND CONCILIATION (AMENDMENT) ACT., 2016.

## B. Time Control

### 26. Programme

**Overall Milestones to be achieved during the Upgradation Period:**

| Item # | Milestone | Days |
|---|---|---|
| | Issuance of Letter of Award, Signing of Agreement with successful Bidder | T0 |
| M1 | Conducting Survey and Providing work plan for providing Centralized Integrated Water Management System (CIWMS) as per Scope of work and submission and approval of Software Requirement Specifications (SRS) etc. | T0 + 30 days=T1 |
| M2 | Supply and Installation of CIWMS software on GMDA Servers and proto type demonstration of functions etc. | T1+ 90 days = T2 |
| M3 | Supply and Installation of items related to monitoring and control of WTP Basai, WTP Chandu, Booster Stations and integration with the CIWMS Software as per Scope of Work. | T1 + 90 days= T3 |
| M4 | Supply and Installation of items related to monitoring of Water Quality at WTP Basai, WTP Chandu, and integration with the CIWMS Software as per Scope of Work. | T1 + 90 days= T4 |
| M5 | Supply and Installation of field items for 1300 mm Water Pipe line of GMDA along with Pre-fabricated RCC / PCC Chambers as per site requirement and associated Civil work and integration with the CIWMS Software as per Scope of Work. | T1 + 120 days= T5 |
| M6 | Complete testing of Centralized Integrated Water Management System (CIWMS) including integration with Field devices and demonstration of various parameters to be achieved. Also includes integration with existing CIWMS system. and issue of PAC (Go live) and start of Warranty Period including Training and Handholding. | T5 + 60 days= T6 |
| M7 | Operation and Maintenance (All items) | T6 + 05 years |

***T0 is date 15 days from the date of Issuance of Letter of Award, Signing of Agreement with successful Bidder***

**26.1** Indicated in the Contract Data, the Contractor shall submit to the Engineer for approval a Programme showing the general methods, arrangements, order, and timing for all the activities in the Works, for the construction of works.

**26.2** The Contractor shall submit the list of equipment and machinery being brought to site, the list of key personnel being deployed, the list of machinery/ equipments being placed in field laboratory and the location of field laboratory along with the Programme. The Engineer shall cause these details to be verified at each appropriate stage of the programme.

**26.3** An update of the Programme shall be a programme showing the actual progress achieved on each activity and the effect of the progress achieved on the timing of the remaining Works, including any changes to the sequence of the activities.

**26.4** The Contractor shall submit to the Engineer for approval an updated Programme at intervals no longer than the period stated in the Contract Data. If the Contractor does not submit an updated Programme within this period, the Engineer may withhold the amount stated in the Contract Data from the next payment certificate and continue to withhold this amount until the next payment after the date on which the overdue Programme has been submitted.

**26.5** The Engineer's approval of the Programme shall not alter the Contractor's obligations. The Contractor may revise the Programme and submit it to the Engineer again at any time. A revised Programme shall show the effect of Variations and Compensation Events.

## 27. Extension of the Intended Completion Date

**27.1** The Engineer shall extend the Intend Completion Date, with approval from authority competent to grant time extension as mentioned in clause 16.16.6 of PWD code through Employer, if a Compensation Event occurs or a Variation is issued which makes it impossible for Completion to be achieved by the Intended Completion Date without the Contractor takingsteps to accelerate the remaining work and which would cause the Contractor to incur additional cost.

The Clause 16.16.6 is reproduced as under:-
"16.16.6 The authority competent to technically sanction the estimate shall have the power to grant EOT. However, to check disproportionate EOTs and to ensure uniformity in approach, the Engineer-in-Chief shall issue instructions in this regard from time to time."

The Engineer with the approval of the authority competent to grant time extension as per PWD Code Clause 16.16.6 through employer shall decide whether and by how much to extend the Intended Completion date within 56 days of the Contractor asking the Engineer fora decision upon the effect of a compensation event or variation and submitting full supporting information. If the Contractor has failed to give early warning to delay or has failed to cooperate in dealing with a delay, the delay by the failure shall not be considered in accessing the new Intended Completion Date.

**27.2** The Engineer shall within 14 days of receiving full justification from the contractor forextension of Intended Completion Date refer to the employer. The employer shall refer the case to the authority competent to grant time extension as per Clause 16.16.6 of PWD Code within further 14 days for his decision. It the authority competent to grant time extension fails to give his acceptance within next 28 days, the engineer shall not grant the time extension and the Contractor may refer the matter to the Dispute Redressal System under clause 24.1. In casethe employer happens to be the authority competent to grant time extension, he would convey his decision to the Engineer within 42 days.

## 28. Delays Ordered by the Engineer

**28.1** The Engineer may instruct the Contractor to delay the start or progress of any activity within the Works. Delay/delays totaling more than 30 days will require prior written approval of the Employer.

## 29. Management Meetings

**29.1** The Engineer may require the Contractor to attend a management meeting. The business of a management meeting shall be to review the plans for the Works.

**29.2** The Engineer shall record the business of management meetings and provide copies of the record to those attending the meeting. The responsibility of the parties for actions to be taken shall be decided by the Engineer either at the management meeting or after the management meeting and stated in writing to all those who attended the meeting.

## C. Quality Control

### 30. Identifying Defects

**30.1** The Engineer shall check the Contractor's work and notify the Contractor of any Defects that are found. Such checking shall not affect the Contractor's responsibilities. The Engineer may instruct the Contractor to search for a Defect and to uncover and test any work that the Engineer considers may have a Defect.

### 31. Tests

**31.1** For carrying out mandatory tests as prescribed in the specifications, the Contractor shall establish field laboratory at the location decided by Engineer. The field laboratory will have minimum equipments as specified in the Contract Data. The Contractor shall be solely responsible for:

**(a)** Carrying out the mandatory tests prescribed in the relevant Specifications, and
**(b)** For the correctness of the test results, whether preformed in his laboratory orelsewhere.

If the Engineer instructs the Contractor to carry out a test not specified in the Specifications to check whether any work has a Defect and the test shows that it does, the Contractor shall pay for the test and any samples.

### 32. Correction of Defects noticed during the Defects Liability-cum-MaintenancePeriod

**32.1** The Engineer shall give notice to the Contractor of any Defects before the end of the Defect Liability-cum-Maintenance Period, which begins from the Completion Date. The Defect Liability-cum-Maintenance Period shall be extended for as long as the Defects remain to be corrected.

**32.2** Every time notice of Defect/Defects is given, the Contractor shall correct the notified Defect/Defects within the duration of time specified by the Engineer's notice.

**32.3** Not applicable

**32.4** The Engineer may issue notice to the Contractor to carry out maintenance of defects, ifany, noticed in his inspection, or brought to his notice. The Contractor shall remove the defects within the period specified in the notice and submit to the Engineer a compliance report.

### 33. Uncorrected Defects

**33.1.** If the Contractor has not corrected a Defect within the time specified in the 'Engineer'snotice, the 'Engineer' will assess the cost of having the Defect corrected, and the Contractor will pay equivalent of this amount.

**33.2** If the contractor fails to pay the amount as intimated by the 'Engineer' to the contractor as per clause 36.1 the same shall be recovered from the running bill or the security amount andit if is more than the security amount then the same shall be recovered from the performance security.

## D. Cost Control

### 34. Bill of Quantities

**34.1** The Bill of Quantities shall contain items for the construction, installation, testing, and commissioning works to be done by the Contractor.

**35** The Bill of Quantities is used to calculate the Contract Price. The Contractor is paid for the quantity of the work done at the rates in the Bill of Quantities for each item.

### 36. Variations

**36.1** The Engineer shall, having regard to the scope of the Works and the sanctioned estimatedcost, have power to order, in writing, Variations within the scope of the Works, he considers necessary during the progress of the Works. Such Variations shall form part of the Contract and the Contractor shall carry them out and include them in updated Programmes produced bythe Contractor. Oral orders of the Engineer for Variations, unless followed by written confirmation, shall not be taken into account.

### 37. Payments for Variations

**37.1.** If the final quantity of the work done differs from the quantity in the Bill of Quantities for the particular item by more than 25 per cent provided the change exceeds 1% of initial Contract Price, the 'Engineer' with the approval of the Competent Authority and shall adjust the rate to allow for the change, duly considering:

(a) justification for rate adjustment as furnished by the Contractor,

(b) economies resulting from increase in quantities by way of reduced plant, equipment and overhead costs.

(c) Entitlement of the Contractor to compensation events where such events are caused by any additional work.

**37.2.** If requested by the 'Engineer' / Employer, the Contractor shall provide the 'Engineer' / Employer with a detailed cost breakdown of any rate in the Bill of Quantities.

### 38. Cash Flow Forecasts

**38.1** When the Programme is updated, the Contractor shall provide the Engineer with an updated cash flow forecast.

### 39. Payment Certificates

**39.1.** The Contractor shall submit to the 'Engineer' monthly statements of the estimated value of the work completed less the cumulative amount certified previously by 1st week of the month. In case contractor does not submit his bill by 1st week of the month, 'Engineer' shall get the monthly statement of the estimated value of work completed less cumulative amount prepared by the end of third week of the month. This procedure will be followed even if no work is carried out at the site of work.

**39.2** The 'Engineer' shall check the Contractor's monthly statement within 21 days of the date of submission and certify the amount as per agreement to be paid to the Contractor.

## 40. Payments

**40.1** Payments shall be adjusted for deductions for advance payments, security deposit/retention, other recoveries in terms of the contract and taxes at source, as applicable under the law.

**40.2** The Employer may appoint another authority, as specified in the Contract Data (or any other competent person appointed by the Employer and notified to the bidder) to make payment certified by the Engineer.

**40.3** Items of the Works for which no rate or price has been entered in the Bill of Quantities, will not be paid for by the Employer and shall be deemed covered by other rates and prices in the Contract. The Agency / Bidder to whom the work is allotted shall be paid amount calculated with the accepted rates of lowest agency in the running / final bills.

40.4 The payment for **Centralized Integrated Water Management System (CIWMS)** of **GMDA** shall be done as per payment schedule.

40.5 GMDA will release the payment on submission of valid invoice subject to the condition that invoice and all supporting documents produced are in order and work is performed as per the scope of the project.

40.6 GMDA shall be entitled to delay or withhold the payment of a disputed invoice or part of it delivered by bidder, when department disputes such invoice or part of it, provided that such dispute is bona fide.

40.7 All payments shall be made corresponding to the goods or services delivered, installed, or operationally accepted, as per the Contract Implementation Schedule, at unit prices and in the currencies specified in the Commercial Bids.

**40.8** If the Bidder is liable for any penalty as per the SLA (refer to the related clause of this agreement), the same shall be adjusted from payments due to the Bidder.

**40.9** In case Go-Live is delayed, the corresponding Operations and Maintenance phase will start after the Go-Live has been declared.

**41. Payment Schedule:**

**The stage wise payment schedule shall be as follows:**

| Item | Payment Stage | Item wise % release of LoA rates |
|---|---|---|
| **1** | Conducting Survey and Providing work plan for providing Centralized Integrated Water Management System (CIWMS) as per Scope of work and submission and approval of Software Requirement Specifications (SRS) etc. | 5% |
| **2** | Supply and Installation of CIWMS software on GMDA Servers and proto type demonstration of functions etc. | 60% |
| **3** | Supply and Installation of items including any other items related to monitoring and control of WTP Basai, WTP Chandu, Booster Stations and integration with the CIWMS Software as per Scope of Work. | 60% |

| | | |
|---|---|---|
| **4** | Supply and Installation of items including any other items related to monitoring of Water Quality at WTP Basai, WTP Chandu, and integration with the CIWMS Software as per Scope of Work. | 60% |
| **5** | Supply and Installation of field items including any other items for 1300 mm Water Pipe line of GMDA along with Pre-fabricated RCC / PCC Chambers as per site requirement and associated Civil work and integration with the CIWMS Software as per Scope of Work. | 60% |
| **6** | Payment of all items including any other items on complete testing of Centralized Integrated Water Management System (CIWMS) including integration with Field devices and demonstration of various parameters to be achieved. Also includes integration with existing CIWMS system. and issue of PAC (Go live) and start of Warranty Period including Training and Handholding. | 30% |
| **7** | Final Payment of all items including any other items on completion of One Year post Go Live / Warranty period. | 5% |
| **8** | Payment for Resources engaged (Table B) | Quarterly basis |
| **9** | Annual Maintenance charges (Table D) post Go live | Quarterly basis |

**42.** The Employer may appoint another authority, as specified in the Contract Data (or any other competent person appointed by the Employer and notified to the Contractor) to make payment certified by the Engineer.

**43.** Items of the Works for which no rate or price has been entered in the Bill of Quantities,will not be paid for by the Employer and shall be deemed covered by other rates and prices in the Contract.

**44.** The agency / bidder to whom the work is allotted shall be paid lowest of the following in the running / final bills**: -**

1. Amount Calculated with the accepted rates of the Successful bidder to whom the work is awarded.

**Compensation Events**

**44.1** The following are Compensation Events unless they are caused by the Contractor:

i. The Employer does not give access to 80% of the area of project Site by the site Possession Date stated in the Contract Data.
ii. The Employer modifies the schedule of other contractors in a way which affects the work of the contractor under the contract.
iii. The Engineer orders a delay or does not issue drawings, specifications orinstructions required for execution of works on time.
iv. The Engineer instructs the Contractor to uncover or to carry out additional testsupon work which is then found to have no Defects.
v. The Engineer does not approve of a subcontract to be let, within 30 days.
vi. Ground conditions are substantially more adverse than could reasonably have been assumed before issuance of Letter of Acceptance from the information issued to Bidders (including the Site Investigation Reports), from information available publicly and from a visual inspection of the site.

vii. The Engineer gives an instruction for dealing with an unforeseen condition, caused by the Employer, or additional work required for safety or other reasons.
viii. Other contractors, public authorities, utilities or the Employer does not work within the dates and other constraints stated in the Contract, and they cause delay or extra cost to the Contractor.
ix. The advance payment is delayed, beyond 28 days after receipt of application and bank guarantee.
x. The effect on the Contractor of any of the Employer's Risks.
xi. The Engineer unreasonably delays issuing a Certificate of Completion.
**xii.** Other Compensation Events listed in the Contract Data or mentioned inthe Contract**.**

**44.2: Not applicable.**

**44.3** If a Compensation Event would prevent the Works being completed before the Intended Completion Date, the Intended Completion Date shall be extended. The Engineer shall recommend to the Employer whether and by how much the Intended Completion Date shall be extended. Final approval shall rest with the Employer.

**45. Tax**

**45.1** The rates quoted by the Contractor shall be deemed to be inclusive of all taxes of Central and State Governments (including GST), duties, royalties, cess, toll, other levies etc. of local bodies and authorities that the Contractor will have to pay for the performance of this Contract. The Employer will perform such duties in regard to the deduction of such taxes at source as per applicable law.

**46 Currencies**

**46.1** All payments will be made in Indian Rupees.

**47. Price Adjustment: (Not Applicable)**

**48. Retention Money**

The Employer shall retain is sum of 6% (six percent) from each payment due to the contractor subject to maximum of 5% of the final contract price until Completion of the wholeof the Works.

On completion of the whole of the Works half the total amount retained is repaid to the Contractor and half when the Defect Liability-cum-Maintenance Period has passed and the Engineer has certified that all Defects notified by the Engineer to the Contractor before the end of this period have been corrected.

On completion of the whole works, the contractor may substitute retention money withan "on demand" Bank guarantee/FDR.

**49. Liquidated Damages**

**49.1** In the event of failure on part of the Contractor to achieve timely completion of the project, including any extension of time granted under Clause 27, he shall, without prejudiceto any other right or remedy available under the law to the Employer on account of such breach, pay as agreed liquidated damages to the Employer and not by way of penalty in a sum calculated at the rate per day or part thereof as stated in the Contract Data. For the period that the Completion Date is later than the Intended Completion Date, liquidated damages at the same rate shall be withheld if the Contractors fails to achieve the milestones prescribed in the Contract Data. However, in case the Contractor achieved the next milestone, the amount of theliquidated damages already withheld shall be restored to the Contractor by adjustment in the payment certificate. Both the Parties expressly agree that the total amount of liquidated damages shall not exceed 10% (ten percent) of the value of the balance work (amount of uncompleted work) on the date on which liquidated damages have become due. The liquidateddamages payable by the Contractor are mutually

agreed genuine pre-estimated loss and without any proof of actual damage likely to be suffered and incurred by the Employer; and the Employer is entitled to receive the same and are not by way of penalty.

The Employer may, without prejudice to any other method of recovery, deduct the amount of such damages from any sum due, or to become due to the Contractor or from Performance Security or any other dues from Government or semi Government bodies within the state.

The payment or deduction of such damages shall not relieve the Contractor from his obligations to complete the Works, or from any other of his duties, obligations or responsibilities under the Contract.

The Contractor shall use and continue to use his best endeavour to avoid or reduce further delay to the Works, or any relevant Stages.

**49.2** If the Intended Completion Date is extended after liquidated damages have been paid, the Engineer shall correct any such payment of liquidated damages by the Contractor by adjusting the next payment certificate.

**49.3** It is agreed by the Contractor that the decision of the Employer as to the liquidated damages payable by the Contractor under this Clause shall be final and binding.

## 50. Advance Payment

**50.1.** The Employer shall make advance payment to the Contractor of the amounts stated in the Contract Data by the date stated in the Contract Data, against provision by the Contractor of an Unconditional Bank Guarantee in a form as per Section-7 and by a bank acceptable to the Employer in amounts and currencies equal to the advance payment. The guarantee shall remain effective until the advance payment has been repaid, but the amount of the guarantee shall be progressively reduced by the amounts repaid by the Contractor. Interest will be charged on the advance payment as specified in the contract data.

**50.2.** The Contractor is to use the advance payment only to pay for Equipment, Plant and Mobilization expenses required specifically for execution of the Works. The Contractor shall demonstrate that advance payment has been used in this way by supplying copies of invoices or other documents to the 'Engineer'.

**50.3.** The advance payment shall be repaid by deducting proportionate amounts from payments otherwise due to the Contractor. Following the schedule of completed percentages of the Works on a payment basis. No account shall be taken of the advance payment or its repayment is assessing valuations of work done, Variations, price adjustments, Compensation Events, or Liquidated Damages.

## 50.4. Secured Advance

The 'Engineer' shall make advance payment in respect of materials intended for but not yet incorporated in the Works in accordance with conditions stipulated in the Contract Data.

## 51 Securities

**51.1** The Performance Security equal to 3% (three percent) and additional security for unbalanced bids shall be provided to the Employer no later than the date specified in the Letterof Acceptance and shall be issued in an amount and form and by a bank or surety acceptable tothe Employer, and denominated in Indian Rupees. The Performance Security shall be valid until a date 45 days from the date of expiry of Defect Liability-cum-Maintenance Period and the additional security for unbalanced bids shall be valid until a date 28 days from the date of issue of the certificate of completion.

## 52. Cost of Repairs

**52.1** Loss or damage to the Works or Materials to be incorporated in the Works between theStart Date and the end of the **Defect Liability-cum-Maintenance Period** shall be remedied by the Contractor at his cost if the loss or damage arises from the Contractor's acts or omissions.

## E. Finishing the Contract

### 53. Completion of Construction and Maintenance

**53.1** The Contractor shall request the Engineer to issue a Certificate of Completion of the works and the Engineer will do so upon deciding that the Work is completed, within 21 days of the receipt of request or within a reasonable period as per nature of the work.

### 54. Taking Over

**54.1** The Employer shall take over the Works within seven days of the Engineer's issuing a certificate of Completion of Works. The Contractor shall continue to remain responsible for its**Defect Liability-cum-Maintenance period during the Defect Liability-cum-Maintenance Period.**

**54.2** The Employer shall take over the maintained work within seven days of the Engineer issuing a certificate of clearance of **Defect Liability-cum-Maintenance Period.**

### 55. Substantial completion

**55.1** The Engineer shall issue a substantial completion certificate if so requested by the contractor if the work is atleast 95% complete and the work has been executed to such an extent that it can be gainfully utilized by the Employer and remaining work is minor in nature not affecting gainful use of the work.

### 56. Defect Liability-cum-Maintenance period

**56.1** The Defect Liability-cum-Maintenance period shall be as defined in the Contract Data and Special Condition of Contract.

### 57. Final Account

**57.1.** The Contractor shall supply to the 'Engineer' a detailed account of the total amount that the Contractor considers payable under the Contract before the end of the Defects Liability Period. The 'Engineer' shall issue a Defect Liability Certificate and certify any final payment that is due to the Contractor within 56 days of receiving the Contractor's account if it is correct and complete. If it is not, 'Engineer' shall issue within 56 days a schedule that states the scope of the corrections or additions that are necessary. If the Final Account is still unsatisfactory after it has been resubmitted, the Engineer shall decide on the amount payable to the Contractor and issue a payment certificate, within 56 days of receiving the Contractor's revised account.

**57.2** The contractor will submit the final bill of construction within 21 days of issue of Completion Certificate. The Engineer will process and pass the final bill within 21 days of the submission of final bill by the contractor.

## 58. Operating and Maintenance Manuals

**58.1** If "as built" Drawings and / or operating and maintenance manuals are required, the Contractor shall supply them by the dates stated in the Contract Data.

**58.2** If the Contractor does not supply the Drawings and/or manuals by the dates stated in the Contract Data, or they do not receive the Engineer's approval, the Engineer shall withhold the amount stated in the Contract Data from payments due to the Contractor.

## 59. Termination

**59.1** The Employer or the Contractor may terminate the Contract if the other party causes a fundamental breach of the Contract.

**59.2** Fundamental breaches of the Contract shall include, but shall not be limited to, the following:

(a) the Contractor stops work for 28 days when no stoppage of work is shown on the current Programme and the stoppage has not been authorized by the Engineer;

(b) the 'Engineer' instructs the Contractor to delay the progress of the Works and the instruction is not withdrawn within 56 days.

(c) the Contractor is declared as bankrupt or goes into liquidation other than for approved reconstruction or amalgamation;

(d) the Engineer gives Notice that failure to correct a particular Defect whether pertaining to construction work or pertaining to **Defect Liability-cum-Maintenance Period** is a fundamental breach of the Contract and the Contractor fails to correct it within a reasonable period of time determined by the Engineer;

(e) the Contractor does not maintain a Security, which is required;

(f) the Contractor has delayed the completion of the Works by the number of days for which the maximum amount of liquidated damages can be paid, as defined in clause 44.1;

(g) the Contractor fails to provide insurance cover as required under clause 13;

(h) if the Contractor, in the judgment of the Employer, has engaged in the corrupt, fraudulent or coercive practice in competing for or in executing the Contract. For the purpose of this clause, "corrupt practice" means the offering, giving, receiving, or soliciting of anything of value to influence the action of a public official in the procurement process or in Contract execution. "Fraudulent Practice" means a willful misrepresentation or omission of facts or submission of fake/forged documents in order to induce public official to act in reliance thereof, with the purpose of obtaining unjust advantage by or causing damage to justified interest of others and/or to influence the procurement process to the detriment of the Government interests. And, this includes collusive practice among Bidders (prior to or after bid submission) designed to establish bid process at artificial non-competitive levels and to deprive the Employer of the benefits of free and open competition. "Coercive practice" means the act of obtaining something, compelling an action or influencing a decision through intimidation, threat or the use of force directly or indirectly, where potential or actual injury may befall upon a person, his/ her reputation or property to influence their participation in the tendering process.

(i) any other fundamental breaches as specified in the Contract Data.

**59.3** When either party to the Contract gives notice of a breach of contract to the 'Engineer' for a cause other than those listed under Sub Clause 59.2 above, the 'Engineer' shall decide whether the breach is fundamental or not

**59.4** Notwithstanding the above, the Employer may terminate the Contract for convenience.

**59.5** If the Contract is terminated, the Contractor shall stop work immediately, make the Site safe and secure, and leave the Site as soon as reasonably possible.

## 60. Payment upon Termination

**60.1** **(i)** If the Contract is terminated because of a fundamental breach of Contract by the Contractor, the Engineer shall issue a certificate for the value of the work done, less liquidated damages, less advance payments received up to the date of the issue of the certificate and less the percentage to apply to the value of the work not completed, as indicated in the Contract Data. If the total amount due to the Employer exceeds any payment due to the Contractor, the difference shall be recovered from the Retention Money and Performance Security.

(ii) If the Contract is terminated because of a fundamental breach of contract by the Contractor due to non-compliance of the requirements of clause 32 of GCC regarding Defect Liability-cum-Maintenance Period, the Engineer will assess the cost of having the defect corrected. If the total amount due to the Employer exceeds any payment due to the Contractor,the difference shall be recovered from the Security Deposit and Performance Security. If any amount is still left un-recovered, it will be recovered from any dues payable to the Contractor from any other State Government works including State Public Sector works executed by the Contractor. If any amount still remains unrecovered, it shall be recovered as arrears of land revenue.

**60.2** If the Contract is terminated at the Employer's convenience or because of a fundamental breach of Contract by the Employer, the 'Engineer' shall issue a certificate for the value of the work done, the cost of balance material brought by the contractor and available at site, the reasonable cost of removal of Equipment, repatriation of the Contractor's personnel employed solely on the Works, and the Contractor's costs of protecting and securingthe Works and less advance payments received up to the date of the certificate, less other recoveries due in terms of the contract and less taxes due to be deducted at source as per applicable law

## 61. Property

**61.1** All materials on the Site, Plant, Equipment, Temporary Works and Works are deemed to be the property of the Employer, if the Contract is terminated because of a Contractor's default to make recoveries.

## 62. Release from Performance

**62.1** If the Contract is frustrated by the outbreak of war or by any other event entirely outside the control of the Employer or the Contractor, the Engineer shall certify that the Contract has been frustrated. The Contractor shall make the Site safe and stop work as quickly as possible after receiving this certificate and shall be paid for all work carried out before receiving it and for any work carried out afterwards to which a commitment was made.

**62.2** If a Contractor dies during the currency of the Contract or becomes permanently incapacitated, and his/her legal heirs are not willing to complete the Contract, the Contract shall be closed without levying any damages/compensation as provided for in clauses 44 and 60 of GCC.

However, if the nominee expresses his/her intention to complete the balance work and the competent authority is satisfied about the competence of the nominee, then the competent authority shall enter into a fresh agreement for the remaining work strictly on the same terms and conditions, under which the Contract was initially awarded.

## Part-II Special Conditions of Contract

### 63. Agreement:

Gurugram Metropolitan Development Authority shall execute an Agreement with the successful bidder as per the terms and conditions of the Bid document. The conditions stipulated in the agreement must be strictly adhered to and any violation of any of the conditions will entail termination of the contract without prejudice to the rights of Gurugram Metropolitan Development Authority. In such a case, Gurugram Metropolitan Development Authority has the right to invoke Performance Bank Guarantee and further right to terminate the entire or part of the contract by giving one-month notice.

### 64. Delivery, Annual Maintenance Contract (AMC)

#### 64.1 Delivery of Supply items:

The delivery of supply items as per SOR are required to be delivered within period and at location to be provided by the Bidder. Watch and ward shall be the responsibility of the bidder. The bidder shall take the required items for installation at sites indicated in Annexure A & B under Section 8 of Bid Document.

Bidder will be given stipulated time for installation & commissioning to be decided in mutual consultation with GMDA. For items that cannot be installed for want of site readiness or as per the decision of GMDA, the same have to be returned to the store maintained by the bidder. On issue of PAC and completion of warranty period of one year the bidder shall hand over the Equipment in working condition to GMDA. Bidder shall continue to maintain the store during AMC and O&M phase of 5 Years post completion of warranty period.

#### 64.2 Delivery of services:

Delivery of services and documents shall be made by the successful bidder in accordance with the terms specified by "Gurugram Metropolitan Development Authority Gurugram" as per the Milestones mentioned under Clause 26.0.

#### 64.3 Long Term Maintenance Support / Annual Maintenance Contract (AMC):

64.3.1 Agency/Bidder shall provide maintenance support after successful completion of the warranty obligations and issue of Final Acceptance Certificate (FAC) for a minimum period of 5 years as mentioned in bid document The long term maintenance support shall be comprehensive and include all hardware and software of equipment etc . supplied against this contract. GMDA should extended the benefits of software update /up-grades made by OEM on the system from time to time to improve performance. During this period the scope of work as mentioned in Section-II & its sub-clauses, above, will be applicable.

64.3.2 Agency/Bidder shall be paid as per rates mentioned in bid document towards Long Term Maintenance Support, to undertake repairs/replacements of all type of module card assembly subassembly and update upgrade of software released during this period and/or which may fail in the system after the warranty. AMC would have to be valid for minimum period of 5 years after the warranty. In case a Agency/Bidder quotes AMC rates lower than the rates mentioned in bid document, and in case he wins the contract, his project cost will be reduced by differential AMC cost & he will be paid accordingly. However, if the AMC rates quoted are higher than the rates mentioned in bid document, his project cost will be enhanced arithmetically and proportionately by the differential AMC cost for the evaluation purpose, & he will be paid as per the AMC rates quoted by him.

64.3.3 Separate agreement for AMC after warranty period shall be entered with bidder by GMDA (if required). A fresh Bank Guarantee for a value of 10% of the value of the AMC contract's annual value valid for a period of 4 months beyond the AMC period from the date of issue of LOA shall be required to be submitted by Bidder for due fulfilment of long-term maintenance support obligation.

64.3.4 Quarterly payment for AMC Charges would be made by GMDA after successful completion of AMC Services of that quarter on the certificate submitted by bidder & approved by concerned GMDA representative

## 65. Technical Support Services & Service Level Agreement (SLA):

### 65.1 Technical Support Services

**65.1.1** General

Detailed description of support methodology shall be given by the Bidder. This should include information about:

a) Helpdesk/Call Centre management
b) Support levels and functions
c) Locations
d) Types of Support

**65.1.2** Version support

a) AMC support incudes all versions updates and upgrades.

**65.1.3** Software Support Service

**Inclusions:**

The support for software to be provided by the supplier will include, at no additional cost to GMDA, the following services:

A) The provision of new updates (eg. Patches, firmware, etc) for the equipment.
B) Delivery of:
i) Updates urgently in response to any fault resolution and/or major software security vulnerabilities as defined by the customer or other bodies as deemed appropriate by GMDA.
ii) Updates on a regular basis with respect to improvements, general security issues, and/or bug corrections.
C) Ensuring that new updates are compatible with existing software patches.
D) Verifying of solutions (where possible to reduce) within the maintenance or correction packages delivered by supplier for faults reported by the customer, to be performed jointly with GMDA.
E) Basic testing of updates to be performed jointly with GMDA.
F) Providing remote access diagnostics and fault resolution.
G) All applications to be supplied should be state of art and must not be N-1 version (N being latest version). The applications must be supported at least for 3 years from the date of supply, without impacting any SLAs.
H) It should be possible to forklift (port) all the customizations in version upgrade without requirement of re-writing the existing customizations.
I) Providing GMDA with information about any updates immediately upon availability. Such information must include:

i) The content

ii) Nature of improvement with any feature definition
iii) Impact to the existing system supplied by the supplier to GMDA
iv) A schedule of availability of each new update;
v) Any dependencies on third party systems or software citing relevant versions, levels and hardware or software configuration requirements;
vi) Any revised documentation; and
vii) Any other information which will enable GMDA to determine the feasibility to skip the updates or to wait for the next upgrade for the systems.

J) Ensuring that installation of any Update will not cause and unplanned fault, service outage or service degradation (effect to the system) and will be carried out by the supplier at no additional cost to GMDA.

K) Constantly review the latest security patches available and recommend such security patches to be implemented.

- Software Update Rejected
  If GMDA decides not to implement a new update (maintenance packages or emergency corrections) for any reason, then:
  a) The supplier is required to provide support for the then current version of software being deployed for GMDA.
  b) The parties must discuss the consequence of GMDA not installing such update.
- Software Updates Accepted
  If GMDA decides to implement a new update, then:
  a) If the update fails to perform in accordance with the specifications during operation in GMDA's network then GMDA reserves the right to revert to the previous version. The supplier must continue to support that previous version;

  b) The supplier must assist GMDA in any post-implementation monitoring which GMDA may conduct after a new update; and

  c) The supplier shall provide the relevant feature description pertaining to the new features or enhancements introduced by the updates.

**65.1.4** Operations post UAT, including enhancements required:

The system integrator/integrators need to manage the solution for 1 year along-with additional network integration required (if any) by users, post UAT, after which GMDA may takeover L1/L2 operations.
Following are key tasks to be carried out during 1 year operations:

i. User ID creation with privileges.
ii. Platform upkeep, regular version upgrades, updates, will form part of deliverable scope.
iii. All housekeeping activities such as regular system health check, security check, backup etc. will be part of the responsibility of operations.

**65.1.5** Support overview

1. The Bidder will deploy qualified and trained manpower on site for day to day operations and AMC support to keep solutions in working condition.

2. Operations personnel shall have to operate from SCADA sites/Control centre sites of GMDA. SMEs support can be taken as and when required.

3. All incident time should be with system time stamp and hardware uptime report will be provided at the end of month.

**65.1.6** Onsite/Offsite Engineer Support by OEM

The enhancement is defined as addition/deletion/modification of existing reports, dashboards, correlation rules etc. Enhancements will be incremental requirements post UAT. Successful Bidder shall provide engineer as per demand on time to time at the locations approved by GMDA.

**65.1.7** Responsibility Matrix of Support Engineer from OEM:

a. Engineer will be responsible for project enhancements/customizations based on user's requirement post UAT & roll-out
b. Enhancement work would include change request, customization, and new report development.
c. Engineer will document the design and customization and submit for approval.
d. Engineer will implement customizations and roll out. Will also hand hold users for training.
e. Onsite Engineer will be available for onsite troubleshooting, which requires intervention by L2/L3 engineer, in coordination with backend team of OEM for resolution.
f. In case of critical issues related to system usability, engineer has to report at GMDA site within 24 hours. In other cases, requirement should be fulfilled within a week period.

**65.1.8** General Terms and Conditions Applicable

i) The selection of the Engineer will be done by Contractor jointly with GMDA. GMDA will nominate their officer/s for interviewing the candidates.

ii) The above support offerings will be on 24x7x365 basis.

### 65.2 Service Level Agreement (SLA)

The purpose of this Service Level Agreement (hereinafter referred to as SLA) is to clearly define the levels of service which shall be provided by the Bidder to GMDA for the duration of this Contract.
The benefits of the SLA are as follows:

The SLA has been logically segregated in the following categories:

1. IT and Non IT Infrastructure/Field Equipment's service levels
2. Manpower availability service levels
3. Help desk service levels

The GMDA shall regularly review the performance of the services being provided by the Bidder and the effectiveness of this SLA. It would also form a baseline for the GMDA to compute payment for the Agency/Bidder. The State designated Agency will also review the SLA periodically.

GMDA will impose a fine on the Bidder for not meeting the **Implementation Service Level Agreements (SLAs)** and **Post-Implementation SLAs** as detailed below.

### 65.3 SLAs during Implementation period:

These SLAs shall be used to evaluate the timelines for completion of deliverables that are listed in the deliverable. These SLAs will be applicable for commissioning of the project (upto GO-LIVE). For delay of every week in completion & submission of the deliverable mentioned in the proposal, the Bidder would be charged with penalty as follows:

**Implementation phase related performance levels:**

| Measurement | Definition | Target | Penalty |
|---|---|---|---|

| Manpower Deployment | | | |
|---|---|---|---|
| Team mobilization and commencement of work | Agency/Bidder is expected to mobilize project team for commencement of work.<br>Commencement of work would mean reporting and availability of Agency/Bidder's resources (Key personal as per the Bid requirement) at the GMDA office for the project within defined period of 15 days. | Within 15 days of signing of Contract Agreement | Delay beyond 15 calendar days may lead to = 0.5% of the project cost excluding O&M cost, every 15 days or part thereof. |

| **Delay in execution of work (in Weeks).** | **Penalty value** |
|---|---|
| **Per Week** | 0.5% of the Un-commissioned part of Project cost (Contract Value) excluding O&M cost. |
| Maximum | 10% of the total Project cost (Contract Value) excluding O&M cost. In case of delay in execution goes beyond three months from the scheduled date of Go-live then GMDA may terminate the contract. |

In case, the Agency/Bidder reaches maximum of penalty at any point of time, GMDA reserves the right to invoke the termination clause.
In case any service for integration is not ready from GMDA, the Contractor will integrate the same within two months from the date from which the same will be made available within validity of project and O&M period.

**65.4 Post-Implementation SLAs:**

a. These SLAs shall be used to evaluate the performance of the services on monthly basis but penalties would be levied for cumulative performance for the quarter basis.
b. Penalty levied for non-performance as per SLA requirements shall be deducted from the payment due to the Agency/Bidder. If the penalties amount exceeds **25%** of the cost in a year then GMDA will have the right to terminate the agreement.
c. The SLA parameters shall be measured for each of the sub systems" SLA parameter requirements and measurement methods, through appropriate SLA Measurement tools to be provided by the Agency/Bidder and audited by GMDA for accuracy and reliability. The Agency/Bidder would need to configure the SLA Measurement Tools such that all the parameters as defined under SLA matrix given below. Post implementation SLAs, should be measured and appropriate reports be generated for monitoring the compliance.
d. In the event of non-compliance, GMDA reserves the right to invoke the termination clause. All the activities and obligations pursuant to the termination, shall be as per Termination Clause as provided in this Bid document.
e. For purposes of the SLA, the definitions and terms as specified in the document along with the following terms shall have the meanings set forth below:

- **"Total Time"** - Total number of hours in the quarter (or the concerned period) being considered

for evaluation of SLA performance.

- **"Uptime"** – Time period for which the specified services/ outcomes are available in the period being considered for evaluation of SLA. Formulae for calculation of Uptime: *Uptime (%) = {1-[(Downtime)/(Total time- scheduled maintenance time)]}*100*
- **"Downtime"-** Time period for which the specified services/ components/ outcomes are not available in the concerned period, being considered for evaluation of SLA, which would exclude downtime owing to Force Majeure & Reasons beyond control of the successful bidder.
- **"Scheduled Maintenance Time" -** Time period for which the specified services/ components with specified technical and service standards are not available due to scheduled maintenance activity. The successful bidder is required to take at least 10 days prior approval from GMDA for any such activity. The scheduled maintenance should be carried out during non-peak hours (like post mid-night, and shall not be for more than 4 hours. Such planned downtime would be granted max 6 times a year.
- **"Incident" -** Any event / abnormalities in the service being rendered, that may lead to disruption in normal Operations and services to the end user.
- **"Response Time" -** Time elapsed from the moment an incident is reported in the Helpdesk over phone or by any applicable mode of communication, to the time when a resource is assigned for the resolution of the same.
- **"Resolution Time" -** Time elapsed from the moment incident is reported to Helpdesk either in person or automatically through system, to the time by which the incident is resolved completely and services as promised are restored.

### 65.6 Measurement of SLA:

The SLA metrics provided specifies performance parameters as baseline performance, lower performance and breach. All SLA calculations will be done on quarterly basis. The SLA also specifies the liquidated damages for lower performance and breach conditions.

Payment to the Bidder is linked to the compliance with the SLA metrics. The matrix specifies three levels of performance, namely,

1. The Bidder will get 100% of the Contracted value if all the baseline performance metrics are compiled and the cumulative credit points are 100.
2. The Bidder will get lesser payment in case of the lower performance. (For e.g. if SLA point score is 80 then the Agency/Bidder will get 20% less on the quarterly payment – The formula calculating the deductions is "(100 – SLA Point Score)%").
3. If the performance of the Bidder in respect of any parameter falls below the prescribed lower performance limit, debit points are imposed for the breach.
4. The credit (+) points earned during the quarter will be considered for computing penalty. The quarterly payment shall be made after deducting the liquidated damages as mentioned above.

i. The aforementioned SLA parameters shall be measured as per the individual SLA parameter requirements and measurement methods, through appropriate SLA Measurement tools to be provided by the Bidder and approved and audited by GMDA or its appointed Consultant for accuracy and reliability.

ii. GMDA shall also have the right to conduct, either itself or through any other agency as it may deem fit, an audit / revision of the SLA parameters.

iii Total liquidated damages to be levied on the Bidder shall be capped at 10% of the total contract value. However, GMDA would have right to invoke termination of the contract in case the overall liquidated damages equal 10% of total contract value. Liquidated damages to be levied during Post Implementation period shall be capped at 10% of the OPEX value. GMDA would also have right to invoke termination of contract in case cumulative debit point (breach points) are above twenty-five in two consecutive quarters.

### 65.7 SLA Matrix for Post Implementation SLAs:

| S.No | Performance Area | Baseline | Lower performance | Breach |
|---|---|---|---|---|

| | | Metric | Points | Metric | Points | Metric |
|---|---|---|---|---|---|---|
| **1. System Performance (includes any user/system application related to the project)** | | | | | | |
| 1 | Overall System availability – | 99% | 20 | >= 96.5 % to <99% | 10 | < 96.5 % |
| 2 | Reports Generation Response Time (Alerts/MIS/Logs etc.) | Simple query - < 5 secs<br><br>Medium complexity query - <20 secs<br><br>High Complexity query - < 40 sec | 5 | Simple complexity Query = 5.01 to 10 secs<br><br>Medium complexity query = 20.01 to 40secs<br><br>High Complexity query = < 40.1 sec to 80 secs | 2.5 | Simple complexity Query = > 10 secs<br><br>Medium complexity query = >40 secs<br><br>High Complexity query = > 80 secs |

**Explanation Notes for SLA Matrix**

**A) System Application Availability**

| | |
|---|---|
| **Definition** | Application availability refers to the total time when the Application is available to the users for performing all activities and tasks. |
| **Measurement of Service level Parameter** | [(Total Uptime of the Application in a quarter) / (Total Time in a quarter)]*100 |

**B) Issue Resolution**

| | |
|---|---|
| **Explanation** | **Issue Resolution SLA shall monitor the time taken to resolve a complaint / query after it has been reported by GMDA/End user department to the Bidder.** |
| **Service Level Requirement** | Different Issues/Queries shall be classified as in following three categories as defined above.<br>**Critical** : Issue that impacts more than one production services / is raised by higher management / is impacting high importance areas<br>**Medium**: Issue that doesn't impact more than one production services but has a potential to impact or may get escalated to top management if not resolved quickly<br>**Low**: Upgrades, shifting, preventive maintenance. Issues which don"t have impact on services. |

**Security Breach SLA:**

**Note** – This SLA for Security Breach is applicable over and above the SLAs mentioned in above Table.

| | |
|---|---|
| **Service Level Requirement** | Security compliance of the system should be 100% |
| **Measurement of Level Service Para Meter** | Any reported security breach shall be logged into the SLA Management solution as a security breach. |
| **Penalty for non-achievement of SLA Requirement** | For every security breach reported and proved, there shall be a penalty of<br>***INR 1,00,000/-*** or lead to termination of contract. |

**65.8 Penalties shall not be levied on the Bidder in the following cases:**

a. In case of a force majeure event affecting the SLA, which is beyond the control of the Agency/Bidder. Force Majeure events shall be considered in line with the Force Majeure clause mentioned in this Bid document.

b. Theft cases by default/ vandalism would not be considered as "beyond the control of Bidder". Hence, the Bidder should be taking adequate anti-theft measures, spares strategy, Insurance as required to maintain the desired required SLA.

## 66. Provisional Acceptance Certificate (PAC)

On Installation of the equipment in the complete system and after conclusion of Site Acceptance Testing, and its Integration with CIWMS and ICCC of GMDA, Provisional Acceptance Certificate (PAC) will be issued by GMDA, so that trial run/ field trials can be started. Part PAC may be issued for work commissioned & brought in service/commercial use. PAC will not be held back for want of minor deficiencies not affecting the functioning of the equipment & services. Deficiencies, if any, pointed at the time of issuance of PAC, will be rectified by the contractor within one month during maintenance period. System shall be considered commissioned and Go-Live only after issue of final PAC for the entire system.

## 67. Final Acceptance Certificate (FAC)

The Final acceptance of the works completed shall be considered after successful completion for a period of 12 months after issue of PAC (i.e. the date of Final Acceptance shall be reckoned from the date of issue of the last equipment installed & service enabled) provided in any case that the contractor has complied fully with his obligations in respect of each item under the contract. The system should work for one quarter (90 days) without any problem and within defined SLA's. The Final Acceptance Certificate shall be signed by contractor & shall be validated & signed by GMDA. Notwithstanding the issue of Final Acceptance Certificate, the contractor and the purchaser shall remain liable for fulfillment of any obligation incurred under the provision of the contract prior to the issue of Final Acceptance Certificate which remains unperformed at the time such certificate is issued and for determining the nature and extent of such obligation the contract shall be deemed to remain in force between the parties hereto.

## 68. Force Majeure:

If during the Agreement, the performance in whole or in part, by either party, of any obligation under this is prevented or delayed, by reason beyond the control of the parties including war, hostility, acts of the public enemy, civic commotion, sabotage, Act of State or direction from Statutory Authority, explosion, epidemic, quarantine restriction, strikes and lockouts (as are not limited to theestablishments and facilities of the parties), fire, floods, earthquakes, natural calamities or any act of GOD (hereinafter referred to as EVENTS), provided notice of happenings of any such EVENT is given by the affected party to the other, within twenty one (21) days from date of occurrence thereof, neither party shall have any such claims for damages against the other, in respect of such non-performance or delay in

performance. Provided service under this Agreement shall be resumed as soon as practicable, after such EVENT comes to an end or ceases to exist.

In the event of a Force Majeure, the affected party will be excused from performance during the existence of the Force Majeure. When a Force Majeure occurs, the affected party after notifying the other party will attempt to mitigate the effect of the Force Majeure as much as possible. If such delaying cause shall continue for more than sixty (60) days from the date of the notice stated above, the party injured by the inability of the other to perform shall have the right, uponwritten notice of thirty (30) days to the other party, to terminate this Agreement. Neither party shall be liable for any breach, claims, damages against the other, in respect of non-performance or delay in performance as a result of Force Majeure leading to such termination.

## 69. Payment Terms:

All the payments to the successful bidder shall be made as per terms of payment and schedule as follow:

**69.1** 5% payment of value of Supply items of the LOA/PO/ shall be made by GMDA on submission of Design and Drawing and approval of final plans and specifications.

**69.2** 60% payment of the value of the supply items against LOA/PO would be made by GMDA on receipt of material by the consignee (at site /the stores, to be decided by GMDA) duly inspected and on submission of the following documents subject to any deductions or recovery which GMDA may be entitled to make under the contract:

i. Invoice.
ii. Delivery Challan.
iii. Excise Gate pass/Excise Invoice or Equivalent.
iv. Packing list.
v. Purchaser / GMDA's Inspection certificate.
vi. Consignee receipt.
vii. Warranty certificate of OEM.
viii. Insurance certificate
ix. Inspection certificate duly signed by the firm certifying that equipment / materials / hardware / software licences etc. being delivered are new and conform to technical specifications as per tender.
x. Test results as per FAT from OEM duly certified for all equipment's in compliance with tendered specification & accepted by Contractor
xi. The breakup of taxes has to be furnished and same should be clearly reflected in the bills.

**69.3** 30% payment of value of Supply items of the LOA/PO shall be made by GMDA on Complete testing of Centralized Integrated Water Management System (CIWMS) including integration with Field devices and demonstration of various parameters to be achieved. Also includes integration with existing CIWMS system and issue of PAC (Go live) and start of Warranty Period including Training and Handholding.

**69.4** **5**% payment of value of Supply items of the LOA/PO/ shall be made by GMDA on issue of Final Acceptance Certificate Testing (FAC) for the entire project. The Performance Bank Guarantee shall be released.

**Note: The breakup of taxes has to be furnished and same should be reflected in the bills.**

**69.5** Year wise Payment of Comprehensive Maintenance/Annual Maintenance Contract (AMC) as defined under "**Special Conditions for comprehensive maintenance contract"** shall be made on quarterly basis.

a) All the claims will be raised by the Bidder and the payments will only be made through cheque/ Online payment to Bidder bank account.

b) In the event of premature termination of the Agreement prior to the completion of contract, the Bidder shall be eligible to receive the payment only up to the milestone which have been completed.

## 70. Labour Clause:

70.1 Contract Labour (Regulation and Abolition act 1970): The Tenderer(s) should specifically note that the successful tenderer(s) shall have to strictly comply with the entire statutory requirement under the provision of the Contract Labour (Regulation and Abolition) Act 1970 and with the Haryana State Contract Labour (Regulation and Abolition) Rules 1970 and indemnify the Corporation against any claim(s) whatsoever. Successful Tenderer(s) should obtain Registration Certificate from Labour Commissioner.

**70.2** Even though the Tenderer(s) takes all the precautionary measures and by chance any workman is injured or dies due to negligence or otherwise, the Tenderer(s) will be responsible for the claims of damages by the workman or his legal heirs.

## 71. Limitation of Liabilities:

The maximum liability of the tenderer to any loss/damages to GMDA including Liquidity damages and performance guarantee shall be limited to 100% of value of contract.

## 72. Suspension of work:

The Agency/Bidder shall, on receipt of the order in writing of the Engineer-in-Charge, (whose decision shall be final and binding on the contractor) suspend the progress of the works or any part thereof for such time and in such manner as the Engineer-in-Charge may consider necessary so as not to cause any damage or injury to the work already done or endanger the safety thereof for any of the following reasons:

(a) on account of any default on the part of the Agency/Bidder

or;

(b) for proper execution of the works or part thereof for reasons other than the default of the Agency/Bidder; or

(c) for safety of the works or part thereof.

The Agency/Bidder shall, during such suspension, properly protect and secure the works to the extent necessary and carry out the instructions given in that behalf by the Engineer in- Charge.

**Contract Data to General Conditions of Contract**

**1.** The Employer is
Name: Chief Executive Officer, GMDA *Address: Plot No.03, Sector-44, GMDA office, Gurugram 122003 (Haryana)*
**2.** The Authorized Representative/Engineer-in-charge *is Advisor, Smart City Division*, GMDA.
**3.** Address:
**4.** The Intended completion date for the whole of the works is 12 months (Twelve months) after start of work.
**5.** The site is located at: Gurugram, As per Annexure attached.
**6.** The start date shall be after Signing of Agreement and deposit
**7.** **Overall Milestones to be achieved:**

| Item # | Milestone | Days |
|---|---|---|
| | Issuance of Letter of Award, Signing of Agreement with successful Bidder | T0 |
| M1 | Conducting Survey and Providing work plan for providing Centralized Integrated Water Management System (CIWMS) as per Scope of work and submission and approval of Software Requirement Specifications (SRS) etc. | T0 + 30 days=T1 |
| M2 | Supply and Installation of CIWMS software on GMDA Servers and proto type demonstration of functions etc. | T1+ 90 days = T2 |
| M3 | Supply and Installation of items related to monitoring and control of WTP Basai, WTP Chandu, Booster Stations and integration with the CIWMS Software as per Scope of Work. | T1 + 90 days= T3 |
| M4 | Supply and Installation of items related to monitoring of Water Quality at WTP Basai, WTP Chandu, and integration with the CIWMS Software as per Scope of Work. | T1 + 90 days= T4 |
| M5 | Supply and Installation of field items for 1300 mm Water Pipe line of GMDA along with Pre-fabricated RCC / PCC Chambers as per site requirement and associated Civil work and integration with the CIWMS Software as per Scope of Work. | T1 + 120 days= T5 |
| M6 | Complete testing of Centralized Integrated Water Management System (CIWMS) including integration with Field devices and demonstration of various parameters to be achieved. Also includes integration with existing CIWMS system. and issue of PAC (Go live) and start of Warranty Period including Training and Handholding. | T5 + 60 days = T6 |
| M7 | Operation and Maintenance (All items) | T6 + 05 years |

***T0 is date 15 days from the date of issue of Issuance of Letter of Award, Signing of Agreement with successful Bidder***

**8. Technical Personnel for work and operation**:

| | Personnel | Qualification | Minimum Numbers |
|---|---|---|---|
| 1 | Project Manager | BE. Electrical / Civil / EC + 10 years Experience | 1 No. |
| 2 | Site Engineer | BE. Electrical / Civil / EC + 03 years Experience | 2 No. |
| 3 | IT & Networking Engineer | BE. (Computer/IT) + 3 Years Experience | 1 No. |
| 4 | Quality Surveyor | BE. Electrical / Civil / EC + 3 Years Experience or Dip. Electrical + 7 Years Experience | 1 No. |
| | Total | | 5 Nos. |

Note: - In case, the above qualified personnel are not deployed the following deduction shall be made per month from the payment due to the contractor

| SN | Personnel | Salary |
|---|---|---|
| 1 | Project Manager | Rs.75,000/- per month |
| 2 | Site Engineer | Rs.50,000/- per month |
| 3 | IT & Networking Engineer | Rs.50,000/- per month |
| 4 | Quality Surveyor | Rs.40,000/- per month |

The employer reserves the right to employ any or all the above personal as per requirement given above irrespective of above deductions made from the payments due to the contractor.

**9. Amount of liquidated damages for delay in completion of works:**

- **For whole of work:** (1/2000) the of the initial Contract price rounded off to the nearest thousand per day.
- **For non-achievement of milestone** (wherever specified in terms of Contract Data): (1/2000) th of the initial Contract price rounded off to the nearest thousand per day.
- **Maximum limit of liquidated damages for completion of work**: 10 (Ten) percent of the balance amount of work.

**9.** **Retention Money:** The proportion of payments retained (Retention money) shall be 6% from each bill subject to maximum of 5% of Final contract price.

**10.** The standard form of Performance Security acceptable to the Employer shall be an unconditional Bank Guarantee of the type as presented in the Bidding document, or Fixed Deposit Receipt from a scheduled Commercial bank. (refer Clause 51).

**11.** The **Maintenance –cum-Defect Liability Period** shall be Five (05) years from the date of completion wherein payment for DLP period shall be made as per payment schedule of the contract agreement/ Bid Document (refer Special conditions for Comprehensive Maintenance Contract).
During 'Maintenance-cum-Defect Liability Period' no extra payment shall be made to contractual agency on account of repair / replacement of items / material (including the cost of material / machinery / Labour etc. what so ever), if required any. The Bidder shall deploy following **Minimum Technical**

**Personnel for Operation & Maintenance for 5 Years** for which no extra payment shall be made by GMDA.

| | **Personnel** | **Qualification** | **Minimum Numbers** |
|---|---|---|---|
| 1 | Maintenance Manager | BE. Electrical / Civil / EC + 10 years Experience | 2 No. |
| 2 | Site Maintenance Engineers | BE. Electrical / Civil / EC + 03 years Experience | 4 No. |
| 3 | IT & Networking Engineer | BE. (Computer/IT) + 7 Years Experience | 1 No. |
| | **Total** | | **7 Nos.** |

| | **Nature of Advance** | **Amount** | **Conditions to be fulfilled** |
|---|---|---|---|
| I | Mobilization | Maximum 5 % of the contract price | An interest-bearing mobilization advance upto the extent of 5% of contract value (or such limit as prescribed) may be given to contractors for works costing more than Rs.2.00 crores, against unconditional and irrecoverable bank guarantees to be furnished by the contractor equal to the amount of advances paid from time to time. Interest @Marginal Cost of Funds based Lending (MCLR) of SBI prevalent at the time of tender per annum shall be charged on mobilization advance given to the contractor<br>The recovery of the mobilization advance together with interest shall be done through percentage deductions from interim/running payments, in the manner prescribed in the contract. It shall be desirable to recover the total amount of mobilization advance alongwith interest within 80 % of thetime stipulated for completion. The mobilization bank guarantee shall be released after the recovery of full mobilization advance, including interest thereon.<br>In case, of slow progress of work, the 'Engineer' comes to a conclusion that the total amount of mobilization advance with interest cannot be recovered by the time 80% of stipulated time is over, the bank guarantee(s) furnished by the contractor may be encashed.<br>If the tender document so provides, th e contractor will have the option to furnish mobilization bank guarantee in parts and on recovering of ¼ , ½, ¾ and full advance, proportional bank guarantees can be released. |
| II | Secured advance for non-perishable materials brought to site | 75% of Invoice value | In case the contractor requires an advance on the security of<br>materials brought to site, 'Engineer' may, on written request from the contractor, sanction the advance upto an amount 75% or as decided by the 'Engineer' of the |

| | | | |
|---|---|---|---|
| | | | value (as assessed by themselves) as stated in the Contract Data of such materials, provided thereof imperishable nature and that a formal agreement is drawn up with the contractors under which Govt. secures a lien on the materials and is safeguarded against losses due to the contractor postponing the execution of the work or misuse of the material and against the expense entailed for their proper watch and safe custody. If the material is fire prone or can be destroyed fully/partially on storage, it shall be desirable to have it first insured by the contractor. Cases in which a contractor, whose contract is for finished work, requires an advance on the security of materials brought to site. Divisional Officer may, on written request from the contractor, sanction theadvance upto an amount of 75% or as decided by the competent authority of the value (as assessed by themselves) of such materials, provided they are of an imperishable nature and that a formal agreement is drawn up with the contractor under which Government secures a lien on the materials and is safeguarded against losses due to the contractor postponing the execution of the work or misuse of the material and against the expense entailed for their proper watch and safe custody. If the materials is fire prone or can be destroyed fully/partially on storage, it shall be desirable to have it first insured by the contractor. Any secured advance should be settled / recovered within 3 months of its release.<br>Note : Such advance will not be given for sand, aggregate, GSBand stone metal etc.<br>The contractor will submit the bills for the material which secured advance is being claimed. |
| III | MachineryAdvance | Maximum 5 % of the contract price | For works costing more than Rs.10.00 crores another interest bearing machinery advance to a maximum of 5% of the contract price, depending on merits of the case, can be given against the new key construction equipment brought to the site and to be deployed on the work, if a written request is made by the contractor.<br>The advance shall be paid only upon the contractor furnishing (i) an affidavit that the machinery in question is free of any charge or hypothecation with any bank or financial institution: (ii) unconditional and irrecoverable bankguarantee(s) (iii) satisfactory proof of purchase/payment of the machinery, and (iv) a written undertaking that the equipment so purchased by him is required for use on the work in question, is fully serviceable shall work only on that job and shall not be removed from the site without obtaining written approval of the 'Engineer's . The recovery of machinery advance and the Interest @Marginal Cost of Funds based Lending (MCLR) of SBI prevalent at the time of |

| | | | |
|---|---|---|---|
| | | | tender per annum shall be charged. against the machinery advance given to the contractor.<br>The recovery of the machinery advance together with interest shall be done through percentage deductions from interim/running payments, in the manner prescribed in the contract. It shall be desirable to recover the total amount of machinery advance alongwith interest within 80% of the time stipulated for completion. The mobilization bank guarantee shall be released after the recovery of full machinery advance, including interest thereon.<br>The bank guarantee shall be unconditional, requiring the bank to pay the beneficiary the sum specified in the guarantee on the first demand and without demur, and without reference to the party on whose behalf it has been issued, notwithstanding any dispute or disagreement that might have arisen between the employer and the contractor. The form of bank guarantee shall be prescribed by the departments.<br>It shall be the duty of the 'Engineer' to obtain independent confirmation about the genuinenessof the bank guarantees directly from the bank issuing them. Further, he shall keep them in safe custody and hand them over to his successor when a change of charge takes place. Details of bank guarantees shall be entered into a register which shall be reviewed every month to ensure timely action in respect of renewal of any guarantee, if required, before it expires. |
| | (The advance payment will be paid to the Contractor no later than 28 days after fulfillment of the above conditions) | | |
| | Always provided that the advance shall be completely repaid prior to the expiry of the original timefor completion pursuant to clauses 17. | | |
| | The secured advance shall be repaid from each succeeding monthly payments to the extent materials [for which advance was previously paid pursuant to Clause 51.4 of G.C.C.] have been incorporatedinto the Works. | | |

**12.** The period for setting up a field laboratory with the prescribed equipment is **28** days from the date of notice to start work. **Not applicable.**

**Section 4**
**Project Summary, Scope of work & Technical Specifications**
**Table of Contents**


| | |
|---|---|
| 1.0 | Project Summary |
| 2.0 | Centralized Integrated Water Management System (CIWMS) |
| 3.0 | Scope of work |
| 4.0 | Functional & Technical Requirements |
| 5.0 | IT Solutions / Infrastructure for CIWMS |
| 6.0 | Documents to be submitted by the Contractor |
| 7.0 | Tests and Inspection |
| 8.0 | Additional Conditions for Equipment Provided. |
| 9.0 | Special Conditions for Comprehensive MaintenanceContract |

## 1.0 Project Summary:

GMDA plans to manage its water infrastructure efficiently and provide safe potable water to citizens deploying smart devices and managing from existing Integrated Command & Control Center (ICCC).
The smart equipment's will be installed to use the existing infrastructure to its optimum capacity. The city having total coverage of 338 Sq.km having source development in the southern area & there from water is supplied by pipeline network by means of U.G.T at the Sector level & intermediate Boosting station at the Zonal level. The use of Smart Flow meters/Flow Control Devices etc. is required for the conservation/qualification & Uniform distribution of water. This will also help in reducing the Non-Revenue Water (NRW).

## 1.1 Existing Water Supply Arrangement in GMDA Area:

The GMDA water supply system includes:

(a) Canal Raw Water System from Mundik canal through GWS & NCR Channel to store raw water in storage and sedimentation tanks having capacity with 3 days' storage.
(b) Water is treated at the Water Treatment Plants (WTP) (a) 300 MLD capacity having (ultimate capacity of 600 MLD) for future expansion at water works Chandu Budhera (b) 270 MLD capacity (ultimate capacity 360 MLD) at Water Works Basai to make it safe for human consumption. Treated water is transferred to bulk consumer like MCG, HSIIDC & Colonizers using main water pipes lines.
(c) Water storage facilities in Underground water tanks (UGT) at MCG & colonizers for half day storage.
(d) In order to optimize the infrastructure, the entire system is working on 24*7 with 2-hour detention time at boosting stations. Boosting stations have been constructed at Sector 16 & Sector 51 in order to provide water supply at adequate pressure in the Eastern part of the city which is having elevation difference of 30 to 40 Meters from the source of WTP.
(e) A pipeline network for distribution of water to the consumers (MCG, colonizers, industrial, commercial or institution establishments) and other usage points is based on Hazen William formula having residual pressure of 5.0M at the U.G.T point. Five main distribution pipe lines (i) 1600mm i/d Water Works Chandu Budhera to Sector-51, (ii) 900mm i/d from water works Chandu Budhera to Old Gurugram (iii) 1300mm i/d, Water Works Basai to Sector 16 Boosting Station (iv) 1200mm i/d Sec-14, 17, 21, 22, 23 & PalamVihar (v) 400mm i/d pipe lines go to different boosters Rajendra Park area, Daultabad, Dhanwapur across Railway line (Appendix-I).

## 2.0 Centralized Integrated Water Management System (CIWMS):

GMDA is establishing a centralized monitoring system for the potable water supply system within the GMDA notified area. The readings from various control & measuring systems installed within the City network shall be transferred on line to centralized monitoring facility at ICCC. This shall cover water lifted from various sources, water flow, water quality, energy consumption, pump efficiency, amount of clear water pumped and pressure optimization etc. The water infrastructure shall have centralized monitoring facility with GIS based visibility and control of assets, water related analytics, role-based dashboard, reports, water incident management, resource allocation and availability, water infrastructure, security, equitable distribution of water to all the consumers falling on the proposed line such as in the event of reduction of water from source of supply, the corresponding reduction is applicable through software control on all the flow control valves connected in the network etc.
The software control of devices shall be implemented on CIWMS software through Business Rules defined by GMDA time to time on all / selected devices.

## 2.1 Water Treatment:

Raw water(untreated) is collected from canal in the Two water treatment plants at Basai & Chandu-Budhera. Water treatment/purification is the process for removing suspended impurities and biological disinfection by chlorination that makes it suitable for human consumption or industrial use. The canal water is made available from Western Yamuna System having suspended impurities only the treatment is made in the plant through Rapids filters having flow rate of 6000Ltrs/$m^2$/Hr. The filtration, chlorination is done to disinfect the water. The minimum residual chlorine monitored at consumer end is 0.2 PPM. The treated water is transferred to the UGT across GMDA notified area through main pipelines/connecting pipelines conforming to IS 1152-2001.

At WTP Basai, no SCADA is existing and all functionalities shall be integrated with proposed CIWMS.

## 2.2 Water Distribution:

Water Distribution line are those conveying treated water to customers from a common source viz WTP (Chandu & Basai).The treated water is delivered to the UGT's of colonizers and MCG, & it meets the water quality standards required for human consumption .The water is made available to the residents of Gurugram by MCG/Colonizers with four stage pumping as indicated below:

One network may have several such service reservoirs like UGTs. The general topography of Gurugram is ascending from North-West to South-West and main water treatment plant is located in the north – west part and hence intermediate for South-East
Booster stations are provided in Sector 16 & 51within the distribution system to ensure that all areas of the distribution system have adequate sustained pressure of water.

## 3.0 Scope of work:

The Scope of work proposed in this tender is as follows:

a) Assessment, Site Survey & finalization of detailed project plan.
b) Supply, Installation & commissioning of related Field Equipment for remote management of Water supply system in GMDA area at UGT & Direct locations on 1300 mm water pipeline between WTP Basai to Boosting Station Sec 16 and further to Sector 17,18,19,24,25,25A,26,26A,27,28,29,39,32,39,43 etc.
c) Supply, Installation & commissioning of related Field Equipment for remote management of Water Supply Treatment plant (WTP) at Basai & Chandu Budhera.
d) Supply, Installation & commissioning of related Field Equipment for remote management of Water Supply from Booster Station Sector 16.
e) Integration with ICCC being established by GMDA with open APIs and create Standard Operating Procedures (SOPs) with complete logic to reduce human interference & implement the same.
f) This is a turnkey project & bidder is required to meet the end objective & take into consideration all the elements required but not specifically indicated in Bill of Quantity along with cost.
g) Integration of Flow meters installed for at WTP Chandu / Basai. For each Rising Mains/Boosting station Sector-16 with monitoring center.
h) Monitoring Flow meters at U.G.T of MCG / Colonizers/Industrial/Commercial & other usage points and integration with monitoring center and to have equitable distribution.
i) Supply, Installation, Integration & Commissioning of Centralized Integrated Water Management System (CIWMS) for water supply network showing the following parameters: -
   i.All the UGT have levels (in meter or % unit) connected with Ultrasonic Level sensors.

ii. Pump House data for WTP Chandu/Basai/Boosting Station Sector-16.
- Flow rate in M3/hr. of all Pumps.
- Energy meter data for each WTP/Booster station.
- KWh, KW, PF
- Running Amp. Of all pumps
- Voltage

iii. All Pump On/Off status

iv. Total Value of Flow.

v. Flow control devices connected with control center with PLC to control the flow from control center with logic to manage these flow control devices for equitable distribution.

j) Development/Customization, Testing and Deployment of CIWMS Installation, configuration & Integration of various field instruments and devices as well as water quality sensors and pump monitoring equipment.

k) Supply, Installation and Commissioning of CIWMS Gateway, IoT Gateway Device at various Data Acquisition (DAQ) locations and its configuration and integration with CIWMS.

l) Data acquisition and integration of Monitoring System with Integrated Command and Control Centre (ICCC) using open API's.

m) Operation, routine & preventive maintenance and Comprehensive Annual Maintenance Contract (AMC) for the period of Five years after completion of above-mentioned scope of work and issue of Final Acceptance Certificate (FAC).

n) Developing Standard Operating Procedures (SOPs) for operations management and other services.

o) Any other activities considered essential for efficient management of firms and motors etc. at water treatment plants, water supply, water quality & public feedback/information.

### 3.1 Inception Phase:

Bidder will be responsible for preparation of detailed project plan. The plan shall address at the minimum the following:

i. Define an organized set of activities for the project and identify the interdependence between them.

ii. Resource planning and loading for each phase/activity. This must also indicate where each resource would be based during that phase, i.e. onsite at the GMDA office or off site at Bidder premises.

iii. Establish and measure resource assignments and responsibilities

iv. Highlight the milestones and associated risks

v. Communicate the project plan to stakeholders with meaningful reports.

vi. Measure project deadlines and performance objectives.

vii. During the implementation of the project, Bidder shall present weekly reports. This report will be presented in the steering committee meeting to GMDA. The report should contain at the minimum the under mentioned:

a. Results accomplished during the period (weekly).

b. Cumulative deviations from the schedule date as specified in the finalized Project Plan.

c. Corrective actions to be taken to return to planned schedule of progress.

d. Proposed revision to planned schedule provided such revision is necessitated by reasons beyond the control of Bidder.

e. Support needed

f. Highlights/lowlights

g. Issues/Concerns

h. Risks/Show stoppers along with mitigation

Identify the activities that require the participation of client personnel (including GMDA, the Program Management Unit etc.) and communicate their time requirements and schedule early enough to ensure their full participation at the required time.

### 3.2 Requirement Phase:

Bidder shall perform the detailed assessment of the business requirements and IT Solution requirements as mentioned in this RFP. Based on the understanding and its own individual assessment, Bidder shall develop & finalize the System Requirement Specifications (SRS) in consultation with GMDA and its representatives. While doing so, Bidder at least is expected to do following:

a. Bidder shall conduct a detailed survey and prepare a gap analysis report, detailed survey report of the physical and field infrastructure requirements. Bidder shall duly assist GMDA in preparing an action plan to address the gaps which shall include all the items to be installed on the network which will not be limited to the items mentioned in BOQ.

b. Bidder shall study and revalidate the requirements given in the RFP with GMDA and submit as an exhaustive FRS document. Bidder shall develop the FRS and SRS documents.

c. Bidder shall develop and follow standardized template for requirements capturing and system documentation.

d. Bidder must maintain traceability matrix from SRS stage for the entire implementation.

e. Bidder must get the sign off from user groups formed by GMDA.

f. For all the discussion with GMDA team, Bidder shall be required to be present at GMDA office with the requisite team members.

g. Prior to starting the site clearance, Bidder shall carry out survey of field locations as already determined by GMDA.

h. Bidder shall directly interact with electricity boards for provision of mains power supply at all desired locations for field solution. GMDA shall facilitate the same. The recurring electricity charges will be borne by GMDA as per actual consumption.

i. Bidder to provide GSM Connectivity between the IoT Gateway site and ICCC/Data Centre of GMDA. charges for the same to be borne by GMDA.

### 3.3 Design Phase:

Bidder shall build the solution as per the Design Considerations detailed in RFP. The solution proposed by Bidder should comply with the design considerations requirements as mentioned therein and should not be limited to BoQ of the tender.

### 3.4 Development Phase:

Bidder shall carefully consider the scope of work and provide a solution that best meets the project's requirements. Considering the scope set in this RFP, Bidder shall carefully consider the solutions it proposes and explicitly mention the same in the technical proposal with the ultimate goal to achieve equitable distribution of the water being supplied to every consumer on the line assigned.

**3.4.1** Baseline of Specific Energy Consumption (SEC) is required to be done for each feasible pump.

$$\text{Baseline} = \frac{\text{Energy consumption}}{\text{Quantity of water pumped}}$$

### 3.5 Assessment, Site Survey & finalization of detailed project plan:

After signing of contract, the Agency/Bidder needs to deploy local team proposed for the project and ensure that a Project Inception Report is submitted to GMDA which should cover following aspects:

1. Names of the Project Team members, their roles & responsibilities and deliverables.
2. Approach and methodology to be adopted to implement the Project (which should be in line with what has been proposed during Tender stage, but may have value additions / learning in the interest of the project)
3. Responsibility assignment matrix for all stakeholders
4. Detailed project plan specifying dependencies between various project activities / sub- activities and their timelines

Agency/Bidder shall also identify the customizations / workaround that would be required for successful implementation and operation of the project. The report should take into consideration following guiding principles:

1) State-of-the-art: Use of the latest & best available standards to avoid locking in obsolescent technologies.
2) Saleable: Flexible; standards recognize local conditions with a wide range of devices and communication channel capabilities.
3) Scalability - Important components of the system must support scalability to provide continuous growth to meet the growing demand of the GMDA area. The system should scalability so that depending on changing requirements from time to time, the system may be scaled upwards. There must not be any system-imposed restrictions on the upward scalability in number of field devices. Main technological components requiring scalability are Field Equipment's, storage, computing performance (IT Infrastructure), and software / application performance
4) Provide analytic tools build into the system that shall support automatic detection of anomalies and their quick mitigation.
5) Manageability - Ease of configuration, and failure detection are vital to the goals of scalability, availability, and security and must be able to match the scalability of the system.

However, if the work is sub-contracted / outsourced, the sole responsibility of the work shall lie with Agency/Bidder who shall be held responsible for any delay/error/non-compliance etc. of its sub-contracted vendor. The details of the sub-contracting agreements (if any) between both the parties would be required to be submitted to GMDA.

**3.6 Planning, Preparation & Commencement of Works:**

Planning & Preparation shall include the data collection elements and the preparation of sketch plan for the distribution centers and other locations for the installations of Field Equipment's.

Prior to starting the site clearance, Agency / Bidder shall carry out survey of field locations as specified in RFP. The GMDA shall be fully informed of the results of the survey and the amount and extent of site clearance shall then be agreed with the GMDA before executing the plan.

**3.7 Integration Phase:**

The Command and control Centre should be integrated with feeds of all Equipments / component through deployed under this Project. Agency / Bidder shall provide the testing strategy including testing of various components of the software developed/customized and the solution as a whole. The testing should be comprehensive and should be done at each stage of development and implementation.

| SN | Solution to be integrated | Integration requirements |
|---|---|---|
| **1** | CIWMS | Should allow user to visualize the feeds accessing to GMDA control room(s).<br>All the information received at the ICCC will also go into the Analytical layer which will help city in better planning and running of operations. ICCC should also be able to trigger the commands / alerts (if required) to the respective Official.<br>All the required licenses for the ICCC integration in existing system shall be taken care in bidder cost which includes development, deployment, integration etc.<br>Certificate from ICCC OEM stating that necessary cost estimate is included for the integration, development, licensing etc. in the bidder scope. |

### 3.8 Go-Live Preparedness and Go-Live:

a. Agency / Bidder shall prepare and agree with GMDA, the detailed plan for Go-Live (in-line with GMDA's implementation plan as mentioned in RFP).

b. Agency / Bidder shall define and agree with GMDA, the criteria for Go-Live.

c. Agency / Bidder shall submit signed-off UAT report (issue closure report) ensuring all issues raised
d. during UAT are being resolved prior to Go-Live.
e. Agency / Bidder shall ensure that Go –Live criteria is met and Agency / Bidder needs to take approval from GMDA team on the same.
f. Go-live of the application shall be done as per the finalized and agreed upon Go-Live plan.

### 3.9 Scope of Work Post Implementation Phase:

The post-implementation phase shall be segregated into three phases consist of a stabilization period, warranty period and AMC period. The Agency / Bidder shall submit a detailed acceptance testing document at the stage of planning, GMDA and Agency / Bidder shall mutually agree upon the same.

#### 3.9.1 Testing and Acceptance Criteria:

a. Agency / Bidder shall demonstrate the following mentioned acceptance criteria prior to acceptance of the solution as well as during project operations phase, in respect of scalability and performance etc. SI may propose further detailed Acceptance criteria which the GMDA will review. Once GMDA provides its approval, the Acceptance criteria can be finalized. In case required, parameters might be revised by GMDA in mutual agreement with bidder and the revised parameters shall be considered for acceptance criteria. A comprehensive system should be set up that would have the capability to log & track the testing results, upload & maintain the test cases and log & track issues/bugs identified.

b. The following table depicts the details for the various kinds of testing envisaged for the project:

| Type of Testing | Responsibility | Scope of Work |
|---|---|---|
| Field Equipment Testing | ✓ Agency / Bidder | ▪ Perform Field Equipment's testing<br>▪ Performance and load testing for Field Equipment's.<br>▪ Testing tools to be provided by Agency / Bidder. GMDA doesn't intend to own these tools. |
| System | ✓ Agency / Bidder | ▪ Perform System testing |

| Type of Testing | Responsibility | Scope of Work |
|---|---|---|
| | | ▪ Prepare test plan and test cases and share with GMDA.<br>▪ Should be performed through manual as well as automated methods<br>▪ Automation testing tools to be provided by Agency / Bidder. GMDA doesn't intend to own these tools |
| Integration Testing | ✓ Agency / Bidder | ▪ Perform Integration testing<br>▪ Prepare and share with GMDA the Integration test plans and test cases<br>▪ Integration testing to be performed through manual as well as automated methods<br>▪ Automation testing tools to be provided by Agency / Bidder. |
| Performance and Load Testing | ✓ Agency / Bidder GMDA / Third Party Auditor (to monitor the performance testing) | ▪ Performance and load testing.<br>▪ Various performance parameters such as transaction response time, throughput should be taken into account.<br>▪ Load and stress testing of the Project to be performed.<br>▪ Test cases and test results to be shared with GMDA<br>▪ Performance testing to be carried out in the exact same architecture that would be set up for production.<br>▪ Use performance and load testing tool for testing. GMDA doesn't intend to own these tools.<br>▪ GMDA if required, could involve third party auditors to monitor/validate the performance testing. Cost for such audits to be paid by GMDA |
| Security Testing (including Penetration and Vulnerability testing) | ✓ Agency / Bidder GMDA / Third Party Auditor (to monitor the security testing) | ▪ Solution should demonstrate the compliance with security requirements as mentioned in the RFP including but not limited to security controls in the application, at the network layer, network, data center (s), security monitoring system deployed by Agency / Bidder. Solution shall pass vulnerability and penetration testing for rollout of each phase. The solution should pass web application security testing for the portal, mobile app and other systems and security configuration review of the infrastructure.<br>▪ Agency / Bidder should carry out security and vulnerability testing on the developed solution. |

| Type of Testing | Responsibility | Scope of Work |
|---|---|---|
| | | ▪ Security testing to be carried out in the exact same environment/architecture that would be set up for production.<br>▪ Security test report and test cases should be shared with GMDA<br>▪ Testing tools if required, to be provided by Agency / Bidder.<br>▪ During O&M phase, penetration testing to be conducted on yearly basis and vulnerability assessment to be conducted on half-yearly basis.<br>▪ GMDA will also involve third party auditors to perform the audit/review/monitor the security testing carried out by Agency / Bidder. Cost for such auditors to be paid by GMDA |
| User Acceptance Testing of Project | ✓ GMDA or GMDA appointed third party auditor | ▪ GMDA / GMDA appointed third party auditor to perform User Acceptance Testing<br>▪ Agency / Bidder to prepare User Acceptance Testing test cases<br>▪ UAT to be carried out in the exact same environment/architecture that would be set up for production<br>▪ Agency / Bidder should fix bugs and issues raised during UAT and get approval on the fixes from GMDA /third party auditor before production deployment<br>▪ Changes in the application as an outcome of UAT shall not be considered as Change Request. Agency / Bidder has to rectify the observations. |

***Note:***

a. Tenderer needs to provide the details of the testing strategy and approach including details of intended tools/environment to be used by Agency/Bidder for testing in its technical proposal. GMDA does not intend to own the tools.

b. Agency / Bidder shall work in a manner to satisfy all the testing requirements and adhere to the testing strategy outlined. Agency / Bidder must ensure deployment of necessary resources and tools during the testing phases. Agency / Bidder shall perform the testing of the solution based on the approved test plan, document the results and shall fix the bugs found during the testing. It is the responsibility of Agency / Bidder to ensure that the end product delivered meets all the requirements specified in the RFP and take remedial action based on outcome of the tests.

c. Agency / Bidder shall arrange for environments and tools for testing and for training as envisaged. Post Go-Live; the production environment should not be used for testing and training purpose. If any production data is used for testing, it should be masked and it should be protected. Detailed process in this regard including security requirement should be provided in its technical proposal. The process will be finalized with the selected bidder.

d. All the Third-Party Auditors (TPA) as mentioned above will be appointed and paid by

GMDA directly. All tools/environment required for testing shall be provided by Agency / Bidder.

e. The cost of rectification of non-compliances shall be borne by Agency / Bidder.

### 3.10 Maintenance and Supervision during Stabilization Period:

After the proposed Project is commissioned and placed in service, GMDA shall issue a Provisional Acceptance Certificate (PAC) along with Go-Live.

GMDA authorized representatives shall issue a Provisional Acceptance certificate, (PAC) phase-wise (to be finalized later on case-to-case basis) for successful commissioning and testing covering all Filed Equipment's/Instruments and other IT infra-structure and monitoring facilities so that trial run/field trials can be started. PAC may be issued phase wise, as and when some sectors or areas are fully implemented and successfully commissioned and tested (to be finalized on later case-to-case basis).

PAC will not be held back for want of minor deficiencies not affecting the functioning of the overall system. Deficiencies, if any, pointed at the time of issuance of PAC, will be rectified by the Agency/Bidder within one month. The Provisional Acceptance Certificate shall be signed by both the parties.

The Bidder shall be responsible for proper maintenance and supervision of the system(s) as defined under "Special Conditions for Comprehensive Maintenance Contract". The stabilization period shall comprise of first 12 months (after issue of PAC) extendable by GMDA, post which FAC will be issued.

**Roles & Responsibilities: -**

**GMDA:**

GMDA agrees to observe, comply and perform the following:

- Minimum space required for installation of items for CIWMS will be provided by GMDA. However, all Civil/Electrical works required will be the responsibility of the Bidder.
- At the end of the Agreement period, all rights given to the Bidder shall be terminated automatically.
- GMDA shall provide single window clearance, where GMDA has full control jurisdiction, to the bidder for the purpose of this RFP document.
- Cost related to Electric connection and its usage shall be payable by GMDA.
- Cost related to SIMs for data connectivity and its usage shall be payable by GMDA.

.

**Bidder:**

- The Bidder shall construct/install CIWMS System only on the earmarked spaces provided by GMDA. Any violation shall result in immediate cancellation of the contract without any prior notice.
- The Bidder shall handover to GMDA the commissioned Equipment and all other items post issue of Provisional acceptance Certificate.
- Shall prepare a maintenance plan and make available the services of qualified maintenance engineer stationed at the locations approved by GMDA.
- Bidder shall keep technicians in Field as per the details mentioned in RFP. The technicians will visit the total installation once in every quarter for checking system state of health and necessary

maintenance or earlier if the situation so warrants with the provision that quarterly reports of the failures and health of the equipment shall be prepared and submitted to GMDA.

- Bidder may also require to engage additional manpower on case to case basis for proper operation & support of the system. The Bidder shall arrange the suitable replacement in case the assigned support engineer goes on leave or is unavailable due to any other reason to ensure uninterrupted support services. Additional manpower if considered necessary shall be provided by Bidder to stabilize the network, at no additional cost to GMDA.
- The Bidder shall ensure defect free operation of the entire solution and shall replace any such items, Field equipment, software and hardware which are found defective and during the stabilization period; with no cost to GMDA.
- No additional costs shall be paid separately by GMDA for any for the warranty other that what are the supply costs quoted by the Bidder.
- Final Acceptance Certificate (FAC) shall be issued by GMDA to the Bidder after successful testing in a real time condition for at least 12 months of trouble-free operation and meeting of the defined and agreed SLAs/KPIs.
- The bidder shall arrange space for storage and security provision of Eqpt etc. till issue of PAC and handing over of Eqpt. in working condition to GMDA.

### 3.11 O&M Support during AMC Period:

Bidder shall provide maintenance support (total period of 5 Years) after issue of successful PAC and Go-Live. The long-term maintenance support shall be comprehensive and include all Field Equipment's, hardware and software of equipment etc. supplied against this contract. Separate agreement shall be signed between GMDA and the Bidder for the AMC period; GMDA shall have the discretion to choose any other AMC partner (if required).

## 4. Functional Requirement & Technical Specifications

### 4.1 Functional & Technical Requirements:

The Scope includes supply, installation, commissioning and customization (as required) of Centralized Integrated Water Management System (CIWMS) for centralized monitoring and operations platform for integration of data from multiple field equipment installation sites, which shall give it the capability to effectively manage and administer water operations across the City.

Following are the modules for Centralized Integrated Water Management System (CIWMS) indicating equipment's to be installed at each module: -

A) Centralized Monitoring & Control of Water Treatment Plants (Basai & Chandu) in ICCC of GMDA.

B) Monitoring and acquisition of data with regard to the process of treatment including key parameters like PH, turbidity, dissolved oxygen, sodium, chlorination etc. into CIWMS.

C) Monitoring and acquisition of data with regard to Water Distribution and leakage detection into CIWMS from Water Flow Meters, Level sensors in UGTs, Flow Control Devices etc. from distribution Pipe Lines. Ensure equitable distribution up to the last point under all circumstances

such as full supply / partial supply of water from source. Ensure reduction of Non Revenue Water (NRW).

**The detailed software requirements are further mentioned below which are to be provided.**

All of the above-mentioned modules should be tightly integrated into single centralized application to be installed in ICCC at GMDA, Gurugram.

**4.1.1** The scope also includes supply, installation, commissioning and Customization (as required) of various field Equipment's which include Flow Measuring Systems (Electromagnetic Flow Meters), Level Sensors, Pressure Transmitter, Flow Control Devices, Communication IOT Gateway, and other infrastructure required for successful operation of the Centralized Integrated Water Management System (CIWMS).

**4.1.2 Water Metering:**

Smart Meters are electronic devices with advanced metering infrastructure that supports measuring of water consumption. In the case of water consumption, smart meters typically will consist of an embedded controller that interfaces with a metering sensor, a wired / wireless transmitter, as well as communication extension and a battery. The meters will be connected to a network of IoT Gateways which allows for the continuous monitoring of water consumption of the city. The smart meters enables a two-way communication when required between the meters and a central system by transmitting data, which can be done through different channels (e.g. radio communication, power line, Internet etc.). As smart water meters are battery powered, the main communication channel is based on radio communication between the smart meter and IoT Gateway network upto the ICCC.

The system reports pipe flow measurement data with pressure. Field Equipment's coupled with sensor/transmitter networks for in site monitoring will be utilized to improve water resource management. Such sensors/transmitter are the core of systems, which perform the online measurement of the fundamental parameters of water quality including pH, conductivity, dissolved oxygen, turbidity etc.

Water transmission pipelines will have various Equipment's like Flow Control Devices, Flow Control valves, Pressure Transmitter, Water Level Sensors / Transmitters (IoTs) installed on the line. The reading from these Equipment and IoT's will be transferred on real time basis to local master SCADA system to which these meters and sensors are connected.

**4.1.2 Water Leakage management:**

Water leakage management is required:

i) To ensure right quantity of water daily to the consumers at the right time with minimum leakage.
ii) To reduce cost of per unit water by reducing water losses due to overflows, leakages.

**4.1.3 Water Distribution System:**

Monitoring of Water Distribution:

a) Monitoring distribution of water from the source to distribution point into distribution system with assessment of water requirement and its equitable distribution.
b) Monitoring UGT's if fully filled to their capacity.
c) Monitoring of inflow, outflow & water level at water treatment plants and UGT's using Flow meters and Level sensors.
d) Monitoring of schedule adherence and duration adherence of water distribution.
e) Timely trigger to plant personnel in case of deviations/abnormalities.
f) Measuring flow variations in main & connecting pipelines.

g) Managing demand variations with the help of historical filling and distribution patterns.
h) Real time alarms and SMS notifications in case of exceptions.

**4.1.4 Pressure Leakage:**

Pressure leakage in the distribution line will result in inefficient water distribution system. Proper water line pressure ensures supply for filling of UGT's and briefs on pressure leakage in various sections. The pressure and flow meters would be installed at strategic points to help in detection of pressure leakages.

Untimely opening of valves and leakage through inlet after closing of valve might be some of the other reasons of pressure leakage which department would like to monitor from central site. Real time monitoring of overflow actuate the alarm such that timely action is being taken by personnel

Based on the approved Survey report, Agency/Bidder will undertake the Requirement specifications in line with the changed, improved or specific requirements of project including:

a) The Installation methodology and approach must be based on the global best practices in-order to meet the defined Service Levels during the Installation.
b) Best efforts have been made to define major functionalities for each Field equipment's of system. However, Agency/Bidder should not limit its offerings to the functionalities proposed in this RFP and is suggested to propose any functionality over and above what has already been given in this tender.
c) Agency/Bidder shall design the field level equipment architecture to ensure maximum optimization of Field Equipment's.
d) Finally approved/accepted specifications for each field equipment's of systems shall be accompanied with "Equipment Configuration" document and the same should be referenced for installation of equipment's at locations that are identified within the scope of this project.
e) Agency/Bidder shall be required to submit a detailed installation report post installation of all the equipment at approved locations. The report shall be utilized during the acceptance testing period of the project to verify the actual quantity of the equipment supplied and commissioned under the project.
f) Agency/Bidder shall be responsible for obtaining all approvals necessary to install the field equipment's as per the approved design. GMDA would also extend all the necessary support.
g) Agency/Bidder shall connect the field instruments power requirement at multiple places.
h) If instruments are deployed in pit, it should be properly covered to avoid filling up water.

**4.2 IT Solutions / Infrastructure for CIWMS:**

Agency / Bidder will be required to install and commission the required Smart Water Management solution as per requirement given below:
GMDA envisages establishment of Centralized Integrated Water Management System at Gurugram. Water Management system would enable consolidation of data (at regular frequency – near real time) originating from all Field equipment's sites across the distribution system.
Agency / Bidder shall be responsible for Development / Customization, Testing, Deployment and Maintenance of Centralized Integrated Water Management System Software (CIWMS) and supply of necessary enterprise level, unlimited user's perpetual licenses of component required for integration purpose.

**4.3 Proposed System Schematic:**

The proposed system schematic is as shown in the figure and described as follows:

- CIWMS Application would be deployed at the Integrated Command and Control Center (ICCC) of GMDA and would be accessed through VPN by other components i.e. CIWMS Gateways, Application and standard internet browser with right access.

- IoT Gateway / Edge Remote Terminal Unit are smart device which would be connected to other field device through MODBUS (RS-485 network). Flow Meter or other device must be connected via IoT Gateway. This would allow use of Gateway for connectivity with multiple devices and should support secure software defined WAN to support multiple communication options with GSM and MPLS based connectivity in field.

➢ IoT Gateway / Edge Remote Terminal Unit should adhere the cyber security compliance for data encryption and can do data inspection, should able to do the threat detection and inspecting the state of traffic passing through the device which prevents the malicious traffic passing the system and gaining the access, must able to support SSL and IPSEC, dynamic VPNs. It must be able to define the access control for instruments traffic. In case of hiding the traffic, it must support network address translation.

➢ Different modules of CIWMS application would be accessible from remote PC using the standard browsers for monitoring, configuring and reporting features.

➢ CIWMS Mobile Application would be running on Android and iOS phone connecting to CIWMS application in the Command Center.

CIWMS cluster Deployed at Remote PC running browser based CIWMS Application

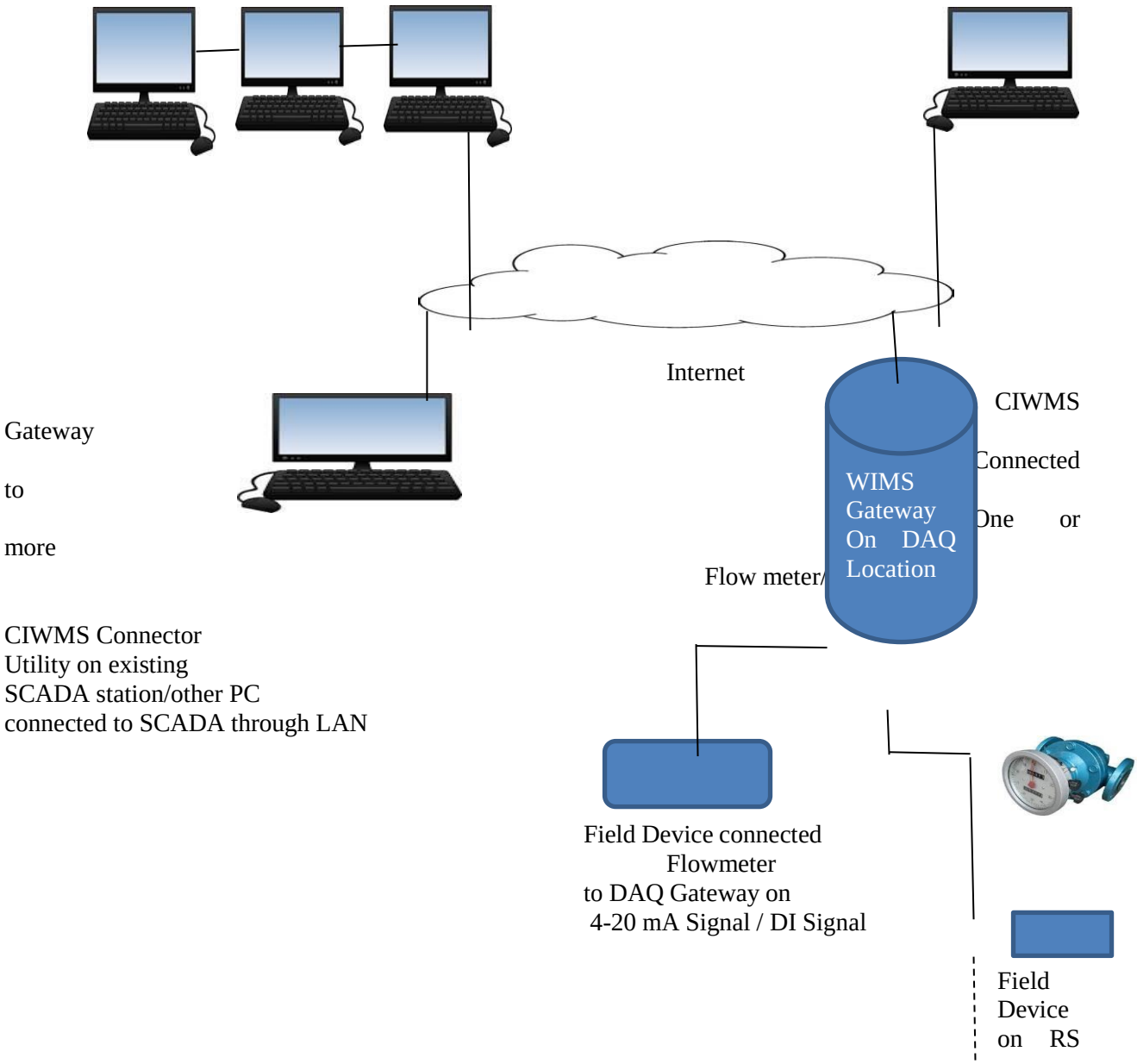

485
N/w
RS 485 N/w

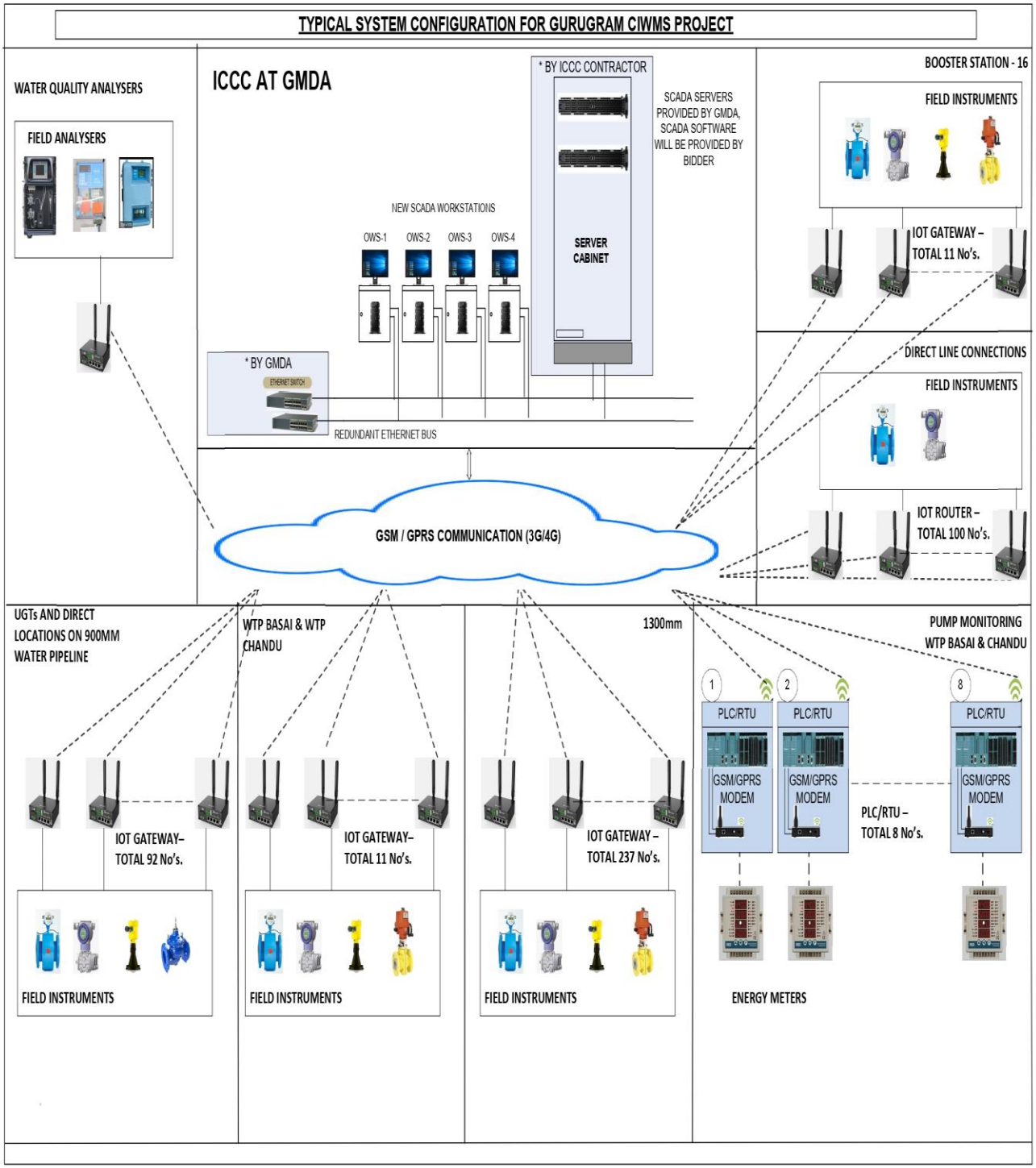


***Note*: Quantity mentioned above are only indicative. The actual quantity will vary as per site survey and requirement.**

### 4.4 Proposed Computerized Solution for CIWMS and Analytics:

Following are the detailed Technical, Functional and System Requirement for CIWMS:

a) Supply of the Integrated Water Information Management System application software with perpetual licenses and up-gradation support.

b) The CIWMS provides a single platform to view and control the entire water supply network from the command center.

c) The structured implementation of CIWMS can implement the integration of all field instruments, data collection at single server, integration of GIS mapping for underground utility piping, transfer of all data to the Website of GMDA for providing the visibility to all users.

d) To maintain and monitor the flow and pressure in the entire network so that there is equitable distribution of water across the city.

e) Situational awareness by providing geospatial views of water assets, source, capacity and trend analysis with reference to consumption, capacity etc. based on the available measurements.

f) The amount of water which is being wasted in form of NRW (Non-Revenue Water) shall be accounted.

g) Provide a Platform to ensure equitable distribution of water to residents of the City.

h) Advanced analytics and reporting capabilities that provide real-time feedback on the status of the water supply. System should enable engineers to make timely modifications to the water distribution patterns.

i) Capability to budget the water for today and tomorrow based on historical pumped data

j) Deploy a scalable, highly available, flexible platform that is based on industry standards and is designed to provide enhanced situational awareness of operations and access to a range of advanced applications.

k) Create the informed balance of the supply and demand

l) Information dissemination to desired individual, group and team automatically on important events and triggers.

m) Standard Browser based Login and view of sites action for decision makers on the move.

n) Shall provide Integrated view of the pumps and their capacity and performance, Water Treatment Plant and their capacity and performance, GLR's and their capacity and performance, ESR's and their capacity and performance, Distribution network and their capacity VS performance. To enable to have a complete ecosystem view for informed decisions.

o) Shall allow visualization of KPI's related to water systems on Geo Map with performance, capacity, demand, trend, forecast, status etc. in near real time world

p) The system shall have a capability of periodic calculation function using pipe network data (dimension, friction factor, length) and measured data (flow and pressure). The values of calculation results registered in pipe network data would also be displayed on the GIS-MAP by color coding distributions or numerical labelling. The pipe network data of GIS shall be edited and set virtual measurement points. With them the pipe network data for calculation shall be generated.

q) Run and monitor standard operating procedures (SOPs) from the operations dashboard, which can enable rapid and proactive response to potentially disruptive events. SOPs also help capture and document vital contextual and experiential information from an aging and retiring workforce.

r) Addressing leaks and other water loss issues related to aging infrastructure requires greater visibility into what is happening throughout the water network by using existing information from a utility's hydraulic model, supervisory control and data acquisition systems and meter data Promote collaboration across departments and personnel by providing a common platform.

**4.5 General Features of Computerized CIWMS solution:**

The Centralized Integrated Water Management System (CIWMS) solution shall support the following features:

a) To provide an integrated near real-time view of water assets in the City on a geo-spatial map.
b) To provide a single version of the truth to various hierarchies within the organization and thus move the organization's energy from data mining to problem solving.
c) To convert data into actionable insight through Business Analytics.
d) To allow "management by exception" through Events and Incidents rather than continuous monitoring.
e) To allow the organization to focus on proactive management.
f) To provide capability to integrate financial KPIs to drive the organization to better fiscal balance
g) System models show how assets are connected to each other and their state. Historical asset information and trends can be shown and investigated online.
h) Systems visualizes and identify issues in the water system operations and automatically triggers standard operating procedures
i) To maintain adequate audit trails. Data to be accurate, real-time (periodic intervals) and secure
j) To provide ability to do Adhoc reporting and to build report based on multidimensional factors, like time region and type of connection.
k) The CIWMS should have the ability to take data from external open sources like external Website and applications.
l) To provide ability to have Standard Operating Procedures kicked off automatically by the system so as to ensure problem situations are addressed automatically and quickly.

The ultimate aim of the CIWMS is to give GMDA the ability to have a cross sectional view of its water distribution network. The system should enable GMDA with complete water accounting right from source (WTP) till distribution. This will give GMDA the ability to analyze losses at each stage and take remedial measures based on severity of the situation.

**4.6 Representational view of multi-layered multi-functional CIWMS software with layers to perform necessary functions.**

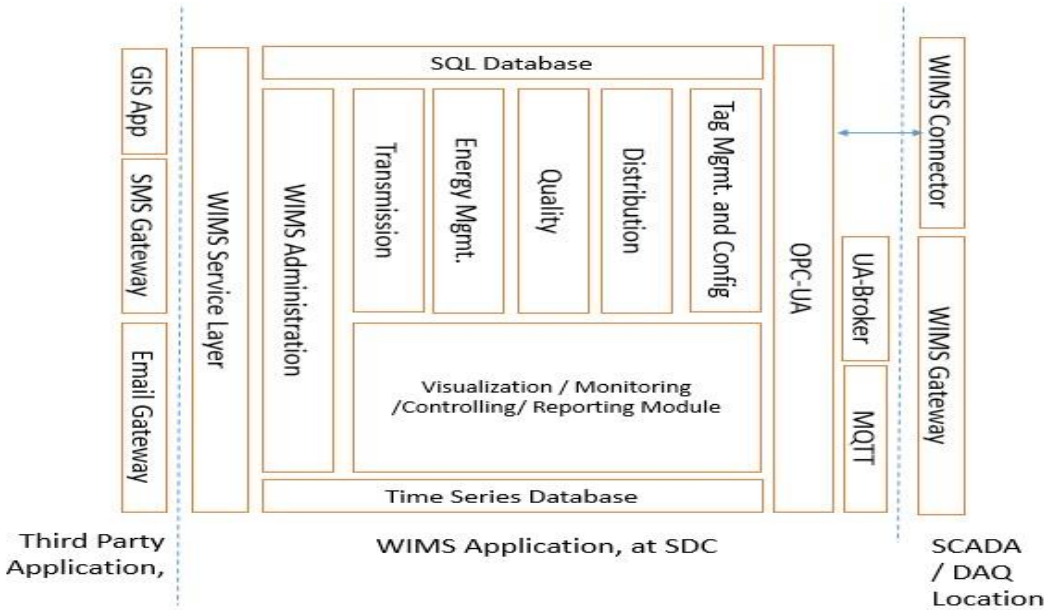

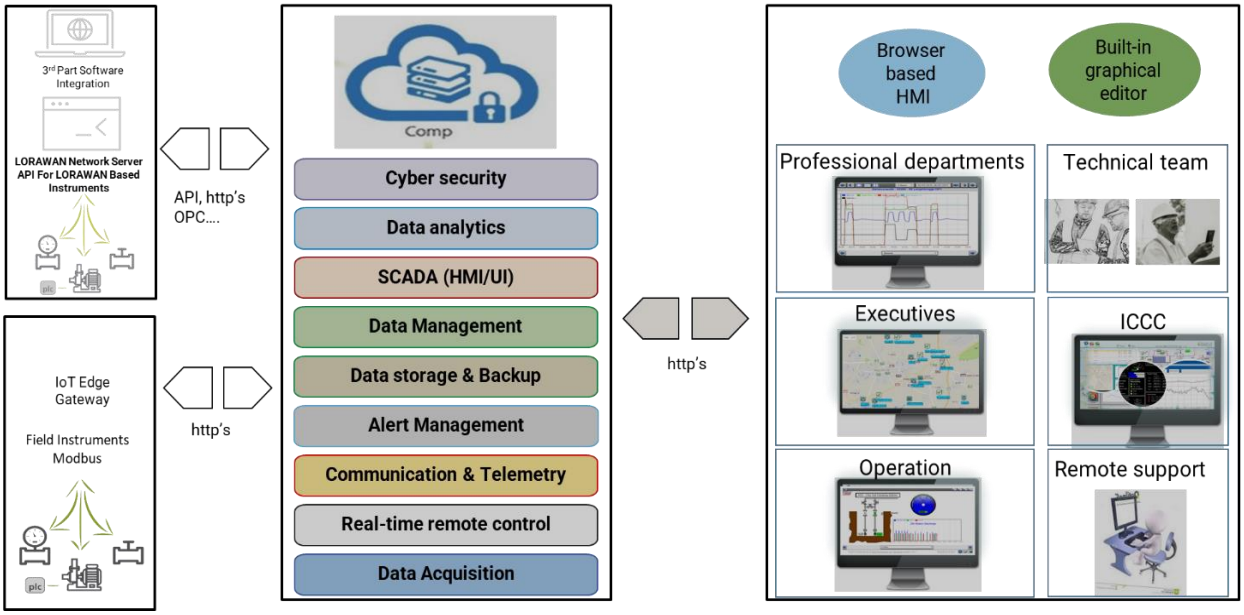


### 4.7 Integrated Command and Control Center (ICCC):

The data from all the control sites across the Gurugram City shall be collected and stored in the Command center at GMDA Office. The Command and Control Center shall act as a hub for the analysis and dissemination of information collected from various control sites.
The CIWMS workstations shall be located at ICCC & shall also be provided at WTP's & Booster stations to facilitate local monitoring & maintenance.

### 4.8 Requirement Specification for IT Solutions/ Infrastructure.

#### 4.8.1 Centralized Integrated Water Management System (CIWMS) Application Software

| SN | Parameter | Descriptive Specification | Compliance (Yes/No) |
|---|---|---|---|
| **1.** | **General** | The Centralized Integrated Water Management System Software (Including all sub-modules like Data Acquisition Module, Tag Management and Configuration Module, CIWMS Administration and Management module, CIWMS Gateway) should comply to requirement mentioned in Scope of Work along with requirement mentioned below.<br>The CIWMS software shall be implemented to improve:<br>• Hydraulic Performance<br>• Equitable distribution of water<br>• Implement Business Rules as defined in the software on various devices time to time.<br>• Safety of operation<br>• Water Quality<br>• Reduce Non Revenue Water | |

| | | | |
|---|---|---|---|
| **2.** | **Solution and Architecture** | The solution should be implemented and complied to the industry open standards based Customized/Commercial-of-the-shelf (COTS) products A support letter from OEM/Service provider (cloud & software) for 5 years will have to be provided, that should include supply of & software patches, licenses, updates, upgrades and bug fixes during warranty & AMC period. The solution should enable components to run on all major operating systems, including Microsoft Windows and Linux and should integrate with industry leading web application servers and User Interface/HMI should be able to run on any browser and operating system. Must have built-in fault tolerance, load balancing and high availability. System must be built on an open and industry standard architecture. Must provide a comprehensive API (Application Program Interface) or SDK (Software Development Kit) to allow interfacing and integration with existing systems. | |
| **3.** | **DAQ (Data Acquisition Module)** | DAQ Module would serve as a core engine for the real time & historical process data connectivity with remote SCADA and device locations.<br>• This module would work as Integration Interface based on Industry Standard Communication Protocol for Industrial Automation for field devices.<br>• This module would use HTTPS, JSON for data acquisition to ensure secure and web-based connectivity with SCADA on various remote locations.<br>• This module would also expose HTTPS, JSON Server Interface for all mapped tags.<br>• This would support HTTPS, JSON for data acquisition with other CIWMS Gateway device.<br>• In case of LoRWAN based acquisition it must be accepting the data from LoRaWAN network server over a secure medium. | |

| | | | |
|---|---|---|---|
| **4.** | **Tag Management & Configuration Module** | The Tag Management & Configuration module would serve as a configuration and management application tool for all Tags, core engine for the real time and historical process data connectivity with remote Control Centre and device locations.<br>• Tag Configuration on the CIWMS and Connector utility should be common and the tag naming convention should be standardized in such a manner that it remains common across the multiple hierarchies of Location/Station/Devices.<br>• The software module should provide a feature in which nodes/locations/stations in a Hierarchy can be assigned one or other type of categories, so when generating new nodes/locations/stations using the same categories, it can be populated automatically for a similar kind of node/location/station.<br>• There should be facility for creating new tags /parameters as formulas and functions of time and other parameters and then logging it.<br>• The module should provide interface to define and configure tags in hierarchical manner.<br>• The module should provide web based visualization, monitoring, controlling and reporting feature and should have enterprise module to manage the sensor data.<br>• The access to all tags should be Role based access to which can be controlled with hierarchical, category, node based. It should have the capability for selection, definition, exploration, modeling and deployment.<br>• This module should allow export and import feature for complete Tags database or selective node in Hierarchy. | |
| **5.** | **CIWMS Administration & Management Module** | This would be serving as administration and management module for the entire CIWMS application.<br>• This should support backup, scheduler, and restore feature.<br>• This should allow export/import of Tag Configuration Data and Configuration data for all, Visualization/Reporting/Monitoring component as well as connector utility and device configuration data for all sites. This should be in either of CSV/Excel/XML format.<br>• The system should support tag database storage of minimum 10,000 tags. It is expected that real time, time series data should be stored for last 3 years and MIS reporting parameters should be supported for 10 years. However, there should be facility for archiving the tag values in some storage media in case it is to be retrieved from storage for later usage.<br>• There should not be any limit on the number of Tags to be configured in the system and the number of users to be allowed | |

| | | | |
|---|---|---|---|
| | | in the system. | |
| **6.** | **Visualization, Monitoring, & Controlling, Reporting Module** | This module be used for real time & historical data visualization, thematic maps, time series graphs, tables, longitudinal profiles, monitoring, controlling and reporting of process data aggregated from remote DAQ locations.<br>• Tenderer has to provide web-based Visualization, Monitoring, Controlling and Reporting module.<br>• The software module should support mimic, trends, gauges, graphs for real time visualization / monitoring and controlling feature and should also support reporting feature with dashboard, trends and graphs. It should be allow adding all new visualization components dynamically for future addition and editing.<br>• The software module should raise exception-based alerts / events with role-based acknowledgement feature.<br>• The visualization facility on the CIWMS server should use the common tag convention & attributes to automatically identify, select and filter the tags as per the tag convention (for visualization, reporting and comparison purpose).<br>• It should generate MIMIC/Trends / Screens / Historical reports using Node type & Tag type attribute rather than selecting individual Tag in the hierarchy.<br>• The access to all screens should be Role based which can be controlled with hierarchical, category and node.<br>• The software module should also categorize and group the nodes as per the various type of system such as Transmission / Distribution / Pumping Station based node in hierarchical manner to make the visualization and reporting feature perfectly scalable and flexible for automatically populating newly added locations based on their naming convention and node type category.<br>• It should support Reporting Interval of 5, 15, 30 or 60-minute base intervals. It should support hourly (1, 2, 4, 8 Hours), Daily, Weekly and Monthly aggregation for reporting as well as should support aggregation type such as, max, min, average, cumulative as well as to derive on-time and off-time interruption count from status parameters.<br>• It should also support non-native aggregation for reporting to derive maximum demand like parameters (example. Maximum daily / Monthly value of Hourly average value)<br>• It should also support Time Zone based aggregation & reporting and should allow non-native aggregation for time zone also (Example Peak Hours maximum demand for the month. This may be used for understanding water demand during peak hours for rescheduling the distribution timing)<br>• It should support wizard-based visualization component creation using predefined category /report format / location, so a new component can be created without knowledge of back end programming tool by supervisory level end user also. | |
| **7.** | **Water Transmission Module** | The water transmission module would be used for monitoring, controlling and analyzing the water transmission system based on data acquired from various device which includes flow meters, pressure meters, level meters etc. using DAQ module from each of Field | |

| | | | |
|---|---|---|---|
| | | equipment Locations.<br>• This should leverage facility in Visualization, Monitoring, Controlling, and Reporting module for generating various components for analysis and should be integrated with this module for avoiding any duplication of efforts.<br>• This should leverage facility of node/location/station categories along with tag categories and attributes available in Tag Management module to generate new visualization components / reports/ analytic screens.<br>• After getting final requirement during the study phase, Tenderer is to provide minimum 30 visualization/monitoring/reporting / analysis / controlling screens & reports which would be used for the purpose of analysis in Water Transmission module.<br>• All these visualization / monitoring / controlling / Reporting screens / components should be defined as category. This would allow using category-based Visualization, Monitoring & Controlling, reporting components to be replicated across all similar water transmission locations | |
| **8.** | **Water Treatment Module** | The water treatment module would be used for monitoring, controlling and analyzing the water treatment system/ Water Quality data (including key parameters like PH, turbidity, dissolved oxygen, sodium, fouling, and chlorination). This would also leverage the process data acquired using DAQ module from each of DAQ Locations.<br>• The system should also allow integrating Water Quality data which are acquired from laboratory using offline instruments/ analyzer which cannot be integrated as real time online acquisition Treatment ion using standard interoperability standard such as XML / CSV and would have additional facility for entering the same using visually developed web-based interface.<br>• This should leverage facility in Visualization, Monitoring & Controlling, and Reporting module for generating various components for analysis and should be integrated with this module for avoiding any duplication of efforts.<br>• This should leverage facility of mode/location/station categories along with tag categories and attributes available in Tag Management module to generate new visualization components/reports/analytic screens.<br>• After getting final requirement during the study phase, Tenderer is to provide approximately 30 visualization/monitoring/reporting / analysis / controlling screens & reports which would be used for the purpose of | |

| | | | |
|---|---|---|---|
| | | analysis in Water Treatment module. This would also include manual data entry screen for Quality parameter acquired using offline analyzer / instruments.<br>• All these visualization / monitoring / controlling / Reporting screens / components should be defined as category. This would allow using this category-based Visualization, Monitoring & Controlling, and reporting components to be replicated across all similar water treatment locations. | |
| **9.** | **Water Distribution Module** | The water distribution module would be used for monitoring, controlling and analyzing the distribution network based on data acquired from various device which includes Flow meters, pressure meters, level meters etc. acquired using DAQ module from each of DAQ locations.<br>• This should leverage facility in Visualization, Monitoring & Controlling, and Reporting module for generating various components for analysis and should be integrated with this module for avoiding any duplication of efforts.<br>• This should ensure equitable distribution of water in all UGTs etc connected on a Water Pipeline, Implement Business Rules as defined in the software on various devices time to time, improve Hydraulic Performance, Check leakages and reduction of Non-revenue water.<br>• This should leverage facility of mode/location/station categories along with tag categories and attributes available in Tag Management module to generate new visualization components/reports.<br>• After getting final requirement during the study phase, Tenderer is to provide approximately 50 visualization/monitoring/reporting / analysis / controlling screens & reports which would be used for the purpose of analysis of distribution system (such Leakage detection, analysis of leakages, readings of level sensors in service reservoirs).<br>• All these visualization / monitoring / controlling / Reporting screens /components should be defined as category. This would allow using this category-based Visualization, Monitoring & Controlling, reporting components to be replicated across all similar water distribution networks. | |
| **10** | **Energy Analysis & Management** | The Energy Analysis & Management module would be used for monitoring energy consumption parameters and analyzing the energy analysis to achieve optimized use of energy utilization. This system would use data acquired from energy meters'/ energy transducers using DAQ module from each of DAQ locations.<br>• This should leverage facility in Visualization, Monitoring & Controlling, and Reporting module for | |

| | | | |
|---|---|---|---|
| | | generating various components for analysis and should be integrated with this module for avoiding any duplication of efforts.<br>• This should leverage facility of node/location/station categories along with tag categories and attributes available in Tag Management module to generate new visualization components / reports/ analytic screens.<br>• After getting final requirement during the study phase, Tenderer is to provide approximately 30 visualization/monitoring/reporting / analysis & reports which would be used for thepurpose of analysis for energy efficiency. The above should defined as category. This would allow using this category-based Visualization, Monitoring & Reporting components to be replicated across all similar energy locations | |
| **11** | **GIS Integration** | The system would be integrated with OneMap Gurugram for Geo-spatial visualization capability. Monitoring of all assets on GIS maps along with their current readings. | |
| **12.** | **CIWMS Dashboard** | Tenderer would develop an integrated dashboard which would include all Motors and Pump related details etc. at Water Treatment Plants, (WTPs), Booster Stations etc., water quality parameters details etc., as well as monitoring of all other installed devices in the system and shall integrate with GMDA App "myGurugram" and "Jal Mitra". Any other requirement of GMDA shall also be integrated. This shall also be used for use by citizens & department for accessing citizen centric information for monitoring water system parameters acquired from the CIWMS system. | |
| **13.** | **CIWMS Connector Utility** | The Connector Utility API Module should mediate communication with the application from the field gateway and should be embedded as API within the Field IoT Gateway. | |
| 14. | **CIWMS Gateway Device** | The CIWMS Gateway device would have following features:<br>• MODBUS Master support for acquiring data from Networked RS-485 devices.<br>• LAN Port/Fibre Port for connecting to the network with configuration feature<br>• Any of the MQTT support for connecting to CIWMS device.<br>• External 4 Channel Analog input (4-20 mA) and 4 Channel Digital Input facility for acquiring data from field device.<br>• AC to DC Power adopter for input supply, Channel Isolation, Surge Protection, Window / browser-based Configuration Software for configuring channels / baud rate / scaling / communication property. | |
| **15.** | **Industry Standards** | The Software application should adhere to industry standards for emergency management & operations standards for | |

| | | | |
|---|---|---|---|
| | | interoperability, data representation & exchange, aggregation, virtualization and flexibility. | |
| **16.** | **Protocols Support Required for centralized application** | Should support OPC DA–Modbus RTU, Modbus (4 wire) TCP, Profinet, OPC-DA<br>Should support MODBUS (2/3 wire daisy chain connectivity), MODBUS TCP Protocols for IoT Gateway/ Edge RTU. | |
| **17.** | **Water Dashboard** | The System should provide a role-based dashboard for quick views of the critical operating alerts and Key Performance Indicators (KPIs). Manage day-to-day operations and improve long term planning. Current and historic al data views. Centralized, comprehensive, and configurable platform.<br>Provide on demand geographical visibility, analysis and reporting for current, future and historic water data. | |
| **18.** | **GIS based Visibility & Control** | Ability to monitor water supply in the complete GMDA jurisdiction. When you click on a flow meter or reservoir, you should get the information about instantaneous flow or level of water in that asset, associated trends (24 hours, 7 days, monthly) and KPIs such as average flow or level of water in that asset, variance of the daily average from long term average. The water engineer should be able to set high and low thresholds for each asset. Multiple thresholds should be allowed based on time of day. When water levels fall below or exceed the thresholds, suitable alerts should be generated. These alerts should be sent be displayed on the same dashboard and sent by SMS to appropriate engineers. Severity of alerts should be programmable based on duration of event or extremity of event | |
| **19.** | **Asset Management** | All water supply systems are made up of assets, some that are buried assets and some that are visible. These are the physical components of the system and can include: pipe, valves, tanks, pumps, wells, treatment facilities, and any other components that make up the system. The assets that make up a water or wastewater system generally lose value over time as the system ages and deteriorate. Along with this deterioration, it may be more difficult to deliver the type of service that the utility's customers want. Costs of operation and maintenance will increase as the assets age. Then, the utility may be faced with excessive costs that it can no longer afford.<br>There is an approach to managing the assets of the system that can assist the utility with making better decisions on managing these aging assets. This approach is called asset management.<br>Software shall enable assets to be displayed on maps with their corresponding GIS locations like flow meters, level sensors etc. Asset status shall be reflected by different icons on the GIS map. It shall be possible to associate assets with other assets and sensors. Software should provide an easy method of searching and locating assets.<br>Software should support a tool to import external information in .CSV format into an asset database. If a specific asset in not defined, the tool shall create it based on asset type information – asset types shall be preconfigured. | |

| | | | |
|---|---|---|---|
| **20.** | **Water Visualization** | Track key measurements like Flow, Water Quality, Energy Consumption, Pump Efficiency and Pressure Optimization. View work order location, pipe prediction failure location. The system must provide a mechanism to view system maps and filters on the map. Turn on and off layers for display on a map.<br>• Visualize and filter assets by district metered areas. View ingested GIS data representing asset types that are defined in the model manager.<br>• View pipe network, meter turnouts sewer network, pumping station location, individual meter location.<br>• View key performance indicators to monitor events such as: waste water removal, dry weather overflows, wet weather maximization, efficiency of collection systems. Track key measurements like Flow, Water Quality, Energy Consumption, Pump Efficiency, Pressure. View work order location, pipe prediction failure location | |
| **21.** | **Water Efficiency Analytics** | Other than requirement mentioned in Scope of Work – Analytic Reporting heading- the system should provide a sample set of data for realizing Pump Failure Prediction. The system should provide a sample set of data for realizing Waste Water Management. The system should provide a sample set of data for realizing Water Conservation. The system should provide a sample set of data for realizing Integration with Asset Maintenance Systems. The solution should also be able to provide the following capabilities in near future like Forecasting, NRW reduction, Monitoring AMI, Work Order Integration, Grievance Integration, etc. | |
| **22.** | **Functional Requirements** | The Software should integrate data from disparate data capture systems by using integration protocols recognized by the industry. It should provide on-demand geographical visibility, analysis, and reporting, for current, future, and historic data. A unified view across Departments and offices.<br>• Ability to monitor and manage services and respond to events<br>• Incident reporting and tracking<br>• Situation awareness and reporting<br>• Real-time collaboration, Resource and critical asset management<br>• Ability to integrate with open standard connection points to existing and future systems<br>• An easy-to-use interface that is designed for multiple types of users, from daily operators to senior managers<br>The Software should be able to processes incident data and provides <u>incident management services</u> throughout the state and other subsystems. It should collect and store current flow data collected by sensors in the field for use in incident management. It should be able to analyze, correlate, and summarize incident | |

| | | | |
|---|---|---|---|
| | | related data. It should support graphical user interface for managing the classification of events such as storing, managing, and categorizing event data, analyzing, correlating, and summarizing events, reviewing and managing event data. Map interface should display a consolidated view of transportation which includes incident status, devices, events and weather conditions, etc. The Software should provide a graphical user interface for operations view to facilitate incident management. The interface should also include role-based administrative feature and provide the capability to configure the system seamlessly. It should provide Incident Prediction capability to enhance operations that should use historical data and real- time input to predict incidents over pre-set durations for future. The operators/supervisors should be able to control devices from the map based interface showing the incident information or visualization<br>It should provide graphical user interface for analyzing historical performance levels in the emergency control network. It should provide a browser-based graphical user interface for planner's view to facilitate future planning. The visualization component should provide a "List" based interface for devices. Each device type should be a separate tab such as camera, etc.<br>The Operator shall be able to perform the same actions on a Device from anywhere that they can select devices over a web based tool. The interface should include role-based administrative features to enable right level of security for multiple users of the system. It should provide prediction reports to analyze and display the reports for prediction based on speed and volume.<br><br>The application will mediate all communication. No direct access will allow from user to field gateway or the opposite.<br>The application will manage defined security and user's permissions set by the system administrator.<br>Only the application will update with On-Line data.<br>The application will include bi and multidirectional communication among field gateways and Network Servers for data sharing for process purpose.<br>Manage Alarms notifications; show alarm state in user interface and send alarms via e-mails and SMS to predefined users. The application will have the possibility to send alarm notifications also in instance messaging applications such as Telegram, WhatsApp or Messenger. In This case User will be able to react and acknowledge alarms from remote.<br>The application will be able to connect minimum 1,000 field gateways in different physical locations.<br>The application needs to allow at least 100 field data points for each gateway and at least 1,00,000 field data points in total during project expansion. | |

| | | | |
|---|---|---|---|
| | | Each data point will be able to be logged to historian on the for the period of at least 12 months. The user will have the possibility to download historical data to his local computers for longer period.<br>The application will enable to define, for each data point, the bit/register in the PLC/Controller/sensor on the remote site, the schedule for updating the values, a filter for the reading and update and other parameters that will enable to create an efficient DB.<br>The application will allow to define a virtual data point and to formulate several other data points.<br>The application will enable to define alarms and events, and for each alarm in separate to define users (several) that will get notification. Notifications should be sent as e-mail and in addition at least in two other Medias such as SMS, instant message, voice call etc.<br>Each alarm will be able to be defined with snooze and with escalation mechanisms. For some alarms the user will have the possibility not to use the escalation and to send the message to all listed users at the same time.<br>The application will enable to configure on-demand site or other group reports as PDF document with the logo of the user on it and the full details of the report (such as the station name and details, schedule etc.). The reports will have summarization lines such as average, max, min, diff etc.<br>The application will require sign in with username and password. It will be possible to the user/project administrator to decide that 2FA (2 factor authentication) is required to log in. among its internal server components.<br>For all logged data point the application will allow to present in a report and in trend its statistical values (high, low, average etc.).<br>The application will allow the administrator to define different authorization rules to different users. There will be no limit to no. of different authorizations rules for each user.<br>The rules will be able to deep down to the single bit or register.<br>The application will handle all HMI/UI (USER INTERFACE) screen design on the browser and no other license or software will be required for graphical screen design.<br>The application will have the possibility to analyze, without any additional tool, historical data and turn the results of the calculation to a new real time value that is possible to be used in the UI identically to all other real time values.<br>All real time data will be presented along with the time stamp it was originally generated (in seconds) and all stored data in database will have same time stamp as the real time values.<br>The application will expose an HTTP-based API for accessing and controlling real-time and historical data.<br>The application will only accept SSL encrypted connections from | |

| | | | |
|---|---|---|---|
| | | field gateways and users.<br>Built for Cyber – built in cyber, all the cyber security measurements are built in the COMP and do not depend in any external security adds on.<br>Smart notification system:<br>o Mail<br>o SMS<br>o Voice<br>o Telegram – most secured massages applications<br>o Notifications with live values<br><br>100% Modular: Unlimited, data, unlimited, users, unlimited values | |
| **23.** | **Key Performance Indicator** | Software application should facilitate measurement or criteria to assay the condition or performance of departmental processes & policies.<br>User Interface Features – Click to Action, Charting, Hover, KPIs, Nestled KPIs, Event triggered KPIs, Event Filtering, Support for integrating legacy systems, Drill down capability, Event Capture and User Specific Setup | |
| **24.** | **Standard Operating Procedures** | Alerts of specific category should initiate a SOP. The SOP should allow several possible responses based on ground reality and data. Appropriate approvals and status updates are needed to close SOP initiated from alerts. Different alerts should initiate different SOPs. For example, severe alerts from FM readings breaching a threshold initiate a specific type of SOP, whereas an alert that stems from a reported leak initiates a different SOP. System shall generate automated notifications through defined delivery channels as part of a Standard Operating Procedure. E.g.: email, SMS etc. System shall enable assignment of severity, urgency to alerts / incidents programmatically. System shall provide the user the ability to change severity and urgency of alerts / incidents. Software should provide for authoring and invoking standard operating procedures through graphical, easy to use tooling. Standard Operating Procedures should be established, approved sets of actions considered to be the best practices for responding to a situation or carrying out an operation. The users should be able to edit the SOP, including adding, editing, or deleting the activities. The users should be able to also add comments to or stop the SOP (prior to completion). There should be provision for automatically logging the actions, changes, and commentary for the SOP and its activities, so that an electronic record is available for after action review. Software should provide for authoring and invoking un-limited number of configurable and customizable standard operating procedures through graphical, easy to use. | |
| **25.** | **Performance & Optimization** | The system should take advantage of sensor-based data which is collected in a data warehouse and optionally displayed on a | |

| | | | |
|---|---|---|---|
| | | dashboard. Monitor performance and optimization of SCADA systems to track real time data on water management and to identify cost savings opportunities. Use advanced statistical analysis along with best practices to enable the identification of areas of improvement and potential for optimization of water management. Gain insight and ability to analyze historical patterns of water conditions in critical link areas.<br>The system must include analytics capabilities: Performing calculations and automated actions in the system, while monitoring and operating various points in the system Manage real-time balances in a network with multiple inputs and outputs<br>Identify in real time and historian imbalance between supply and actual consumption<br>Manipulate different data received from different devices in the same location or different locations. Calculating average, totalize and integrate on specified values<br>IT/OT convergence – integrates information technology (IT) with operational technology (OT) in real-time for efficiency optimization.<br>Built in mathematical functions generator for real-time data processing.<br>Business Intelligence functions that use aggregated data and present, as part of the real-time system, the calculated results to be used in dashboards and all parts of the system like Reservoir Water Levels and planning related to consumptions etc. | |
| **26.** | **Security** | Integrate with historians not directly with control center systems.<br>Role-based access control mechanism for user authentication and rights<br>User password strength is scored. Complex password is required for a high score approval.<br><br>2FA (Two Factor Authentication) will be required for data update by users.<br><br>Communication to devices in the field needs to be performed using SHA-256 encryption<br><br>Each user on the system needs to have assigned a username and password. Passwords need to be stored salted by generating a random UUID for each user and encrypted using MD5 hashing.<br><br>Log-In on browsers must always be performed using HTTPS, so passwords are never sent in plaintext on the wire<br><br>All sessions are secured (in addition to SSL) by a 128 bits hash code (S-Key) that is manipulated with the actual IP and routinely changed. The manipulated and encrypted S-Key is attached to every HTTP | |

| | | | |
|---|---|---|---|
| | | transmission.<br><br>Dynamic IP must be used both for hardware units in the field and for user's view.<br><br>User sessions needs to expire automatically after 10 minutes of inactivity. The user's access token, generated on log-in, is valid for starting session for one hour. After it expires, the user will need to provide their credentials to access the system.<br><br>Project administrator needs to have option to select time interval for users to be forced to change their password. Intervals need to be selected as 90, 180, 365 days or "never".<br><br>Detailed credentials for each user with several separated rules – ability to define specific authorizations for each user.<br><br>False user log-in needs to activate a delay algorithm that block hacking. After 2 more retries the access will be blocked for 30 minutes.<br><br>Units in the fields need to connect to the server via HTTP/HTTPS or MCP (port 443).<br>Units in the field need to have unique 128-bit access token, generated randomly by software for each field gate.<br><br>Option for a "Value Change" Notification, function which allow, for sensitive remote operations, a real-time notification message to the relevant person in the utility with the details about the user that made this change and the new value (so any remote unauthorized change will be notified in real time and will be re change to the original value with no time).<br><br>Option for monitoring only – for critical sites, remote operation is blocked, and only remote monitoring is running (upgradable FOC to full service).<br><br>Privilege elevation<br><br>Automatic alert for any remote change of critical value (even if was change manually on site)<br><br>Smart Alarms handling:<br>o Possible to define escalation mode (unlimited escalation steps)<br>o Possible to configure "Nagging" for alarms (may also combine nagging + escalation)<br>o Possible to monitor status and duration of alarms as part of the Business Intelligence<br><br>MFA – Multi Factional Authorization | |

| | | | |
|---|---|---|---|
| | | HMI/UI (USER INTERFACE)/UI (User Interface) requirements:<br><br>The graphical user interface (HMI/UI (USER INTERFACE) will work on a standard web browser and no other software or application will have to be used or installed.<br><br>It will be possible, however, to interface, in addition to the browser HMI/UI (USER INTERFACE), a 3rd party HMI/UI (USER INTERFACE) by OPC DA.<br><br>Graphical screen design will be done by an editor that will be integral part of the system, will run on the browser as JS and will not require additional licensing.<br><br>The user interface will be used also to define values and other parameters for reports, alarms etc.<br><br>The user interface will be available only on SSL encrypted secure connections.<br><br>Authorized users will be able to export CSV files for every value logged to data base.<br><br>The user interface will display the Real time data and status of all sites on geographical map.<br><br>The user interface will display all real time and logged data exist in the system including real time values, status of bits and I/O, status of communication, & connection, real time alarm list, historical alarm log etc.<br><br>The user interface will allow to acknowledge alarms, to silence alarms, to unsilenced alarms and to display a detailed report of the status of all alarms by group and by type.<br><br>Identification of the user that made acknowledge to alarms will be store in alarm log together with time stamp of the action.<br><br>“Read back” function - Update information on UI only after read back from site (guarantee data integrity)<br><br>SCADA Technology must be proven by at least 5 years<br>Minimum 5 years of installation experience in water and wastewater networks. The winner will have to present minimum 5 projects using this software application. | |
| **27.** | **Data Integration & Storage** | The system must integrate data from different water and data capture systems by using integration protocols recognized by the industry. Water information model core and basic platform for visualization and analysis of water and event data. | |

| | | | |
|---|---|---|---|
| **28.** | **Reporting and KPIs** | Executive dashboards with Metric Reports and Metric Workspace Displays. Performance improvements in reporting solutions.<br>Capability to set a limit on the number of records presented from an Ad-hoc report so users aren't waiting for results for a long time.<br><br>Executive dashboards with Metric Reports with Slice-and- dice, out of box Drill-down / Drill-through, On-the-fly hierarchical change capabilities with non-limitation on result set with due consideration to performance with a response time of within 10 secs.<br>It should have further capabilities for data exploration using features such as correlation matrix, scenario analysis with templatized reports with provisioning to favoritism a report for easier access | |
| **29.** | **License** | Perpetual License | |
| **20.** | **Warranty/Technical support** | 5 Years comprehensive onsite OEM warranty with necessary updates, upgrades and patches. | |

**4.8.2 CIWMS Application Server Sizing for Installation & Back Up – For up to 50,000 Tags additional Infra will be provided by GMDA as the project and data points scales up.**

| **Application** | **Qty** | **P/VM** | **RAM (in GB)** | **Min Clock Speed** | **Total Virtual Cores** | **vCPU:pCPU** | **Total Physical Cores** | **Total RAM (in GB)** | **Storage (in GB) appln** | **Storage for OS** | **Total Storage (in GB)** | **IOPS required** | **GPU if Req** | **OS** | **Database** |
|---|---|---|---|---|---|---|---|---|---|---|---|---|---|---|---|
| **Application server** | 3 | VM | 16GB | 3GHz | 8 | 2:1 | 4 | 16GB | 500 GB | 30GB | 530 GB | 2000 | n/a | Ubuntu >= 21.04 | n/a |
| **Database server** | 2 | VM | 16GB | 3GHz | 8 | 2:1 | 4 | 16GB | 2TB | 100 GB | 2.1 TB | 500 | n/a | Ubuntu >= 21.04 | PostgreSQL >= 13.4 |

**5.0 Indicative list of equipment required in the field to operationalize this project are mentioned below:**

1. Flow Meters (Electro Magnetic Full-Bore Type Flow Meters).
2. Level Measuring Sensors to be Installed on UGT's
3. Flow Control Devices.
4. Pressure monitoring & control devices.
5. Sluice Valves & Valve Actuators.
6. IOT Gateway / Edge Remote Terminal Unit (RTU)

7. SMPS, UPS, Surge Protector, Enclosure to House IoT Gateway, SMPS, UPS, surge Protector.
8. Water Quality Sensors **(**Turbidity Sensor, pH sensor, Total Dissolved Solids, Residual Chlorine)
9. Pump Monitoring System
10. Workstations

**5.1 Flow Measuring Systems:**

**Electro Magnetic Full-Bore Type Flow Meters / Insertion Type flow meters**

**5.1.1 Electro Magnetic Full-Bore Type Flow Meters:**

**(a) General requirements:**

Flow meters shall consist of flow sensor, flow transmitter, digital flow indicator and integrator and any other items required to complete the flow measuring system in totality.

**(b) Scope:**

The scope shall include supply of all Flow meters with all related fittings, fixtures at sites mentioned in Annexure A & B including counter flanges as required for the flow meters, including installation. The scope shall also include supply of hardware's and software's required for the data logging/monitoring system.

The scope covers supply and installations of Electromagnetic flow measuring system including all necessary fittings, specials and other related equipment to complete the installation successfully in Cast Iron, Ductile Iron, Mild Steel and or PE pipes.

Flow-meters shall be installed on the distribution points (near UGT's) and shall be logged during flow measurements. These meters are expected to set out the remote reading facility of flow and pressure data from field to control room via IoT connectivity.

Shall be DC operated.
Power supply connectivity of devices / instruments shall be established with the IoT Gateways having provision for SMPS (in redundancy mode). Technical specifications for SMPS along with logical diagram is as per item 4.2.9.
Wherever on account of low water pressure, Electro Magnetic flow meter is not able to function the bidder shall provide flow meter with Electrical actuator operating on 230V AC
The design, construction material, manufacture, inspection, performance and testing shall comply with all applicable Standards and Codes.

Unless, specified otherwise, all Flow-meters shall be full bore Electro-magnetic flow-meters.

**(c) Technical Requirements:**

| S N | Parameter | Descriptive Specification | Compliance (Yes/No) |
|---|---|---|---|
| 1 | General Requirements | Flow measuring system shall consist of flow sensor, flow transmitter, digital flow indicator and integrator and any other items required to complete the flow measuring system in totality. Flow sensor shall be rugged in construction and shall be suitable for continuous operation. Flow | |

| | | | |
|---|---|---|---|
| | | sensor shall have water proof construction and shall be suitable for installation on underground / partially buried / above ground pipelines.<br>To avoid the effects of disturbances in the velocity profile, a straight and uninterrupted run, upstream as well as downstream from the location of the flow sensor shall be provided, as required by the flow meter manufacturer and in line with applicable standards. Contractor shall finalize the exact location of flow transducers in consultation with Engineer-in-charge.<br>The flow transmitter shall be suitable for remote mounting (at the reservoir locations) and shall accept input from the flow transducer. It shall process the input signal and provide 4 - 20 mA DC output or Modbus proportional to flow rate. Flow transmitters shall have LCD display to indicate instantaneous flow rate. The flow range shall be adjustable. The flow meters shall be equipped with 32 bit microprocessor suitable for measuring flow at velocities of water from 0 to 6 m/sec. The flow computer shall be microprocessor based and shall have self-diagnosis facilities. The flowmeter shall be able to calibrate on COML Protocol along with third party test report. | |
| 2 | Design Requir ements | The design / selection criteria to be applied for flow and pressure measuring/ transmitting instruments shall be as follows:<br>a) All instruments shall be suitable for continuous operation<br>b) All transmitting instruments shall have a 4 - 20 mA DC output or RS 485 MODBUS linear output.<br>c) All digital outputs shall be potential free<br>d) All instruments shall be designed for the ambient conditions of temperature and humidity<br>e) All wetted parts of instruments sensors shall be non-corrosive and suitable for use with potable water containing residual chlorine<br>f) All instrumentation systems for outdoor application shall be protected to IP 68 | |

| | | | |
|---|---|---|---|
| | | g) All analogue displays shall be of the digital type with no moving parts<br>h) Instrumentation shall utilize solid state electronic microprocessor technology and avoid the use where practical of any moving parts<br>i) Instruments shall resume operation automatically on application of power following a power failure.<br>j) All sensors should have a third-party certified CE listing. Self-declarations are not acceptable. | |
| 3 | Elector Magnetic Full Bore Type Flow meters | All electromagnetic flow meters shall be installed on the pipe mains. It is recommended to use available direct electrical power supply from the grid wherever possible and to use battery powered meters' transmitters if otherwise. However, the direct power supplied transmitter shall have inbuilt battery or provided with backup power battery for continuous operation during power failure.<br>The full-bore electromagnetic flow meter shall consist of flow sensor (i.e. flow tube) equal to the diameter of the pipeline and derived / confirmed from the flow-rate and shall be provided with remote mounted flow transmitter and flow indicator and integrator and any other item required for completing the flow measuring system. Flow measurement shall not be affected by physical properties of water viz., temperature, pressure etc., within given limits. The flow meter shall be suitable for by directional flow. | |
| | 3.1 General Requirements | Electro-magnetic flow-meters shall be full-bore and suitable for reporting bi-directional flow.<br>- Sensors to be buried type and fully submersible (IP 68) and Sensors should be flanged comprising sealed flow stainless steel electrodes.<br>- Sensors should be available with reduced bore option to maintain low flow accuracy.<br>- Provide sufficient length Integral armoured tamper-proof sensor cable (IP68) from sensor to transmitter (typically with 10 m cable length however longer may be required at some sites). | |

| | | | |
|---|---|---|---|
| | | - Suitable for HDPE, Steel, Cast Iron and Ductile Iron.<br>The requirements for Flow sensor shall confirm to the following standards or better.<br>a) Size - To be derived as per flow-rate and pipe size<br>b) Type - Pulse DC excitation<br>c) Flange Rating - ANSI 150 /DIN PN Std<br>d) Electrode - SS 316<br>e) Meter Tube – SS 316 / SS 304<br>f) Protection category – IP 68<br>g) Connection/Junction Box–SS316 /equivalent.<br>h) Earthing- Ground Ring in SS 304<br>i) Accuracy - ±0.5 % of FS<br>j) Marking – Flow direction with arrow, size serial No. & make.<br>The flow computer and transmitter shall be a single unit suitable for remote mounting. It shall accept inputs from flow-tube process the signals and shall provide an output proportional to the flow rate. The output shall be suitable for transmitting over a long distance.<br>- Provide tamper proof detachable transmitter enables to indicate flow & net total flow recording display and other necessary indicators. Transmitter display parameter should be: flow rate in (m3/h or m3/s); net flow (volume) in (m3).<br>- Transmitter units should be fully interchangeable and 'plug and play' and provide flow pulse outputs to external data logger.<br>- Transmitter heads should be factory sealed and potted (IP68).<br>- All external connections to the transmitter should be 'military specification' (IP68) plug and socket<br>- Transmitter shall have inbuilt battery (Lithium ion) power for minimum of 5 years' continuous period. Provision should be given in the transmitter to indicate low battery condition to the control room. | |

| | | | |
|---|---|---|---|
| | 3.2 Calibration | The electromagnetic flow sensor shall be wet calibrated at manufacturer's facility accredited by NABL as per ISO 17025 standard using water as medium & by means of Volumetric testing along with Calibration certificate as per COML protocol must be supplied along with each flow meter. The Uncertainty of the calibration system/rig should be better than +/-0.1%, same should be clearly visible in the NABL scope and to be furnished during approval of QAP.<br>The calibration information and factory settings matching the sensor shall be stored in an integral mounted memory unit. Such memory unit shall store the sensor calibration data and signal converter settings for the life time of the product. | |
| | 3.3 Digital Panel Meters | Digital panel meters (DPM) shall be microprocessor based and modular in design. They shall accept 4 - 20 mA DC signals from transmitters. The DPM's shall provide an output of 4 - 20 mA DC proportional to input signal for re- transmitting. The DPM'S shall have back-lit LCD/ LED display. Digital panel meters shall provide excitation voltage to the respective transmitters. | |

**5.1.2 Insertion Type flow meters:**

| Sr. No | Minimum Specifications | Compliance (Yes/No) |
|---|---|---|
| 1 | Ultrasonic Flow Meters | |
| 2 | Sensors shall be UL / CE listed. Flow meter shall be a dual sensor Ultrasonic type inline flow meter In accordance with GB/T778.1, ISO 4064, JJG162. | |
| 3 | The flowmeter should have a very high measurement range of 500:1 with bi-directional measurement with a pressure rating of 16 bar. | |
| 4 | The flow meter should read flow, as low as 1 l/h and display resolution of 0.001 m3/h and totalized flow resolution of 99999999 m3. | |
| 5 | It should support photo electric interface of RS485 Modbus, MBUS, RF, etc with remote meter reading for centralized management. It should also provide output IOT signals like LORA or GPRS or NB-IOT. | |
| 6 | The IP Rating should be IP68 with ultralow power consumption of 0.1mW, and 10 years battery life. | |

| | | |
|---|---|---|
| 7 | The sensor should be calibratable and rearrangeable by COML protocol on site | |
| 8 | Flowmeter should be able to store data of past 512 days and 256 months separately. | |
| 9 | Flowmeter should be able to display instantaneous flow, totalized flow and various prompts on the LCD Screen. | |
| 10 | Flow meter accuracy shall be better than +/- 0.5% of FS. | |
| 11 | The Flowmeter should not be larger than 165 x 70 x 90mm | |

**5.2 Level Measuring System:**

**Hydrostatic / Ultrasonic / Radar Type Level Sensors:**

**(a) Scope:**

The scope covers supply and installations of Level Sensors including all necessary fittings, specials and other related equipment to complete the installation successfully in Under Ground Tanks (UGT's) (details of UGT's attached in in Annexure A & B) and shall be logged during measurements.

The Hydrostatic type level sensor device shall compromise of a transducer, transmitter, a remote level indicator and all other items required complementing the control system.

The level sensor and the field mounted transmitter shall be interconnected by integral cable of sufficient length.

IoT Gateway panel at UGT's: Transmitter attached to Level sensors are expected to set out the remote reading facility of data from field to control room sites via GSM / GPRS.

The design, construction material, manufacture, inspection, performance and testing shall comply with all latest applicable Standards and Codes.

**(b) Technical Requirements:**

| SN | Parameter | Descriptive Specification | Compliance (Yes/No) |
|---|---|---|---|
| 1 | General Requirement | a. The Hydrostatic type level measuring device shall compromise of a transducer, a transmitter, a remote level indicator on SCADA and all other items required completing the control system.<br>b. The level sensor and the field mounted transmitter shall be separate and interconnected by integral cable of sufficient length.<br>c. The design and application of Hydrostatic level meters shall take into account the vessel or channel construction, the material size, shape, environment, process fluid or material, the presence of foam, granules, size etc.<br>d. To remove the effect of water turbulence in reservoirs averaging facility should be provided in the transmitter unit. The | |

| | | | |
|---|---|---|---|
| | | transmitter will provide 4-20 mA DC Output or RS 485 Modbus. The sensor shall be calibratable and rearrangeable by COML protocol on site.<br>e. All sensors shall have a third-party certified CE listing. Self-declarations are not acceptable. | |
| 2 | Type | Hydrostatic | |
| 3 | Max. Operating temp | 0 to $60^0$ C | |
| **Transmitter/Sensor/In-Built** | | | |
| | Type | 2 wire type | |
| | Power Supply | 9-30 V DC | |
| | Measuring Range | Up to depth of 6 Mts. | |
| | Accuracy | +/-0.25% | |
| | Output | 4 to 20 mA Analog, RS-485 MODBUS | |
| | Sensor probe material | | |
| | Seal MOC | SS 316 | |
| | Sensor Protection | IP 68 | |
| | Process connection | Mounting Clamp (SS316L) | |
| | Sensor cable length | 10 Meters | |
| | Terminal Box housing | IP protection should be IP68. | |
| | Accessories to be supplied by supplier | SS 316 tag plate,10 m cable | |
| | Documents | Test certificate, calibration test certificate/conformity certificate, Guarantee/Warrantee certificate | |

## 5.3 Flow Control Devices:

The scope covers supply and installations of Flow Control Device for Water including all necessary fittings and accessories etc. to complete the installation successfully at sites attached in Annexure A & B and shall be logged during measurements.

| SN | Parameter | Descriptive Specification | Compliance (Yes/No) |
|---|---|---|---|
| 1. | Design | (a) The control valves shall be designed for flow control applications for providing precise control over the flow rates / pressure range and shall be supplied with all related accessories.<br><br>(b) The control valves shall be Diaphragm type preferably with hydraulic actuators having the control facility for intermediate valve positioning by connecting external signal. The electric actuator | |

| | | | |
|---|---|---|---|
| | | shall have digital communication port RS 232 / 485 / fiber optics/ industry standard protocols.<br><br>(c) The Electric/hydraulic actuators shall be designed to provide the required torque for operations in the flow and pressure conditions of the water transfer system.<br><br>(d) The design requirements of the valves and actuators described in this contract will be applicable to the Flow control valve system.<br><br>(e) The pressure monitoring & regulating device shall be supplied and installed along with Flow control valve to balance water supply pressure.<br><br>(f) Manual arrangement shall also be provided for operations of the Flow control valve arrangement so that operations of the valve can be carried out when the power supply of the control valve has failed. The torque requirements of the manual arrangement shall be such that one person can easily operate the valve.<br><br>(g) A selector switch shall be provided on the actuator for remote / local / hand operation of the valve.<br><br>(h) The material of the valve component shall be corrosion resistant for chlorinated water. The body shall be protected from corrosion by providing epoxy coating.<br><br>(i) The body of the Flow control valve arrangement shall be designed and tested for the applicable pressure rating of the transfer system.<br><br>(j) The Flow-control valves shall be provided with corrosion protection from inside and outside by epoxy powder coating.<br><br>(k) All the components / internal working parts shall be made from corrosion resistant material. | |
| 2. | Communication | (a) Commands / Electric signals for positioning of the control valve actuators will be from IoT Gateway. The Contractor shall also comply with the compatibility requirements of the flow control valves with IoT Gateway by providing industry standard digital communication protocol. | |

| | | | |
|---|---|---|---|
| 3. | Standards | i. The flow control valves shall be designed to cause minimum head loss. The calculation method conforming ANSI / ISA-75.01.01 (IEC 60534-2-1 Mod)-2007 and relevant IS Codes, Flow equations for sizing Control valves. This approach allows valves from various manufacturers to be compared using the same approach, thus ensuring that the best valve is selected for the applications. Fisher's Control Valve Handbook, latest International standards / publications can also be referred in the above context. | |
| 4. | Protection | (a) The monitoring devices shall be installed in appropriate IP67 boxes and control valves in PCC/RCC chambers indicated in the tender document. | |

### 5.4 Static Pressure Transmitters for Water:

The scope covers supply and installations of Static Pressure Transmitter for Water including all necessary fittings and accessories etc. to complete the installation successfully at sites attached in Annexure A & B and shall be logged during measurements.

| SN | Parameter | Descriptive Specification | Compliance (Yes/No) |
|---|---|---|---|
| 1. | Certification | Sensor shall be UL / CE listed and have linear output signal. Zero and span shall be field-adjustable. | |
| 2. | Measuring Element | Sensor sensing elements shall withstand continuous operating conditions plus or minus 50% greater than calibrated span without damage. | |
| 3. | Characteristics | Water pressure sensor shall have SS316 diaphragm construction with SS316 body, proof pressure of 2X and burst pressure of 5X Minimum. The accuracy shall be ±0.25% or better. The total error band shall be ±0.5% or better, IP protection should be minimum IP67 or better.<br><br>Pressure Transmitter's drift shall not exceed 0.1% of full scale per year.<br><br>Electric Connector for the same shall be DIN or mini DIN Connector.<br><br>Internal Snubber to protect from Vibration. | |
| 4. | Calibration | The sensor should be calibratable and rearrangeable by COML protocol on site | |
| 5. | Communication Type | Hardwire or Modbus | |

### 5.5 Sluice Valves:

The scope covers supply and installations of Sluice Valves for Water including all necessary fittings and accessories etc. to complete the installation successfully at Water Treatment Plants Basai & Chandu as well as Booster stations sites.

| S N | Parameter | Minimum Specification | Compliance (Yes/No) |
|---|---|---|---|
| 1 | Codes and Standards | Sluice valve shall be as per IS or BS standards and their latest revision, compatible for buried applications.<br>The flanges and their dimensions of drilling shall be in accordance with IS | |
| 2 | Testing and Inspection | Inspection shall be carried out at manufacturer's works to test the valves, as per requirement.<br>The design, construction material, manufacture, inspection, performance and testing shall comply with all applicable Standards and Codes. | |

### 5.5.1 Valve Actuators:

The scope covers supply and installations of Sluice Valves for Water including all necessary fittings and accessories etc. to complete the installation successfully at Water Treatment Plants Basai & Chandu as well as Booster stations sites.

| S | Parameter | Descriptive Specification | Compliance (Yes/No) |
|---|---|---|---|
| 1 | Codes and Standards | Actuators for valves shall conform to the latest applicable IS, ANSI and NEMA Standards except when stated otherwise herein or in the valve specification subsection certified by Govt. Accredited laboratory. | |
| 2 | Design Requirements | The actuator shall be suitable for operation in a hot, humid, dusty and tropical atmosphere. The type of actuator offered shall have been in satisfactory operation under similar conditions. | |
| 3 | **Technical Requirements** | | |
| | 3.1 General | Each actuator shall be adequately sized to suit the application and be continuously rated to suit the modulating control required. The gearbox shall be grease filled, and capable of installation in any position. All operating spindles, gears and head stocks shall be provided with adequate points for lubrication.<br>Each actuator shall be provided with a hand wheel for emergency manual operation.<br>Each actuator shall have:<br>a) Built-in local position indicator for 0% to 100% travel. | |

| | | | |
|---|---|---|---|
| | | b) A visible local valve position indicator mounted on the operator assembly itself.<br>The internal wiring shall be of sufficient size for the power rating involved but in no case less than 1.5 $mm^2$ copper. All wiring shall be identified at both ends with ferrules. The terminal box shall be suitable for outdoor use and shall be weatherproof and dust proof. | |
| | 3.2 Torque / Limit Switches | The torque switch shall function to stop the motor on closing or opening of the valve, or upon actuation by high torque when the valve disc is restricted in its attempt to open or close. A minimum of 2 torque switches, one for closing direction and one for opening direction shall be provided.<br>The torque switch shall have a minimum accuracy of 3% of set value. The torque switch shall be provided with calibration knobs for setting desired torque and separate knobs shall be provided for the open and closed torque switches.<br>Non-adjustable limit switches shall stop the motor and give indication when the disc has attained the fully open or close position. Each limit switch shall have 1 NO and 1 NC potential free contacts. The rating of the contacts shall be 5 A at 240 VAC.<br>Each actuator shall be provided with the following limit switches:<br>a) 2 self-locking and adjustable torque limit switches, one for each direction of travel.<br>b) 4 end-of-travel limit switches, two for each direction of travel.<br>c) 2 position limit switches, one for each direction of travel, each adjustable at any position from fully open to fully closed positions of the valve.<br>The torque and limit switches shall be housed in a separate enclosure with the same protection class as that of the actuators. | |
| | 3.3 Relays | Each actuator shall be provided with relays for matching the low voltage of remote commands with the control voltage for remote operation. The contact rating shall be 5 A, 240 VAC. | |

## 5.6 IoT Gateway/Edge Remote Terminal Unit (RTU):

The scope covers supply and installations of IoT Gateway / Edge Remote Terminal Unit (RTU) including SNMP, IP67 Enclosure, Battery Backup, all necessary fittings, accessories, etc. to

complete the installation successfully at sites attached in Annexure A & B as well as WTP Basai, Chandu and Booster station sites. Details are as follows:

| SN | Item | Minimum Specifications | Compliance Yes / No |
|---|---|---|---|
| 1 | Power Mechanism | Power supply based AC to DC power adapter, support dying gasp to send alarm before powering down. | |
| 2 | Communication Ports | Min. 4x 1G Ethernet Ports, communication port 1G fibre, USB, min dual SIM support, RS-232/RS-485, inbuilt/external DI/DO peripherals. | |
| 3 | Networking | Cellular (GSM/GPRS, 4G/LTE), 5G, Wi-Fi, Ethernet, software defined Wide Area Network support, LTE QoS. | |
| 4 | Communication Protocol | Secured transmission of telemetry via MQTT / AMQP / HTTPS using TLS/DTLS/AES 128, AES 192, and AES 256, SHA-384/SHA-512 standards, SNMP, GPS- GNSS sensors. | |
| 5 | Security (Enterprise Grade) | Hardware accelerated encryption, NAT, Access control List, dynamic and static port security, container-based platform, Minimum 1GB Flash and Minimum 1GB DRAM, Zone based firewall for threat detection, stateful inspection transparently, control plan policing. software defined WAN support, multiple VPN options -IPSEC. | |
| 6 | Data Backup | Should provide an external/internal memory card for storing data for a minimum of 30 days in case of power failures / loss of connectivity and can be collected from SCADA on restoration of Cellular network. | |
| 7 | Body Type | Temp 0 to 70-degree, Industrial grade with separate protective casing IP67/68, Shall be adequately hardened for Field Installations. | |
| 8 | Certification | • CE, FCC 47<br>• CFR Part 22,24,27,<br>• CISPR25,<br>• EN/IEC61000-4-5 (Surge),<br>• EN/IEC61000-4-11 (Voltage Disturbance Immunity),<br>• EN/IEC61000-4-4 (Electro Fast Transients Burst) as per TEC Guidelines. | |
| 9 | OEM | The IoT Gateway / Edge Remote Terminal Unit software should be Common Criteria Certified/Equivalent Certificate and certificate should be submitted. | |
| 10 | SMPS, Battery and Enclosure: | IoT Gateway shall be provided with SMPS, Battery sets of suitable size for 2 Hrs Battery backup with charging arrangement and Stand alone Enclosure as mentioned below of suitable size to house all these items complete in all respect with wiring etc. Earthing and protection against surge shall be provided. Sample diagram for connectivity is enclosed. | |
| 11 | Connectivity: | All devices / instruments must be MODBUS based standard protocol supported and must be connected via IoT Gateway. | |

| | | | |
|---|---|---|---|
| | | Data acquisition done on MODBUS (RS 232 / RS 485 shall be transferred over Internet using MQTT/MODBUS -TCP. The IoT Gateway shall act both as Communication Gateway and Site controller. The Gateway shall collect data directly or provide secure VPN to PLCs used to monitor asset. The Gateways shall facilitate to control the assets at site through commands issued manually or by the system.<br>Bidder shall establish GSM connectivity with ICCC. | |
| 12 | Power supply | Bidder shall extend commercial power supply to connect IoT Gateway with main supply. | |
| 13 | Management | All IoT Gateways / Edge RTUs shall be centrally managed through a single dashboard to be provided with operator-based monitoring & control as well as network connectivity visibility. | |
| 14 | Tracking | It shall be possible to track IoT Gateway / Edge RTU in Real time by Built in GPS system on the Dashboard. | |

**Note:** To manage multi service Network & IoT Gateway (Device configuration/management/monitoring/Firmware Management etc.) management services/software must be included.

Bidder shall provide Technology updates and upgrades for the entire lifecycle of the product without any additional cost.

Stand alone Enclosure mentioned at SN 10 above shall be of Suitable Dip Galvanized MS Housing outdoor type with IP 67 protection from rain water, dust etc. Provision for theft prevention for Security and protection of Installed Equipment shall be ensured.

Bidder to provide GSM connectivity between the IoT Gateway site and ICCC/Data Centre of GMDA. Cost for the same to be included till commissioning and handing over of Equipment to GMDA.

Bidder shall extend commercial power supply to connect IoT Gateway at site with Mains Power supply. Cost for the same to be included till commissioning and handing over of Equipment to GMDA.

### 5.7 SMPS Technical Specifications:

| SN | Parameters | Minimum Specification | | Complied (Yes/No) |
|---|---|---|---|---|
| **1** | **OUTPUT** | | | |
| | DC Voltage | **12V** | **24V** | |
| | Rated Current | 2.1A | 1.1A | |
| | Current Range | 0 ~ 2.1A | 0 ~ 1.1A | |
| | Rated Power | 25.2W | 26.4W | |
| | RIPPLE & NOISE (Max.) | 120mVp-p | 120mVp-p | |
| | Voltage Adj. Range | 10.8 ~ 13.2V | 22 ~ 27.6V | |
| | Voltage Tolerance | ±1.0% | ±1.0% | |
| | Line Regulation | ±0.5% | ±0.5% | |
| | Load Regulation | ±0.5% | ±0.5% | |
| | Setup, Rise Time | 1800ms, 23ms/230VAC | 4000ms, 30ms/115VAC at full load | |
| | Hold Up Time (Typ.) | 80ms/230VAC | 14ms/115VAC at full load | |
| **2** | **INPUT** | | | |

| | | | | |
|---|---|---|---|---|
| | Voltage Range | 88 ~ 264VAC 125 ~ 373VDC (Withstand 300VAC surge for 5sec. Without damage) | | |
| | Frequency Range | 47 ~ 63Hz | | |
| | Efficiency (Typ.) | 81.5% | 86% | |
| | Ac Current (Typ.) | 0.7A/115VAC 0.4A/230VAC | | |
| | Inrush Current (Typ.) | COLD START 45A/230VAC | | |
| | Leakage Current | <2mA / 240VAC | | |
| **3** | **PROTECTION** | | | |
| | Overload | 110 ~ 180% rated output power | | |
| | | Protection type: Hiccup mode, recovers automatically after fault condition is removed | | |
| | Over Voltage | 13.8 ~ 16.2V | 27.6 ~ 32.4V | |
| | | Protection type: Shut off o/p voltage, clamping by zener diode | | |
| **4** | **ENVIRONMENT** | | | |
| | Working Temp. | -20 ~ +70℃ (Refer to "Derating Curve") | | |
| | Working Humidity | 20 ~ 90% RH non-condensing | | |
| | Storage Temp., Humidity | -40 ~ +85℃, 10 ~ 95% RH | | |
| | Temp. Coefficient | ±0.03%/℃ (0 ~ 50℃) | | |
| | Vibration | 10 ~ 500Hz, 5G 10min./1cycle, period for 60min. each along X, Y, Z axes | | |
| **5** | **SAFETY & EMC** | | | |
| | Safety Standards | UL62368-1, TUV BS EN/EN62368-1 , AS/NZS 62368.1, EAC TP TC 004, CCC GB4943.1, BSMI CNS14336-1, BIS IS13252(Part1):2010/IEC 60950-1: 2005 approved | | |
| | Withstand Voltage | I/P-O/P:3KVAC I/P-FG:2KVAC O/P-FG:0.5KVAC | | |
| | Isolation Resistance | I/P-O/P, I/P-FG, O/P-FG:100M Ohms / 500VDC / 25℃/ 70% RH | | |
| | Emc Emission | Compliance to BS EN/EN55032 (CISPR32) Class B, BS EN/EN61000-3-2,-3,GB9254 class B,GB17625.1, EAC TP TC 020, CNS13438 Class B | | |
| | Emc Immunity | Compliance to BS EN/EN61000-4-2,3,4,5,6,8,11, light industry level, EAC TP TC 020 | | |
| **6** | **OTHERS** | | | |
| | MTBF | 3992.0K hrs min. Telcordia SR-332 (Bellcore) ; 663.3K hrs min. MIL-HDBK-217F (25℃) | | |
| | Dimension | 78*51*28mm (L*W*H) | | |
| | Packing | 0.2Kg; 60pcs/13Kg/0.46CUFT | | |

## 5.8 UPS(1KVA) Technical Specifications:

| S.NO | Parameters | Minimum Specification | Complied (Yes/No) |
|---|---|---|---|
| 1 | Capacity | Minimum 1 KVA with I hour battery back up on full load. (Power Factor minimum 0.8)<br>The UPS shall have 30% spare capacity for future requirements. However, in case the need is for capacity more than 1 KVA (with one-hour battery backup) on full load, the same shall be provided by the bidder. | |

| | | | |
|---|---|---|---|
| | | The design for total capacity shall be provided by the bidder along with the offer with justification. | |
| 2 | Technology | True ONLINE (Double Conversion) PWM technology using IGBTs for switching at high frequency (> 15 KHz) | |
| 3 | Connector | SNMP connectivity | |
| 4 | Electrical Input | Single Phase, 230 V AC | |
| 5 | Electrical Input | Voltage Range 170 – 280 V on Full Load Voltage Range 110 – 280 V on less than 70% load. | |
| 6 | Electrical Input | Frequency range 45 – 55 Hz | |
| 7 | Electrical Input | Efficiency AC to AC: > 85% | |
| 8 | Electrical Output | 230 VAC | |
| 9 | Electrical Output | Frequency: 50 Hz + 0.25 Hz (free running); + 2 Hz (sync mode) | |
| 10 | Electrical Output | Voltage Regulation: +1% on mains / batteries | |
| 11 | Electrical Output | Overload capacity: 125% for 5 min., 110% for 10 mins. | |
| 12 | Electrical Output | Waveform; Pure sine Wave | |
| 13 | Protection | Electronic Overload sensing and circuit breaker protection. | |
| 14 | Protection | Overheating, Output short circuit, low battery, input over/under voltage etc. | |
| 15 | Battery type | Sealed Maintenance Free Battery (Li-Ion), mains & Battery with necessary indicators, alarms and protection with proper battery. | |
| 16 | Back up Time | Minimum 1 hour backup on rated load. Bidder to submit calculations. | |
| 17 | DC Voltage | 48 V nominal | |
| 18 | Charging features | Adjusted to charging rate suitable for Li-Ion battery (2 hours charging)<br>1. Uncontrolled rectifier / CVCC with high efficiency and reliability.<br>2. Low battery protection to avoid deep discharging of batteries<br>3. Self-test diagnostic feature. | |
| 19 | Other features | UPS Bypass automatic on Overload or UPS failure | |
| 20 | Other features | Monitoring Panel with LCD display to provide following Information:<br>1. Input / output voltage<br>2. Input / output frequency<br>3. Load current<br>4. Charging current<br><br>LED Display for: UPS on, battery operation, bypass, alarm battery charge level, etc.<br>Alarms for: Mains failure, low battery, overload etc. | |
| 21 | Other features | RS 232 Standard Interface Port / Standard Port in conjunction with UPS monitoring software provides information about UPS health, status, battery back up etc. | |

| | | | |
|---|---|---|---|
| 22 | Environment | Operating Temperature 0 – +50 degree C,<br>For Li-Ion Battery: Operating Temperature 0 – +55 degree C, Storage 0 - +60 degree C | |
| 23 | Environment | Humidity: 0 – 95% RH non – condensing<br>For Li-Ion Battery: 0 – 85% RH non – condensing | |
| 24 | Environment | Audible Noise < 50 dB (A) | |
| 25 | Mandatory compliance | Safety certified to IEC standards / UL standards or as applicable in Indian law. | |
| 26 | Mandatory compliance | EMC certified to IEC standards | |
| 27 | Mandatory compliance | ISO 9001:2000 and ISO 14001 certified ETDC/ERTL test reports for above specifications. | |
| 28 | Mandatory compliance | Dimension Light weight / Smaller Footprint. | |
| 29 | Life Cycle | Minimum 5000 cycles @ depth of discharge 80% upto 45 degree c | |

**5.9 Surge Protector**

| | **Functional Specification of Surge Protector** | |
|---|---|---|
| **SN** | **Description** | **Compliance (Yes / No)** |
| 1 | Requirement for effective transient protection: | |
| 2 | Suitable surge protector devices (such as MOV's & suppressor diode & G.D Tube) having high surge handling capability, fast response time, low clamping voltage, etc., shall be incorporated in the communication equipment subsystems offered, to ensure that the latter withstands the conditions mentioned above without any damage or permanent degradation in performance throughout the system lifetime. | |
| | **Technical Specification of Surge Protector** | |
| **SN** | **Parameters** | **Compliance (Yes / No)** |
| 1 | The selection criteria for such devices shall include, but not limited to, the following: | |
| 2 | Reverse Stand-off Voltage: At least twice the maximum operating voltage. | |
| 3 | Pulse Power Rating: This shall have a value to handle the peak pulse power of the transients and ensure their decay in less than 10% of the rise time for the worst pulse likely to be encountered from all possible sources including lightning and transients from overhead traction power system. | |
| 4 | SPD should be capable enough to handle a surge current 10kA (8/20µs) impulse for Power & Telecom Network application. | |
| 5 | SPD response time should be <25ns. | |
| 6 | The devices shall be tested against IEC 61643-1:2005, IEC 61643-21:2000 IEC<br>61643-21:2015 or UL 1449. | |
| 7 | SPD Should have Separate Earthing Terminal | |

| | | |
|---|---|---|
| 8 | SPD Max. Continuous Operating Voltage (AC) should be 57V DC | |
| 9 | SPD Protection Level (Up) Should be < 600V | |

**5.10 Enclosure for IoT Gateway/UPS and other devices.**

| SN | Parameter | Minimum Specifications | Compliance (Yes/No) |
|---|---|---|---|
| 1 | **General Requirement** | All the junction boxes shall be out door typewith ***IP67*** protection from rain, water.<br>Provision for theft prevention.<br>(Expected outdoor temperature 50-degree C). | |
| 2 | **General Requirement** | 1.5 mm steel sheet, profiled frameconstruction consisting of 9 folded rolled hollow sections punched on a 25mm DIN Pitch pattern<br>Front and rear 2 mm thick sheet steel door with PU Foamed Seal (Gasketing) with removable galvanized rectangular frame with holes on a 25 mm DIN pitch pattern with min 2-point locking system. The hinges and retainers should be made of die cast, copper nickel chrome plated with SS hinge pins. The doors should be swapped to LH if required with door opening angle 130 degree to VDI.<br><br>Top panel made of 1.5 mm thick sheet steel with PU foamed (Gasketing) bolt able from inside.<br><br>Bottom panel made of 1.5 mm thick sheet steel with PU foamed (Gasketing) with provision for fixing 4 nos of PG 29 glands.<br><br>Painting: Electro-phoretic dip coat priming to 20 Microns and then powder coated to RAL 7035 textured Pure Polyester (PP) to 80 to 120 Microns powder coated with surface finishing with nano-coating, for the best possible surface protection and corrosion resistance. Side and Wall Panels shall be double wall<br>constructed, with fixing bolts internal to the cabinet. | |
| 3 | **General Requirement** | Should be outdoor type, Floor mounting/Wall mounting with2-point locking option, suitable to mount the switches and required UPS. The opening lever/handles shall be made of metal. EachCabinet will be mounted on a raised height concrete Plinth, 600 - 1000 mm high, as per site requirements. | |
| 4 | **General Requirement** | The cabinet will be provided with a dimensionof minimum 300mmW x 600mmH x 300mmD with mounting arrangement suitable for the mounting of the associated | |

| | | | |
|---|---|---|---|
| | | network, power, UPS and Split Battery components securely and safely within the cabinet. | |
| 5 | **General Requirement** | 2 x 5 way/15 Amp PDU's will be provided to support the site equipment. 2 x thermostat controlled 230V AC Fans with 100% DutyCycle with Filter and 2X Filter units with IP55Rating with rain Canopy shall be fitted to the front door of the cabinet to provide ventilationto cool the equipment. Fan and Cabinet shouldbe from same OEM for better SLA and provision to drive power for the camera is required. | |
| 6 | **General Requirement** | 75mm Rain canopy on Top with all around projection of the enclosure such that that rain water, water logging shall not penetrate in the junction box and hamper working of the system, cable entry with glands. | |
| 8 | **General Requirement** | Small Junction box for mounting the electric meter with viewing window should be provided for mounting Electrical Meter and Fuse and MCB with separate lock for utility power connection, as per commencement board, rules. | |
| 9 | **General Requirement** | Protection from ants, bugs and other small insects entering into the enclosure | |
| 10 | **Standard and Support** | Regulatory Standard Compliance: IP67 to EN60529/09.2000, ISO 9001, 14001, 18001 comply with EIA 310, DIN 41494 and IEC297 standards. The system should not be an end of life / end of service product. | |

**Instrument Logical Diagram**

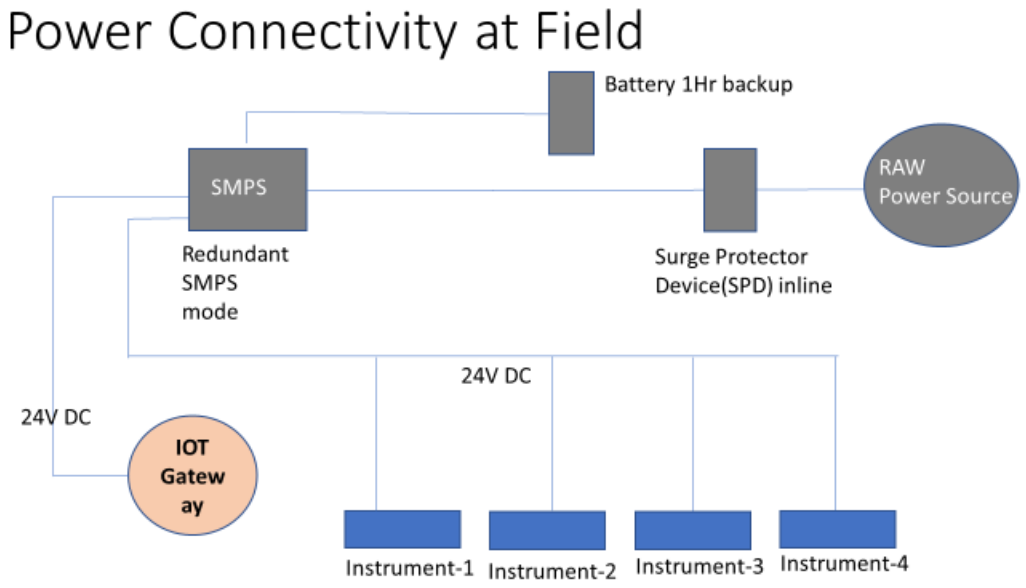

**5.11 Water Quality Sensors (**Turbidity Sensor, pH sensor, Total Dissolved Solids, Residual Chlorine)

Quality of water is an important aspect of potable water and with the proliferation of IOT based real time sensors most of the parameters can be monitored on real time basis, ensuring quality of water is a priority and with respect to that, these sensors has to be deployed in identified UGTs at both WTPs Basai and Chandu and show the real time data on IOT Application dashboard, connected through MODBUS. All the cabling and conduits to install and connect the sensors to IOT gateway must be rugged and water resistance.

| SN | Quality Sensor Type | Sample Range |
|---|---|---|
| 1 | Turbidity Sensor | 0.1-500 NTU |
| 2 | pH sensor | 0-14 |
| 3 | Total Dissolved Solids | 0-1999 uS/cm2 |
| 4 | Residual Chlorine | 0-40mg/L |

**The data from Lab Based as well as Online Sensors must be visible in ICCC as well as GMDA App "myGurugram" & Water Mobile App "Jal Mitra" as the quality of water.**

**All Field Instruments / Sensors to have the following:**

A. Should be CE/UL Certified
B. Should have individual serial numbers with calibration and traceability certificates
C. Should have option of site calibration and validation
D. Should be of the same make to ease installation, commissioning and post handover services.
E. Should have manufacturers' sales and service office in India mandatorily.
F. All Certificate copies to be submitted for approval.
G. All the agents-based instruments must have nontoxic reagents, NaCl and CaCl2.
H. All cabling must be anti-corrosive.
I. All instruments must be SS316L grade quality wherever applicable.
J. All instruments must be calibrated to provide the accurate data.

**5.11.1 pH Transmitter with Sensor:**

| SN | Minimum specifications | Compliance (Yes/No) |
|---|---|---|
| 1 | Sensors shall be UL / CE listed. pH Transmitter should be wall mounted with inbuilt option of DIN Rail mounting with 0 – 14% Range. The transmitter should have zero and span adjustments for pH of 4 and 7. | |
| 2 | pH Sensor should be able to withstand 7 bar pressure and temperature of 0 to 60-degree C. | |
| 3 | The pH sensor should be replaceable. Thermowell/Protective Sleeves/Flow through for electrode protection compulsory | |
| 4 | The output should be 4 – 20mA, RS-485 MODBUS, with 230V AC Power Supply. | |
| 5 | The accuracy for the transmitter should be ±0.5% of F.S with ±0.1% Drift / year. | |
| 6 | The enclosure should be fire retardant ABS with IP 68 Protection. | |
| 7 | The sensor should be calibratable and rearrangeable by COML protocol on site | |

### 5.11.2 TDS Transmitter with Sensor:

| SN | Minimum specifications | Compliance (Yes/No) |
|---|---|---|
| 1 | Sensors shall be UL / CE listed. TDS Transmitter should be wall mounted with 0 – 7000 ppm Range. The transmitter should have zero and span adjustments. | |
| 2 | TDS Sensor should be able to withstand 7 bar pressure and temperature of 0 Degree to 60°C.The TDS sensor should be replaceable. Thermowell for electrode protection compulsory. | |
| 3 | The output should be 4 – 20mA / RS-485 MODBUS, with 230V AC / 24V DC Power Supply. | |
| 5 | The accuracy for the transmitter should be ±0.5% of F.S with ±0.1% Drift / year. | |
| 6 | The enclosure should be made of Fire-retardant ABS with IP68 Protection. | |
| 7 | The sensor should be calibratable and rearrangeable by COML protocol on site | |

### 5.11.3 Dissolved Chlorine Transmitter:

| SN | Minimum specifications | Compliance (Yes/No) |
|---|---|---|
| 1 | Sensors shall be UL / CE listed. TDS Transmitter should be with 0 – 10 ppm Range. | |
| 2 | Body material should be PVC and Membrane cap material should be PVC housing, Proprietary membrane. | |
| 3 | The output should be 4 – 20mA / RS-485 MODBUS, with 230V AC / 24V DC Power Supply. | |
| 4 | Maximum pressure should be 14.7 psig and temperature 0 to 60°C with integrated temperature compensation. | |
| 5 | The accuracy for the transmitter should be ±0.5% of F.S with ±0.1% Drift / year. | |
| 6 | The enclosure should be made of Fire-retardant ABS with IP68 Protection. | |
| 7 | The sensor should be calibratable and rearrangeable by COML protocol on site | |

### 5.11.4 Turbidity:

| SN | Minimum specifications | Compliance (Yes/No) |
|---|---|---|
| 1 | Sensors shall be UL / CE listed. The sensor should be noise compensated. | |
| 2 | The measurement principle of analyzer shall be Direct Potentiometry. Transmitter should be with 0 – 2000 NTU Range. The Sensor material should be SS316L and the principle should be of light scattering. | |
| 3 | The output should be 4 – 20mA / RS-485 MODBUS, with 230V AC / 24V DC Power Supply. | |
| 4 | Maximum pressure should be 14.7 psig and temperature 0 to 60°C with integrated temperature compensation**.** | |
| 5 | The accuracy for the transmitter should be ±0.5% of F.S with ±0.1% Drift / year. | |
| 6 | The enclosure should be made of Fire-retardant ABS with IP68 Protection. Cable should be non-corrosive. | |

| | | |
|---|---|---|
| 7 | The sensor should be calibratable and rearrangeable by COML protocol on site | |

**5.12 Pump Monitoring System at WTP Basai and Chandu:**

Bidder needs to do survey to identify the components needed to monitor the Pumps deployed at both WTPs, the existing Pump connected through control panel must be installed with these items to IoT gateway for the data acquisition. All these compliances must be submitted in OEMs letter head.

**5.12.1 Power Contactor:**

**5.12.1.1 Power Contactor Type-1:**

| SN | Item | Minimum specifications | Compliance Yes / No |
|---|---|---|---|
| 1 | Rating | 800A/400A | |
| 2 | Coil voltage | 220-230V DC/220-240 V AC | |
| 3 | Poles description | 3P | |
| 4 | motor power kW | 50 kW at 1000 V AC 50/60 Hz (AC-3)<br>450 kW at 500 V AC 50/60 Hz (AC-3)<br>475 kW at 660...690 V AC 50/60 Hz (AC-3)<br>110 kW at 400 V AC 50/60 Hz (AC-4)<br>450 kW at 380...400 V AC 50/60 Hz (AC-3)<br>450 kW at 415 V AC 50/60 Hz (AC-3)<br>450 kW at 440 V AC 50/60 Hz (AC-3)<br>250 kW at 220...230 V AC 50/60 Hz (AC-3) | |

**5.12.1.2 Power Contactor Type-2:**

| SN | Item | Minimum specifications | Compliance Yes / No |
|---|---|---|---|
| 1 | Rating | 400A | |
| 2 | Coil voltage | 220-240 V AC | |
| 3 | Poles description | 3P | |
| 4 | motor power kW | 110 kW at 220...230 V AC 50/60 Hz<br>200 kW at 380...400 V<br>220 kW at 415 V<br>250 kW at 440 V<br>257 kW at 500 V<br>280 kW at 660...690 V | |

**5.12.2 Auxiliary Contactor:**

| SN | Item | Minimum specifications | Compliance Yes / No |
|---|---|---|---|
| 1 | Rated operational voltage | 690 V AC 25...400 Hz | |
| 2 | control circuit type | AC at 50/60 Hz | |
| 3 | [Uc] control circuit voltage | 230...240 V AC 50/60 Hz | |
| 4 | pole contact composition | NO + 2 NC | |

**5.12.3 Add-on Block Contact:**

| SN | Item | Minimum specifications | Compliance Yes / No |
|---|---|---|---|
| 1 | Rated operational voltage | 690 V AC 25...400 Hz | |
| 2 | control circuit type | AC at 50/60 Hz | |
| 3 | [Uc] control circuit voltage | 230...240 V AC 50/60 Hz | |
| 4 | pole contact composition | 2 NO + 2 NC | |

### 5.12.4 Star Delta Timer:

| SN | Item | Minimum specifications | Compliance Yes / No |
|---|---|---|---|
| 1 | Rated supply voltage | 24...240 V AC/DC 50/60 Hz | |
| 2 | time delay range | 0.3...30 s | |
| 3 | [contacts type and composition | 2 C/O timed contact, cadmium free | |
| 4 | pole contact composition | 2 NO + 2 NC | |

### 5.12.5 Air Circuit Breaker:

| SN | Item | Minimum specifications | Compliance Yes / No |
|---|---|---|---|
| 1 | Rating | 2000A 3P 50/60 Hz | |
| 2 | Breaking Capacity | 65 kA Icu at 220...440 V AC 50/60 Hz conforming to IEC 60947-2 | |
| 3 | Fault indication | Short-circuit<br>Overload<br>Internal fault | |
| 4 | Protection type | Instantaneous short-circuit protection<br>Overload protection (long time) | |

### 5.12.6 MCCB:

| SN | Item | Minimum specifications | Compliance Yes / No |
|---|---|---|---|
| 1 | Rating | 400A 3P 50/60 Hz | |
| 2 | Breaking Capacity | 70 kA Icu at 220/240 V AC 50/60 Hz conforming to IEC 60947-2<br>50 kA Icu at 380/415 V AC 50/60 Hz conforming to IEC 60947-2<br>42 kA Icu at 440 V AC 50/60 Hz conforming to IEC 60947-2 | |
| 3 | Protection type | Short time short-circuit protection<br>Overload protection (long time)<br>Instantaneous short-circuit protection | |

### 5.12.7 MFM – Multi Functional Meter:

| SN | Item | Minimum specifications | Compliance Yes / No |
|---|---|---|---|
| 1 | Description | 3-phase electrical instrumentation and load management | |

| | | | |
|---|---|---|---|
| 2 | Communication | Two Terminals + 1 GND for the RS 485 communication port | |
| 3 | Smart Keys | five smart keys to navigate through the display pages. | |
| 4 | Special Features | Global: CE, UL marks, Digital display & Analog load bar indicators, Bright Red LED display | |
| 5 | Built In Decoders | CE, UL listed (US & Canada), C-Tick certified | |

### 5.12.8 Numerical Protection Relay:

| SN | Item | Minimum specifications | Compliance Yes / No |
|---|---|---|---|
| 1 | power supply | 24...240 V DC<br>100...230 V AC | |
| 2 | protection functions | Phase overcurrent 50/51<br>Earth fault overcurrent 50N/51N<br>Capacitor bank unbalance 51C<br>Broken conductor 46 I2/I1<br>Current unbalance 46 I2/I1<br>Cold load pick-up<br>Switch ON to fault (SOTF)<br>H2 detection<br>H5 detection<br>Breaker failure 50BF<br>Recloser 79<br>Thermal overload protection 49<br>Phase undercurrent 37<br>Negative sequence overcurrent 46<br>Excessive starting time, locked rotor 48/51LR<br>Motor restart inhibition 66<br>Capacitor overvoltage 59C<br>Lockout relay 86<br>CT supervision 60<br>Programmable stages 99<br>Programmable logic<br>Programmable curve | |
| 3 | measurement functions | Current 3-phase<br>Current zero sequence<br>Current positive sequence<br>Current negative sequence<br>Current ratio of negative and positive<br>Frequency<br>Phasor diagram of currents or voltages<br>Current 2nd, 15th harmonics with THD | |
| 4 | controllable switchgear devices | 4 controlled + 2 monitored objects | |

### 5.12.9 Temperature Switch:

| SN | Item | Minimum specifications | Compliance Yes / No |
|---|---|---|---|
| 1 | Supply. | 110VDC or 220 VDC | |
| 2 | Sensor Input | 2 Nos. independent inputs of RTD, PT-100, 3 Wire type | |
| 3 | Setting Range | 30 to 100 Deg. C | |
| 4 | Set Point | 1 No. adjustable by means of single turn Potentiometer | |
| 5 | Output | 1 C/O Relay contacts | |
| 6 | Contact Rating | Rated for 3 Amp. at 230VAC or 24 VDC on resistive load | |
| 7 | Relay Logic | Relay energizes when any of the input RTD temperature or both RTD temperatures exceeds the set point | |
| 8 | LED Indication | Red LED - supply is Switched ON & Green LED - Relay Energized condition | |

### 5.12.10 PLC specification

| Sr. No. | Item | Minimum specifications | Compliance (Yes/No) |
|---|---|---|---|
| 1 | Rack | Internal Power Supply Rack Based with rack bases power supply no bulk power supply. | |
| 2 | No. of Racks Supported | Minimum 4 Racks | |
| 3 | Integrated connection type | 1 Ethernet TCP/IP for service port 2 Ethernet TCP/IP for device network USB type mini B | |
| 4 | Number of remote I/O station | 8 - 2 rack(s) per remote drop | |
| 5 | Number of distributed equipment | Minimum 64 | |
| 6 | Communication module processor capacity | 2 Ethernet communication module | |
| 7 | Communication service | DIO scanner<br><br>RIO scanner | |
| 8 | Memory | 4 GB for data storage Integrated RAM | |
| 9 | MTBF | 600000 H or more then | |
| 10 | Product Certification | CE and UL | |

| | | | |
|---|---|---|---|
| 11 | Vibration resistance<br><br>Shock resistance<br><br>Ambient air temperature for operation<br><br>Ambient air temperature for storage<br><br>Operating altitude<br><br>Relative humidity | 3 gn<br><br>15 gn 0...60 °C<br><br>-40...85 °C<br><br>0...2000 m<br><br>2000...5000 m with derating factor<br><br>5...95 % at 55 °C without condensation | |
| 12 | Environmental characteristic | Corrosion resistance<br>Salt mist<br>Dust resistant<br>Hazardous location | |
| 13 | Cyber Security | Archiles Level 2 | |

### 5.12.11 Industrial HMI specification

| SN | Item | Minimum specifications | Compliance Yes / No |
|---|---|---|---|
| 1 | Power Supply | 110VAC to 220 VAC | |
| 2 | Backlight span | 20,000hrs | |
| 3 | Memory description | Internal, 256 MB or more for application<br>Internal DDR, 128 MB<br>Internal, 128 kB for backup | |
| 4 | Ambient Temperature | ambient air temperature for operation<br>0…50 °C<br>ambient air temperature for storage<br>-20…60 °C | |
| 5 | IP degree of protection | IP 65 | |
| 6 | Screen type | Industrial IPS / Touch panel. | |
| 7 | Screen size | Min 10.1 inch – 1200 x 800 | |
| 8 | Display | Colored display | |
| 9 | Input | HDMI, RJ-45, PoE/PoE+, USB | |

### 5.13 Workstation:

| S.No | Item | Minimum Requirement | Compliance (Yes/No) |
|---|---|---|---|
| 1. | Processor | Intel Xeon E3 @ 3.00 Ghz or i7 Quad core Processor with 20 MB cache (64 bit) | |
| 2. | Memory/FSB | 16 GB Memory, DDR4, FSB 2400 $MH_z$ | |

| | | | |
|---|---|---|---|
| 3. | Integrated Intel Graphics Card | 16 GB | |
| 4. | HDD | 2 TB SAS Hard drive @10,000 rpm | |
| 5. | I/O | I.O ports & wireless card standard. LAN, RS232/422/485, HDMI etc. | |
| 6. | Display | 23/24 inch | |

**5.14 Installation Materials Specifications:**

**1. 40mm HDPE Pipe:**

**The minimum technical requirements for 40mm HDPE Pipe are as follows:**

| SN | Parameter | Minimum Specifications | Compliance (Yes / No) |
|---|---|---|---|
| 1 | 40mm HDPE pipe | The 40/33 mm HDPE ducts TEC approved suitable for outdoor and underground installations.<br>Duraline / Equivalent or superior makes shall be considered. | |
| 2 | Outside Diameter | 40mm+0.4mm | |
| 3 | Wall Thickness | 3.1mm ±0.4mm | |
| 4 | Thickness of Permanent Lubricant | ≥0.4mm | |
| 5 | Ovality | Max. 1.4mm | |
| 6 | Operating Temperature | 0°C to 70°C | |
| 7 | Underground Life Expectancy | ≥25 Years | |
| 8 | Colour | The HDPE ducts colours shall be maintained throughout the useful life of the duct. | |
| 9 | Continuity | All HDPE ducts shall be continuous. The HDPE ducts shall be joined using approved industry standard couplers | |
| 10 | UV degradation | Suitable ultra violet stabilizers may be used for manufacture of the PLB HDPE pipe to protect against UV degradation when stored in open for a minimum period of 8 months. | |
| 11 | Material of Inner Layer | In the inner layer of PLB HDPE pipe, the friction reducing, polymeric material to be used as the inner layer lubrication material shall be integral with HDPE layer. The lubricant materials shall have no toxic or skin hazards for safe handling. | |

| | | | |
|---|---|---|---|
| 12 | Workmanship | The finished pipe shall be of good workmanship such that the pipe is free from blisters, shrink holes, flaking, chips, scratches, roughness, break and other defects. The pipe shall be smooth, clean and in round shape, without eccentricity. The ends shall be cleanly cut and shall be square with axis of the pipe. | |
| 13 | Length for supply | As per site requirement. | |
| 14 | Markings on Pipe | Manufacture's name or trade mark<br>Year of manufacturing<br>Type of HDPE pipe and size<br>Running length marking. | |

2. 40 mm HDPE Coupler:

The minimum technical requirements for the 40 mm HDPE Coupler are as follows:

| SN | Parameter | Minimum Specifications | Compliance Yes / No |
|---|---|---|---|
| 1. | Type of Coupler | Push-Fit type 40mm Dia. Coupler | |
| 2. | Pulling Force | ≥330 kgf | |
| 3. | Construction Material | HDPE | |
| 4. | Capability | The 40 mm HDPE Coupler shall be able to provide a durable airtight and watertight joint between two pipes without deteriorating the strength of the pipes. | |

3. End Plug (Rubber Bush) for 40mm HDPE Pipe

The minimum technical requirements for the 40mm End Plug (Rubber Bush) are as follows:

| SN | Parameter | Minimum Specifications | Compliance Yes / No |
|---|---|---|---|
| 1. | Type of End Plug (Rubber Bush) | **Rubber Bush**. To prevent entry of rodents into HDPE/PLB pipes, the ends of HDPE/PLB pipes are sealed at every manhole and joint using rodent resistant hard rubber bush (cap) after optical fiber cable is pulled/ blown. The rubber bush should be manufactured from hard rubber with grooves and holes to fit into 40/33 mm HDPE/PLB pipe (class V), so that it should be able to prevent the entry of insects, rodents, mud, and rainwater into the HDPE/PLB pipe. It should weigh 150 gms (with a tolerance of ± 5%. It should conform to specification No. G/CDS-05/01 dated December 1994 and revised upto date. | |
| 2. | Life expectancy | ≥25 Years | |

| | | | |
|---|---|---|---|
| 3. | End Plug | The end plug once installed shall make the laid HDPE duct air tight. | |

**4. Power Cable Specifications:**

| SN | Parameters | Minimum Specifications | Compliance (Yes/No) |
|---|---|---|---|
| **1.** | Type of Cable | Armoured, Flame Retardant (FR). | |
| **2.** | Standard applicable in general (Latest amendment to be referred if any) | IS:7098 (Part-1), IS:8130, IS:5831, IS:10810, IS:3975, ASTMD:2843, ASTMD:2863, IEC-754-1, IEC:60332 (Part-1), IEC:60332-3-23, IEEE:60383 | |
| **3.** | Voltage Grade | 1.1kV | |
| | **Conductor** | | |
| **4.** | Material | Copper | |
| **5.** | Grade and Class | Stranded, plain annealed high conductivity, Class 2 | |
| **6.** | Standard Applicable | IS: 8130 | |
| **7.** | Shape | Circular – for all sizes | |
| **8.** | Min. number and diameter of strands for main and neutral conductor | As per Table-2 of IS: 8130 | |
| | **Insulation** | | |
| **9.** | Material | Cross-Linked Polyethylene (XLPE) | |
| **10.** | Standard Applicable | IS: 7098 (Part-1) | |
| **11.** | Continuous withstand temperature | 90°C | |
| **12.** | Short-circuit withstand temperature | 250°C | |
| **13.** | Nominal Thickness of insulation | As per IS: 7098 (Part-1) | |
| | **Inner Sheath** | | |
| **14.** | Material | Extruded HRPVC Type ST-2 | |
| **15.** | Standard Applicable | IS: 7098 (Part-1) & IS: 5831 | |

**5. Armoured Signal Cable Specifications:**

| S. N | Parameters | Minimum Specifications | Compliance (Yes/No) |
|---|---|---|---|
| 1 | No. of pairs | 1Pair/2 Pair | |
| 2 | Twisted pairs/ over lay | MIN. 10 TWIST PER METER / YES | |
| 3 | Individual pair shielding/ material | YES / AL. MYLAR TAPE | |
| 4 | Overall shield / material | YES / AL. MYLAR TAPE | |
| 5 | Type of screening | 100 % coverage with 25 % overlaps | |
| | **CONDUCTOR** | | |
| 6 | Conductor material. / type | Tinned copper / stranded | |
| 7 | Conductor standard | IS- 8130 | |

| | | | |
|---|---|---|---|
| 8 | Construction | Multi -stranded | |
| 9 | Conductor cross section | 0.75 Sq.mm for all pair cables and 1.5sqmm for TRIAD cable | |
| 10 | Conductor insulation / standard | LDPE / IS 6474 or better | |
| 11 | Insulation color | WHITE(+VE) & BLUE (-VE) for all pair cables and RED, Green, White for TRIAD Cable | |
| | **CONSTRUCTION** | | |
| 12 | Inner sheath / color | FR PVC / Black (ST-2-IS5831) | |
| 13 | Outer sheath / color | FR PVC 1.6 mm Thick / Light Blue (ST-2-IS5831) | |
| 14 | Drain wire material (under shield) | Tinned copper | |
| 15 | RIP cord | Required below inner sheath | |
| 16 | Armor type | Galvanized steel | |
| 17 | Core identification / numbering | Pair no. on each core at every 1meter | |

**6. Other Installation Items (as per Standard / Reputed makes):**

| **SN** | **Items** |
|---|---|
| 1 | L-Type Instrument Stand & Enclosure |
| 2 | Battery Enclosure |
| 3 | RTU Safety Cage Frame |
| 4 | Process connection/Flange for LT |
| 5 | PV Conduit |
| 6 | JB between LT and RTU |
| 7 | Erection Hardware's (Fasteners/Cable ties/cable lux/GI Clamp) |

***Note: The above installation material shall be supplied by the bidder for each site as per site requirement under respective item "Supply and Installation". No extra cost will be payable by GMDA for installation material.***

**6.0 Documents to be submitted by the Contractor:**

6.1 The contractor shall indicate the Make and Model of all the instruments and submit the detailed technical catalogue indicating all the technical features of the offered products, so that compliance with the specifications can be ensured.

6.2 The Contractor shall submit the drawings and documents pertaining to the instruments and flow control valve system for approval by the department after award of Contract before procurement.

6.2.1.1 Data sheets indicating the technical details viz. make, model, range, size, accuracy, power supply requirements, materials of construction of various parts etc.

6.2.1.2 A list of instruments of each type in line with the contract requirements indicating tag number, type, location of installation, ranges etc.

6.2.1.3 Technical catalogues and brochures indicating all the technical features of the instruments.

6.2.1.4 The protocol details of the digital communication which will be required for interfacing with industry standard Communication IoT Gateway.

6.2.1.5 The Contractor shall also submit the following documents pertaining to the manufacturer's documents for instruments / flow control valves:

- Quality Assurance Plan and test procedures at the manufacturer's works.
- Test and Calibration reports pertaining to the instruments being supplied.
- Installation drawings for the instruments as per the manufacturer's recommendations and to suit the site conditions.
- Loop diagrams for cable connections
- Cable schedule and interconnection schedules
- Service manuals for the instruments indicating procedures for troubleshooting, replacement of modules, calibration and test procedures etc.
- List of recommended spare parts required for 10 years' maintenance.

**7.0 Tests and Inspection:**

**(i) Factory Acceptance Tests:**

The instruments shall be tested as per the Quality Assurance Plan to be submitted by the contractor for approval of the department. The tests to be carried out at the Manufacturer's works shall include the following routine tests for all the instruments as applicable.

- Hydrostatic tests for minimum 1.5 times of the working pressure or the rated pressures, whichever is higher.
- Calibration tests for 0%, 25%, 50%, 75% and 100% of the range on a standard test bench. The test equipment shall hold a valid calibration certificate from National / International Laboratory.
- Over-range test.

The contractor shall offer the inspection by the department's representative. The type tests shall instrument for include the following:

- Heat and humidity cycle test for electronic modules.
- EMI tests.
- Weather-protections Tests
- Material of construction composition.
- The Contractor shall submit compliance certificates for the quality control and various tests performed.

**(ii) Site Acceptance Tests**

After the instruments are installed the Contractor shall perform the following pre- commissioning and commissioning tests as applicable.

- Correctness of the installation as per the installation recommendations of the Manufacturer.
- Hydraulic tests for connecting pipes, joints etc.
- Loop checking as per the loop diagram, cable schedule and cable termination diagram
- Functioning of the instruments on powering up.
- Functioning of the system on installation and commissioning of the entire measurement system.
- Testing of the interface the communication IoT Gateway.
- The power supply units and cables required for pre-commissioning shall be provided by the Contractor.

**8.0 ADDITIONAL CONDITIONS FOR EQUIPMENT PROVIDED.**

- Tenderers have to submit following document.
- Functional & Technical specifications, model No. of equipments unit and otherinformation along with a (Copy of operational manual only by L-1)

A. Backup Guarantee of Principal / Manufactures.

B. List of works executed & their performance certificates of similar work in addition to the above contractor will have to arrange certificate before payment of the work from OEM that the installation have been checked by them and the material installed is genuine and OEM stands for backup guarantee of the material / equipment/spares.

C. Manufacturer authorization form (MAF) from OEM should be submitted by all the bidders.

D. OEM should certify regarding technicality of the component installed at site as per DNIT.

E. L-1 should submit the drawing, layout plan, wiring drawing etc. along with password etc.

**2.** The technology of system must be latest but not for earlier than that two years from date of tender to this effect must be given by the original manufactures.

**3.** Tenderer will ensure that the equipment supplied under this contract are vermin proof and defects arising due to rendering any insect or reptile etc. will be made good by the tenderer.

**4.** The contractor will be on turn key basis. Any essential spare piece / part of equipment, not mentioned in NIT/ tender, to complete the job will include in the rates and no extra payment will be made for such item/ items which are required for installation, commissioning, testing or to make the system operational i.e. make the job complete in al respect.

**5. Life of System: -** The system is deemed to have life span of 07 years. Under no circumstances the system will be declared obsolete during above 07 years period by the firm/ manufacture from the date of issue of work order by GMDA.

**6. GUARANTEE-**The contractor shall guarantee that the material and workmanshipof the apparatus installed by him under these specifications are new and first classin every respect and for that he will make good any defect for the period of minimum 12 months guarantee period offer by the manufacturer firm of apparatusfrom the date of completion of 30 days trouble free operation.

**7. Inspection: -** The equipment / material may be got inspected by firm from Engineer-in-Charge or his representative in token of approval of material before the same is transported to the site work. Manufacture test certificate should be given by the Contractor for system and instruments**.**

**8.** After completion of work the Fire Alarm System shall be got checked / inspected from the concerned Fire Officer and his satisfactory inspection report shall be supplied to the department and the charges to this effect shall be borne by the firm: Not Applicable.

**9. COMPLETION-** After completion of maintenance work or its termination by deptt. midway, due to any reason what-so-ever, the firm will hand over the complete system in working order with every part

intact. In case, if any part is found missing or of substandard specifications, due recovery will be made for such a deficiency and measures to effect such recovery as deemed fit, will also be taken against the firm.

**10.** After final completion of system, the same will be inspected by the Engineer/ Technical person of manufacturer to ensure that installation is technically correct. Necessary certificate to this effect shall also be submitted duly signed by the competent person.

**11.** The contractor/firm shall have to supply manufacturer's test certificate of various equipment.

**12.** **FREE MAINTENANCE -** After 30 days trouble free operation, mtc. service for the system shall be provided free for a period of 12 months. The mtc. service shall include at least monthly examination of installation during regular working hours by trained staff and shall include all necessary adjustment, overhauling, cleaning, rectification of defects including replacement of defective parts with genuine standard parts only as required to keep the equipment in proper operation.

**13.** There shall not be delay of more than 24 hours in attending to minor break- down/defect and 48 hours for the major breakdown / defect reported in station.

**14.** In case the firm does not adhere to the schedule of monthly examination and attending of complaints as mentioned above, the same shall be got done and attended to at the risk and cost of firm and amount the expenditure incurred will be recovered from the firm from his pending dues / security deposit.

**15.** **Annual Maintenance Contract: -** The AMC charges shall be as indicated under "Special Conditions for Comprehensive Maintenance Contract" The performance warranty for AMC shall be 5% of the main agreement or as per latestGovt. instructions shall be withheld from each running bill of the agency, which can be refunded against the Bank Guarantee of equal amount on completion of works**.**

**16.** Contractor will provide copy of original bill of all items from OEM/ authorized distributor to ascertain backup warranty from OEM on later stage.

## 9.0 SPECIAL CONDITIONS FOR COMPREHENSIVE MAINTENANCECONTRACT

After completion of the installation the Agency / Bidder shall get the installations inspected from authorized person deputed by department and prepare as built drawings with complete detail of installations along with inventory of equipment with their make Sr. No. model size etc. the firm shall also obtain a certificate of OEM of the equipment installed for proper installation and backup guarantee by OEM of major items.

The Agency / Bidder after successful completion of the work, shall stand guarantee for all material, equipment and installation for one year from date of completion. This will include repair, replacement and all labour of all installation including consumable items if any. This will be treated as free maintenance period. The Agency / Bidder will hand over the system as per para above before completion of Defect Liability period / free maintenance period / Defect Liability of period will be considered as extended till hand over the system. The decision for allotment of maintenance work will be on the discretion of client department. The decision for allotment of operation and maintenance work will be allotted on the discretion of client department.

After completion of free maintenance period of one year from the date of completion as above, the firm will be bound to carry out paid comprehensive maintenance i.e. repair and replacement of all installations including consumable items etc. and operation of system for next Five years.

**NOTE: -**

The Agency / Bidder would submit an affidavit in the technical bid that he shall undertake to carry comprehensive maintenance as brought out in the DNIT. In case of failure to do so, the department is at liberty to take any due action including proceeding under criminal negligence against the firm / contractor. Payment of this maintenance will be done on quarterly basis. After deducting the statutory taxes.

Other terms and conditions of comprehensive maintenance contract have been as depicted under heading addition condition for free maintenance period and annual maintenance contract of this DNIT.

**IMPORTANT: -**

After completion testing and commissioning the installations will be handed over to the authorized authority of GMDA. The contract for operation and comprehensive maintenance contract on the rates terms and conditions for the period as per this DNIT / Agreement will be done with the firm by authorized authority of GMDA. The Agency / Bidder will be bound to carry out the comprehensive maintenance and operation contract accordingly for which necessary payments etc. will be done by GMDA.

**Note: - Operation means day and night around the year (24x7x365).**

## Section 5
## Tender Evaluation Criteria

**Process of Evaluation:** The Process of Bid evaluation is to be carried out in 2 Phases:
The evaluation will consist of the following phases:

- **Phase I: Evaluation of Eligibility Criteria & Technical Bids**
- **Phase II: Evaluation of Financial Bids**

**Phase I: Evaluation of Eligibility criteria& Technical Bids:**
In this part the Bidders will be evaluated for the fulfillment of the conditions specified in the Eligibility criteria mentioned in ITB Clause and only those bidders who have qualified the Eligibility criteria will be evaluated.

The technical bid will be evaluated on the parameters described in the following section:

**Analysis of Technical bid:**
In this part, the technical bid will be analyzed and evaluated and the technical; bid marks (**TS**) shall be assigned to each bid on the basis of following evaluation matrix.

**Technical Bid Score:** The Technical Bid Score "TS" of the Bidder shall be derived as under:

**TS = (TM / TH) x 100**
where
TS is the Technical Bid Score
TM= Total Technical bid marks of the bidder under consideration
TH= Highest total Technical bid marks amongst all evaluated bids

**Technical Evaluation:**

| SN | Parameter | Max Marks | Required Document |
|---|---|---|---|
| 1 | **Company Profile and Competence** (Refer below table) | 30 | Audited Financial Statement /Auditor Certificate, MoA or company registration docs, HR declaration etc. |
| 2 | **Previous project experience** (Refer below table) | 40 | Proof of experience in the form of client citations, work orders, completion certificates to be submitted. |
| 3 | **Solution Document** (Refer below table) | 30 | Technical solution proposal and detailed write up. |
| **Total Marks** | | **100** | |
| **Cut Off Marks for qualifying** | | **70** | |

The Bid Evaluation Committee reserves the right to modify the evaluation process at any time during the Tender process, without assigning any reason, whatsoever, and without requirement of intimating the Bidder of any such changes. At any time during the process of evaluation the Bid Evaluation Committee may seek specific clarifications from any or all Bidders.

**Phase II: Evaluation of Financial Bids:**

In this phase, the Financial Bids of the Bidder who are technically compliant as per Section-4 (Scope of Work) of Bid document and who have scored more than 70% marks in Technical Evaluation shall be opened. The offers shall be evaluated and marked L1, L2, L3 etc. L1 being the lowest offer.

It shall be ensured that the offer recommended for sanction is justifiable looking to the prevailing market rates of the goods, works or service required to be procured.

- The Chief Executive Officer, Gurugram Metropolitan Development Authority Gurugram will have the right to negotiate with the successful bidder. The decision of the "The Chief Executive Officer, Gurugram Metropolitan Development Authority Gurugram" shall be final and binding on the bidders.

- The Chief Executive Officer, Gurugram Metropolitan Development Authority Gurugram will have the right to place Purchase order for items required only for **Supply, Installation, Integration and Commissioning of Centralized Integrated Water Management System (CIWMS).**

**Detailed Point System:**

| | | | | |
|---|---|---|---|---|
| **1.0** | **Company Profile and Competence** | | | **30** |
| **1.1** | No. of years' experience of the bidder in IT / ICT Infrastructure projects / Projects related to Water Management System using centralized software all.<br>**Bidder to provide copy of LOAs & Client Certificate.** | | | **10** |
| | **5 to 7 years (5 marks)** | **7 to 10 years (7 marks)** | **More than 10 years (10 marks)** | |
| **1.2** | Annual average turnover of bidder in INR or currency equivalent during the last 3 financial years, i.e. 2020-2021, 2021-2022 & 2022-2023 from IT/ ICT infrastructure projects / Projects related to Water Management System using centralized software all.<br><br>Bidder to provide copy of Certificate from CA mentioning turnover from IT/ICT infrastructure projects / Water Management System using centralized software all during last 3 financial years. | | | **5** |
| | **5 Cr to 7 Cr (2 marks)** | **7 Cr to 10 Cr (3 marks)** | **> 10 Cr (5 marks)** | |
| **1.3** | **Bidder / OEM having Certifications:**<br>i. ISO – 9001 /2014 1 Mark<br>ii. ISO – 20001 1 Mark<br>iii. ISO – 27001 1 Mark<br>iv. CMM Level 3. 1 Mark or<br>v. CMM Level 5. 2 Marks<br>Bidder to provide copy of valid certificates from Authorized Agency as on date of Bid submission. Proof in respect of Authorized Agency to be submitted. | | | **5** |
| **1.4** | The proposed Centralized Integrated Water Management Systems CIWMS for the following categories of the products / equipment offered will be evaluated as per CE/UL, COML, Common criteria certification:<br>• CE certification: (user) **(2 marks)**<br>• COML compliant **(1 mark)**<br>• Common Criteria Certified IoT Gateway/RTU **(2 marks)**<br>Bidder / OEM to provide copy of valid certificates from Authorized Agency as on date of Bid submission. Proof in respect of Authorized Agency to be submitted. | | | **5** |

| | | | | |
|---|---|---|---|---|
| **1.5** | Bidders must have 25+ employees and must have inhouse engineering, commissioning and project management team., in last 5 years & current year. Bidder to provide copy of PF Monthly Form. | | | **5** |
| | **25+ Employees (2 mark)** | **50+ Employees (3 marks)** | **75+ Employees (5 marks)** | |
| **2.0** | **Previous project experience:** | | | **40** |
| **2.1** | The bidder should have experience in implementation, setting up of Water Supply Automation including Instrumentation and utility infrastructure components and maintenance like fluid management and fluid loss detection & control / establishment of Command and Control center (or equivalent) for Centralized Water supply monitoring and control during last 7 years in State Govt. / Central Govt. / PSU / ULB / Govt. Corporation / Govt. Authority / Smart City.<br><br>Bidder to provide documentary proof comprising of LoA / PO and Completion Certificate having cost of executed work from Client. | | | |
| | 3 Projects of minimum 7 Cr each or 2 Projects of minimum 9 Cr each or 1 Project of minimum 14 Cr. **(10 marks).** | 3 Projects of minimum 9 Cr each or 2 Projects of minimum 12 Cr each or 1 Project of minimum 17 Cr **(15 marks).** | 3 Projects of minimum 11 Cr each or 2 Projects of minimum 15 Cr each or 1 Project of minimum of 20 Cr **(20 marks)** | **20** |
| **2.2** | Proof of Experience in the form of client citation, work orders, drawings or approved design document along with completion certificate to be submitted w.r.t implementation of minimum IoT Gateway in one project along with Centralized control from Command Control Center and project value is more than INR 10+ Cr. during last 7 years in State Govt / Central Govt / PSU / ULB / Govt. Corporation / Govt. Authority / Smart City.<br><br>**A.** (10-25 IoT Gateway/PLC/RTU/RPU Controller) Implementation**:** **10 marks**<br>B. (25- 50 IoT Gateway/PLC/RTU/RPU Controller) Implementation: **15 marks**<br>C. (More than 50 IoT Gateway/PLC/RTU/RPU Controller) Implementation: **20 marks**<br><br>**Note:** DDC based implementation is not applicable.<br>PLC: Programmable Logic Controller<br>RTU: Remote Terminal Unit<br>RPU: Remote Pick up Unit.<br>Bidder to provide documentary proof comprising of LoA / PO and Completion Certificate having cost of executed work from Client. along with list of locations where the IoT Gateway/PLC/RTU/RPU Controllers are installed and working along with name and location of Integrated Command Control Centre having centralized control and working as on date of Bid submission. | | | **20** |
| **3.0** | **Solution Document** | | | **30** |
| **3.1** | Understanding of Scope of work and requirements, Approach & Methodology for carrying out implementation at sites for establishing CIWMS system, design and establish connectivity to Integrated Command & Control Centre. | | | **10** |
| **3.2** | A Complete solution document containing all Hardware and Software required along with Make and Model. | | | **10** |

| | | |
|---|---|---|
| **3.3** | Approach & Methodology for providing services using Secure IoT communication-based approach & Number of services proposed to be integrated with ICCC. | **5** |
| **3.4** | Location of Maintenance / Support Centre, Simulation of the OEMs of the equipment's | **5** |
| | | |

**Note 1.0:** Only completed projects / substantially completed projects will be considered. Substantially completed projects shall include ongoing works for which payment have already been received for the value asked.

.

| S.No | Solution Document Items |
|---|---|
| 1. | **Understanding of the Project, Approach & Methodology for Implementation.** |
| | Solution Architecture including connectivity of all items including ICCC |
| | Power supply arrangement through SMPS and Battery back up for 2 Hrs |
| | Server & Storage Sizing and Requirement |
| | Operating System to be deployed |
| | Network Security/Penetration &Vulnerability |
| | Scalability, Interoperability and Modularity features considering the future expansion of the project |
| | Detailed project execution plan along with manpower deployment |
| 2(a) | **Monitoring of Power supply, Operation of DG sets, Pumps and Other related systems at WTP Basai and Chandu on real time basis and their visibility in ICCC including Alarm Extension** |
| | 1. Monitoring of power, current, voltage, PSU, DC Fault, AC Fault, Alarm Extension to ICCC. |
| | 2. Generator controller, Fuel FM, Fuel Level Sensor, Modbus RTU Converter of data from genset controller, I/O Module, IoT Gateway, Monitoring Of Load & Load Pattern ,Operational Hours, Fuel Usage/Pattern, Coolant ,Lube oil pressure, engine temperature, Battery Status Alarm Extension to ICCC. |
| | 3. Pump performance monitoring: Specific Energy Consumption (SEC), Suction pressure, discharge pressure, flow, pump speed, and power, Pump vibration analysis, Monitoring the electrical parameters of the pump. |
| 2(b) | **Quality monitoring of drinking water supplied to the citizens at WTP Basai & Chandu on real time basis and its visibility in ICCC including Alarm Extension.** |
| | Turbidity Sensor |
| | pH sensor |
| | Total Dissolved Solids |
| | Chlorine |
| | Integration of Lab based sensors on real time basis and its visibility in ICCC. |
| 2(c) | **Equitable distribution of water** |
| | 1. Monitoring & Control distribution of water from the source to distribution point into distribution system with assessment of water requirement and its equitable distribution.<br>2. Monitoring UGT's if fully filled to their capacity.<br>3. Monitoring & Control of inflow, outflow & water level at water treatment plants and UGT's using Flow meters and Level sensors.<br>4. Monitoring of schedule adherence and duration adherence of water distribution.<br>5. Timely trigger to plant personnel in case of deviations/abnormalities.<br>6. Any other item required related to equitable distribution of water. |
| 2(d) | **Leakage detection / reduction of NRW (Nonrevenue Water) / Improvement in Billing** |
| | 1. Measuring flow variations in main & connecting pipelines.<br>2. Managing demand variations with the help of historical filling and distribution patterns.<br>3. Real time alarms and SMS notifications in case of exceptions.<br>4. Software based computational methods, Software Based alarms for unsual pressure, flow, flow balancing, Point pressure analysis, analytic tools for automatic detection of leakages.<br>5. Survey of pipeline, Detection of Direct Connections and Theft water on pipelines, Approach for limiting the water consumption by Direct connections.<br>6. Any other item required related to leakage detection / reduction of NRW/ billing. |
| 2(e) | **Network solution for Smart water including Hardware and Software for Real time monitoring, control and management over an Area (distribution Lines, Usage Points etc.) from a Water Treatment Plant including visibility of Assets.** |

| | |
|---|---|
| 2(f) | **Data Integration including GIS, other applications, integration with ICCC platform of GMDA for viewing and analyzing** |
| | CIWMS SCADA Application Software<br>• Data Acquisition Module<br>• Tag Management & Configuration Module<br>• CIWMS Administration & Management Module<br>• Visualization, Monitoring, & Controlling, Reporting Module<br>• Water Transmission Module<br>• Water Treatment Module<br>• Water Distribution Module<br>• Energy Analysis & Management<br>• GIS Integration<br>• GIS based Visibility & Control<br>• CIWMS Dashboard |
| 2(g) | **Power supply arrangement at sites. Real time monitoring of Power supply availability and failure along with Alarm extension in ICCC** |
| 2(h) | **ICCC and IoT Gateway via GPRS network & Integration of IoT Gateways with existing NMS in ICCC.** |
| | 1. SIM connectivity to ICCC/SCADA & monitoring of status of IoT Gateways on Dashboard using Onemap Gurugram (GIS Layer). |
| | 2. IoT Gateway Communication and Control of Field Devices and with ICCC (Both ways) |
| | 3. Standard Operating Procedures (SOPs) including Data security. |
| 2(i) | **1. Data on Water Flows. Real time monitoring and Alarm extension in ICCC.**<br>**2. Data of Tank and Reservoirs. Real time monitoring and Alarm extension in ICCC.**<br>**3. Sluice Valve and Actuators. Real time monitoring and Alarm extension in ICCC.** |

## Section 6

## Bill of Quantities

## Preamble

1. The Bill of quantities shall be read in conjunction with the instructions to Bidders, Conditions of contract, Technical Specifications and Drawings.

2. The quantities given in the Bill of Quantities are estimated and provisional, and are given to provide a common basis for bidding. The basis of payment will be the actual quantities of work ordered and carried out, as measured by the contractor and verified by the Engineer and valued at the rates and prices tendered in the priced Bill of Quantities, where applicable, and otherwise at such rates as the Engineer may fix within the terms of the Contract.

3. The rates and prices tendered in the priced Bill of Quantities shall, except in so far as it is otherwise provided under the Contract, include all constructional plant, labour, supervision, materials, erection, maintenance, insurance, profit, taxes and duties, together with all general risks, liabilities and obligations set out or implied in the Contract.

4. Item wise rates and prices quoted and finalized shall be valid over a period of 36 months after Award of Work.

5. A rate or price shall be entered against each item in the Bill of Quantities, whether the quantities are stated or not. The cost of Items against which the contractor has failed to enter a rate or price shall be deemed to be covered by other rates and prices entered in the Bill of Quantities.

6. The whole cost of complying with the provisions of the Contract shall be included in the items provided in the priced Bill of Quantities, and where no Items are provided the cost shall be deemed to be distributed among the rates and prices entered for the related Items of work.

7. General directions and descriptions of work and materials are not necessarily repeated or summarized in the Bill of Quantities. References to the relevant sections of the contract documentation shall be made before entering rates or prices against each item in the Bill of Quantities.

8. Errors will be corrected by the Employer for any arithmetic errors pursuant to clause 29 of the Instructions to Bidders.

9. Any items of work not provided in the contract schedule of rates if required to be executed will be paid by the 'engineer' based on market rates of that time after getting approval from the competent authority and will be binding upon the contractor.

10. The work will be carried out strictly in accordance with the Technical Specifications, Section 4 of the bid document and that will form part and parcel of this contract agreement.

11. The 'Engineer' shall be entitled to order work against any item or work shown in this contract schedule of rates hereinafter called the "Schedule" to any extent and without any limitation whatsoever as may be required in his opinion for the purpose of work irrespective of the fact the quantities are omitted altogether in the"Schedule" or shown more or less than the work ordered to be carried out.

12. In this contract schedule of rates only essential portion of items has been written, but it will deem to cover the entire items as fully described in Haryana PWD schedule rates 2021 till the date of opening of tender and will be applicable on this contract schedule of rates.

13. All the items in this contract schedule of rates 2021 subject to the foot notes givenin the Haryana PWD schedule of rates 2021 till the date of opening of tender and will be applicable on this contract schedule of rates.

14. Quantities given in the BOQ may vary at the time of execution of works done at site.

15. Unless otherwise specified all material, machinery and labour input are to be arrange by the contractor.

16. All amendments issued to the Haryana PWD schedule of rates will be applicable on the contract schedule of rates.

17. As and when contractor gives condition that arrangement of water shall be made by the department, it shall be deemed that all the charges incurred thereon shall beborne by the department and recovery on the total work done shall be made from him.

18. No claim will be entertained from the contractor in case of any mistake in description, rate or unit occurred on account of typing or comparison or over sight. If there is any mistake, the same shall be rectifiable by the 'Engineer' at any stage as per Haryana PWD schedule of rates 2021 and all the amendments received from time to time.

19. No conditional offer should be made. In case any conditions istendered, this will be considered as null and void and only the premium or discount quoted by the tenderer small be accepted. In case any tendered refused toaccept the above afterwards, his earnest money will be forfeited or the action as per conditions of Bid Security Declaration Form shall be taken.

20. Rate quoted by the contractor for each item shall be for complete job including all taxes, carriage etc. Nothing extra on any account shall be paid.

21. The payment will be made according to the actual work done by the contractor.

## BILL OF QUANTITIES

**Table A: One Time Charge for setting up of Centralized Integrated Water Management System (CIWMS) for GMDA**

| SN | Item details | Unit | Quantity | Period | Unit Price including taxes | Total price including Taxes |
|---|---|---|---|---|---|---|
| **A** | **One-time activity-Supply, Installation & Commissioning** | | | | | |
| 1 | Supply Implementation of Centralized Integrated Water Management System CIWMS Application Software including security audit as per Scope of Work and including integration of IoT gateways and field devices as per Scope of Work<br>**Refer *4.1 to 4.8 under Technical Specifications*** | Lot | 1 | | | |
| 2 | Supply & Installation of Electro Magnetic Flow Meters including fitting and accessories etc. at field locations**.**<br>***Refer 5.1.1 under Technical Specifications***. | | | | | |
| 3 | Inlet size 40mm | Nos | 5 | | | |
| 4 | Inlet size 50mm | Nos | 89 | | | |
| 5 | Inlet size 80mm | Nos | 34 | | | |
| 6 | Inlet size 100mm | Nos | 64 | | | |
| 7 | Inlet size 150mm | Nos | 17 | | | |
| 8 | Inlet size 200mm | Nos | 17 | | | |
| 9 | Inlet size 250mm | Nos | 4 | | | |
| 10 | Inlet size 300mm | Nos | 5 | | | |
| 11 | Inlet size 350mm | Nos | 1 | | | |
| 12 | Inlet size 400mm | Nos | 1 | | | |
| 13 | Outlet size 600mm | Nos | 1 | | | |
| 14 | Outlet size 900mm | Nos | 2 | | | |
| 15 | Supply & Installation of Insertion type flow meter including fitting and accessories etc. (mainlines) at WTP Basai. ***Refer 5.1.2 under Technical Specifications*** | | | | | |
| 17 | Size 400mm | Nos | 1 | | | |
| 18 | Size 1200mm | Nos | 2 | | | |

| | | | | | | |
|---|---|---|---|---|---|---|
| 19 | Size 1300mm | Nos | 1 | | | |
| 20 | Supply & Installation of Level Sensors including fitting and accessories etc. at field locations. ***Refer 5.2 under Technical Specifications***. | Nos | 251 | | | |
| 21 | Supply & Installation of Flow Control Device including fitting and accessories etc. at field locations. ***Refer 5.3 under Technical Specifications***. | | | | | |
| 22 | Inlet size 40mm | Nos | 5 | | | |
| 23 | Inlet size 50mm | Nos | 89 | | | |
| 24 | Inlet size 80mm | Nos | 34 | | | |
| 25 | Inlet size 100mm | Nos | 64 | | | |
| 26 | Inlet size 150mm | Nos | 17 | | | |
| 27 | Inlet size 200mm | Nos | 17 | | | |
| 28 | Inlet size 250mm | Nos | 4 | | | |
| 29 | Inlet size 300mm | Nos | 5 | | | |
| 30 | Inlet size 400mm | Nos | 1 | | | |
| 31 | Inlet size 600mm | Nos | 1 | | | |
| 32 | Inlet size 900mm | Nos | 2 | | | |
| 33 | Supply & Installation of Static Pressure Transmitter including fitting and accessories etc. at field locations. ***Refer 5.4 under Technical Specifications***. | Nos | 251 | | | |
| 34 | Supply & Installation of Sluice Valve and Actuators including fitting and accessories etc. (UGT Inlet) ***Refer 5.5 &5.5.1 under Technical Specifications*** | | | | | |
| 35 | Size 600 mm | Nos | 11 | | | |
| 36 | Size 900mm | Nos | 2 | | | |
| 37 | Size 1200mm | Nos | 1 | | | |
| 38 | Supply & Installation of pre-fabricated RCC /PCC Chamber as per site requirement and associated Civil work to facilitate equipment installation. | Nos | 251 | | | |
| 39 | Supply & Installation of Enclosure of suitable size including earthing etc. for housing of IoT Gateway/RTU and UPS etc. ***Refer 5.10 under Technical Specifications*** | Nos | 251 | | | |

| | | | | | | |
|---|---|---|---|---|---|---|
| 40 | Extending Commercial Power supply by laying Electrical cables from Electrical Poles (DHBVNL) to IoT Gateway/RTU | Nos | 251 | | | |
| 41 | Supply & Installation of IoT Gateway / Edge RTU including all items, fitting and accessories etc. at field locations & Integration with existing NMS in ICCC / new NMS and implement SOP's. ***Refer 5.6 under Technical Specifications***. | Nos | 251 | | | |
| 42 | Supply& Installation of SMPS ***Refer 5.7 under Technical Specifications*** | Nos | 251 | | | |
| 43 | Supply & Installation of UPS(1KVA) for providing power backup at locations. ***Refer 5.8 under Technical Specifications*** | Nos. | 251 | | | |
| 44 | Supply & installation of Surge Protector ***Refer 5.9 under Technical Specifications*** | Nos | 251 | | | |
| 45 | Supply, Installation & integration of pH Transmitter with Sensor ***Refer 5.11.1 under Technical Specifications*** | Nos | 6 | | | |
| 46 | Supply, Installation & integration of total Dissolved solids monitoring Sensor ***Refer 5.11.2 under Technical Specifications*** | Nos | 6 | | | |
| 47 | Supply, Installation & integration of Dissolved Chlorine monitoring Sensor ***Refer 5.11.3 under Technical Specifications*** | Nos | 6 | | | |
| 48 | Supply, Installation & integration of Turbidity monitoring Sensor ***Refer 5.11.4 under Technical Specifications*** | Nos | 6 | | | |
| 49 | Supply, Installation & integration of Multi-Function Meter ***Refer 5.12.7 under Technical Specifications*** | Nos | 55 | | | |
| 50 | Supply, Installation & integration of Aux Contactor, Addon, Switch, TB's, Cables ***Refer 5.12.2 under Technical Specifications*** | Nos | 3300 | | | |
| 51 | Supply, Installation & integration of CTs (3 per Feeder) ***Refer 5.12.3 under Technical Specifications*** | Nos | 165 | | | |
| 52 | Supply, Installation & integration of Misc Items (Lugs, Ferrules, Cartridges etc.) ***Refer 5.12.4 under Technical Specifications*** | Nos | 55 | | | |
| 53 | Supply, Installation & integration of PLC with enclosures ***Refer 5.12.10 under Technical Specifications*** | Nos | 8 | | | |

| | | | | | | |
|---|---|---|---|---|---|---|
| 54 | Supply, Installation & integration of Industrial HMI 10'' along with HMI software ***Refer 5.12.11 under Technical Specifications*** | Nos | 8 | | | |
| 55 | Supply, Installation of Control cables for Pump Monitoring System at WTP Basai & Chandu. ***Refer 5.14.5 under Technical Specifications*** | Lot | 1 | | | |
| 56 | Supply, Installation of Overhead Armoured Optical Fiber Cable of 12 Fiber between Chandu WTP and Basai WTP including Jointing, Termination etc. of Approx. Length-8 Kms. | Lot | 1 | | | |
| 57 | Supply and Installation of Workstations ***Refer 5.13 under Technical Specifications*** | Nos | 8 | | | |
| 58 | Any other items required to meet the end objective (Details & Justification to be submitted along with item wise cost). | Lot | 1 | | | |
| | **Total Cost (Table A)** | | | | | |
| **B** | **Annual Charges for Comprehensive Maintenance (at the end of 1st year) after issue of PAC(Go-Live)** | | | | | |
| 59 | Annual charges for Software Licences required for running up of CIWMS on GMDA Servers. | Yearly | 1 | 5 | | |
| 60 | Annual Charges for Comprehensive Maintenance for all Field equipment's and Passive items such as cables, conduit pipes, accessories, enclosure etc. at WTP Basai, WTP Chandu, Booster station and Field locations etc. (listed above **at 251 Locations)**. | Yearly | 1 | 5 | | |
| 61 | Level-2 IT Resource for ICCC, for managing CIWMS software and integration with field devices. | Monthly | 1 | 60 | | |
| | **Total Cost (Table B)** | | | | | |
| | **Grand Total Cost (Table A to B)** | | | | | |

**Note:**

1.0 At some locations where in the size of inlet pipe is different from the size of Flow meter/Flow Control Device, appropriate reducer shall be provided of standard length for which no separate payment shall be made.

a) Device Size 200 mm for 150mm, 200 & 250mm pipes.
b) Device Size 300 mm for 300mm, 350 & 400mm pipes.
c) Device Size 100 mm for 75mm, 100mm pipes.
d) Device Size 50mm for, <75mm pipes.

2.0 The tentative list of locations for installation of Flow meters/Level sensor/Flow Control Devices/Pressure Transmitters and other filed equipment etc. is enclosed as Annexure A. These locations may change as per requirements.

3.0 The Bidder shall provide unit rates of each of the quoted Equipment & Installation item etc. Unpriced detailed scheduled of unit items and quantity along with **Make and Model No.** shall be furnished along with the Technical bid. Failure to submit these details may be treated as non-compliance and may lead to rejection of the Technical bid.

4.0 The Quantities indicated above are indicative. The actual requirement shall be worked out by successful bidder in Detailed Project Report after field survey.

5.0 The Bidder shall provide optimized solution by rationalizing the pipe size of/ various fittings devices/ for ease of maintenance. The additional work required for installing the devices shall be taken into consideration.

6.0 The quantity of equipment/devices suitable for different pipe sizes shall be finalized as per optimized system design submitted by bidder.

7.0 It is envisaged that the Flow Meter & Flow Control Value etc. shall be installed near the outlet to UGT. The bidder shall coordinate to get 230V commercial power supply at site along with Necessary extension to devices/equipment, power backup arrangement etc.

8.0 The Bidder shall be required to carry out necessary modification, addition etc. in the water supply pipes etc. to enable installation of devices. The cost shall be included in the items above.

9.0 The Bidder shall integrate the Water Quality report of existing water quality monitoring sensors at WTP Basai and WTP Chandu with CIWMS system and ensure its visibility in ICCC and GMDA Smart City dashboard and GMDA App.

10.0 Network connectivity through Optical Fiber Cable (OFC),4G, etc. is to be considered by tenderer and solution offered. Cost of service & required devices/interfaces shall be worked out by tenderer.

11.0 GMDA has its own OFC Network in Gurugram & connectivity, wherever feasible shall be provided on Ethernet port. The OFC connectivity between WTP Chandu and WTP Basai shall be established by the bidder and shall be maintained during the contract period (including O&M).

12.0 The data from the **MODBUS Gateway** shall be connected to CIWMS for which necessary requirement shall be asset and provision for the same shall be made in the above price schedule.

13.0 The sizing of IT hardware & Power consumption shall be clearly brought out.

14.0 Cost for day to day Maintenance of Centralized Integrated Water Management System as per SLA for period of 5 years shall be (year wise) as per Special Conditions for Comprehensive Maintenance Contract.

15.0 The technical support/supervision of proper operations shall be responsibility of Contract Agency including provision of manpower as per clause 14 under “Contract Data to General Conditions of Contract” (Page 74).

16.0 Adequate field maintenance teams for preventive & breakdown maintenance along with required vehicles, instrumentations, tools & tackles etc. shall be clearly indicated by contractor. GMDA shall evaluate the adequacy & deficiency shall be supplemented by contractor.

17.0 Bidder shall maintain adequate spares for each of the equipment supply to ensure maintenance of CIWMS system as per SLA defined in bid document. The spares are to be maintained at Bidder’s location.

18.0 Bidder shall have storing capacity of all items to be provided along with watch and ward facility.

19.0 For item rate tenders, the bidder shall fill in item rate at its appropriate place in figures. Items for which no rate or price is entered by the bidder will not be paid for by the employer and considered as nil (refer: IPB Clause 13.2)

20.0 Unit rates and prices shall be quoted by the bidder in Indian rupees [ITB Clause 14.1].

21.0 Rate quoted by the contractor for each item shall be for complete job including all taxes, carriage etc. Nothing extra on any account shall be paid.

22.0 Item wise rates and prices quoted and finalized shall be valid over a period of 60 months after system is declared Go-Live and can be further extended for 02 (two) more years on same rates, terms and conditions on the basis of mutual consent between GMDA and the bidder.

23.0 Bids without Total cost in Figures and words shall be rejected. In case of discrepancy between words and Figures, the amount written in words shall be taken as correct.

24.0 Items for which no cost is indicated by Agency / Bidder, the same will be loaded with highest quoted price for purpose of evaluation only, however on award of work the same shall be supplied by Agency / Bidder without any cost to GMDA.

25.0 Bids without complete Price Schedule shall be rejected. Also bid submitted with an adjustable price quotation will be treated as non-responsive and will be rejected.

26.0 No payment shall be admissible for change request (CR) in the CIWMS Software during the entire duration of contract.

27.0 The payment under Manpower Supply Cost & Annual Maintenance Cost (for period of 5 years) shall be made on quarterly basis. The subscription cost shall be paid on Annual basis.

**Section 7**

**Standard Forms Letter of Acceptance and Other Forms**

**LETTER OF ACCEPTANCE**

(Letterhead paper of the Employer)

No._____ Dated_____

To

_____(Name and address of the Contractor)
_____
_____

Dear Sirs,

This is to notify you that your Bid dated_____for execution of the _____(name of the contract and identification number as given in the contract data) for the contract Price of Rupees_____amount in words and figures), as corrected and modified in accordance with the Instructions to Bidders[1] is hereby accepted.

You are hereby requested to furnish Performance Security, (and additional security for unbalanced bids in terms of ITB Clause 29.3) *[where applicable]* in the form detailed in Clause 34.1 of ITB for an amount equivalent to Rs.___within 15 days of the receipt of this letter of acceptance valid up to 28 days from the date of expiry of **Defect Liability-cum-Maintenance Period** i.e. up to_____and sign the contract, failing which action as stated in Clause 34.3 of ITB will be taken.

Yours faithfully,

Authorized Signature
Name and title of Signatory
Name of Employer
for and on behalf of Chief Executive Officer, GMDA

A) **Issue of Notice to Proceed with the Work**

**ISSUE OF NOTICE TO PROCEED WITH THE WORK**

(Letter head of the Employer)

No._____ Dated_____

To

_____ (Name and address of the Contractor)

_____

_____

Dear Sirs:

Pursuant to your furnishing the requisite Performance Security as stipulated in ITBClause 34 and signing of the Contract for the work of _____ at a bid price of Rs. _____.

You are hereby instructed to proceed with the execution of the said works in accordance with the contract documents.

Yours faithfully,

(Signature, name and title of signatory,
authorized to sign on behalf of
Employer)

B) **Standard Form of Agreement**

## STANDARD FORM: AGREEMENT

This Agreement, made the_____day of__20_____,between_____[name and address of Employer]
(hereinafter called "the Employer") of the one part, and

_____

_____

_____

[name and address of Contractor] (hereinafter called "the Contractor" of the other part).

Whereas the Employer is desirous that the Contractor execute

_____

_____

_____

_____[name and identification number of Contract] (hereinafter called "the Works") and the Employer has accepted the Bid by the Contractor for the execution and completion of such Works and the remedying of any defects therein at a cost of Rupees.....

NOW THIS AGREEMENT WITNESSETH as follows:

1. In this Agreement, words and expressions shall have the same meanings as are respectively assigned to them in the Conditions of Contract hereinafter referred to, and they shall be deemed to form and be read and construed as part of this Agreement.
2. In consideration of the payments to be made by the Employer to the Contractor as hereinafter mentioned, the Contractor hereby covenants with the Employer to execute and complete the Works and remedy any defects therein in conformity in all aspects withthe provisions of the Contract.
3. The Employer hereby covenants to pay the Contractor in consideration of the execution and completion of the Works and remedying the defects within the Contract Price or such other sum as may become payable under the provisions of the Contract at the times and in the manner prescribed by the Contract.
4. The following documents shall be deemed to form and be read and construed as part of this Agreement, viz:

   i) Letter of Acceptance;
   ii) Notice to Proceed with the works;
   iii) Contractor's Bid;

iv) Contract Data;
v) Special Conditions of Contract and General Conditions of Contract;
vi) Specifications;
vii) Drawings;
viii) Bill of Quantities; and
ix) Any other document listed in the Contract Data as forming part of the Contract.

In witness whereof, the parties thereto have caused this Agreement to be executed theday and year first before written.

The Common Seal of _____

was hereunto affixed in the presence of:

Signed, Sealed and Delivered by the said _____

_____

in the presence of:

Binding Signature of Employer _____

Binding Signature of Contractor _____

C) **Form of Unconditional Bank Guarantee from Contractor for Earnest Money,Earnest Money Declaration and Performance Bank Guarantee**

**EARNEST MONEY (BANK GUARANTEE)**

WHEREAS,_____[Name of Bidder] (hereinafter called "the Bidder") has submitted his Bid dated _____ [date] for the construction of _____[name of contract hereinafter called "the Bid"].

KNOW ALL PEOPLE by these presents that We _____

[name of Bank] of_____[name of country] having our registered office at _____(hereinafter called "the Bank") are bound unto _____[name of Employer] (hereinafter called "the Employer") in the sum of _____* for which payment well and truly be made to the said Employerthe Bank itself, his successors and assigns by these presents.

SEALED with the common seal of the said Bank this_____day of _____,20

THE CONDITIONS of this obligation are;

a. If after Bid opening the Bidder withdraws his bid during the period of Bid validityspecified in the from of tender.

**OR**

b. If the Bidder having been notified to the acceptance of his bid by the Employerduring the period of Bid validity:

i. fails or refuses to execute the Form of Agreement in accordance with theInstructions to Bidders, if required; or

ii. fails or refuses to furnish the Performance Security, in accordance with theInstructions to Bidders; or

We undertake to pay to the employer up to the above amount upon receipt of his first written demand, without the Employer having to substantiate his demand, provided that in his demand the Employer will note that the amount claimed by him is due to him owing to the occurrence of one or any of the three conditions, specifying the occurred condition or conditions.

This Guarantee will remain in force up to and including the date _____** days after the deadline for submission of Bids or as such deadline as is stated in the Instructions to Bidders or as it may be extended by the Employer, noticeof which extension(s) to the Bank is hereby waived. Any demand in respect of this guarantee should reach the Bank not later than the above date.

DATE_____ SIGNATURE_____

WITNESS_____ SEAL _____

[Signature, name and address]

* The Bidder should insert the amount of the guarantee in words and figures denominated in Indian Rupees. This figure should be the same as shown in Clause 16.1 of theInstructions to Bidders.

** 45 days after the end of the validity period of the Bid. Date should be inserted by the employer before the Bidding documents are issued.

**Earnest Money Declaration Form**
**(in case of bidder is registered as contractor with Haryana Government)**

**(refer Clause 16.4)**

(This should be on a non-judicial stamp paper of Rs.10/- and shall be attested by Magistrate/Sub-Judge/ Notary Public)

1. I hereby submit a declaration that the bid submitted by the undersigned, on behalf of the bidder, (name of the Bidder), shall not be withdrawn or modified during the periodof validity i.e. not less than 120 (one hundred twenty) days from the bid due date.

2. I, on behalf of the bidder, (Name of Bidder), also accept the fact that in case the bid is withdrawn or modified during the period of its validity or if we fail to sign the contract in case the work is awarded to us or we fail to submit a performance security before the deadline defined in clause 34.1 of the tender document, then (Name of Bidder) will be debarred for participation in the tendering process in any of the Department/Boards/Corporations etc. of the Government of Haryana for a period of Two year from the bid due date of this work.

(Signature of the Authorized Signatory)

(Official Seal)

**PERFORMANCE BANK GUARANTEE**

To

_____[name of Employer]

_____[address of Employer]

_____

WHEREAS_____[name and address of Contractor] (hereafter called "the contractor") has undertaken, in pursuance of Contract No. _____ dated_____to execute _____ [name of Contract and brief description of Works] (hereinafter called "the Contract").

AND WHEREAS it has been stipulated by you in the said Contract that the Contractor shall furnish you with a Bank Guarantee by a recognized bank for the sum specified therein as security for compliance with his obligation in accordance with the Contract;

AND WHEREAS we have agreed to give the Contractor such a Bank Guarantee:

NOW THEREFORE we hereby affirm that we are the Guarantor and responsible to you on behalf of the Contractor, up to a total of_____[amount ofguarantee]*_____(in words), such sum being payable in the types andproportions of currencies in which the Contract Price is Payable, and we undertake to pay you, upon your first written demand and without cavil or argument, any sum or sums within the limits of_____[amount of guarantee] as aforesaid without your needing to prove or to show grounds or reasons for your demand for the sum specified therein.

We hereby waive the necessity of your demanding the said debt from the contractor before presenting us with the demand.

We further agree that no change or addition to or other modification of the terms of the Contract or of the Works to be performed there under or of any of the Contract documentswhich may be made between you and the Contractor shall in any way release us from any liability under this guarantee, and we hereby waive notice of any such change, addition or modification.

This guarantee shall be valid until 28 days from the expiry of the **DefectLiability-cum-Maintenance Period**.

Signature and Seal of the guarantor_____

Name of Bank_____
Address_____
Date_____

---

* An amount shall be inserted by the Guarantor, representing the percentage the Contract Price specified in the Contract including additional security for unbalanced Bids, if any and denominated in Indian Rupees.

D) **Format for Equipment/Machinery Lease Agreement**

**EQUIPMENT/MACHINERY LEASE AGREEMENT**

The Lease Agreement (the "agreement") is made and entered on dated_____, by and between ("Lessor) and ("Lessee") (collectively referred to as the parties).

The parties agree as follows:-

1. Lessor hereby leases to Lessee the following machinery and equipment:

_____

_____

_____

2. _____ LEASE TERM: The Lessee will start on dated _____ (begin date) and will end on dated (end date).

3. LEASE PAYMENT: Lessee agrees to pay lessor as rent for the equipment/ machinery the amount of Rs._____ ("RENT") each month in advance on the first day of each month at _____

(Address for rent payment) or at any other address designated by Lessor.

4. _____LATE PAYMENT: _____If any amount under this agreement is more than _____days late, lessee agree to pay a late fees of Rs _____ per day.

5. _____SECURITY DEPOSIT: Prior to taking possession of the Equipment/ machinery, Lessee shall deposit with Lessor in trust, a security deposit of Rs. _____as security for the performance by Lessee of the terms under this agreement and for any damages caused by Lessee or Lessee's agents to the equipment/ machinery during the lease term. Lessor may use part or all of security deposit to repair any damage to Equipment/ machinery caused by Lessee or Lessee's agents. However, lessor is not just limited to security deposit amount and lessee remains liable for any balance. Lessee shall not use or apply any such security at any time in lieu of payment of rent.If lessee breaches any terms or conditions of this Agreement, Lessee shall forfeit any deposit, as permitted by law.

6. DELIVERY: Lessee shall not be responsible for all expenses and costs i) at the beginning of the Lease Term, of transporting the equipment/ machinery Lessee's premises and ii) at the end of the Lease Term, of transporting the equipment/ machinery back to Lessor's premises.

7. POSSESSION AND SURRENDER OF EQUIPMENT/ MACHINERY: Lessee shall be entitled to possession of the equipment/ machinery on the first day of Lease Term. At the expiration of the lease term, Lessee shall surrender the equipment/ machinery to Lessor by delivering the equipment/ machinery to Lessor or Lessor agents in good condition and working order, ordinary wear and tear excepted, as it was at the commencement of the agreement.

8. USE OF EQUIPMENT/ MACHINERY: Lessee shall only use the equipment/ machinery in a careful and proper manner and will comply with all laws, rules, ordinances, statues and orders regarding the use, maintenance of storage of the equipment/ machinery.

9. CONDITIONS OF EQUIPMENT/ MACHINERY AND REPAIR: Lessee or Lessee's agent has inspected the equipment/ machinery and acknowledges that the equipment/ machinery is in good and acceptable condition.

10. MAINTENANCE, DAMAGE AND LOSS:- Lessee will, at Lessee's sole expense, keep and maintain the equipment/ machinery clean and in good working order and repair during the Lessee Term. In the event the equipment/ machinery is lost or damaged beyond repair, Lessee shall pay to Lessor the replacement cost of equipment/ machinery, in addition, the obligations of this Agreement shall continue in full force and effect through the Lease term.

11. INSURANCE: Lessee shall be responsible to maintain insurance on the equipment/ machinery with losses payable to Lessor against fire, theft, collision and other such risks as are appropriate and specified by Lessor, upon request by Lessor, Lessee shall provide proof of such insurance.

12. OWNERSHIP: The equipment/ machinery is and shall remain the exclusive property of Lessor.

13. BINDING EFFECT: The covenants and conditions contained in the Agreements shall apply to and bind the Parties and the heirs, legal representatives, successors and permitted assigns of the Parties.

14. GOVERNING LAW: This agreement shall be governed and constructed in accordance with the Laws of State of Haryana.

15. NOTICE: Any notice required or otherwise given pursuant to this Agreement shall be in writing and mailed certified return receipt requested, postage prepaid, or delivered by courier or speed post to Lessor/ Lessee

| Address of the Lessor | Address of the Lessee |
| --- | --- |
| | |

Either party may change such address from time to time by providing notice as set forthe above.

In witness whereof, the parties have caused this Agreement to be executed the dayand year first above written.

LESSOR

_____

_____

LESSEE

_____

_____

**F) Format For Joint Venture Memorandum of Understanding/Agreement (whereverapplicable)**

**FORMAT FOR JOINT VENTURE MEMORANDUM OFUNDERSTANDING/AGREEMENT**

THIS JOINT VENTURE MEMORANDUM OF UNDERSTANDING (MOU)/AGREEMENT EXECUTED AT …… ON THIS DAY OF …….. 2021 BETWEEN M/s Registered office at_____as the first party and M/s _____Registered office at _____as the Second party _____as thirty party. (The expression and words of the first andsecond and third party shall mean and include their heirs' successors, assigns, nominees execution, administrators and legal representatives respectively.)

WHEREAS the parties herein above mentioned are desirous of entering into a JointVenture for carrying on Engineering and/or contract works, in connection with _____and other works mentioned in Tender Notice No. _____ Dated_____of PWD B&R Department or any other work or works, as mutually decided between the parties to this Joint Venture.

WHEREAS all the parties are desirous of recording the terms and conditions of thisJoint Venture to avoid future disputes.

NOW THIS MoU/AGREEMENT WITNESSTH AS UNDER:

1. That in and under this Joint Venture agreement the work will be done jointly by the First Party and Second Party in the name and style of M/s _____M/s_____ and M/s._____ _____).

2. This all the parties shall be legally liable, severally and or jointly responsible for the satisfactory/successful execution/completion of the work in all respects and in accordance with terms and conditions of the contract.

3. That the role of each constituent of the said Joint Venture in details shall be as under:-

The first party shall be responsible for _____

The second party shall be responsible for _____

The third party shall be responsible for _____

4. The share of profit and loss of each constituent of the said Joint venture shall be as under:-

5. That all the parties of this Joint Venture shall depute their experienced staff as committed commensuration with their role and responsibility and as required for the successful completion of the works in close consultation with each other.

6. That the investment required for the works under this Joint Venture shall be brought in by the parties as agreed to between them from time to time.

7. That all the Bank guarantee shall be furnished jointly by the parties in the name of Joint Venture.

8. That the party number_____to thisJoint Venture shall be the prime (lead) contractor and will be responsible for timely completion of work and to coordinate with the Department to receive payments and also to make all correspondence on behalf of this Consortium/Joint Venture.

9. That all the above noted parties i.e.__not tomake any change in the agreement without prior written consent of the competent authority of the department.

NOW THE PARTIES HAVE JOINED HANDS TO FORM THIS JOINT VENTURE ON THIS _____DAY OF _____TWO THOUSAND WITH REFERENCE TO ANDIN CONFIRMATION OF THEIR DISCUSSIONS AND UNDERSTANDING BROUGHT ON RECORD ON _____.

IN WITNESS THEREOF ALL/BOTH THE ABOVE NAMED PARTIES HAVE SET THEIR RESPECTIVE HANDS ON THIS JOINT VENTURE AGREEMENT ON THE DAY, MONTHAND YEAR FIRST ABOVE MENTIONED IN THE PRESENCE OF THE FOLLOWING WITNESS;

WITNESSES:

1. FIRST PARTY
2. SECOND PARTY

**G) Bank Guarantee for Advance Payment**

**BANK GUARANTEE FOR ADVANCE PAYMENT**

To

_____ [name of Employer]
_____[address of Employer]
_____[name of Contractor]

Gentlemen:

In accordance with the provisions of the Conditions of Contract, sub-clause 51.1("Advance Payment") of the above-mentioned Contract,_____[name and address of Contractor] (hereinafter called "the Contractor") shall deposit with_____[name of Employer] a bank guarantee to guarantee his proper and faithful performance under the said Clause of theContract in an amount of____ _____[amount of Guarantee] * _____[in words].

We, the_____[bank of financial institution], as instructed by the Contractor, agree unconditionally and irrevocably to guarantee as primary obligator and notas Surety merely, the payment to_____[name of Employer] on his first demand without whatsoever right of obligation on our part and withouthis first claim to the Contractor, in the amount not exceeding _____ [amount of guarantee]*_____[in words].

We further agree that no change or addition to or other modification of terms of the Contractor or Works to be performed thereunder or of any of the Contract documents whichmay be made between____[name of Employer] and the Contractor,shall in any way release us from any liability under this guarantee, and we hereby waive notice of any such change, addition or modification.

This guarantee shall remain valid and in full effect from the date of the advance payment under the Contract until_____[name of Employer] receives full repayment of the same amount from the Contractor.

Yours truly,

Signature and Seal of the guarantor
Name of Bank_____ Address_____
Date_____

* An amount shall be inserted by the Bank or Financial Institution representing theamount of the Advance Payment, and denominated in Indian Rupees.

**H) Indenture For Secured Advances**

**INDENTURE FOR SECURED ADVANCESFORM 31**

(for use in cases in which the contract is for finished work and the contractor has entered intoan agreement for the execution of a certain specified quantity of work in a given time).

This indenture made the_____day of_____, 20____ BETWEEN_____(hereinafter called the contractor which expression shall where the context so admits or implies be deemed to include his executors, administrators and assigns) or the one part and the Employer of the other part.

Whereas by an agreement dated_____(hereinafter called the said agreement) the contractor has agreed.

AND WHEREAS the contractor has applied to the Employer that he may be allowed advanced on the security of materials absolutely belonging to him and brought by him to the site of the works the subject of the said agreement for use in the constructions of such of the works as he has undertaken to executive at rates fixed for the finished work (inclusive of the cost of materials and labour and other charges).

AND WHEREAS the Employer has agreed to advance to the Contractor the sum of Rupees_____on the security of materials the quantities and other particulars of which are detailed in Accounts of Secured Advances attached to the Running Account bill for the said works signed by the Contractor on____and the Employer has reserved to himself the option of making any further advance or advances on the security of other materials brought by the Contractor to the site ofthe said works.

Now THIS INDENTURE WITNESSETH that in pursuance of the said agreement andin consideration of the sum of Rupees_____on or before the execution of these presents paid to the Contractor by the Employer (the receipt where of the Contractor doth hereby acknowledge) and of such further advances (if any) as may be made to him as a for said the Contractor doth hereby covenant and agree with the President and declare as follows:

(1) That the said sum of Rupees_____so advanced by the Employer to the Contractor as aforesaid and all or any further sum of sums advanced as aforesaid shall be employed by the Contractor in or towards expending the execution of the said works and for no other purpose whatsoever.

(2) That the materials details in the said Account of Secured Advances which have been offered to an accepted by the Employer as security are absolutely the Contractor's own propriety and free from encumbrances of any kind and the contractor will not make any application for or receive a further advance on the security of materials which are not absolutely his own property and free from encumbrances of any kind and the Contractor indemnified the Employer against all claims to any materials in respect of which an advance has be made to him as aforesaid.

(3) That the materials detailed in the said account of Secured Advances and all other materials on the security of which any further advance or advances may hereafter be made as aforesaid (hereafter called the said materials) shall be used by the Contractor solely in the execution of the said works in accordance with the directions of the 'Engineer'.

(4) That the Contractor shall make at his own cost all necessary and adequate arrangements for the proper watch, safe custody and protection against all risks of the said materials and that until used in

construction as aforesaid the said materialsshall remain at the site of the said works in the Contractor's custody and on his own responsibility and shall at all times be open to inspection by the 'Engineer' or any officer authorized by him. In the event of the said materials or any part thereof being stolen, destroyed or damaged or becoming deteriorated in a greater degree than is due to reasonable use and wear thereof the Contractor will forthwith replace the same with other materials of like quality or repair and make good the same required by the 'Engineer'.

(5) That the said materials shall not be any account be removed from the site of the said works except with the written permission of the 'Engineer' or an officer authorized by him on that behalf.

(6) That the advances shall be repayable in full when or before the Contractor receives payment from the Employer of the price payable to him for the said works under the terms and provisions of the said agreement. Provided that if any intermediate payments are made to the Contractor on account of work done than on the occasion of each such payment the Employer will be at liberty to make a recovery from the Contractor's bill for such payment by deducting there from the value of the said materials than actually used in the construction and in respect of which recovery has not been made previously, the value for this purpose being determined in respect of each description of materials at the rates at which the amounts of the advances made under these presents were calculated.

(7) That if the Contractor shall at any time make any default in the performance orobservance in any respect of any of the terms and provisions of the said agreementor of these presents the total amount of the advance or advances that may still beowing of the Employer shall immediately on the happening of such default be re- payable by the Contractor to be the Employer together with interest thereon attwelve per cent per annum from the date or respective dates of such advance oradvances to the date of repayment and with all costs, charges, damages andexpenses incurred by the **Employer** in or for the recovery thereof or theenforcement of this security or otherwise by reason of the default of theContractor and the Contractor hereby covenants and agrees with the **Employer** toreply and pay the same respectively to him accordingly.

(8) That the Contractor hereby charges all the said materials with the repayment to the Employer of the said sum of Rupees _____ and any further sum of sums advanced as aforesaid and all costs, charges, damages and expenses payable under these presents PROVIDED ALWAYS and it is hereby agreed and declared that notwithstanding anything in the said agreement and with- out prejudice to the power contained therein if and whenever the covenant for payment and repayment here-in-before contained shall become enforceable and the money owing shall not be paid in accordance there with the **Employer** may at any time thereafter adopt all or any of the following courses as he may deem best :

(a) Seize and utilize the said materials or any part thereof in the completion of the said works on behalf of the contractor in accordance with the provisions in that behalf contained in the said agreement debiting the contractor with the actual cost of effecting such completion and the amount due to the contractor with the value of work done as if he had carried it out in accordance with the said agreement and at the rates thereby provided. If the balance is against the contractor, he is to pay same to the **Employer** on demand.

(b) Remove and sell by public auction the seized materials or any part there of and out of the moneys arising from the sale retain all the sums aforesaid repayable or payable to the **Employer** under these presents and pay over the surplus (if any) to the Contractor.

(c) Deduct all or any part of the moneys owing out of the security deposit or any sum due to the Contractor under the said agreement.

(9) That except in the event of such default on the part of the contractor as aforesaid interest on the said advance shall not be payable.

(10) That in the event of any conflict between the provisions of these presents and the said agreement the provisions of these presents shall prevails and in the event of any dispute or difference arising over the construction or effect of these presents the settlement of which has not been here-in-before expressly

provided for the same shall be referred to the Employer whose decision shall be final and the provision of the Indian Arbitration Act for the time being in force shall apply to any such reference.

**I) Integrity Pact Format**

**INTEGRITY PACT FORMAT**

(To be executed on plain paper and submitted alongwith Technical Bid/Tender documents for tenders having a value of Rs 1 cr. or above. To be signed by the bidder and same signatory competent/ authorized to sign the relevant contract on behalf of the State)

This integrity Pact is made at_____on this_____day of_____2021.

BETWEEN

Engineer-in-Chief on the behalf of Cheif Executive Officer, GMDA, Gurugram through its Superintending Engineer or Executive Engineer "Employer" through which expression shall, unless repugnant to the context or meaning thereof, include its administrators, successors and assigns)

AND

{*Name and address of the Firm/Company*}, (hereinafter referred to as "The Bidder(s)/Contractor(s) /Concessionaire (s)/Consultant(s) and which expression shall unless repugnant to be meaning or context thereof include its successors and permitted assigns.)

**Preamble**

Whereas, the Employer has floated the Tender (NIT No..... dtd..... } (hereinafter referred 'to as "Tender/Bid") and intends to award, under laid down organizational procedure, contract/s for {Name of the work}(hereinafter referred to as the "Contract").

And Whereas the Employer values full compliance with all relevant laws of the land, rules of land, regulations, economic use of resources and of fairness/ transparency in its relations with its Bidder(s) and/ or Contractor(s)/Concessionaire (s)/Consultant(s).

And whereas to meet the purpose aforesaid, both the parties have agreed to enter into this Integrity Pact (hereafter referred to as "Integrity Pact" or "Pact") the terms and conditions of which shall also be read as integral part and parcel of the Tender documents and contract between the parties.

Now, therefore, in consideration of mutual covenants contained in this pact, the parties hereby agree as follows and this pact witnesses as under:

**Article-1: Commitments of the Employer**

(1) The Employer commits itself to take all measures necessary to prevent corruption and to observe the following principles:-

a) No employee of the Employer, personally or through family members, will in connection with the Tender for, or the execution of a Contract, demand, take a promise for or accept, for self, or third person, any material of immaterial benefit which the person is not legally entitled to.

b) The Employer will, during the Tender process treat all Bidder(s) with equity and reason. The Employer will in particular, before and during the Tender process, provide to all Bidder(s) the same information and will not provide to any Bidder(s) confidential/ additional information through which the Bidder(s) could obtain an advantage in relation to the tender process or the contract execution.

c) The Employer will exclude all known prejudiced persons from the process, whose conduct in the past has been of biased nature.

(2) If the Employer obtains information on the conduct of any of its employees which is a criminal offence under the IPC/PC Act or any other Statutory Acts or if there be a substantive suspicion in this regard, the Employer will inform the Chief Vigilance Officer and in addition can initiate disciplinary actions asper its internal laid down Rules/Regulations.

**Article-2: Commitments of the Bidder(s) / Contractor(s) / Concessionaires) /Consultant(s)**

The Bidder(s)/ Contractor(s)/Concessionaire (s)/Consultant(s) commit himselfto take all measures necessary to prevent corruption. He commits himself to observe the following principles during his participation in the tender process and during the contract execution.

a) The Bidder(s)/Contractor(s) /Concessionaire (s)/Consultant(s) will not, directly or through any other person or firm, offer, promise or give to any of the Employer's employees involved in the tender process or the execution of the contract or to any third person any material or other benefit which lie/she is not legally entitled to, in order to obtain in exchange any advantage of any kind whatsoever during the tender process or during the execution of the contract.

b) The Bidder(s)/Contractor(s) /Concessionaire (s)/Consultant(s) will not enter with other Bidders into any undisclosed agreement or understanding, whether formal or informal. This applies in particular to prices, specifications, certifications, subsidiary contract, submission or non submission or bids or any other actions to restrict competitiveness or tointroduce cartelization in the bidding process.

c) The Bidder(s) / Contractor(s) / Concessionaire(s) / Consultant(s) will not commit any offence under the relevant IPC/PC Act and other Statutory Acts; further the Bidder(s) / Contractor(s) / Concessionaire(s) / Consultant(s) will not use improperly, for purposes of completion or personal gain, or pass on to others, any information or document provided by the Principal as paid of the business relationship, regarding plans, technical proposals and business details, including information contained or transmitted electronically.

d) The Bidder(s) / Contractor(s) / Concessionaire(s) / Consultant(s) will, when presenting his bid, disclose any and all payments he has made, is committed to or intends to make to agents, brokers or any other intermediaries in connection with the award of the contract. He shall also disclose the details of services agreed upon for such payments.

e) The Bidder(s) / Contractor(s) / Concessionaire(s) / Consultant(s) will not instigate third persons to commit offences outlined above or be an accessory tosuch offences.

f) The Bidder(s) / Contractor(s) / Concessionaire(s) / Consultant(s) will not bring any outside influence through any Govt. bodies/quarters directly or indirectly on the bidding process in furtherance of his bid.

**Article-3 Disqualification from tender process and exclusion from futurecontracts.**

1. If the Bidder(s) / Contractor(s) / Concessionaire(s) / Consultant(s) before award or during execution has committed a transgression through a violation of any provision of Article- 2, above or in any other form suchas to put his reliability or credibility in question, the Employer is entitled to disqualify the Bidder(s)/ Contractor(s)/Concessionaire (s)/Consultant(s) from the tender process.

**2.** If the Bidder(s) / Contractor(s) / Concessionaire(s) / Consultant(s) has committed a transgression through a violation of Article-2 such as to put his reliability or credibility into question, the Employer shall be entitled to exclude including blacklist and put on holiday the Bidder(s)/Contractor(s)/Concessionaire (s)/Consultant(s) for any future tenders/ contract award process. The imposition and duration of the exclusion will be determined by the severity of the transgression. The severity will be determined by the Employer taking into consideration the full facts and circumstances of each case particularly taking into account the number of transgressions, the position of the transgressors within the company hierarchy of the Bidder(s) / Contractor(s) /Concessionaire(s) / Consultant(s) and the amount of the damage. The exclusion will be imposed for a maximum of 3 years.

3. A transgression is considered to have occurred if the Employer after due consideration of the available evidence concludes that "On the basis of facts available there are no material doubts".

4. The Bidder(s) / Contractor(s) / Concessionaire(s) / Consultant(s) with its free consent and without any influence agrees and undertakes to respect and uphold the Employer absolute rights to resort to and impose such exclusion and further accepts and undertakes not to challenge or question such exclusion on any ground, including the lack of any hearing before the decision to resort to such exclusion is taken. This undertaking is given freely and after obtaining independent legal advice.

5. The decision of the Employer to the effect that a breach of the provisions of this Integrity Pact has been committed by the Bidder(s) / Contractor(s) shall be final and binding on the Bidder(s) / Contractor(s)/Concessionaire(s)/ Consultant(s) however, the Bidder(s) / Contractor(s) / Concessionaire(s) / Consultant(s) can approach IEM(s) appointed for the purpose of this Pact.

6. On occurrence of any sanctions/ disqualification etc arising out from violation of integrity pact, the Bidder(s)/Contractor(s)/Concessionaire (s)/Consultant(s) shall not be entitled for any compensation on this account.

7. Subject to full satisfaction of the Employer, the exclusion of the Bidder(s)/ Contractor(s) /Concessionaire (s)/Consultant(s) could be revoked by the Principal if the Bidder(s)/ Contractor(s)/Concessionaire (s)/Consultant(s) can prove that he has restored/recouped the damage caused by him and has installed a suitable corruption prevention system in his organization.

**Article-4: Compensation for Damages.**

1. If the Employer has disqualified the Bidder(s) from the tender process prior to the award according to Article-o, the Employer shall be entitled to forfeit the Earnest Money Deposit/ Bid Security or demand and recover the damages equivalent to Earnest Money Deposit/ Bid Security apart from any other legal right that may have accrued to the Employer.

2. In addition to I above, the Employer shall be entitled to take recourseto the relevant provisions of the contract related to Termination of Contract due to Contractor Default. In such case, the Employer shall be entitled to forfeit the Performance Bank Guarantee of the Contractor demand and recover liquidated and all damages as per the provisions of the contract/concession agreement against Termination.

**Article-5: Previous Transgressions**

1. The Bidder declares that no previous transgressions occurred in the last 3 years immediately before signing of this Integrity Pact with any other Company in any country conforming to the anti corruption/ Transparency International (TI) approach or with any other Public Sector Enterprise/ Undertaking in India or any Government Department in India that could justify his exclusion from the tender process.

2. If the Bidder makes incorrect statement on this subject, lie can be disqualified from the tender process oi action for his exclusion can be taken as mentioned under Article-3 above for transgressions of Article-2 andshall be liable for compensation for damages as per Article-4 above.

**Article-6: Equal treatment of all Bidders/Contractors//Concessionaire (s)/Consultant(s)/Subcontractors.**

1. The Bidder(s)/Contractor(s)/Concessionaire (s)/Consultant(s) undertake(s) to demand from all sub-contractors a commitment in conformity with this Integrity Pact, and to submit it to the Employer before contract signing.

2. The Employer will enter into agreements with identical conditions as this one with all Bidders/Contractors//Concessionaire (s)/Consultant(s) and Subcontractors

3. The Employer will disqualify from the tender process all Bidders who do not sign this Pact or violate its provisions.

**Article-7: Criminal charges against violating Bidder(s)/ Contractor(s)/Concessionaire (s)/Consultant(s)/ Sub-contractor(s).**

If the Employer obtains knowledge of conduct of a Bidder/Contractor/Concessionaire/ Consultant or subcontractor, or of an employee or a representative or an associate of a Bidder/Contractor or Subcontractor, which constitutes corruption, or if the Employer has substantive suspicion in this regard, the Employer will inform the same to the Chief Vigilance Officer.

**Article-8: Independent External Monitor (IEM)**

1. The Employer has appointed a Independent External Monitor (herein after referred to as "Monitor") for this Pact. The task of the Monitor is to review independently and objectively, whether and to what extent the parties comply with the obligations under this agreement.

2. The Monitor is not subject to instructions by the representatives of the parties and performs his functions neutrally and independently. He reports to the Engineer – In – Chief (Roads/Buildings).

3. The Bidder(s)/Contractor(s)/Concessionaire (s)/Consultant(s) accepts that the Monitor has the right to access without restriction to all project documentation of the Employer including that provided by the Bidder(s)/ Contractor(s)/Concessionaire(s)/Consultant(s).

The Bidder(s)/Contactor(s)/Concessionaire (s)/Consultant(s) will also grant the Monitor, upon his request and demonstration of a valid interest, unrestricted and unconditional access to his project documentation. The same is applicable to Subcontractors. The Monitor is under contractual obligation to treat the information and documents of the Bidder(s)/Contractor(s)/ Subcontractor(s) with confidentiality.

4. The Employer will provide to the Monitor sufficient information about all meetings among the parties related to the Project provided such meetings could have an impact on the contractual relations between the Principal and the Contractor. The parties offer to the Monitor the option to participate in such meetings.

5. As soon as the monitor notices, or has reason to believe, a violation of this Pact, lie will so inform the Management of the Employer and request the Management to discontinue or take corrective action, or to take other relevant action. The monitor can in this regard submit non-binding recommendations. Beyond this, the monitor has no right to demand from the parties that they act in a specific manner, refrain from action or tolerate action.

6. The Monitor will submit a written report to the Engineer – In – Chief (Roads/Buildings) within 8 to 10 weeks from the date of reference or intimation to him by the Employer and, should the occasion arise, submit proposals for correcting problematic situations.

7. If the Monitor has reported to the Engineer – In – Chief (Roads/Buildings), a substantiated suspicion of an offence under relevant IPC/PC Act, and the Engineer – In – Chief (Roads/Buildings) has not, within the reasonable time taken visible action to proceed against such offence or reported it to the Chief Vigilance Officer, the Monitor may also transmit this information directly to the Chief Vigilance Officer.

8. The word 'Monitor" would include both singular and plural.

**Article — 9 Pact Duration**

This Pact begins when both parties have 1egally signed it. It expires 12 months after the Defect Liability period is over or 12 months after his last payment under the contract whichever is later and for all other unsuccessful Bidders 06 months after this Contract has been awarded. If any claim is made/ lodged during his time, the same shall be binding and continue to be valid despite the lapse of this pact as specified above, unless it is discharged/ determined by the Engineer – In – Chief (Roads/Buildings).

**Article - 10 Other Provisions.**

1. This pact is subject to Indian Law. Place of performance and jurisdiction is the Registered Office of the Employer

2. Changes and supplements as well as termination notices need to be made in writing.

3. If the Bidder/Contractor/Concessionaire(s)/Consultant(s) is a partnership or a consortium, this pact must be signed by all partners or consortium members.

4. Should one or several provisions of this agreement turn out to be invalid, the remainder of this agreement remains valid. In this case, the parties will strive to come to an agreement to their original intentions.

5. Any disputes/ differences arising between the parties with regard to term of this pact, any action taken by the Employer in accordance with this Pactor interpretation thereof shall not be subject to any Arbitration.

6. The actions stipulated in this Integrity Pact are without prejudice to any other legal action that may follow in accordance with the provision of the extent law in force relating to any civil or criminal proceedings.

In witness whereof the parties have signed and executed this Pact at the place and datefirst done mentioned in the presence of following witness:-

(For & On behalf of the Employer)

(For & On behalf of the Bidder/ Contractor Concessionaire (s)/Consultant(s)/)

(Office Seal)

Place Date

Witness I: (Name & Address):

Witness 2: (Name & Address):

**J) Undertaking**

**UNDERTAKING**

Description of the Works:

_____

_____

_____

To :

Address :

1. With full understanding that Part II of our bid (Financial bid) will be opened only if I/We qualify on the basis of evaluation in Part I of the Bid (Technical bid), I/We offer to execute the Works described above and remedy any defects therein in conformity with the conditions of Contract, specifications, drawings, Bill of Quantities and Addenda for an amount quoted in the Financial Bid.
2. I/We agree to abide by this Bid for the period of 120 days from the date fixed for receiving the same, and it shall remain binding upon us and may be accepted at any time before the expiration of that period.
3. Unless and until a formal Agreement is prepared and executed this Bid, together with your written acceptance thereof, shall constitute a binding contract between us.
4. I/We undertake, if our Bid is accepted, to commence the Works as soon as is reasonably possible after the receipt of the Engineer's notice to commence, and to complete the whole of the Works comprised in the Contract within the time stated in the document.
5. I/We understand that you are not bound to accept the lowest or any tender you may receive.

Signature of Authorised Signatory .....
Name and Title of Signatory.....
Name of Bidder .....
Authorised Address of Communication.....
Telephone Nos (Office) ……
Mobile No. ……
Facsimile (Fax) No. …….
Electronic Mail Identification (Email ID) ……
**Place: ……**
**Date: ……**

**K) AFFIDAVIT**

**FORMAT FOR THE AFFIDAVIT**

(NOTE: This affidavit should be on a non-judicial stamp paper of Rs.10/- and shall beattested by Magistrate/Sub-Judge/ Notary Public)

**Name of work** _____

_____

I, ……..…(name of the authorized representative of the bidder) son/daughter of resident of……. (full address),aforesaid solemnly affirm and state as under:

a. I, undersigned, do hereby certify that all the information furnished and statements made in response to this notice inviting bid are true and correct and nothing has been concealed.

b. I, undersigned or our firm M/s_have never been blacklisted or debarred by any State Govt. /Central Government/Autonomous Body/Authority in Law.

c. I, undersigned or our firm M/s__have never been declaredbankrupt/ insolvent as on date.

d. The undersigned hereby authorize(s) and request(s) any bank, person, firm PSU/ Authority or Corporation to furnish pertinent information deemed necessary and requested by the Department to verify this statement or regarding may (our) competence and general reputation.

e. The undersigned understand and agrees that further qualifying information may be requested, and agrees to furnish any such information at the request of the Department/ Project implementing agency.

f. I, the undersigned do hereby undertake that our firm M/s _____would invest a minimum cash upto 25% of the value of thework during implementation of the Contract.

g. I, the undersigned do hereby undertake that our firm M/s_____agreeto abide by this bid for a period of 120 days from the date fixed for receiving the same and it shall be binding on us and may be accepted at any time before the expiration of that period.

h. I, the undersigned do hereby undertake that our firm M/s_____agreeto deploy on this work the machinery and equipment as mentioned in ITB and technical personnels as mentioned in Contract Data of the bid document.

i. *I hereby certify that I have been authorised by …… ……..……..…… (the bidder) to sign on theirbehalf, the bid mentioned in paragraph 1 above.

Place: ……..
Date: ……

Deponent Signed by an Authorized
Officer of the firm (Deponent)

*not applicable if the bidder is an individual and is signing the bid on his own behalf.

**Manufacturers Authorization Form (MAF)**

(This form has to be provided by the OEMs of the products proposed)

Date:

To,
Chief Executive Officer
Gurugram Metropolitan Development Authority
Plot No. 3,Sec-44,Gurugram

Bid Ref: <>

Dear Sir,

We……, (name and address of the manufacturer) who are established and reputed manufacturers of …… (name of the products) for ……. years of presence in India and having product development centres at …… (address of manufacturing / development locations) do hereby authorize M/s …… (name and address of the bidder) to offer their quotation, negotiate and conclude the contract with you against the above mentioned tender for the following equipment / software manufactured / developed by us –
1. ……
2. ……
3. ……

We hereby extend our full guarantee and warranty as per the terms and conditions of the tender and the contract for the equipment and services offered against this invitation for the tender offer by the above firm. In case of M/s …… (name and address of the bidder) is out of service due to any reason, we will make an alternate arrangement for the service and maintenance of our product on the same terms and conditions.

Yours faithfully,

(Name of the authorized signatory, Designation, Contact number & Address)

Note:
1. This letter of authority should be on the letterhead of the OEM and should be signed by an authorized person having the power of attorney from the OEM.
2. OEMs need to give compliance on functional & technical specifications mentioned in the Bid document of their proposed products and solutions on the letterhead duly signed by an authorized person having the power of attorney from the OEM.

**SECTION – 8**

**Drawings & List of Locations**

***Water Supply Map line-1300MM***

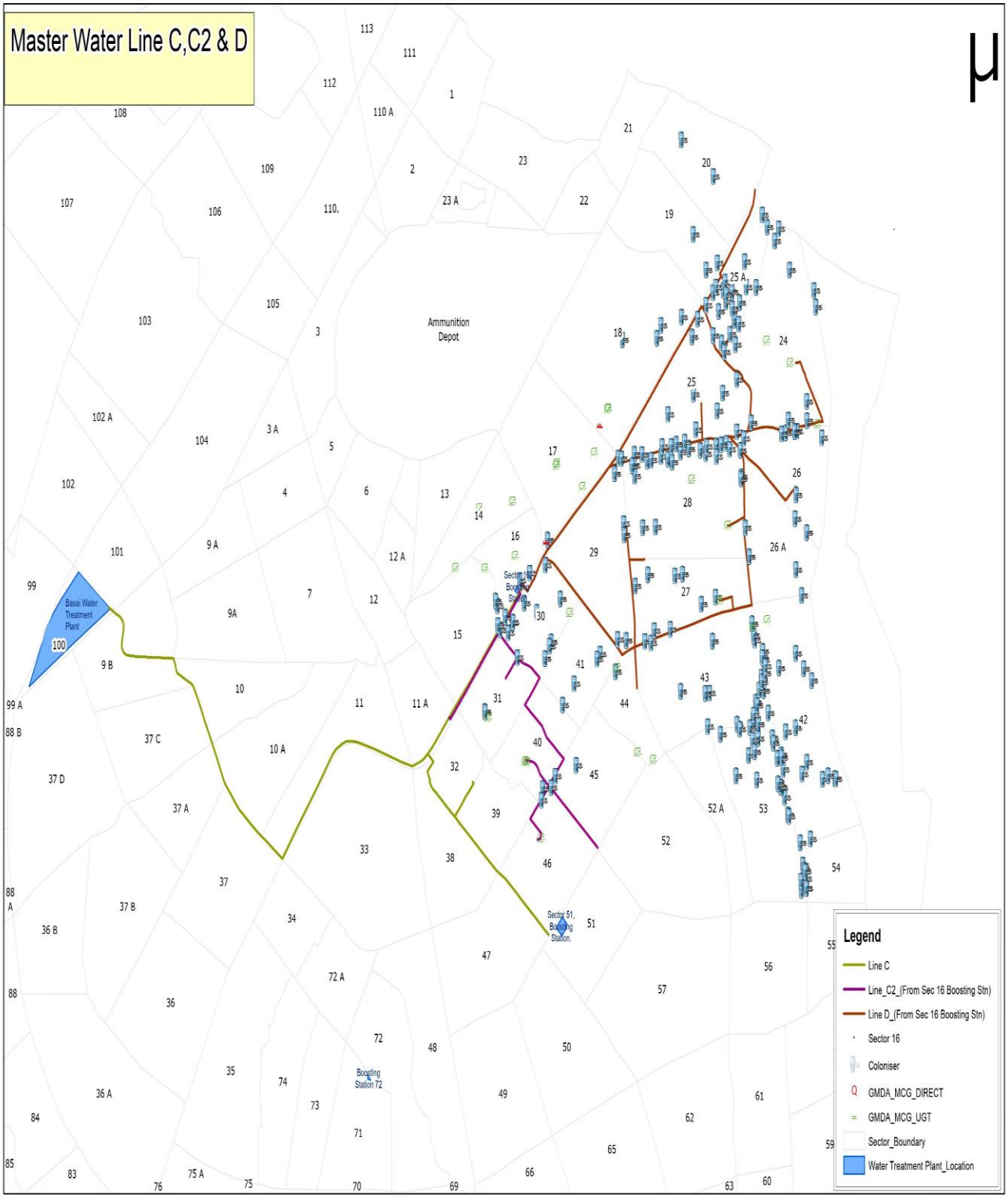

**Annexure-'A'**

**Tentative list of locations for installation of Flow meters/ Level sensors/Flow Control Devices & Other Field equipment on 1300 MM Line.**

| S.No | Address | Inlet_Size |
|---|---|---|
| 1. | M/s govt employees cooperative 2nd block C/om/S Raheja Sec-31 | 80 |
| 2. | M/s Govt Employer cooperative sec-31&32A Gurugram. | 80 |
| 3. | M/s Delhi buildwell pvt Ltd, park centra, sec-30 gurugram | 80 |
| 4. | M/s dlf center limited star tower sec-30 gurugram | 100 |
| 5. | M/s dlf commercial building sec-30 gurugram | 75 |
| 6. | M/s world spa apartments owners association sec-30/41 gurugram | 50 |
| 7. | M/s Unitech Ltd. (world spa east), sec-30/41 gurugram | 100 |
| 8. | M/S dlf India Ltd. building block A1, A2 sec-30, gurugram | 80 |
| 9. | M/s AFNH JALVAYU VIHAR APARTMENTS GH-1 SEC-30 Gurugram | 200 |
| 10. | M/s Cyber park Unitech city sector-39, Gurugram | 80 |
| 11. | m/s the general manager, Unitech Ltd, Greenwood city sec-45, gurugram | 50 |
| 12. | M/s residential plotted colony, A block Greenwood city sec-45&46 Gurgaon. | 50 |
| 13. | M/s Pioneer urban land and infrastructure limited. Club building Greenwood city sec-46 | 50 |
| 14. | M/s Unitech Ltd, Sec-45, Gurgaon | 50 |
| 15. | Water works, sector 14, Gurugram | 350 |
| 16. | M/s Dy Manager South City-1, Unitech, Block-L Sec-30/41, Gurgaon | 150 |
| 17. | M/s dy general manager, south city-1, B Block, Gurgaon, sec -30/41 | 150 |
| 18. | M/s Dy Gen. Unitech limited, Real Estate, Div.UT House, Signature Towers, Sec-30 Gurugram | 50 |
| 19. | M/s Delhi Metro Rail Corporation ltd, Huda City Centre, sec-29 Gurugram | 50 |
| 20. | M/s Delhi Metro Rail corporation Ltd, Iffco Chowk Metro Station, Sector-29, Gurugram | 50 |
| 21. | M/s Delhi Metro Rail corporation ltd, MG Road metro station, gurugram | 50 |
| 22. | M/s Delhi Metro Rail corporation ltd, Sikanderpur metro station, gurugram | 50 |
| 23. | M/s Delhi metro rail corporation ltd, Guru Dronacharya Metro Station, Gurugram | 50 |
| 24. | M/s Dy GM Unitech South City, Part-1, F Block, Gurugram, sec -41 | 150 |
| 25. | M/s GM South City-1, GH Pocket B, The Palms, Sector-41, Gurugram | 100 |
| 26. | M/s Galaxy Hotel pvt ltd Sec-15, part-2 Gurgaon | 80 |
| 27. | M/s JMD Regent Square, Pacific square commercial complex, Sec-15 part-2 Gurugram | 50 |
| 28. | M/S commercial colony signature tower -ii, sector 15 part 2 | 50 |
| 29. | m/s International Recreation and Amusement ltd, Sec-29 Gurugram (apply ghar) | 100 |
| 30. | m/s paras health care pvt ltd sec -43 | 100 |
| 31. | m/s dlf commercial building block-2 phase -v, zone-6 , sec-43 | 50 |
| 32. | m/s dlf limited stp , zone -vi, phase- v , sec -43 | 50 |
| 33. | m/s westend height estate 3, block - 13,14,15 group housing, dlf city, phase - v , sec -53 | 50 |
| 34. | m/ s the icon condominium association, sec-43 | 80 |

| | | |
|---|---|---|
| 35. | m/s the pinnacle condominium association, sec 43 | 80 |
| 36. | m/ s horizone centre, dlf phase_5, zone -6, sec -43 | 100 |
| 37. | m/s one horizone centre dlf city, sec -43 | 100 |
| 38. | m/s commercial block -3, zone -6, ph-5, dlf city, sec -43(american express) | 65 |
| 39. | M/s hotel haus pvt ltd, sec -43 (hotel anya ) | 50 |
| 40. | m/ s homeage builders pvt ltd, sec -43 | 50 |
| 41. | m/s dlf commerical building zone -6, ph-5, sec -43 | 80 |
| 42. | M/s classic real estate developers pvt ltd sec -43 | 50 |
| 43. | M/s Vipul infaracon pvt. ltd, vipul tech square golf course road, sec -43 | 50 |
| 44. | m/ s DD resort pvt ltd, sec -43 | 50 |
| 45. | m/ s gulab farms pvt ltd, sec -42 | 100 |
| 46. | m/ s dlf service ltd, centre court, dlf city, sec -42 | 80 |
| 47. | m/ s good earth properties pvt ltd, sec -42 | 50 |
| 48. | M/s magnolias condominium association, sec -42 | 50 |
| 49. | m/ s princeton estate condominium association dlf city, ph-5, sec -53 | 100 |
| 50. | m/s corlton estate condominium assciation dlf city, ph-5, sec -53 | 100 |
| 51. | M/s dlf limited, community centre 1, zone -7 dlf city, ph-5, sec -53 (club -5 ) | 50 |
| 52. | m/ s roop ram educare pvt ltd dlf city, ph-5, sec -53 | 110 |
| 53. | m/ s ge capital international dlf city, ph -5, sec -53 (G genpact ) | 80 |
| 54. | m/ s commercial complex dlf city ph-5 , sec -53 ( south point mall ) | 65 |
| 55. | m/ s trinity tower estate -4 dlf city, sec -53 | 100 |
| 56. | m/ s willington estate condominium assocation dlf city ph-5 , sec 53 | 100 |
| 57. | m/ s exclusive floors dlf city, ph -5 , sec -53 | 50 |
| 58. | m/s shiv Nader school, dlf ph-1 sec -26 A | 50 |
| 59. | M/s dlf golf resort Ltd club building, ph-5 , dlf city , sec -42 (3) | 80 |
| 60. | m/ s dlf golf resort Ltd club building, ph-5 , dlf city , sec-42 (2) | 50 |
| 61. | M/s dlf Ltd (the Bellaire building-1 , group housing colony , block - a ,b,c , zone - 8 , dlf city , ph-5 , sec- 54 | 100 |
| 62. | m/s arlias condominium association dlf city , ph-5 , sec-42 | 80 |
| 63. | m/s dlf golf resort Ltd, club building, dlf city , ph-5 , sec -42 (1) | 80 |
| 64. | m/ s puri construction pvt Ltd, dlf city , sec-54 ( the palm springs ) | 80 |
| 65. | m/s puri construction pvt Ltd commercial complex golf course, dlf city , sec -54 ( palm spring plaza ) | 65 |
| 66. | m/s residential colony, dlf city, ph-5, sec -54 | 50 |
| 67. | M/s the summit ghs, dlf city, ph-5, sec -54 | 65 |
| 68. | M/s park place condominium association (park heights) park place ph-5, sec-54 | 100 |
| 69. | M/s park place condominium association (park tower) park place , ph-5 , sec -54 | 100 |
| 70. | m/s the Crest dlf ph-5 , sec -54 | 100 |
| 71. | M/s dlf Ltd club building zone -11&12 dlf city ph-5, sec-54 | 50 |
| 72. | m/ s vatika tower , sec _54 | 80 |
| 73. | M/s Uddar gagan properties pvt Ltd. , sec -54 | 100 |
| 74. | M/s sun city , sec -54 | 80 |

| | | |
|---|---|---|
| 75. | m/s vipul Ltd, sec-53 | 50 |
| 76. | M/s centrum plaza clarion properties, sec -53 | 80 |
| 77. | m/s uddar gagan properties pvt. Ltd, ( suncity township) sec -54 | 100 |
| 78. | M/s paras buildtech pvt Ltd, sec -54 | 50 |
| 79. | m/s suncity realtors pvt Ltd, ( suncity school) sec -54 | 100 |
| 80. | M/s haryana orchards pvt Ltd, sec -54 (Bussines tower ) | 80 |
| 81. | m/s vipul Ltd group housing belmonte sec -53 | 80 |
| 82. | M/s vatika land project pvt.ltd , sec -53 | 50 |
| 83. | M/s aerens infotech pvt Ltd, block -a sec -53 ( central plaza ) | 50 |
| 84. | M/s aeran 2 Infotech pvt Ltd Block -B ,Sector -53 ( paras down town centre) | 50 |
| 85. | M/s aerens infotech pvt Ltd, block -c , sec -53 (Augusta point ) | 50 |
| 86. | M/s pega sun buildted pvt Ltd, sec -53 ( ibis hotel) | 80 |
| 87. | M/s puri construction pvt Ltd, sec-53 ( exotica building) | 100 |
| 88. | M/s IFFCO Manager ps,Sector-29 ( iffco tower ) | 25 |
| 89. | m/s essal housing project pvt.ltd Ltd, sec-28 , ( time tower ) | 80 |
| 90. | Sector -17 A Huda colony Gurugram. | 250 |
| 91. | m/s beverly park -1 dlf city ph-2 , | 100 |
| 92. | m/s jai yatayat Ltd dlf city centre gurgaon mg road metro station , sec -28 | 80 |
| 93. | M/s mgf commercial complex , sec -28 | 80 |
| 94. | Sarhaul near govt high school ,Gurugram | 300 |
| 95. | IDC colony sector-16 Gurugram | 30 |
| 96. | M/s vatika field pvt Ltd , mg road , sec -28 ( vatika first India place ) | 50 |
| 97. | Sector-14 near tubewell no 7, Gurugram | 250 |
| 98. | m/s vipul Ltd, sec -28 ( vipul agora ) | 50 |
| 99. | m/s sahara india mall commercial corporation, mg road , sec -28 | 50 |
| 100. | Rajindra Park II,Near Police station Gurugram | 200 |
| 101. | Sector-39,Rambagh, Gurugram | 400 |
| 102. | Sector -39 Jharsa gurugram | 200 |
| 103. | M/s jmd Ltd, jmd regent aracade, mg road , sec -28 | 50 |
| 104. | M/s kishan chand ( jmd empire square ), mg road sec-28 | 65 |
| 105. | m/s Pnv construction pvt Ltd, sec -28 ( sewa salcon platina ) near skinderpur metro station | 50 |
| 106. | m/s mega city mall condominium association, sec -28 | 50 |
| 107. | m/s bright star hotel pvt.ltd, sec -28 ( Bristol hotel ) | 100 |
| 108. | m/s jassum propcon properties pvt Ltd, sec -25( abw tower ) | 50 |
| 109. | m/s emcipi electronices pvt Ltd, sec-25 ( delta square) | 50 |
| 110. | m/s sewa corporate park , sec-25 | 50 |
| 111. | m/s unitech Ltd, sec -25 (gurgaon central mall ) | 100 |
| 112. | m/s vatika triangle sushant lok ph -1 , sec-28 near mg metro station | 50 |
| 113. | m/s New Delhi hotel Ltd GPA, sec -25 , (heritage city ) near mg metro station | 100 |
| 114. | m/s N.S.R farms pvt Ltd ( mgf metropolitan mall ) , sec -25 near mg metro station | 80 |

| | | |
|---|---|---|
| 115. | m/s vatika Ltd vatika triangle sushant lok -1 block - A , sec -25 ( vatika city point ) | 50 |
| 116. | m/s dlf beverly park -2 condominium dlf ph-2 , sec-25 mg road , near mg metro station | 100 |
| 117. | m/s bharat Singh c/o J.M.D REGENT square, sec -25 | 50 |
| 118. | m/s dlf limited city ph-2 block L , sec -25 | 100 |
| 119. | m/s shakuntla yadav GHC ( THE vILAS ) sec -25 dlf ph-2 | 100 |
| 120. | m/ s dlf Ltd, building no -10 ,sec-25 , ph-2 | 200 |
| 121. | m/s building no-8 , ph-2 , sec-25 | 200 |
| 122. | m/s building no -3 , ph-2 , sec-25 | 200 |
| 123. | m/s dlf universal Ltd shopping mall dlf city , ph-2 , sec -25 ( rk four square building no -4 ) | 50 |
| 124. | m/s building eriessen block-1 , ph-3 , sec- 25 , 25 a | 65 |
| 125. | m/s dlf universal Ltd shopping mall complex, ph-3 , sec -25 a ( building no -9) | 100 |
| 126. | m/ s building no-14 , ph-3 , sec -25 a | 150 |
| 127. | m/s building no-6 , ph-3 , sec -24,25 | 150 |
| 128. | m/s dlf belevedre tower condominium, ph-2 , sec-24/25 | 100 |
| 129. | m/s dlf commercial building in block - R , ph-3 , sec -24/25 ( gateway tower ) | 50 |
| 130. | m/s building no-2 , cyber green part -1 , ph-3 , sec -24/25 | 65 |
| 131. | m/s dlf universal Ltd , building no-7 , ph-3 , sec -24/25 | 50 |
| 132. | m/s building no-5 , ph-3 , sec -24/25 ( dlf aptome tower ) | 150 |
| 133. | m/s belvedere park , ph-3 , cyber city , sec -24/25 | 150 |
| 134. | m/s unitech Ltd , sec-15 , part -2 , ( signature tower -3 ) | 100 |
| 135. | M/s Apra Motels,Sector -15 ,part -II ( 32nd hotel ) | 50 |
| 136. | m/s Dy General manager (IA) HSIIDC, sec 20 ph1 gurgaon | 100 |
| 137. | m/S Dy General manager (IA) HSIIDC, SEC 20, ph 2 and 3, gurugram | 100 |
| 138. | m/S Dy General manager (IA) HSIIDC,SEC 19 PHASE 5,Gurugram | 100 |
| 139. | M/S Dy General manager (IA) sec 19 minar, Gurugram | 100 |
| 140. | m/S Dy General manager (IA) HSIIDC, sec-20 ph-4, Gurugram | 100 |
| 141. | m/S Dy General manager (IA) HSIIDC , sec 18 ph-4,Gurugram | 100 |
| 142. | m/s pansut udyog,plot no.18,near maruti material gate,Gurugram | 50 |
| 143. | m/S maruti udyog Ltd. sec 18, | 125 |
| 144. | M/s vatika hotel pvt Ltd, iris hotel site-1 sec-29 gurgaon (Westin hotel) | 50 |
| 145. | m/s unitech Ltd commercial colony, (Marriot Hotel) sec-27 gurgaon | 65 |
| 146. | m/s rapid metro station 42/43 | 50 |
| 147. | m/s rapid metro station sec53/54 | 50 |
| 148. | m/s rapid metro station sec -52/53 ( 54 check) | 50 |
| 149. | m/s bharat petroleum sec -53 near western heights | 50 |
| 150. | M/s Ansal Properties,Sushant lok , Block C1,Sector-43 | 100 |
| 151. | m/s sushant lok-1 , block -c , sec -43 | 200 |
| 152. | M/s dlf Ltd police post, site no -3 , zone -6 , ph -5 , opposite two horizone | 25 |
| 153. | M/s Katara C Estate pvt ltd ( Sandstone Crest) Sec-43 Gurgaon | 65 |

| | | |
|---|---|---|
| 154. | m/s unitech business pvt ltd, trade centre Sec-43 gurgaon | 80 |
| 155. | m/s dlf ridge wood estate dlf phase 4 gurgaon | 100 |
| 156. | m/s dlf Hamilton court Windsor court reg park sec-27 gurugram | 100 |
| 157. | m/s ambience hospitality pvt lts, palm club , block-B Sushant lok-1, Sec-27 Ggn | 50 |
| 158. | M/s ivy residential complex sec-28 Sushant Lok-1 block A | 80 |
| 159. | Kanhayi Near Govt School,Gurugram | 200 |
| 160. | m/s president arwa manager, laburnum complex sec-28 ggn | 100 |
| 161. | M/s dlf estate developer Ltd, block-d , ph-1 , sec -26 near summer field school | 100 |
| 162. | m/s dlf properties Ltd, block-g , ph-1 , sec -26 | 150 |
| 163. | M/s dlf ph-4 , sec -28 | 150 |
| 164. | M/s dlf estate developer Ltd shopping mall arjun marg , ph-1 block -a , sec -26 , near mega mall golf course road | 100 |
| 165. | m/s dlf city ph-2 , block-p , sec -25 | 100 |
| 166. | m/s dlf properties Ltd dlf city ph-1 , block -b , sec -26 | 150 |
| 167. | m/s dlf oakwood ESTATE condominium association ph-2 , sec -25 | 80 |
| 168. | M/s dlf estate developer Ltd block -s, ph-3 , sec -25 near Neel kanth hospital | 150 |
| 169. | m/s DLF Ltd, ph-3 , block - v , sec -24 near by mother dairy nathupur village | 150 |
| 170. | m/s dlf Ltd , block- U , ph-3 , sec -24 , behind RBS building | 150 |
| 171. | m/s global aracade hotel , sec -26 ( fortune hotel near guru dronacharya metro station) | 50 |
| 172. | M/s rapid metro station gurgaon , sec -26 , ph-1 | 50 |
| 173. | M/s dlf mega mall condominium association, ph-1 , sec -28 | 50 |
| 174. | m/s s. b developers Ltd ph -1 , sec -26 , ( global business park near guru dronacharya metro station) | 100 |
| 175. | m/s sarvamanganamgalam builders and developers Ltd ph-1 tower - d , sec -26 near guru dronacharya metro station | 50 |
| 176. | Vyapar sadan, Gurugram | 250 |
| 177. | Sector-17 A,IFFCO Colony Gurugram. | 300 |
| 178. | m/s dlf Ltd estate block - x , ph-2 , sec -24 , near world laparoscopy hospital | 100 |
| 179. | Sector-17 B, Iffco Colony,Gurugram. | 100 |
| 180. | M/s DLF Ltd Building no.-11,Gurugram | 50 |
| 181. | Sector-18 Gurugram. | 100 |
| 182. | M/s Engineering India ltd, 4 sector 16 , near Huda Boosting station gurugram | 25 |
| 183. | M/s Indian Oil. Corporation Ltd. city Fuels Sec-16 NH-8 Gurugram | 15 |
| 184. | M/s Rapid Metro Rail GurgaonLtd , phase-2 Metro station , gurgaon | 50 |
| 185. | M/S Rapid Metro Rail Gurgaon Ltd, Phase-2, Belvedere Tower, Gurgaon | 50 |
| 186. | M/S Rapid Metro Rail Gurgaon Ltd. phase 2, gateway tower Gurgaon. | 50 |
| 187. | M/S Rapid metro rail Gurgaon ltd. Sikenderpur metro station phase 2 Gurgaon | 50 |
| 188. | M/S DLC Plaza tower ph1 DLC city, power & Service Ltd. Gurugram | 50 |
| 189. | m/s ansal properties sushant lok-1 , block-a, b , sec -27/28 | 200 |
| 190. | m/a dlf rich mand park , sec -43 , ph -4 | 100 |
| 191. | M/s DLF Commercial Complex South Block Ph3 DLF City Corporate Park M G Road | - |

| | | |
|---|---|---|
| 192. | m / s dlf India airlines pilot h.b society mg road , sec 28 , essal tower | 150 |
| 193. | m/s the India airlines essal towers, sec-28 , mg road | 150 |
| 194. | m/ s active security Ltd emmar building near sikanderpur metro station , sec -28 | 50 |
| 195. | m/s silver pokes condominium association , ph -1 , sec -26 near Qutab plaza | 50 |
| 196. | m/s dlf housing and construction shopping mall complex dlf city court , ph -1 , sec -26 | 80 |
| 197. | M/S UNITECH REAL ESTATE DIVISION LTD. HOUSE, SEC-30 UNIWORLD CITY, GURUGRAM | 100 |
| 198. | m/s ambience properties. lagoon apartments Sec-24 Gurgaon | 100 |
| 199. | Sector 45,Kanhayi in front of Ansal API, Gurugram | 250 |
| 200. | M/S DLF india Ltd. Building Block A1 A2 SEZ Sector 30 Gurugram. | 100 |
| 201. | M/s millennium plaza Ltd opposite fire station, sec -27 ( ramfry house) | 50 |
| 202. | M/ s HB ESTATE developer Ltd Taj city centre , plot -1, sec -44 | 50 |
| 203. | M/s Ambience mall complex, ambience island NH-8, sec-25 Gurgaon | 200 |
| 204. | M/s dlf Ltd commercial building , block- R , ph-2 dlf city dlf square, sec -25 near airtel building | 65 |
| 205. | M/s dlf narayanan hospital , ph-3 , sec -24 , opposite shrine ram school | 50 |
| 206. | M/s ambience developers and infrastructure pvt ltd, ambience island ( commercial complex) Sec-24 Gurgaon | 80 |
| 207. | M/s dlf garden estate rwa ph -1 mg road, sec -24 | 100 |
| 208. | M/s ambience developers , caitriona group housing, Ambience island Sec-25 A , Gurgaon | 100 |
| 209. | M/S ORIENTAL SOUTH DELHI HOTEL'S Pvt. Ltd. Pullman Hotel , Central Park , village sikanderpur Ghosi , Sec-26 Gurgaon | 50 |
| 210. | M/s dlf Ltd dlf city arjun marg , ph -1 , atria building , sec -25 near dlf square | 65 |
| 211. | Sector-43, Gurugram | 300 |
| 212. | Village Sukhrali , inside community centre Gurugram. | 150 |
| 213. | M/s Munjal Showa Ltd, plot no-9-11, Maruti industrial area, Sec-18 Gurgaon | 80 |
| 214. | Sector 31, Gurugram. | 200 |
| 215. | Sector-39/40 Gurugram. | 200 |
| 216. | Nathupur Sudha Mohalla Gurugram. | 200 |
| 217. | Nathupur Shiv Mandir, Kapil Dairy,Gurugram. | 200 |
| 218. | Sikanderpur Opposite Metro Pillar no.- 26,Gurugram. | 200 |
| 219. | Chakkarpur Housing Board,Gurugram.. | 200 |
| 220. | Chakkarpur Near Power House,Gurugram. | 300 |
| 221. | Old DLF,Sector 14,Gurugram | 100 |
| 222. | Sector 44, Gurugram. | 300 |
| 223. | Sector 30 Silokhera Village Near Plaza Hotel,Gurugram. | - |
| 224. | M/S MOON LIGHT CONTINENTAL M.G.F PLAZA, M.G. ROAD, GURUGRAM | 80 |
| 225. | M/s National Media Centre, NH-8 DLF phase-III,Gurugram. | 100 |
| 226. | M/s Sahara India Commercial Corporation Ltd, Sahara indai, Sector 28,Gurugram. | 50 |
| 227. | M/s RK four square bldgno.4 cyber green city phase 2 gurgaon | 50 |
| 228. | M/s DLF Properties ltd,DLF City,Phase-IV,Sector 27/28,Gurugram. | 100 |

| | | |
|---|---|---|
| 229. | M/s J.M.D REGENT COMMERCIAL COMPLEX PLAZA, M.G. ROAD GURUGRAM | 50 |
| 230. | Sector 27, Gurugram. | 200 |
| 231. | Sector 42 ,Gurugram. | 150 |
| 232. | M/s Ansal Properties Industrial Limited, Sushant Lok, Phase-I, Block-C, Sector 43, Gurugram. | 100 |
| 233. | M/s DLF Ltd, Zone-V,DLF V, Gurugram. | 50 |
| 234. | M/s DLF Estate Developers Ltd,Block B,Cybercity,Sector 24,Gurugram. | 100 |
| 235. | M/s Dy. GM unitech South City Phase-I,Block F,Sector 40/41,Gurugram. | 100 |
| 236. | M/s MDI Sector 17,Gurugram. | 100 |
| 237. | Sukhrali Enclave,Atul kataria Chowk,Gurugram. | 50 |
| 238. | NBCC(19070556) | - |
| 239. | BPTP | - |
| 240. | RAMPRASTHA-20020638 | - |
| 241. | Executive Engineer, MCG Kadipur Booster-18090016 | - |
| 242. | SEC 10-18090024 | - |
| 243. | SEC 37 -18090005 | - |
| 244. | SEC 37 -(near BBT)- 18090006 | - |
| 245. | MANDI | - |
| 246. | Civil Lines-18090025 | - |
| 247. | sec 15 part I-18090028 | - |
| 248. | Sec 15 Part-II-18090029 | - |
| 249. | Sec 31-18090100 | - |
| 250. | Sec 32-18090084 | - |