Alvora Keyfob — PCB Designer Brief (Full, Consolidated)

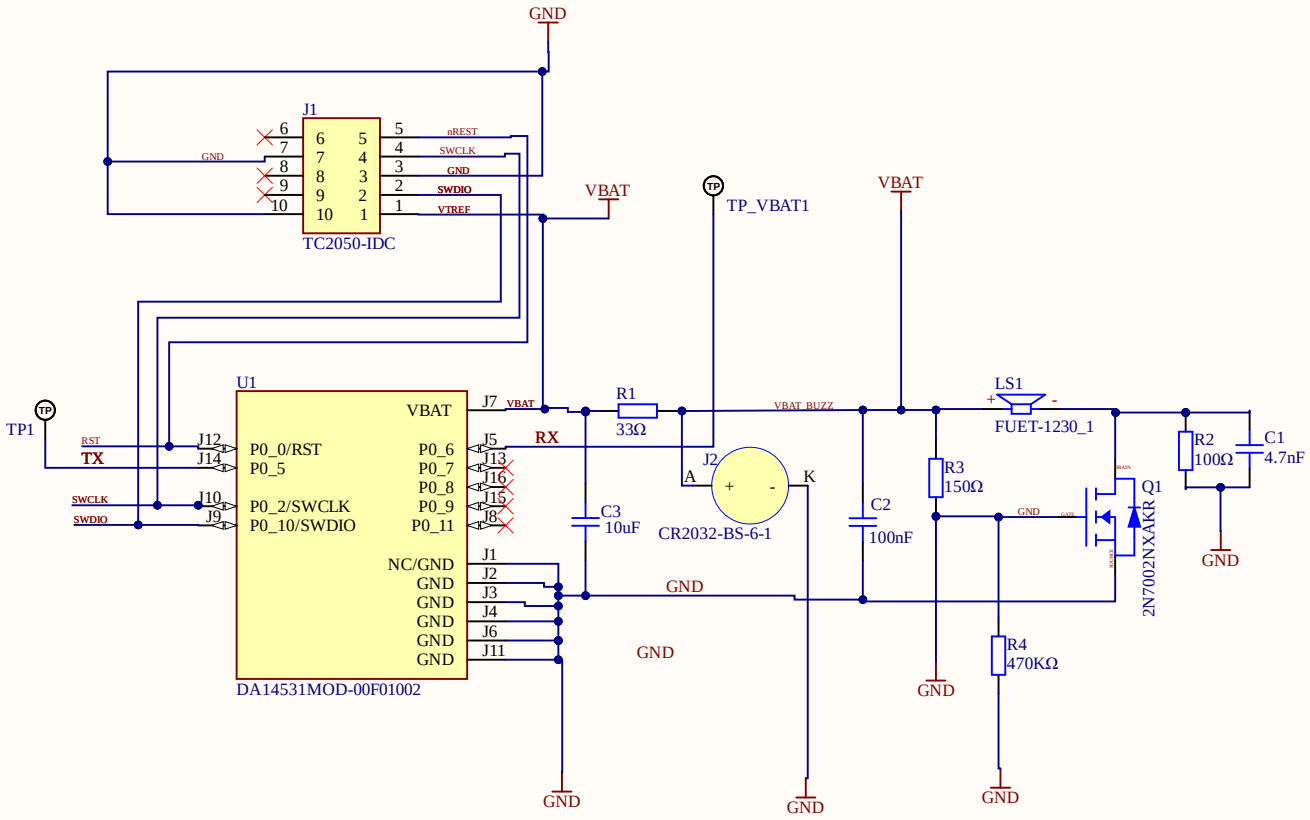

Title		
Size A4	Number	Revision
Date: 10-17-2025		Sheet of
File: C:\Users\..\BLE.SchDoc		Drawn By:

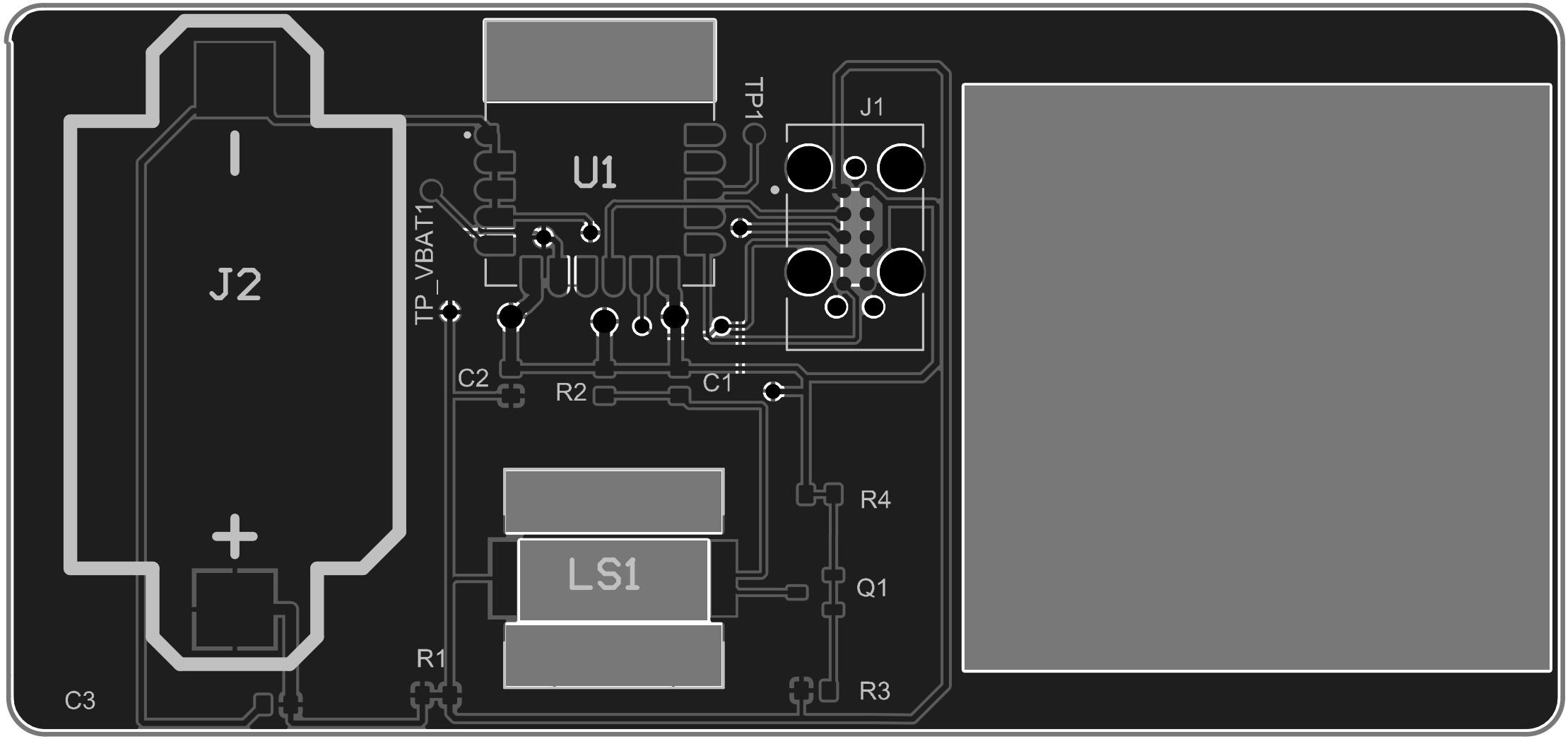
J2
U1
TP1
J1
TP_VBAT1
C2
R2
C1
R4
LS1
Q1
R1
R3
C3