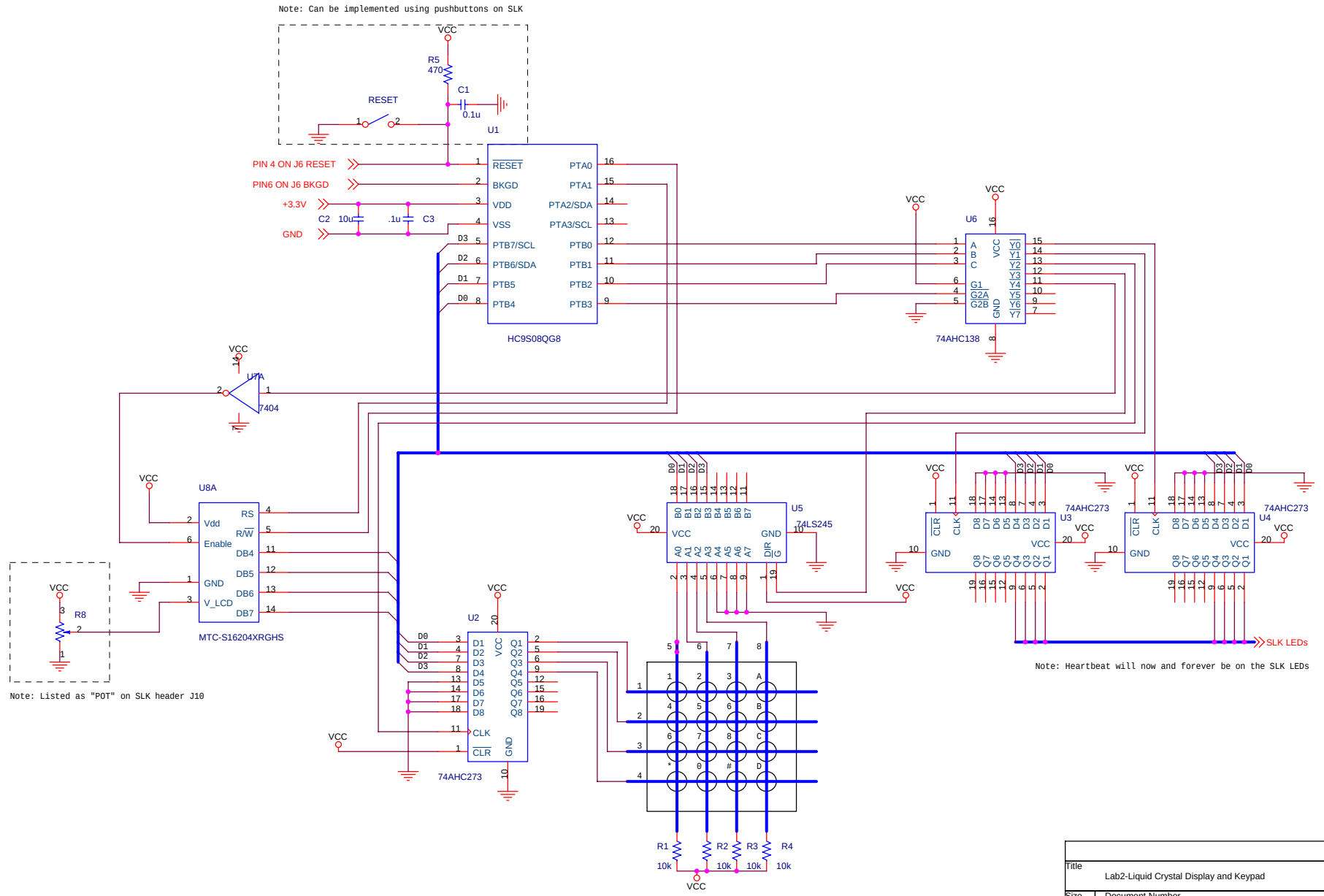

Title	Lab2-Liquid Crystal Display and Keypad
Size B	Document Number 1
Rev	<RevCode>
Date:	Tuesday, January 24, 2006
Sheet	1 of 1