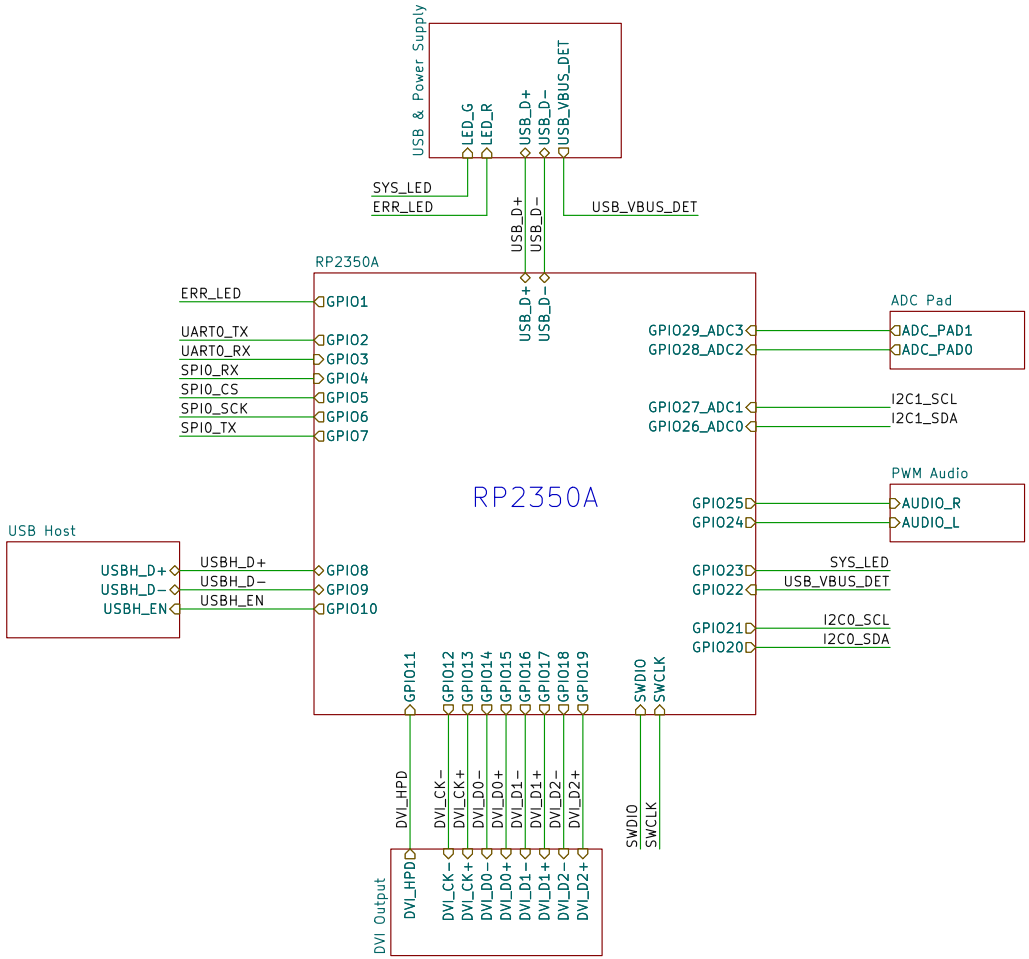

#	F0	F1	F2	F3	F11
0		SPI0 RX	UART0 TX	I2C0 SDA	
1		SPI0 CSn	UART0 RX	I2C0 SCL	
2		SPI0 SCK	UART0 CTS	I2C1 SDA	UART0 TX
3		SPI0 TX	UART0 RTS	I2C1 SCL	UART0 RX
4		SPI0 RX	UART1 TX	I2C0 SDA	
5		SPI0 CSn	UART1 RX	I2C0 SCL	
6		SPI0 SCK	UART1 CTS	I2C1 SDA	UART1 TX
7		SPI0 TX	UART1 RTS	I2C1 SCL	UART1 RX
8		SPI1 RX	UART1 TX	I2C0 SDA	
9		SPI1 CSn	UART1 RX	I2C0 SCL	
10		SPI1 SCK	UART1 CTS	I2C1 SDA	UART1 TX
11		SPI1 TX	UART1 RTS	I2C1 SCL	UART1 RX
12	HSTX	SPI1 RX	UART0 TX	I2C0 SDA	
13	HSTX	SPI1 CSn	UART0 RX	I2C0 SCL	
14	HSTX	SPI1 SCK	UART0 CTS	I2C1 SDA	UART1 TX
15	HSTX	SPI1 TX	UART0 RTS	I2C1 SCL	UART1 RX
16	HSTX	SPI0 RX	UART0 TX	I2C0 SDA	
17	HSTX	SPI0 CSn	UART0 RX	I2C0 SCL	
18	HSTX	SPI0 SCK	UART0 CTS	I2C1 SDA	UART0 TX
19	HSTX	SPI0 TX	UART0 RTS	I2C1 SCL	UART0 RX
20		SPI0 RX	UART1 TX	I2C0 SDA	
21		SPI0 CSn	UART1 RX	I2C0 SCL	
22		SPI0 SCK	UART1 CTS	I2C1 SDA	UART1 TX
23		SPI0 TX	UART1 RTS	I2C1 SCL	UART1 RX
24		SPI1 RX	UART1 TX	I2C0 SDA	
25		SPI1 CSn	UART1 RX	I2C0 SCL	
26		SPI1 SCK	UART1 CTS	I2C1 SDA	UART1 TX
27		SPI1 TX	UART1 RTS	I2C1 SCL	UART1 RX
28		SPI1 RX	UART0 TX	I2C0 SDA	
29		SPI1 CSn	UART0 RX	I2C0 SCL	

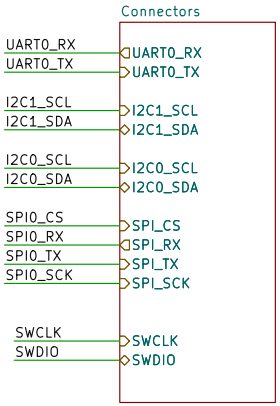

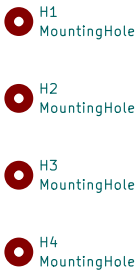

© 2026 Shunsuke Michii
SPDX−License−Identifier: CERN−OHL−P−2.0
https://github.com/harukasan/harucom−board/

Sheet: /
File: harucom−board.kicad_sch

Title: Harucom−board

Size: A4	Date: 2026−04−03	Rev: 3B
KiCad E.D.A. 9.0.8		Id: 1/8

Power Supply

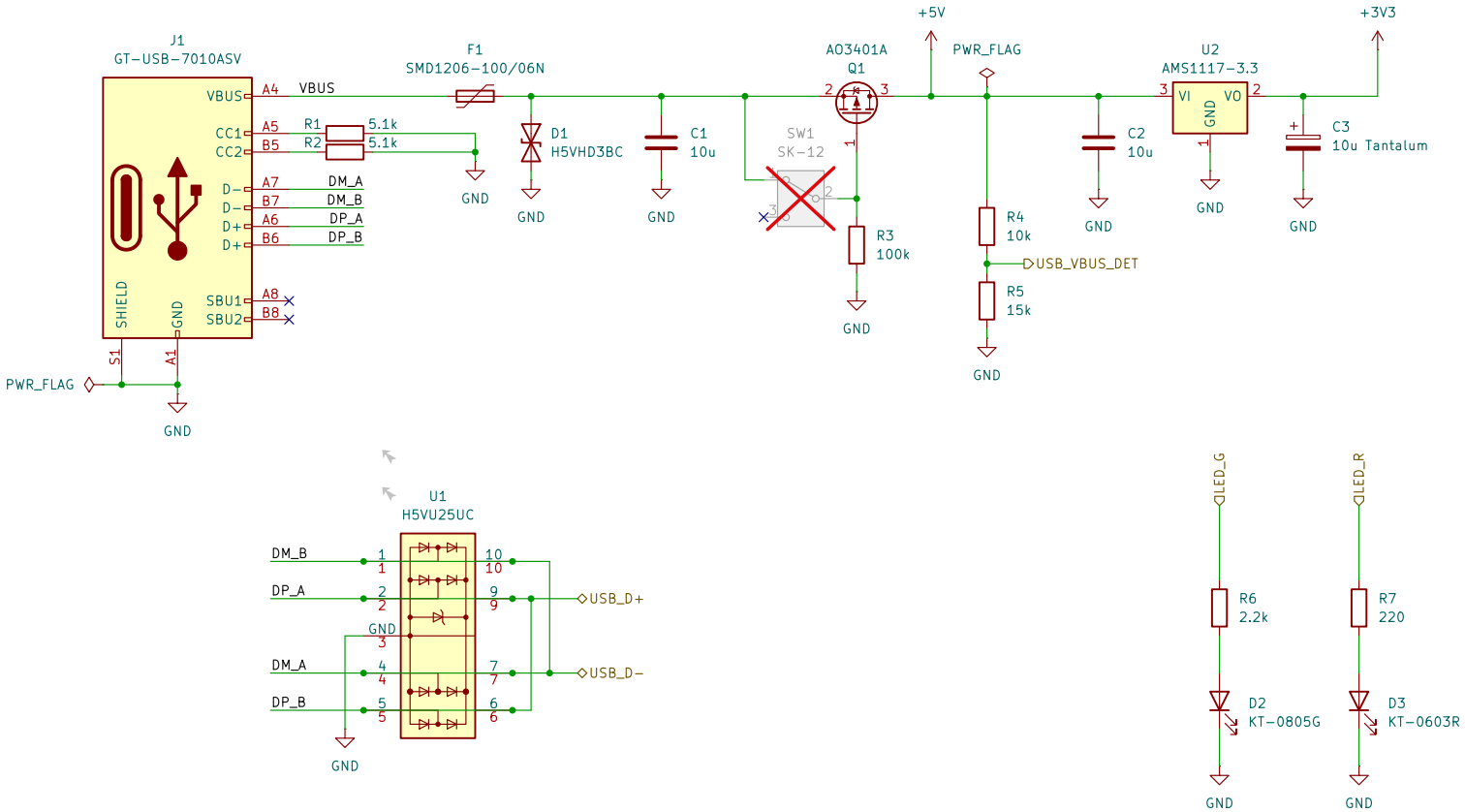

© 2026 Shunsuke Michii
SPDX-License-Identifier: CERN-OHL-P-2.0
https://github.com/harukasan/harucom-board/

Sheet: /USB & Power Supply/
File: usb_power.kicad_sch

Title: Harucom-board

Size: A4	Date: 2026-04-03	Rev: 3B
KiCad E.D.A. 9.0.8		Id: 2/8

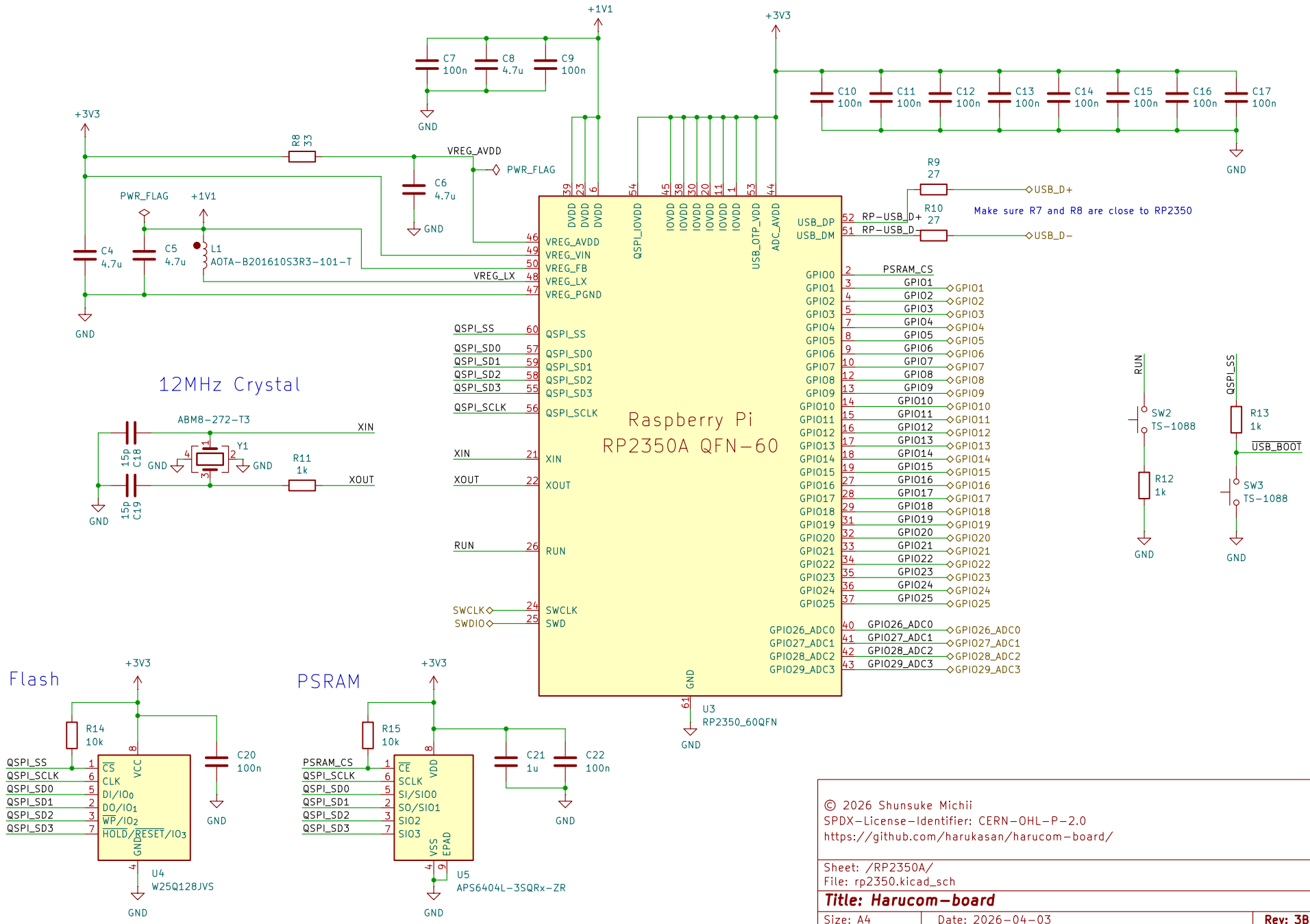

© 2026 Shunsuke Michii
SPDX-License-Identifier: CERN-OHL-P-2.0
https://github.com/harukasan/harucom-board/

Sheet: /RP2350A/
File: rp2350.kicad_sch

Title: Harucom-board

Size: A4	Date: 2026-04-03	Rev: 3B
KiCad E.D.A. 9.0.8		Id: 3/8

USB Host Interface

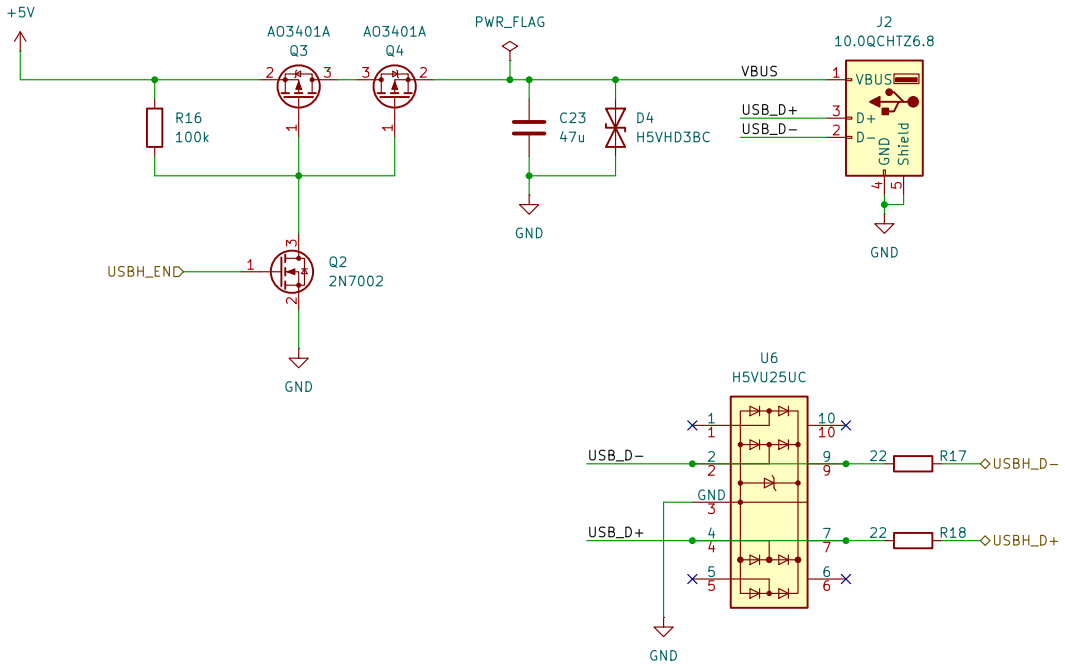

© 2026 Shunsuke Michii
SPDX-License-Identifier: CERN-OHL-P-2.0
https://github.com/harukasan/harucom-board/

Sheet: /USB Host/
File: usb_host.kicad_sch

Title: Harucom-board

Size: A4	Date: 2026-04-03	**Rev: 3B**
KiCad E.D.A. 9.0.8		Id: 4/8

High-Definition Digital Video Interface

See https://github.com/Wren6991/PicoDVI

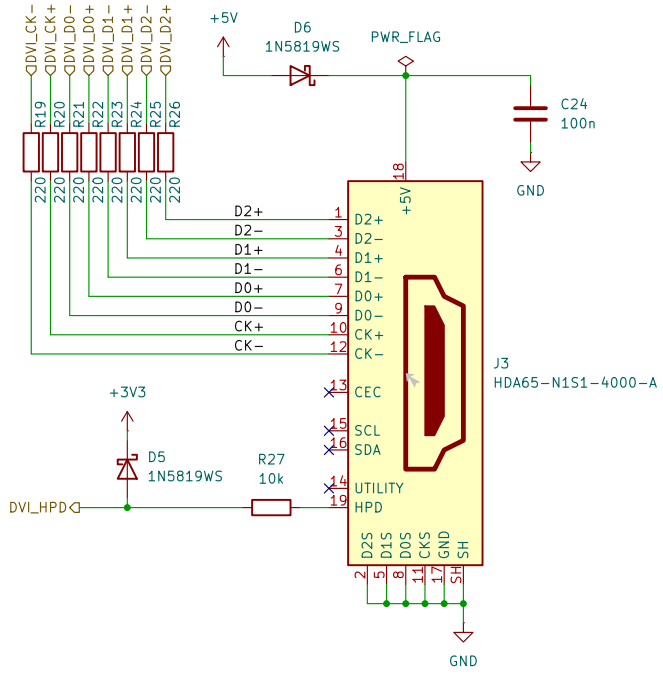

© 2026 Shunsuke Michii
SPDX−License−Identifier: CERN−OHL−P−2.0
https://github.com/harukasan/harucom−board/

Sheet: /DVI Output/
File: dvi_output.kicad_sch

Title: Harucom−board

Size: A4	Date: 2026−04−03	**Rev: 3B**
KiCad E.D.A. 9.0.8		Id: 5/8

PWM Audio

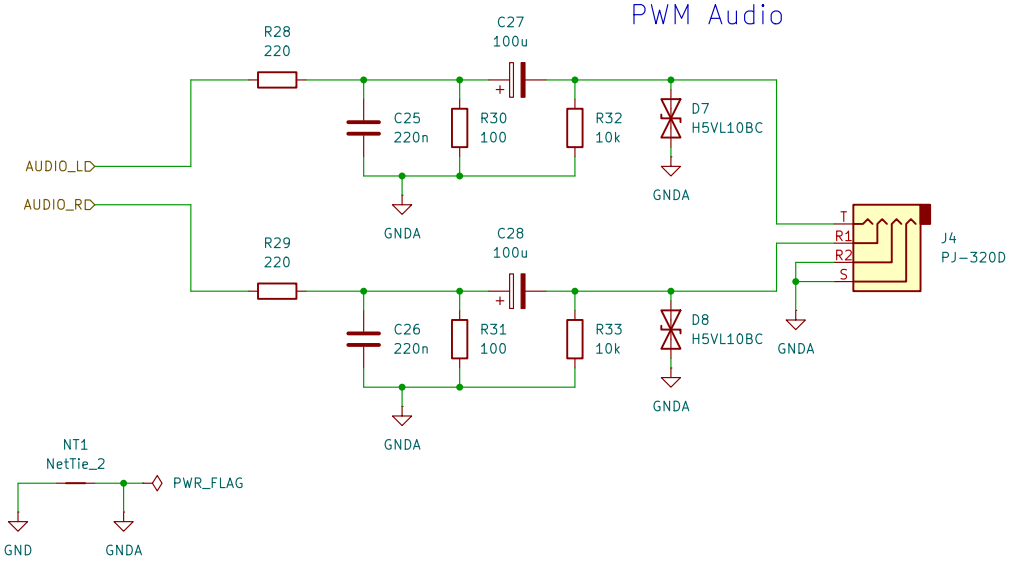


```
PWM Audio Low-Pass Filter
-----------------------------------------
Cutoff Frequency (fc) Calculation:

Due to the voltage divider (R28 & R30),
the equivalent Thevenin resistance (R_th)
must be used for the RC filter calculation.

R_th = R28 || R30
     = (220 * 100) / (220 + 100)
     = 68.75 Ohms

fc   = 1 / (2 * pi * R_th * C24)
     = 1 / (2 * 3.14159 * 68.75 * 220e-9)
     = 10,523 Hz (approx. 10.5 kHz)
```

© 2026 Shunsuke Michii
SPDX-License-Identifier: CERN-OHL-P-2.0
https://github.com/harukasan/harucom-board/

Sheet: /PWM Audio/
File: pwm_audio.kicad_sch

Title: Harucom-board

Size: A4	Date: 2026-04-03	**Rev: 3B**
KiCad E.D.A. 9.0.8		Id: 6/8

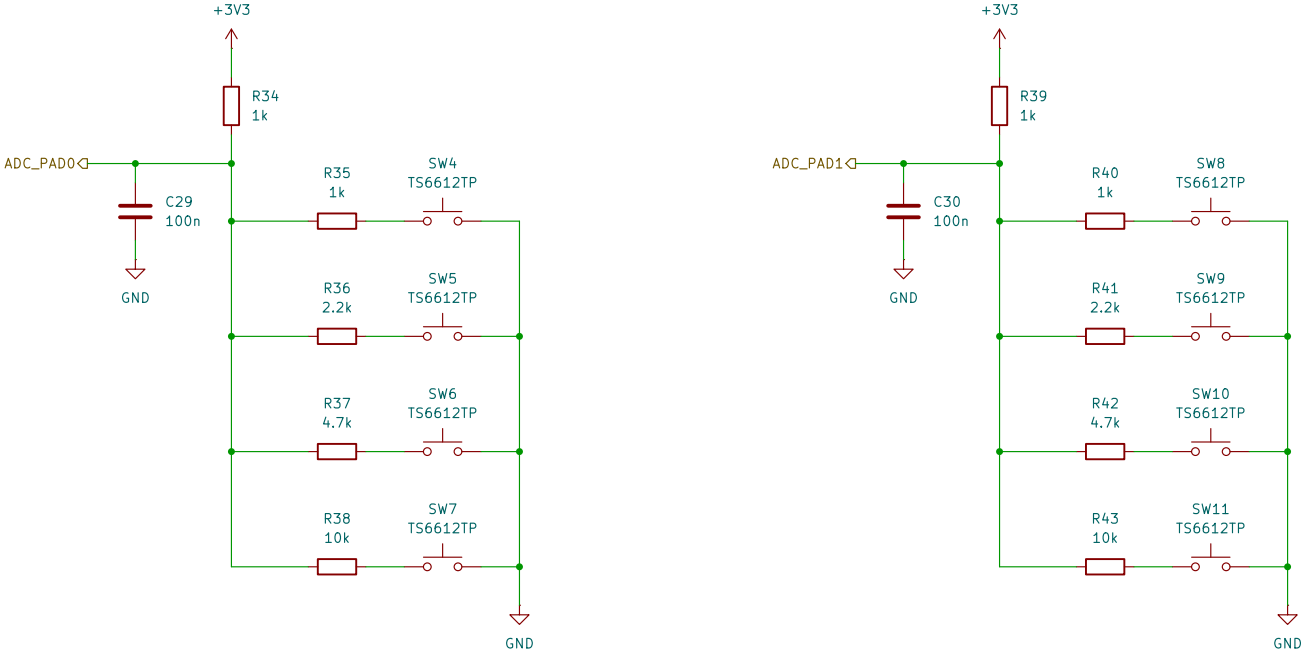

© 2026 Shunsuke Michii
SPDX-License-Identifier: CERN-OHL-P-2.0
https://github.com/harukasan/harucom-board/

Sheet: /ADC Pad/
File: adc_pad.kicad_sch

Title: Harucom-board

Size: A4	Date: 2026-04-03	Rev: 3B
KiCad E.D.A. 9.0.8		Id: 7/8

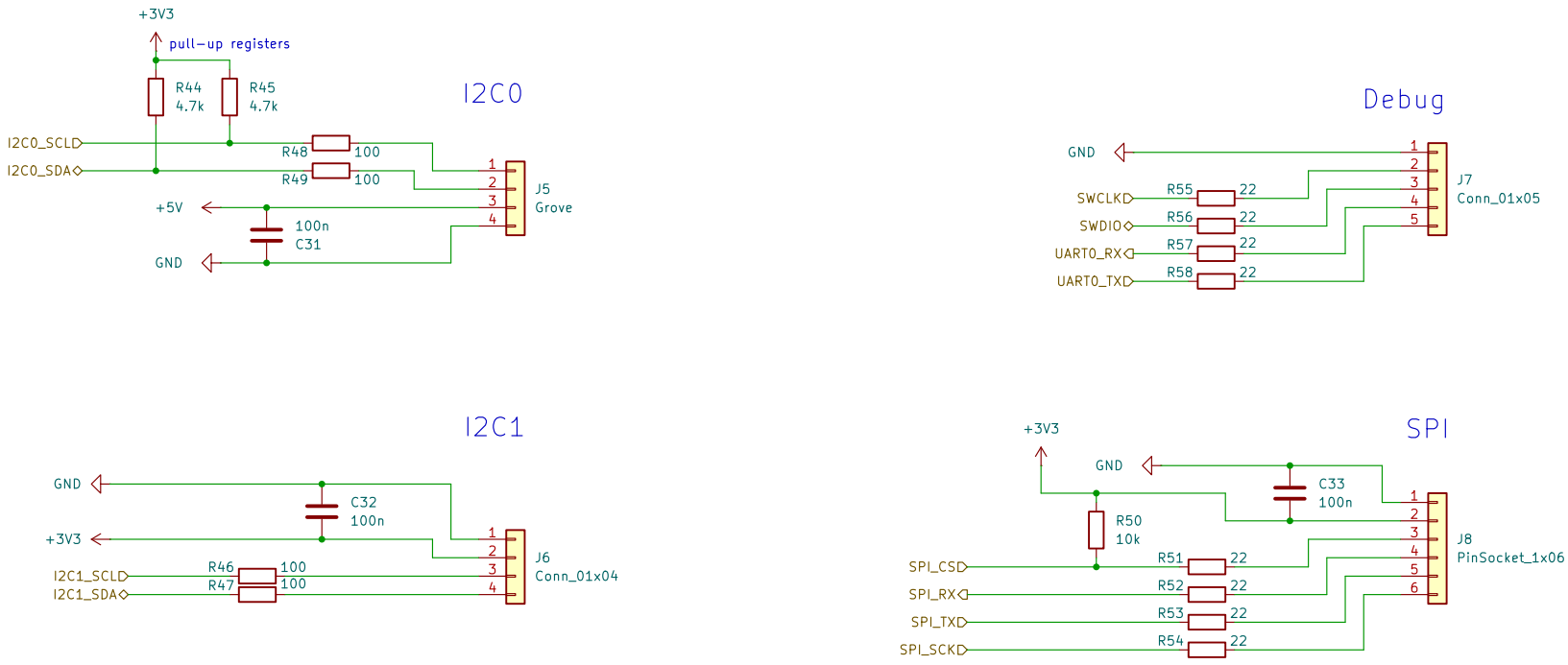

© 2026 Shunsuke Michii
SPDX-License-Identifier: CERN-OHL-P-2.0
https://github.com/harukasan/harucom-board/

Sheet: /Connectors/
File: connectors.kicad_sch

Title: Harucom-board

Size: A4	Date: 2026-04-03	Rev: 3B
KiCad E.D.A. 9.0.8		Id: 9/8