MICROROC is dedicated chip for GEM/MICROMEGAS. MICROROC(pin pin compatible with HR2b) is based on HR2b same back-end, same readout format, same pinout, only the preamplifier is changing
Dynamic range 1fC~500fC

The GEM detector is designed as 37cm*37cm, and its effictive area is 30cm*30cm.
Each Microroc ASIC has 64 readout channels. That is to say some of Microrocs cannot be full used and the unused pin should tied to GND via a capacitor.
The ESD protection is necessary as there might be spark in the GEM.

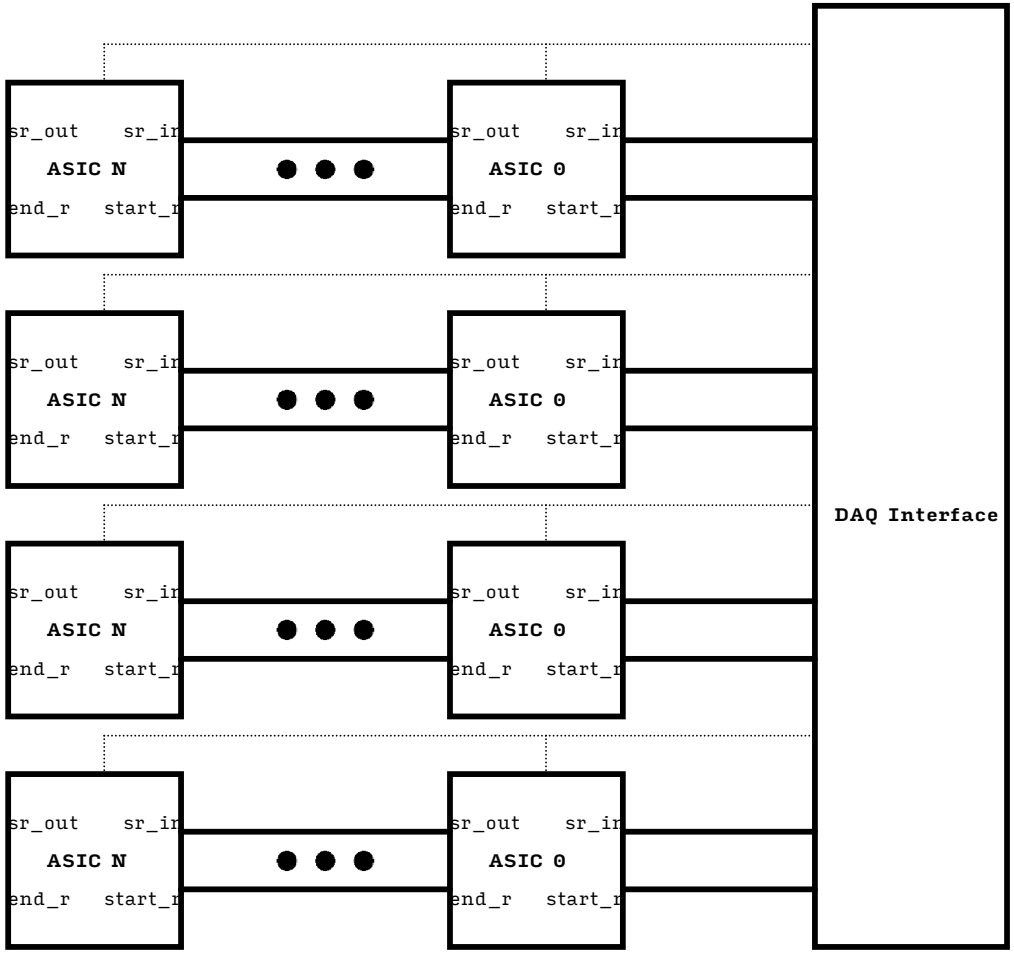

There are 3 kinds of control signals
1. Daisy chain signals: sr_in, sr_out, start_readout, end_readout
2. Independent signal for each chain: Dout1b, Dout2b, TransmitOn1b, TransmitOn2b, ChipSatb, TrigExt, StartAcq, StartReadout1, StartReadout2, sr_rstb, sr_ck, sr_in, EndReadout1, EndReadout2, sr_out
3. Common signals for all chains: 4 LVDS signals, power on signals, reset_b, rst_counterb, select, hold, out_trigger0~2b

FPGA LVDS driver can handle directly many ASICs (6-10) for sure.
But if there is more ASICs, you should use more than 1 dedicated LVDS drivers.
In this design, M-LVDS buffer is used

SDHCal FEB

SDHCal FEB
Version: 1.0
Design Tools: Cadence 16.6
Finish Date: 2018/01/27
Engineer: Yu Wang
Company: USTC

Tips: If there is gibberish, please install the 'Input' font, 'Romantic' font and 'Celestina' font.

Note:All the Title and Document Number is Input, blod, size 10.Rev is Input, size 6.
All the comments is Input, blue size 6
Note: All the unsolder package should value x(Not X)
Capacitor: F(Not f)

Title: SDHCal FEB		
Size: A4	Document Number: Design Info	Rev: v1.0
Date: Monday, January 29, 2018	Sheet 1 of 48	

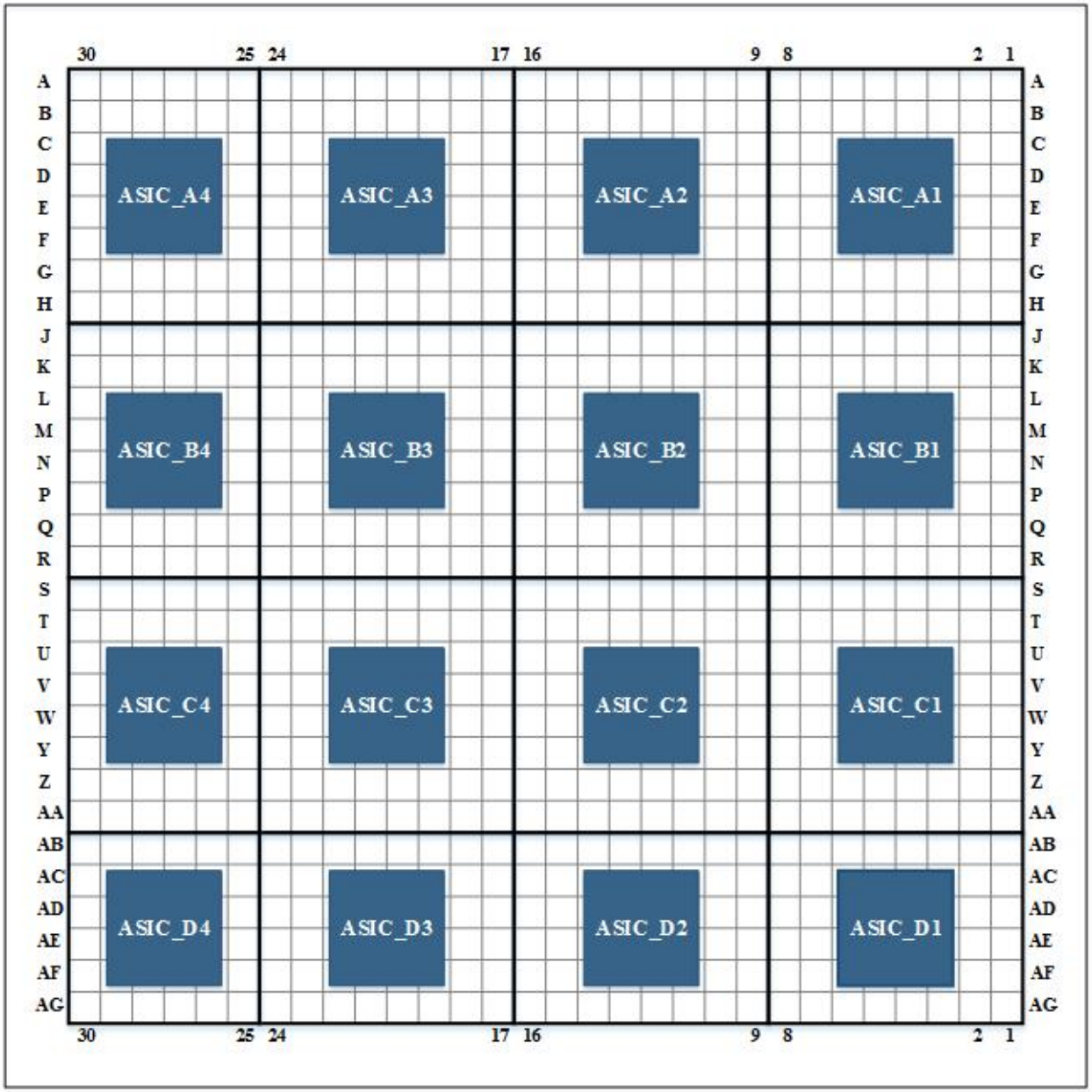

Title	SDHCal FEB	
Size A4	Document Number Design Structure	Rev v1.0
Date: Monday, January 29, 2018	Sheet 2 of 48	

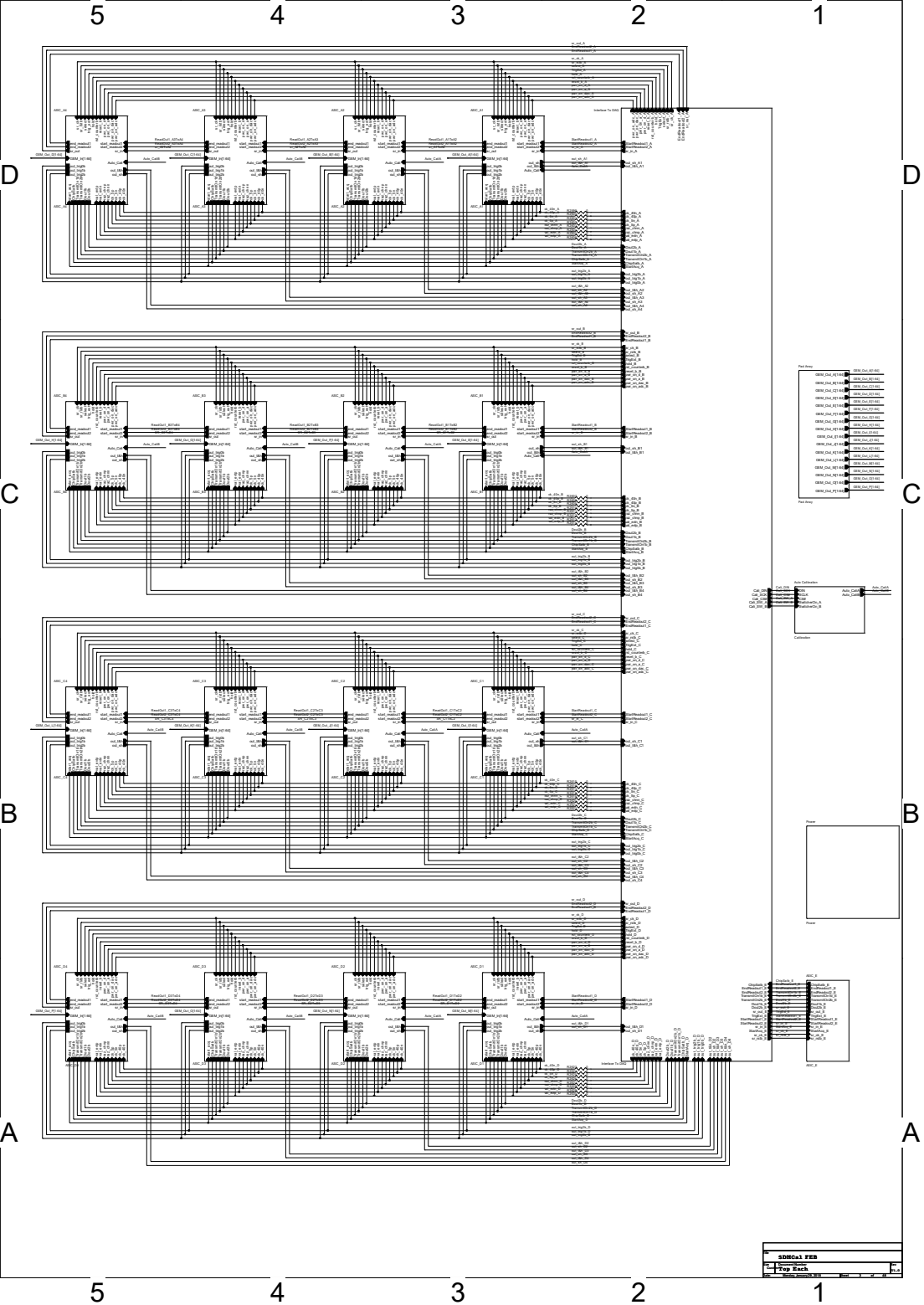
5
4
3
2
1
D
C
B
A
SDHCn1 FEB
Top Each

Although the each channel of MICROROC has a spark protection network, it's recommanded to add external protection circuit. BAV99W is a choise but may not be the best!

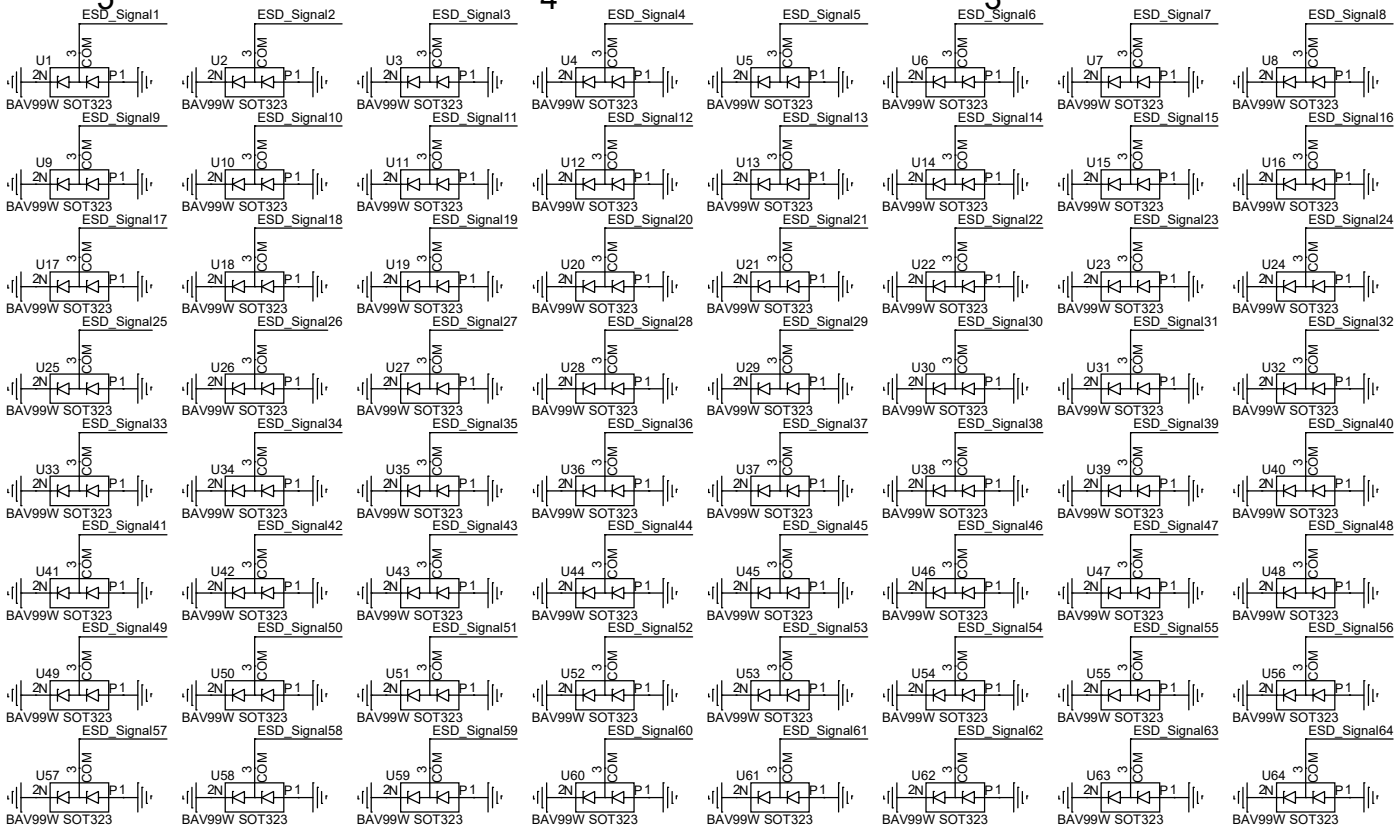

AnalogIn[1:64] AnalogIn[1:64]

GEM_In[1:64] GEM_In[1:64]

VCC3.3VA

VCC3.3VA GND

Title	SDHCal FEB	
Size: Custom	Document Number: ASIC A1 -- Analog In	Rev: V1.0
Date: Monday, January 29, 2018	Sheet 4 of 48	

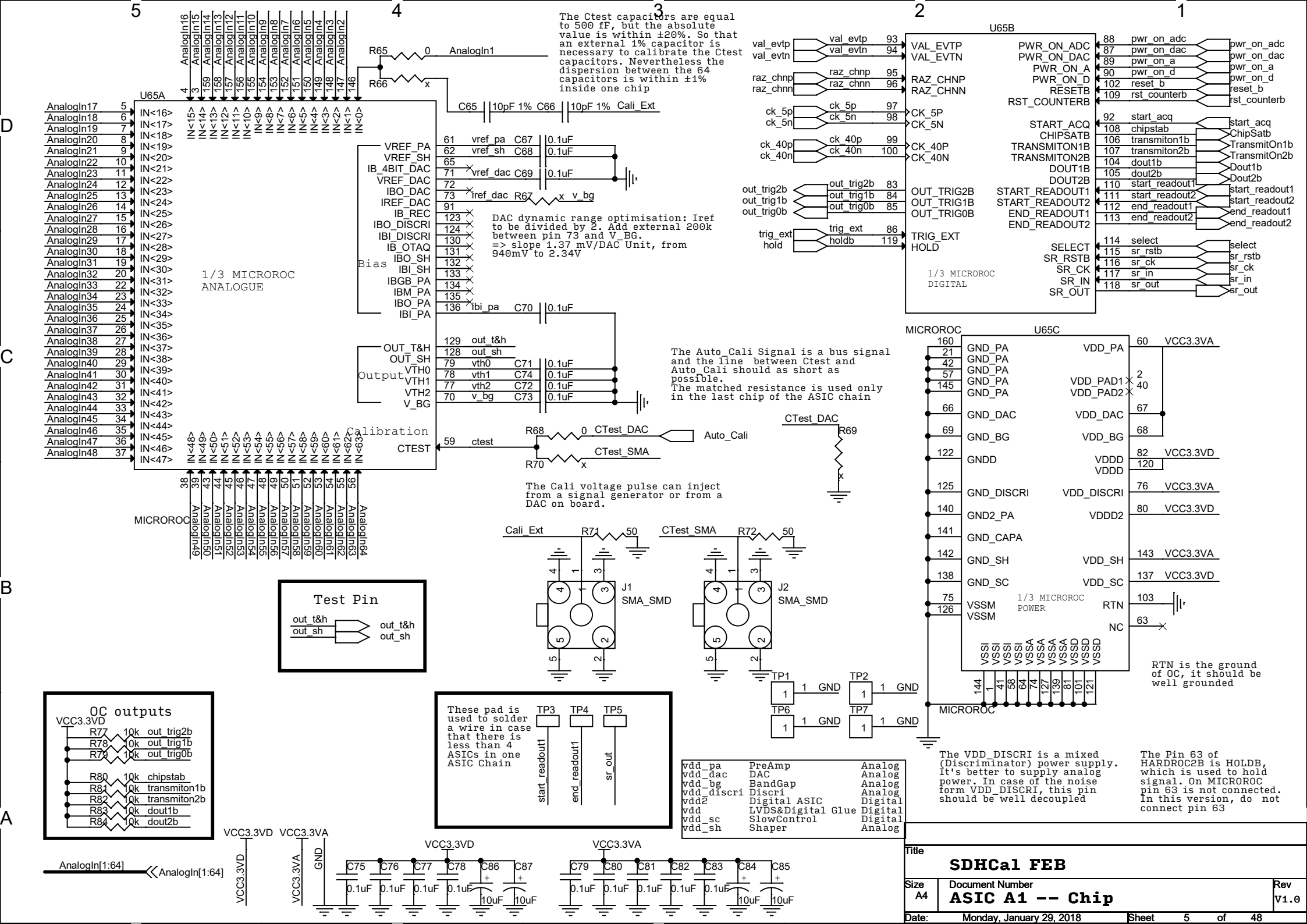

vdd_pa	PreAmp	Analog
vdd_dac	DAC	Analog
vdd_bg	BandGap	Analog
vdd_discri	Discri	Analog
vdd2	Digital ASIC	Digital
vdd	LVDS&Digital Glue	Digital
vdd_sc	SlowControl	Digital
vdd_sh	Shaper	Analog

Size	A4	Document Number	Rev
		ASIC A1 -- Chip	V1.0
Date:	Monday, January 29, 2018	Sheet 5 of 48	

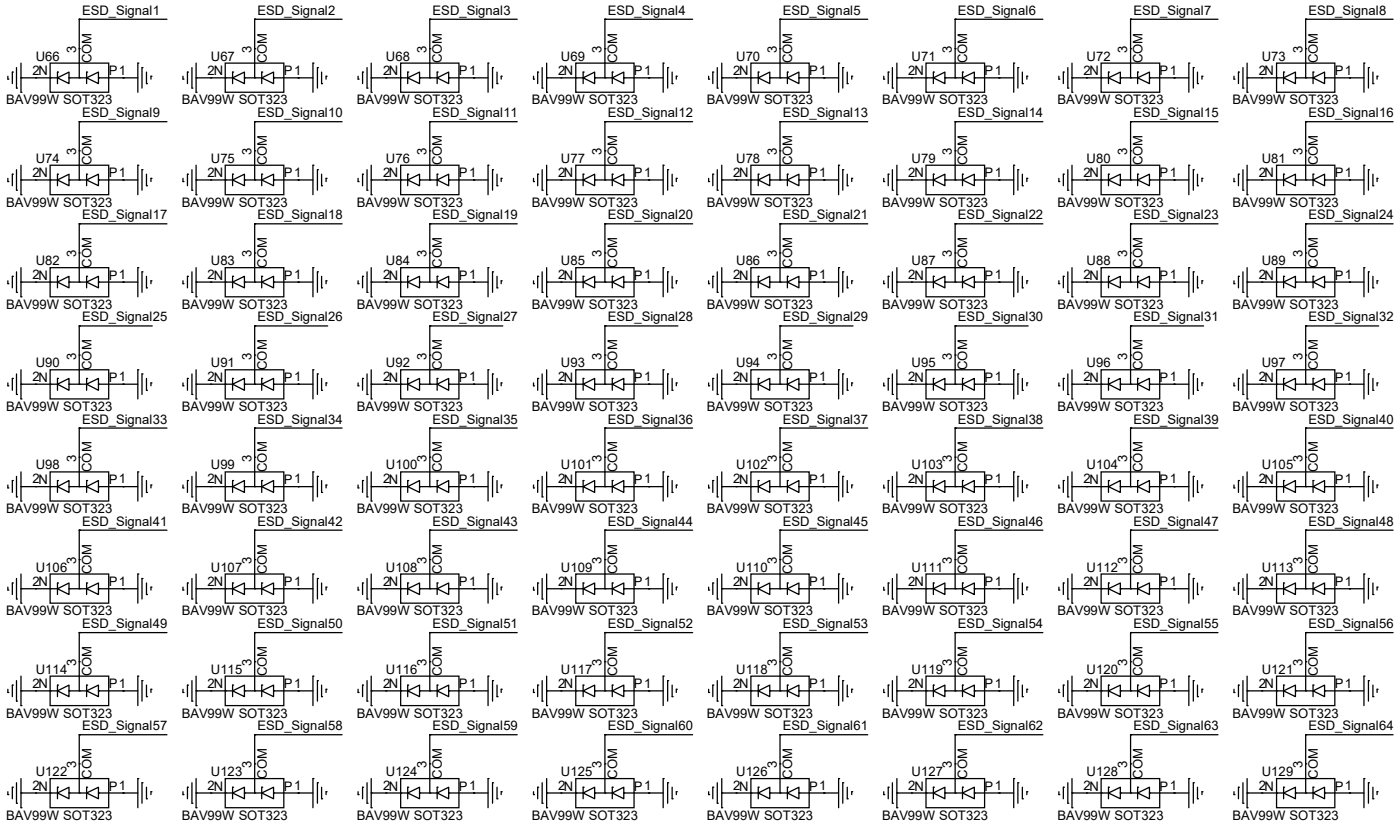

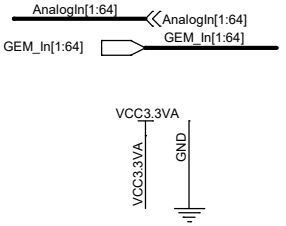

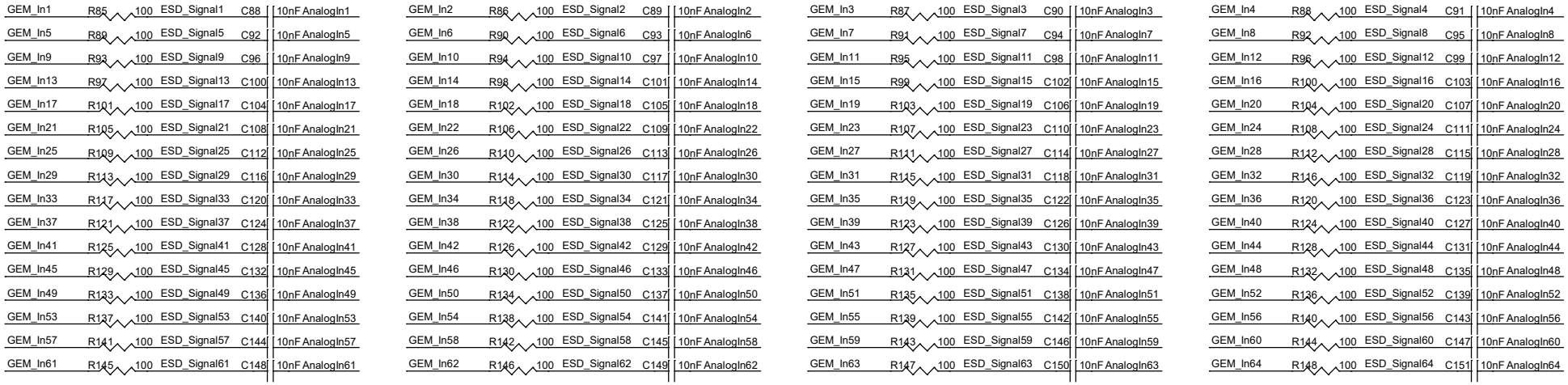

Title	**SDHCal FEB**	
Size: Custom	Document Number: **ASIC A2 -- Analog In**	Rev: V1.0
Date: Monday, January 29, 2018	Sheet 6 of 48	

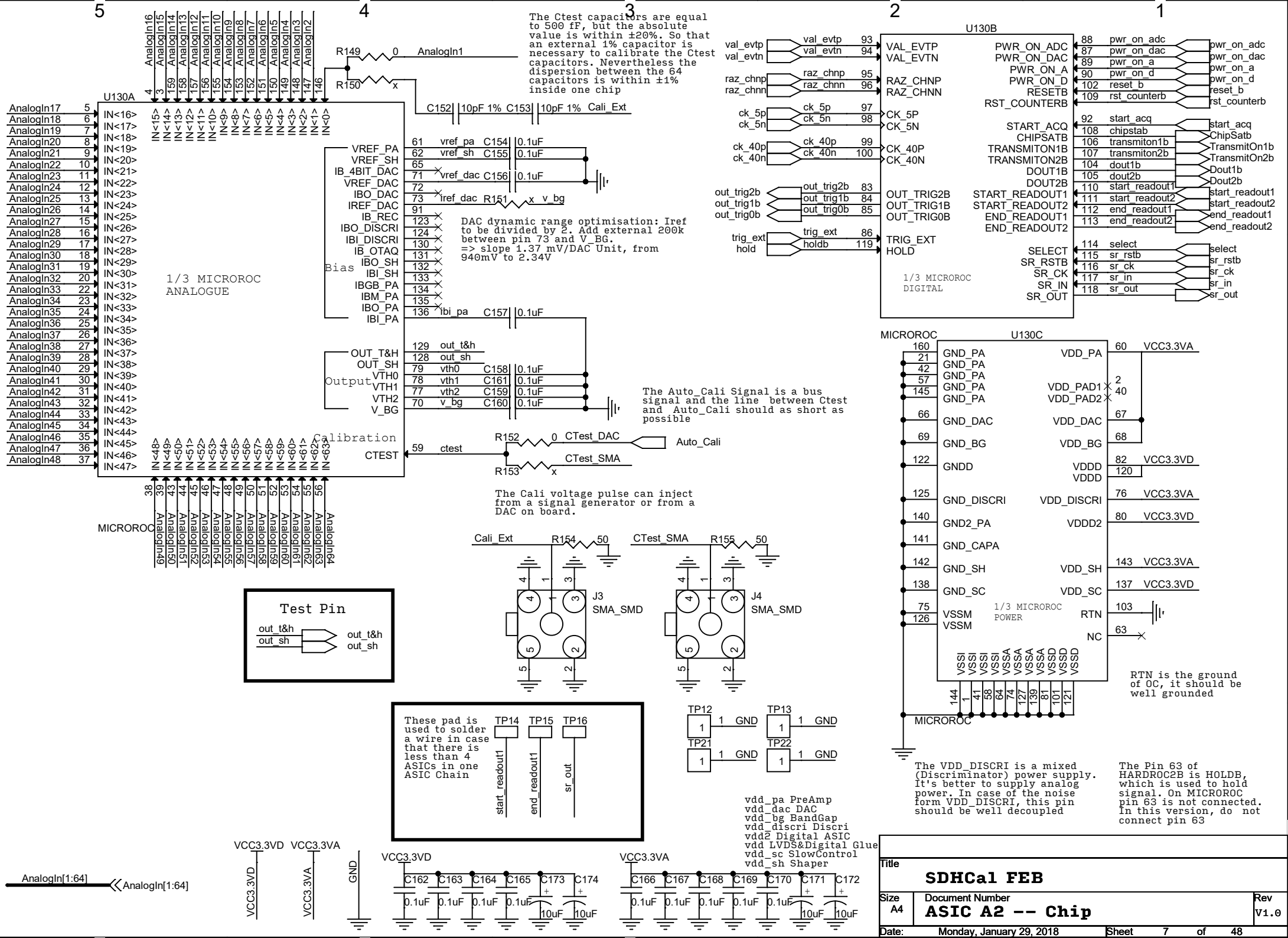
U130A
1/3 MICROROC ANALOGUE
Bias
Output
Calibration
MICROROC
U130B
1/3 MICROROC DIGITAL
U130C
MICROROC
1/3 MICROROC POWER
The Ctest capacitors are equal to 500 fF, but the absolute value is within ±20%. So that an external 1% capacitor is necessary to calibrate the Ctest capacitors. Nevertheless the dispersion between the 64 capacitors is within ±1% inside one chip
DAC dynamic range optimisation: Iref to be divided by 2. Add external 200k between pin 73 and V_BG. => slope 1.37 mV/DAC Unit, from 940mV to 2.34V
The Auto_Cali Signal is a bus signal and the line between Ctest and Auto_Cali should as short as possible
The Cali voltage pulse can inject from a signal generator or from a DAC on board.
Test Pin
These pad is used to solder a wire in case that there is less than 4 ASICs in one ASIC Chain
RTN is the ground of OC, it should be well grounded
The VDD_DISCRI is a mixed (Discriminator) power supply. It's better to supply analog power. In case of the noise form VDD_DISCRI, this pin should be well decoupled
The Pin 63 of HARDROC2B is HOLDB, which is used to hold signal. On MICROROC pin 63 is not connected. In this version, do not connect pin 63
vdd_pa PreAmp
vdd_dac DAC
vdd_bg BandGap
vdd_discri Discri
vdd2 Digital ASIC
vdd LVDS&Digital Glue
vdd_sc SlowControl
vdd_sh Shaper
SDHCal FEB
ASIC A2 -- Chip
Monday, January 29, 2018

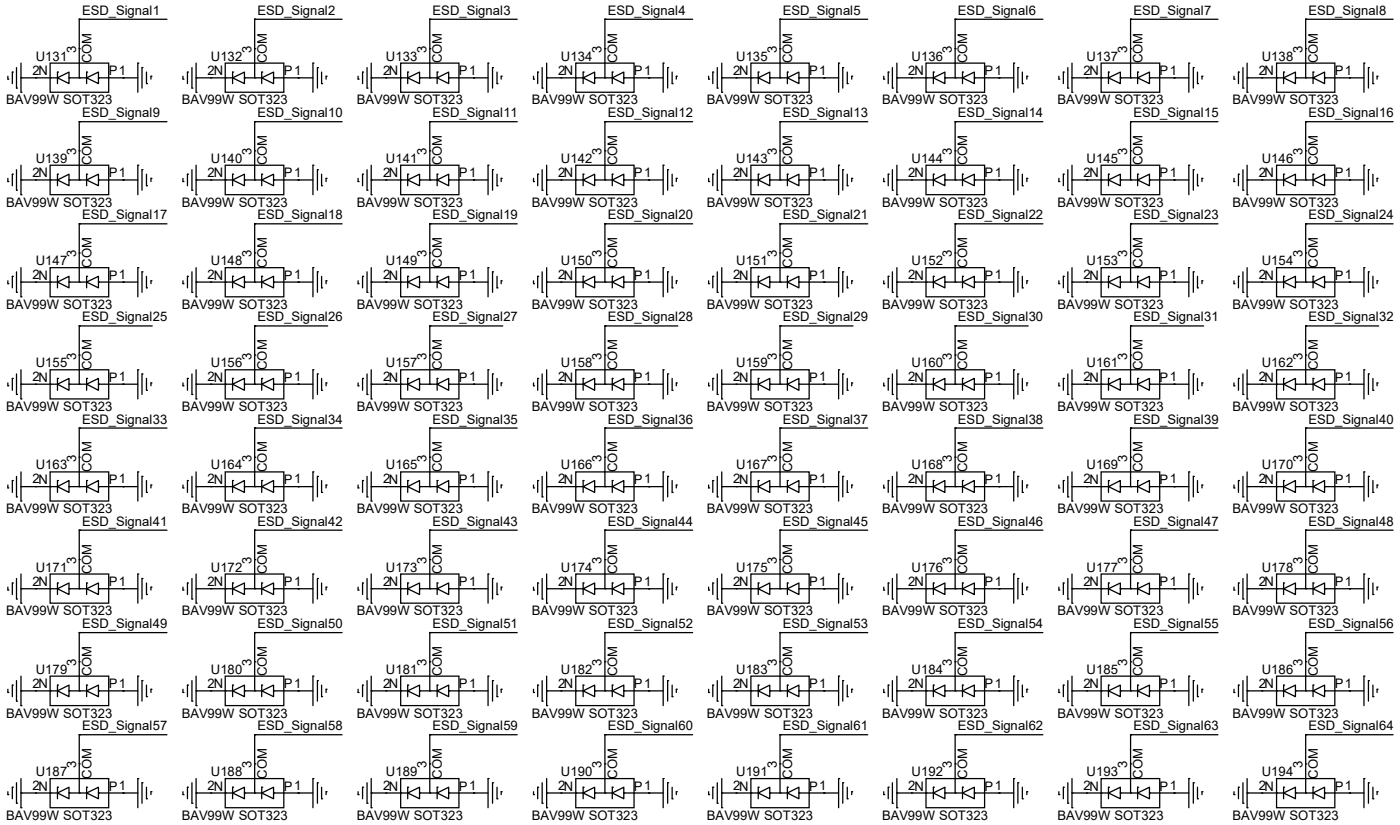

AnalogIn[1:64]
GEM_In[1:64]
AnalogIn[1:64]
GEM_In[1:64]

VCC3.3VA
VCC3.3VA
GND

GEM_In1	R168 100	ESD_Signal1	C175	10nF	AnalogIn1		
GEM_In5	R172 100	ESD_Signal5	C179	10nF	AnalogIn5		
GEM_In9	R176 100	ESD_Signal9	C183	10nF	AnalogIn9		
GEM_In13	R180 100	ESD_Signal13	C187	10nF	AnalogIn13		
GEM_In17	R184 100	ESD_Signal17	C191	10nF	AnalogIn17		
GEM_In21	R188 100	ESD_Signal21	C195	10nF	AnalogIn21		
GEM_In25	R192 100	ESD_Signal25	C199	10nF	AnalogIn25		
GEM_In29	R196 100	ESD_Signal29	C203	10nF	AnalogIn29		
GEM_In33	R200 100	ESD_Signal33	C207	10nF	AnalogIn33		
GEM_In37	R204 100	ESD_Signal37	C211	10nF	AnalogIn37		
GEM_In41	R208 100	ESD_Signal41	C215	10nF	AnalogIn41		
GEM_In45	R212 100	ESD_Signal45	C219	10nF	AnalogIn45		
GEM_In49	R216 100	ESD_Signal49	C223	10nF	AnalogIn49		
GEM_In53	R220 100	ESD_Signal53	C227	10nF	AnalogIn53		
GEM_In57	R224 100	ESD_Signal57	C231	10nF	AnalogIn57		
GEM_In61	R228 100	ESD_Signal61	C235	10nF	AnalogIn61		

GEM_In2	R169 100	ESD_Signal2	C176	10nF	AnalogIn2		
GEM_In6	R173 100	ESD_Signal6	C180	10nF	AnalogIn6		
GEM_In10	R177 100	ESD_Signal10	C184	10nF	AnalogIn10		
GEM_In14	R181 100	ESD_Signal14	C188	10nF	AnalogIn14		
GEM_In18	R185 100	ESD_Signal18	C192	10nF	AnalogIn18		
GEM_In22	R189 100	ESD_Signal22	C196	10nF	AnalogIn22		
GEM_In26	R193 100	ESD_Signal26	C200	10nF	AnalogIn26		
GEM_In30	R197 100	ESD_Signal30	C204	10nF	AnalogIn30		
GEM_In34	R201 100	ESD_Signal34	C208	10nF	AnalogIn34		
GEM_In38	R205 100	ESD_Signal38	C212	10nF	AnalogIn38		
GEM_In42	R209 100	ESD_Signal42	C216	10nF	AnalogIn42		
GEM_In46	R213 100	ESD_Signal46	C220	10nF	AnalogIn46		
GEM_In50	R217 100	ESD_Signal50	C224	10nF	AnalogIn50		
GEM_In54	R221 100	ESD_Signal54	C228	10nF	AnalogIn54		
GEM_In58	R225 100	ESD_Signal58	C232	10nF	AnalogIn58		
GEM_In62	R229 100	ESD_Signal62	C236	10nF	AnalogIn62		

GEM_In3	R170 100	ESD_Signal3	C177	10nF	AnalogIn3		
GEM_In7	R174 100	ESD_Signal7	C181	10nF	AnalogIn7		
GEM_In11	R178 100	ESD_Signal11	C185	10nF	AnalogIn11		
GEM_In15	R182 100	ESD_Signal15	C189	10nF	AnalogIn15		
GEM_In19	R186 100	ESD_Signal19	C193	10nF	AnalogIn19		
GEM_In23	R190 100	ESD_Signal23	C197	10nF	AnalogIn23		
GEM_In27	R194 100	ESD_Signal27	C201	10nF	AnalogIn27		
GEM_In31	R198 100	ESD_Signal31	C205	10nF	AnalogIn31		
GEM_In35	R202 100	ESD_Signal35	C209	10nF	AnalogIn35		
GEM_In39	R206 100	ESD_Signal39	C213	10nF	AnalogIn39		
GEM_In43	R210 100	ESD_Signal43	C217	10nF	AnalogIn43		
GEM_In47	R214 100	ESD_Signal47	C221	10nF	AnalogIn47		
GEM_In51	R218 100	ESD_Signal51	C225	10nF	AnalogIn51		
GEM_In55	R222 100	ESD_Signal55	C229	10nF	AnalogIn55		
GEM_In59	R226 100	ESD_Signal59	C233	10nF	AnalogIn59		
GEM_In63	R230 100	ESD_Signal63	C237	10nF	AnalogIn63		

GEM_In4	R171 100	ESD_Signal4	C178	10nF	AnalogIn4		
GEM_In8	R175 100	ESD_Signal8	C182	10nF	AnalogIn8		
GEM_In12	R179 100	ESD_Signal12	C186	10nF	AnalogIn12		
GEM_In16	R183 100	ESD_Signal16	C190	10nF	AnalogIn16		
GEM_In20	R187 100	ESD_Signal20	C194	10nF	AnalogIn20		
GEM_In24	R191 100	ESD_Signal24	C198	10nF	AnalogIn24		
GEM_In28	R195 100	ESD_Signal28	C202	10nF	AnalogIn28		
GEM_In32	R199 100	ESD_Signal32	C206	10nF	AnalogIn32		
GEM_In36	R203 100	ESD_Signal36	C210	10nF	AnalogIn36		
GEM_In40	R207 100	ESD_Signal40	C214	10nF	AnalogIn40		
GEM_In44	R211 100	ESD_Signal44	C218	10nF	AnalogIn44		
GEM_In48	R215 100	ESD_Signal48	C222	10nF	AnalogIn48		
GEM_In52	R219 100	ESD_Signal52	C226	10nF	AnalogIn52		
GEM_In56	R223 100	ESD_Signal56	C230	10nF	AnalogIn56		
GEM_In60	R227 100	ESD_Signal60	C234	10nF	AnalogIn60		
GEM_In64	R231 100	ESD_Signal64	C238	10nF	AnalogIn64		

Title	SDHCal FEB		
Size	Document Number		Rev
Custom	ASIC A3 -- Analog In		V1.0
Date:	Monday, January 29, 2018	Sheet 8 of 48	

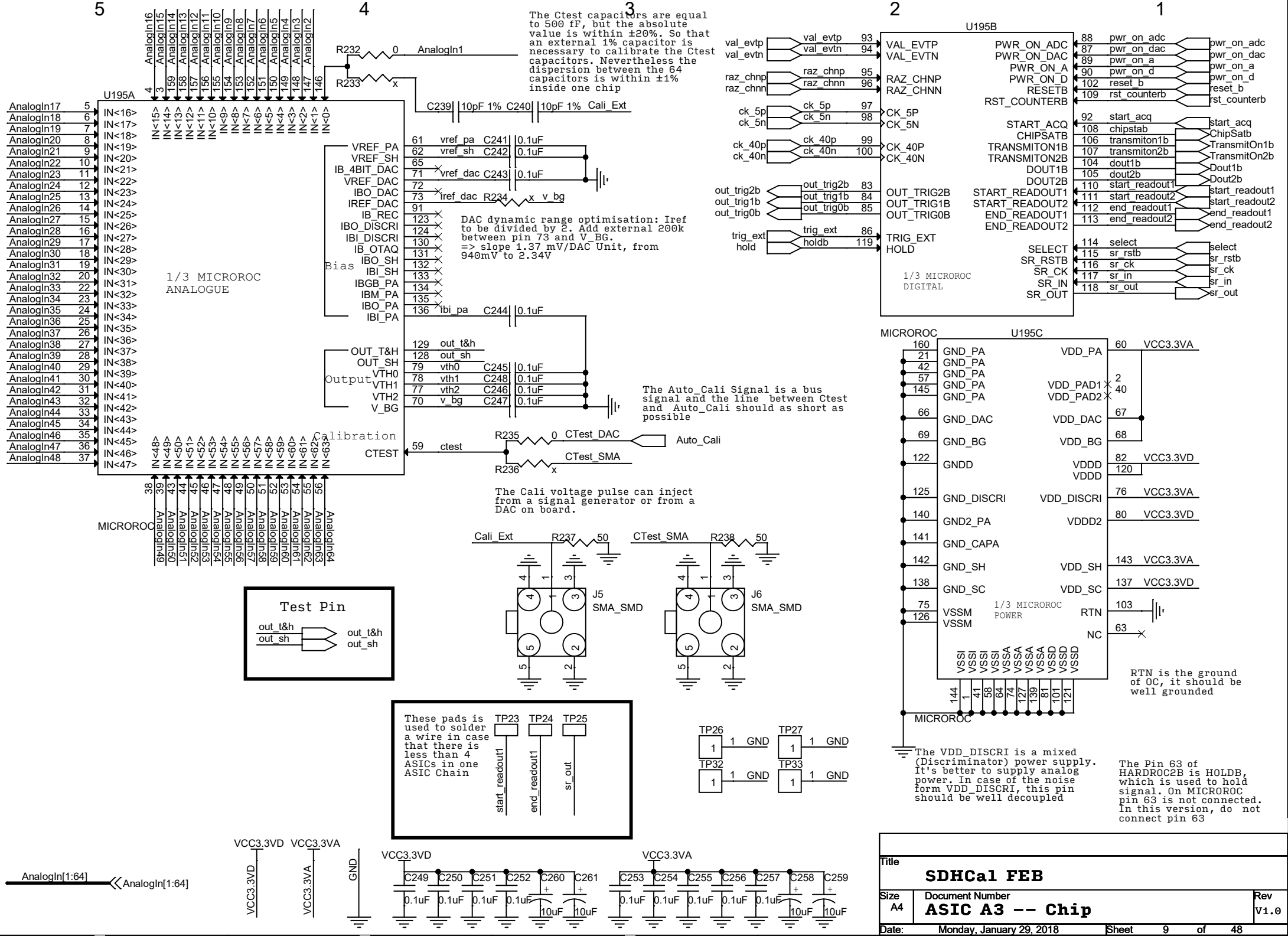
U195A
1/3 MICROROC ANALOGUE
Bias
Output
Calibration
MICROROC
U195B
1/3 MICROROC DIGITAL
U195C
1/3 MICROROC POWER
The Ctest capacitors are equal to 500 fF, but the absolute value is within ±20%. So that an external 1% capacitor is necessary to calibrate the Ctest capacitors. Nevertheless the dispersion between the 64 capacitors is within ±1% inside one chip
DAC dynamic range optimisation: Iref to be divided by 2. Add external 200k between pin 73 and V_BG. => slope 1.37 mV/DAC Unit, from 940mV to 2.34V
The Auto_Cali Signal is a bus signal and the line between Ctest and Auto_Cali should as short as possible
The Cali voltage pulse can inject from a signal generator or from a DAC on board.
Test Pin
These pads is used to solder a wire in case that there is less than 4 ASICs in one ASIC Chain
RTN is the ground of OC, it should be well grounded
The VDD_DISCRI is a mixed (Discriminator) power supply. It's better to supply analog power. In case of the noise form VDD_DISCRI, this pin should be well decoupled
The Pin 63 of HARDROC2B is HOLDB, which is used to hold signal. On MICROROC pin 63 is not connected. In this version, do not connect pin 63
SDHCal FEB
ASIC A3 -- Chip
Monday, January 29, 2018

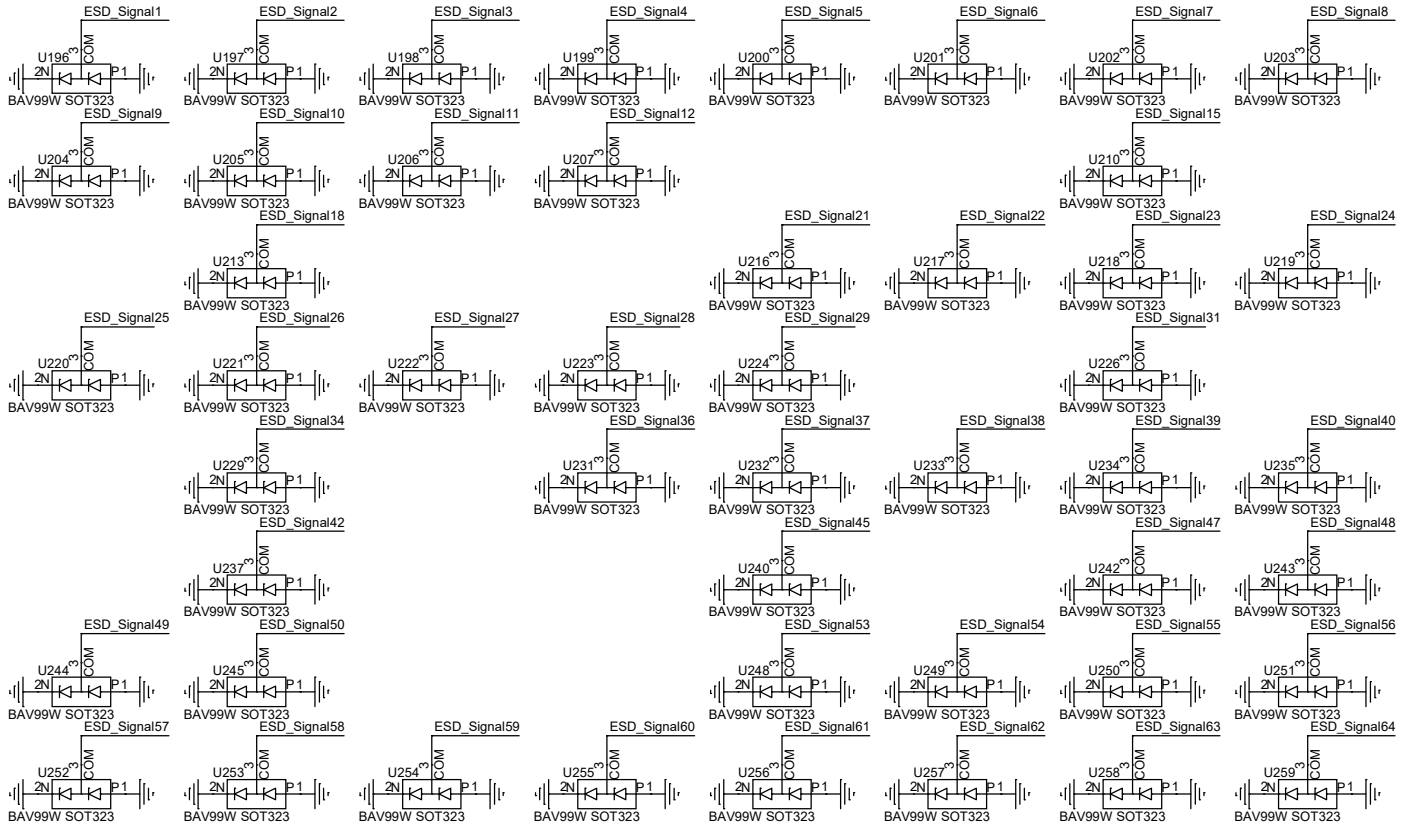

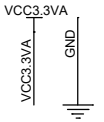

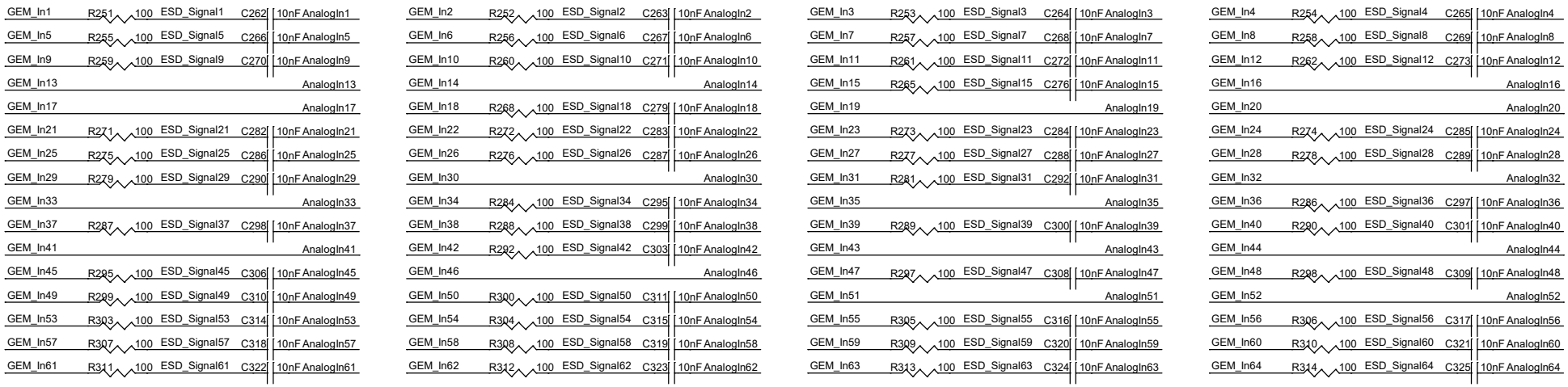

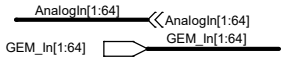

Title	SDHCal FEB	
Size: Custom	Document Number: ASIC A4 -- Analog In	Rev: V1.0
Date: Monday, January 29, 2018	Sheet 10 of 48	

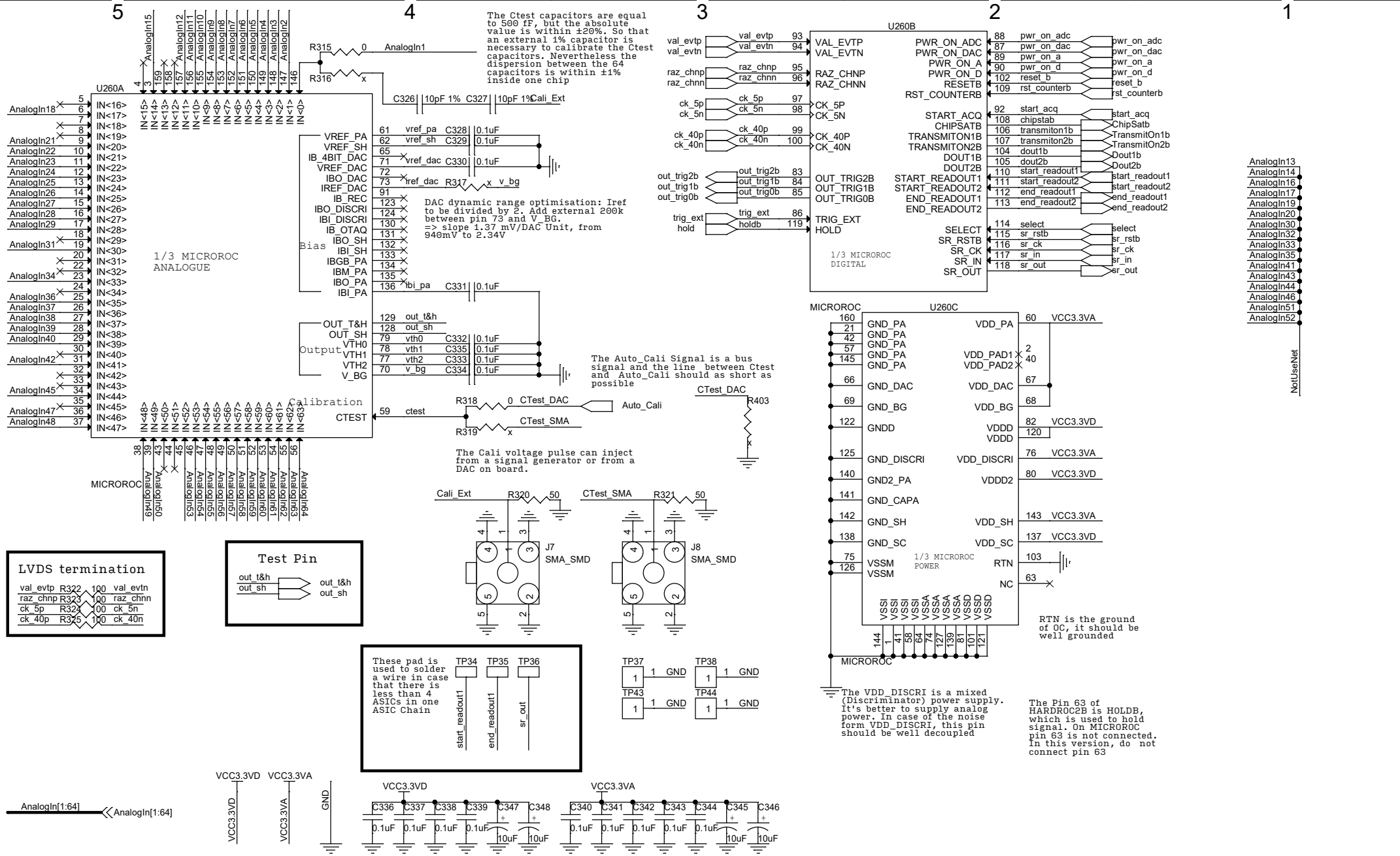

Title	SDHCal FEB
Size	Custom
Document Number	ASIC A4 -- Chip
Rev	V1.0
Date:	Monday, January 29, 2018
Sheet	11 of 48

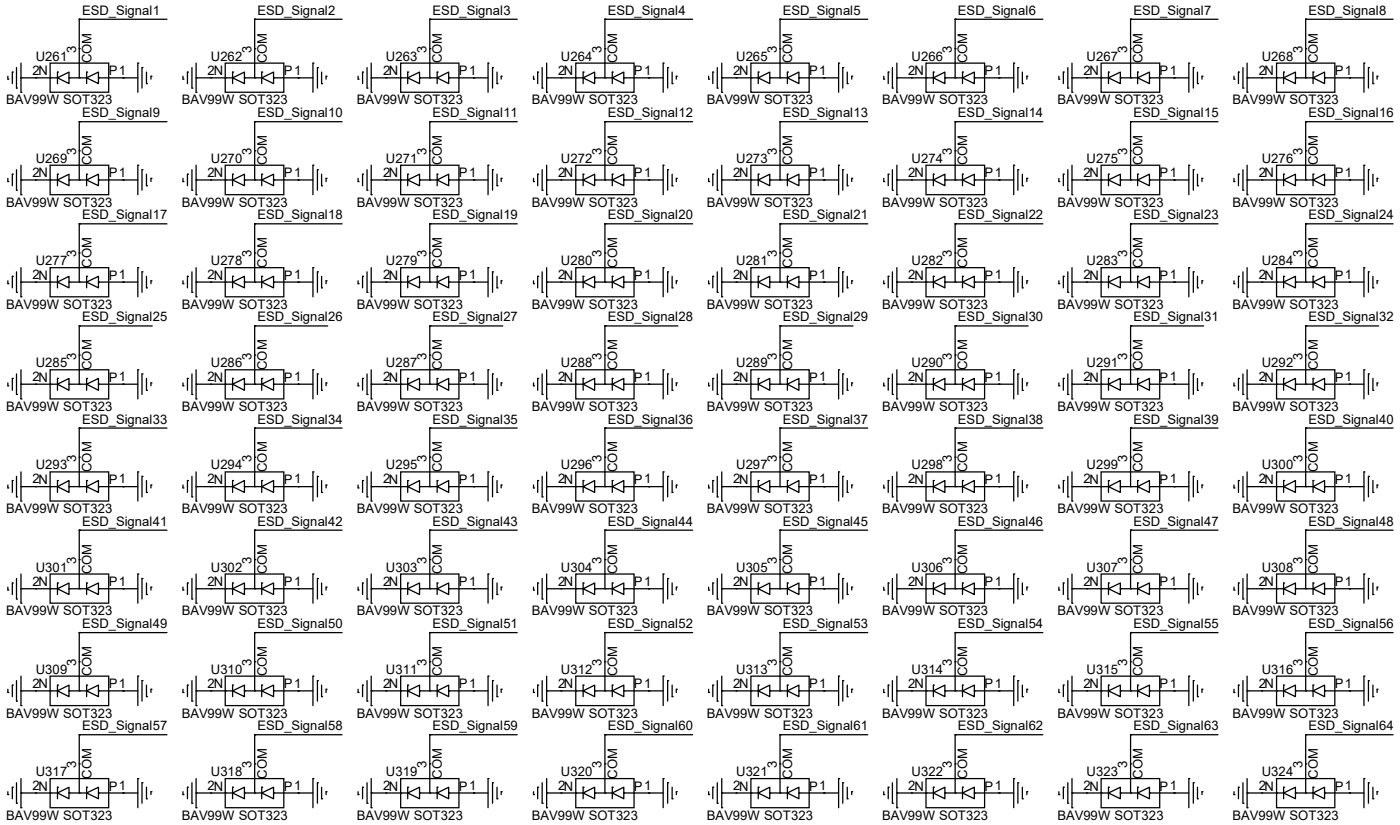

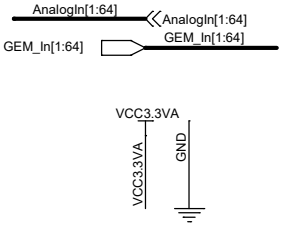

GEM_In1	R334	100	ESD_Signal1	C349	10nF AnalogIn1	GEM_In2	R335	100	ESD_Signal2	C350	10nF AnalogIn2
GEM_In5	R338	100	ESD_Signal5	C353	10nF AnalogIn5	GEM_In6	R339	100	ESD_Signal6	C354	10nF AnalogIn6
GEM_In9	R342	100	ESD_Signal9	C357	10nF AnalogIn9	GEM_In10	R343	100	ESD_Signal10	C358	10nF AnalogIn10
GEM_In13	R346	100	ESD_Signal13	C361	10nF AnalogIn13	GEM_In14	R347	100	ESD_Signal14	C362	10nF AnalogIn14
GEM_In17	R350	100	ESD_Signal17	C365	10nF AnalogIn17	GEM_In18	R351	100	ESD_Signal18	C366	10nF AnalogIn18
GEM_In21	R354	100	ESD_Signal21	C369	10nF AnalogIn21	GEM_In22	R355	100	ESD_Signal22	C370	10nF AnalogIn22
GEM_In25	R358	100	ESD_Signal25	C373	10nF AnalogIn25	GEM_In26	R359	100	ESD_Signal26	C374	10nF AnalogIn26
GEM_In29	R362	100	ESD_Signal29	C377	10nF AnalogIn29	GEM_In30	R363	100	ESD_Signal30	C378	10nF AnalogIn30
GEM_In33	R366	100	ESD_Signal33	C381	10nF AnalogIn33	GEM_In34	R367	100	ESD_Signal34	C382	10nF AnalogIn34
GEM_In37	R370	100	ESD_Signal37	C385	10nF AnalogIn37	GEM_In38	R371	100	ESD_Signal38	C386	10nF AnalogIn38
GEM_In41	R374	100	ESD_Signal41	C389	10nF AnalogIn41	GEM_In42	R375	100	ESD_Signal42	C390	10nF AnalogIn42
GEM_In45	R378	100	ESD_Signal45	C393	10nF AnalogIn45	GEM_In46	R379	100	ESD_Signal46	C394	10nF AnalogIn46
GEM_In49	R382	100	ESD_Signal49	C397	10nF AnalogIn49	GEM_In50	R383	100	ESD_Signal50	C398	10nF AnalogIn50
GEM_In53	R386	100	ESD_Signal53	C401	10nF AnalogIn53	GEM_In54	R387	100	ESD_Signal54	C402	10nF AnalogIn54
GEM_In57	R390	100	ESD_Signal57	C405	10nF AnalogIn57	GEM_In58	R391	100	ESD_Signal58	C406	10nF AnalogIn58
GEM_In61	R394	100	ESD_Signal61	C409	10nF AnalogIn61	GEM_In62	R395	100	ESD_Signal62	C410	10nF AnalogIn62

GEM_In3	R336	100	ESD_Signal3	C351	10nF AnalogIn3	GEM_In4	R337	100	ESD_Signal4	C352	10nF AnalogIn4
GEM_In7	R340	100	ESD_Signal7	C355	10nF AnalogIn7	GEM_In8	R341	100	ESD_Signal8	C356	10nF AnalogIn8
GEM_In11	R344	100	ESD_Signal11	C359	10nF AnalogIn11	GEM_In12	R345	100	ESD_Signal12	C360	10nF AnalogIn12
GEM_In15	R348	100	ESD_Signal15	C363	10nF AnalogIn15	GEM_In16	R349	100	ESD_Signal16	C364	10nF AnalogIn16
GEM_In19	R352	100	ESD_Signal19	C367	10nF AnalogIn19	GEM_In20	R353	100	ESD_Signal20	C368	10nF AnalogIn20
GEM_In23	R356	100	ESD_Signal23	C371	10nF AnalogIn23	GEM_In24	R357	100	ESD_Signal24	C372	10nF AnalogIn24
GEM_In27	R360	100	ESD_Signal27	C375	10nF AnalogIn27	GEM_In28	R361	100	ESD_Signal28	C376	10nF AnalogIn28
GEM_In31	R364	100	ESD_Signal31	C379	10nF AnalogIn31	GEM_In32	R365	100	ESD_Signal32	C380	10nF AnalogIn32
GEM_In35	R368	100	ESD_Signal35	C383	10nF AnalogIn35	GEM_In36	R369	100	ESD_Signal36	C384	10nF AnalogIn36
GEM_In39	R372	100	ESD_Signal39	C387	10nF AnalogIn39	GEM_In40	R373	100	ESD_Signal40	C388	10nF AnalogIn40
GEM_In43	R376	100	ESD_Signal43	C391	10nF AnalogIn43	GEM_In44	R377	100	ESD_Signal44	C392	10nF AnalogIn44
GEM_In47	R380	100	ESD_Signal47	C395	10nF AnalogIn47	GEM_In48	R381	100	ESD_Signal48	C396	10nF AnalogIn48
GEM_In51	R384	100	ESD_Signal51	C399	10nF AnalogIn51	GEM_In52	R385	100	ESD_Signal52	C400	10nF AnalogIn52
GEM_In55	R388	100	ESD_Signal55	C403	10nF AnalogIn55	GEM_In56	R389	100	ESD_Signal56	C404	10nF AnalogIn56
GEM_In59	R392	100	ESD_Signal59	C407	10nF AnalogIn59	GEM_In60	R393	100	ESD_Signal60	C408	10nF AnalogIn60
GEM_In63	R396	100	ESD_Signal63	C411	10nF AnalogIn63	GEM_In64	R397	100	ESD_Signal64	C412	10nF AnalogIn64

Title	SDHCal FEB	
Size: Custom	Document Number: ASIC B1 -- Analog In	Rev: V1.0
Date: Monday, January 29, 2018	Sheet 12 of 48	

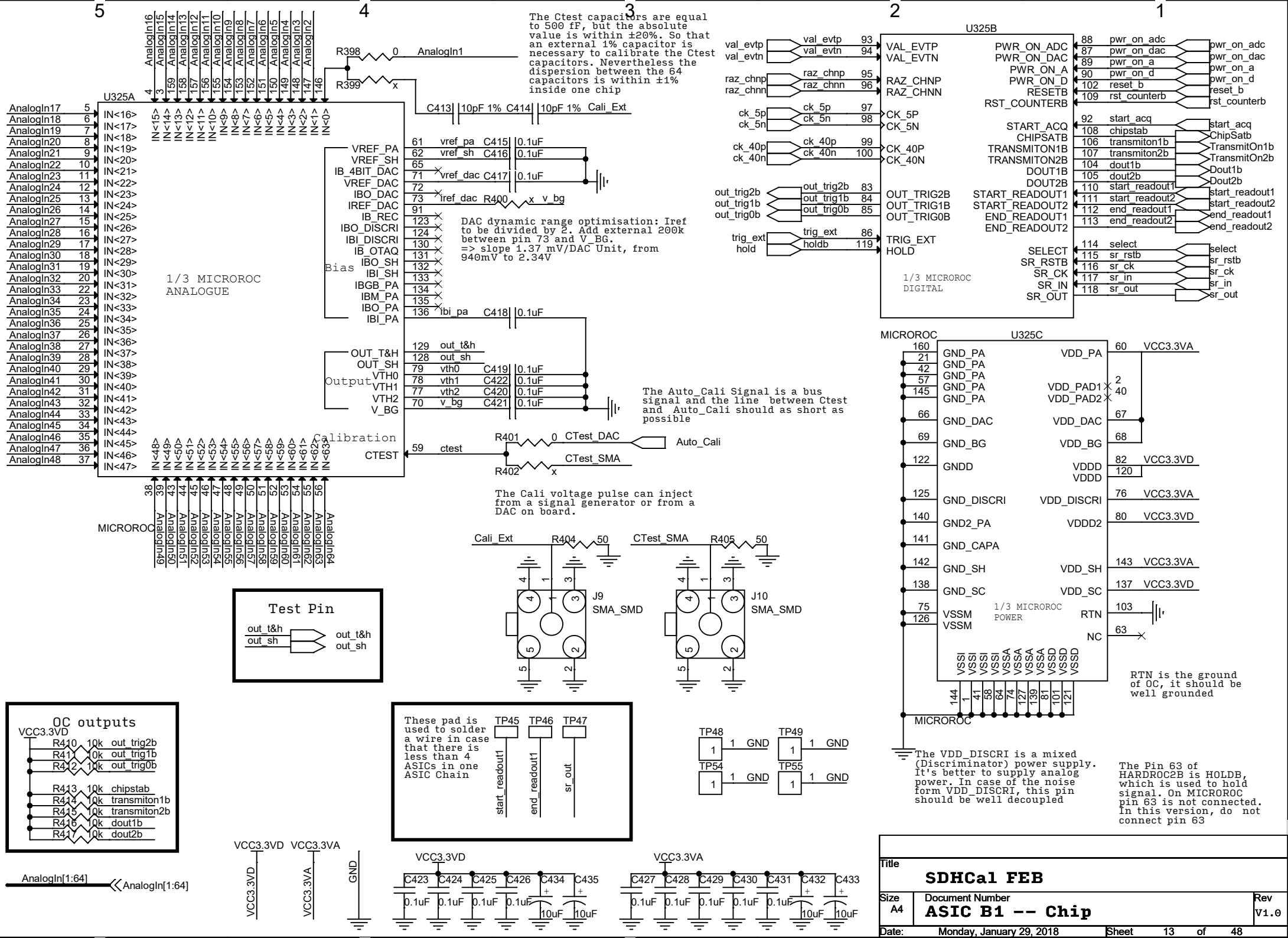
U325A
1/3 MICROROC ANALOGUE
Bias
Output
Calibration
MICROROC
The Ctest capacitors are equal to 500 fF, but the absolute value is within ±20%. So that an external 1% capacitor is necessary to calibrate the Ctest capacitors. Nevertheless the dispersion between the 64 capacitors is within ±1% inside one chip
DAC dynamic range optimisation: Iref to be divided by 2. Add external 200k between pin 73 and V_BG. => slope 1.37 mV/DAC Unit, from 940mV to 2.34V
The Auto_Cali Signal is a bus signal and the line between Ctest and Auto_Cali should as short as possible
The Cali voltage pulse can inject from a signal generator or from a DAC on board.
U325B
1/3 MICROROC DIGITAL
U325C
MICROROC
1/3 MICROROC POWER
RTN is the ground of OC, it should be well grounded
The VDD_DISCRI is a mixed (Discriminator) power supply. It's better to supply analog power. In case of the noise form VDD_DISCRI, this pin should be well decoupled
The Pin 63 of HARDROC2B is HOLDB, which is used to hold signal. On MICROROC pin 63 is not connected. In this version, do not connect pin 63
Test Pin
OC outputs
These pad is used to solder a wire in case that there is less than 4 ASICs in one ASIC Chain
SMA_SMD
Title
SDHCal FEB
Size A4
Document Number
ASIC B1 -- Chip
Rev V1.0
Date: Monday, January 29, 2018
Sheet 13 of 48

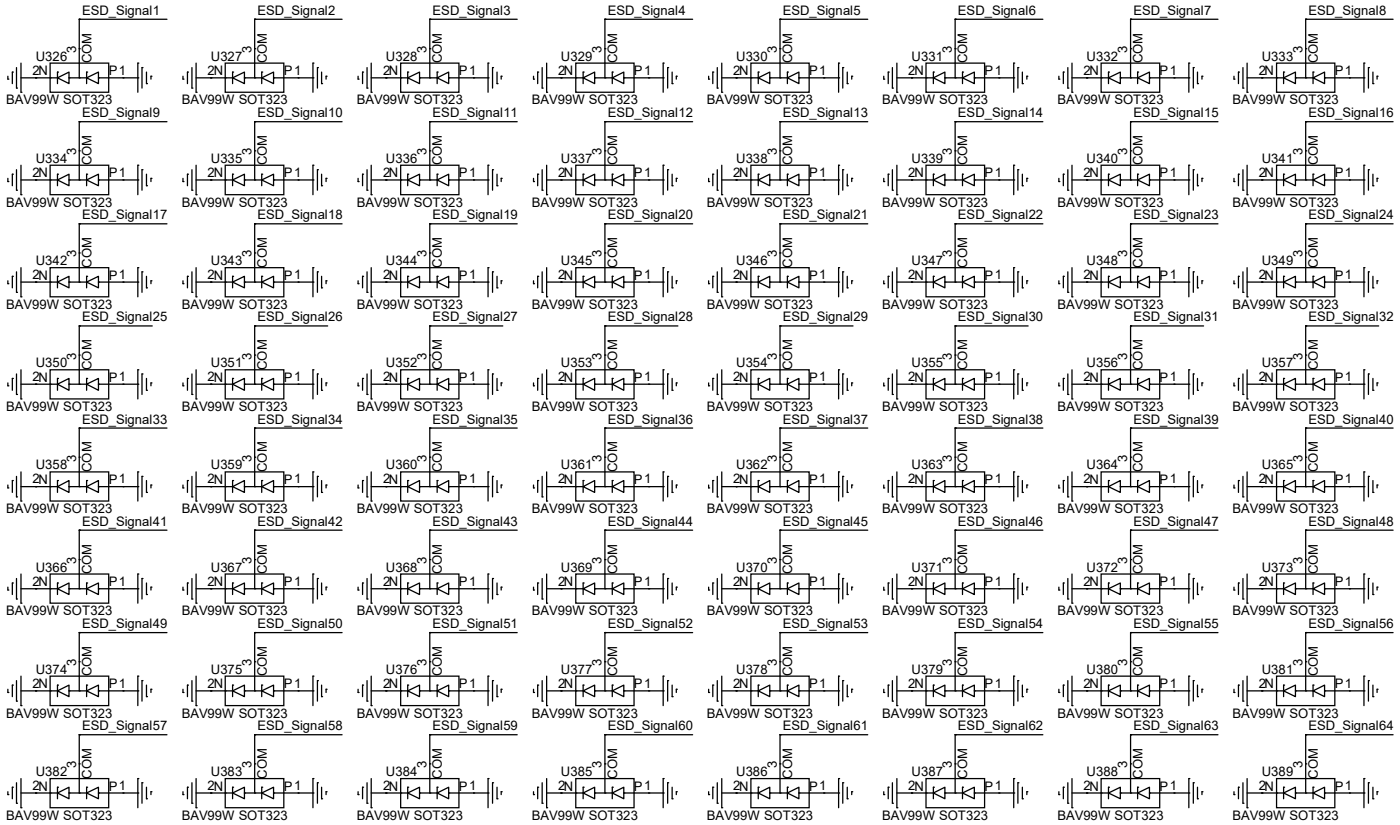

AnalogIn[1:64] AnalogIn[1:64]
GEM_In[1:64] GEM_In[1:64]

VCC3.3VA
VCC3.3VA GND

GEM_In1	R418	100	ESD_Signal1	C436	10nF	AnalogIn1	
GEM_In5	R422	100	ESD_Signal5	C440	10nF	AnalogIn5	
GEM_In9	R426	100	ESD_Signal9	C444	10nF	AnalogIn9	
GEM_In13	R430	100	ESD_Signal13	C448	10nF	AnalogIn13	
GEM_In17	R434	100	ESD_Signal17	C452	10nF	AnalogIn17	
GEM_In21	R438	100	ESD_Signal21	C456	10nF	AnalogIn21	
GEM_In25	R442	100	ESD_Signal25	C460	10nF	AnalogIn25	
GEM_In29	R446	100	ESD_Signal29	C464	10nF	AnalogIn29	
GEM_In33	R450	100	ESD_Signal33	C468	10nF	AnalogIn33	
GEM_In37	R454	100	ESD_Signal37	C472	10nF	AnalogIn37	
GEM_In41	R458	100	ESD_Signal41	C476	10nF	AnalogIn41	
GEM_In45	R462	100	ESD_Signal45	C480	10nF	AnalogIn45	
GEM_In49	R466	100	ESD_Signal49	C484	10nF	AnalogIn49	
GEM_In53	R470	100	ESD_Signal53	C488	10nF	AnalogIn53	
GEM_In57	R474	100	ESD_Signal57	C492	10nF	AnalogIn57	
GEM_In61	R478	100	ESD_Signal61	C496	10nF	AnalogIn61	

GEM_In2	R419	100	ESD_Signal2	C437	10nF	AnalogIn2	
GEM_In6	R423	100	ESD_Signal6	C441	10nF	AnalogIn6	
GEM_In10	R427	100	ESD_Signal10	C445	10nF	AnalogIn10	
GEM_In14	R431	100	ESD_Signal14	C449	10nF	AnalogIn14	
GEM_In18	R435	100	ESD_Signal18	C453	10nF	AnalogIn18	
GEM_In22	R439	100	ESD_Signal22	C457	10nF	AnalogIn22	
GEM_In26	R443	100	ESD_Signal26	C461	10nF	AnalogIn26	
GEM_In30	R447	100	ESD_Signal30	C465	10nF	AnalogIn30	
GEM_In34	R451	100	ESD_Signal34	C469	10nF	AnalogIn34	
GEM_In38	R455	100	ESD_Signal38	C473	10nF	AnalogIn38	
GEM_In42	R459	100	ESD_Signal42	C477	10nF	AnalogIn42	
GEM_In46	R463	100	ESD_Signal46	C481	10nF	AnalogIn46	
GEM_In50	R467	100	ESD_Signal50	C485	10nF	AnalogIn50	
GEM_In54	R471	100	ESD_Signal54	C489	10nF	AnalogIn54	
GEM_In58	R475	100	ESD_Signal58	C493	10nF	AnalogIn58	
GEM_In62	R479	100	ESD_Signal62	C497	10nF	AnalogIn62	

GEM_In3	R420	100	ESD_Signal3	C438	10nF	AnalogIn3	
GEM_In7	R424	100	ESD_Signal7	C442	10nF	AnalogIn7	
GEM_In11	R428	100	ESD_Signal11	C446	10nF	AnalogIn11	
GEM_In15	R432	100	ESD_Signal15	C450	10nF	AnalogIn15	
GEM_In19	R436	100	ESD_Signal19	C454	10nF	AnalogIn19	
GEM_In23	R440	100	ESD_Signal23	C458	10nF	AnalogIn23	
GEM_In27	R444	100	ESD_Signal27	C462	10nF	AnalogIn27	
GEM_In31	R448	100	ESD_Signal31	C466	10nF	AnalogIn31	
GEM_In35	R452	100	ESD_Signal35	C470	10nF	AnalogIn35	
GEM_In39	R456	100	ESD_Signal39	C474	10nF	AnalogIn39	
GEM_In43	R460	100	ESD_Signal43	C478	10nF	AnalogIn43	
GEM_In47	R464	100	ESD_Signal47	C482	10nF	AnalogIn47	
GEM_In51	R468	100	ESD_Signal51	C486	10nF	AnalogIn51	
GEM_In55	R472	100	ESD_Signal55	C490	10nF	AnalogIn55	
GEM_In59	R476	100	ESD_Signal59	C494	10nF	AnalogIn59	
GEM_In63	R480	100	ESD_Signal63	C498	10nF	AnalogIn63	

GEM_In4	R421	100	ESD_Signal4	C439	10nF	AnalogIn4	
GEM_In8	R425	100	ESD_Signal8	C443	10nF	AnalogIn8	
GEM_In12	R429	100	ESD_Signal12	C447	10nF	AnalogIn12	
GEM_In16	R433	100	ESD_Signal16	C451	10nF	AnalogIn16	
GEM_In20	R437	100	ESD_Signal20	C455	10nF	AnalogIn20	
GEM_In24	R441	100	ESD_Signal24	C459	10nF	AnalogIn24	
GEM_In28	R445	100	ESD_Signal28	C463	10nF	AnalogIn28	
GEM_In32	R449	100	ESD_Signal32	C467	10nF	AnalogIn32	
GEM_In36	R453	100	ESD_Signal36	C471	10nF	AnalogIn36	
GEM_In40	R457	100	ESD_Signal40	C475	10nF	AnalogIn40	
GEM_In44	R461	100	ESD_Signal44	C479	10nF	AnalogIn44	
GEM_In48	R465	100	ESD_Signal48	C483	10nF	AnalogIn48	
GEM_In52	R469	100	ESD_Signal52	C487	10nF	AnalogIn52	
GEM_In56	R473	100	ESD_Signal56	C491	10nF	AnalogIn56	
GEM_In60	R477	100	ESD_Signal60	C495	10nF	AnalogIn60	
GEM_In64	R481	100	ESD_Signal64	C499	10nF	AnalogIn64	

Title	SDHCal FEB		
Size: Custom	Document Number: ASIC B2 -- Analog In		Rev: V1.0
Date: Monday, January 29, 2018	Sheet 14 of 48		

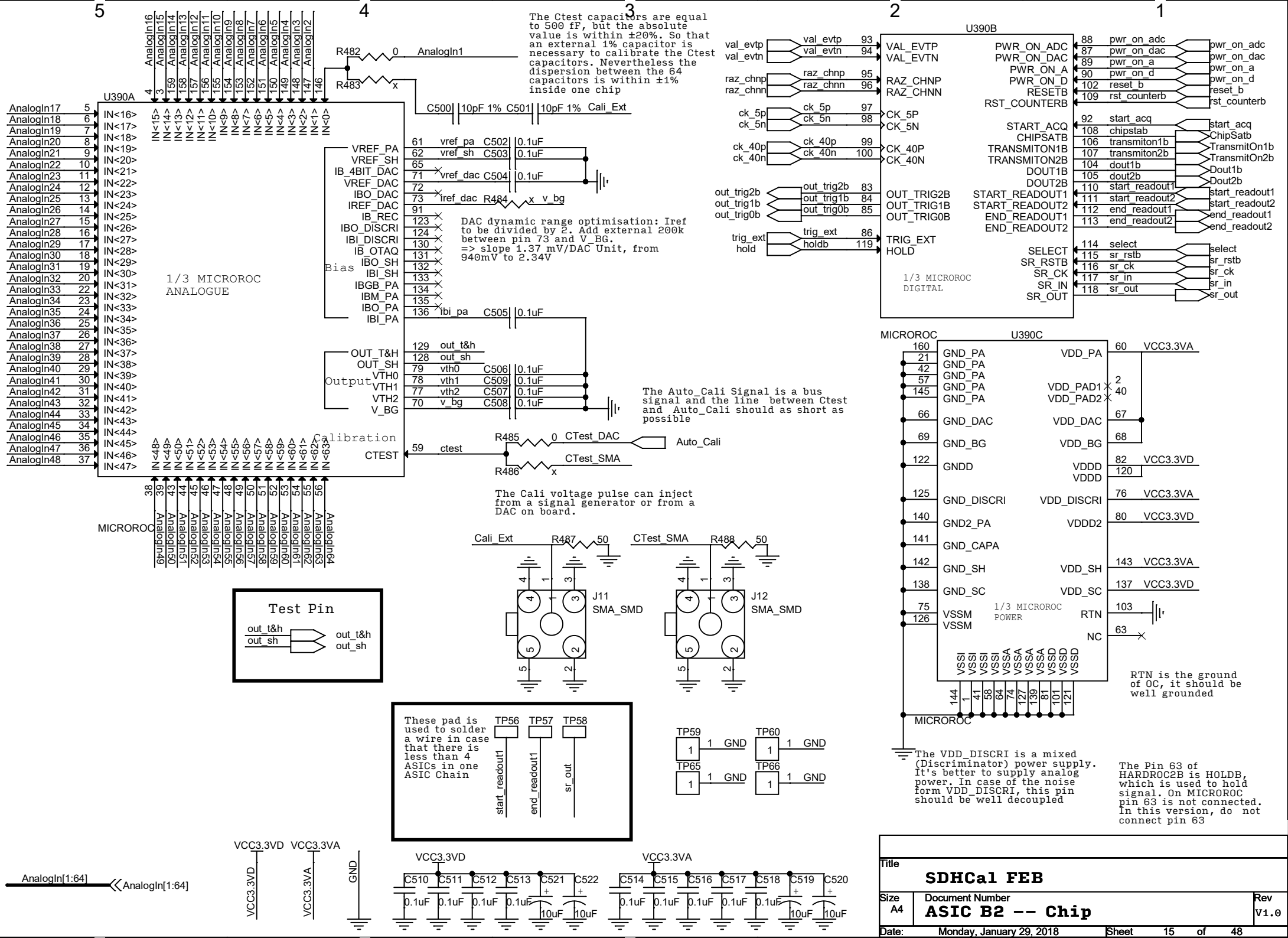
U390A
1/3 MICROROC ANALOGUE
Bias
Output
Calibration
MICROROC
U390B
1/3 MICROROC DIGITAL
U390C
1/3 MICROROC POWER
MICROROC
The Ctest capacitors are equal to 500 fF, but the absolute value is within ±20%. So that an external 1% capacitor is necessary to calibrate the Ctest capacitors. Nevertheless the dispersion between the 64 capacitors is within ±1% inside one chip
DAC dynamic range optimisation: Iref to be divided by 2. Add external 200k between pin 73 and V_BG. => slope 1.37 mV/DAC Unit, from 940mV to 2.34V
The Auto_Cali Signal is a bus signal and the line between Ctest and Auto_Cali should as short as possible
The Cali voltage pulse can inject from a signal generator or from a DAC on board.
Test Pin
These pad is used to solder a wire in case that there is less than 4 ASICs in one ASIC Chain
RTN is the ground of OC, it should be well grounded
The VDD_DISCRI is a mixed (Discriminator) power supply. It's better to supply analog power. In case of the noise form VDD_DISCRI, this pin should be well decoupled
The Pin 63 of HARDROC2B is HOLDB, which is used to hold signal. On MICROROC pin 63 is not connected. In this version, do not connect pin 63
SDHCal FEB
ASIC B2 -- Chip
Monday, January 29, 2018

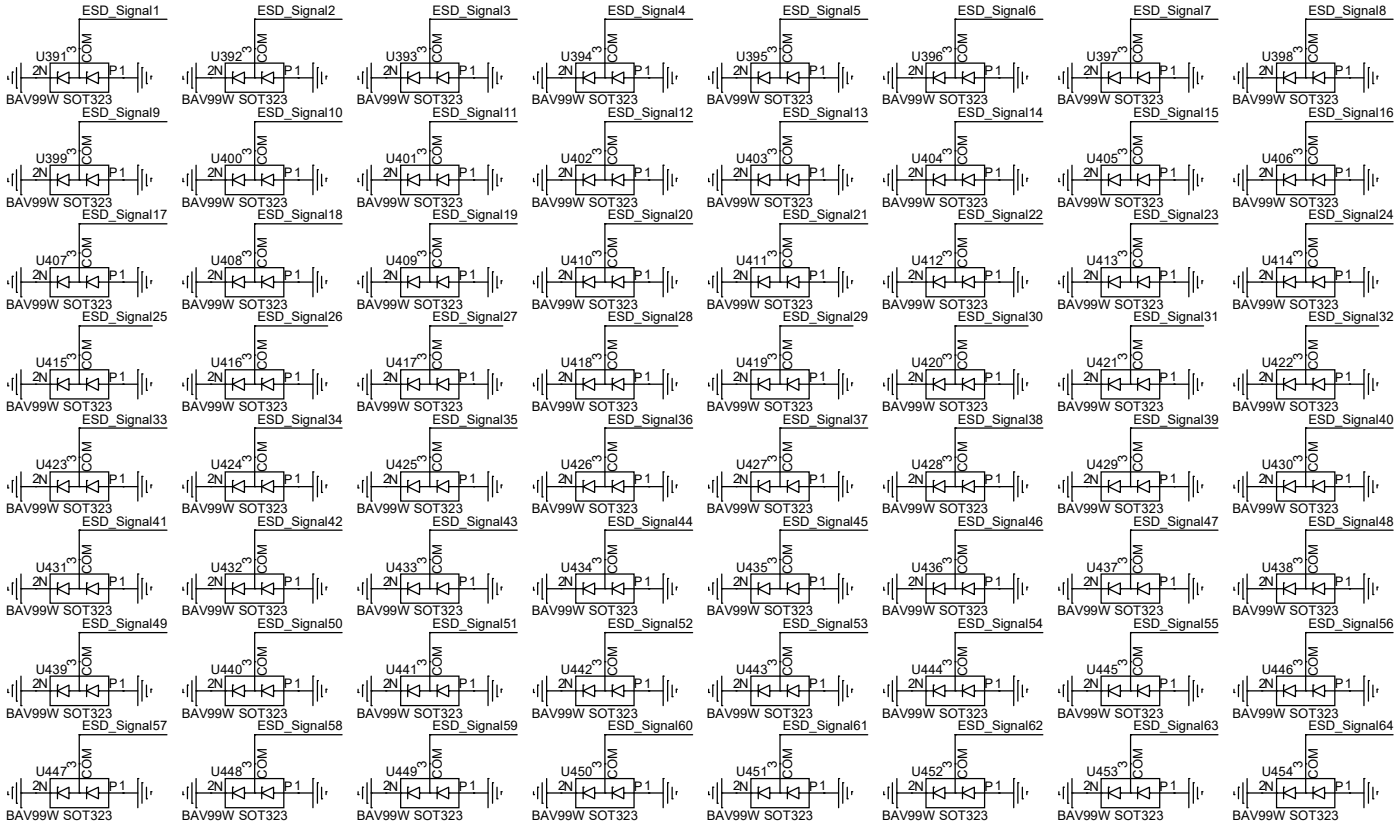

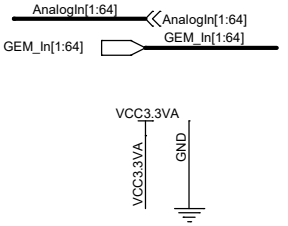

GEM_In1	R501 100	ESD_Signal1	C523 10nF	AnalogIn1	GEM_In2	R502 100	ESD_Signal2	C524 10nF	AnalogIn2
GEM_In5	R505 100	ESD_Signal5	C527 10nF	AnalogIn5	GEM_In6	R506 100	ESD_Signal6	C528 10nF	AnalogIn6
GEM_In9	R509 100	ESD_Signal9	C531 10nF	AnalogIn9	GEM_In10	R510 100	ESD_Signal10	C532 10nF	AnalogIn10
GEM_In13	R513 100	ESD_Signal13	C535 10nF	AnalogIn13	GEM_In14	R514 100	ESD_Signal14	C536 10nF	AnalogIn14
GEM_In17	R517 100	ESD_Signal17	C539 10nF	AnalogIn17	GEM_In18	R518 100	ESD_Signal18	C540 10nF	AnalogIn18
GEM_In21	R521 100	ESD_Signal21	C543 10nF	AnalogIn21	GEM_In22	R522 100	ESD_Signal22	C544 10nF	AnalogIn22
GEM_In25	R525 100	ESD_Signal25	C547 10nF	AnalogIn25	GEM_In26	R526 100	ESD_Signal26	C548 10nF	AnalogIn26
GEM_In29	R529 100	ESD_Signal29	C551 10nF	AnalogIn29	GEM_In30	R530 100	ESD_Signal30	C552 10nF	AnalogIn30
GEM_In33	R533 100	ESD_Signal33	C555 10nF	AnalogIn33	GEM_In34	R534 100	ESD_Signal34	C556 10nF	AnalogIn34
GEM_In37	R537 100	ESD_Signal37	C559 10nF	AnalogIn37	GEM_In38	R538 100	ESD_Signal38	C560 10nF	AnalogIn38
GEM_In41	R541 100	ESD_Signal41	C563 10nF	AnalogIn41	GEM_In42	R542 100	ESD_Signal42	C564 10nF	AnalogIn42
GEM_In45	R545 100	ESD_Signal45	C567 10nF	AnalogIn45	GEM_In46	R546 100	ESD_Signal46	C568 10nF	AnalogIn46
GEM_In49	R549 100	ESD_Signal49	C571 10nF	AnalogIn49	GEM_In50	R550 100	ESD_Signal50	C572 10nF	AnalogIn50
GEM_In53	R553 100	ESD_Signal53	C575 10nF	AnalogIn53	GEM_In54	R554 100	ESD_Signal54	C576 10nF	AnalogIn54
GEM_In57	R557 100	ESD_Signal57	C579 10nF	AnalogIn57	GEM_In58	R558 100	ESD_Signal58	C580 10nF	AnalogIn58
GEM_In61	R561 100	ESD_Signal61	C583 10nF	AnalogIn61	GEM_In62	R562 100	ESD_Signal62	C584 10nF	AnalogIn62

GEM_In3	R503 100	ESD_Signal3	C525 10nF	AnalogIn3	GEM_In4	R504 100	ESD_Signal4	C526 10nF	AnalogIn4
GEM_In7	R507 100	ESD_Signal7	C529 10nF	AnalogIn7	GEM_In8	R508 100	ESD_Signal8	C530 10nF	AnalogIn8
GEM_In11	R511 100	ESD_Signal11	C533 10nF	AnalogIn11	GEM_In12	R512 100	ESD_Signal12	C534 10nF	AnalogIn12
GEM_In15	R515 100	ESD_Signal15	C537 10nF	AnalogIn15	GEM_In16	R516 100	ESD_Signal16	C538 10nF	AnalogIn16
GEM_In19	R519 100	ESD_Signal19	C541 10nF	AnalogIn19	GEM_In20	R520 100	ESD_Signal20	C542 10nF	AnalogIn20
GEM_In23	R523 100	ESD_Signal23	C545 10nF	AnalogIn23	GEM_In24	R524 100	ESD_Signal24	C546 10nF	AnalogIn24
GEM_In27	R527 100	ESD_Signal27	C549 10nF	AnalogIn27	GEM_In28	R528 100	ESD_Signal28	C550 10nF	AnalogIn28
GEM_In31	R531 100	ESD_Signal31	C553 10nF	AnalogIn31	GEM_In32	R532 100	ESD_Signal32	C554 10nF	AnalogIn32
GEM_In35	R535 100	ESD_Signal35	C557 10nF	AnalogIn35	GEM_In36	R536 100	ESD_Signal36	C558 10nF	AnalogIn36
GEM_In39	R539 100	ESD_Signal39	C561 10nF	AnalogIn39	GEM_In40	R540 100	ESD_Signal40	C562 10nF	AnalogIn40
GEM_In43	R543 100	ESD_Signal43	C565 10nF	AnalogIn43	GEM_In44	R544 100	ESD_Signal44	C566 10nF	AnalogIn44
GEM_In47	R547 100	ESD_Signal47	C569 10nF	AnalogIn47	GEM_In48	R548 100	ESD_Signal48	C570 10nF	AnalogIn48
GEM_In51	R551 100	ESD_Signal51	C573 10nF	AnalogIn51	GEM_In52	R552 100	ESD_Signal52	C574 10nF	AnalogIn52
GEM_In55	R555 100	ESD_Signal55	C577 10nF	AnalogIn55	GEM_In56	R556 100	ESD_Signal56	C578 10nF	AnalogIn56
GEM_In59	R559 100	ESD_Signal59	C581 10nF	AnalogIn59	GEM_In60	R560 100	ESD_Signal60	C582 10nF	AnalogIn60
GEM_In63	R563 100	ESD_Signal63	C585 10nF	AnalogIn63	GEM_In64	R564 100	ESD_Signal64	C586 10nF	AnalogIn64

Title	SDHCal FEB		
Size: Custom	Document Number: ASIC B3 -- Analog In		Rev: V1.0
Date: Monday, January 29, 2018	Sheet 16 of 48		

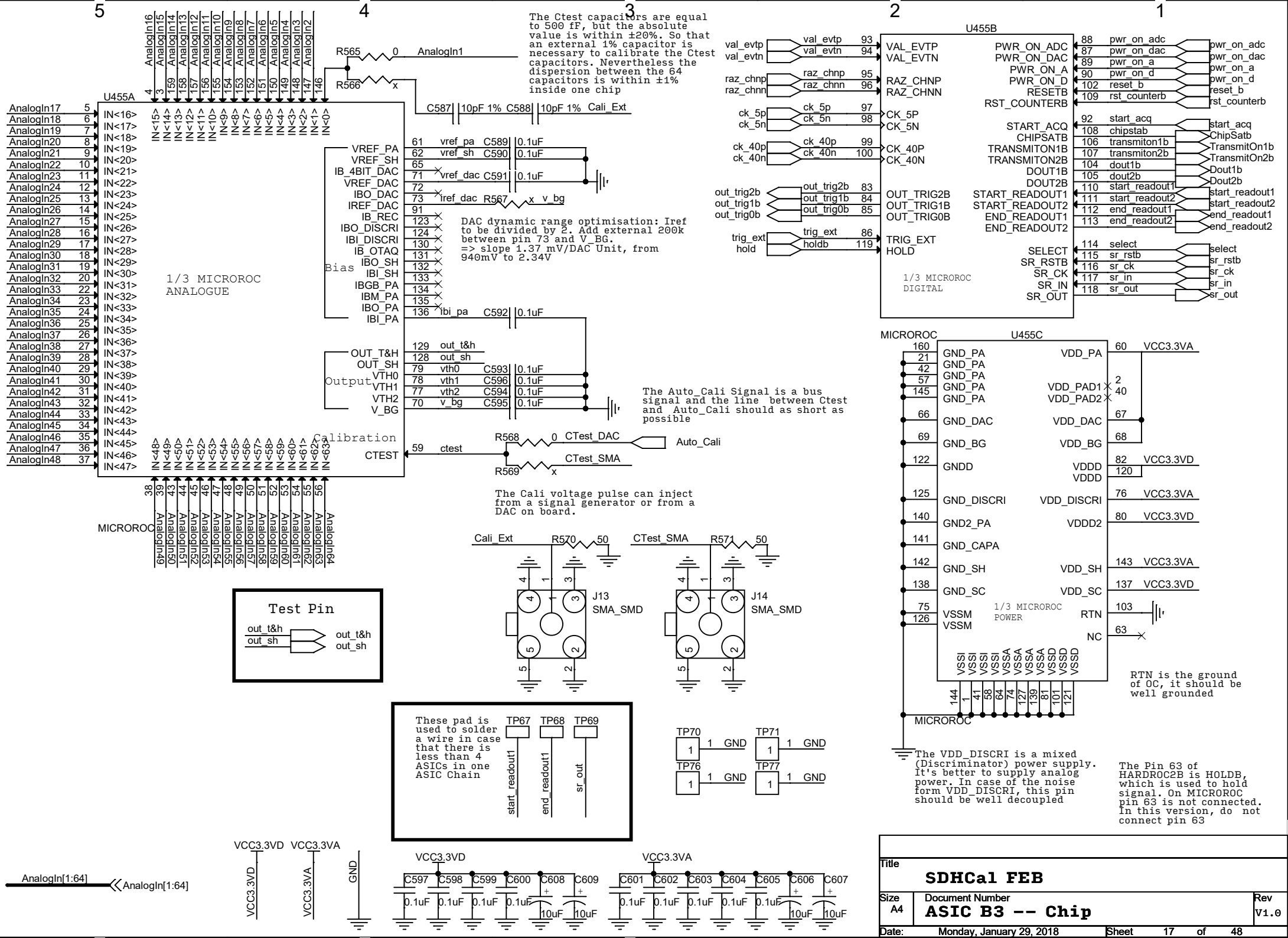
U455A
1/3 MICROROC ANALOGUE
Bias
Output
Calibration
MICROROC
The Ctest capacitors are equal to 500 fF, but the absolute value is within ±20%. So that an external 1% capacitor is necessary to calibrate the Ctest capacitors. Nevertheless the dispersion between the 64 capacitors is within ±1% inside one chip
DAC dynamic range optimisation: Iref to be divided by 2. Add external 200k between pin 73 and V_BG. => slope 1.37 mV/DAC Unit, from 940mV to 2.34V
The Auto_Cali Signal is a bus signal and the line between Ctest and Auto_Cali should as short as possible
The Cali voltage pulse can inject from a signal generator or from a DAC on board.
Test Pin
U455B
1/3 MICROROC DIGITAL
U455C
MICROROC
1/3 MICROROC POWER
RTN is the ground of OC, it should be well grounded
The VDD_DISCRI is a mixed (Discriminator) power supply. It's better to supply analog power. In case of the noise form VDD_DISCRI, this pin should be well decoupled
The Pin 63 of HARDROC2B is HOLDB, which is used to hold signal. On MICROROC pin 63 is not connected. In this version, do not connect pin 63
These pad is used to solder a wire in case that there is less than 4 ASICs in one ASIC Chain
SMA_SMD
AnalogIn[1:64]
SDHCal FEB
ASIC B3 -- Chip
Monday, January 29, 2018

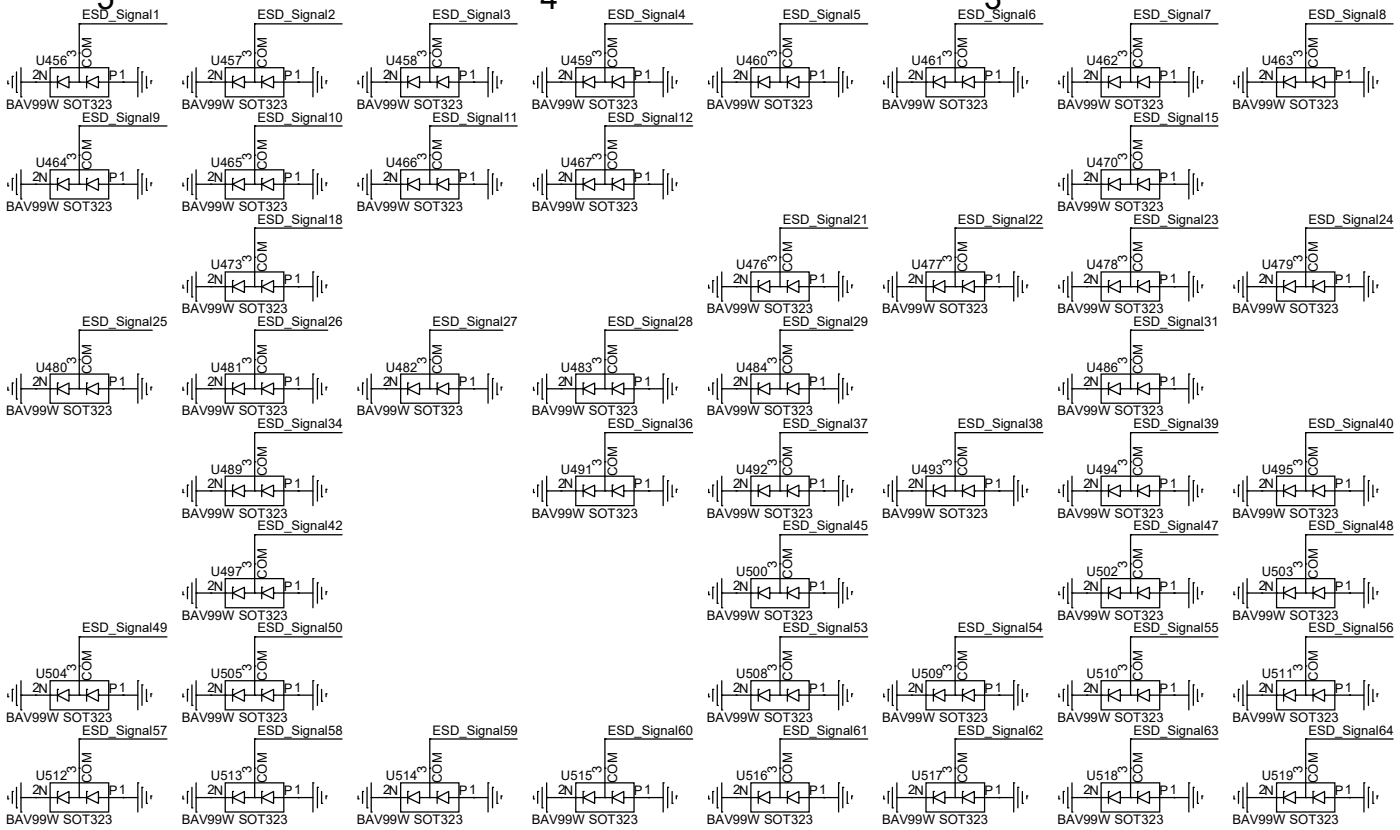

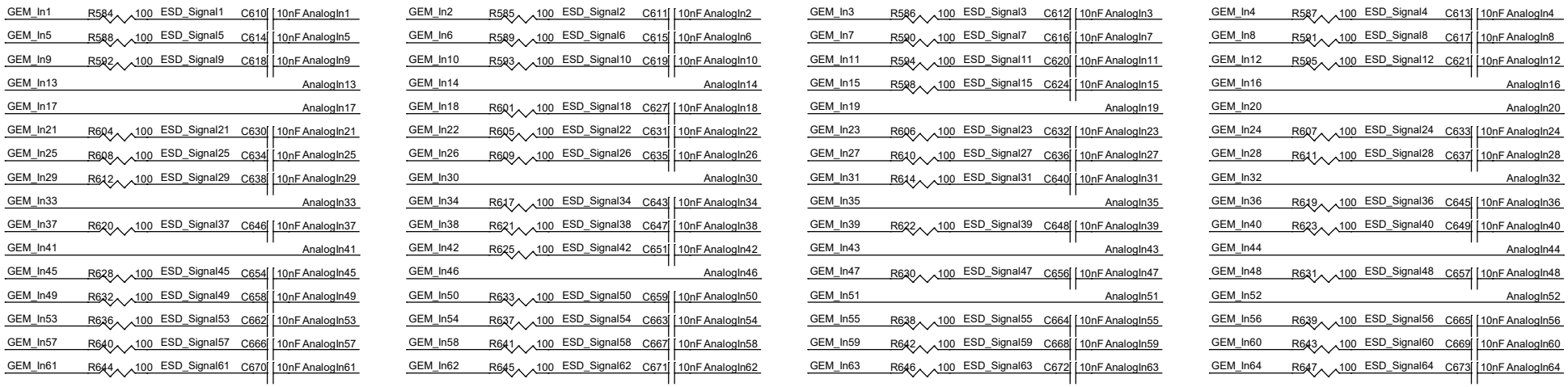

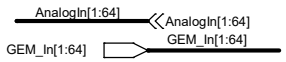

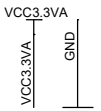

Title	SDHCal FEB	
Size: Custom	Document Number: ASIC B4 -- Analog In	Rev: V1.0
Date: Monday, January 29, 2018	Sheet 18 of 48	

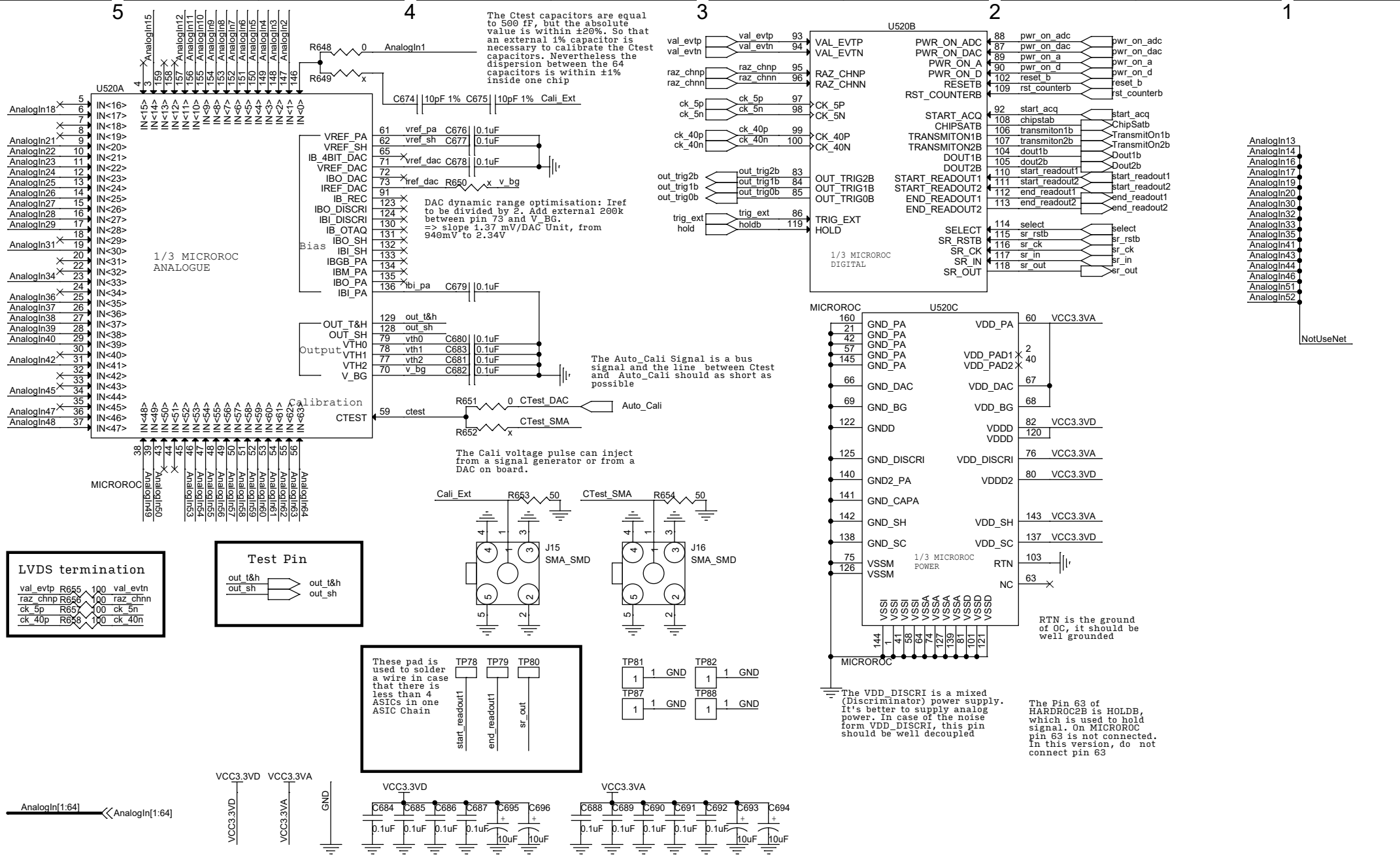
U520A
1/3 MICROROC ANALOGUE
Bias
Output
Calibration
MICROROC
U520B
1/3 MICROROC DIGITAL
U520C
1/3 MICROROC POWER
The Ctest capacitors are equal to 500 fF, but the absolute value is within ±20%. So that an external 1% capacitor is necessary to calibrate the Ctest capacitors. Nevertheless the dispersion between the 64 capacitors is within ±1% inside one chip
DAC dynamic range optimisation: Iref to be divided by 2. Add external 200k between pin 73 and V_BG. => slope 1.37 mV/DAC Unit, from 940mV to 2.34V
The Auto_Cali Signal is a bus signal and the line between Ctest and Auto_Cali should as short as possible
The Cali voltage pulse can inject from a signal generator or from a DAC on board.
LVDS termination
Test Pin
These pad is used to solder a wire in case that there is less than 4 ASICs in one ASIC Chain
RTN is the ground of OC, it should be well grounded
The VDD_DISCRI is a mixed (Discriminator) power supply. It's better to supply analog power. In case of the noise form VDD_DISCRI, this pin should be well decoupled
The Pin 63 of HARDROC2B is HOLDB, which is used to hold signal. On MICROROC pin 63 is not connected. In this version, do not connect pin 63
NotUseNet
Title
SDHCal FEB
Size
Custom
Document Number
ASIC B4 -- Chip
Rev
V1.0
Date:
Monday, January 29, 2018
Sheet
19
of
48

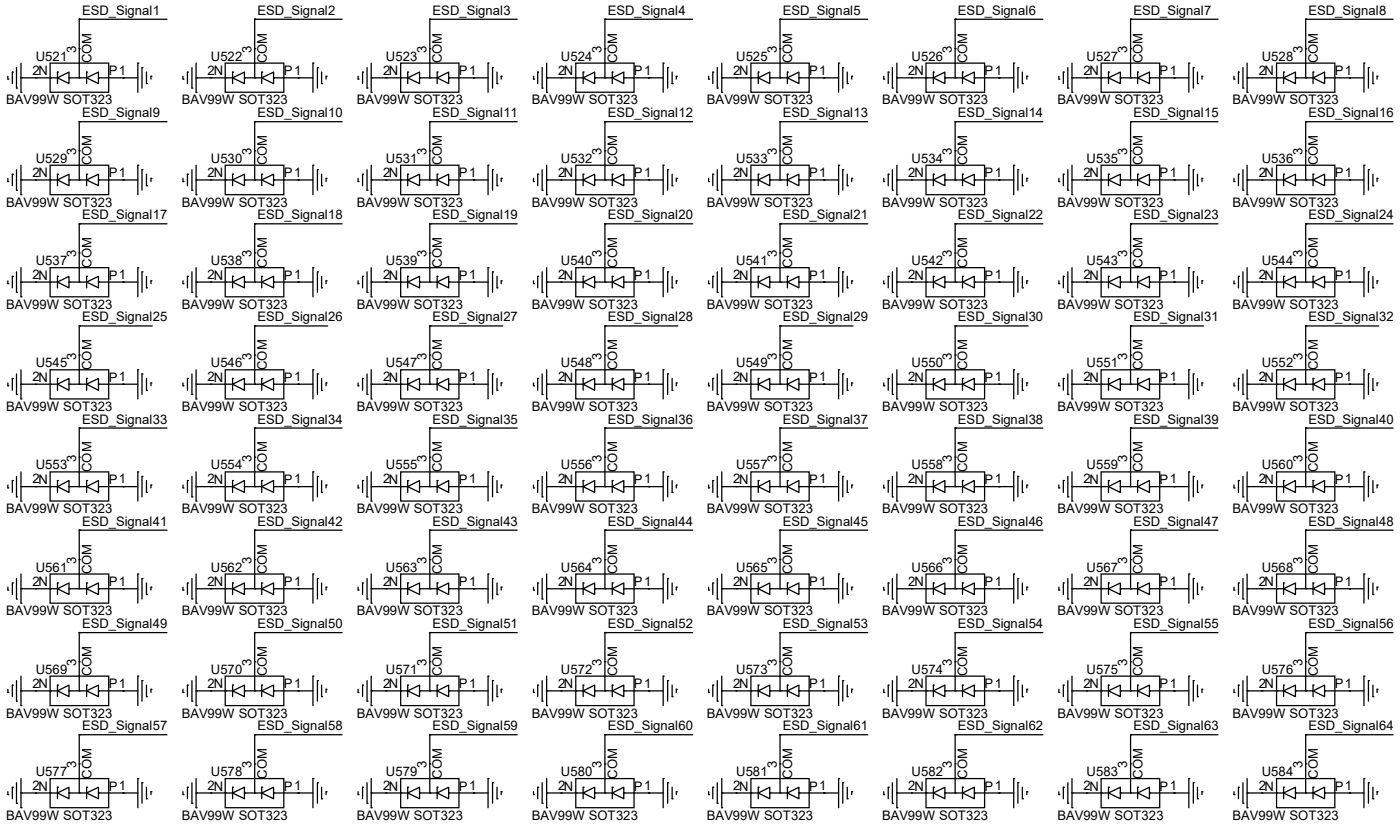

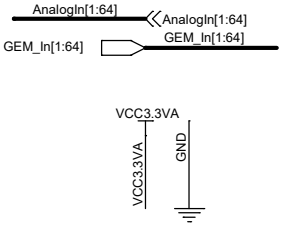

GEM_In1	R667 100	ESD_Signal1	C697	10nF	AnalogIn1		
GEM_In5	R671 100	ESD_Signal5	C701	10nF	AnalogIn5		
GEM_In9	R675 100	ESD_Signal9	C705	10nF	AnalogIn9		
GEM_In13	R679 100	ESD_Signal13	C709	10nF	AnalogIn13		
GEM_In17	R683 100	ESD_Signal17	C713	10nF	AnalogIn17		
GEM_In21	R687 100	ESD_Signal21	C717	10nF	AnalogIn21		
GEM_In25	R691 100	ESD_Signal25	C721	10nF	AnalogIn25		
GEM_In29	R695 100	ESD_Signal29	C725	10nF	AnalogIn29		
GEM_In33	R699 100	ESD_Signal33	C729	10nF	AnalogIn33		
GEM_In37	R703 100	ESD_Signal37	C733	10nF	AnalogIn37		
GEM_In41	R707 100	ESD_Signal41	C737	10nF	AnalogIn41		
GEM_In45	R711 100	ESD_Signal45	C741	10nF	AnalogIn45		
GEM_In49	R715 100	ESD_Signal49	C745	10nF	AnalogIn49		
GEM_In53	R719 100	ESD_Signal53	C749	10nF	AnalogIn53		
GEM_In57	R723 100	ESD_Signal57	C753	10nF	AnalogIn57		
GEM_In61	R727 100	ESD_Signal61	C757	10nF	AnalogIn61		

GEM_In2	R668 100	ESD_Signal2	C698	10nF	AnalogIn2		
GEM_In6	R672 100	ESD_Signal6	C702	10nF	AnalogIn6		
GEM_In10	R676 100	ESD_Signal10	C706	10nF	AnalogIn10		
GEM_In14	R680 100	ESD_Signal14	C710	10nF	AnalogIn14		
GEM_In18	R684 100	ESD_Signal18	C714	10nF	AnalogIn18		
GEM_In22	R688 100	ESD_Signal22	C718	10nF	AnalogIn22		
GEM_In26	R692 100	ESD_Signal26	C722	10nF	AnalogIn26		
GEM_In30	R696 100	ESD_Signal30	C726	10nF	AnalogIn30		
GEM_In34	R700 100	ESD_Signal34	C730	10nF	AnalogIn34		
GEM_In38	R704 100	ESD_Signal38	C734	10nF	AnalogIn38		
GEM_In42	R708 100	ESD_Signal42	C738	10nF	AnalogIn42		
GEM_In46	R712 100	ESD_Signal46	C742	10nF	AnalogIn46		
GEM_In50	R716 100	ESD_Signal50	C746	10nF	AnalogIn50		
GEM_In54	R720 100	ESD_Signal54	C750	10nF	AnalogIn54		
GEM_In58	R724 100	ESD_Signal58	C754	10nF	AnalogIn58		
GEM_In62	R728 100	ESD_Signal62	C758	10nF	AnalogIn62		

GEM_In3	R669 100	ESD_Signal3	C699	10nF	AnalogIn3		
GEM_In7	R673 100	ESD_Signal7	C703	10nF	AnalogIn7		
GEM_In11	R677 100	ESD_Signal11	C707	10nF	AnalogIn11		
GEM_In15	R681 100	ESD_Signal15	C711	10nF	AnalogIn15		
GEM_In19	R685 100	ESD_Signal19	C715	10nF	AnalogIn19		
GEM_In23	R689 100	ESD_Signal23	C719	10nF	AnalogIn23		
GEM_In27	R693 100	ESD_Signal27	C723	10nF	AnalogIn27		
GEM_In31	R697 100	ESD_Signal31	C727	10nF	AnalogIn31		
GEM_In35	R701 100	ESD_Signal35	C731	10nF	AnalogIn35		
GEM_In39	R705 100	ESD_Signal39	C735	10nF	AnalogIn39		
GEM_In43	R709 100	ESD_Signal43	C739	10nF	AnalogIn43		
GEM_In47	R713 100	ESD_Signal47	C743	10nF	AnalogIn47		
GEM_In51	R717 100	ESD_Signal51	C747	10nF	AnalogIn51		
GEM_In55	R721 100	ESD_Signal55	C751	10nF	AnalogIn55		
GEM_In59	R725 100	ESD_Signal59	C755	10nF	AnalogIn59		
GEM_In63	R729 100	ESD_Signal63	C759	10nF	AnalogIn63		

GEM_In4	R670 100	ESD_Signal4	C700	10nF	AnalogIn4		
GEM_In8	R674 100	ESD_Signal8	C704	10nF	AnalogIn8		
GEM_In12	R678 100	ESD_Signal12	C708	10nF	AnalogIn12		
GEM_In16	R682 100	ESD_Signal16	C712	10nF	AnalogIn16		
GEM_In20	R686 100	ESD_Signal20	C716	10nF	AnalogIn20		
GEM_In24	R690 100	ESD_Signal24	C720	10nF	AnalogIn24		
GEM_In28	R694 100	ESD_Signal28	C724	10nF	AnalogIn28		
GEM_In32	R698 100	ESD_Signal32	C728	10nF	AnalogIn32		
GEM_In36	R702 100	ESD_Signal36	C732	10nF	AnalogIn36		
GEM_In40	R706 100	ESD_Signal40	C736	10nF	AnalogIn40		
GEM_In44	R710 100	ESD_Signal44	C740	10nF	AnalogIn44		
GEM_In48	R714 100	ESD_Signal48	C744	10nF	AnalogIn48		
GEM_In52	R718 100	ESD_Signal52	C748	10nF	AnalogIn52		
GEM_In56	R722 100	ESD_Signal56	C752	10nF	AnalogIn56		
GEM_In60	R726 100	ESD_Signal60	C756	10nF	AnalogIn60		
GEM_In64	R730 100	ESD_Signal64	C760	10nF	AnalogIn64		

Title	SDHCal FEB		
Size	Document Number		Rev
Custom	ASIC C1 -- Analog In		V1.0
Date:	Monday, January 29, 2018	Sheet 20 of 48	

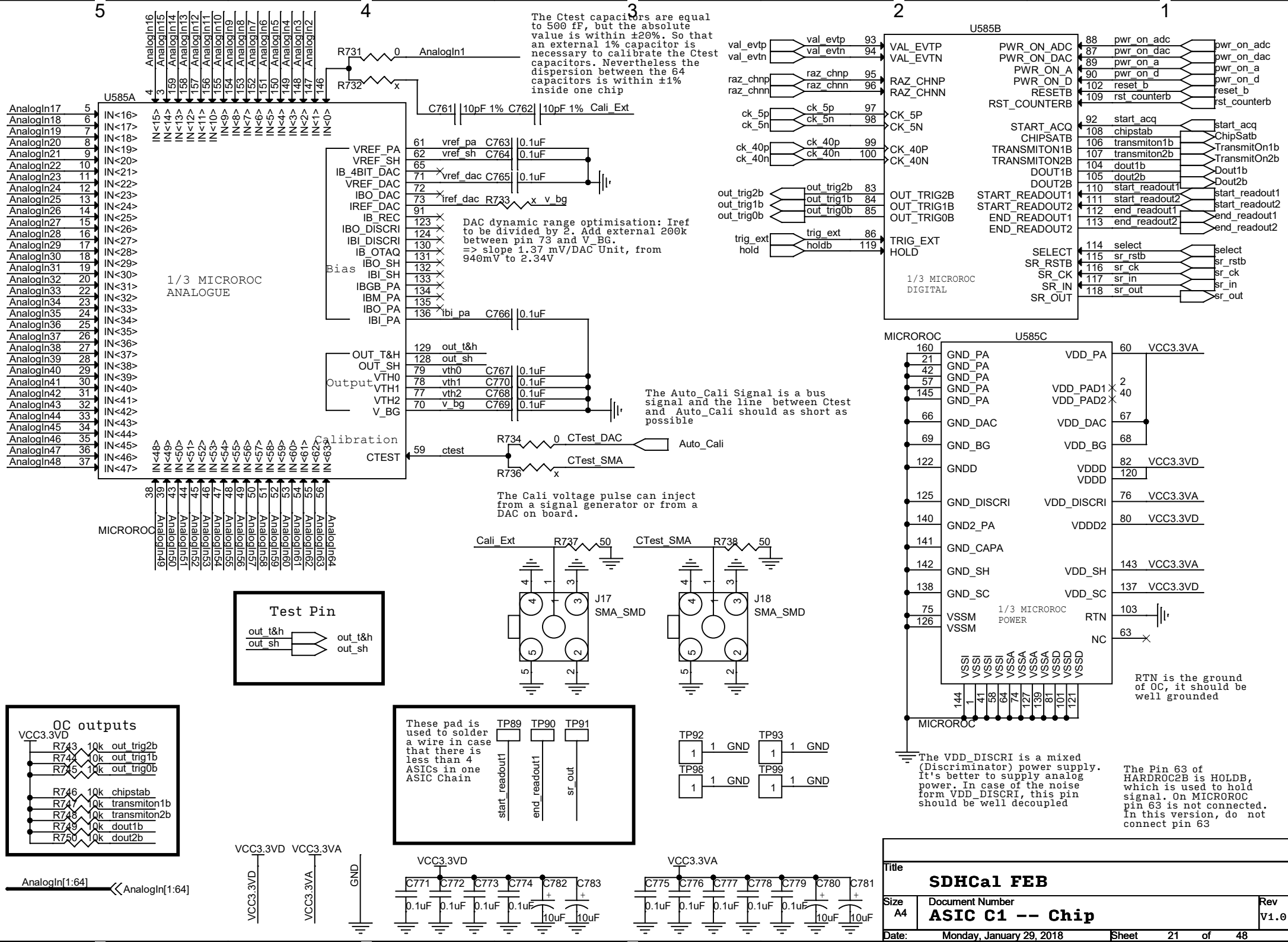
U585A
1/3 MICROROC ANALOGUE
Bias
Output
Calibration
MICROROC
The Ctest capacitors are equal to 500 fF, but the absolute value is within ±20%. So that an external 1% capacitor is necessary to calibrate the Ctest capacitors. Nevertheless the dispersion between the 64 capacitors is within ±1% inside one chip
DAC dynamic range optimisation: Iref to be divided by 2. Add external 200k between pin 73 and V_BG. => slope 1.37 mV/DAC Unit, from 940mV to 2.34V
The Auto_Cali Signal is a bus signal and the line between Ctest and Auto_Cali should as short as possible
The Cali voltage pulse can inject from a signal generator or from a DAC on board.
U585B
1/3 MICROROC DIGITAL
U585C
1/3 MICROROC POWER
Test Pin
OC outputs
These pad is used to solder a wire in case that there is less than 4 ASICs in one ASIC Chain
RTN is the ground of OC, it should be well grounded
The VDD_DISCRI is a mixed (Discriminator) power supply. It's better to supply analog power. In case of the noise form VDD_DISCRI, this pin should be well decoupled
The Pin 63 of HARDROC2B is HOLDB, which is used to hold signal. On MICROROC pin 63 is not connected. In this version, do not connect pin 63
SDHCal FEB
ASIC C1 -- Chip
Monday, January 29, 2018

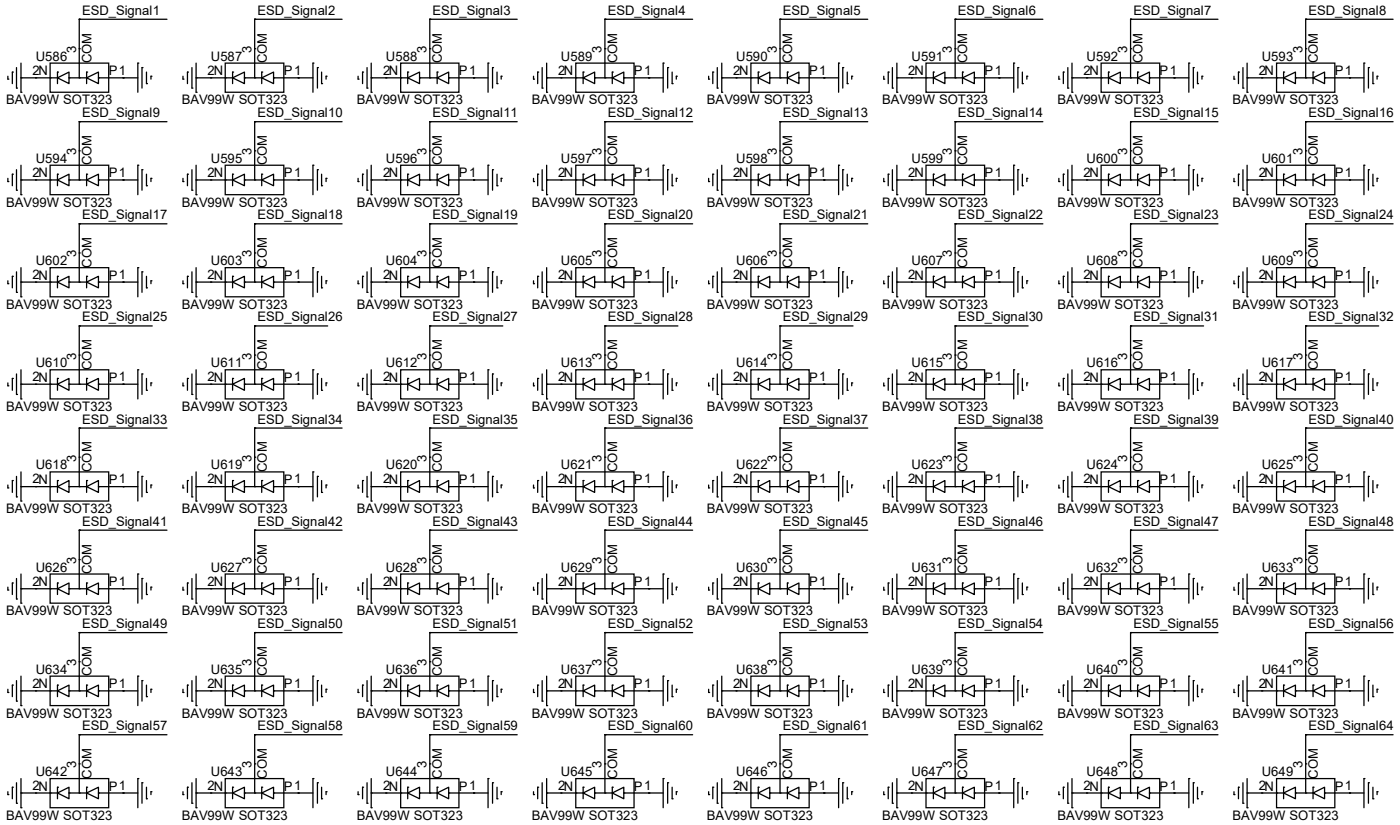

AnalogIn[1:64] AnalogIn[1:64]

GEM_In[1:64] GEM_In[1:64]

VCC3.3VA

VCC3.3VA GND

GEM_In1	R751	100	ESD_Signal1	C784	10nF AnalogIn1	GEM_In2	R752	100	ESD_Signal2	C785	10nF AnalogIn2	GEM_In3	R753	100	ESD_Signal3	C786	10nF AnalogIn3	GEM_In4	R754	100	ESD_Signal4	C787	10nF AnalogIn4
GEM_In5	R755	100	ESD_Signal5	C788	10nF AnalogIn5	GEM_In6	R756	100	ESD_Signal6	C789	10nF AnalogIn6	GEM_In7	R757	100	ESD_Signal7	C790	10nF AnalogIn7	GEM_In8	R758	100	ESD_Signal8	C791	10nF AnalogIn8
GEM_In9	R759	100	ESD_Signal9	C792	10nF AnalogIn9	GEM_In10	R760	100	ESD_Signal10	C793	10nF AnalogIn10	GEM_In11	R761	100	ESD_Signal11	C794	10nF AnalogIn11	GEM_In12	R762	100	ESD_Signal12	C795	10nF AnalogIn12
GEM_In13	R763	100	ESD_Signal13	C796	10nF AnalogIn13	GEM_In14	R764	100	ESD_Signal14	C797	10nF AnalogIn14	GEM_In15	R765	100	ESD_Signal15	C798	10nF AnalogIn15	GEM_In16	R766	100	ESD_Signal16	C799	10nF AnalogIn16
GEM_In17	R767	100	ESD_Signal17	C800	10nF AnalogIn17	GEM_In18	R768	100	ESD_Signal18	C801	10nF AnalogIn18	GEM_In19	R769	100	ESD_Signal19	C802	10nF AnalogIn19	GEM_In20	R770	100	ESD_Signal20	C803	10nF AnalogIn20
GEM_In21	R771	100	ESD_Signal21	C804	10nF AnalogIn21	GEM_In22	R772	100	ESD_Signal22	C805	10nF AnalogIn22	GEM_In23	R773	100	ESD_Signal23	C806	10nF AnalogIn23	GEM_In24	R774	100	ESD_Signal24	C807	10nF AnalogIn24
GEM_In25	R775	100	ESD_Signal25	C808	10nF AnalogIn25	GEM_In26	R776	100	ESD_Signal26	C809	10nF AnalogIn26	GEM_In27	R777	100	ESD_Signal27	C810	10nF AnalogIn27	GEM_In28	R778	100	ESD_Signal28	C811	10nF AnalogIn28
GEM_In29	R779	100	ESD_Signal29	C812	10nF AnalogIn29	GEM_In30	R780	100	ESD_Signal30	C813	10nF AnalogIn30	GEM_In31	R781	100	ESD_Signal31	C814	10nF AnalogIn31	GEM_In32	R782	100	ESD_Signal32	C815	10nF AnalogIn32
GEM_In33	R783	100	ESD_Signal33	C816	10nF AnalogIn33	GEM_In34	R784	100	ESD_Signal34	C817	10nF AnalogIn34	GEM_In35	R785	100	ESD_Signal35	C818	10nF AnalogIn35	GEM_In36	R786	100	ESD_Signal36	C819	10nF AnalogIn36
GEM_In37	R787	100	ESD_Signal37	C820	10nF AnalogIn37	GEM_In38	R788	100	ESD_Signal38	C821	10nF AnalogIn38	GEM_In39	R789	100	ESD_Signal39	C822	10nF AnalogIn39	GEM_In40	R790	100	ESD_Signal40	C823	10nF AnalogIn40
GEM_In41	R791	100	ESD_Signal41	C824	10nF AnalogIn41	GEM_In42	R792	100	ESD_Signal42	C825	10nF AnalogIn42	GEM_In43	R793	100	ESD_Signal43	C826	10nF AnalogIn43	GEM_In44	R794	100	ESD_Signal44	C827	10nF AnalogIn44
GEM_In45	R795	100	ESD_Signal45	C828	10nF AnalogIn45	GEM_In46	R796	100	ESD_Signal46	C829	10nF AnalogIn46	GEM_In47	R797	100	ESD_Signal47	C830	10nF AnalogIn47	GEM_In48	R798	100	ESD_Signal48	C831	10nF AnalogIn48
GEM_In49	R799	100	ESD_Signal49	C832	10nF AnalogIn49	GEM_In50	R800	100	ESD_Signal50	C833	10nF AnalogIn50	GEM_In51	R801	100	ESD_Signal51	C834	10nF AnalogIn51	GEM_In52	R802	100	ESD_Signal52	C835	10nF AnalogIn52
GEM_In53	R803	100	ESD_Signal53	C836	10nF AnalogIn53	GEM_In54	R804	100	ESD_Signal54	C837	10nF AnalogIn54	GEM_In55	R805	100	ESD_Signal55	C838	10nF AnalogIn55	GEM_In56	R806	100	ESD_Signal56	C839	10nF AnalogIn56
GEM_In57	R807	100	ESD_Signal57	C840	10nF AnalogIn57	GEM_In58	R808	100	ESD_Signal58	C841	10nF AnalogIn58	GEM_In59	R809	100	ESD_Signal59	C842	10nF AnalogIn59	GEM_In60	R810	100	ESD_Signal60	C843	10nF AnalogIn60
GEM_In61	R811	100	ESD_Signal61	C844	10nF AnalogIn61	GEM_In62	R812	100	ESD_Signal62	C845	10nF AnalogIn62	GEM_In63	R813	100	ESD_Signal63	C846	10nF AnalogIn63	GEM_In64	R814	100	ESD_Signal64	C847	10nF AnalogIn64

Title	SDHCal FEB	
Size: Custom	Document Number: ASIC C2 -- Analog In	Rev: V1.0
Date: Monday, January 29, 2018	Sheet 22 of 48	

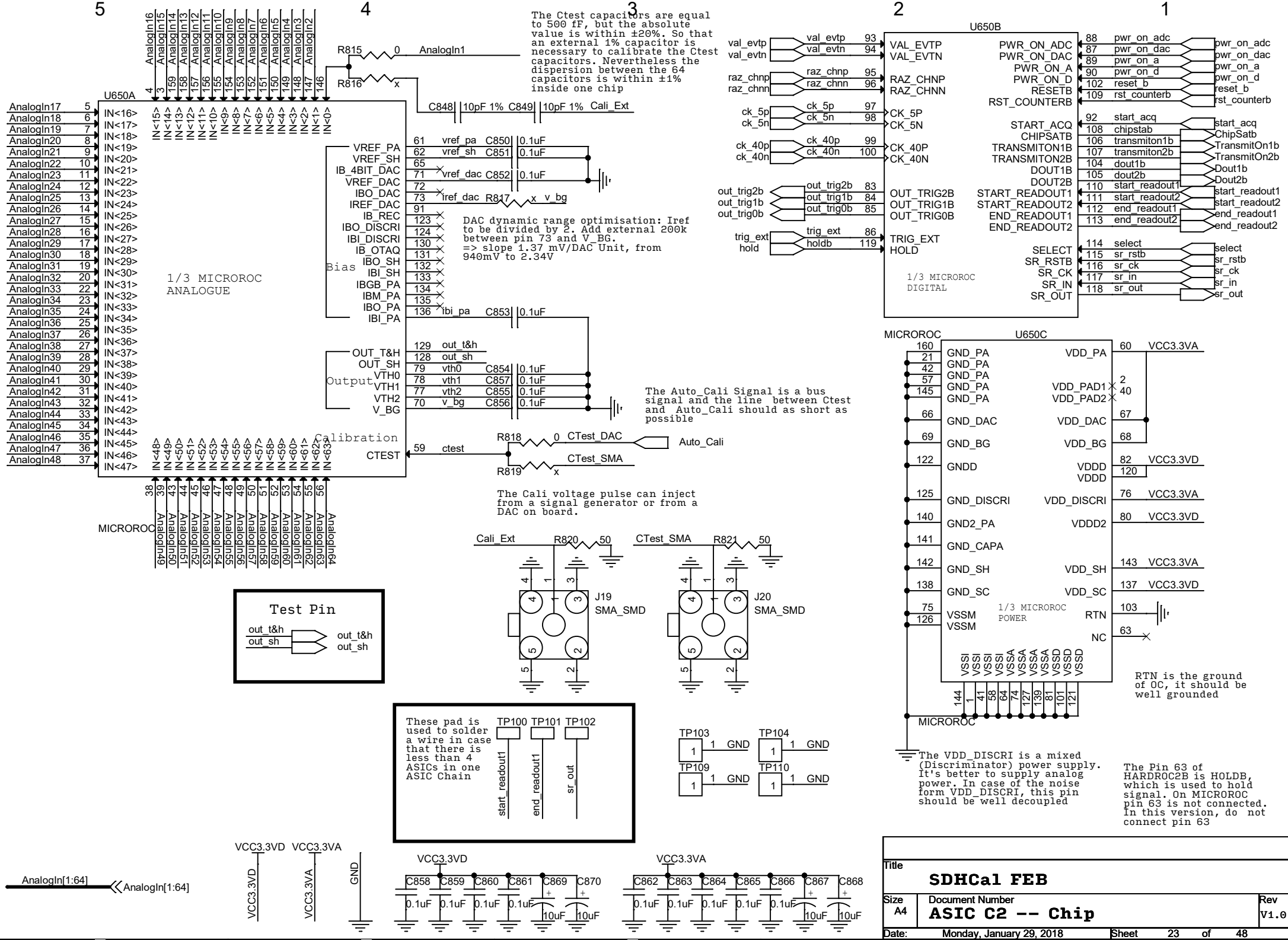
U650A
1/3 MICROROC ANALOGUE
Bias
Output
Calibration
MICROROC
U650B
1/3 MICROROC DIGITAL
U650C
1/3 MICROROC POWER
MICROROC
The Ctest capacitors are equal to 500 fF, but the absolute value is within ±20%. So that an external 1% capacitor is necessary to calibrate the Ctest capacitors. Nevertheless the dispersion between the 64 capacitors is within ±1% inside one chip
DAC dynamic range optimisation: Iref to be divided by 2. Add external 200k between pin 73 and V_BG. => slope 1.37 mV/DAC Unit, from 940mV to 2.34V
The Auto_Cali Signal is a bus signal and the line between Ctest and Auto_Cali should as short as possible
The Cali voltage pulse can inject from a signal generator or from a DAC on board.
Test Pin
These pad is used to solder a wire in case that there is less than 4 ASICs in one ASIC Chain
RTN is the ground of OC, it should be well grounded
The VDD_DISCRI is a mixed (Discriminator) power supply. It's better to supply analog power. In case of the noise form VDD_DISCRI, this pin should be well decoupled
The Pin 63 of HARDROC2B is HOLDB, which is used to hold signal. On MICROROC pin 63 is not connected. In this version, do not connect pin 63
SDHCal FEB
ASIC C2 -- Chip
Monday, January 29, 2018

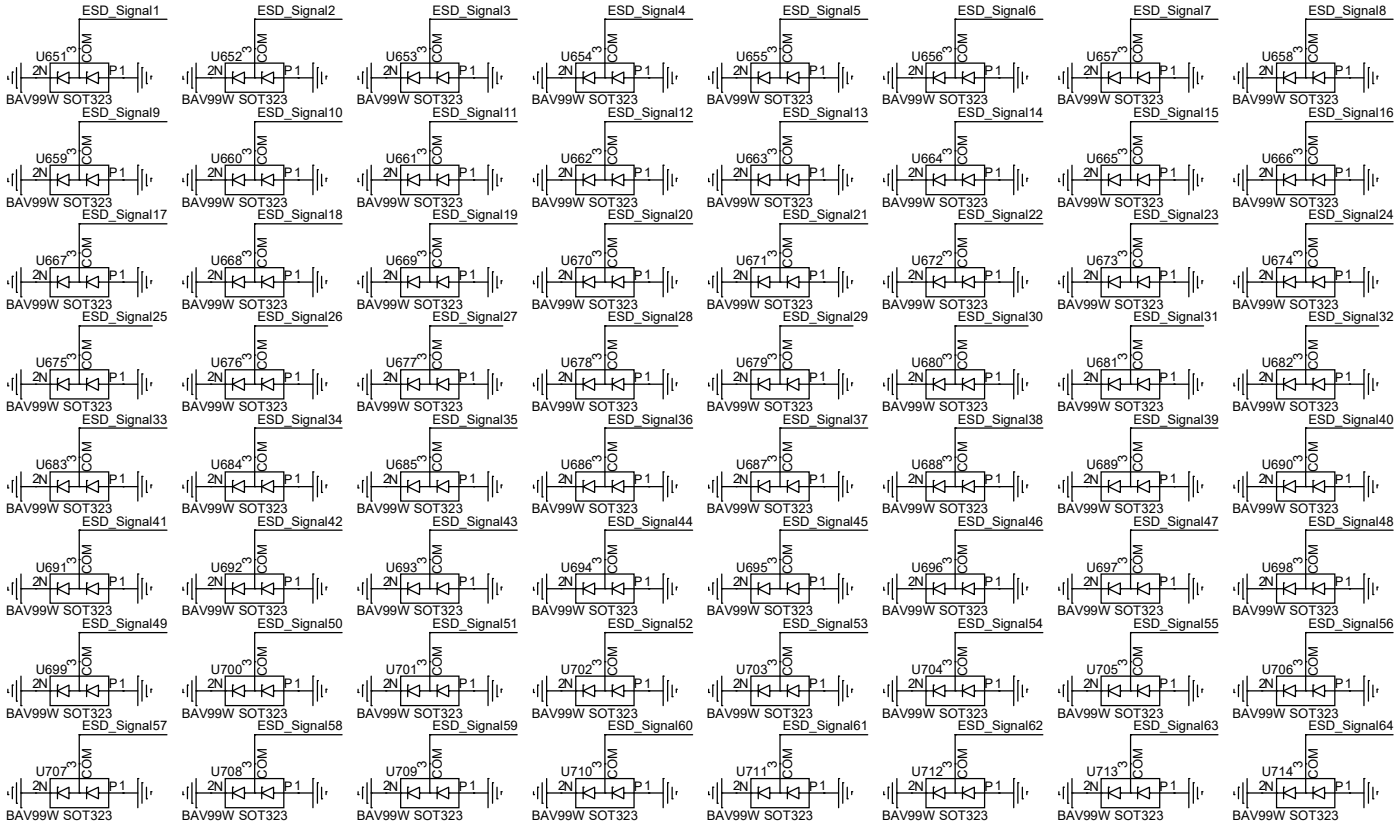

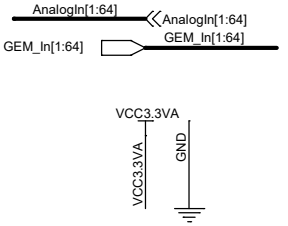

GEM_In1	R834	100	ESD_Signal1	C871	10nF AnalogIn1	GEM_In2	R835	100	ESD_Signal2	C872	10nF AnalogIn2
GEM_In5	R838	100	ESD_Signal5	C875	10nF AnalogIn5	GEM_In6	R839	100	ESD_Signal6	C876	10nF AnalogIn6
GEM_In9	R842	100	ESD_Signal9	C879	10nF AnalogIn9	GEM_In10	R843	100	ESD_Signal10	C880	10nF AnalogIn10
GEM_In13	R846	100	ESD_Signal13	C883	10nF AnalogIn13	GEM_In14	R847	100	ESD_Signal14	C884	10nF AnalogIn14
GEM_In17	R850	100	ESD_Signal17	C887	10nF AnalogIn17	GEM_In18	R851	100	ESD_Signal18	C888	10nF AnalogIn18
GEM_In21	R854	100	ESD_Signal21	C891	10nF AnalogIn21	GEM_In22	R855	100	ESD_Signal22	C892	10nF AnalogIn22
GEM_In25	R858	100	ESD_Signal25	C895	10nF AnalogIn25	GEM_In26	R859	100	ESD_Signal26	C896	10nF AnalogIn26
GEM_In29	R862	100	ESD_Signal29	C899	10nF AnalogIn29	GEM_In30	R863	100	ESD_Signal30	C900	10nF AnalogIn30
GEM_In33	R866	100	ESD_Signal33	C903	10nF AnalogIn33	GEM_In34	R867	100	ESD_Signal34	C904	10nF AnalogIn34
GEM_In37	R870	100	ESD_Signal37	C907	10nF AnalogIn37	GEM_In38	R871	100	ESD_Signal38	C908	10nF AnalogIn38
GEM_In41	R874	100	ESD_Signal41	C911	10nF AnalogIn41	GEM_In42	R875	100	ESD_Signal42	C912	10nF AnalogIn42
GEM_In45	R878	100	ESD_Signal45	C915	10nF AnalogIn45	GEM_In46	R879	100	ESD_Signal46	C916	10nF AnalogIn46
GEM_In49	R882	100	ESD_Signal49	C919	10nF AnalogIn49	GEM_In50	R883	100	ESD_Signal50	C920	10nF AnalogIn50
GEM_In53	R886	100	ESD_Signal53	C923	10nF AnalogIn53	GEM_In54	R887	100	ESD_Signal54	C924	10nF AnalogIn54
GEM_In57	R890	100	ESD_Signal57	C927	10nF AnalogIn57	GEM_In58	R891	100	ESD_Signal58	C928	10nF AnalogIn58
GEM_In61	R894	100	ESD_Signal61	C931	10nF AnalogIn61	GEM_In62	R895	100	ESD_Signal62	C932	10nF AnalogIn62

GEM_In3	R836	100	ESD_Signal3	C873	10nF AnalogIn3	GEM_In4	R837	100	ESD_Signal4	C874	10nF AnalogIn4
GEM_In7	R840	100	ESD_Signal7	C877	10nF AnalogIn7	GEM_In8	R841	100	ESD_Signal8	C878	10nF AnalogIn8
GEM_In11	R844	100	ESD_Signal11	C881	10nF AnalogIn11	GEM_In12	R845	100	ESD_Signal12	C882	10nF AnalogIn12
GEM_In15	R848	100	ESD_Signal15	C885	10nF AnalogIn15	GEM_In16	R849	100	ESD_Signal16	C886	10nF AnalogIn16
GEM_In19	R852	100	ESD_Signal19	C889	10nF AnalogIn19	GEM_In20	R853	100	ESD_Signal20	C890	10nF AnalogIn20
GEM_In23	R856	100	ESD_Signal23	C893	10nF AnalogIn23	GEM_In24	R857	100	ESD_Signal24	C894	10nF AnalogIn24
GEM_In27	R860	100	ESD_Signal27	C897	10nF AnalogIn27	GEM_In28	R861	100	ESD_Signal28	C898	10nF AnalogIn28
GEM_In31	R864	100	ESD_Signal31	C901	10nF AnalogIn31	GEM_In32	R865	100	ESD_Signal32	C902	10nF AnalogIn32
GEM_In35	R868	100	ESD_Signal35	C905	10nF AnalogIn35	GEM_In36	R869	100	ESD_Signal36	C906	10nF AnalogIn36
GEM_In39	R872	100	ESD_Signal39	C909	10nF AnalogIn39	GEM_In40	R873	100	ESD_Signal40	C910	10nF AnalogIn40
GEM_In43	R876	100	ESD_Signal43	C913	10nF AnalogIn43	GEM_In44	R877	100	ESD_Signal44	C914	10nF AnalogIn44
GEM_In47	R880	100	ESD_Signal47	C917	10nF AnalogIn47	GEM_In48	R881	100	ESD_Signal48	C918	10nF AnalogIn48
GEM_In51	R884	100	ESD_Signal51	C921	10nF AnalogIn51	GEM_In52	R885	100	ESD_Signal52	C922	10nF AnalogIn52
GEM_In55	R888	100	ESD_Signal55	C925	10nF AnalogIn55	GEM_In56	R889	100	ESD_Signal56	C926	10nF AnalogIn56
GEM_In59	R892	100	ESD_Signal59	C929	10nF AnalogIn59	GEM_In60	R893	100	ESD_Signal60	C930	10nF AnalogIn60
GEM_In63	R896	100	ESD_Signal63	C933	10nF AnalogIn63	GEM_In64	R897	100	ESD_Signal64	C934	10nF AnalogIn64

Title	SDHCal FEB	
Size: Custom	Document Number: ASIC C3 -- Analog In	Rev: V1.0
Date: Monday, January 29, 2018	Sheet 24 of 48	

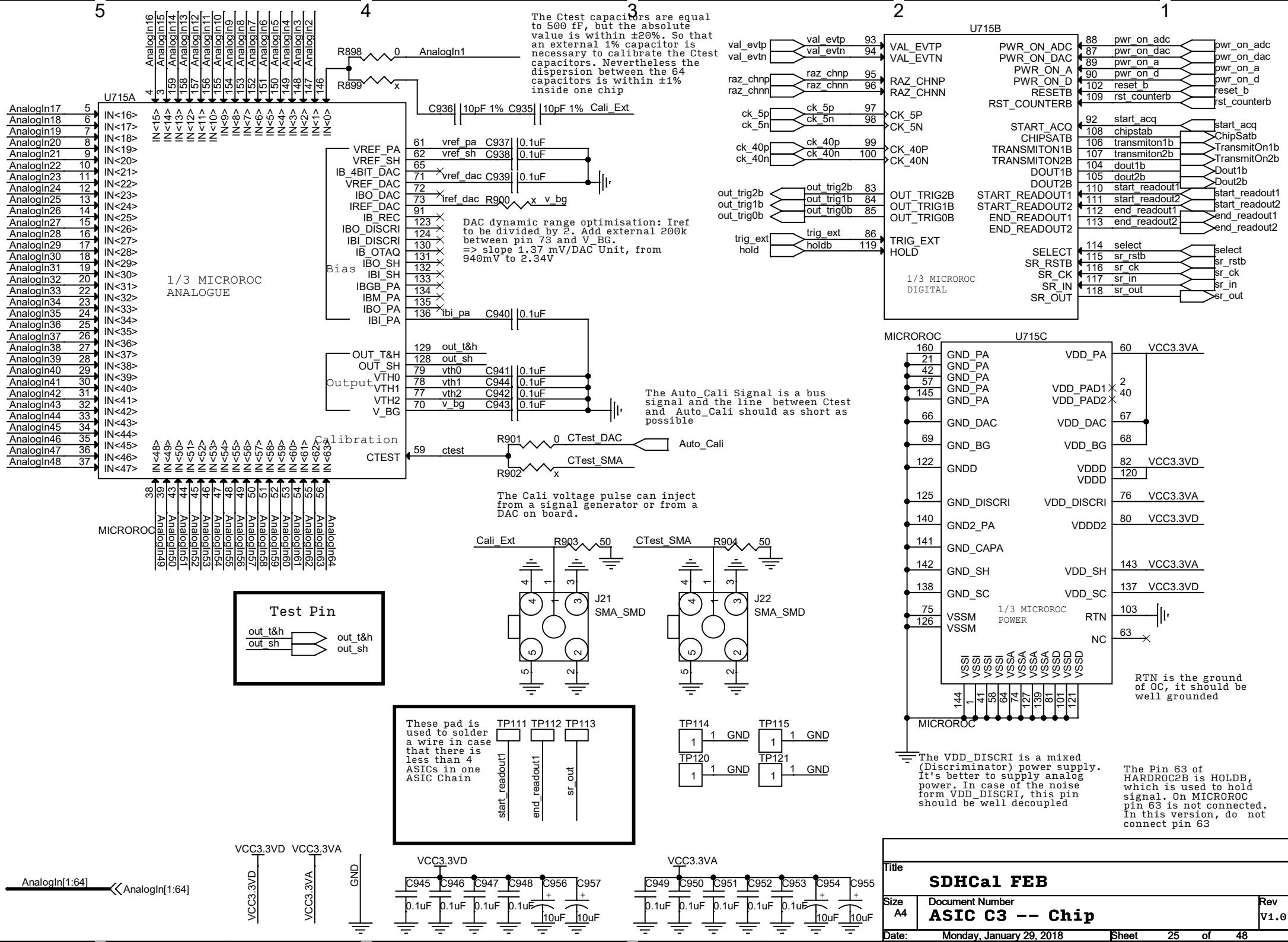
U715A
1/3 MICROROC ANALOGUE
Bias
Output
Calibration
MICROROC
U715B
1/3 MICROROC DIGITAL
U715C
1/3 MICROROC POWER
The Ctest capacitors are equal to 500 fF, but the absolute value is within ±20%. So that an external 1% capacitor is necessary to calibrate the Ctest capacitors. Nevertheless the dispersion between the 64 capacitors is within ±1% inside one chip
DAC dynamic range optimisation: Iref to be divided by 2. Add external 200k between pin 73 and V_BG. => slope 1.37 mV/DAC Unit, from 940mV to 2.34V
The Auto_Cali Signal is a bus signal and the line between Ctest and Auto_Cali should as short as possible
The Cali voltage pulse can inject from a signal generator or from a DAC on board.
Test Pin
These pad is used to solder a wire in case that there is less than 4 ASICs in one ASIC Chain
RTN is the ground of OC, it should be well grounded
The VDD_DISCRI is a mixed (Discriminator) power supply. It's better to supply analog power. In case of the noise form VDD_DISCRI, this pin should be well decoupled
The Pin 63 of HARDROC2B is HOLDB, which is used to hold signal. On MICROROC pin 63 is not connected. In this version, do not connect pin 63
SDHCal FEB
ASIC C3 -- Chip
Monday, January 29, 2018

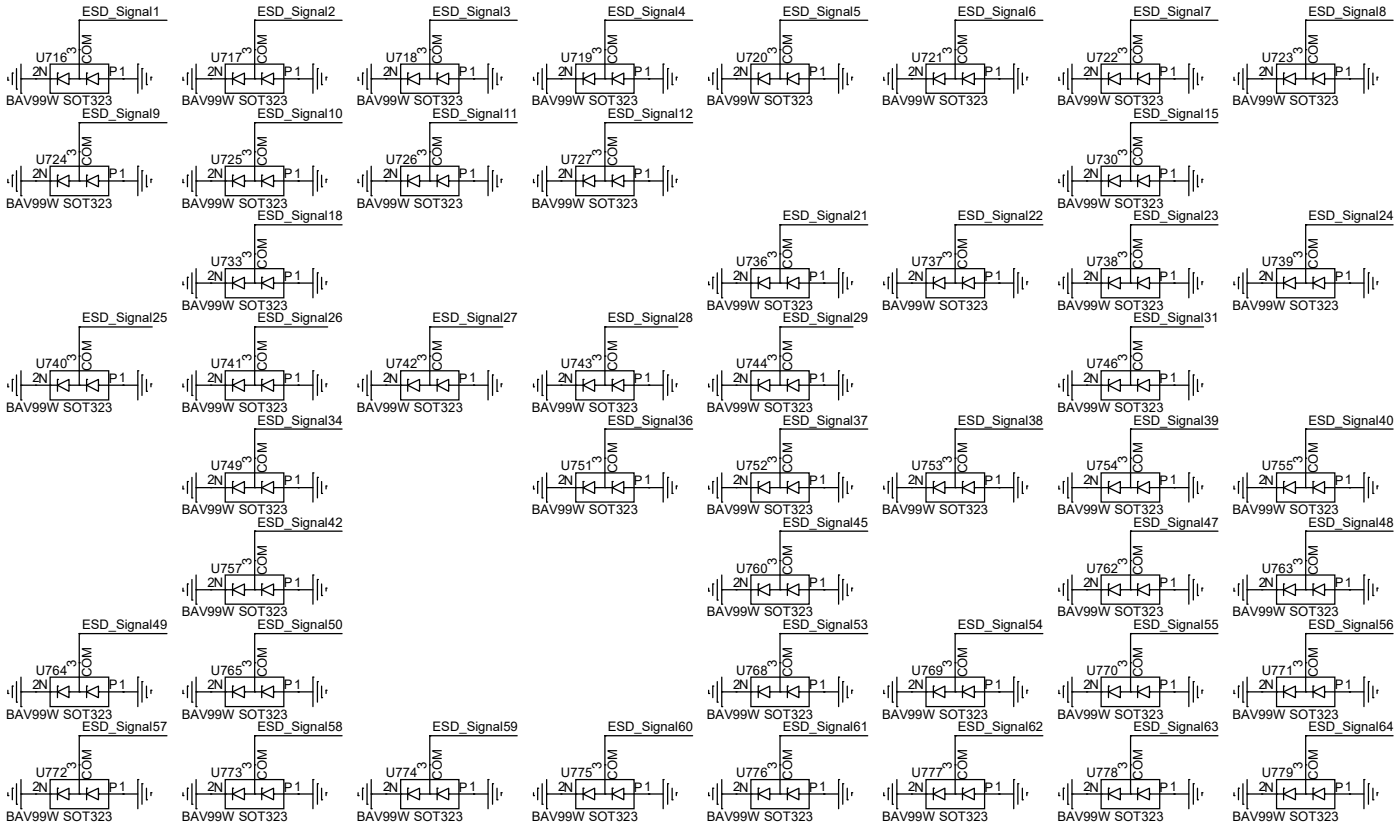

AnalogIn[1:64]
AnalogIn[1:64]
GEM_In[1:64]
GEM_In[1:64]

VCC3.3VA
VCC3.3VA
GND

GEM_In1	R917	100	ESD_Signal1	C958	10nF AnalogIn1	GEM_In2	R918	100	ESD_Signal2	C959	10nF AnalogIn2	GEM_In3	R919	100	ESD_Signal3	C960	10nF AnalogIn3	GEM_In4	R920	100	ESD_Signal4	C961	10nF AnalogIn4
GEM_In5	R921	100	ESD_Signal5	C962	10nF AnalogIn5	GEM_In6	R922	100	ESD_Signal6	C963	10nF AnalogIn6	GEM_In7	R923	100	ESD_Signal7	C964	10nF AnalogIn7	GEM_In8	R924	100	ESD_Signal8	C965	10nF AnalogIn8
GEM_In9	R925	100	ESD_Signal9	C966	10nF AnalogIn9	GEM_In10	R926	100	ESD_Signal10	C967	10nF AnalogIn10	GEM_In11	R927	100	ESD_Signal11	C968	10nF AnalogIn11	GEM_In12	R928	100	ESD_Signal12	C969	10nF AnalogIn12
GEM_In13					AnalogIn13	GEM_In14					AnalogIn14	GEM_In15	R931	100	ESD_Signal15	C972	10nF AnalogIn15	GEM_In16					AnalogIn16
GEM_In17					AnalogIn17	GEM_In18	R934	100	ESD_Signal18	C975	10nF AnalogIn18	GEM_In19					AnalogIn19	GEM_In20					AnalogIn20
GEM_In21	R937	100	ESD_Signal21	C978	10nF AnalogIn21	GEM_In22	R938	100	ESD_Signal22	C979	10nF AnalogIn22	GEM_In23	R939	100	ESD_Signal23	C980	10nF AnalogIn23	GEM_In24	R940	100	ESD_Signal24	C981	10nF AnalogIn24
GEM_In25	R941	100	ESD_Signal25	C982	10nF AnalogIn25	GEM_In26	R942	100	ESD_Signal26	C983	10nF AnalogIn26	GEM_In27	R943	100	ESD_Signal27	C984	10nF AnalogIn27	GEM_In28	R944	100	ESD_Signal28	C985	10nF AnalogIn28
GEM_In29	R945	100	ESD_Signal29	C986	10nF AnalogIn29	GEM_In30					AnalogIn30	GEM_In31	R947	100	ESD_Signal31	C988	10nF AnalogIn31	GEM_In32					AnalogIn32
GEM_In33					AnalogIn33	GEM_In34	R950	100	ESD_Signal34	C991	10nF AnalogIn34	GEM_In35					AnalogIn35	GEM_In36	R952	100	ESD_Signal36	C993	10nF AnalogIn36
GEM_In37	R953	100	ESD_Signal37	C994	10nF AnalogIn37	GEM_In38	R954	100	ESD_Signal38	C995	10nF AnalogIn38	GEM_In39	R955	100	ESD_Signal39	C996	10nF AnalogIn39	GEM_In40	R956	100	ESD_Signal40	C997	10nF AnalogIn40
GEM_In41					AnalogIn41	GEM_In42	R958	100	ESD_Signal42	C999	10nF AnalogIn42	GEM_In43					AnalogIn43	GEM_In44					AnalogIn44
GEM_In45	R961	100	ESD_Signal45	C1002	10nF AnalogIn45	GEM_In46					AnalogIn46	GEM_In47	R963	100	ESD_Signal47	C1004	10nF AnalogIn47	GEM_In48	R964	100	ESD_Signal48	C1005	10nF AnalogIn48
GEM_In49	R965	100	ESD_Signal49	C1006	10nF AnalogIn49	GEM_In50	R966	100	ESD_Signal50	C1007	10nF AnalogIn50	GEM_In51					AnalogIn51	GEM_In52					AnalogIn52
GEM_In53	R969	100	ESD_Signal53	C1010	10nF AnalogIn53	GEM_In54	R970	100	ESD_Signal54	C1011	10nF AnalogIn54	GEM_In55	R971	100	ESD_Signal55	C1012	10nF AnalogIn55	GEM_In56	R972	100	ESD_Signal56	C1013	10nF AnalogIn56
GEM_In57	R973	100	ESD_Signal57	C1014	10nF AnalogIn57	GEM_In58	R974	100	ESD_Signal58	C1015	10nF AnalogIn58	GEM_In59	R975	100	ESD_Signal59	C1016	10nF AnalogIn59	GEM_In60	R976	100	ESD_Signal60	C1017	10nF AnalogIn60
GEM_In61	R977	100	ESD_Signal61	C1018	10nF AnalogIn61	GEM_In62	R978	100	ESD_Signal62	C1019	10nF AnalogIn62	GEM_In63	R979	100	ESD_Signal63	C1020	10nF AnalogIn63	GEM_In64	R980	100	ESD_Signal64	C1021	10nF AnalogIn64

Title	SDHCal FEB	
Size: Custom	Document Number: ASIC C4 -- Analog In	Rev: V1.0
Date: Monday, January 29, 2018	Sheet 26 of 48	

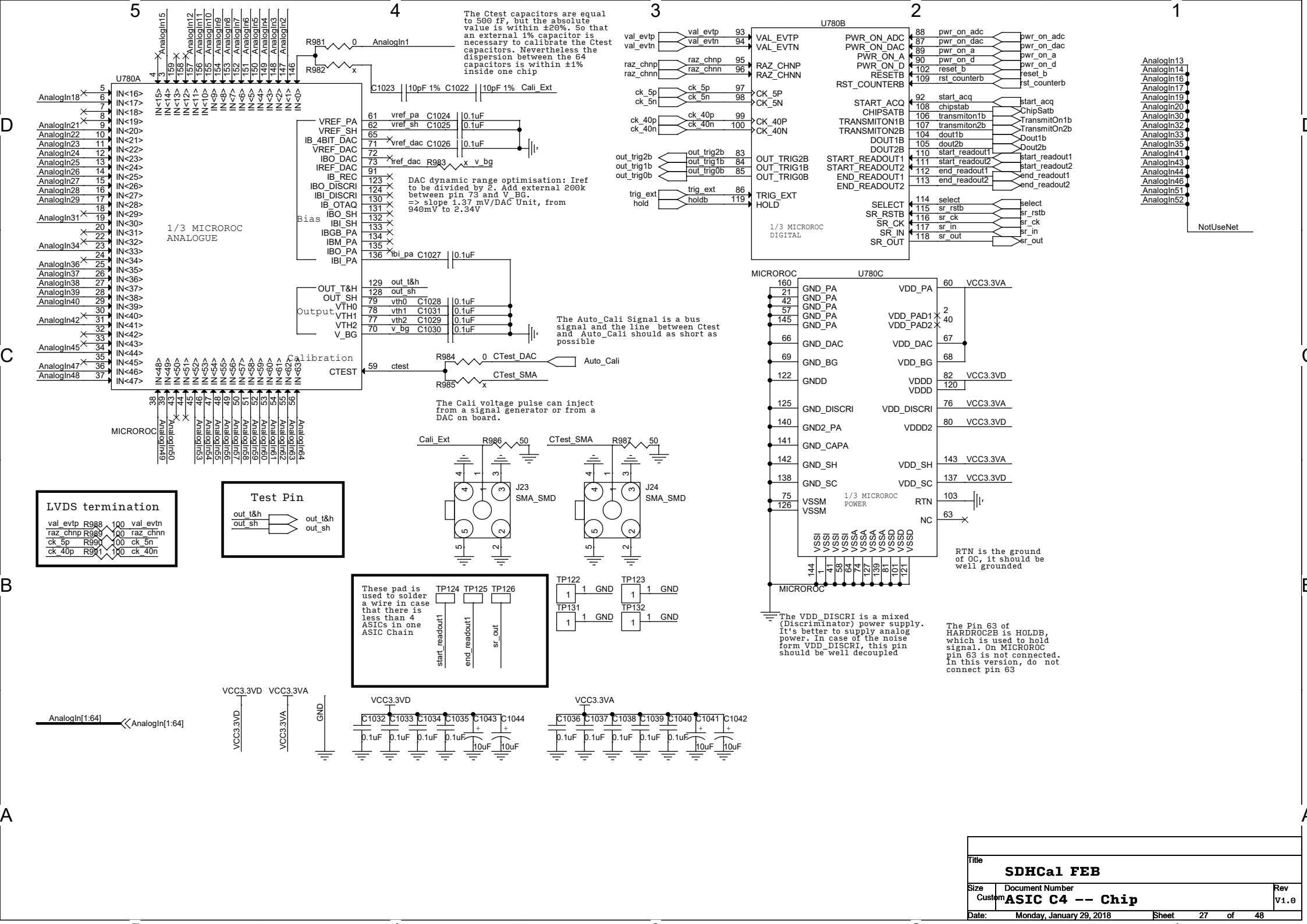

Title	SDHCal FEB
Size	Custom
Document Number	ASIC C4 -- Chip
Rev	V1.0
Date:	Monday, January 29, 2018
Sheet	27 of 48

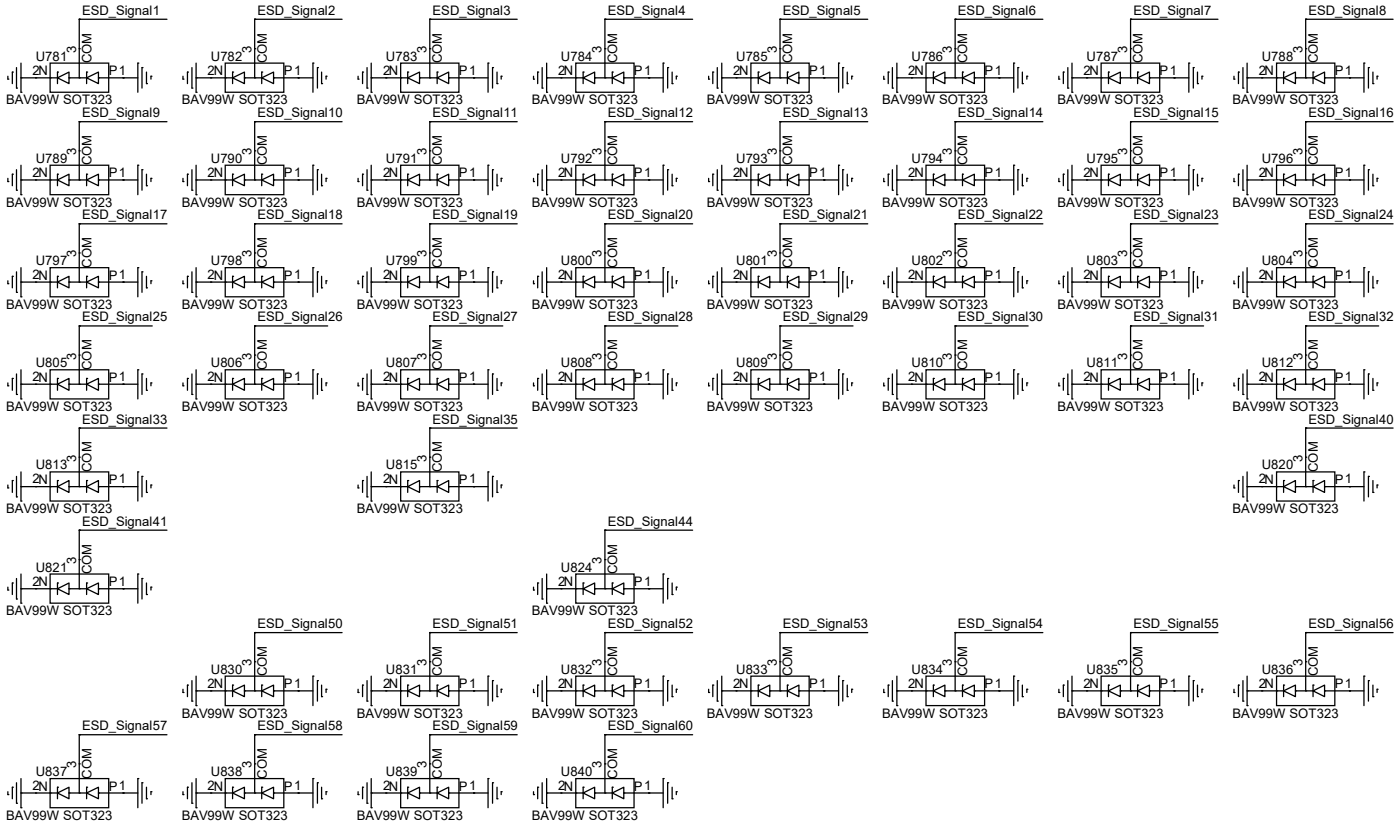

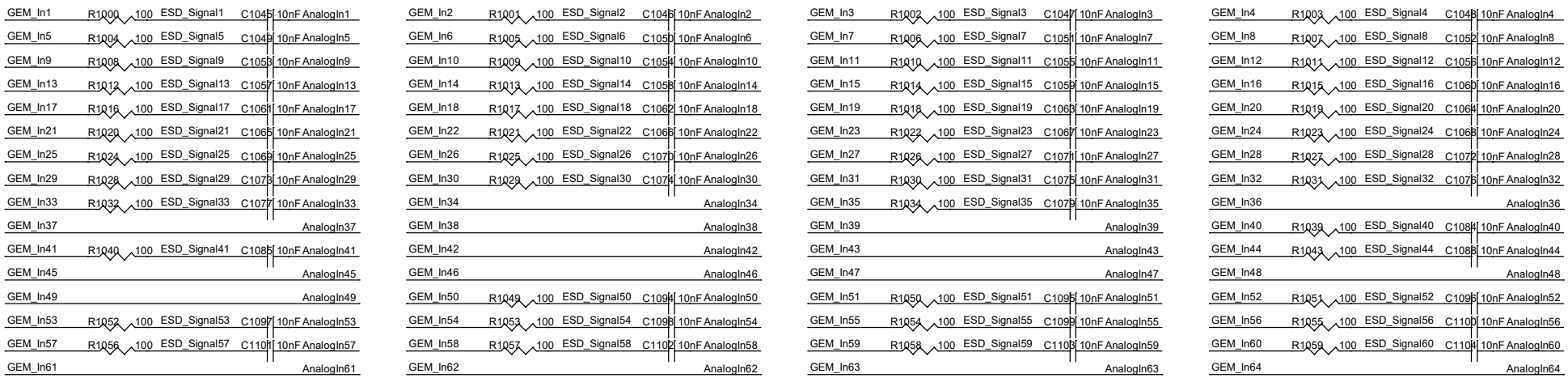

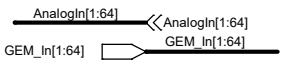

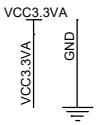

Title	SDHCal FEB	
Size: Custom	Document Number: ASIC D1 -- Analog In	Rev: V1.0
Date: Monday, January 29, 2018	Sheet 28 of 48	

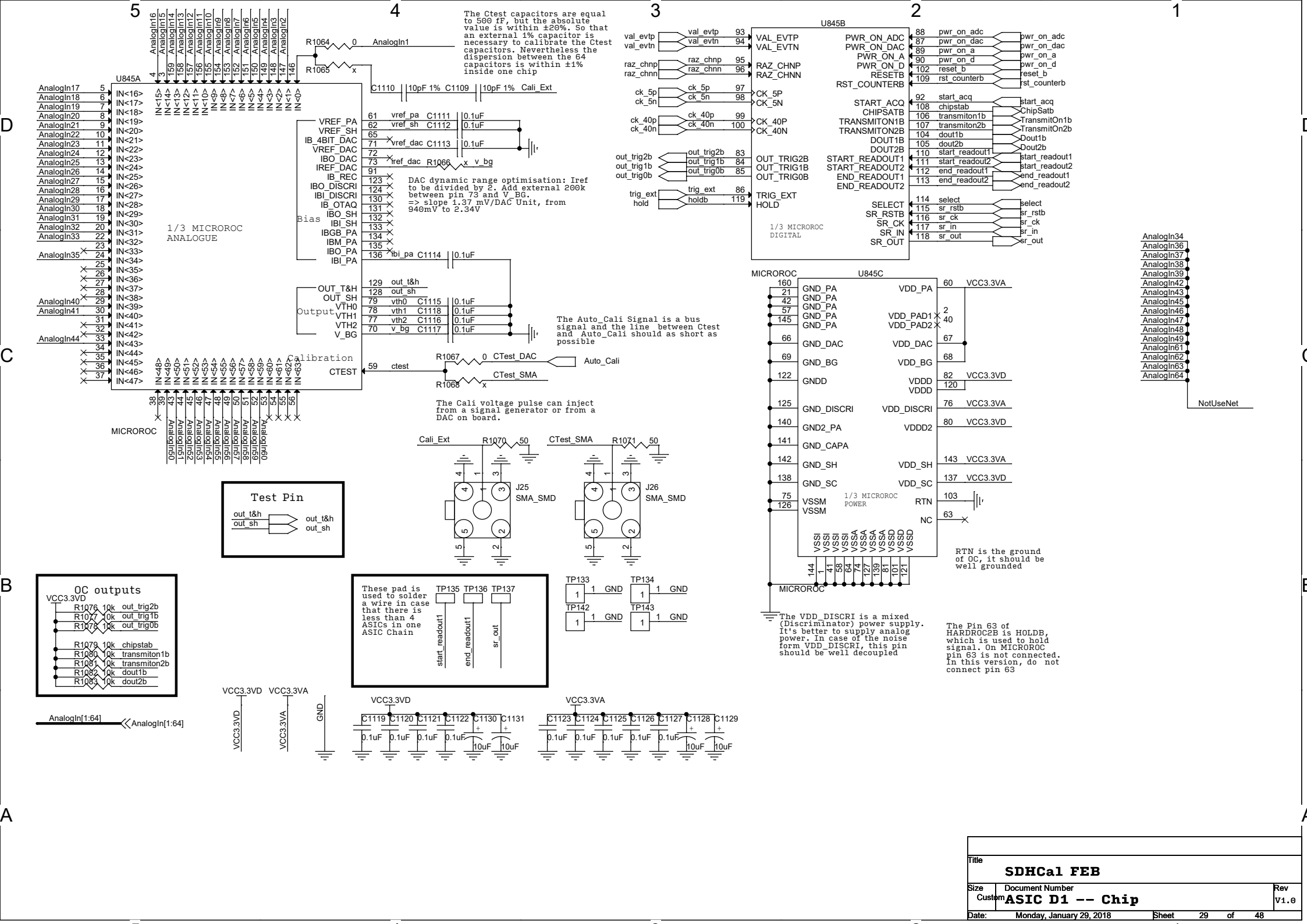

Title	SDHCal FEB		
Size: Custom	Document Number: ASIC D1 -- Chip		Rev: V1.0
Date: Monday, January 29, 2018	Sheet 29 of 48		

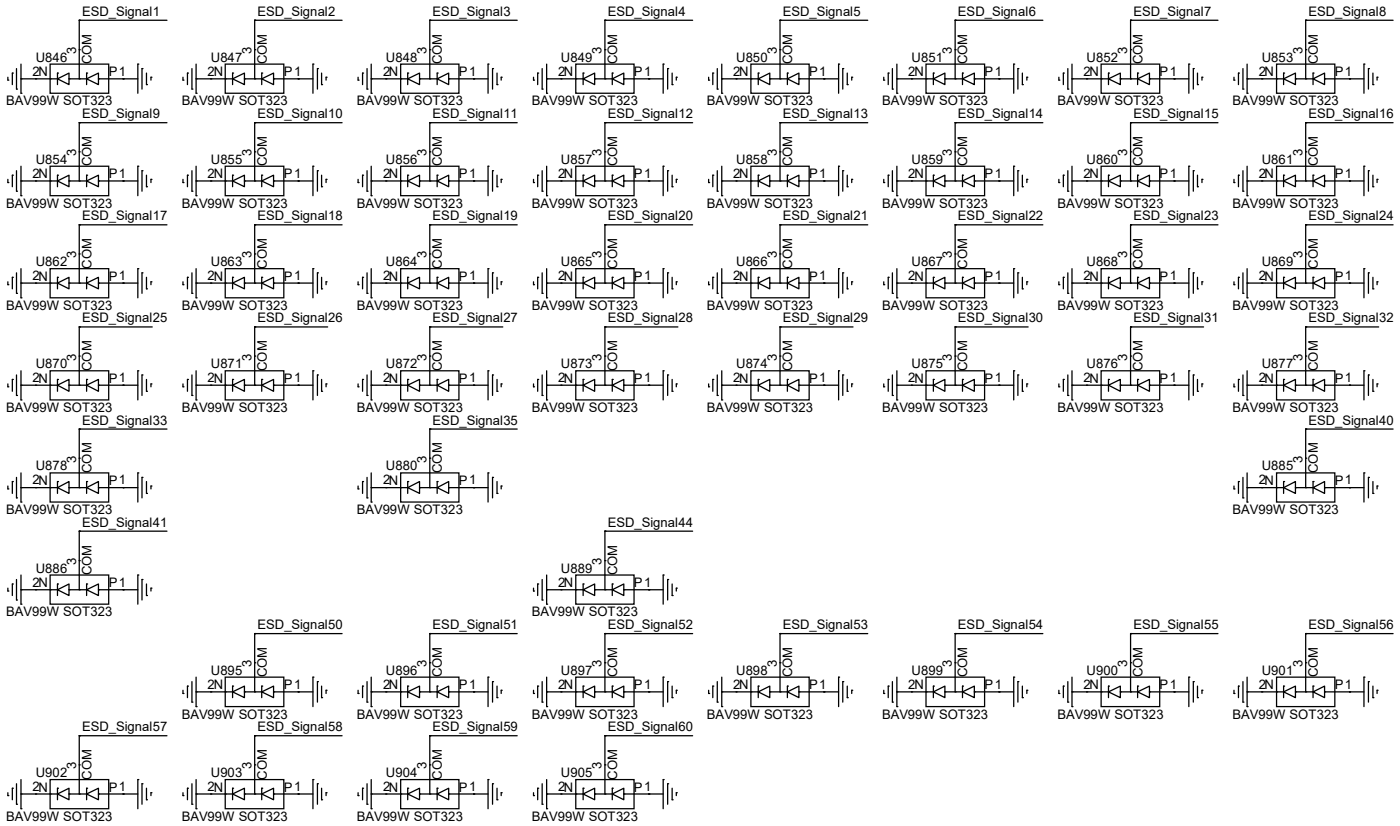

AnalogIn[1:64]
GEM_In[1:64]
AnalogIn[1:64]
GEM_In[1:64]

VCC3.3VA
VCC3.3VA
GND

GEM_In1 R1084 100 ESD_Signal1 C1132 10nF AnalogIn1
GEM_In5 R1088 100 ESD_Signal5 C1136 10nF AnalogIn5
GEM_In9 R1092 100 ESD_Signal9 C1140 10nF AnalogIn9
GEM_In13 R1096 100 ESD_Signal13 C1144 10nF AnalogIn13
GEM_In17 R1100 100 ESD_Signal17 C1148 10nF AnalogIn17
GEM_In21 R1104 100 ESD_Signal21 C1152 10nF AnalogIn21
GEM_In25 R1108 100 ESD_Signal25 C1156 10nF AnalogIn25
GEM_In29 R1112 100 ESD_Signal29 C1160 10nF AnalogIn29
GEM_In33 R1116 100 ESD_Signal33 C1164 10nF AnalogIn33
GEM_In37 AnalogIn37
GEM_In41 R1124 100 ESD_Signal41 C1172 10nF AnalogIn41
GEM_In45 AnalogIn45
GEM_In49 AnalogIn49
GEM_In53 R1136 100 ESD_Signal53 C1184 10nF AnalogIn53
GEM_In57 R1140 100 ESD_Signal57 C1188 10nF AnalogIn57
GEM_In61 AnalogIn61

GEM_In2 R1085 100 ESD_Signal2 C1133 10nF AnalogIn2
GEM_In6 R1089 100 ESD_Signal6 C1137 10nF AnalogIn6
GEM_In10 R1093 100 ESD_Signal10 C1141 10nF AnalogIn10
GEM_In14 R1097 100 ESD_Signal14 C1145 10nF AnalogIn14
GEM_In18 R1101 100 ESD_Signal18 C1149 10nF AnalogIn18
GEM_In22 R1105 100 ESD_Signal22 C1153 10nF AnalogIn22
GEM_In26 R1109 100 ESD_Signal26 C1157 10nF AnalogIn26
GEM_In30 R1113 100 ESD_Signal30 C1161 10nF AnalogIn30
GEM_In34 AnalogIn34
GEM_In38 AnalogIn38
GEM_In42 AnalogIn42
GEM_In46 AnalogIn46
GEM_In50 R1133 100 ESD_Signal50 C1181 10nF AnalogIn50
GEM_In54 R1137 100 ESD_Signal54 C1185 10nF AnalogIn54
GEM_In58 R1141 100 ESD_Signal58 C1189 10nF AnalogIn58
GEM_In62 AnalogIn62

GEM_In3 R1086 100 ESD_Signal3 C1134 10nF AnalogIn3
GEM_In7 R1090 100 ESD_Signal7 C1138 10nF AnalogIn7
GEM_In11 R1094 100 ESD_Signal11 C1142 10nF AnalogIn11
GEM_In15 R1098 100 ESD_Signal15 C1146 10nF AnalogIn15
GEM_In19 R1102 100 ESD_Signal19 C1150 10nF AnalogIn19
GEM_In23 R1106 100 ESD_Signal23 C1154 10nF AnalogIn23
GEM_In27 R1110 100 ESD_Signal27 C1158 10nF AnalogIn27
GEM_In31 R1114 100 ESD_Signal31 C1162 10nF AnalogIn31
GEM_In35 R1118 100 ESD_Signal35 C1166 10nF AnalogIn35
GEM_In39 AnalogIn39
GEM_In43 AnalogIn43
GEM_In47 AnalogIn47
GEM_In51 R1134 100 ESD_Signal51 C1182 10nF AnalogIn51
GEM_In55 R1138 100 ESD_Signal55 C1186 10nF AnalogIn55
GEM_In59 R1142 100 ESD_Signal59 C1190 10nF AnalogIn59
GEM_In63 AnalogIn63

GEM_In4 R1087 100 ESD_Signal4 C1135 10nF AnalogIn4
GEM_In8 R1091 100 ESD_Signal8 C1139 10nF AnalogIn8
GEM_In12 R1095 100 ESD_Signal12 C1143 10nF AnalogIn12
GEM_In16 R1099 100 ESD_Signal16 C1147 10nF AnalogIn16
GEM_In20 R1103 100 ESD_Signal20 C1151 10nF AnalogIn20
GEM_In24 R1107 100 ESD_Signal24 C1155 10nF AnalogIn24
GEM_In28 R1111 100 ESD_Signal28 C1159 10nF AnalogIn28
GEM_In32 R1115 100 ESD_Signal32 C1163 10nF AnalogIn32
GEM_In36 AnalogIn36
GEM_In40 R1123 100 ESD_Signal40 C1171 10nF AnalogIn40
GEM_In44 R1127 100 ESD_Signal44 C1175 10nF AnalogIn44
GEM_In48 AnalogIn48
GEM_In52 R1135 100 ESD_Signal52 C1183 10nF AnalogIn52
GEM_In56 R1139 100 ESD_Signal56 C1187 10nF AnalogIn56
GEM_In60 R1143 100 ESD_Signal60 C1191 10nF AnalogIn60
GEM_In64 AnalogIn64

Title	SDHCal FEB	
Size: Custom	Document Number: ASIC D2 -- Analog In	Rev: V1.0
Date: Monday, January 29, 2018	Sheet 30 of 48	

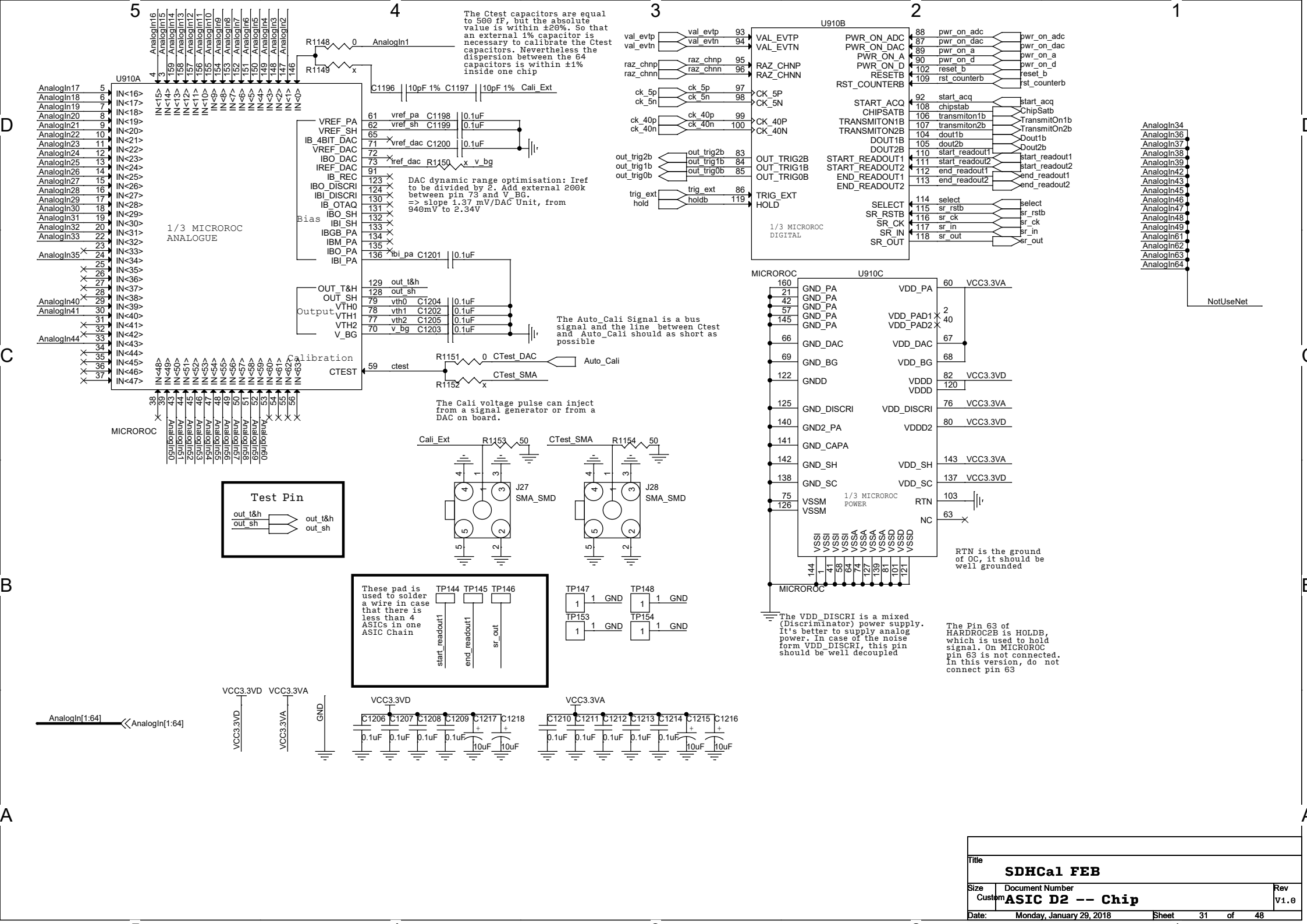
U910A
1/3 MICROROC ANALOGUE
MICROROC
Bias
Output
Calibration
U910B
1/3 MICROROC DIGITAL
U910C
1/3 MICROROC POWER
The Ctest capacitors are equal to 500 fF, but the absolute value is within ±20%. So that an external 1% capacitor is necessary to calibrate the Ctest capacitors. Nevertheless the dispersion between the 64 capacitors is within ±1% inside one chip
DAC dynamic range optimisation: Iref to be divided by 2. Add external 200k between pin 73 and V_BG. => slope 1.37 mV/DAC Unit, from 940mV to 2.34V
The Auto_Cali Signal is a bus signal and the line between Ctest and Auto_Cali should as short as possible
The Cali voltage pulse can inject from a signal generator or from a DAC on board.
Test Pin
These pad is used to solder a wire in case that there is less than 4 ASICs in one ASIC Chain
RTN is the ground of OC, it should be well grounded
The VDD_DISCRI is a mixed (Discriminator) power supply. It's better to supply analog power. In case of the noise form VDD_DISCRI, this pin should be well decoupled
The Pin 63 of HARDROC2B is HOLDB, which is used to hold signal. On MICROROC pin 63 is not connected. In this version, do not connect pin 63
NotUseNet
Title
SDHCal FEB
Size
Custom
Document Number
ASIC D2 -- Chip
Rev
V1.0
Date:
Monday, January 29, 2018
Sheet
31
of
48

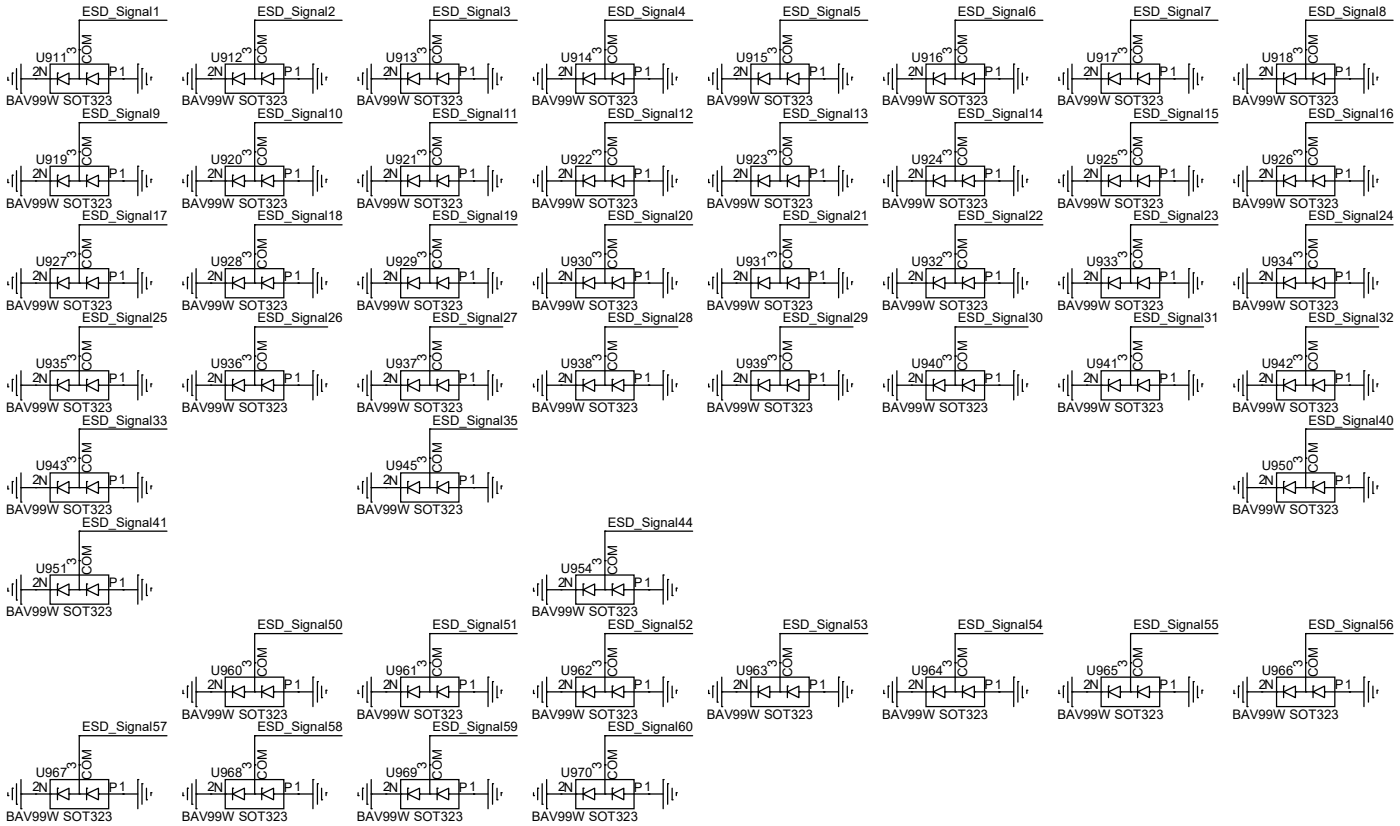

AnalogIn[1:64]

AnalogIn[1:64]

GEM_In[1:64]

GEM_In[1:64]

VCC3.3VA

VCC3.3VA

GND

GEM_In1	R1167 100	ESD_Signal1	C1219 10nF	AnalogIn1	GEM_In2	R1168 100	ESD_Signal2	C1220 10nF	AnalogIn2
GEM_In5	R1171 100	ESD_Signal5	C1223 10nF	AnalogIn5	GEM_In6	R1172 100	ESD_Signal6	C1224 10nF	AnalogIn6
GEM_In9	R1175 100	ESD_Signal9	C1227 10nF	AnalogIn9	GEM_In10	R1176 100	ESD_Signal10	C1228 10nF	AnalogIn10
GEM_In13	R1179 100	ESD_Signal13	C1231 10nF	AnalogIn13	GEM_In14	R1180 100	ESD_Signal14	C1232 10nF	AnalogIn14
GEM_In17	R1183 100	ESD_Signal17	C1235 10nF	AnalogIn17	GEM_In18	R1184 100	ESD_Signal18	C1236 10nF	AnalogIn18
GEM_In21	R1187 100	ESD_Signal21	C1239 10nF	AnalogIn21	GEM_In22	R1188 100	ESD_Signal22	C1240 10nF	AnalogIn22
GEM_In25	R1191 100	ESD_Signal25	C1243 10nF	AnalogIn25	GEM_In26	R1192 100	ESD_Signal26	C1244 10nF	AnalogIn26
GEM_In29	R1195 100	ESD_Signal29	C1247 10nF	AnalogIn29	GEM_In30	R1196 100	ESD_Signal30	C1248 10nF	AnalogIn30
GEM_In33	R1199 100	ESD_Signal33	C1251 10nF	AnalogIn33	GEM_In34				AnalogIn34
GEM_In37				AnalogIn37	GEM_In38				AnalogIn38
GEM_In41	R1207 100	ESD_Signal41	C1259 10nF	AnalogIn41	GEM_In42				AnalogIn42
GEM_In45				AnalogIn45	GEM_In46				AnalogIn46
GEM_In49				AnalogIn49	GEM_In50	R1216 100	ESD_Signal50	C1268 10nF	AnalogIn50
GEM_In53	R1219 100	ESD_Signal53	C1271 10nF	AnalogIn53	GEM_In54	R1220 100	ESD_Signal54	C1272 10nF	AnalogIn54
GEM_In57	R1223 100	ESD_Signal57	C1275 10nF	AnalogIn57	GEM_In58	R1224 100	ESD_Signal58	C1276 10nF	AnalogIn58
GEM_In61				AnalogIn61	GEM_In62				AnalogIn62

GEM_In3	R1169 100	ESD_Signal3	C1221 10nF	AnalogIn3	GEM_In4	R1170 100	ESD_Signal4	C1222 10nF	AnalogIn4
GEM_In7	R1173 100	ESD_Signal7	C1225 10nF	AnalogIn7	GEM_In8	R1174 100	ESD_Signal8	C1226 10nF	AnalogIn8
GEM_In11	R1177 100	ESD_Signal11	C1229 10nF	AnalogIn11	GEM_In12	R1178 100	ESD_Signal12	C1230 10nF	AnalogIn12
GEM_In15	R1181 100	ESD_Signal15	C1233 10nF	AnalogIn15	GEM_In16	R1182 100	ESD_Signal16	C1234 10nF	AnalogIn16
GEM_In19	R1185 100	ESD_Signal19	C1237 10nF	AnalogIn19	GEM_In20	R1186 100	ESD_Signal20	C1238 10nF	AnalogIn20
GEM_In23	R1189 100	ESD_Signal23	C1241 10nF	AnalogIn23	GEM_In24	R1190 100	ESD_Signal24	C1242 10nF	AnalogIn24
GEM_In27	R1193 100	ESD_Signal27	C1245 10nF	AnalogIn27	GEM_In28	R1194 100	ESD_Signal28	C1246 10nF	AnalogIn28
GEM_In31	R1197 100	ESD_Signal31	C1249 10nF	AnalogIn31	GEM_In32	R1198 100	ESD_Signal32	C1250 10nF	AnalogIn32
GEM_In35	R1201 100	ESD_Signal35	C1253 10nF	AnalogIn35	GEM_In36				AnalogIn36
GEM_In39				AnalogIn39	GEM_In40	R1206 100	ESD_Signal40	C1258 10nF	AnalogIn40
GEM_In43				AnalogIn43	GEM_In44	R1210 100	ESD_Signal44	C1262 10nF	AnalogIn44
GEM_In47				AnalogIn47	GEM_In48				AnalogIn48
GEM_In51	R1217 100	ESD_Signal51	C1269 10nF	AnalogIn51	GEM_In52	R1218 100	ESD_Signal52	C1270 10nF	AnalogIn52
GEM_In55	R1221 100	ESD_Signal55	C1273 10nF	AnalogIn55	GEM_In56	R1222 100	ESD_Signal56	C1274 10nF	AnalogIn56
GEM_In59	R1225 100	ESD_Signal59	C1277 10nF	AnalogIn59	GEM_In60	R1226 100	ESD_Signal60	C1278 10nF	AnalogIn60
GEM_In63				AnalogIn63	GEM_In64				AnalogIn64

Title	SDHCal FEB	
Size: Custom	Document Number: ASIC D3 -- Analog In	Rev: V1.0
Date: Monday, January 29, 2018	Sheet 32 of 48	

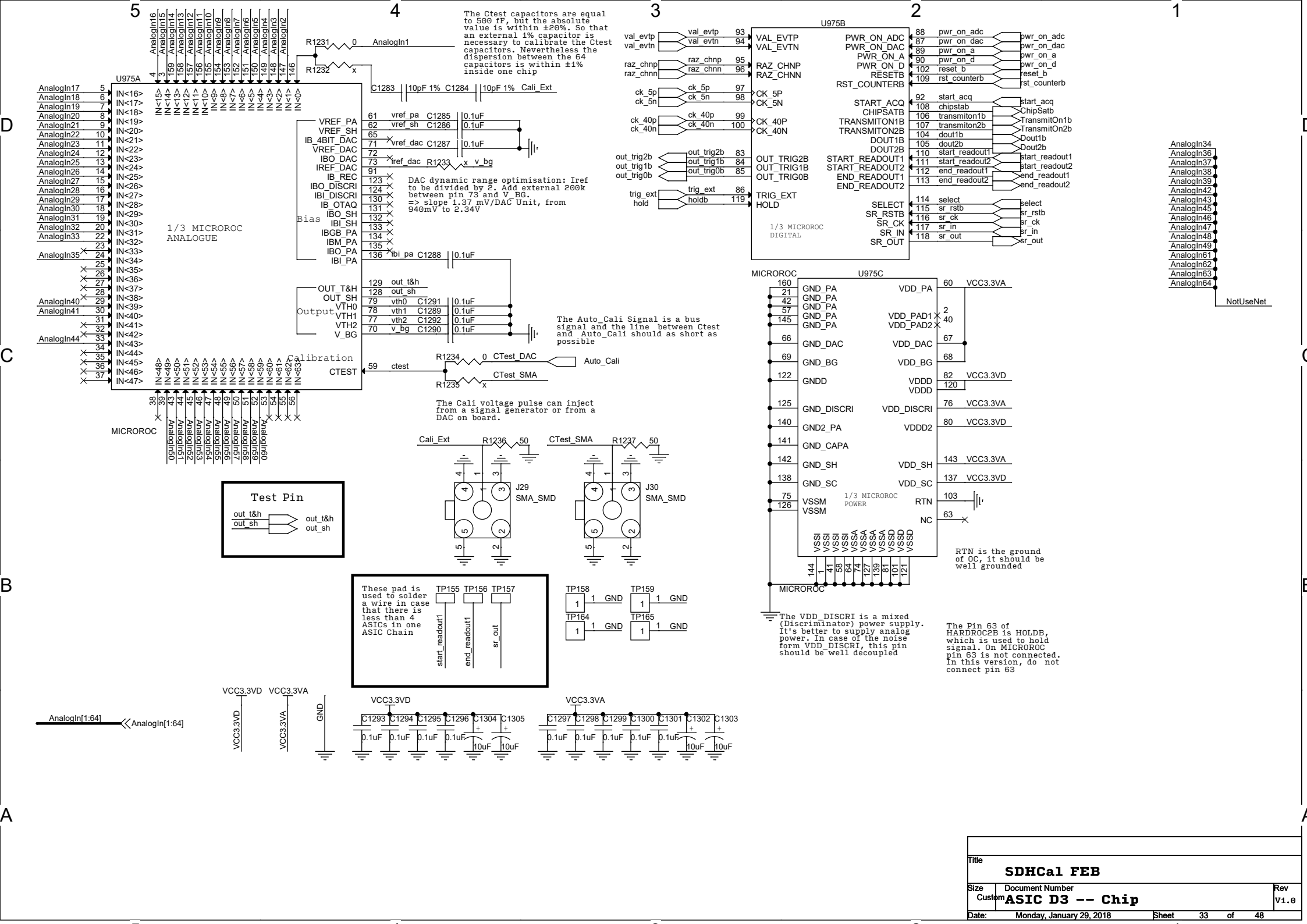

Title	SDHCal FEB
Size	Custom
Document Number	ASIC D3 -- Chip
Rev	V1.0
Date:	Monday, January 29, 2018
Sheet	33 of 48

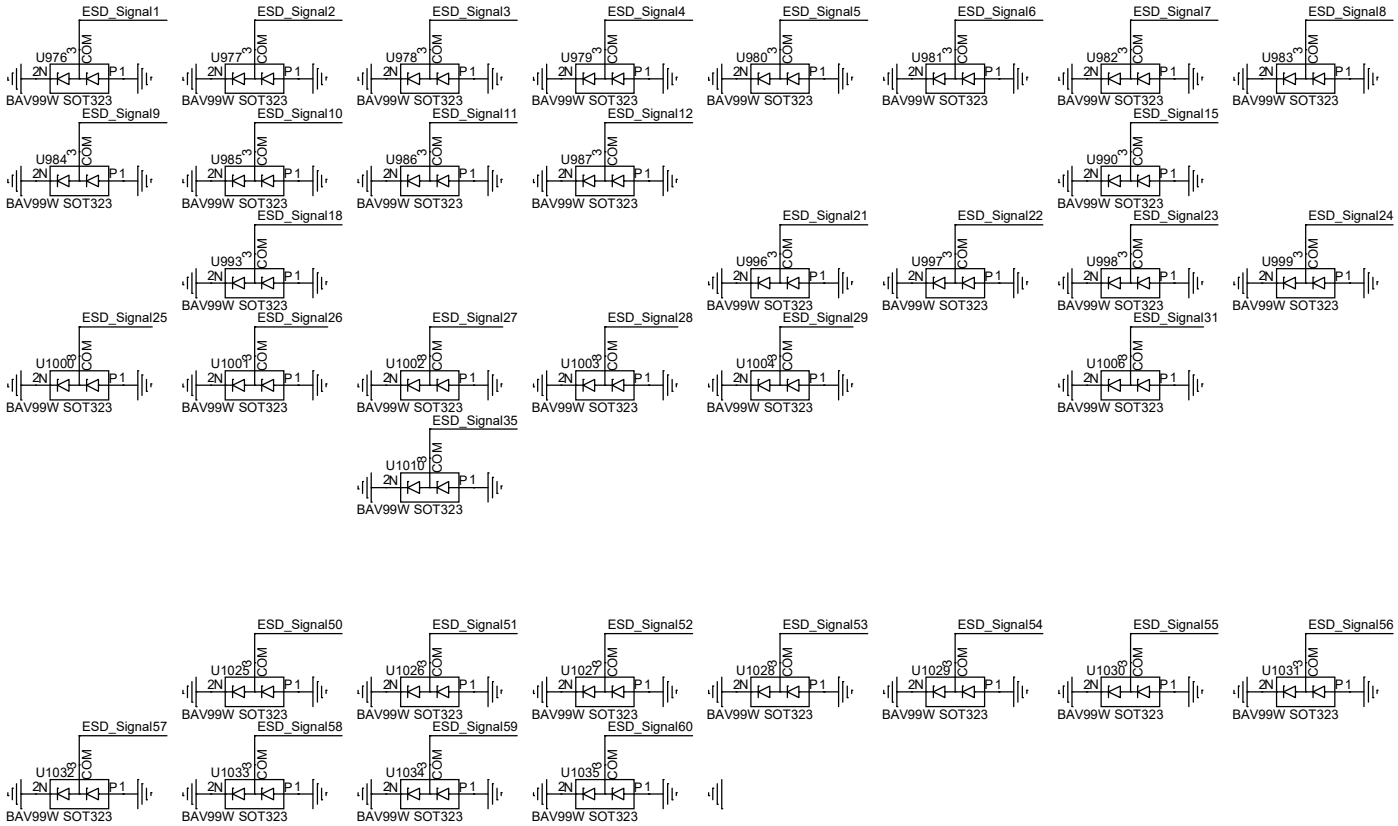

AnalogIn[1:64]

AnalogIn[1:64]

GEM_In[1:64]

GEM_In[1:64]

VCC3.3VA

VCC3.3VA

GND

GEM_In1 R1250 100 ESD_Signal1 C1306 10nF AnalogIn1
GEM_In5 R1254 100 ESD_Signal5 C1310 10nF AnalogIn5
GEM_In9 R1258 100 ESD_Signal9 C1314 10nF AnalogIn9
GEM_In13 AnalogIn13
GEM_In17 AnalogIn17
GEM_In21 R1270 100 ESD_Signal21 C1326 10nF AnalogIn21
GEM_In25 R1274 100 ESD_Signal25 C1330 10nF AnalogIn25
GEM_In29 R1278 100 ESD_Signal29 C1334 10nF AnalogIn29
GEM_In33 AnalogIn33
GEM_In37 AnalogIn37
GEM_In41 AnalogIn41
GEM_In45 AnalogIn45
GEM_In49 AnalogIn49
GEM_In53 R1302 100 ESD_Signal53 C1358 10nF AnalogIn53
GEM_In57 R1306 100 ESD_Signal57 C1362 10nF AnalogIn57
GEM_In61 AnalogIn61

GEM_In2 R1251 100 ESD_Signal2 C1307 10nF AnalogIn2
GEM_In6 R1255 100 ESD_Signal6 C1311 10nF AnalogIn6
GEM_In10 R1259 100 ESD_Signal10 C1315 10nF AnalogIn10
GEM_In14 AnalogIn14
GEM_In18 R1267 100 ESD_Signal18 C1323 10nF AnalogIn18
GEM_In22 R1271 100 ESD_Signal22 C1327 10nF AnalogIn22
GEM_In26 R1275 100 ESD_Signal26 C1331 10nF AnalogIn26
GEM_In30 AnalogIn30
GEM_In34 AnalogIn34
GEM_In38 AnalogIn38
GEM_In42 AnalogIn42
GEM_In46 AnalogIn46
GEM_In50 R1299 100 ESD_Signal50 C1355 10nF AnalogIn50
GEM_In54 R1303 100 ESD_Signal54 C1359 10nF AnalogIn54
GEM_In58 R1307 100 ESD_Signal58 C1363 10nF AnalogIn58
GEM_In62 AnalogIn62

GEM_In3 R1252 100 ESD_Signal3 C1308 10nF AnalogIn3
GEM_In7 R1256 100 ESD_Signal7 C1312 10nF AnalogIn7
GEM_In11 R1260 100 ESD_Signal11 C1316 10nF AnalogIn11
GEM_In15 R1264 100 ESD_Signal15 C1320 10nF AnalogIn15
GEM_In19 AnalogIn19
GEM_In23 R1272 100 ESD_Signal23 C1328 10nF AnalogIn23
GEM_In27 R1276 100 ESD_Signal27 C1332 10nF AnalogIn27
GEM_In31 R1280 100 ESD_Signal31 C1336 10nF AnalogIn31
GEM_In35 R1284 100 ESD_Signal35 C1340 10nF AnalogIn35
GEM_In39 AnalogIn39
GEM_In43 AnalogIn43
GEM_In47 AnalogIn47
GEM_In51 R1300 100 ESD_Signal51 C1356 10nF AnalogIn51
GEM_In55 R1304 100 ESD_Signal55 C1360 10nF AnalogIn55
GEM_In59 R1308 100 ESD_Signal59 C1364 10nF AnalogIn59
GEM_In63 AnalogIn63

GEM_In4 R1253 100 ESD_Signal4 C1309 10nF AnalogIn4
GEM_In8 R1257 100 ESD_Signal8 C1313 10nF AnalogIn8
GEM_In12 R1261 100 ESD_Signal12 C1317 10nF AnalogIn12
GEM_In16 AnalogIn16
GEM_In20 AnalogIn20
GEM_In24 R1273 100 ESD_Signal24 C1329 10nF AnalogIn24
GEM_In28 R1277 100 ESD_Signal28 C1333 10nF AnalogIn28
GEM_In32 AnalogIn32
GEM_In36 AnalogIn36
GEM_In40 AnalogIn40
GEM_In44 AnalogIn44
GEM_In48 AnalogIn48
GEM_In52 R1301 100 ESD_Signal52 C1357 10nF AnalogIn52
GEM_In56 R1305 100 ESD_Signal56 C1361 10nF AnalogIn56
GEM_In60 R1309 100 ESD_Signal60 C1365 10nF AnalogIn60
GEM_In64 AnalogIn64

Title	SDHCal FEB	
Size: Custom	Document Number: ASIC D4 -- Analog In	Rev: V1.0
Date: Monday, January 29, 2018	Sheet 34 of 48	

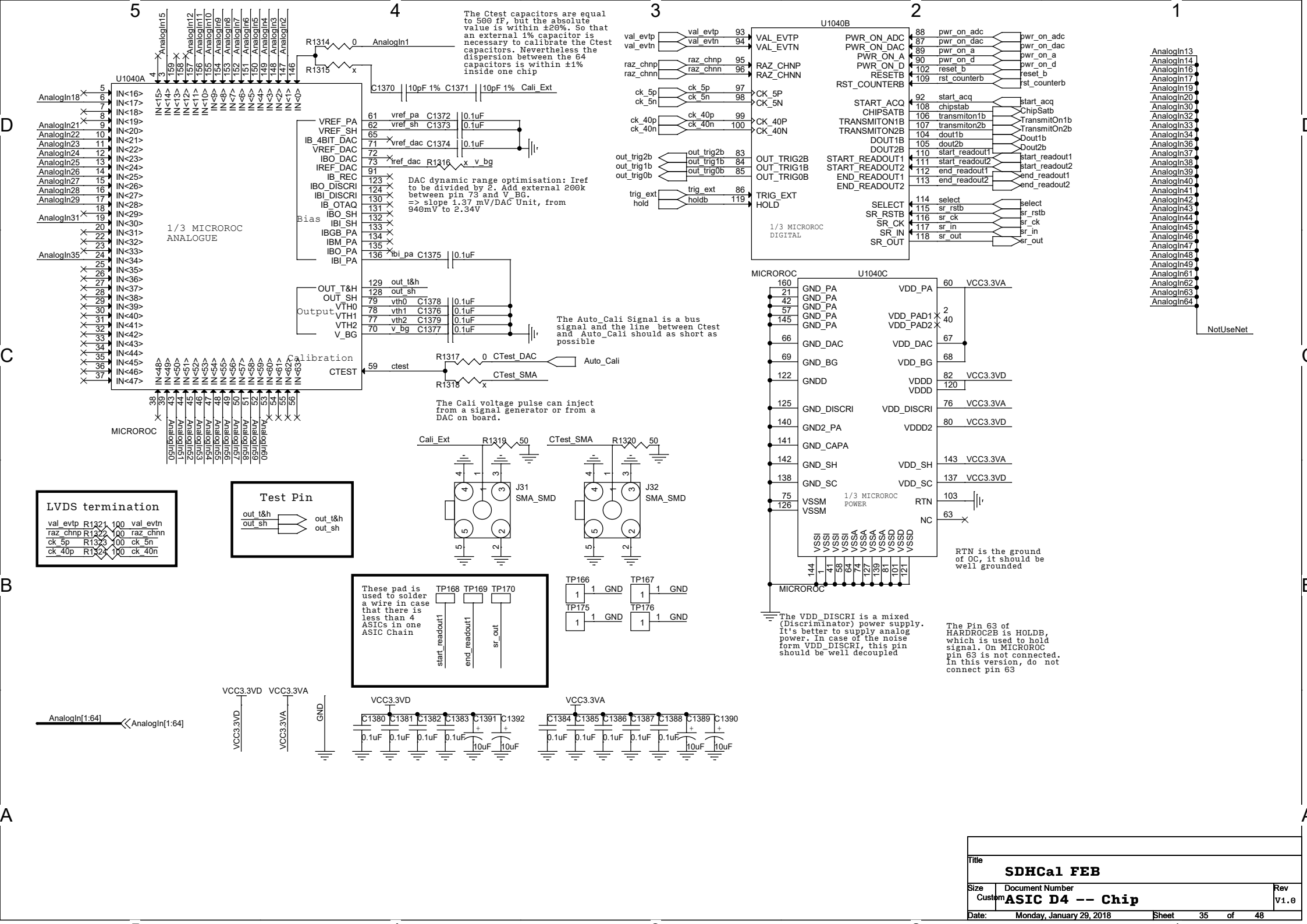
U1040A
1/3 MICROROC ANALOGUE
MICROROC
Bias
Output
Calibration
U1040B
1/3 MICROROC DIGITAL
U1040C
1/3 MICROROC POWER
The Ctest capacitors are equal to 500 fF, but the absolute value is within ±20%. So that an external 1% capacitor is necessary to calibrate the Ctest capacitors. Nevertheless the dispersion between the 64 capacitors is within ±1% inside one chip
DAC dynamic range optimisation: Iref to be divided by 2. Add external 200k between pin 73 and V_BG. => slope 1.37 mV/DAC Unit, from 940mV to 2.34V
The Auto_Cali Signal is a bus signal and the line between Ctest and Auto_Cali should as short as possible
The Cali voltage pulse can inject from a signal generator or from a DAC on board.
LVDS termination
Test Pin
These pad is used to solder a wire in case that there is less than 4 ASICs in one ASIC Chain
RTN is the ground of OC, it should be well grounded
The VDD_DISCRI is a mixed (Discriminator) power supply. It's better to supply analog power. In case of the noise form VDD_DISCRI, this pin should be well decoupled
The Pin 63 of HARDROC2B is HOLDB, which is used to hold signal. On MICROROC pin 63 is not connected. In this version, do not connect pin 63
NotUseNet
Title
SDHCal FEB
Size
Custom
Document Number
ASIC D4 -- Chip
Rev
V1.0
Date:
Monday, January 29, 2018
Sheet
35
of
48

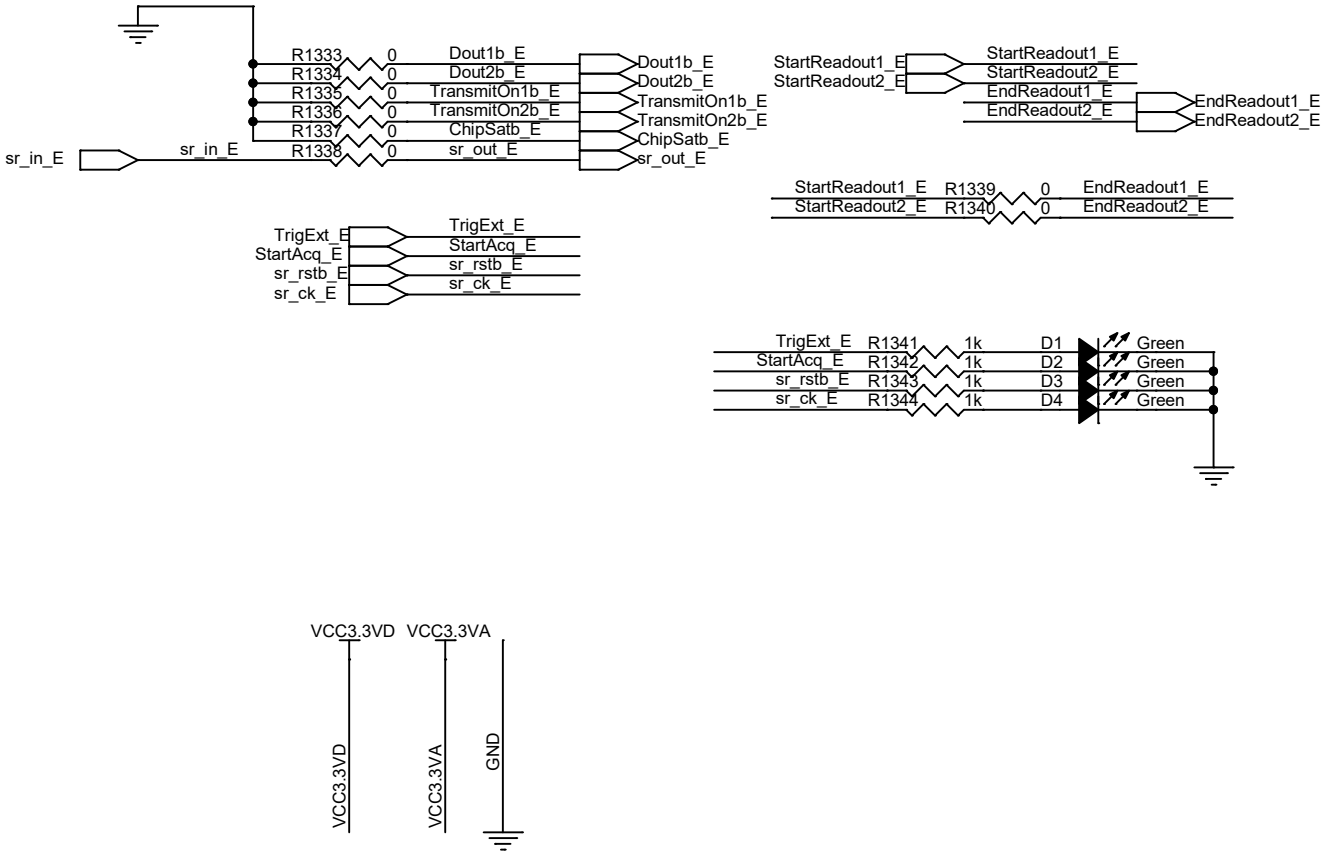

Title	SDHCal FEB
Size	A4
Document Number	ASIC E Reserved
Rev	V1.0
Date:	Monday, January 29, 2018
Sheet	36 of 48

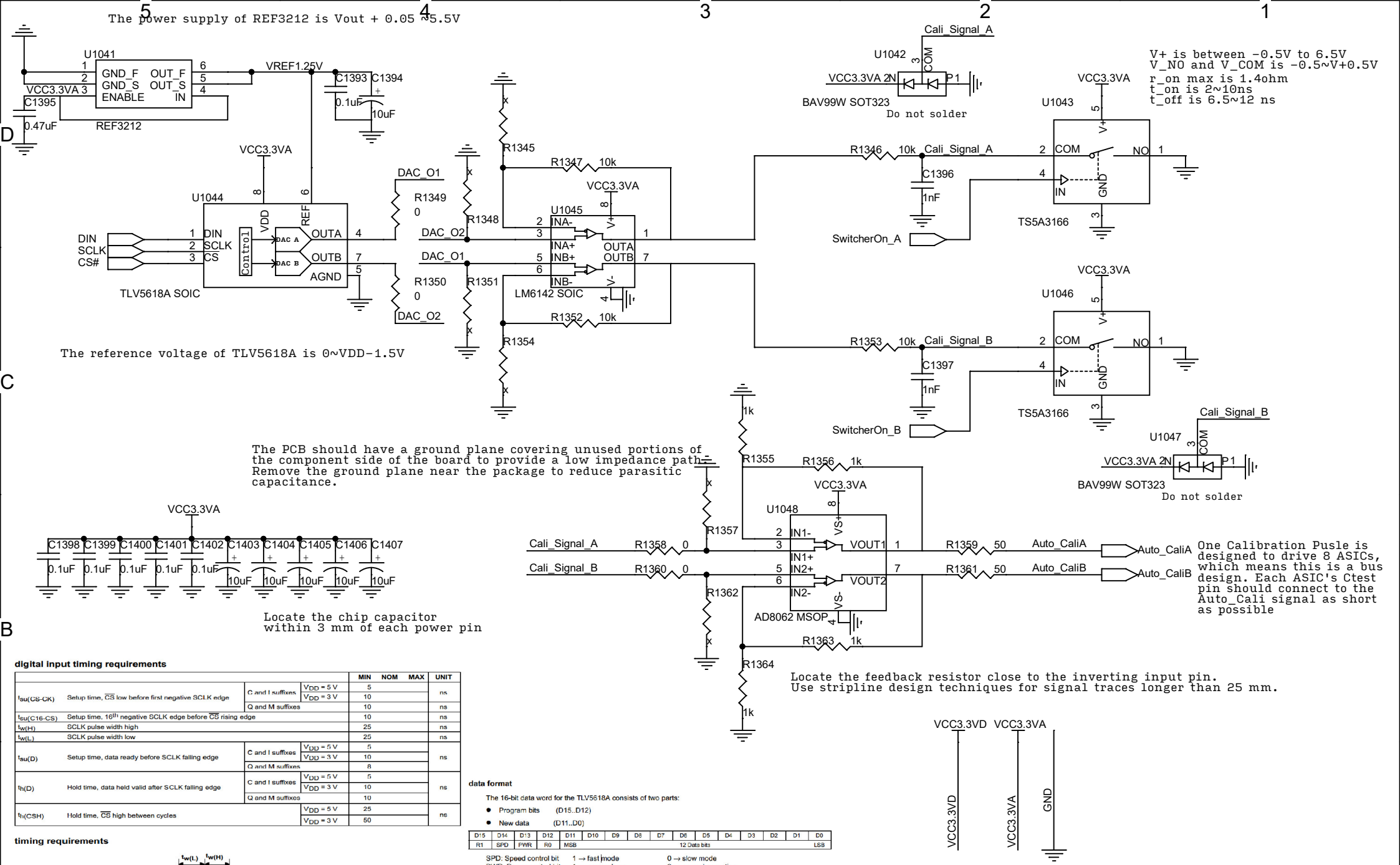
The power supply of REF3212 is Vout + 0.05 ~5.5V

The reference voltage of TLV5618A is 0~VDD-1.5V

Do not solder
V+ is between -0.5V to 6.5V
V_NO and V_COM is -0.5~V+0.5V
r_on max is 1.4ohm
t_on is 2~10ns
t_off is 6.5~12 ns

Do not solder
The PCB should have a ground plane covering unused portions of the component side of the board to provide a low impedance path. Remove the ground plane near the package to reduce parasitic capacitance.

Locate the chip capacitor within 3 mm of each power pin

One Calibration Pusle is designed to drive 8 ASICs, which means this is a bus design. Each ASIC's Ctest pin should connect to the Auto_Cali signal as short as possible
Locate the feedback resistor close to the inverting input pin. Use stripline design techniques for signal traces longer than 25 mm.

digital input timing requirements

				MIN	NOM	MAX	UNIT
$t_{su(CS-CK)}$	Setup time, $\overline{CS}$ low before first negative SCLK edge	C and I suffixes	V_{DD} = 5 V	5			ns
			V_{DD} = 3 V	10			
		Q and M suffixes		10			ns
$t_{su(C16-CS)}$	Setup time, 16th negative SCLK edge before $\overline{CS}$ rising edge			10			ns
$t_{w(H)}$	SCLK pulse width high			25			ns
$t_{w(L)}$	SCLK pulse width low			25			ns
$t_{su(D)}$	Setup time, data ready before SCLK falling edge	C and I suffixes	V_{DD} = 5 V	5			ns
			V_{DD} = 3 V	10			
		Q and M suffixes		8			
$t_{h(D)}$	Hold time, data held valid after SCLK falling edge	C and I suffixes	V_{DD} = 5 V	5			ns
			V_{DD} = 3 V	10			
		Q and M suffixes		10			
$t_{h(CSH)}$	Hold time, $\overline{CS}$ high between cycles		V_{DD} = 5 V	25			ns
			V_{DD} = 3 V	50			

timing requirements

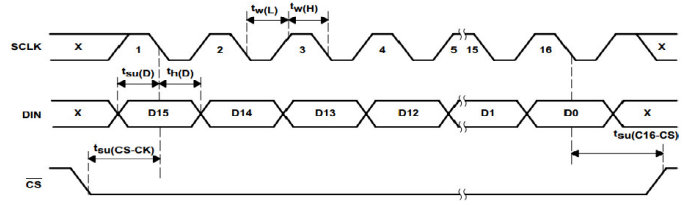

data format

The 16-bit data word for the TLV5618A consists of two parts:

- Program bits (D15..D12)
- New data (D11..D0)

D15	D14	D13	D12	D11	D10	D9	D8	D7	D6	D5	D4	D3	D2	D1	D0
R1	SPD	PWR	R0	MSB					12 Data bits						LSB

SPD: Speed control bit 1 → fast mode 0 → slow mode
PWR: Power control bit 1 → power down 0 → normal operation
On power up, SPD and PWD are reset to 0 (slow mode and normal operation)

The following table lists all possible combinations of register-select bits:

register-select bits

R1	R0	REGISTER
0	0	Write data to DAC B and BUFFER
0	1	Write data to BUFFER
1	0	Write data to DAC A and update DAC B with BUFFER content
1	1	Reserved

The meaning of the 12 data bits depends on the register. If one of the DAC registers or the BUFFER is selected, then the 12 data bits determine the new DAC value:

Title	SDHCal FEB	
Size A4	Document Number Auto Calibration	Rev V1.0
Date: Monday, January 29, 2018	Sheet 37 of 48	

There are 4 kind of signal that need to be distributed.
LVDS signal, Single signal for each chain, Single signal every chain shared and test signal.
For LVDS signal, use LVDS buffer to drive the origin signal into 4 and connect to each chain.
Signal signal for each chain connect to each chain directly
Use logic buffer to drive the shared signal to every chain.
The test signal is switched by switches

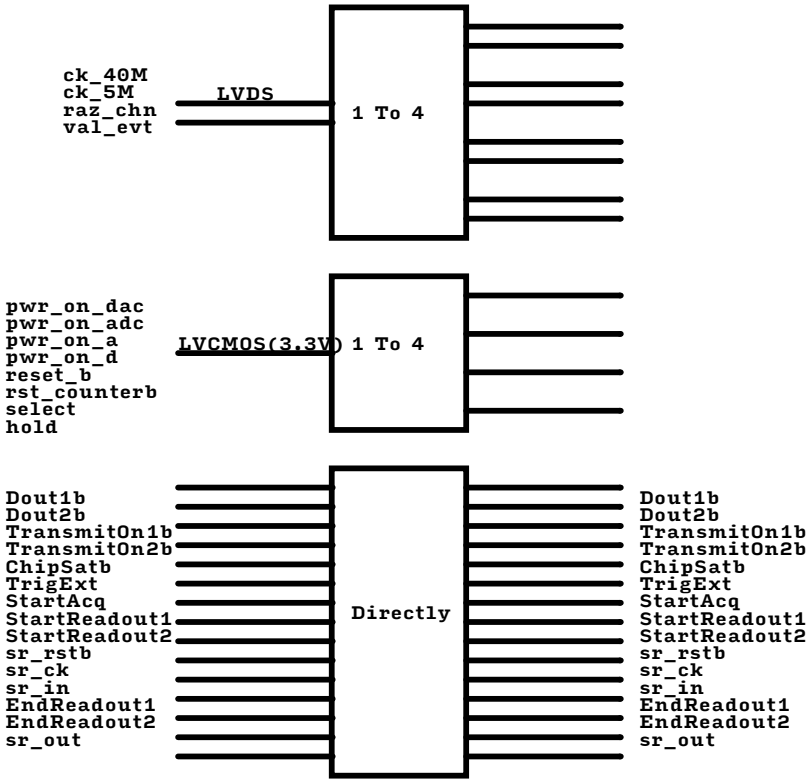

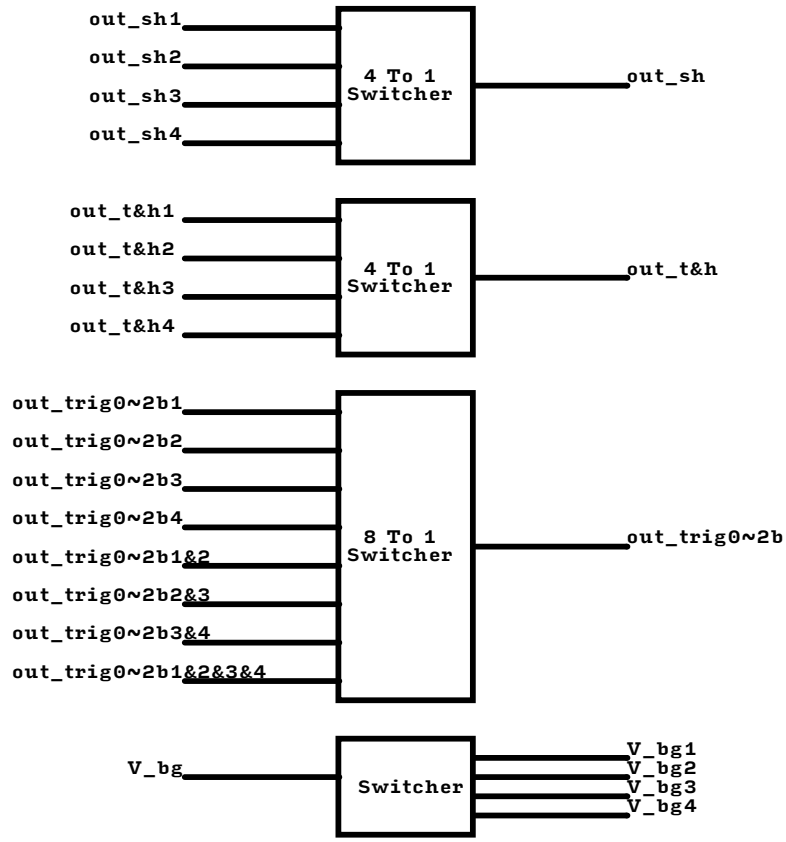

Title: SDHCal FEB		
Size: A4	Document Number: Signal Distributor Read Me	Rev: V1.0
Date: Monday, January 29, 2018	Sheet 38 of 48	

The B pins is forward to the innerside of board

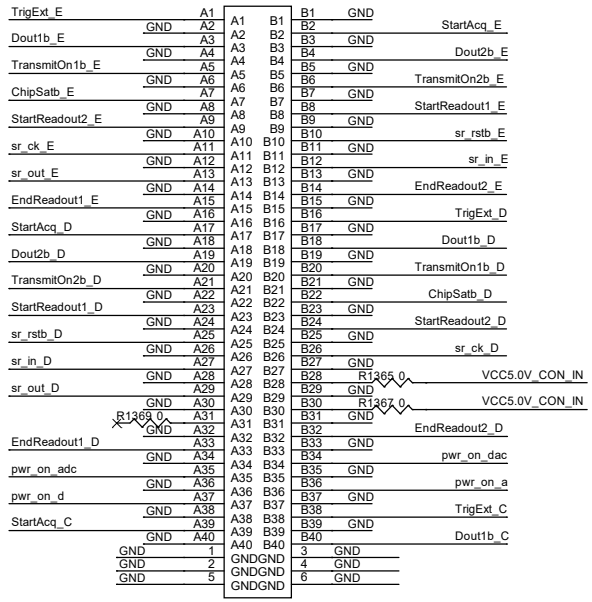

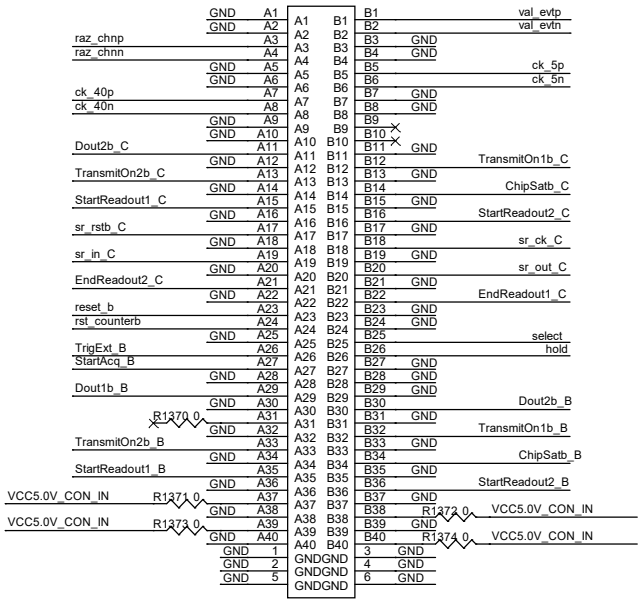

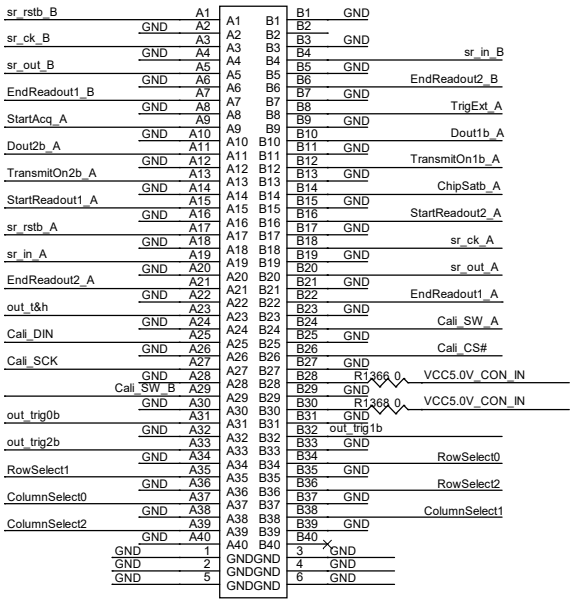

! ! ! **Warnning: The male connector and female connector has different footprint and package.**
The A1 pin of male connector is connected to the A1 pin of female connector, B1(male) connect to B1(female) ...
Note that this is different from ECal system but the signal connection is the same.

Female connector ERNI154744 on FEB
Male connector ERNI 154767 on DIF

Row and Column select:
6 pins

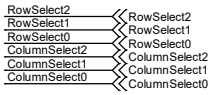

Common control signal:
8 pins

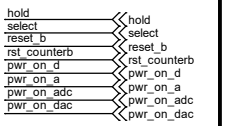

Test signal:
4 pins

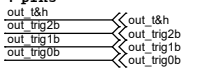

Calibration control:
5 pins

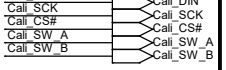

LVDS signals:
4 pairs 8pins

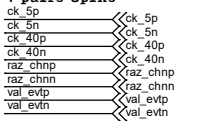

Independent control signals for each chain:
15*5 = 75 pins

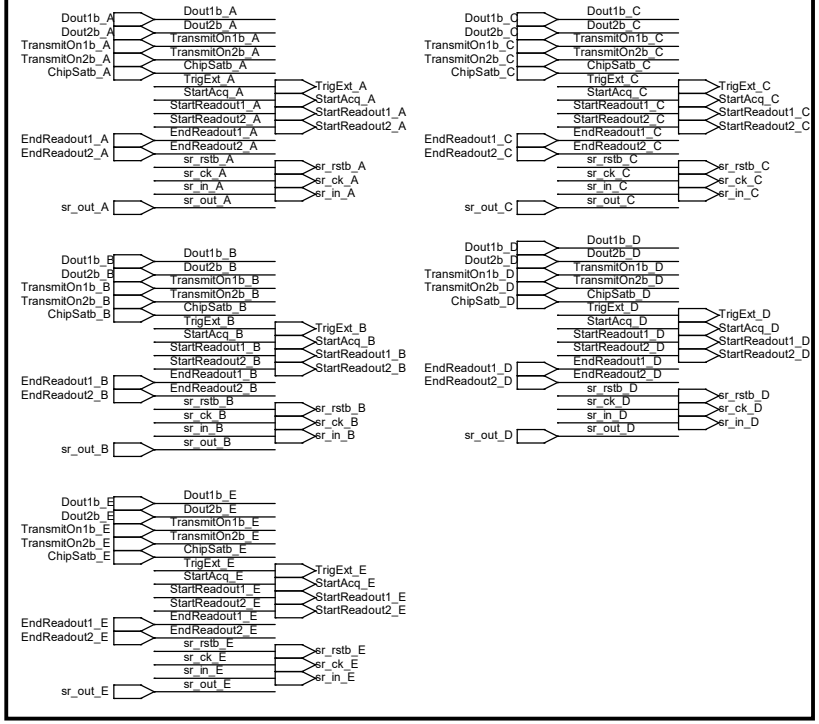

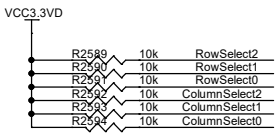

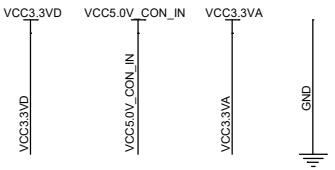

Title: **SDHCal FEB**			
Size: A3	Document Number: **Interface To DAQ**		Rev: V1.0
Date: Monday, January 29, 2018	Sheet 39 of 48		

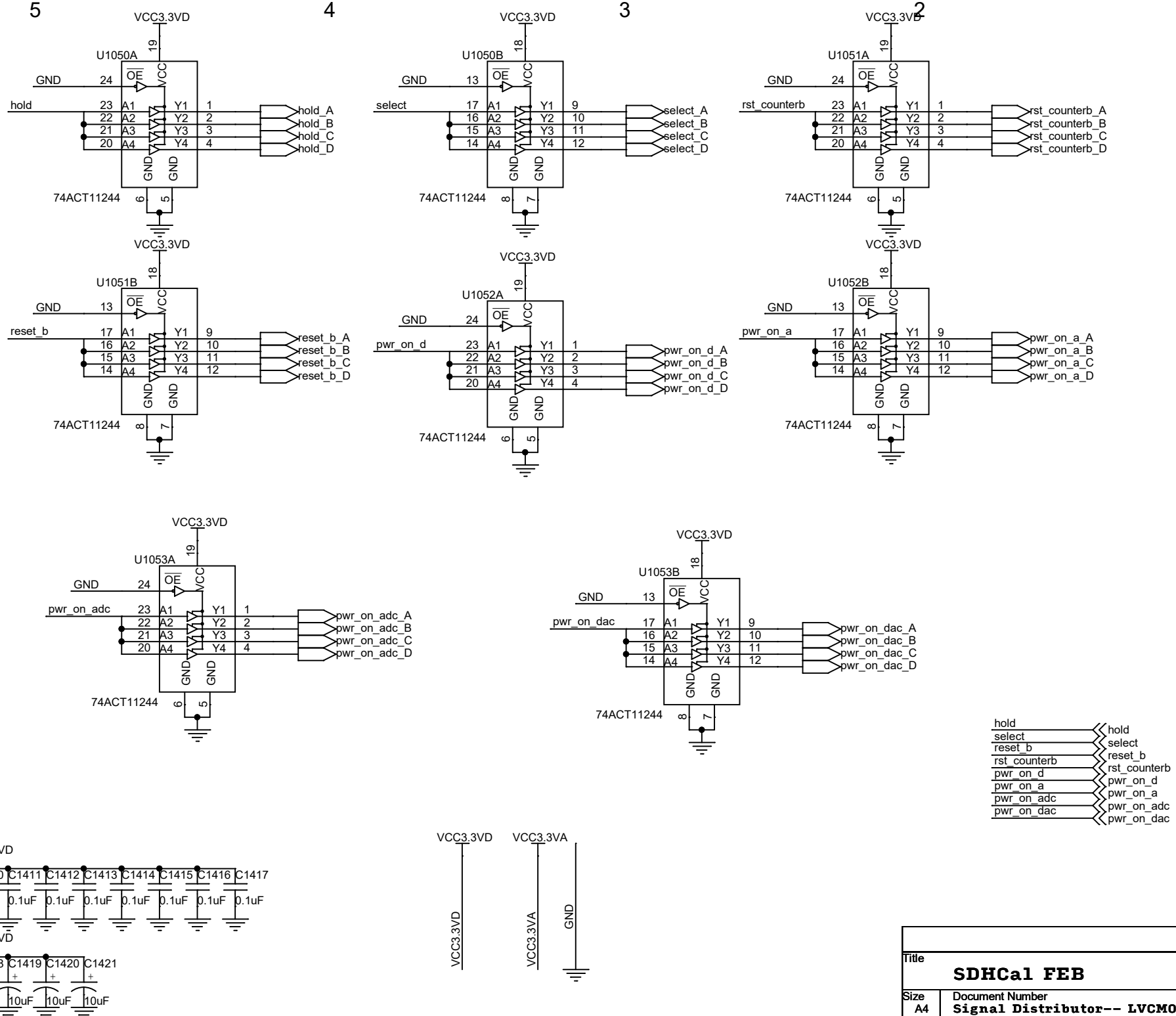

Title	**SDHCal FEB**	
Size A4	Document Number **Signal Distributor-- LVCMOS Driver**	Rev V1.0
Date: Monday, January 29, 2018	Sheet 40 of 48	

Driver enable pins:
When DE is low, the driver is disabled.
When DE is high, the driver is enabled.
There is a 300k ohm pulldown resistor on each pin.

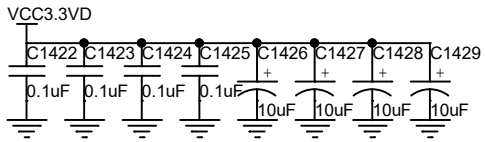

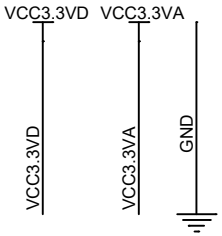

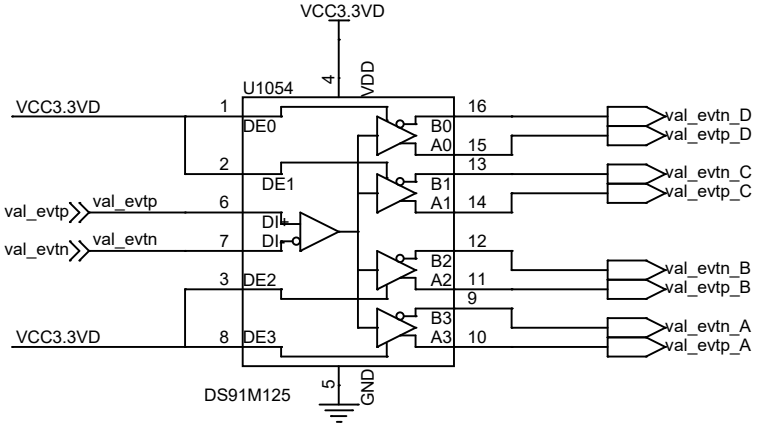

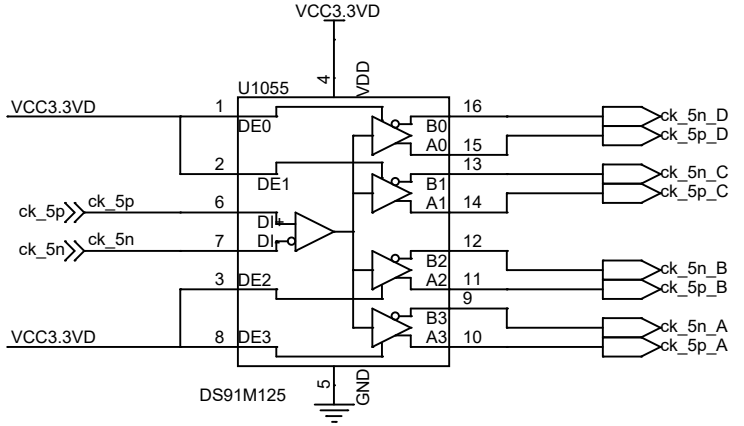

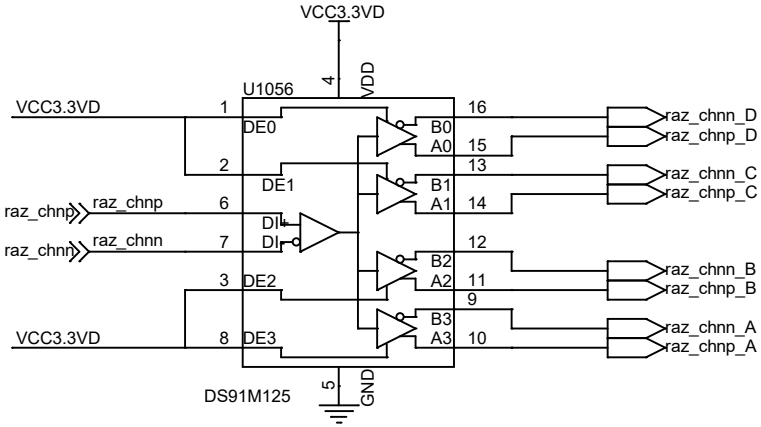

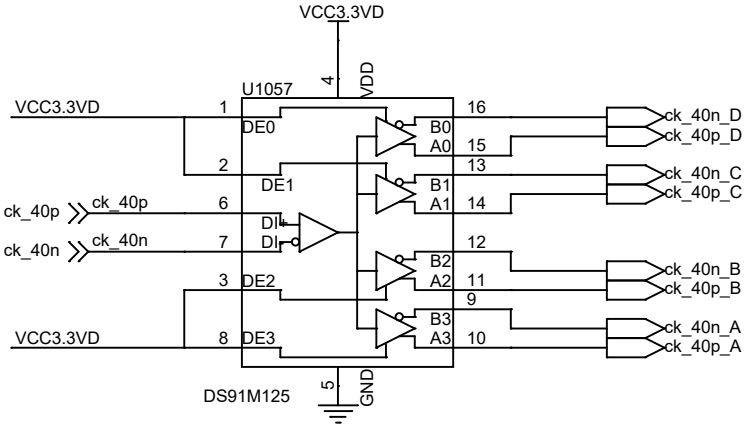

Title: **SDHCal FEB**		
Size: A4	Document Number: **Signal Distributor--LVDS Buffer**	Rev: V1.0
Date: Monday, January 29, 2018	Sheet 41 of 48	

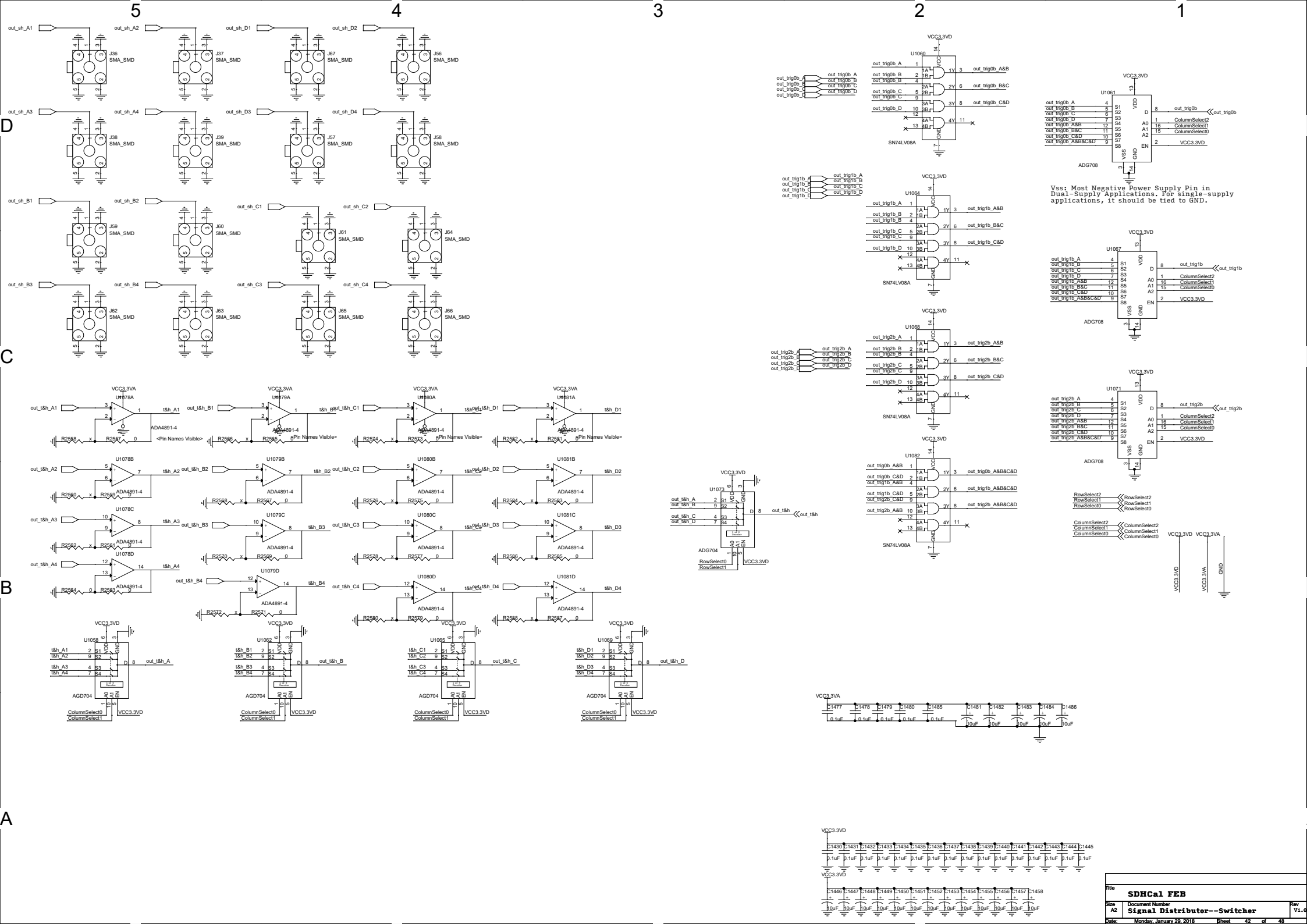
5
4
3
2
1
D
C
B
A
out_sh_A1
out_sh_A2
out_sh_D1
out_sh_D2
J36 SMA_SMD
J37 SMA_SMD
J67 SMA_SMD
J56 SMA_SMD
out_sh_A3
out_sh_A4
out_sh_D3
out_sh_D4
J38 SMA_SMD
J39 SMA_SMD
J57 SMA_SMD
J58 SMA_SMD
out_sh_B1
out_sh_B2
out_sh_C1
out_sh_C2
J59 SMA_SMD
J60 SMA_SMD
J61 SMA_SMD
J64 SMA_SMD
out_sh_B3
out_sh_B4
out_sh_C3
out_sh_C4
J62 SMA_SMD
J63 SMA_SMD
J65 SMA_SMD
J66 SMA_SMD
VCC3.3VA
U1078A
ADA4891-4
out_t&h_A1
t&h_A1
R2558
R2557
<Pin Names Visible>
U1079A
out_t&h_B1
t&h_B1
R2566
R2565
U1080A
out_t&h_C1
t&h_C1
R2574
R2573
U1081A
out_t&h_D1
t&h_D1
R2582
R2581
U1078B
out_t&h_A2
t&h_A2
R2560
R2559
U1079B
out_t&h_B2
t&h_B2
R2568
R2567
U1080B
out_t&h_C2
t&h_C2
R2576
R2575
U1081B
out_t&h_D2
t&h_D2
R2584
R2583
U1078C
out_t&h_A3
t&h_A3
R2562
R2561
U1079C
out_t&h_B3
t&h_B3
R2570
R2569
U1080C
out_t&h_C3
t&h_C3
R2578
R2577
U1081C
out_t&h_D3
t&h_D3
R2586
R2585
U1078D
out_t&h_A4
t&h_A4
R2564
R2563
U1079D
out_t&h_B4
t&h_B4
R2572
R2571
U1080D
out_t&h_C4
t&h_C4
R2580
R2579
U1081D
out_t&h_D4
t&h_D4
R2588
R2587
VCC3.3VD
U1058
U1062
U1065
U1069
t&h_A1
t&h_A2
t&h_A3
t&h_A4
t&h_B1
t&h_B2
t&h_B3
t&h_B4
t&h_C1
t&h_C2
t&h_C3
t&h_C4
t&h_D1
t&h_D2
t&h_D3
t&h_D4
out_t&h_A
out_t&h_B
out_t&h_C
out_t&h_D
AGD704
ColumnSelect0
ColumnSelect1
U1073
out_t&h_A
out_t&h_B
out_t&h_C
out_t&h_D
out_t&h
RowSelect0
RowSelect1
U1060
SN74LV08A
out_trig0b_A
out_trig0b_B
out_trig0b_C
out_trig0b_D
out_trig0b_A&B
out_trig0b_B&C
out_trig0b_C&D
U1064
out_trig1b_A
out_trig1b_B
out_trig1b_C
out_trig1b_D
out_trig1b_A&B
out_trig1b_B&C
out_trig1b_C&D
U1068
out_trig2b_A
out_trig2b_B
out_trig2b_C
out_trig2b_D
out_trig2b_A&B
out_trig2b_B&C
out_trig2b_C&D
U1082
out_trig0b_A&B
out_trig0b_C&D
out_trig1b_A&B
out_trig1b_C&D
out_trig2b_A&B
out_trig0b_A&B&C&D
out_trig1b_A&B&C&D
out_trig2b_A&B&C&D
U1061
U1067
U1071
ADG708
out_trig0b
out_trig1b
out_trig2b
ColumnSelect2
ColumnSelect1
ColumnSelect0
RowSelect2
RowSelect1
RowSelect0
VCC3.3VD
VCC3.3VA
GND
Vss: Most Negative Power Supply Pin in Dual-Supply Applications. For single-supply applications, it should be tied to GND.
C1477
C1478
C1479
C1480
C1485
C1481
C1482
C1483
C1484
C1486
0.1uF
10uF
C1430
C1431
C1432
C1433
C1434
C1435
C1436
C1437
C1438
C1439
C1440
C1441
C1442
C1443
C1444
C1445
C1446
C1447
C1448
C1449
C1450
C1451
C1452
C1453
C1454
C1455
C1456
C1457
C1458
Title
SDHCal FEB
Size
A2
Document Number
Signal Distributor--Switcher
Rev
V1.6
Date:
Monday, January 29, 2018
Sheet
42
of
48

This part is the readout array of GEM detector. The effective area of the GEM detector is 30cm*30cm, and the total size is 37.4*37.4. The detail structure of the Pad Readout Array is discribed in the Mechanical structure of Pad Readout Array.pdf

Title	<Title>	
Size A4	Document Number <Doc>	Rev <Rev
Date: Monday, January 29, 2018	Sheet 43 of 48	

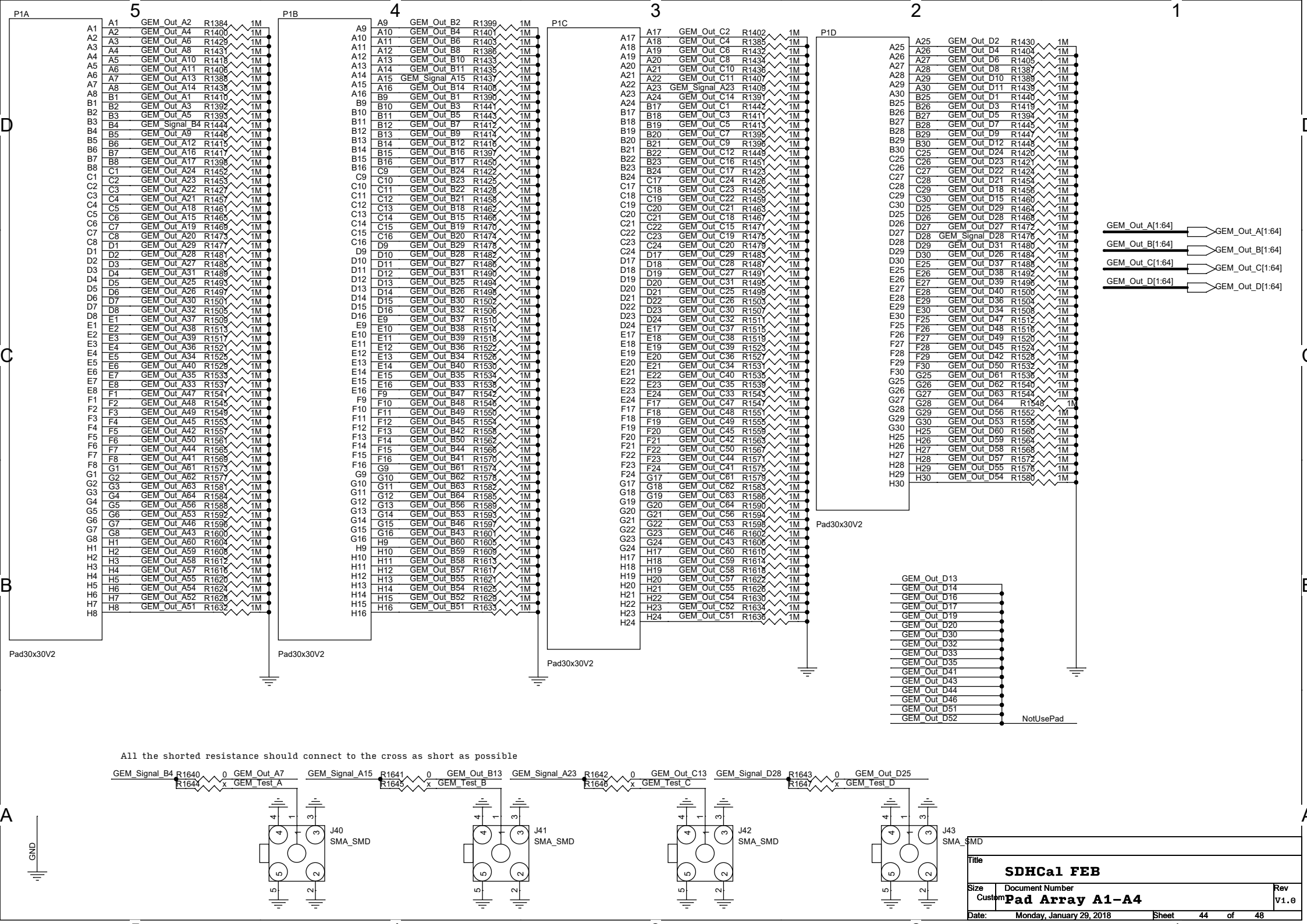
P1A
P1B
P1C
P1D
Pad30x30V2
GEM_Out_A[1:64]
GEM_Out_B[1:64]
GEM_Out_C[1:64]
GEM_Out_D[1:64]
NotUsePad
All the shorted resistance should connect to the cross as short as possible
GEM_Signal_B4
GEM_Signal_A15
GEM_Signal_A23
GEM_Signal_D28
GEM_Out_A7
GEM_Out_B13
GEM_Out_C13
GEM_Out_D25
GEM_Test_A
GEM_Test_B
GEM_Test_C
GEM_Test_D
J40
J41
J42
J43
SMA_SMD
GND
SDHCal FEB
Pad Array A1-A4
Monday, January 29, 2018
Sheet 44 of 48
V1.0

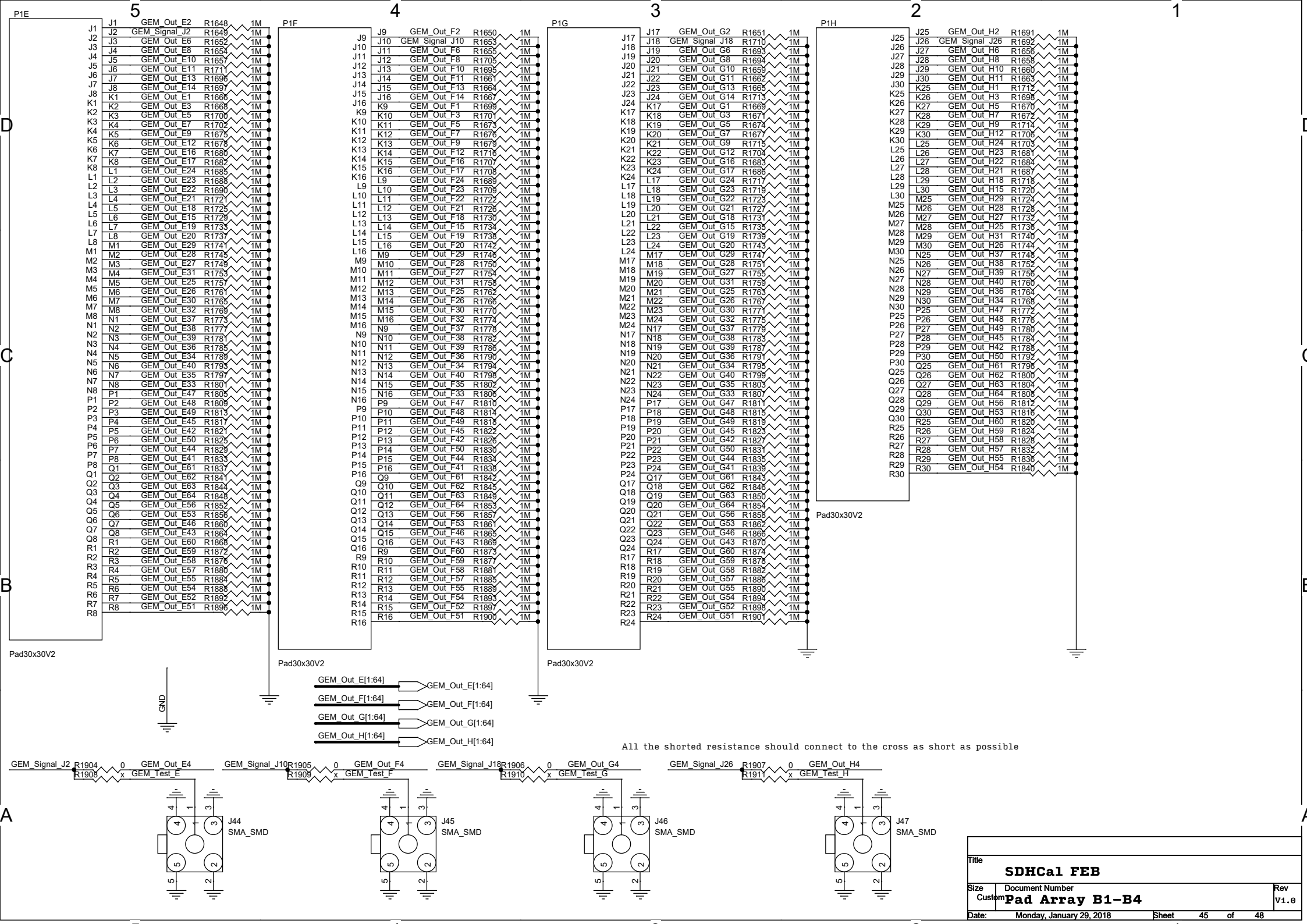
P1E
P1F
P1G
P1H
Pad30x30V2
GND
GEM_Out_E[1:64]
GEM_Out_F[1:64]
GEM_Out_G[1:64]
GEM_Out_H[1:64]
All the shorted resistance should connect to the cross as short as possible
GEM_Signal_J2
GEM_Signal_J10
GEM_Signal_J18
GEM_Signal_J26
GEM_Test_E
GEM_Test_F
GEM_Test_G
GEM_Test_H
J44
J45
J46
J47
SMA_SMD
Title
SDHCal FEB
Size
Custom
Document Number
Pad Array B1-B4
Rev
V1.0
Date:
Monday, January 29, 2018
Sheet
45
of
48

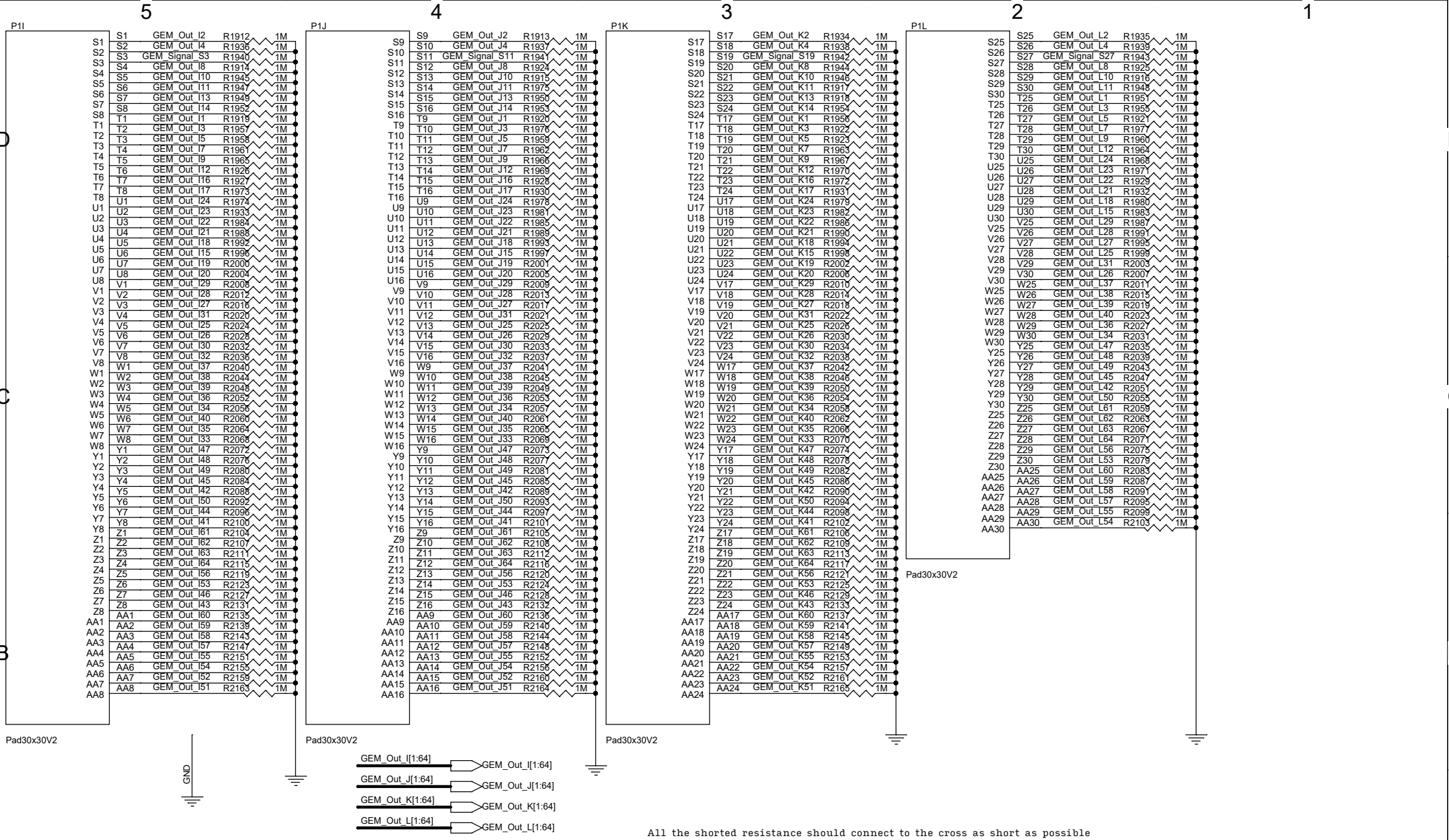

Title	SDHCal FEB
Size	Custom
Document Number	Pad Array C1-C4
Rev	V1.0
Date:	Monday, January 29, 2018
Sheet	46 of 48

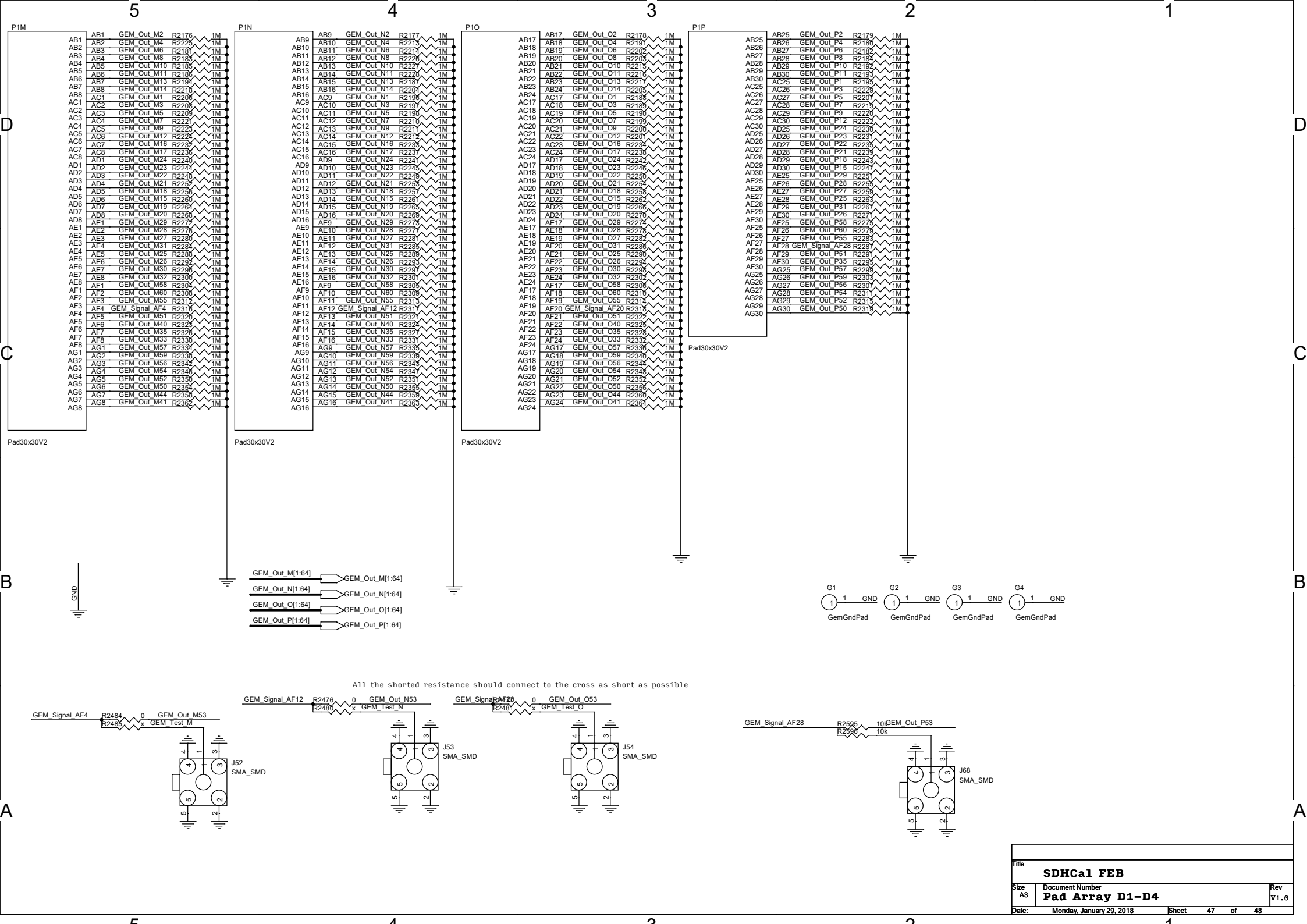
P1M
P1N
P1O
P1P
Pad30x30V2
GEM_Out_M[1:64]
GEM_Out_N[1:64]
GEM_Out_O[1:64]
GEM_Out_P[1:64]
GND
G1
G2
G3
G4
GemGndPad
All the shorted resistance should connect to the cross as short as possible
GEM_Signal_AF4
GEM_Signal_AF12
GEM_Signal_AF20
GEM_Signal_AF28
GEM_Test_M
GEM_Test_N
GEM_Test_O
J52
J53
J54
J68
SMA_SMD
Title
SDHCal FEB
Size
A3
Document Number
Pad Array D1-D4
Rev
V1.0
Date:
Monday, January 29, 2018
Sheet
47
of
48

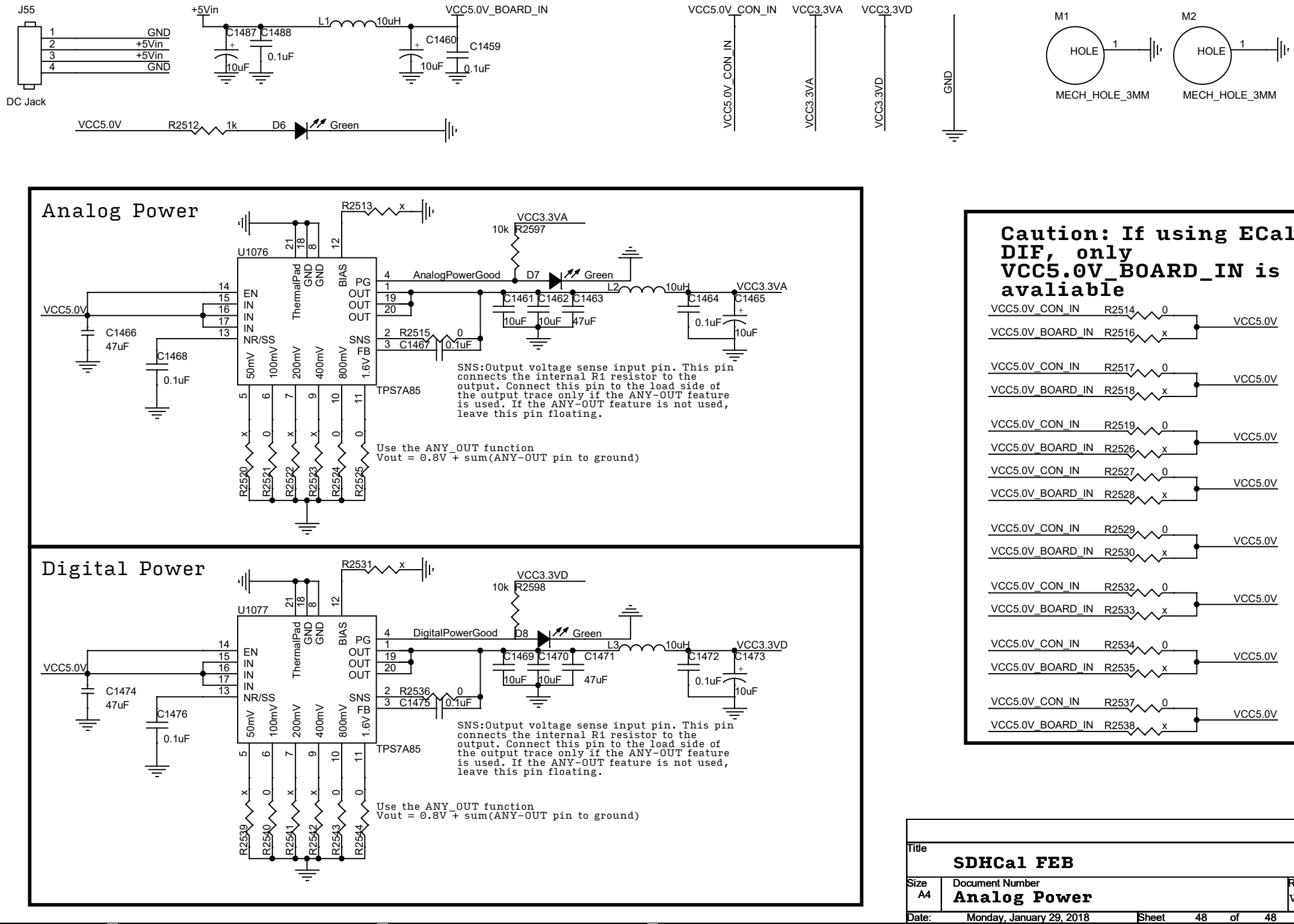
5
4
3
2
1
J55
1 GND
2 +5Vin
3 +5Vin
4 GND
DC Jack
+5Vin
C1487 C1488
10uF 0.1uF
L1 10uH
VCC5.0V_BOARD_IN
C1460 C1459
10uF 0.1uF
VCC5.0V_CON_IN
VCC3.3VA
VCC3.3VD
GND
M1 HOLE 1
M2 HOLE 1
MECH_HOLE_3MM
MECH_HOLE_3MM
VCC5.0V R2512 1k D6 Green
Analog Power
U1076
R2513 x
VCC3.3VA
10k R2597
AnalogPowerGood
D7 Green
L2 10uH
VCC3.3VA
C1461 C1462 C1463
10uF 10uF 47uF
C1464 C1465
0.1uF 10uF
VCC5.0V
C1466 47uF
C1468 0.1uF
EN IN IN IN NR/SS
ThermalPad GND GND
BIAS PG OUT OUT OUT SNS FB
50mV 100mV 200mV 400mV 800mV 1.6V
TPS7A85
R2515 0
C1467 0.1uF
SNS:Output voltage sense input pin. This pin connects the internal R1 resistor to the output. Connect this pin to the load side of the output trace only if the ANY-OUT feature is used. If the ANY-OUT feature is not used, leave this pin floating.
R2520 R2521 R2522 R2523 R2524 R2525
Use the ANY_OUT function
Vout = 0.8V + sum(ANY-OUT pin to ground)
Digital Power
U1077
R2531 x
VCC3.3VD
10k R2598
DigitalPowerGood
D8 Green
L3 10uH
VCC3.3VD
C1469 C1470 C1471
10uF 10uF 47uF
C1472 C1473
0.1uF 10uF
VCC5.0V
C1474 47uF
C1476 0.1uF
R2536 0
C1475 0.1uF
SNS:Output voltage sense input pin. This pin connects the internal R1 resistor to the output. Connect this pin to the load side of the output trace only if the ANY-OUT feature is used. If the ANY-OUT feature is not used, leave this pin floating.
R2539 R2540 R2541 R2542 R2543 R2544
Use the ANY_OUT function
Vout = 0.8V + sum(ANY-OUT pin to ground)
Caution: If using ECal DIF, only VCC5.0V_BOARD_IN is avaliable
VCC5.0V_CON_IN R2514 0
VCC5.0V_BOARD_IN R2516 x
VCC5.0V
VCC5.0V_CON_IN R2517 0
VCC5.0V_BOARD_IN R2518 x
VCC5.0V
VCC5.0V_CON_IN R2519 0
VCC5.0V_BOARD_IN R2526 x
VCC5.0V
VCC5.0V_CON_IN R2527 0
VCC5.0V_BOARD_IN R2528 x
VCC5.0V
VCC5.0V_CON_IN R2529 0
VCC5.0V_BOARD_IN R2530 x
VCC5.0V
VCC5.0V_CON_IN R2532 0
VCC5.0V_BOARD_IN R2533 x
VCC5.0V
VCC5.0V_CON_IN R2534 0
VCC5.0V_BOARD_IN R2535 x
VCC5.0V
VCC5.0V_CON_IN R2537 0
VCC5.0V_BOARD_IN R2538 x
VCC5.0V
Title
SDHCal FEB
Size A4
Document Number
Analog Power
Rev V1.0
Date: Monday, January 29, 2018
Sheet 48 of 48