MICROROC is dedicated chip for GEM/MICROMEGAS. MICROROC(pin pin compatible with HR2b) is based on HR2b same back-end, same readout format, same pinout, only the preamplifier is changing
Dynamic range 1fC~500fC

The GEM detector is designed as 37cm*37cm, and its effictive area is 30cm*30cm.
Each Microroc ASIC has 64 readout channels. That is to say some of Microrocs cannot be full used and the unused pin should tied to GND via a capacitor.
The ESD protection is necessary as there might be spark in the GEM.

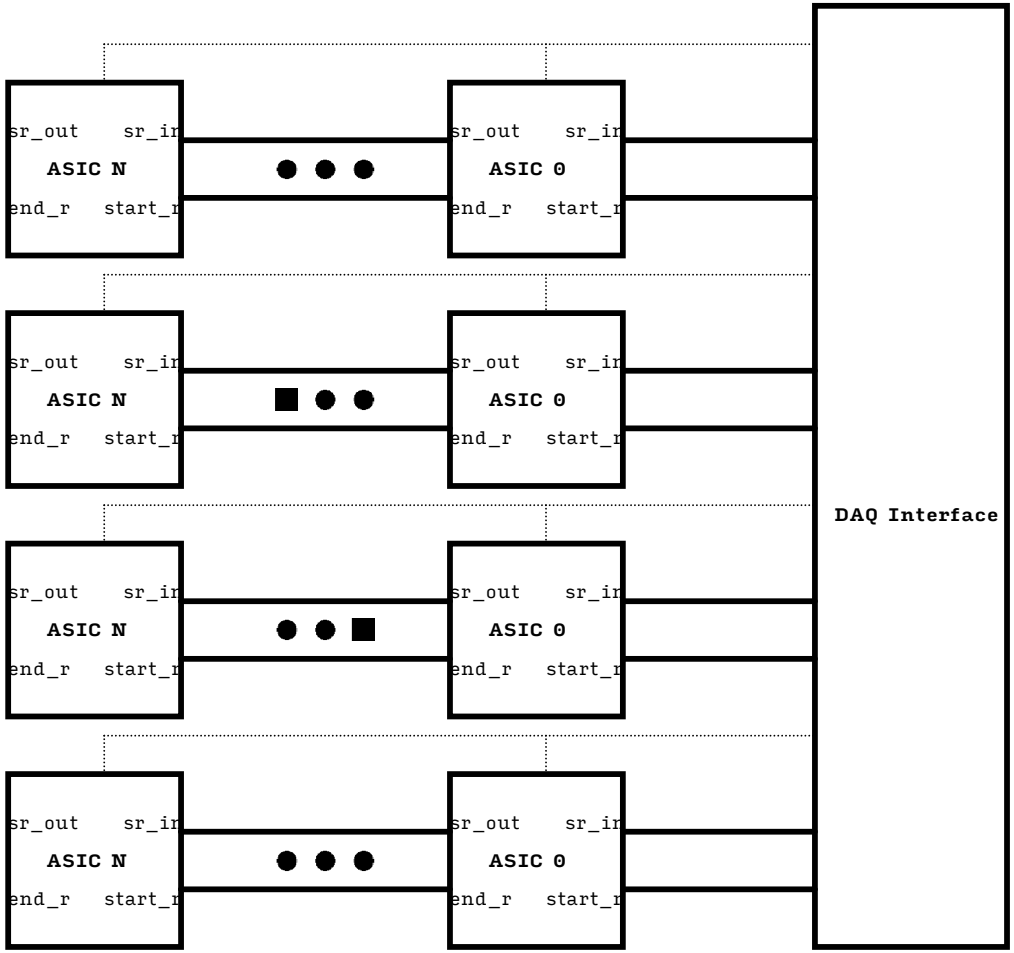

There are 3 kinds of control signals
1. Daisy chain signals: sr_in, sr_out, start_readout, end_readout
2. Independent signal for each chain: Dout1b, Dout2b, TransmitOn1b, TransmitOn2b, ChipSatb, TrigExt, StartAcq, StartReadout1, StartReadout2, sr_rstb, sr_ck, sr_in, EndReadout1, EndReadout2, sr_out
3. Common signals for all chains: 4 LVDS signals, power on signals, reset_b, rst_counterb, select, hold, out_trigger0~2b

FPGA LVDS driver can handle directly many ASICs (6-10) for sure.
But if there is more ASICs, you should use more than 1 dedicated LVDS drivers.
In this design, M-LVDS buffer is used

SDHCal FEB

SDHCal FEBVersion: 1.0Design Tools: Cadence 16.6Finish Date: 2018/01/27
Engineer: Yu WangCompany: USTC

Tips: If there is gibberish, please install the 'Input' font, 'Romantic' font and 'Celestina' font.

Note:All the Title and Document Number is Input, blod, size 10.Rev is Input, size 6.
All the comments is Input, blue size 6
Note: All the unsolder package should value x(Not X)
Capacitor: F(Not f)

Title: SDHCal FEB		
Size: A4	Document Number: Design Info	Rev: v1.0
Date: Monday, January 22, 2018	Sheet 1 of 48	

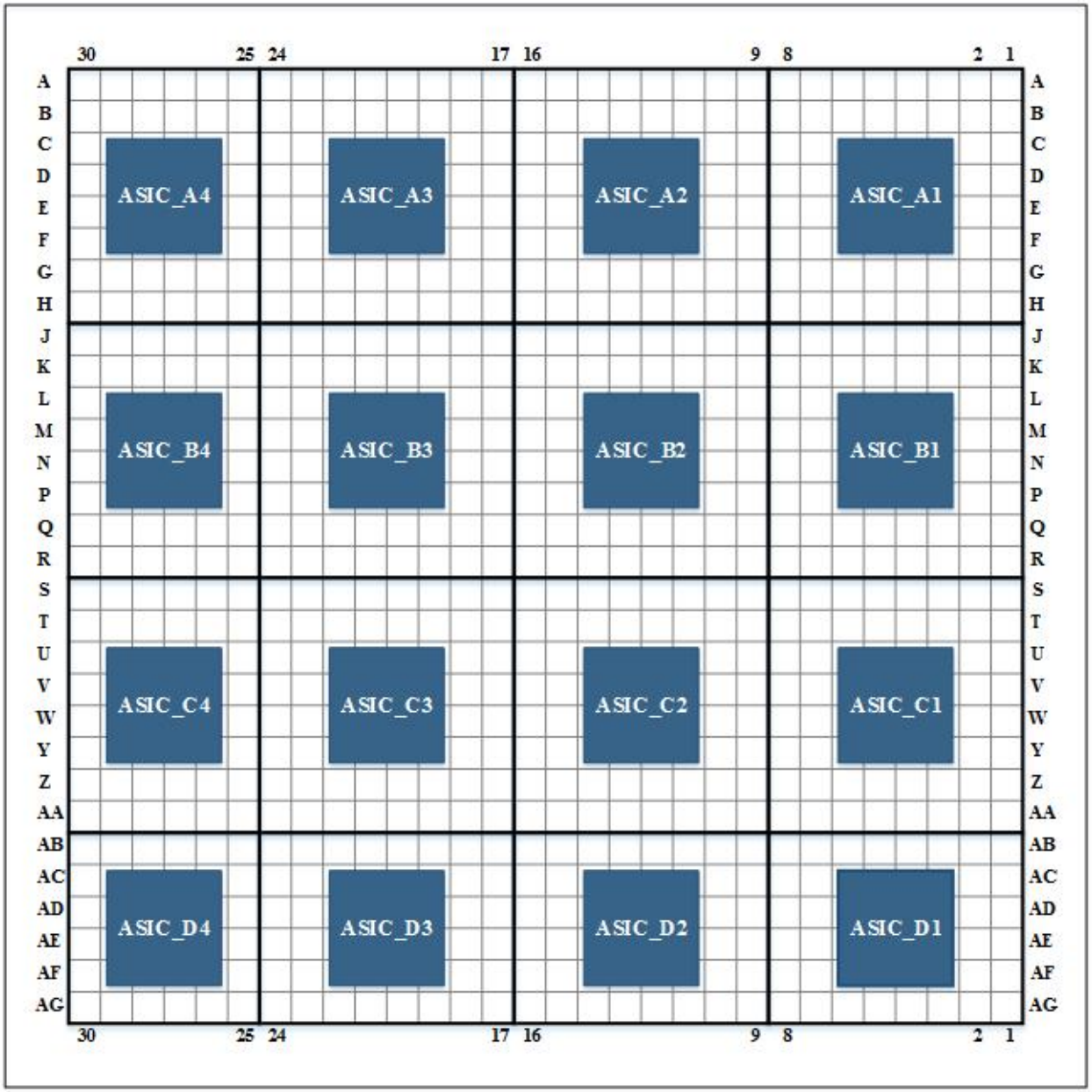

Title	SDHCal FEB	
Size A4	Document Number Design Structure	Rev v1.0
Date: Monday, January 22, 2018	Sheet 2 of 48	

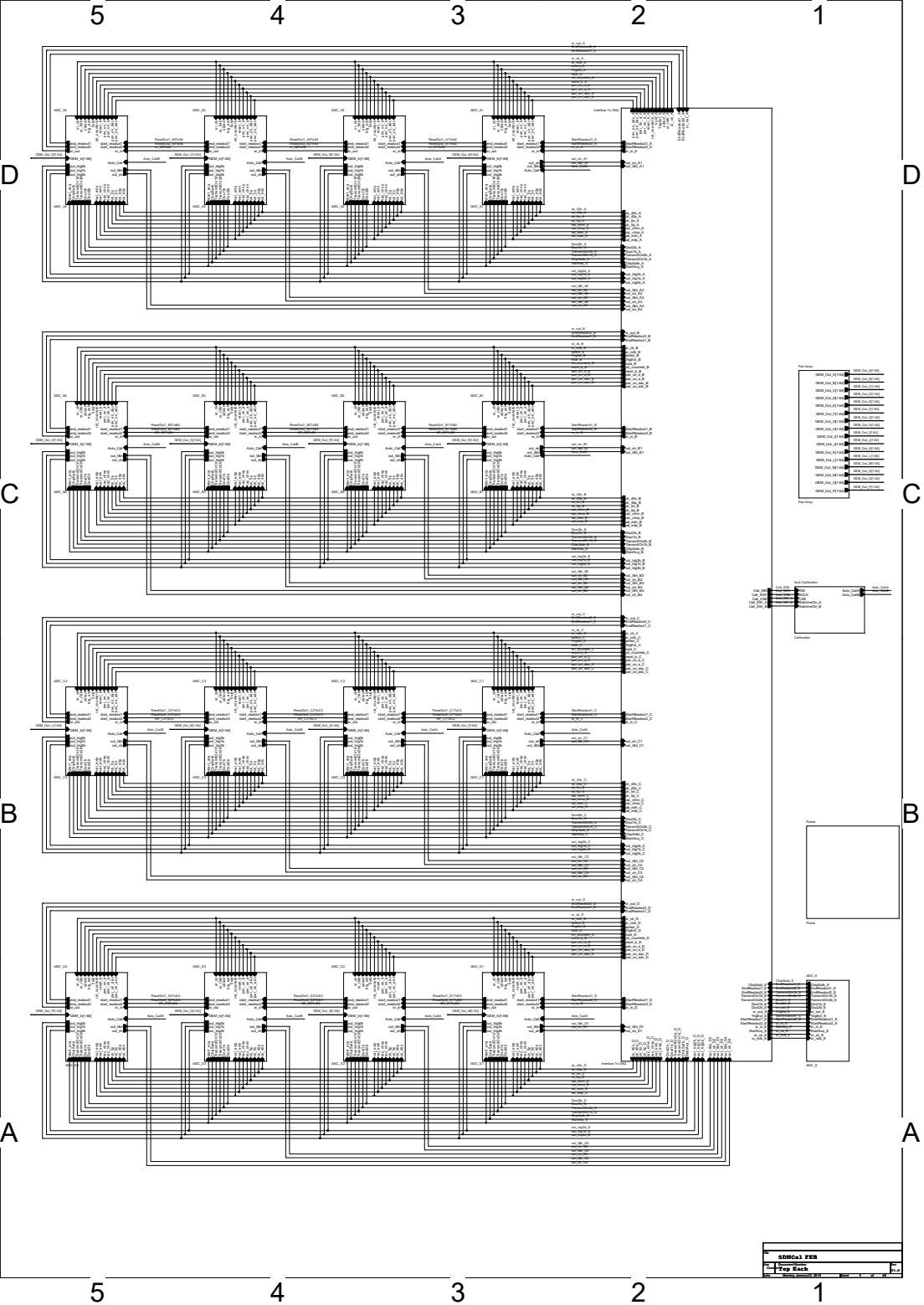
5
4
3
2
1
D
C
B
A
SDHCn1 FEB
Top Each

Although the each channel of MICROROC has a spark protection network, it's recommanded to add external protection circuit. BAV99W is a choise but may not be the best!

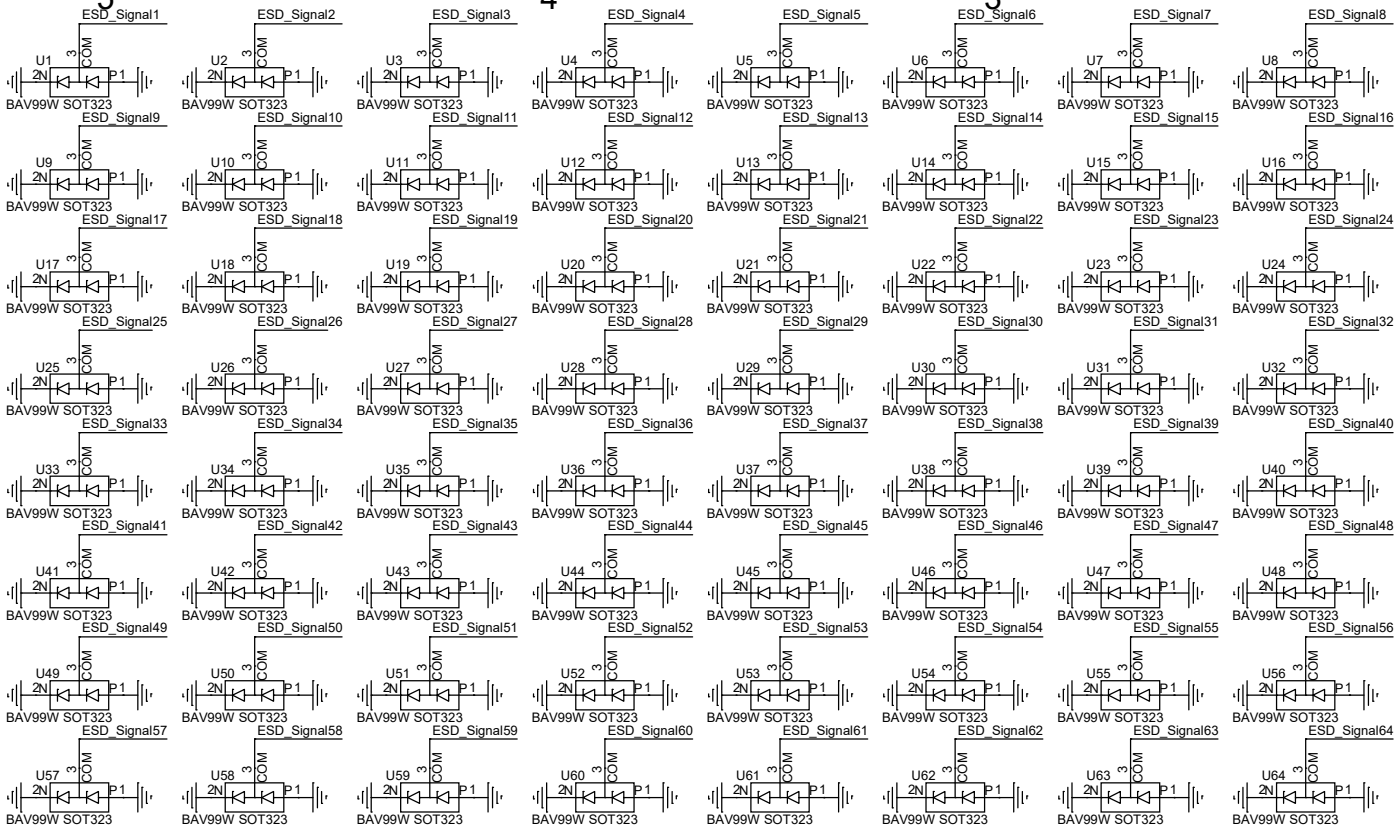

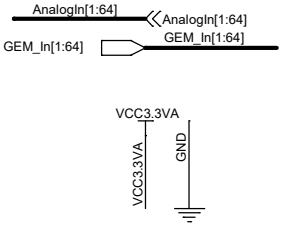

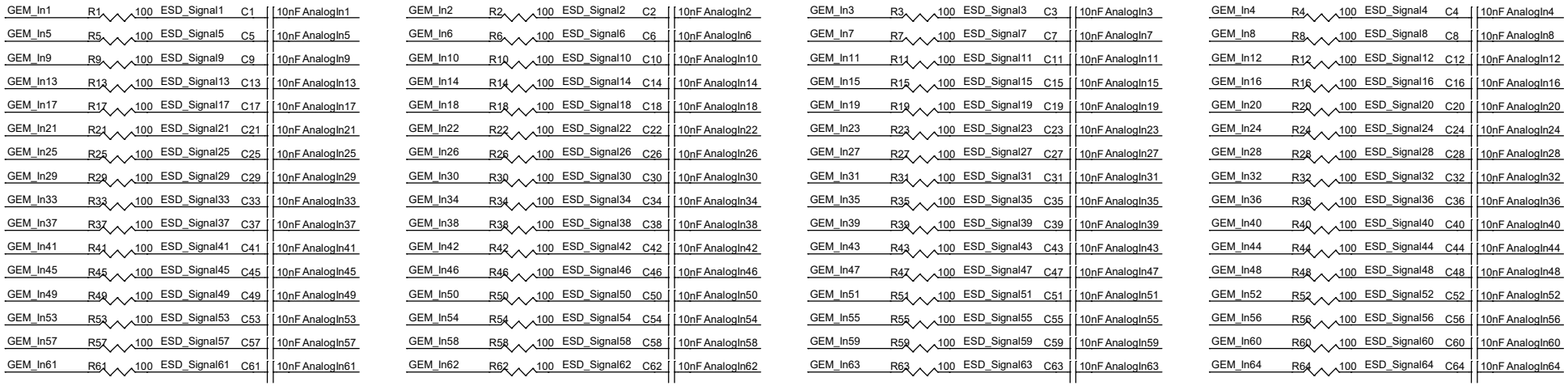

Title	SDHCal FEB	
Size: Custom	Document Number: ASIC A1 -- Analog In	Rev: V1.0
Date: Monday, January 22, 2018	Sheet 4 of 48	

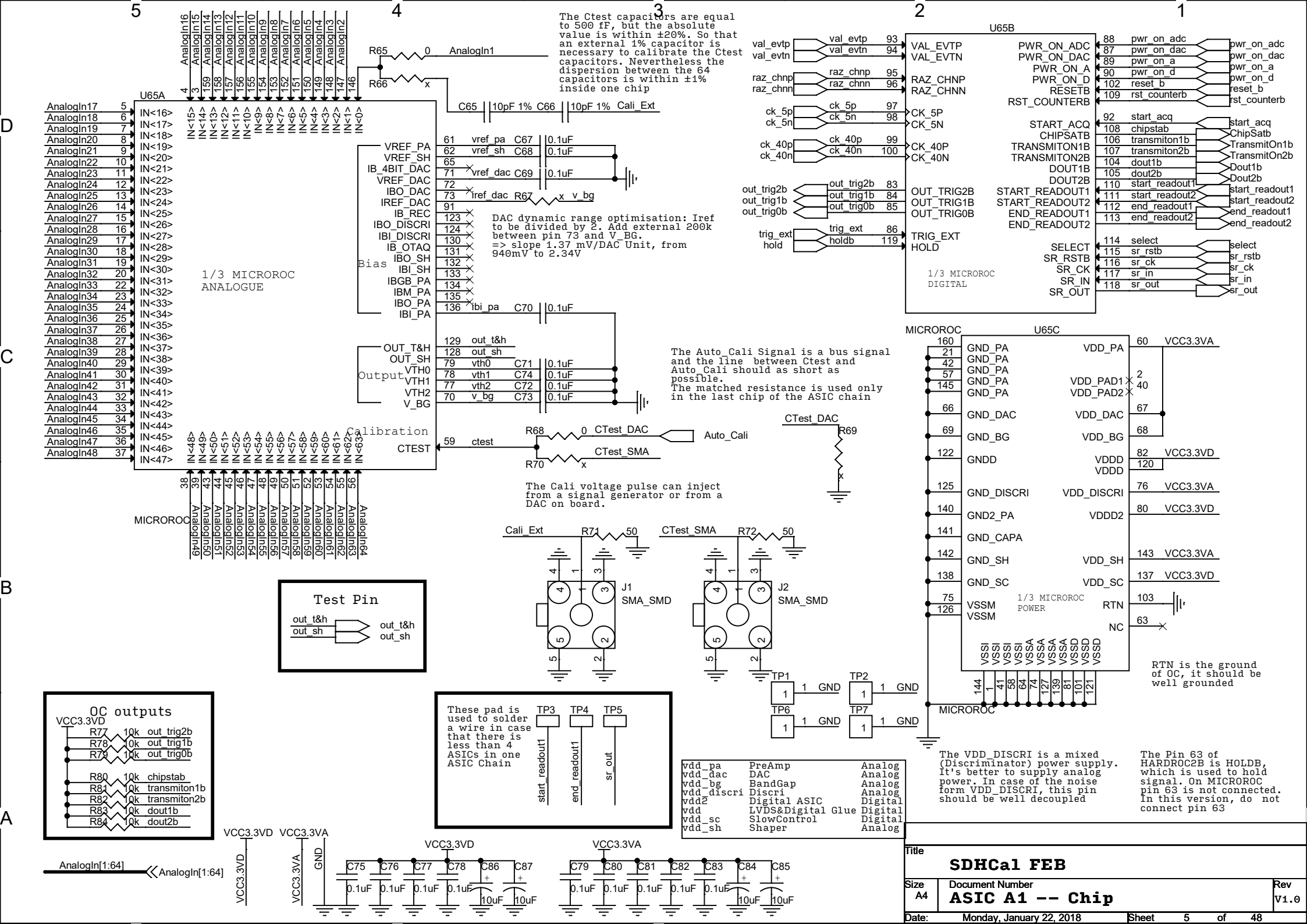
The Ctest capacitors are equal to 500 fF, but the absolute value is within ±20%. So that an external 1% capacitor is necessary to calibrate the Ctest capacitors. Nevertheless the dispersion between the 64 capacitors is within ±1% inside one chip
U65A
1/3 MICROROC ANALOGUE
DAC dynamic range optimisation: Iref to be divided by 2. Add external 200k between pin 73 and V_BG. => slope 1.37 mV/DAC Unit, from 940mV to 2.34V
The Auto_Cali Signal is a bus signal and the line between Ctest and Auto_Cali should as short as possible. The matched resistance is used only in the last chip of the ASIC chain
The Cali voltage pulse can inject from a signal generator or from a DAC on board.
U65B
1/3 MICROROC DIGITAL
U65C
1/3 MICROROC POWER
MICROROC
Test Pin
OC outputs
These pad is used to solder a wire in case that there is less than 4 ASICs in one ASIC Chain
RTN is the ground of OC, it should be well grounded
The VDD_DISCRI is a mixed (Discriminator) power supply. It's better to supply analog power. In case of the noise form VDD_DISCRI, this pin should be well decoupled
The Pin 63 of HARDROC2B is HOLDB, which is used to hold signal. On MICROROC pin 63 is not connected. In this version, do not connect pin 63
SDHCal FEB
ASIC A1 -- Chip
Monday, January 22, 2018

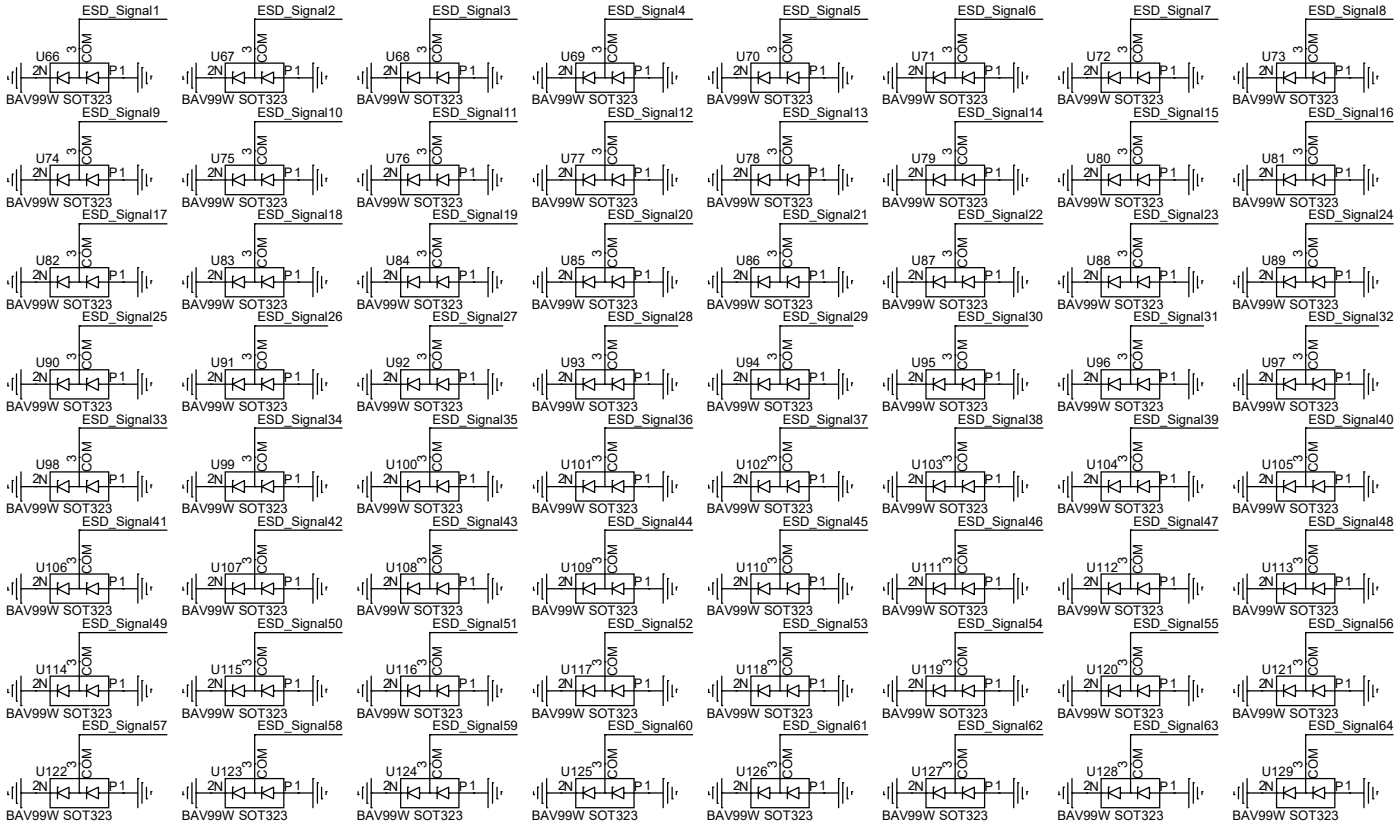

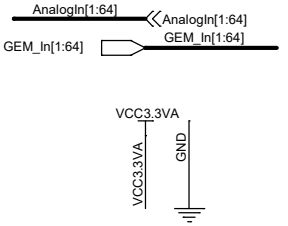

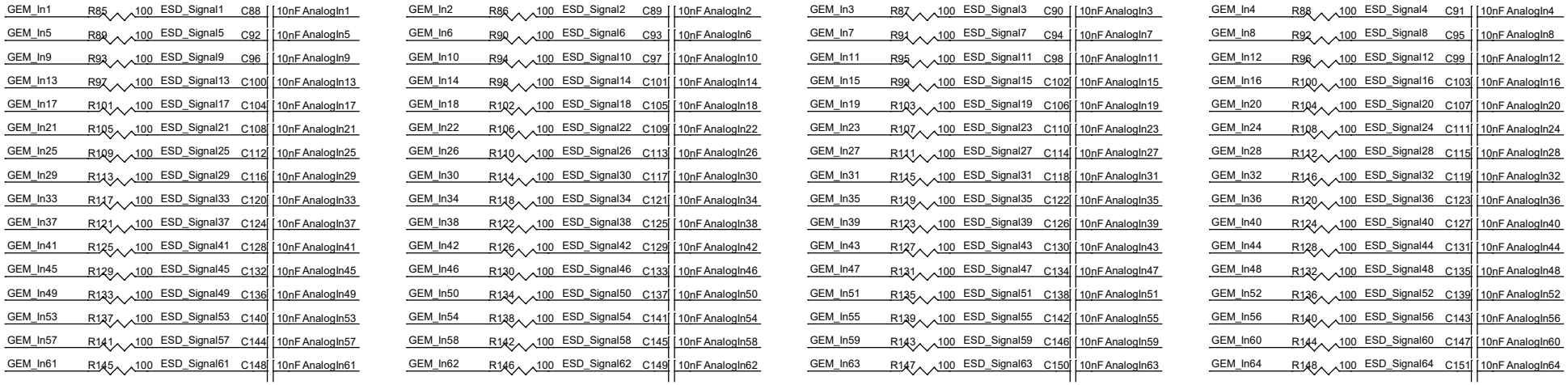

Title	SDHCal FEB	
Size: Custom	Document Number: ASIC A2 -- Analog In	Rev: V1.0
Date: Monday, January 22, 2018	Sheet 6 of 48	

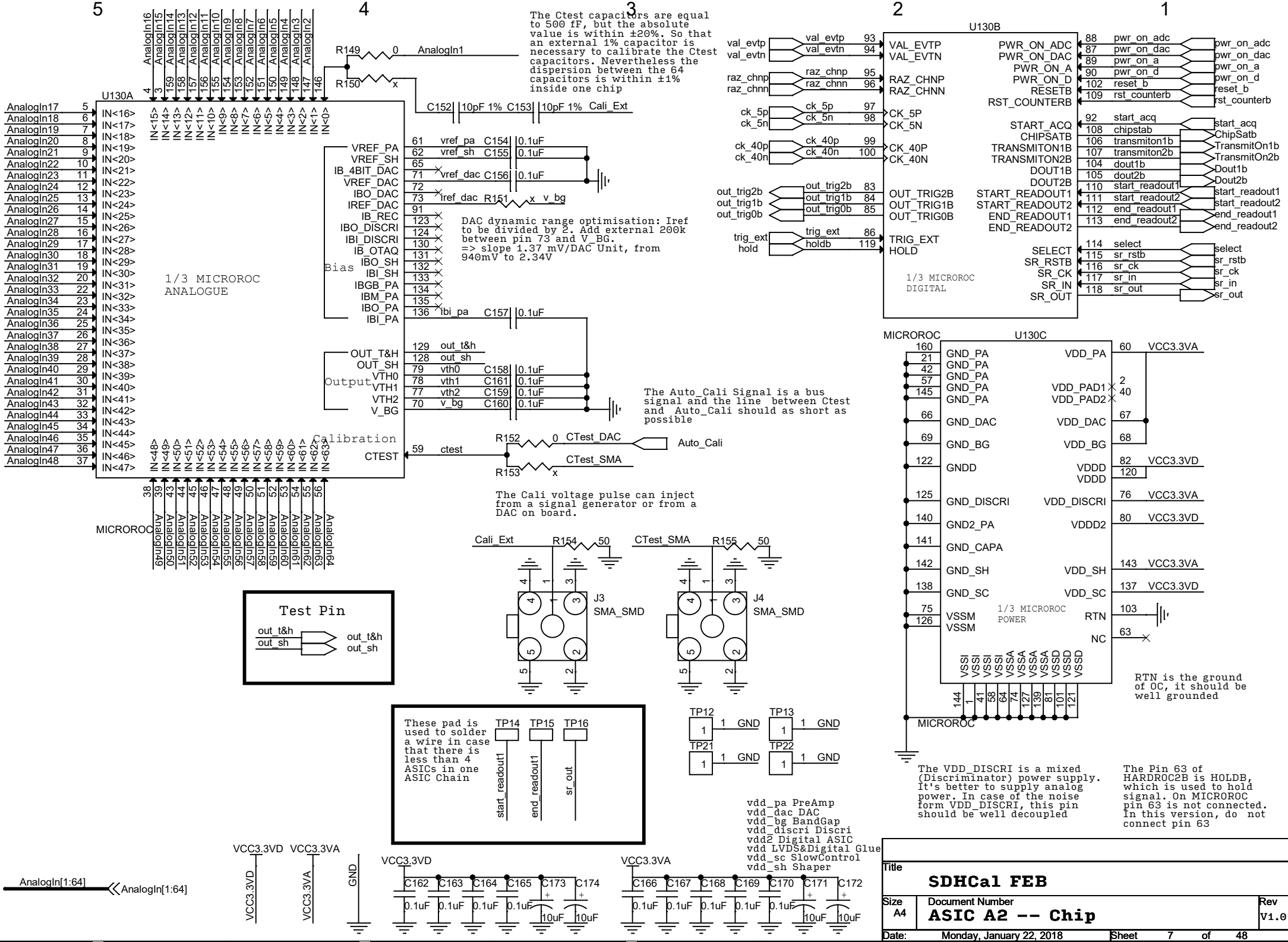
The Ctest capacitors are equal to 500 fF, but the absolute value is within ±20%. So that an external 1% capacitor is necessary to calibrate the Ctest capacitors. Nevertheless the dispersion between the 64 capacitors is within ±1% inside one chip
U130A
1/3 MICROROC ANALOGUE
DAC dynamic range optimisation: Iref to be divided by 2. Add external 200k between pin 73 and V_BG. => slope 1.37 mV/DAC Unit, from 940mV to 2.34V
The Auto_Cali Signal is a bus signal and the line between Ctest and Auto_Cali should as short as possible
The Cali voltage pulse can inject from a signal generator or from a DAC on board.
U130B
1/3 MICROROC DIGITAL
U130C
1/3 MICROROC POWER
RTN is the ground of OC, it should be well grounded
The VDD_DISCRI is a mixed (Discriminator) power supply. It's better to supply analog power. In case of the noise form VDD_DISCRI, this pin should be well decoupled
The Pin 63 of HARDROC2B is HOLDB, which is used to hold signal. On MICROROC pin 63 is not connected. In this version, do not connect pin 63
Test Pin
These pad is used to solder a wire in case that there is less than 4 ASICs in one ASIC Chain
vdd_pa PreAmp
vdd_dac DAC
vdd_bg BandGap
vdd_discri Discri
vdd2 Digital ASIC
vdd LVDS&Digital Glue
vdd_sc SlowControl
vdd_sh Shaper
SDHCal FEB
ASIC A2 -- Chip
Monday, January 22, 2018

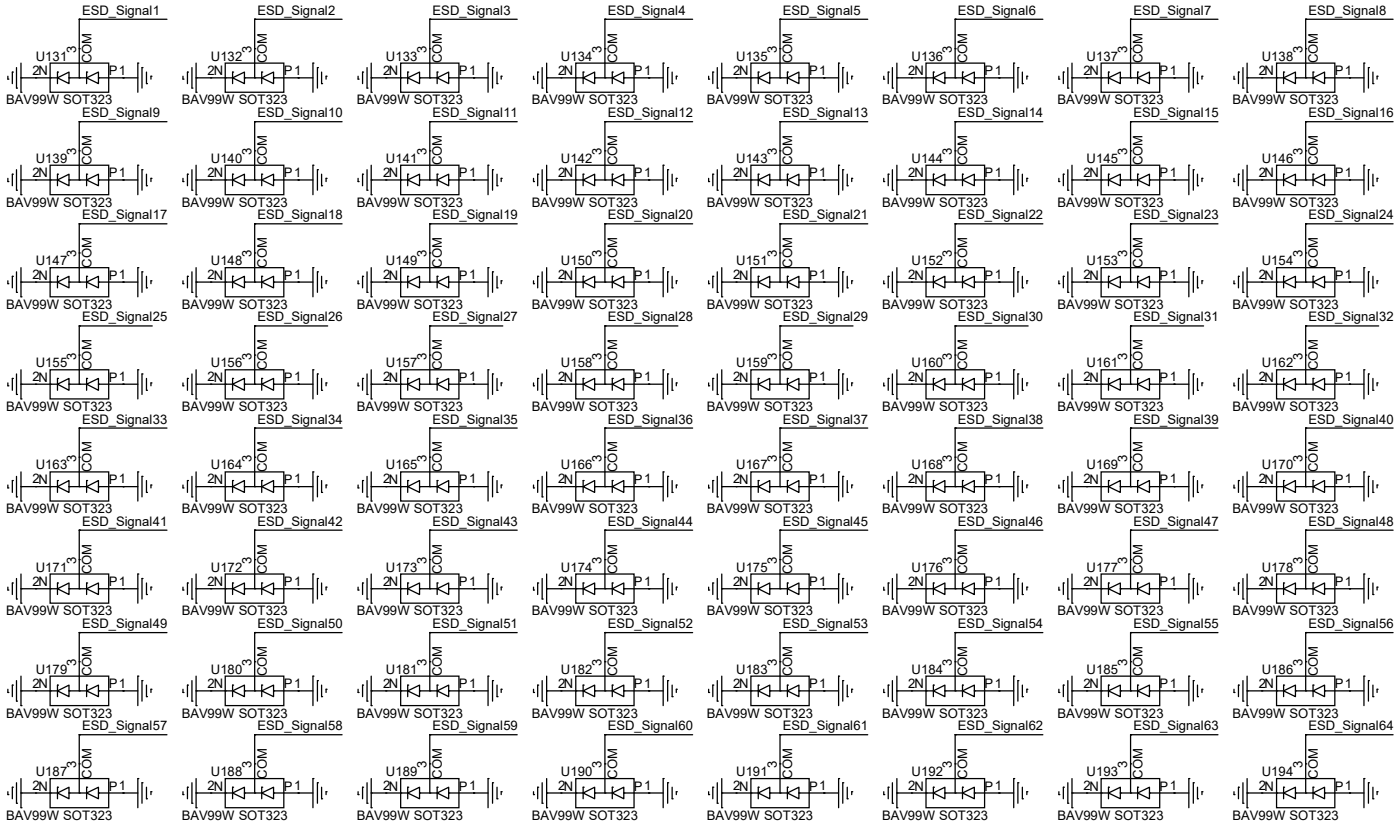

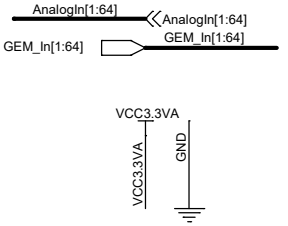

GEM_In1	R168	100	ESD_Signal1	C175	10nF AnalogIn1	GEM_In2	R169	100	ESD_Signal2	C176	10nF AnalogIn2	GEM_In3	R170	100	ESD_Signal3	C177	10nF AnalogIn3	GEM_In4	R171	100	ESD_Signal4	C178	10nF AnalogIn4
GEM_In5	R172	100	ESD_Signal5	C179	10nF AnalogIn5	GEM_In6	R173	100	ESD_Signal6	C180	10nF AnalogIn6	GEM_In7	R174	100	ESD_Signal7	C181	10nF AnalogIn7	GEM_In8	R175	100	ESD_Signal8	C182	10nF AnalogIn8
GEM_In9	R176	100	ESD_Signal9	C183	10nF AnalogIn9	GEM_In10	R177	100	ESD_Signal10	C184	10nF AnalogIn10	GEM_In11	R178	100	ESD_Signal11	C185	10nF AnalogIn11	GEM_In12	R179	100	ESD_Signal12	C186	10nF AnalogIn12
GEM_In13	R180	100	ESD_Signal13	C187	10nF AnalogIn13	GEM_In14	R181	100	ESD_Signal14	C188	10nF AnalogIn14	GEM_In15	R182	100	ESD_Signal15	C189	10nF AnalogIn15	GEM_In16	R183	100	ESD_Signal16	C190	10nF AnalogIn16
GEM_In17	R184	100	ESD_Signal17	C191	10nF AnalogIn17	GEM_In18	R185	100	ESD_Signal18	C192	10nF AnalogIn18	GEM_In19	R186	100	ESD_Signal19	C193	10nF AnalogIn19	GEM_In20	R187	100	ESD_Signal20	C194	10nF AnalogIn20
GEM_In21	R188	100	ESD_Signal21	C195	10nF AnalogIn21	GEM_In22	R189	100	ESD_Signal22	C196	10nF AnalogIn22	GEM_In23	R190	100	ESD_Signal23	C197	10nF AnalogIn23	GEM_In24	R191	100	ESD_Signal24	C198	10nF AnalogIn24
GEM_In25	R192	100	ESD_Signal25	C199	10nF AnalogIn25	GEM_In26	R193	100	ESD_Signal26	C200	10nF AnalogIn26	GEM_In27	R194	100	ESD_Signal27	C201	10nF AnalogIn27	GEM_In28	R195	100	ESD_Signal28	C202	10nF AnalogIn28
GEM_In29	R196	100	ESD_Signal29	C203	10nF AnalogIn29	GEM_In30	R197	100	ESD_Signal30	C204	10nF AnalogIn30	GEM_In31	R198	100	ESD_Signal31	C205	10nF AnalogIn31	GEM_In32	R199	100	ESD_Signal32	C206	10nF AnalogIn32
GEM_In33	R200	100	ESD_Signal33	C207	10nF AnalogIn33	GEM_In34	R201	100	ESD_Signal34	C208	10nF AnalogIn34	GEM_In35	R202	100	ESD_Signal35	C209	10nF AnalogIn35	GEM_In36	R203	100	ESD_Signal36	C210	10nF AnalogIn36
GEM_In37	R204	100	ESD_Signal37	C211	10nF AnalogIn37	GEM_In38	R205	100	ESD_Signal38	C212	10nF AnalogIn38	GEM_In39	R206	100	ESD_Signal39	C213	10nF AnalogIn39	GEM_In40	R207	100	ESD_Signal40	C214	10nF AnalogIn40
GEM_In41	R208	100	ESD_Signal41	C215	10nF AnalogIn41	GEM_In42	R209	100	ESD_Signal42	C216	10nF AnalogIn42	GEM_In43	R210	100	ESD_Signal43	C217	10nF AnalogIn43	GEM_In44	R211	100	ESD_Signal44	C218	10nF AnalogIn44
GEM_In45	R212	100	ESD_Signal45	C219	10nF AnalogIn45	GEM_In46	R213	100	ESD_Signal46	C220	10nF AnalogIn46	GEM_In47	R214	100	ESD_Signal47	C221	10nF AnalogIn47	GEM_In48	R215	100	ESD_Signal48	C222	10nF AnalogIn48
GEM_In49	R216	100	ESD_Signal49	C223	10nF AnalogIn49	GEM_In50	R217	100	ESD_Signal50	C224	10nF AnalogIn50	GEM_In51	R218	100	ESD_Signal51	C225	10nF AnalogIn51	GEM_In52	R219	100	ESD_Signal52	C226	10nF AnalogIn52
GEM_In53	R220	100	ESD_Signal53	C227	10nF AnalogIn53	GEM_In54	R221	100	ESD_Signal54	C228	10nF AnalogIn54	GEM_In55	R222	100	ESD_Signal55	C229	10nF AnalogIn55	GEM_In56	R223	100	ESD_Signal56	C230	10nF AnalogIn56
GEM_In57	R224	100	ESD_Signal57	C231	10nF AnalogIn57	GEM_In58	R225	100	ESD_Signal58	C232	10nF AnalogIn58	GEM_In59	R226	100	ESD_Signal59	C233	10nF AnalogIn59	GEM_In60	R227	100	ESD_Signal60	C234	10nF AnalogIn60
GEM_In61	R228	100	ESD_Signal61	C235	10nF AnalogIn61	GEM_In62	R229	100	ESD_Signal62	C236	10nF AnalogIn62	GEM_In63	R230	100	ESD_Signal63	C237	10nF AnalogIn63	GEM_In64	R231	100	ESD_Signal64	C238	10nF AnalogIn64

Title	SDHCal FEB		
Size: Custom	Document Number: ASIC A3 -- Analog In		Rev: V1.0
Date: Monday, January 22, 2018	Sheet 8 of 48		

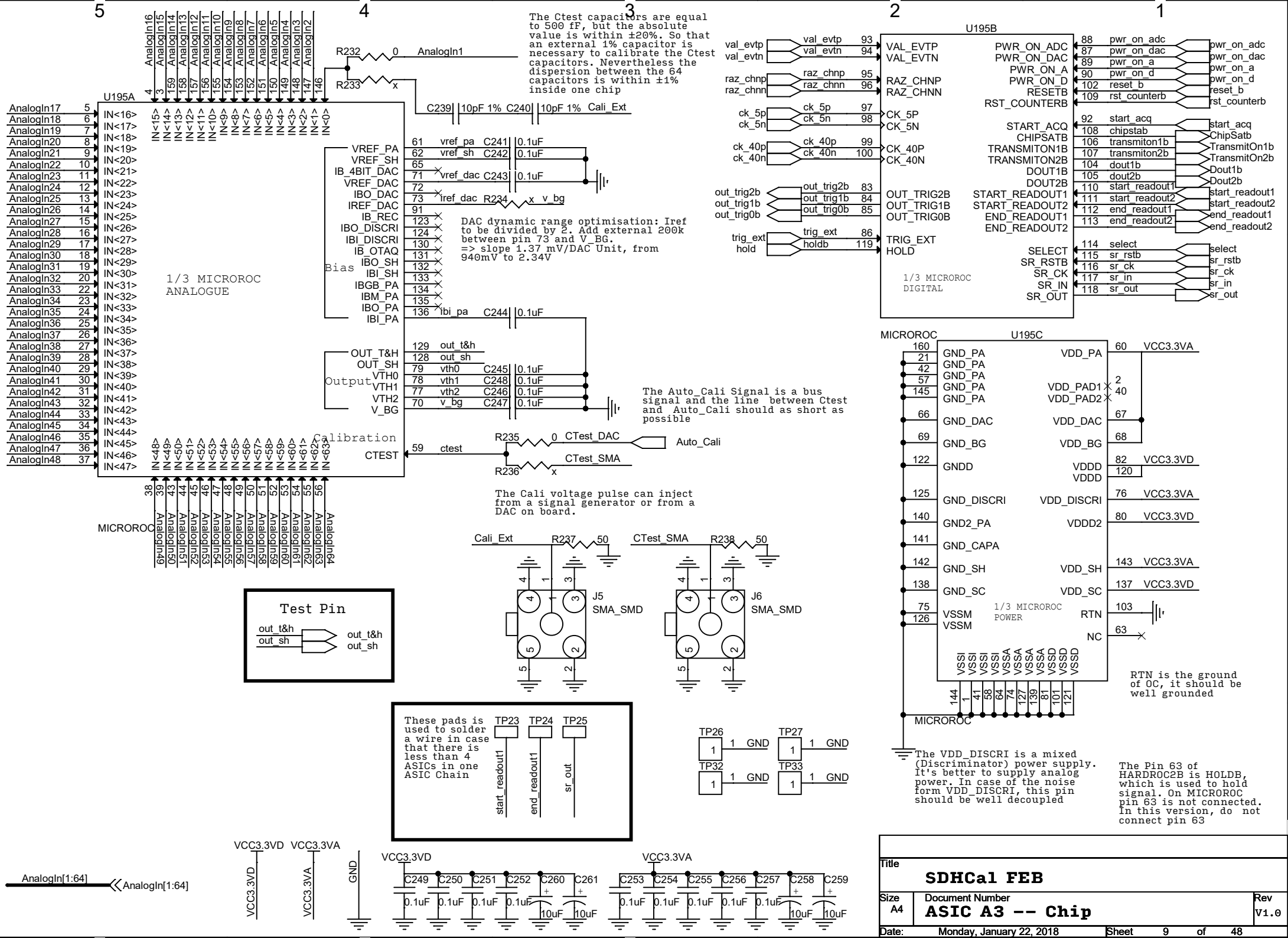
U195A
1/3 MICROROC ANALOGUE
Bias
Output
Calibration
MICROROC
The Ctest capacitors are equal to 500 fF, but the absolute value is within ±20%. So that an external 1% capacitor is necessary to calibrate the Ctest capacitors. Nevertheless the dispersion between the 64 capacitors is within ±1% inside one chip
DAC dynamic range optimisation: Iref to be divided by 2. Add external 200k between pin 73 and V_BG. => slope 1.37 mV/DAC Unit, from 940mV to 2.34V
The Auto_Cali Signal is a bus signal and the line between Ctest and Auto_Cali should as short as possible
The Cali voltage pulse can inject from a signal generator or from a DAC on board.
Test Pin
U195B
1/3 MICROROC DIGITAL
U195C
MICROROC
1/3 MICROROC POWER
These pads is used to solder a wire in case that there is less than 4 ASICs in one ASIC Chain
RTN is the ground of OC, it should be well grounded
The VDD_DISCRI is a mixed (Discriminator) power supply. It's better to supply analog power. In case of the noise form VDD_DISCRI, this pin should be well decoupled
The Pin 63 of HARDROC2B is HOLDB, which is used to hold signal. On MICROROC pin 63 is not connected. In this version, do not connect pin 63
SMA_SMD
AnalogIn[1:64]
SDHCal FEB
ASIC A3 -- Chip
Monday, January 22, 2018

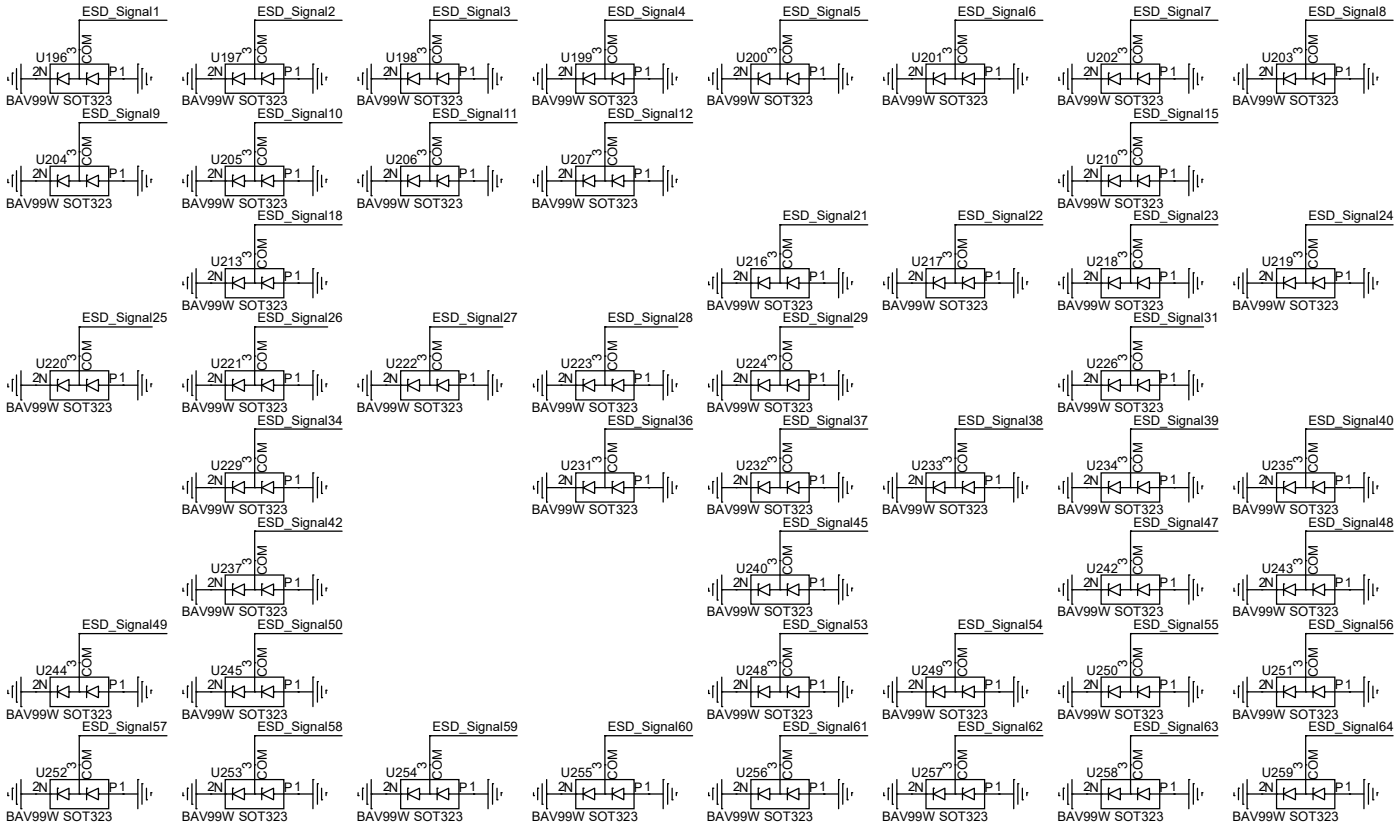

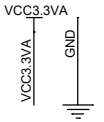

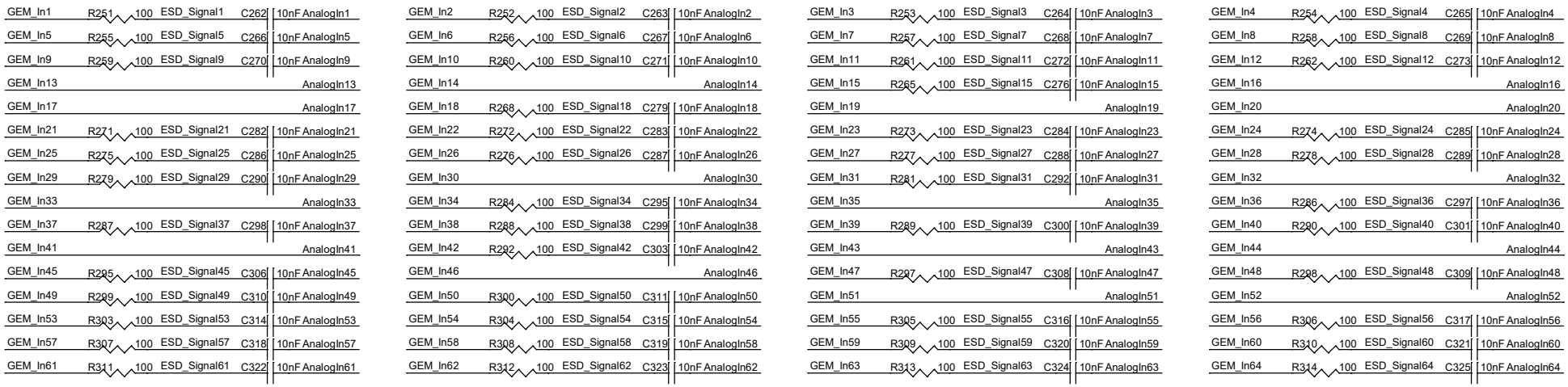

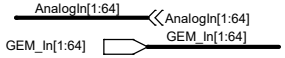

Title	SDHCal FEB	
Size: Custom	Document Number: ASIC A4 -- Analog In	Rev: V1.0
Date: Monday, January 22, 2018	Sheet 10 of 48	

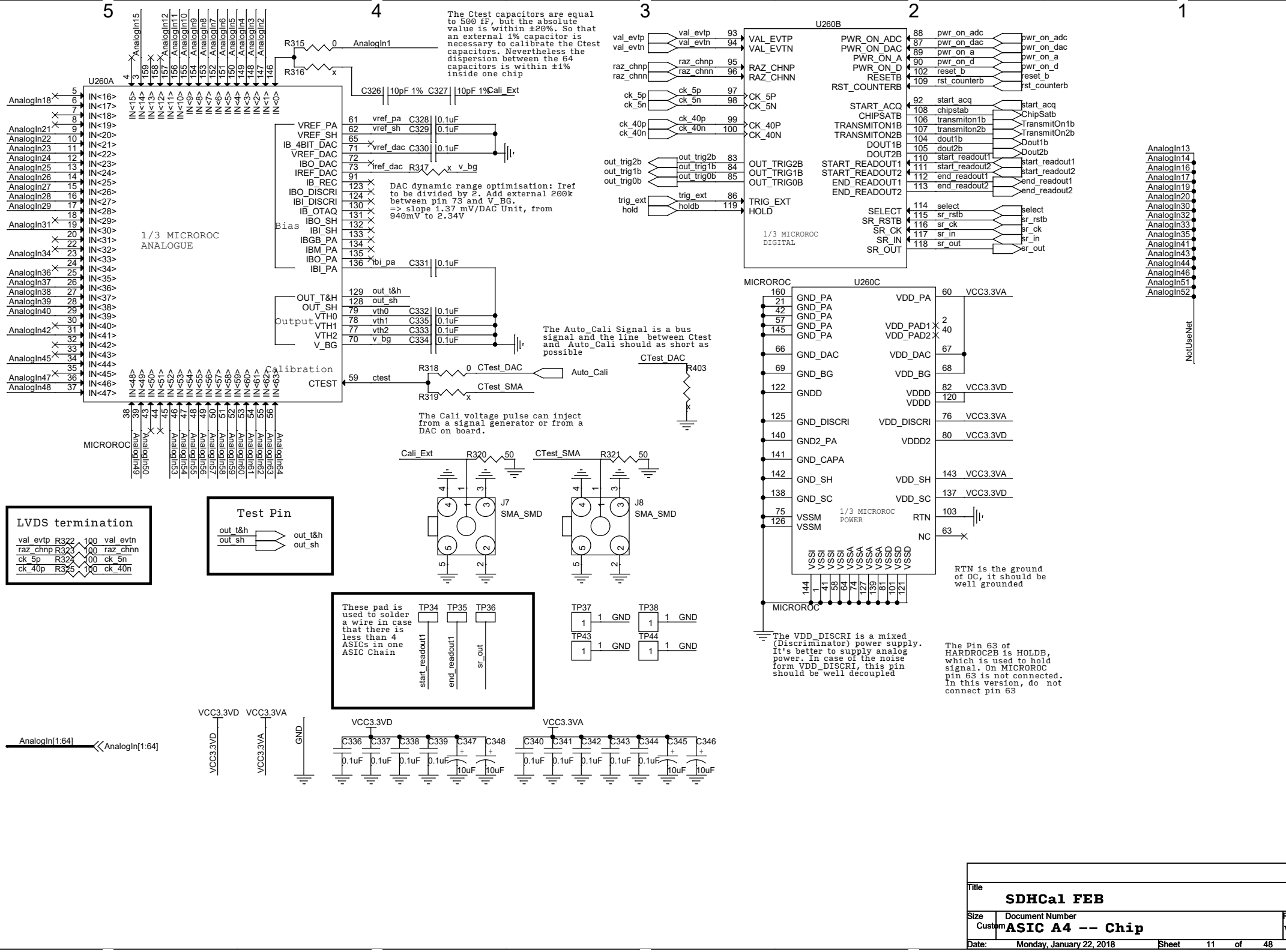
U260A
1/3 MICROROC
ANALOGUE
Bias
Output
Calibration
MICROROC
U260B
1/3 MICROROC
DIGITAL
U260C
1/3 MICROROC
POWER
R315 0 AnalogIn1
R316 x
C326 10pF 1% C327 10pF 1% Cali_Ext
R317 x v_bg
R318 0 CTest_DAC
R319 x CTest_SMA
R320 50
R321 50
R403
Auto_Cali
J7
SMA_SMD
J8
SMA_SMD
The Ctest capacitors are equal to 500 fF, but the absolute value is within ±20%. So that an external 1% capacitor is necessary to calibrate the Ctest capacitors. Nevertheless the dispersion between the 64 capacitors is within ±1% inside one chip
DAC dynamic range optimisation: Iref to be divided by 2. Add external 200k between pin 73 and V_BG. => slope 1.37 mV/DAC Unit, from 940mV to 2.34V
The Auto_Cali Signal is a bus signal and the line between Ctest and Auto_Cali should as short as possible
The Cali voltage pulse can inject from a signal generator or from a DAC on board.
LVDS termination
val_evtp R322 100 val_evtn
raz_chnp R323 100 raz_chnn
ck_5p R324 100 ck_5n
ck_40p R325 100 ck_40n
Test Pin
out_t&h
out_sh
These pad is used to solder a wire in case that there is less than 4 ASICs in one ASIC Chain
TP34 TP35 TP36
start_readout1
end_readout1
sr_out
TP37 TP38 TP43 TP44
GND
The VDD_DISCRI is a mixed (Discriminator) power supply. It's better to supply analog power. In case of the noise form VDD_DISCRI, this pin should be well decoupled
RTN is the ground of OC, it should be well grounded
The Pin 63 of HARDROC2B is HOLDB, which is used to hold signal. On MICROROC pin 63 is not connected. In this version, do not connect pin 63
NotUseNet
AnalogIn[1:64]
VCC3.3VD
VCC3.3VA
GND
C336 C337 C338 C339 C347 C348
C340 C341 C342 C343 C344 C345 C346
0.1uF
10uF
Title
SDHCal FEB
Size
Custom
Document Number
ASIC A4 -- Chip
Rev
V1.0
Date: Monday, January 22, 2018
Sheet 11 of 48

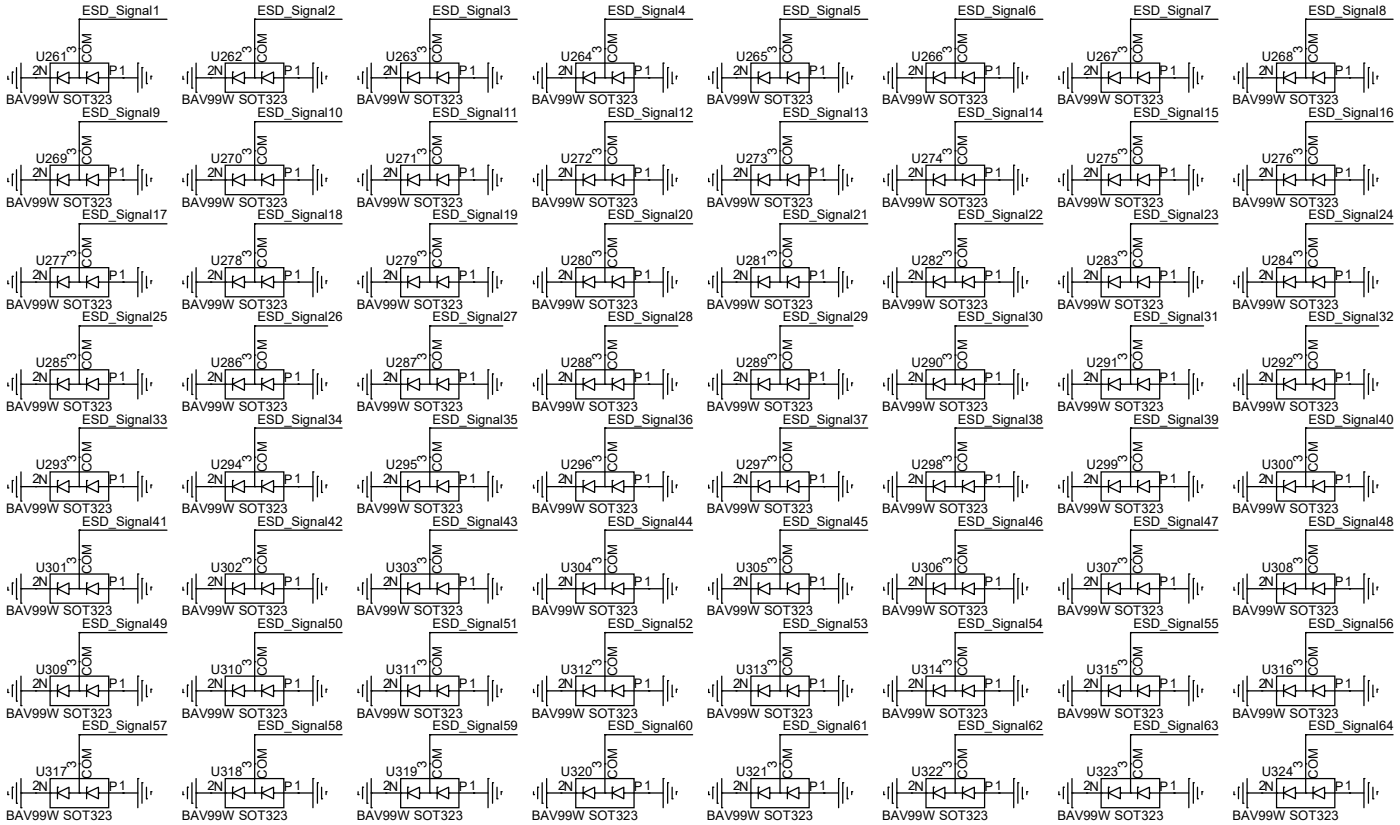

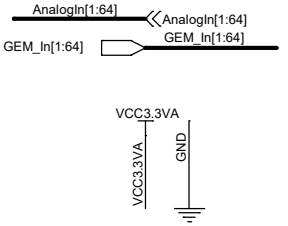

GEM_In1	R334	100	ESD_Signal1	C349	10nF AnalogIn1	GEM_In2	R335	100	ESD_Signal2	C350	10nF AnalogIn2	GEM_In3	R336	100	ESD_Signal3	C351	10nF AnalogIn3	GEM_In4	R337	100	ESD_Signal4	C352	10nF AnalogIn4
GEM_In5	R338	100	ESD_Signal5	C353	10nF AnalogIn5	GEM_In6	R339	100	ESD_Signal6	C354	10nF AnalogIn6	GEM_In7	R340	100	ESD_Signal7	C355	10nF AnalogIn7	GEM_In8	R341	100	ESD_Signal8	C356	10nF AnalogIn8
GEM_In9	R342	100	ESD_Signal9	C357	10nF AnalogIn9	GEM_In10	R343	100	ESD_Signal10	C358	10nF AnalogIn10	GEM_In11	R344	100	ESD_Signal11	C359	10nF AnalogIn11	GEM_In12	R345	100	ESD_Signal12	C360	10nF AnalogIn12
GEM_In13	R346	100	ESD_Signal13	C361	10nF AnalogIn13	GEM_In14	R347	100	ESD_Signal14	C362	10nF AnalogIn14	GEM_In15	R348	100	ESD_Signal15	C363	10nF AnalogIn15	GEM_In16	R349	100	ESD_Signal16	C364	10nF AnalogIn16
GEM_In17	R350	100	ESD_Signal17	C365	10nF AnalogIn17	GEM_In18	R351	100	ESD_Signal18	C366	10nF AnalogIn18	GEM_In19	R352	100	ESD_Signal19	C367	10nF AnalogIn19	GEM_In20	R353	100	ESD_Signal20	C368	10nF AnalogIn20
GEM_In21	R354	100	ESD_Signal21	C369	10nF AnalogIn21	GEM_In22	R355	100	ESD_Signal22	C370	10nF AnalogIn22	GEM_In23	R356	100	ESD_Signal23	C371	10nF AnalogIn23	GEM_In24	R357	100	ESD_Signal24	C372	10nF AnalogIn24
GEM_In25	R358	100	ESD_Signal25	C373	10nF AnalogIn25	GEM_In26	R359	100	ESD_Signal26	C374	10nF AnalogIn26	GEM_In27	R360	100	ESD_Signal27	C375	10nF AnalogIn27	GEM_In28	R361	100	ESD_Signal28	C376	10nF AnalogIn28
GEM_In29	R362	100	ESD_Signal29	C377	10nF AnalogIn29	GEM_In30	R363	100	ESD_Signal30	C378	10nF AnalogIn30	GEM_In31	R364	100	ESD_Signal31	C379	10nF AnalogIn31	GEM_In32	R365	100	ESD_Signal32	C380	10nF AnalogIn32
GEM_In33	R366	100	ESD_Signal33	C381	10nF AnalogIn33	GEM_In34	R367	100	ESD_Signal34	C382	10nF AnalogIn34	GEM_In35	R368	100	ESD_Signal35	C383	10nF AnalogIn35	GEM_In36	R369	100	ESD_Signal36	C384	10nF AnalogIn36
GEM_In37	R370	100	ESD_Signal37	C385	10nF AnalogIn37	GEM_In38	R371	100	ESD_Signal38	C386	10nF AnalogIn38	GEM_In39	R372	100	ESD_Signal39	C387	10nF AnalogIn39	GEM_In40	R373	100	ESD_Signal40	C388	10nF AnalogIn40
GEM_In41	R374	100	ESD_Signal41	C389	10nF AnalogIn41	GEM_In42	R375	100	ESD_Signal42	C390	10nF AnalogIn42	GEM_In43	R376	100	ESD_Signal43	C391	10nF AnalogIn43	GEM_In44	R377	100	ESD_Signal44	C392	10nF AnalogIn44
GEM_In45	R378	100	ESD_Signal45	C393	10nF AnalogIn45	GEM_In46	R379	100	ESD_Signal46	C394	10nF AnalogIn46	GEM_In47	R380	100	ESD_Signal47	C395	10nF AnalogIn47	GEM_In48	R381	100	ESD_Signal48	C396	10nF AnalogIn48
GEM_In49	R382	100	ESD_Signal49	C397	10nF AnalogIn49	GEM_In50	R383	100	ESD_Signal50	C398	10nF AnalogIn50	GEM_In51	R384	100	ESD_Signal51	C399	10nF AnalogIn51	GEM_In52	R385	100	ESD_Signal52	C400	10nF AnalogIn52
GEM_In53	R386	100	ESD_Signal53	C401	10nF AnalogIn53	GEM_In54	R387	100	ESD_Signal54	C402	10nF AnalogIn54	GEM_In55	R388	100	ESD_Signal55	C403	10nF AnalogIn55	GEM_In56	R389	100	ESD_Signal56	C404	10nF AnalogIn56
GEM_In57	R390	100	ESD_Signal57	C405	10nF AnalogIn57	GEM_In58	R391	100	ESD_Signal58	C406	10nF AnalogIn58	GEM_In59	R392	100	ESD_Signal59	C407	10nF AnalogIn59	GEM_In60	R393	100	ESD_Signal60	C408	10nF AnalogIn60
GEM_In61	R394	100	ESD_Signal61	C409	10nF AnalogIn61	GEM_In62	R395	100	ESD_Signal62	C410	10nF AnalogIn62	GEM_In63	R396	100	ESD_Signal63	C411	10nF AnalogIn63	GEM_In64	R397	100	ESD_Signal64	C412	10nF AnalogIn64

Title	SDHCal FEB		
Size: Custom	Document Number: ASIC B1 -- Analog In		Rev: V1.0
Date: Monday, January 22, 2018	Sheet 12 of 48		

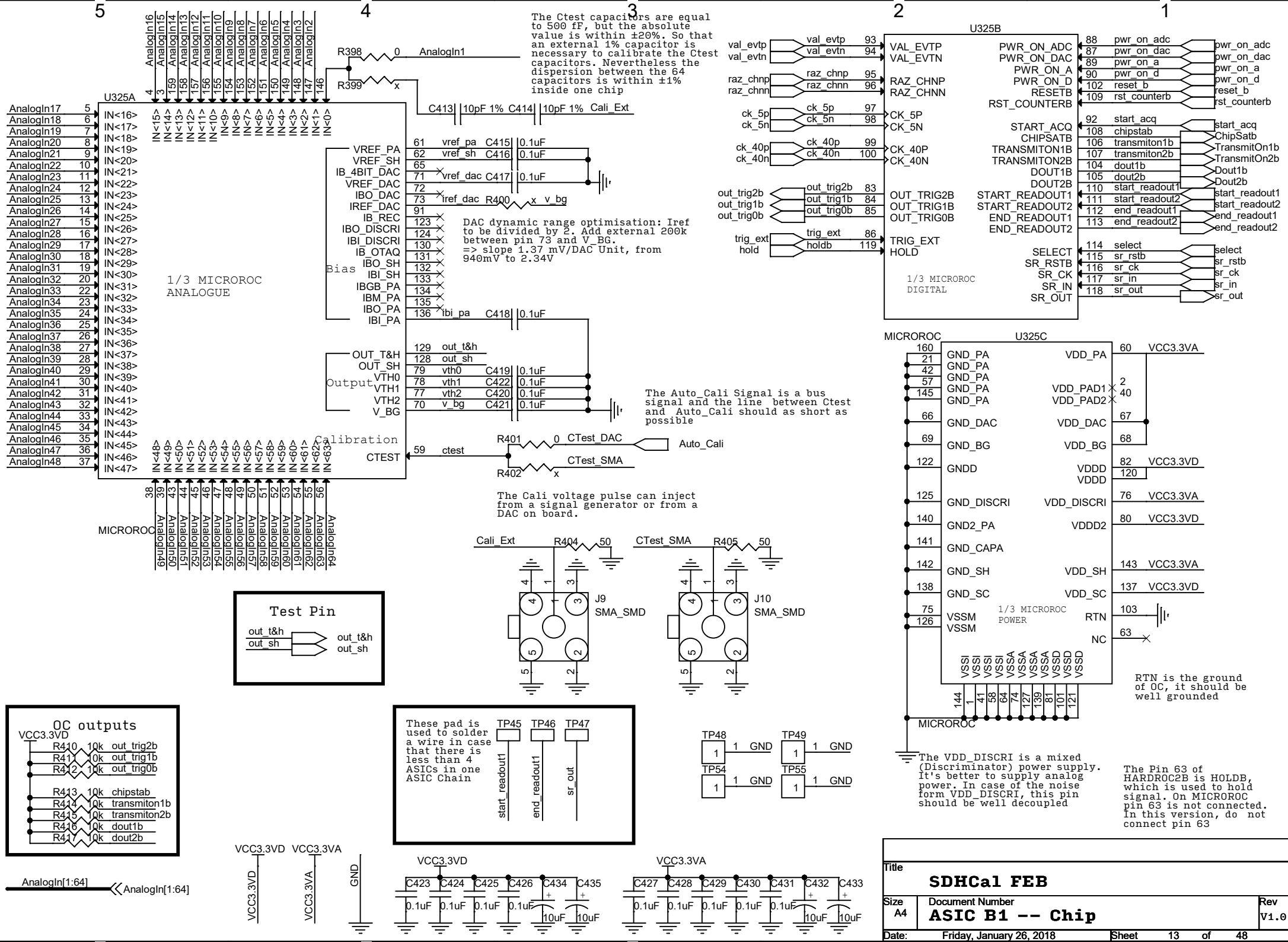
U325A
1/3 MICROROC ANALOGUE
Bias
Output
Calibration
The Ctest capacitors are equal to 500 fF, but the absolute value is within ±20%. So that an external 1% capacitor is necessary to calibrate the Ctest capacitors. Nevertheless the dispersion between the 64 capacitors is within ±1% inside one chip
DAC dynamic range optimisation: Iref to be divided by 2. Add external 200k between pin 73 and V_BG. => slope 1.37 mV/DAC Unit, from 940mV to 2.34V
The Auto_Cali Signal is a bus signal and the line between Ctest and Auto_Cali should as short as possible
The Cali voltage pulse can inject from a signal generator or from a DAC on board.
U325B
1/3 MICROROC DIGITAL
U325C
MICROROC
1/3 MICROROC POWER
RTN is the ground of OC, it should be well grounded
The VDD_DISCRI is a mixed (Discriminator) power supply. It's better to supply analog power. In case of the noise form VDD_DISCRI, this pin should be well decoupled
The Pin 63 of HARDROC2B is HOLDB, which is used to hold signal. On MICROROC pin 63 is not connected. In this version, do not connect pin 63
Test Pin
OC outputs
These pad is used to solder a wire in case that there is less than 4 ASICs in one ASIC Chain
Title
SDHCal FEB
Size A4
Document Number
ASIC B1 -- Chip
Rev V1.0
Date: Friday, January 26, 2018
Sheet 13 of 48

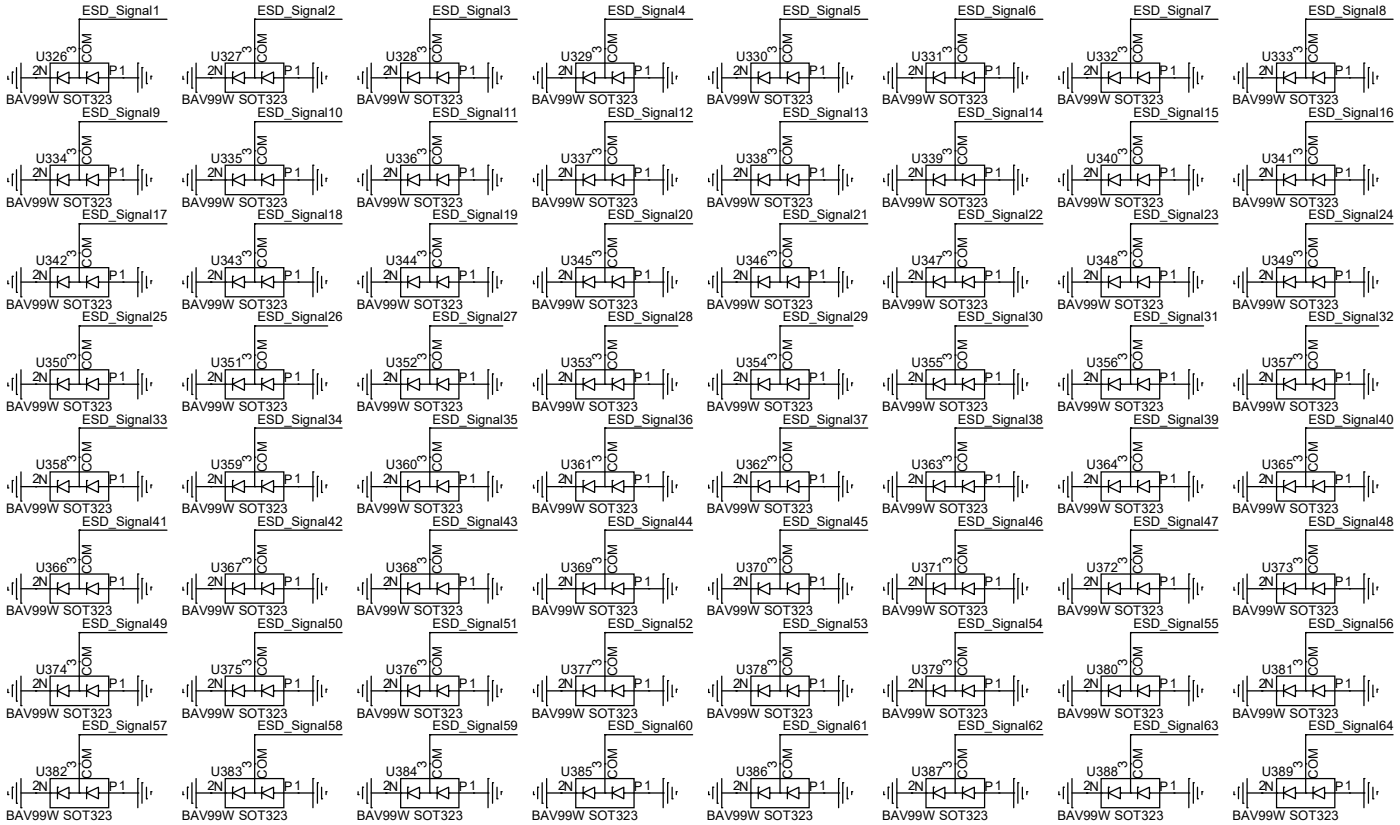

AnalogIn[1:64] AnalogIn[1:64]

GEM_In[1:64] GEM_In[1:64]

VCC3.3VA

VCC3.3VA GND

GEM_In1	R418	100	ESD_Signal1	C436	10nF AnalogIn1	GEM_In2	R419	100	ESD_Signal2	C437	10nF AnalogIn2	GEM_In3	R420	100	ESD_Signal3	C438	10nF AnalogIn3	GEM_In4	R421	100	ESD_Signal4	C439	10nF AnalogIn4
GEM_In5	R422	100	ESD_Signal5	C440	10nF AnalogIn5	GEM_In6	R423	100	ESD_Signal6	C441	10nF AnalogIn6	GEM_In7	R424	100	ESD_Signal7	C442	10nF AnalogIn7	GEM_In8	R425	100	ESD_Signal8	C443	10nF AnalogIn8
GEM_In9	R426	100	ESD_Signal9	C444	10nF AnalogIn9	GEM_In10	R427	100	ESD_Signal10	C445	10nF AnalogIn10	GEM_In11	R428	100	ESD_Signal11	C446	10nF AnalogIn11	GEM_In12	R429	100	ESD_Signal12	C447	10nF AnalogIn12
GEM_In13	R430	100	ESD_Signal13	C448	10nF AnalogIn13	GEM_In14	R431	100	ESD_Signal14	C449	10nF AnalogIn14	GEM_In15	R432	100	ESD_Signal15	C450	10nF AnalogIn15	GEM_In16	R433	100	ESD_Signal16	C451	10nF AnalogIn16
GEM_In17	R434	100	ESD_Signal17	C452	10nF AnalogIn17	GEM_In18	R435	100	ESD_Signal18	C453	10nF AnalogIn18	GEM_In19	R436	100	ESD_Signal19	C454	10nF AnalogIn19	GEM_In20	R437	100	ESD_Signal20	C455	10nF AnalogIn20
GEM_In21	R438	100	ESD_Signal21	C456	10nF AnalogIn21	GEM_In22	R439	100	ESD_Signal22	C457	10nF AnalogIn22	GEM_In23	R440	100	ESD_Signal23	C458	10nF AnalogIn23	GEM_In24	R441	100	ESD_Signal24	C459	10nF AnalogIn24
GEM_In25	R442	100	ESD_Signal25	C460	10nF AnalogIn25	GEM_In26	R443	100	ESD_Signal26	C461	10nF AnalogIn26	GEM_In27	R444	100	ESD_Signal27	C462	10nF AnalogIn27	GEM_In28	R445	100	ESD_Signal28	C463	10nF AnalogIn28
GEM_In29	R446	100	ESD_Signal29	C464	10nF AnalogIn29	GEM_In30	R447	100	ESD_Signal30	C465	10nF AnalogIn30	GEM_In31	R448	100	ESD_Signal31	C466	10nF AnalogIn31	GEM_In32	R449	100	ESD_Signal32	C467	10nF AnalogIn32
GEM_In33	R450	100	ESD_Signal33	C468	10nF AnalogIn33	GEM_In34	R451	100	ESD_Signal34	C469	10nF AnalogIn34	GEM_In35	R452	100	ESD_Signal35	C470	10nF AnalogIn35	GEM_In36	R453	100	ESD_Signal36	C471	10nF AnalogIn36
GEM_In37	R454	100	ESD_Signal37	C472	10nF AnalogIn37	GEM_In38	R455	100	ESD_Signal38	C473	10nF AnalogIn38	GEM_In39	R456	100	ESD_Signal39	C474	10nF AnalogIn39	GEM_In40	R457	100	ESD_Signal40	C475	10nF AnalogIn40
GEM_In41	R458	100	ESD_Signal41	C476	10nF AnalogIn41	GEM_In42	R459	100	ESD_Signal42	C477	10nF AnalogIn42	GEM_In43	R460	100	ESD_Signal43	C478	10nF AnalogIn43	GEM_In44	R461	100	ESD_Signal44	C479	10nF AnalogIn44
GEM_In45	R462	100	ESD_Signal45	C480	10nF AnalogIn45	GEM_In46	R463	100	ESD_Signal46	C481	10nF AnalogIn46	GEM_In47	R464	100	ESD_Signal47	C482	10nF AnalogIn47	GEM_In48	R465	100	ESD_Signal48	C483	10nF AnalogIn48
GEM_In49	R466	100	ESD_Signal49	C484	10nF AnalogIn49	GEM_In50	R467	100	ESD_Signal50	C485	10nF AnalogIn50	GEM_In51	R468	100	ESD_Signal51	C486	10nF AnalogIn51	GEM_In52	R469	100	ESD_Signal52	C487	10nF AnalogIn52
GEM_In53	R470	100	ESD_Signal53	C488	10nF AnalogIn53	GEM_In54	R471	100	ESD_Signal54	C489	10nF AnalogIn54	GEM_In55	R472	100	ESD_Signal55	C490	10nF AnalogIn55	GEM_In56	R473	100	ESD_Signal56	C491	10nF AnalogIn56
GEM_In57	R474	100	ESD_Signal57	C492	10nF AnalogIn57	GEM_In58	R475	100	ESD_Signal58	C493	10nF AnalogIn58	GEM_In59	R476	100	ESD_Signal59	C494	10nF AnalogIn59	GEM_In60	R477	100	ESD_Signal60	C495	10nF AnalogIn60
GEM_In61	R478	100	ESD_Signal61	C496	10nF AnalogIn61	GEM_In62	R479	100	ESD_Signal62	C497	10nF AnalogIn62	GEM_In63	R480	100	ESD_Signal63	C498	10nF AnalogIn63	GEM_In64	R481	100	ESD_Signal64	C499	10nF AnalogIn64

Title	SDHCal FEB	
Size: Custom	Document Number: ASIC B2 -- Analog In	Rev: V1.0
Date: Monday, January 22, 2018	Sheet 14 of 48	

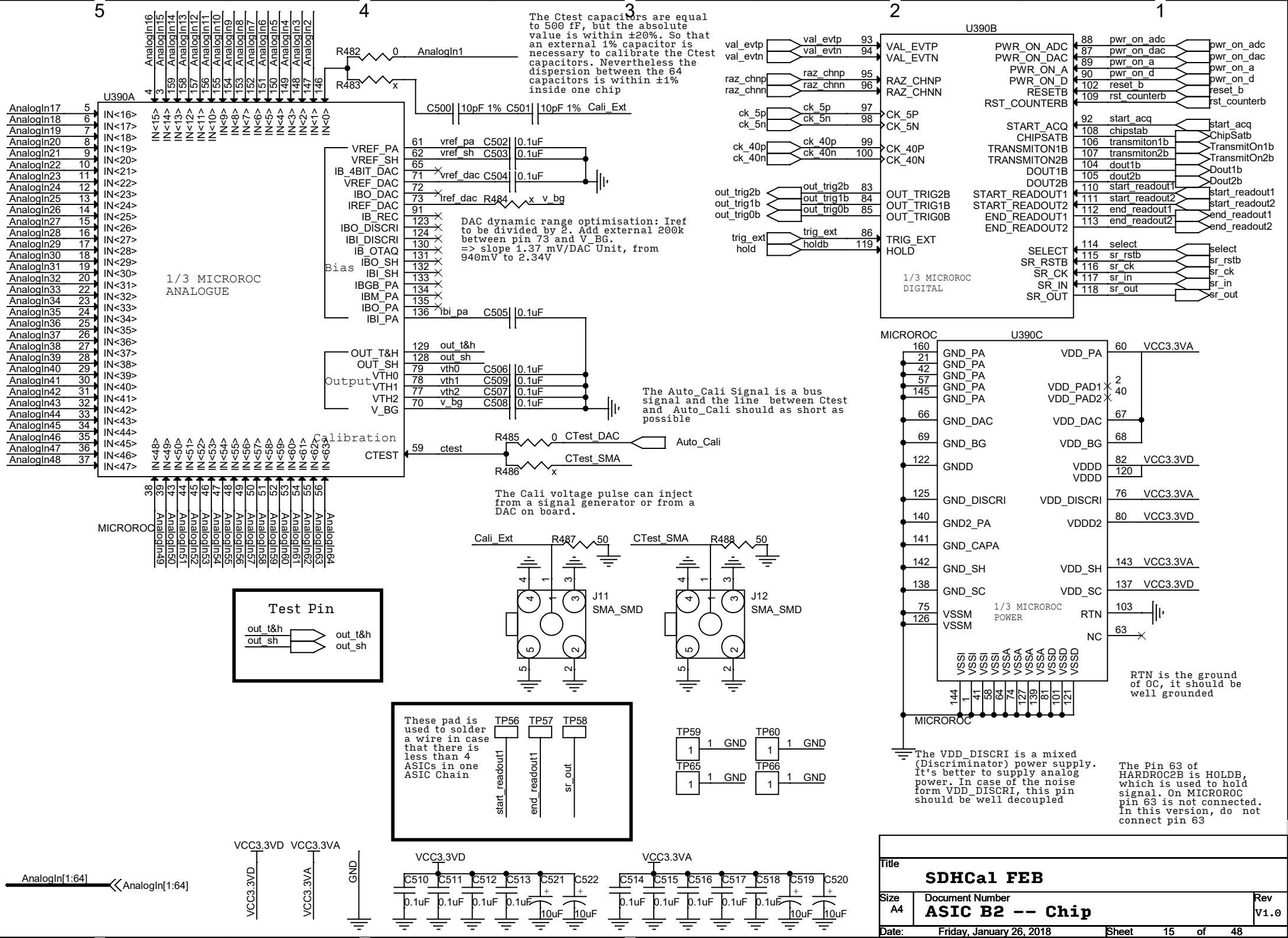
U390A
1/3 MICROROC ANALOGUE
U390B
1/3 MICROROC DIGITAL
U390C
1/3 MICROROC POWER
MICROROC
Bias
Output
Calibration
The Ctest capacitors are equal to 500 fF, but the absolute value is within ±20%. So that an external 1% capacitor is necessary to calibrate the Ctest capacitors. Nevertheless the dispersion between the 64 capacitors is within ±1% inside one chip
DAC dynamic range optimisation: Iref to be divided by 2. Add external 200k between pin 73 and V_BG. => slope 1.37 mV/DAC Unit, from 940mV to 2.34V
The Auto_Cali Signal is a bus signal and the line between Ctest and Auto_Cali should as short as possible
The Cali voltage pulse can inject from a signal generator or from a DAC on board.
Test Pin
These pad is used to solder a wire in case that there is less than 4 ASICs in one ASIC Chain
RTN is the ground of OC, it should be well grounded
The VDD_DISCRI is a mixed (Discriminator) power supply. It's better to supply analog power. In case of the noise form VDD_DISCRI, this pin should be well decoupled
The Pin 63 of HARDROC2B is HOLDB, which is used to hold signal. On MICROROC pin 63 is not connected. In this version, do not connect pin 63
SDHCal FEB
ASIC B2 -- Chip
Friday, January 26, 2018
Sheet 15 of 48

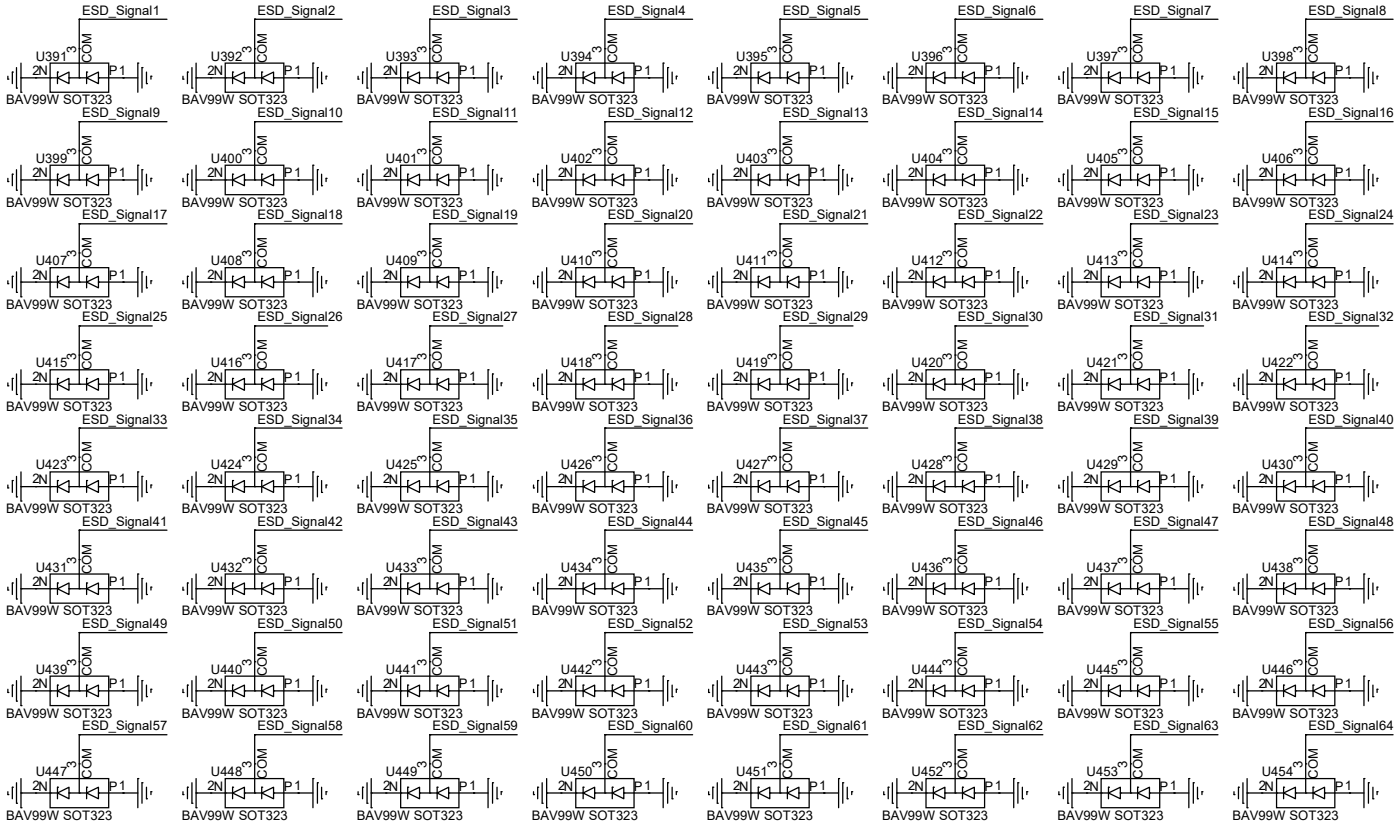

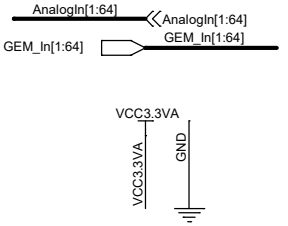

GEM_In1	R501 100	ESD_Signal1	C523 10nF	AnalogIn1	GEM_In2	R502 100	ESD_Signal2	C524 10nF	AnalogIn2
GEM_In5	R505 100	ESD_Signal5	C527 10nF	AnalogIn5	GEM_In6	R506 100	ESD_Signal6	C528 10nF	AnalogIn6
GEM_In9	R509 100	ESD_Signal9	C531 10nF	AnalogIn9	GEM_In10	R510 100	ESD_Signal10	C532 10nF	AnalogIn10
GEM_In13	R513 100	ESD_Signal13	C535 10nF	AnalogIn13	GEM_In14	R514 100	ESD_Signal14	C536 10nF	AnalogIn14
GEM_In17	R517 100	ESD_Signal17	C539 10nF	AnalogIn17	GEM_In18	R518 100	ESD_Signal18	C540 10nF	AnalogIn18
GEM_In21	R521 100	ESD_Signal21	C543 10nF	AnalogIn21	GEM_In22	R522 100	ESD_Signal22	C544 10nF	AnalogIn22
GEM_In25	R525 100	ESD_Signal25	C547 10nF	AnalogIn25	GEM_In26	R526 100	ESD_Signal26	C548 10nF	AnalogIn26
GEM_In29	R529 100	ESD_Signal29	C551 10nF	AnalogIn29	GEM_In30	R530 100	ESD_Signal30	C552 10nF	AnalogIn30
GEM_In33	R533 100	ESD_Signal33	C555 10nF	AnalogIn33	GEM_In34	R534 100	ESD_Signal34	C556 10nF	AnalogIn34
GEM_In37	R537 100	ESD_Signal37	C559 10nF	AnalogIn37	GEM_In38	R538 100	ESD_Signal38	C560 10nF	AnalogIn38
GEM_In41	R541 100	ESD_Signal41	C563 10nF	AnalogIn41	GEM_In42	R542 100	ESD_Signal42	C564 10nF	AnalogIn42
GEM_In45	R545 100	ESD_Signal45	C567 10nF	AnalogIn45	GEM_In46	R546 100	ESD_Signal46	C568 10nF	AnalogIn46
GEM_In49	R549 100	ESD_Signal49	C571 10nF	AnalogIn49	GEM_In50	R550 100	ESD_Signal50	C572 10nF	AnalogIn50
GEM_In53	R553 100	ESD_Signal53	C575 10nF	AnalogIn53	GEM_In54	R554 100	ESD_Signal54	C576 10nF	AnalogIn54
GEM_In57	R557 100	ESD_Signal57	C579 10nF	AnalogIn57	GEM_In58	R558 100	ESD_Signal58	C580 10nF	AnalogIn58
GEM_In61	R561 100	ESD_Signal61	C583 10nF	AnalogIn61	GEM_In62	R562 100	ESD_Signal62	C584 10nF	AnalogIn62

GEM_In3	R503 100	ESD_Signal3	C525 10nF	AnalogIn3	GEM_In4	R504 100	ESD_Signal4	C526 10nF	AnalogIn4
GEM_In7	R507 100	ESD_Signal7	C529 10nF	AnalogIn7	GEM_In8	R508 100	ESD_Signal8	C530 10nF	AnalogIn8
GEM_In11	R511 100	ESD_Signal11	C533 10nF	AnalogIn11	GEM_In12	R512 100	ESD_Signal12	C534 10nF	AnalogIn12
GEM_In15	R515 100	ESD_Signal15	C537 10nF	AnalogIn15	GEM_In16	R516 100	ESD_Signal16	C538 10nF	AnalogIn16
GEM_In19	R519 100	ESD_Signal19	C541 10nF	AnalogIn19	GEM_In20	R520 100	ESD_Signal20	C542 10nF	AnalogIn20
GEM_In23	R523 100	ESD_Signal23	C545 10nF	AnalogIn23	GEM_In24	R524 100	ESD_Signal24	C546 10nF	AnalogIn24
GEM_In27	R527 100	ESD_Signal27	C549 10nF	AnalogIn27	GEM_In28	R528 100	ESD_Signal28	C550 10nF	AnalogIn28
GEM_In31	R531 100	ESD_Signal31	C553 10nF	AnalogIn31	GEM_In32	R532 100	ESD_Signal32	C554 10nF	AnalogIn32
GEM_In35	R535 100	ESD_Signal35	C557 10nF	AnalogIn35	GEM_In36	R536 100	ESD_Signal36	C558 10nF	AnalogIn36
GEM_In39	R539 100	ESD_Signal39	C561 10nF	AnalogIn39	GEM_In40	R540 100	ESD_Signal40	C562 10nF	AnalogIn40
GEM_In43	R543 100	ESD_Signal43	C565 10nF	AnalogIn43	GEM_In44	R544 100	ESD_Signal44	C566 10nF	AnalogIn44
GEM_In47	R547 100	ESD_Signal47	C569 10nF	AnalogIn47	GEM_In48	R548 100	ESD_Signal48	C570 10nF	AnalogIn48
GEM_In51	R551 100	ESD_Signal51	C573 10nF	AnalogIn51	GEM_In52	R552 100	ESD_Signal52	C574 10nF	AnalogIn52
GEM_In55	R555 100	ESD_Signal55	C577 10nF	AnalogIn55	GEM_In56	R556 100	ESD_Signal56	C578 10nF	AnalogIn56
GEM_In59	R559 100	ESD_Signal59	C581 10nF	AnalogIn59	GEM_In60	R560 100	ESD_Signal60	C582 10nF	AnalogIn60
GEM_In63	R563 100	ESD_Signal63	C585 10nF	AnalogIn63	GEM_In64	R564 100	ESD_Signal64	C586 10nF	AnalogIn64

Title	SDHCal FEB		
Size	Document Number		Rev
Custom	ASIC B3 -- Analog In		V1.0
Date:	Monday, January 22, 2018	Sheet 16 of 48	

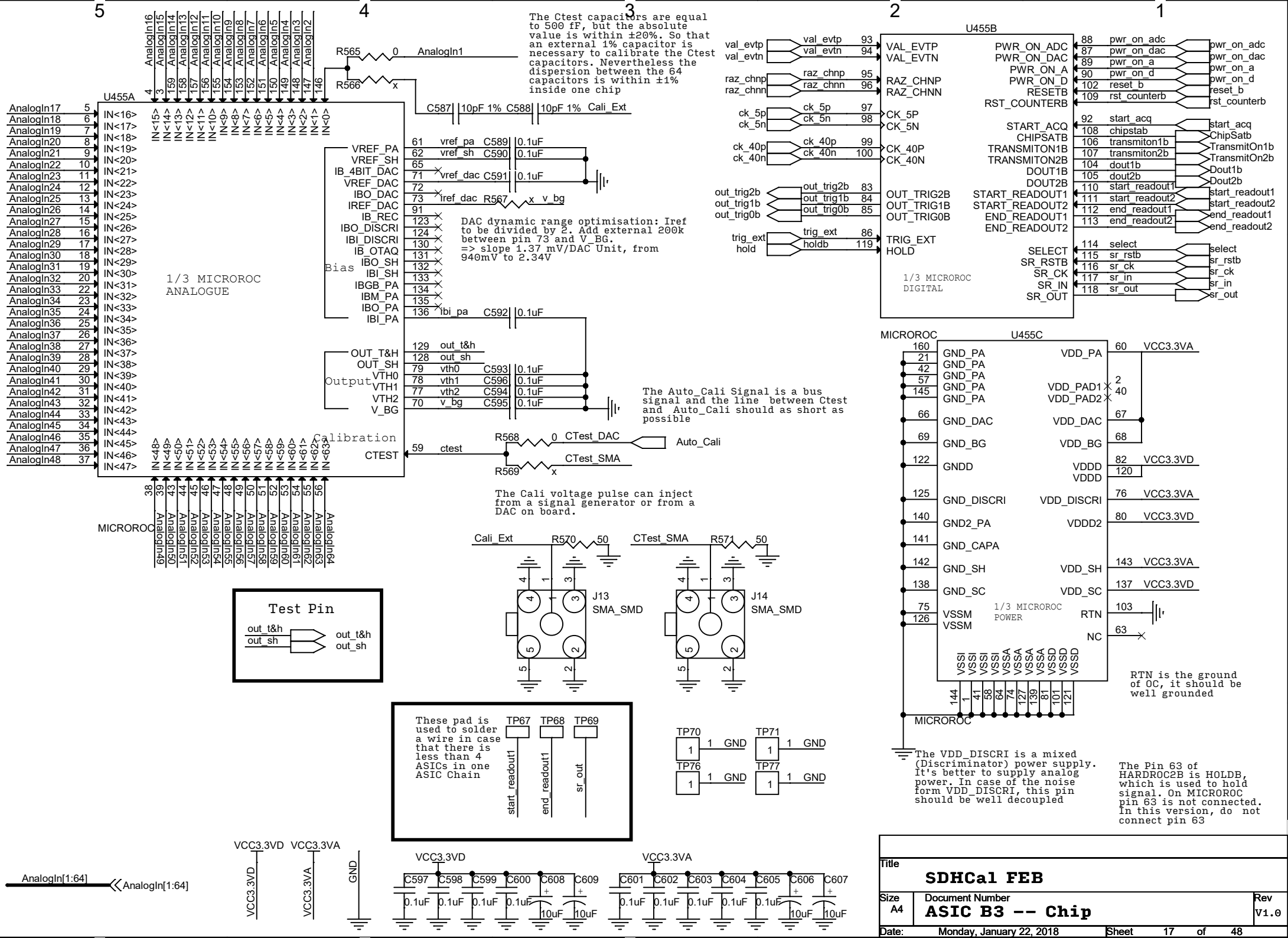
5
4
3
2
1
D
C
B
A
U455A
1/3 MICROROC
ANALOGUE
Bias
Output
Calibration
MICROROC
U455B
1/3 MICROROC
DIGITAL
U455C
1/3 MICROROC
POWER
MICROROC
The Ctest capacitors are equal to 500 fF, but the absolute value is within ±20%. So that an external 1% capacitor is necessary to calibrate the Ctest capacitors. Nevertheless the dispersion between the 64 capacitors is within ±1% inside one chip
DAC dynamic range optimisation: Iref to be divided by 2. Add external 200k between pin 73 and V_BG.
=> slope 1.37 mV/DAC Unit, from 940mV to 2.34V
The Auto_Cali Signal is a bus signal and the line between Ctest and Auto_Cali should as short as possible
The Cali voltage pulse can inject from a signal generator or from a DAC on board.
Test Pin
These pad is used to solder a wire in case that there is less than 4 ASICs in one ASIC Chain
RTN is the ground of OC, it should be well grounded
The VDD_DISCRI is a mixed (Discriminator) power supply. It's better to supply analog power. In case of the noise form VDD_DISCRI, this pin should be well decoupled
The Pin 63 of HARDROC2B is HOLDB, which is used to hold signal. On MICROROC pin 63 is not connected. In this version, do not connect pin 63
AnalogIn[1:64]
SDHCal FEB
ASIC B3 -- Chip
Monday, January 22, 2018

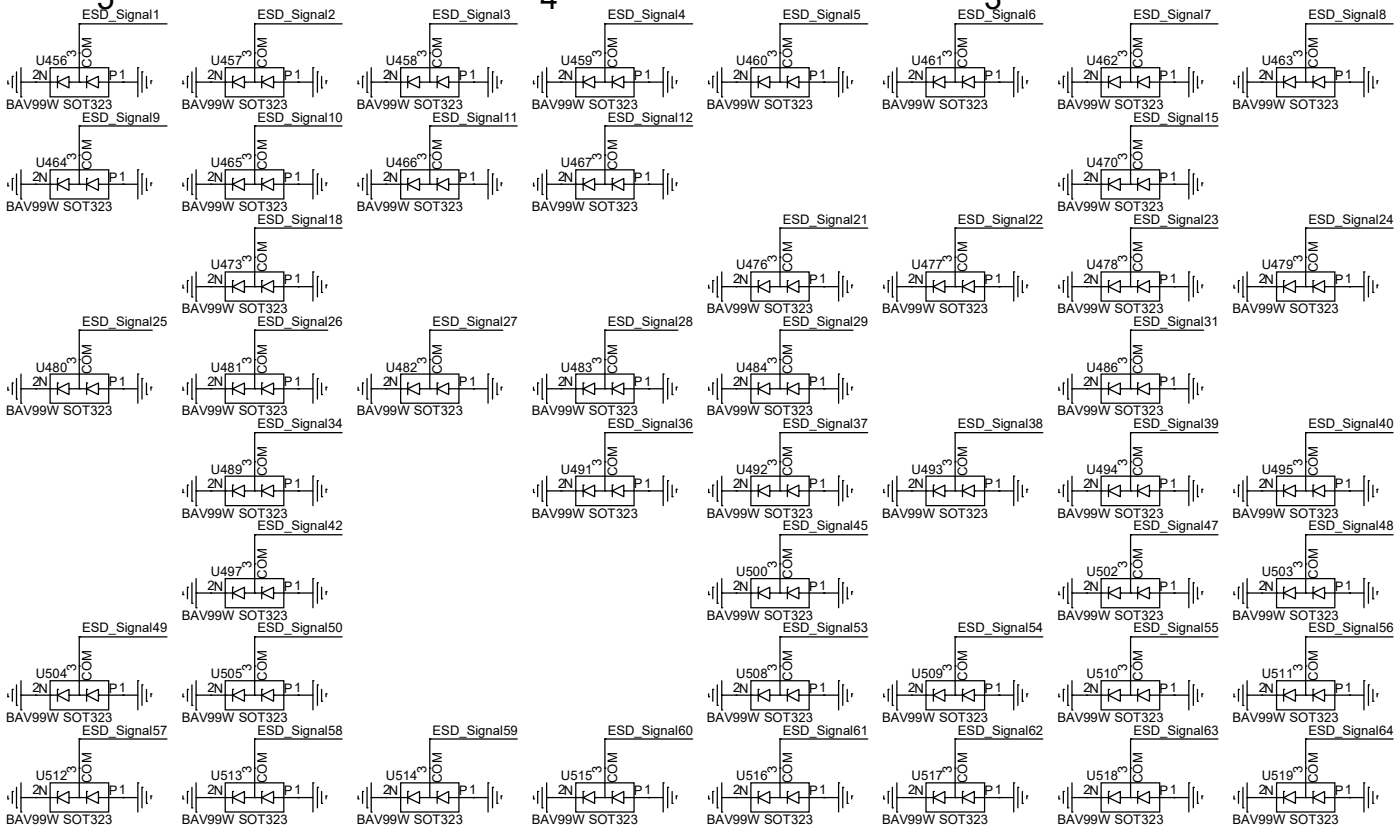

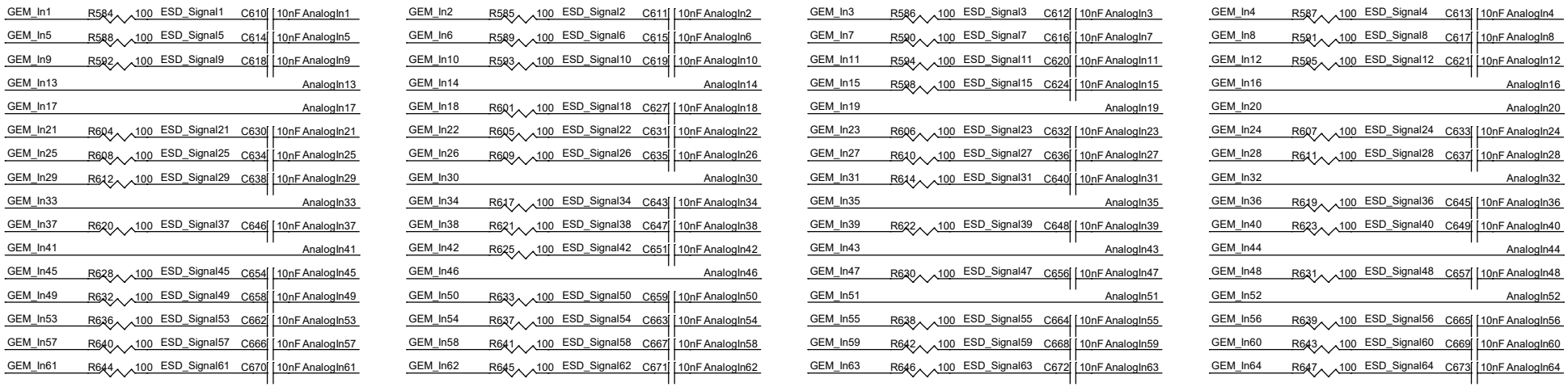

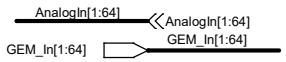

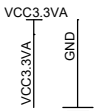

Title	SDHCal FEB	
Size: Custom	Document Number: ASIC B4 -- Analog In	Rev: V1.0
Date: Monday, January 22, 2018	Sheet 18 of 48	

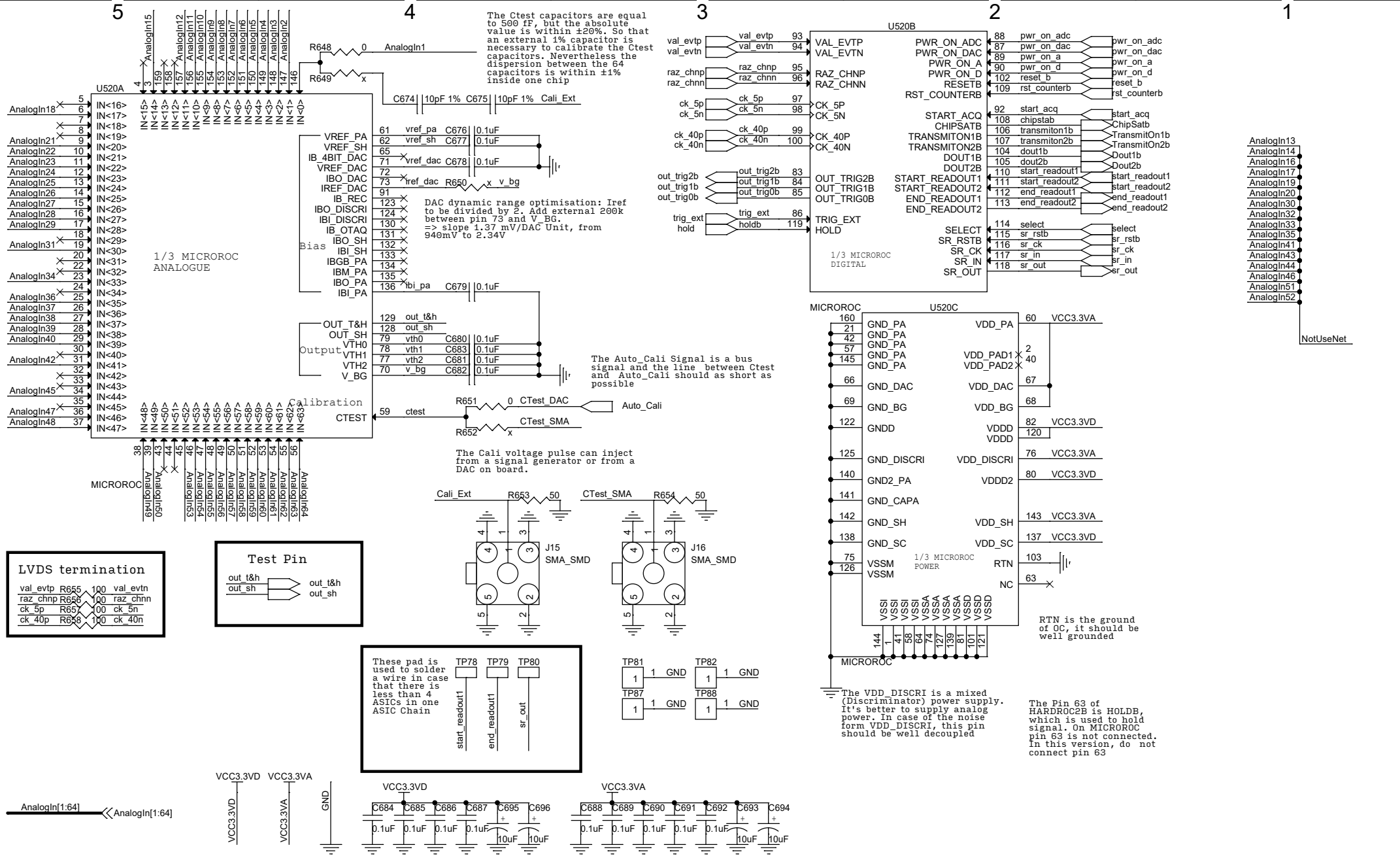

Title	SDHCal FEB
Size	Custom
Document Number	ASIC B4 -- Chip
Rev	V1.0
Date:	Monday, January 22, 2018
Sheet	19 of 48

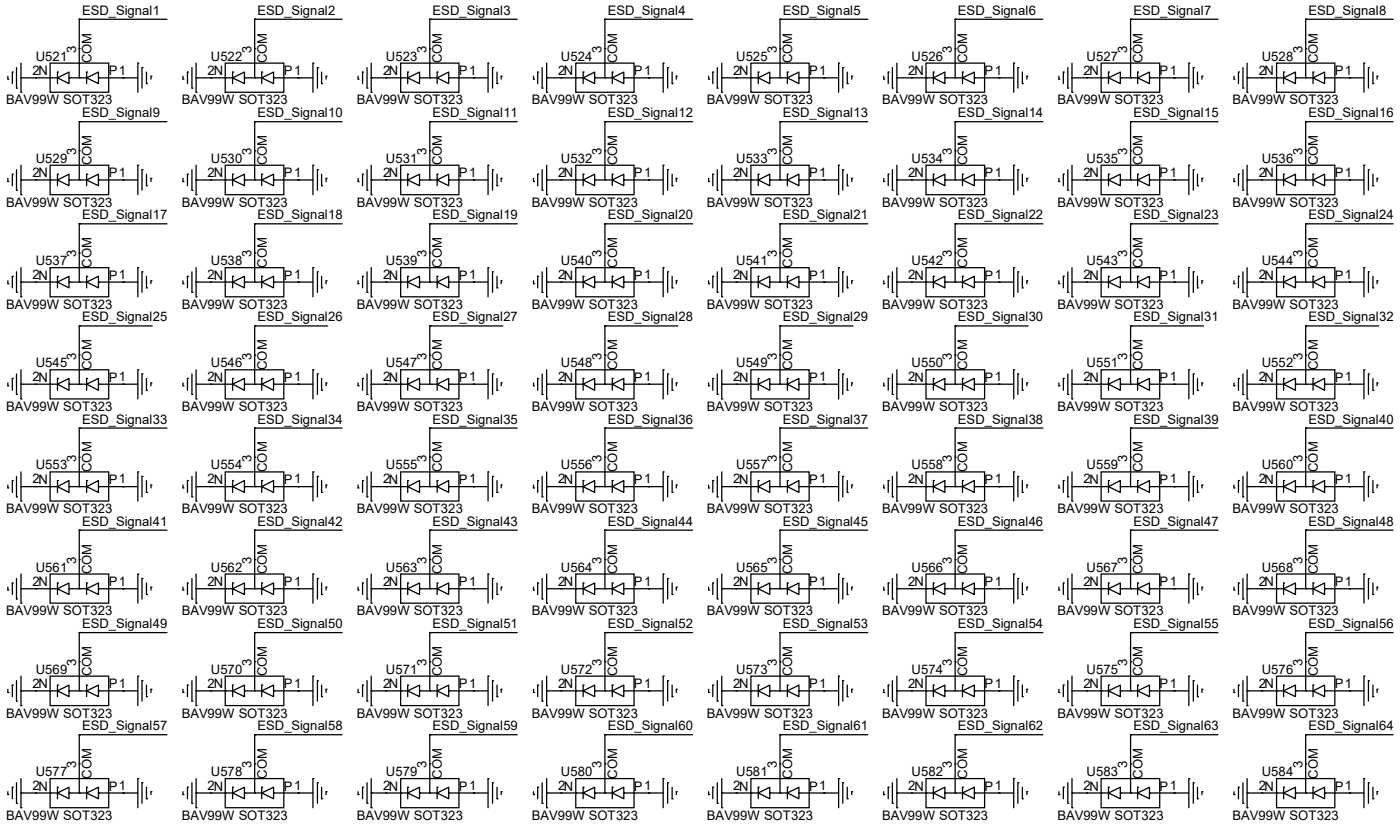

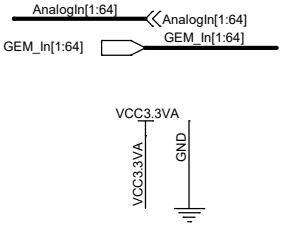

GEM_In1	R667 100	ESD_Signal1	C697	10nF	AnalogIn1		
GEM_In5	R671 100	ESD_Signal5	C701	10nF	AnalogIn5		
GEM_In9	R675 100	ESD_Signal9	C705	10nF	AnalogIn9		
GEM_In13	R679 100	ESD_Signal13	C709	10nF	AnalogIn13		
GEM_In17	R683 100	ESD_Signal17	C713	10nF	AnalogIn17		
GEM_In21	R687 100	ESD_Signal21	C717	10nF	AnalogIn21		
GEM_In25	R691 100	ESD_Signal25	C721	10nF	AnalogIn25		
GEM_In29	R695 100	ESD_Signal29	C725	10nF	AnalogIn29		
GEM_In33	R699 100	ESD_Signal33	C729	10nF	AnalogIn33		
GEM_In37	R703 100	ESD_Signal37	C733	10nF	AnalogIn37		
GEM_In41	R707 100	ESD_Signal41	C737	10nF	AnalogIn41		
GEM_In45	R711 100	ESD_Signal45	C741	10nF	AnalogIn45		
GEM_In49	R715 100	ESD_Signal49	C745	10nF	AnalogIn49		
GEM_In53	R719 100	ESD_Signal53	C749	10nF	AnalogIn53		
GEM_In57	R723 100	ESD_Signal57	C753	10nF	AnalogIn57		
GEM_In61	R727 100	ESD_Signal61	C757	10nF	AnalogIn61		

GEM_In2	R668 100	ESD_Signal2	C698	10nF	AnalogIn2		
GEM_In6	R672 100	ESD_Signal6	C702	10nF	AnalogIn6		
GEM_In10	R676 100	ESD_Signal10	C706	10nF	AnalogIn10		
GEM_In14	R680 100	ESD_Signal14	C710	10nF	AnalogIn14		
GEM_In18	R684 100	ESD_Signal18	C714	10nF	AnalogIn18		
GEM_In22	R688 100	ESD_Signal22	C718	10nF	AnalogIn22		
GEM_In26	R692 100	ESD_Signal26	C722	10nF	AnalogIn26		
GEM_In30	R696 100	ESD_Signal30	C726	10nF	AnalogIn30		
GEM_In34	R700 100	ESD_Signal34	C730	10nF	AnalogIn34		
GEM_In38	R704 100	ESD_Signal38	C734	10nF	AnalogIn38		
GEM_In42	R708 100	ESD_Signal42	C738	10nF	AnalogIn42		
GEM_In46	R712 100	ESD_Signal46	C742	10nF	AnalogIn46		
GEM_In50	R716 100	ESD_Signal50	C746	10nF	AnalogIn50		
GEM_In54	R720 100	ESD_Signal54	C750	10nF	AnalogIn54		
GEM_In58	R724 100	ESD_Signal58	C754	10nF	AnalogIn58		
GEM_In62	R728 100	ESD_Signal62	C758	10nF	AnalogIn62		

GEM_In3	R669 100	ESD_Signal3	C699	10nF	AnalogIn3		
GEM_In7	R673 100	ESD_Signal7	C703	10nF	AnalogIn7		
GEM_In11	R677 100	ESD_Signal11	C707	10nF	AnalogIn11		
GEM_In15	R681 100	ESD_Signal15	C711	10nF	AnalogIn15		
GEM_In19	R685 100	ESD_Signal19	C715	10nF	AnalogIn19		
GEM_In23	R689 100	ESD_Signal23	C719	10nF	AnalogIn23		
GEM_In27	R693 100	ESD_Signal27	C723	10nF	AnalogIn27		
GEM_In31	R697 100	ESD_Signal31	C727	10nF	AnalogIn31		
GEM_In35	R701 100	ESD_Signal35	C731	10nF	AnalogIn35		
GEM_In39	R705 100	ESD_Signal39	C735	10nF	AnalogIn39		
GEM_In43	R709 100	ESD_Signal43	C739	10nF	AnalogIn43		
GEM_In47	R713 100	ESD_Signal47	C743	10nF	AnalogIn47		
GEM_In51	R717 100	ESD_Signal51	C747	10nF	AnalogIn51		
GEM_In55	R721 100	ESD_Signal55	C751	10nF	AnalogIn55		
GEM_In59	R725 100	ESD_Signal59	C755	10nF	AnalogIn59		
GEM_In63	R729 100	ESD_Signal63	C759	10nF	AnalogIn63		

GEM_In4	R670 100	ESD_Signal4	C700	10nF	AnalogIn4		
GEM_In8	R674 100	ESD_Signal8	C704	10nF	AnalogIn8		
GEM_In12	R678 100	ESD_Signal12	C708	10nF	AnalogIn12		
GEM_In16	R682 100	ESD_Signal16	C712	10nF	AnalogIn16		
GEM_In20	R686 100	ESD_Signal20	C716	10nF	AnalogIn20		
GEM_In24	R690 100	ESD_Signal24	C720	10nF	AnalogIn24		
GEM_In28	R694 100	ESD_Signal28	C724	10nF	AnalogIn28		
GEM_In32	R698 100	ESD_Signal32	C728	10nF	AnalogIn32		
GEM_In36	R702 100	ESD_Signal36	C732	10nF	AnalogIn36		
GEM_In40	R706 100	ESD_Signal40	C736	10nF	AnalogIn40		
GEM_In44	R710 100	ESD_Signal44	C740	10nF	AnalogIn44		
GEM_In48	R714 100	ESD_Signal48	C744	10nF	AnalogIn48		
GEM_In52	R718 100	ESD_Signal52	C748	10nF	AnalogIn52		
GEM_In56	R722 100	ESD_Signal56	C752	10nF	AnalogIn56		
GEM_In60	R726 100	ESD_Signal60	C756	10nF	AnalogIn60		
GEM_In64	R730 100	ESD_Signal64	C760	10nF	AnalogIn64		

Title	SDHCal FEB		
Size	Document Number		Rev
Custom	ASIC C1 -- Analog In		V1.0
Date:	Monday, January 22, 2018	Sheet 20 of 48	

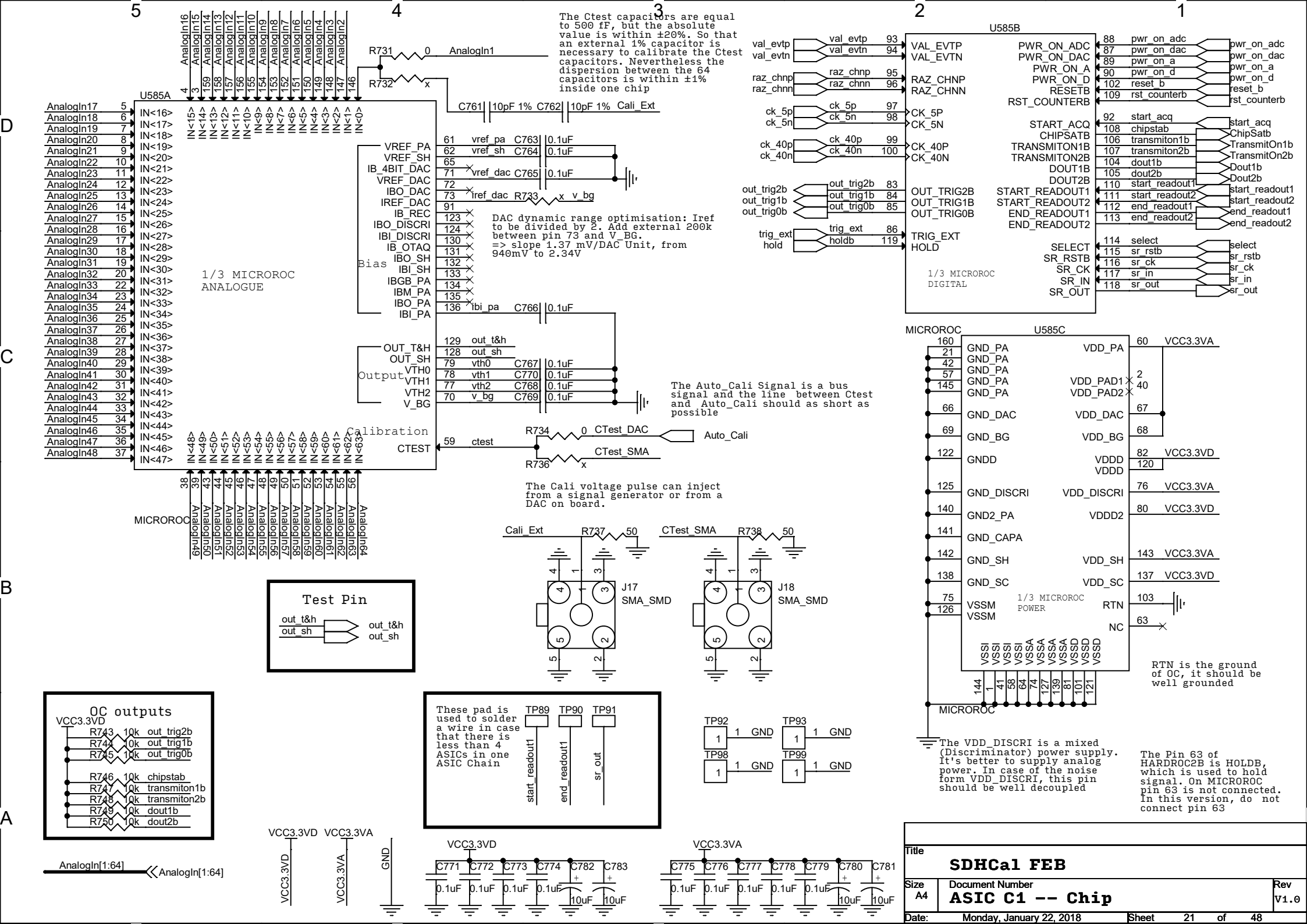
U585A
1/3 MICROROC ANALOGUE
Bias
Output
Calibration
MICROROC
The Ctest capacitors are equal to 500 fF, but the absolute value is within ±20%. So that an external 1% capacitor is necessary to calibrate the Ctest capacitors. Nevertheless the dispersion between the 64 capacitors is within ±1% inside one chip
DAC dynamic range optimisation: Iref to be divided by 2. Add external 200k between pin 73 and V_BG. => slope 1.37 mV/DAC Unit, from 940mV to 2.34V
The Auto_Cali Signal is a bus signal and the line between Ctest and Auto_Cali should as short as possible
The Cali voltage pulse can inject from a signal generator or from a DAC on board.
U585B
1/3 MICROROC DIGITAL
U585C
1/3 MICROROC POWER
Test Pin
OC outputs
These pad is used to solder a wire in case that there is less than 4 ASICs in one ASIC Chain
RTN is the ground of OC, it should be well grounded
The VDD_DISCRI is a mixed (Discriminator) power supply. It's better to supply analog power. In case of the noise form VDD_DISCRI, this pin should be well decoupled
The Pin 63 of HARDROC2B is HOLDB, which is used to hold signal. On MICROROC pin 63 is not connected. In this version, do not connect pin 63
SDHCal FEB
ASIC C1 -- Chip
Monday, January 22, 2018

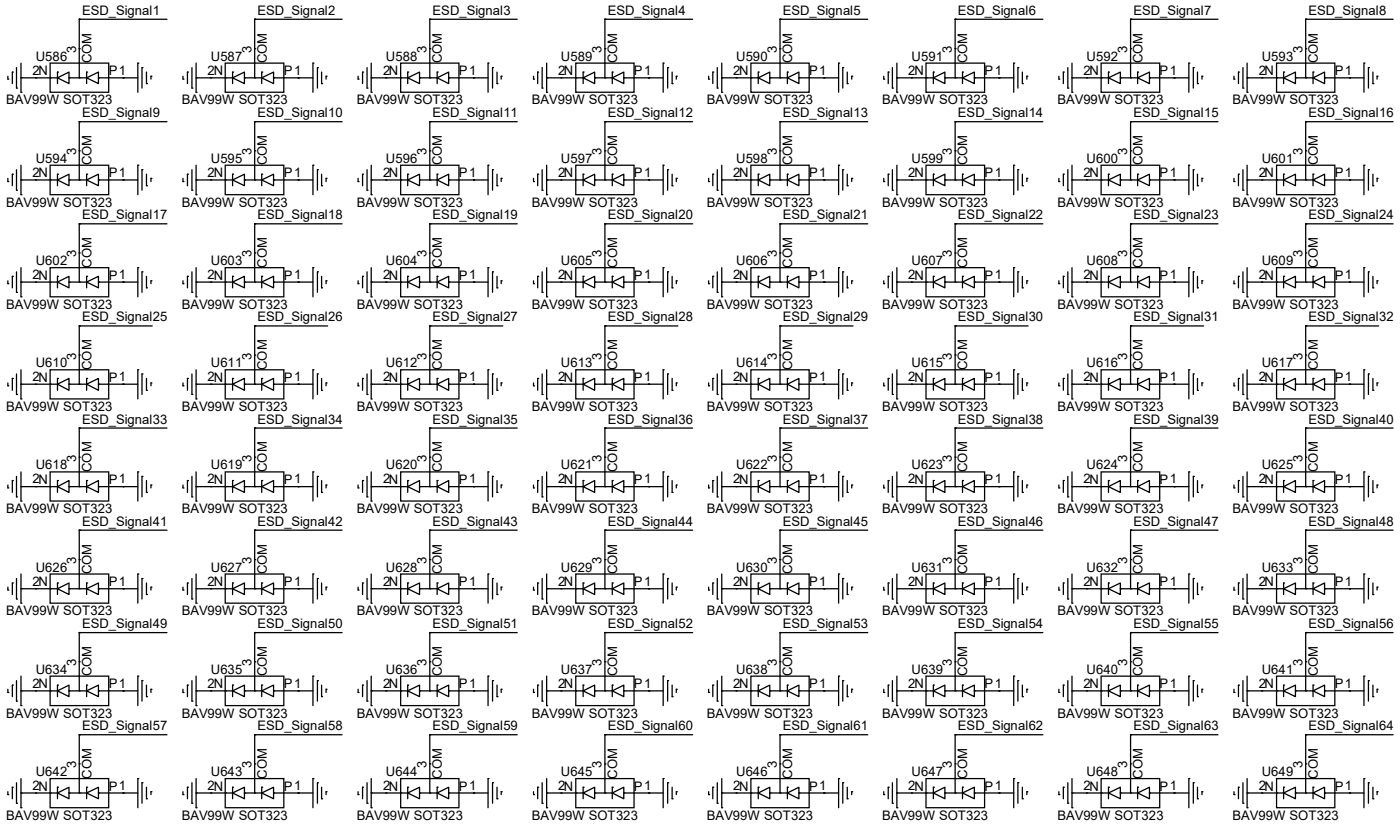

AnalogIn[1:64]

AnalogIn[1:64]

GEM_In[1:64]

GEM_In[1:64]

VCC3.3VA

VCC3.3VA

GND

GEM_In1	R751	100	ESD_Signal1	C784	10nF AnalogIn1	GEM_In2	R752	100	ESD_Signal2	C785	10nF AnalogIn2	GEM_In3	R753	100	ESD_Signal3	C786	10nF AnalogIn3	GEM_In4	R754	100	ESD_Signal4	C787	10nF AnalogIn4
GEM_In5	R755	100	ESD_Signal5	C788	10nF AnalogIn5	GEM_In6	R756	100	ESD_Signal6	C789	10nF AnalogIn6	GEM_In7	R757	100	ESD_Signal7	C790	10nF AnalogIn7	GEM_In8	R758	100	ESD_Signal8	C791	10nF AnalogIn8
GEM_In9	R759	100	ESD_Signal9	C792	10nF AnalogIn9	GEM_In10	R760	100	ESD_Signal10	C793	10nF AnalogIn10	GEM_In11	R761	100	ESD_Signal11	C794	10nF AnalogIn11	GEM_In12	R762	100	ESD_Signal12	C795	10nF AnalogIn12
GEM_In13	R763	100	ESD_Signal13	C796	10nF AnalogIn13	GEM_In14	R764	100	ESD_Signal14	C797	10nF AnalogIn14	GEM_In15	R765	100	ESD_Signal15	C798	10nF AnalogIn15	GEM_In16	R766	100	ESD_Signal16	C799	10nF AnalogIn16
GEM_In17	R767	100	ESD_Signal17	C800	10nF AnalogIn17	GEM_In18	R768	100	ESD_Signal18	C801	10nF AnalogIn18	GEM_In19	R769	100	ESD_Signal19	C802	10nF AnalogIn19	GEM_In20	R770	100	ESD_Signal20	C803	10nF AnalogIn20
GEM_In21	R771	100	ESD_Signal21	C804	10nF AnalogIn21	GEM_In22	R772	100	ESD_Signal22	C805	10nF AnalogIn22	GEM_In23	R773	100	ESD_Signal23	C806	10nF AnalogIn23	GEM_In24	R774	100	ESD_Signal24	C807	10nF AnalogIn24
GEM_In25	R775	100	ESD_Signal25	C808	10nF AnalogIn25	GEM_In26	R776	100	ESD_Signal26	C809	10nF AnalogIn26	GEM_In27	R777	100	ESD_Signal27	C810	10nF AnalogIn27	GEM_In28	R778	100	ESD_Signal28	C811	10nF AnalogIn28
GEM_In29	R779	100	ESD_Signal29	C812	10nF AnalogIn29	GEM_In30	R780	100	ESD_Signal30	C813	10nF AnalogIn30	GEM_In31	R781	100	ESD_Signal31	C814	10nF AnalogIn31	GEM_In32	R782	100	ESD_Signal32	C815	10nF AnalogIn32
GEM_In33	R783	100	ESD_Signal33	C816	10nF AnalogIn33	GEM_In34	R784	100	ESD_Signal34	C817	10nF AnalogIn34	GEM_In35	R785	100	ESD_Signal35	C818	10nF AnalogIn35	GEM_In36	R786	100	ESD_Signal36	C819	10nF AnalogIn36
GEM_In37	R787	100	ESD_Signal37	C820	10nF AnalogIn37	GEM_In38	R788	100	ESD_Signal38	C821	10nF AnalogIn38	GEM_In39	R789	100	ESD_Signal39	C822	10nF AnalogIn39	GEM_In40	R790	100	ESD_Signal40	C823	10nF AnalogIn40
GEM_In41	R791	100	ESD_Signal41	C824	10nF AnalogIn41	GEM_In42	R792	100	ESD_Signal42	C825	10nF AnalogIn42	GEM_In43	R793	100	ESD_Signal43	C826	10nF AnalogIn43	GEM_In44	R794	100	ESD_Signal44	C827	10nF AnalogIn44
GEM_In45	R795	100	ESD_Signal45	C828	10nF AnalogIn45	GEM_In46	R796	100	ESD_Signal46	C829	10nF AnalogIn46	GEM_In47	R797	100	ESD_Signal47	C830	10nF AnalogIn47	GEM_In48	R798	100	ESD_Signal48	C831	10nF AnalogIn48
GEM_In49	R799	100	ESD_Signal49	C832	10nF AnalogIn49	GEM_In50	R800	100	ESD_Signal50	C833	10nF AnalogIn50	GEM_In51	R801	100	ESD_Signal51	C834	10nF AnalogIn51	GEM_In52	R802	100	ESD_Signal52	C835	10nF AnalogIn52
GEM_In53	R803	100	ESD_Signal53	C836	10nF AnalogIn53	GEM_In54	R804	100	ESD_Signal54	C837	10nF AnalogIn54	GEM_In55	R805	100	ESD_Signal55	C838	10nF AnalogIn55	GEM_In56	R806	100	ESD_Signal56	C839	10nF AnalogIn56
GEM_In57	R807	100	ESD_Signal57	C840	10nF AnalogIn57	GEM_In58	R808	100	ESD_Signal58	C841	10nF AnalogIn58	GEM_In59	R809	100	ESD_Signal59	C842	10nF AnalogIn59	GEM_In60	R810	100	ESD_Signal60	C843	10nF AnalogIn60
GEM_In61	R811	100	ESD_Signal61	C844	10nF AnalogIn61	GEM_In62	R812	100	ESD_Signal62	C845	10nF AnalogIn62	GEM_In63	R813	100	ESD_Signal63	C846	10nF AnalogIn63	GEM_In64	R814	100	ESD_Signal64	C847	10nF AnalogIn64

Title	SDHCal FEB	
Size: Custom	Document Number: ASIC C2 -- Analog In	Rev: V1.0
Date: Monday, January 22, 2018	Sheet 22 of 48	

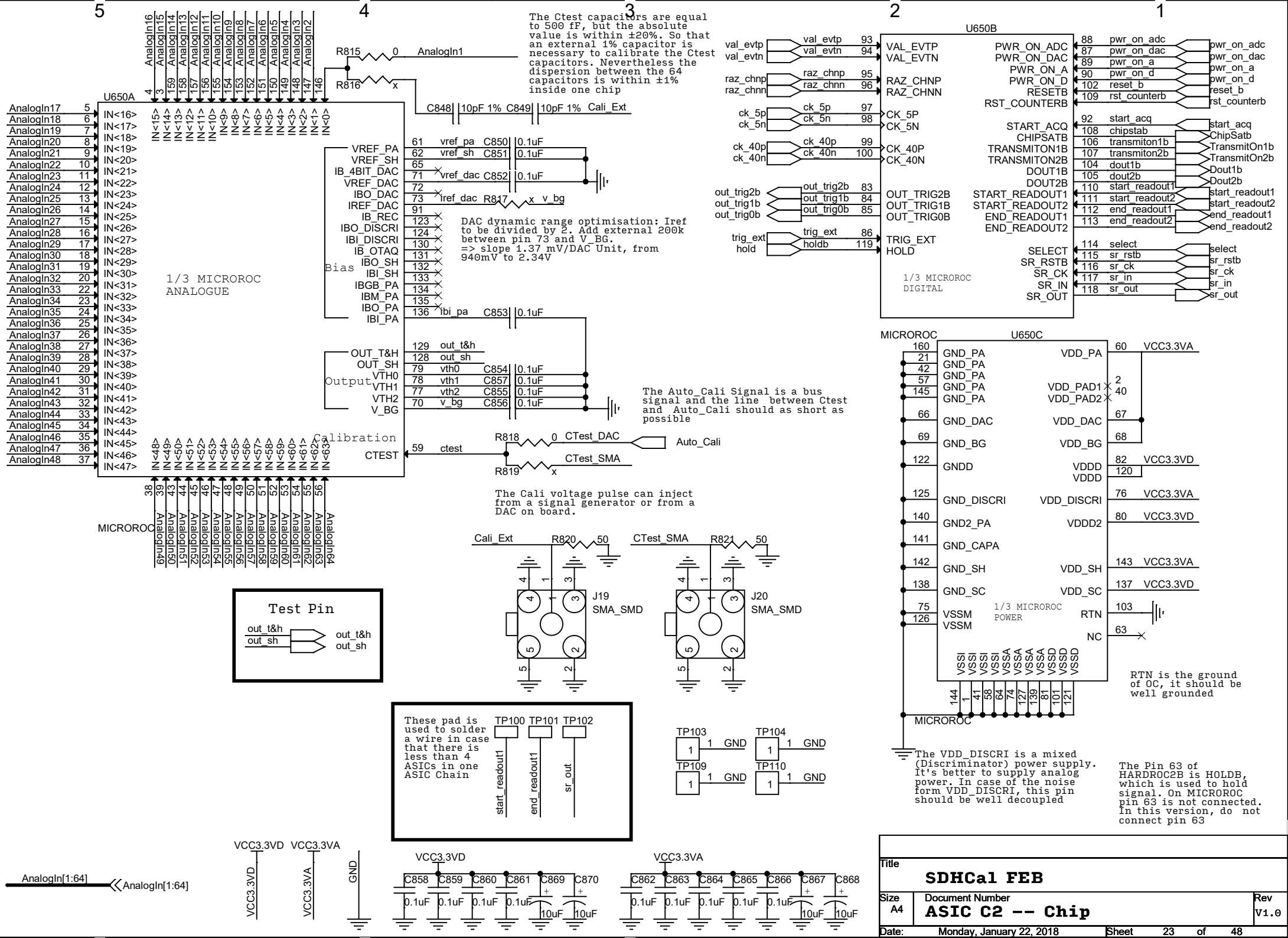
U650A
1/3 MICROROC ANALOGUE
Bias
Output
Calibration
MICROROC
The Ctest capacitors are equal to 500 fF, but the absolute value is within ±20%. So that an external 1% capacitor is necessary to calibrate the Ctest capacitors. Nevertheless the dispersion between the 64 capacitors is within ±1% inside one chip
DAC dynamic range optimisation: Iref to be divided by 2. Add external 200k between pin 73 and V_BG. => slope 1.37 mV/DAC Unit, from 940mV to 2.34V
The Auto_Cali Signal is a bus signal and the line between Ctest and Auto_Cali should as short as possible
The Cali voltage pulse can inject from a signal generator or from a DAC on board.
Test Pin
U650B
1/3 MICROROC DIGITAL
U650C
MICROROC
1/3 MICROROC POWER
RTN is the ground of OC, it should be well grounded
The VDD_DISCRI is a mixed (Discriminator) power supply. It's better to supply analog power. In case of the noise form VDD_DISCRI, this pin should be well decoupled
The Pin 63 of HARDROC2B is HOLDB, which is used to hold signal. On MICROROC pin 63 is not connected. In this version, do not connect pin 63
These pad is used to solder a wire in case that there is less than 4 ASICs in one ASIC Chain
J19 SMA_SMD
J20 SMA_SMD
AnalogIn[1:64]
SDHCal FEB
ASIC C2 -- Chip
Monday, January 22, 2018

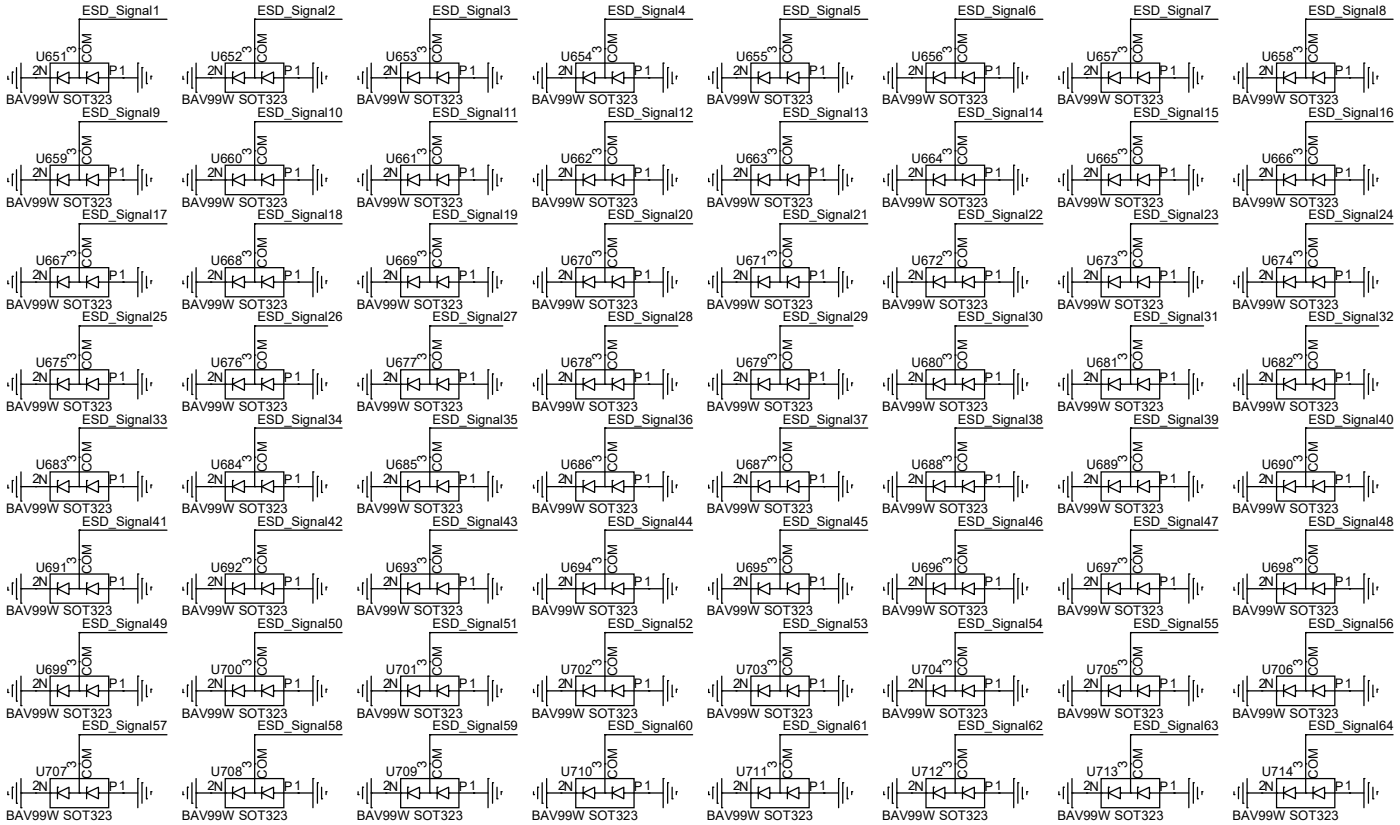

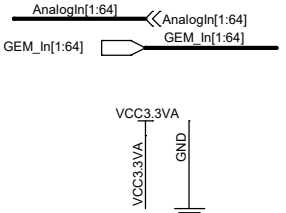

GEM_In1	R834	100	ESD_Signal1	C871	10nF AnalogIn1	GEM_In2	R835	100	ESD_Signal2	C872	10nF AnalogIn2
GEM_In5	R838	100	ESD_Signal5	C875	10nF AnalogIn5	GEM_In6	R839	100	ESD_Signal6	C876	10nF AnalogIn6
GEM_In9	R842	100	ESD_Signal9	C879	10nF AnalogIn9	GEM_In10	R843	100	ESD_Signal10	C880	10nF AnalogIn10
GEM_In13	R846	100	ESD_Signal13	C883	10nF AnalogIn13	GEM_In14	R847	100	ESD_Signal14	C884	10nF AnalogIn14
GEM_In17	R850	100	ESD_Signal17	C887	10nF AnalogIn17	GEM_In18	R851	100	ESD_Signal18	C888	10nF AnalogIn18
GEM_In21	R854	100	ESD_Signal21	C891	10nF AnalogIn21	GEM_In22	R855	100	ESD_Signal22	C892	10nF AnalogIn22
GEM_In25	R858	100	ESD_Signal25	C895	10nF AnalogIn25	GEM_In26	R859	100	ESD_Signal26	C896	10nF AnalogIn26
GEM_In29	R862	100	ESD_Signal29	C899	10nF AnalogIn29	GEM_In30	R863	100	ESD_Signal30	C900	10nF AnalogIn30
GEM_In33	R866	100	ESD_Signal33	C903	10nF AnalogIn33	GEM_In34	R867	100	ESD_Signal34	C904	10nF AnalogIn34
GEM_In37	R870	100	ESD_Signal37	C907	10nF AnalogIn37	GEM_In38	R871	100	ESD_Signal38	C908	10nF AnalogIn38
GEM_In41	R874	100	ESD_Signal41	C911	10nF AnalogIn41	GEM_In42	R875	100	ESD_Signal42	C912	10nF AnalogIn42
GEM_In45	R878	100	ESD_Signal45	C915	10nF AnalogIn45	GEM_In46	R879	100	ESD_Signal46	C916	10nF AnalogIn46
GEM_In49	R882	100	ESD_Signal49	C919	10nF AnalogIn49	GEM_In50	R883	100	ESD_Signal50	C920	10nF AnalogIn50
GEM_In53	R886	100	ESD_Signal53	C923	10nF AnalogIn53	GEM_In54	R887	100	ESD_Signal54	C924	10nF AnalogIn54
GEM_In57	R890	100	ESD_Signal57	C927	10nF AnalogIn57	GEM_In58	R891	100	ESD_Signal58	C928	10nF AnalogIn58
GEM_In61	R894	100	ESD_Signal61	C931	10nF AnalogIn61	GEM_In62	R895	100	ESD_Signal62	C932	10nF AnalogIn62

GEM_In3	R836	100	ESD_Signal3	C873	10nF AnalogIn3	GEM_In4	R837	100	ESD_Signal4	C874	10nF AnalogIn4
GEM_In7	R840	100	ESD_Signal7	C877	10nF AnalogIn7	GEM_In8	R841	100	ESD_Signal8	C878	10nF AnalogIn8
GEM_In11	R844	100	ESD_Signal11	C881	10nF AnalogIn11	GEM_In12	R845	100	ESD_Signal12	C882	10nF AnalogIn12
GEM_In15	R848	100	ESD_Signal15	C885	10nF AnalogIn15	GEM_In16	R849	100	ESD_Signal16	C886	10nF AnalogIn16
GEM_In19	R852	100	ESD_Signal19	C889	10nF AnalogIn19	GEM_In20	R853	100	ESD_Signal20	C890	10nF AnalogIn20
GEM_In23	R856	100	ESD_Signal23	C893	10nF AnalogIn23	GEM_In24	R857	100	ESD_Signal24	C894	10nF AnalogIn24
GEM_In27	R860	100	ESD_Signal27	C897	10nF AnalogIn27	GEM_In28	R861	100	ESD_Signal28	C898	10nF AnalogIn28
GEM_In31	R864	100	ESD_Signal31	C901	10nF AnalogIn31	GEM_In32	R865	100	ESD_Signal32	C902	10nF AnalogIn32
GEM_In35	R868	100	ESD_Signal35	C905	10nF AnalogIn35	GEM_In36	R869	100	ESD_Signal36	C906	10nF AnalogIn36
GEM_In39	R872	100	ESD_Signal39	C909	10nF AnalogIn39	GEM_In40	R873	100	ESD_Signal40	C910	10nF AnalogIn40
GEM_In43	R876	100	ESD_Signal43	C913	10nF AnalogIn43	GEM_In44	R877	100	ESD_Signal44	C914	10nF AnalogIn44
GEM_In47	R880	100	ESD_Signal47	C917	10nF AnalogIn47	GEM_In48	R881	100	ESD_Signal48	C918	10nF AnalogIn48
GEM_In51	R884	100	ESD_Signal51	C921	10nF AnalogIn51	GEM_In52	R885	100	ESD_Signal52	C922	10nF AnalogIn52
GEM_In55	R888	100	ESD_Signal55	C925	10nF AnalogIn55	GEM_In56	R889	100	ESD_Signal56	C926	10nF AnalogIn56
GEM_In59	R892	100	ESD_Signal59	C929	10nF AnalogIn59	GEM_In60	R893	100	ESD_Signal60	C930	10nF AnalogIn60
GEM_In63	R896	100	ESD_Signal63	C933	10nF AnalogIn63	GEM_In64	R897	100	ESD_Signal64	C934	10nF AnalogIn64

Title	SDHCal FEB	
Size: Custom	Document Number: ASIC C3 -- Analog In	Rev: V1.0
Date: Monday, January 22, 2018	Sheet 24 of 48	

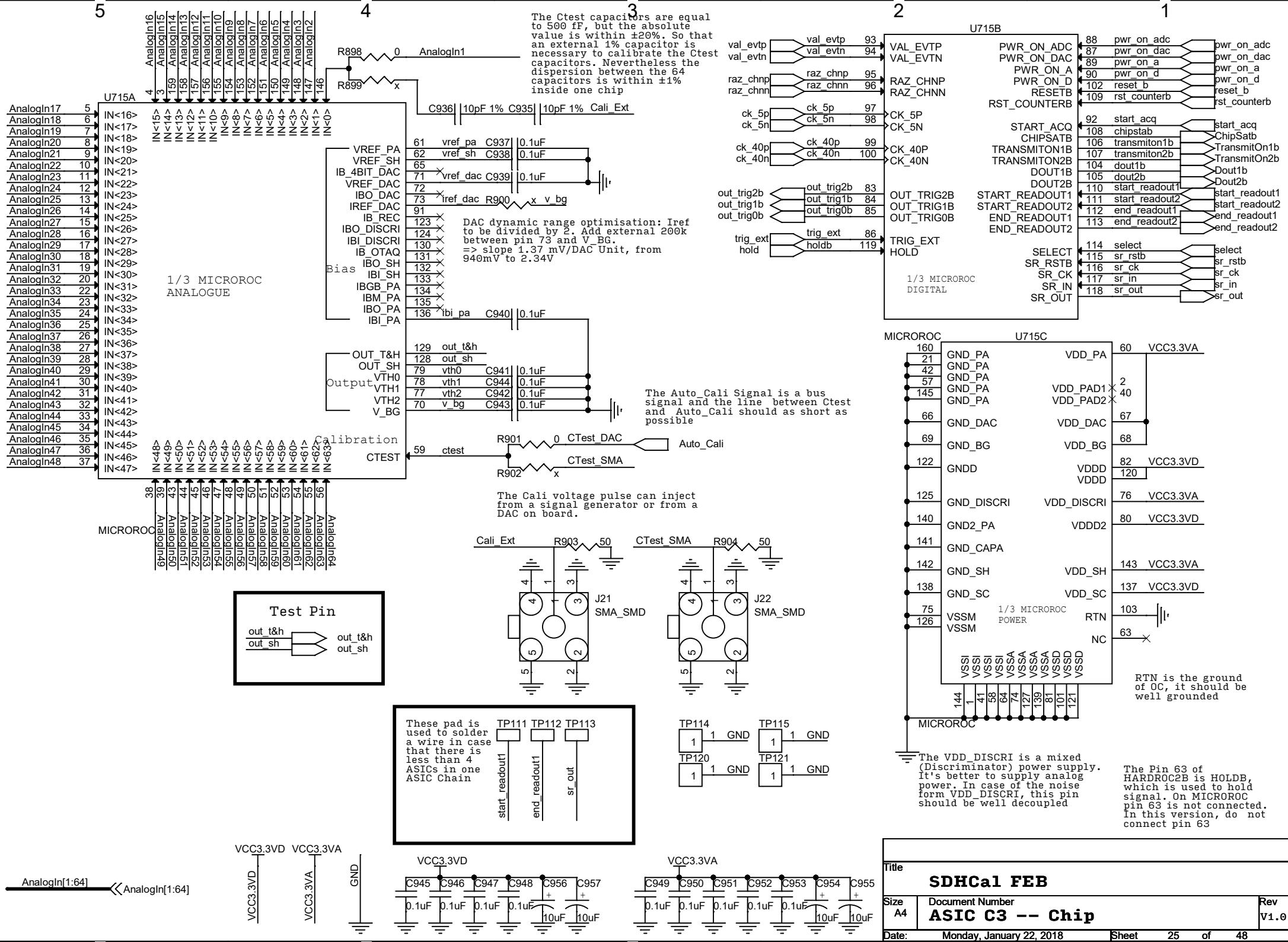
U715A
1/3 MICROROC ANALOGUE
Bias
Output
Calibration
MICROROC
U715B
1/3 MICROROC DIGITAL
U715C
1/3 MICROROC POWER
The Ctest capacitors are equal to 500 fF, but the absolute value is within ±20%. So that an external 1% capacitor is necessary to calibrate the Ctest capacitors. Nevertheless the dispersion between the 64 capacitors is within ±1% inside one chip
DAC dynamic range optimisation: Iref to be divided by 2. Add external 200k between pin 73 and V_BG. => slope 1.37 mV/DAC Unit, from 940mV to 2.34V
The Auto_Cali Signal is a bus signal and the line between Ctest and Auto_Cali should as short as possible
The Cali voltage pulse can inject from a signal generator or from a DAC on board.
Test Pin
These pad is used to solder a wire in case that there is less than 4 ASICs in one ASIC Chain
RTN is the ground of OC, it should be well grounded
The VDD_DISCRI is a mixed (Discriminator) power supply. It's better to supply analog power. In case of the noise form VDD_DISCRI, this pin should be well decoupled
The Pin 63 of HARDROC2B is HOLDB, which is used to hold signal. On MICROROC pin 63 is not connected. In this version, do not connect pin 63
SDHCal FEB
ASIC C3 -- Chip
Monday, January 22, 2018

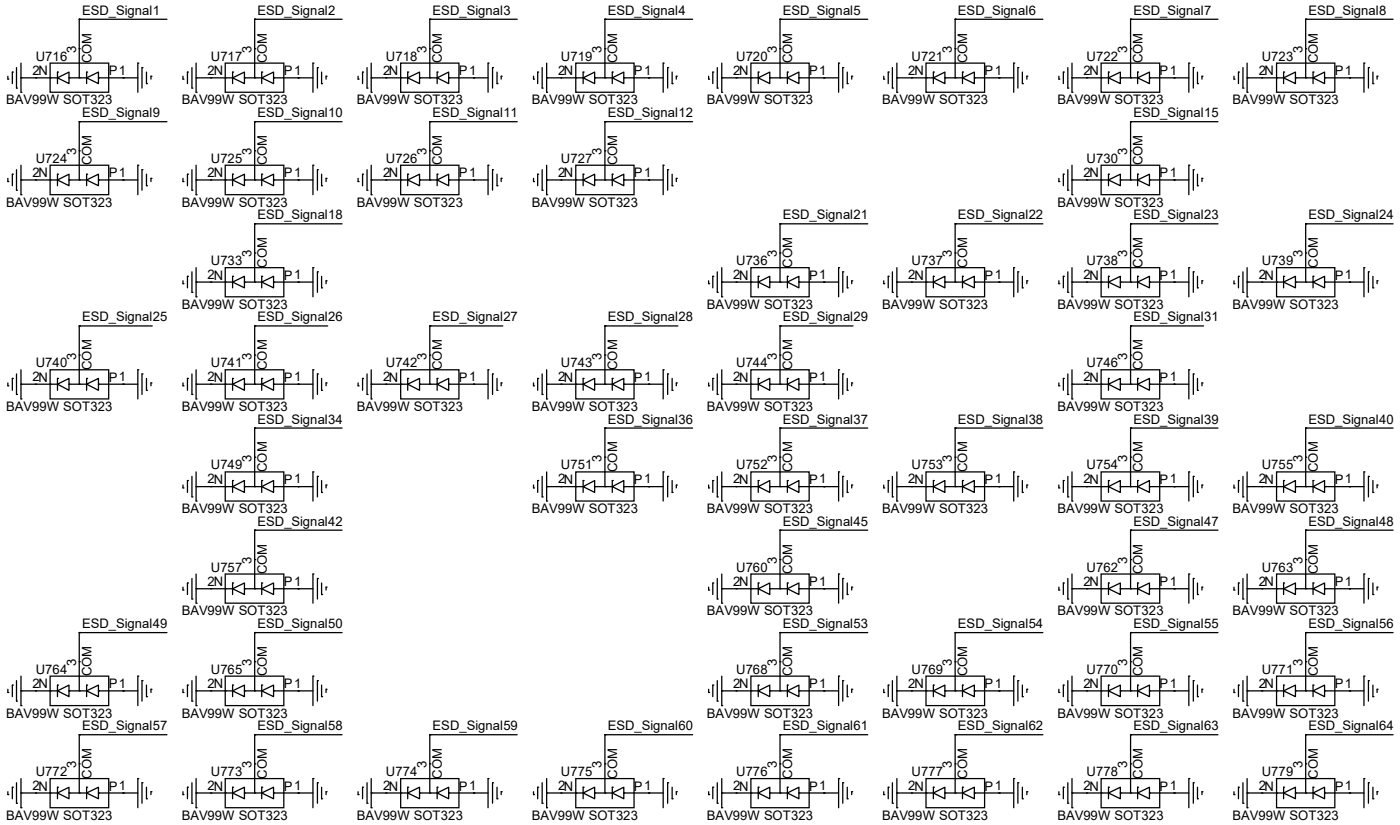

AnalogIn[1:64]
AnalogIn[1:64]
GEM_In[1:64]
GEM_In[1:64]

VCC3.3VA
VCC3.3VA
GND

GEM_In1	R917 100	ESD_Signal1	C958	10nF	AnalogIn1		
GEM_In5	R921 100	ESD_Signal5	C962	10nF	AnalogIn5		
GEM_In9	R925 100	ESD_Signal9	C966	10nF	AnalogIn9		
GEM_In13					AnalogIn13		
GEM_In17					AnalogIn17		
GEM_In21	R937 100	ESD_Signal21	C978	10nF	AnalogIn21		
GEM_In25	R941 100	ESD_Signal25	C982	10nF	AnalogIn25		
GEM_In29	R945 100	ESD_Signal29	C986	10nF	AnalogIn29		
GEM_In33					AnalogIn33		
GEM_In37	R953 100	ESD_Signal37	C994	10nF	AnalogIn37		
GEM_In41					AnalogIn41		
GEM_In45	R961 100	ESD_Signal45	C1002	10nF	AnalogIn45		
GEM_In49	R965 100	ESD_Signal49	C1006	10nF	AnalogIn49		
GEM_In53	R969 100	ESD_Signal53	C1010	10nF	AnalogIn53		
GEM_In57	R973 100	ESD_Signal57	C1014	10nF	AnalogIn57		
GEM_In61	R977 100	ESD_Signal61	C1018	10nF	AnalogIn61		

GEM_In2	R918 100	ESD_Signal2	C959	10nF	AnalogIn2		
GEM_In6	R922 100	ESD_Signal6	C963	10nF	AnalogIn6		
GEM_In10	R926 100	ESD_Signal10	C967	10nF	AnalogIn10		
GEM_In14					AnalogIn14		
GEM_In18	R934 100	ESD_Signal18	C975	10nF	AnalogIn18		
GEM_In22	R938 100	ESD_Signal22	C979	10nF	AnalogIn22		
GEM_In26	R942 100	ESD_Signal26	C983	10nF	AnalogIn26		
GEM_In30					AnalogIn30		
GEM_In34	R950 100	ESD_Signal34	C991	10nF	AnalogIn34		
GEM_In38	R954 100	ESD_Signal38	C995	10nF	AnalogIn38		
GEM_In42	R958 100	ESD_Signal42	C999	10nF	AnalogIn42		
GEM_In46					AnalogIn46		
GEM_In50	R966 100	ESD_Signal50	C1007	10nF	AnalogIn50		
GEM_In54	R970 100	ESD_Signal54	C1011	10nF	AnalogIn54		
GEM_In58	R974 100	ESD_Signal58	C1015	10nF	AnalogIn58		
GEM_In62	R978 100	ESD_Signal62	C1019	10nF	AnalogIn62		

GEM_In3	R919 100	ESD_Signal3	C960	10nF	AnalogIn3		
GEM_In7	R923 100	ESD_Signal7	C964	10nF	AnalogIn7		
GEM_In11	R927 100	ESD_Signal11	C968	10nF	AnalogIn11		
GEM_In15	R931 100	ESD_Signal15	C972	10nF	AnalogIn15		
GEM_In19					AnalogIn19		
GEM_In23	R939 100	ESD_Signal23	C980	10nF	AnalogIn23		
GEM_In27	R943 100	ESD_Signal27	C984	10nF	AnalogIn27		
GEM_In31	R947 100	ESD_Signal31	C988	10nF	AnalogIn31		
GEM_In35					AnalogIn35		
GEM_In39	R955 100	ESD_Signal39	C996	10nF	AnalogIn39		
GEM_In43					AnalogIn43		
GEM_In47	R963 100	ESD_Signal47	C1004	10nF	AnalogIn47		
GEM_In51					AnalogIn51		
GEM_In55	R971 100	ESD_Signal55	C1012	10nF	AnalogIn55		
GEM_In59	R975 100	ESD_Signal59	C1016	10nF	AnalogIn59		
GEM_In63	R979 100	ESD_Signal63	C1020	10nF	AnalogIn63		

GEM_In4	R920 100	ESD_Signal4	C961	10nF	AnalogIn4		
GEM_In8	R924 100	ESD_Signal8	C965	10nF	AnalogIn8		
GEM_In12	R928 100	ESD_Signal12	C969	10nF	AnalogIn12		
GEM_In16					AnalogIn16		
GEM_In20					AnalogIn20		
GEM_In24	R940 100	ESD_Signal24	C981	10nF	AnalogIn24		
GEM_In28	R944 100	ESD_Signal28	C985	10nF	AnalogIn28		
GEM_In32					AnalogIn32		
GEM_In36	R952 100	ESD_Signal36	C993	10nF	AnalogIn36		
GEM_In40	R956 100	ESD_Signal40	C997	10nF	AnalogIn40		
GEM_In44					AnalogIn44		
GEM_In48	R964 100	ESD_Signal48	C1005	10nF	AnalogIn48		
GEM_In52					AnalogIn52		
GEM_In56	R972 100	ESD_Signal56	C1013	10nF	AnalogIn56		
GEM_In60	R976 100	ESD_Signal60	C1017	10nF	AnalogIn60		
GEM_In64	R980 100	ESD_Signal64	C1021	10nF	AnalogIn64		

Title	SDHCal FEB		
Size: Custom	Document Number: ASIC C4 -- Analog In		Rev: V1.0
Date: Monday, January 22, 2018	Sheet 26 of 48		

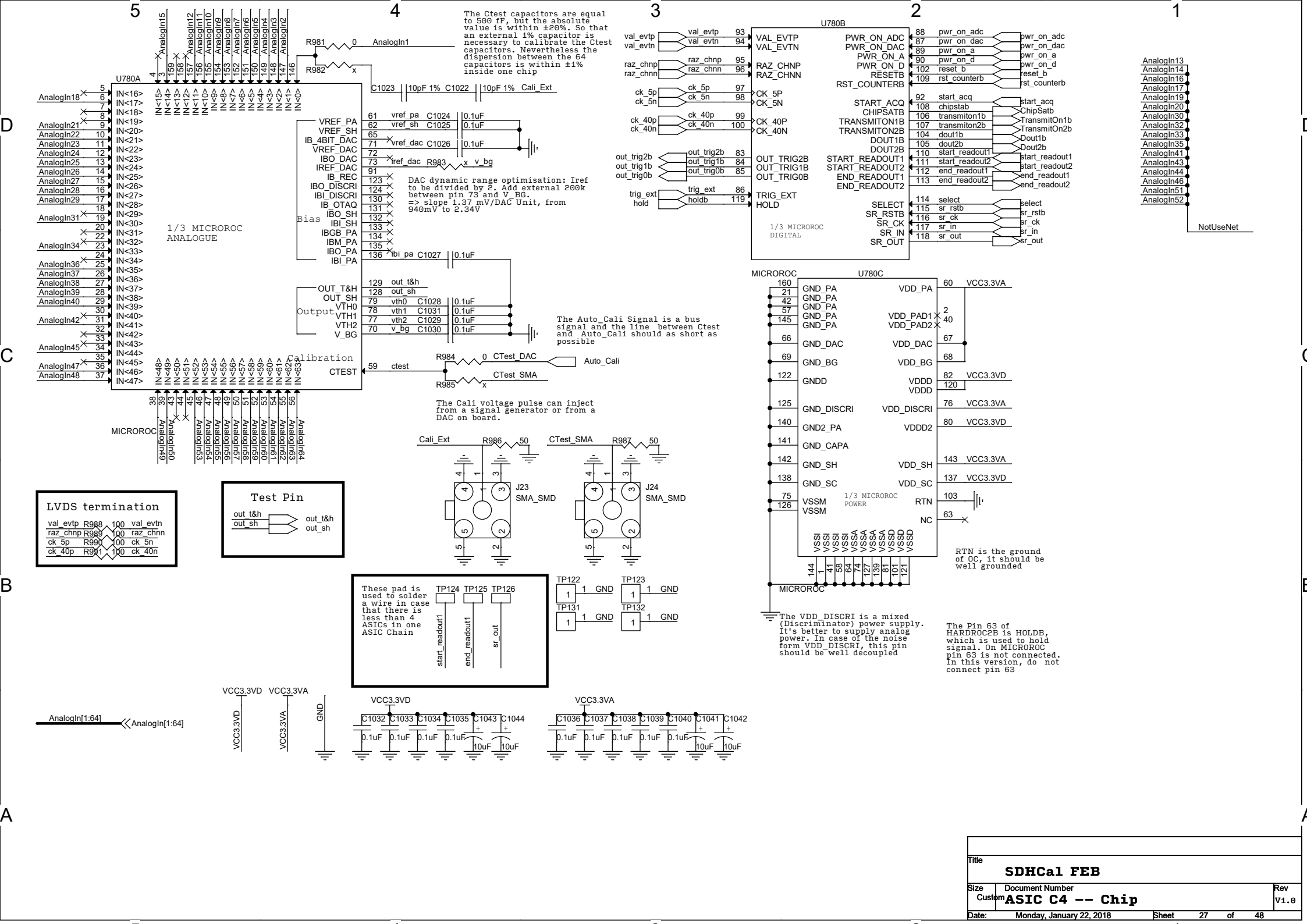

Title	SDHCal FEB		
Size: Custom	Document Number: ASIC C4 -- Chip		Rev: V1.0
Date: Monday, January 22, 2018	Sheet 27 of 48		

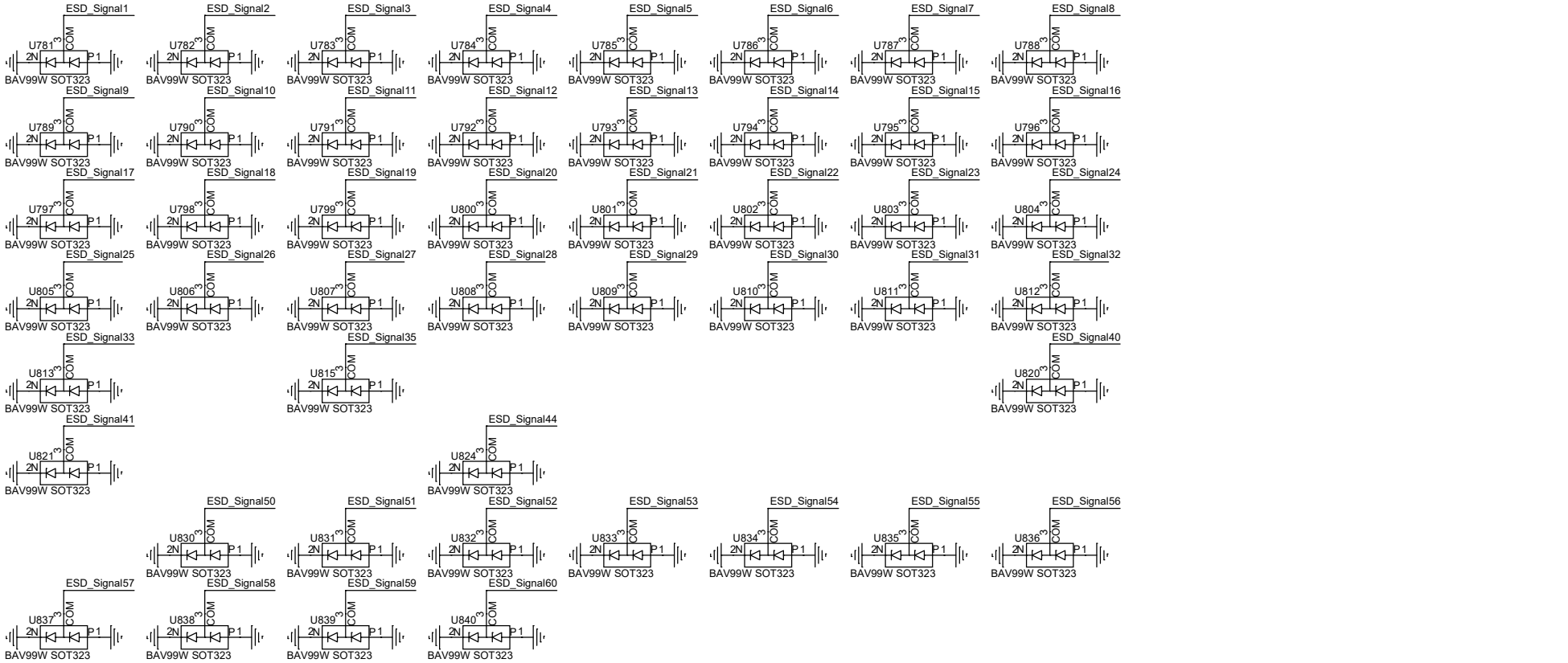

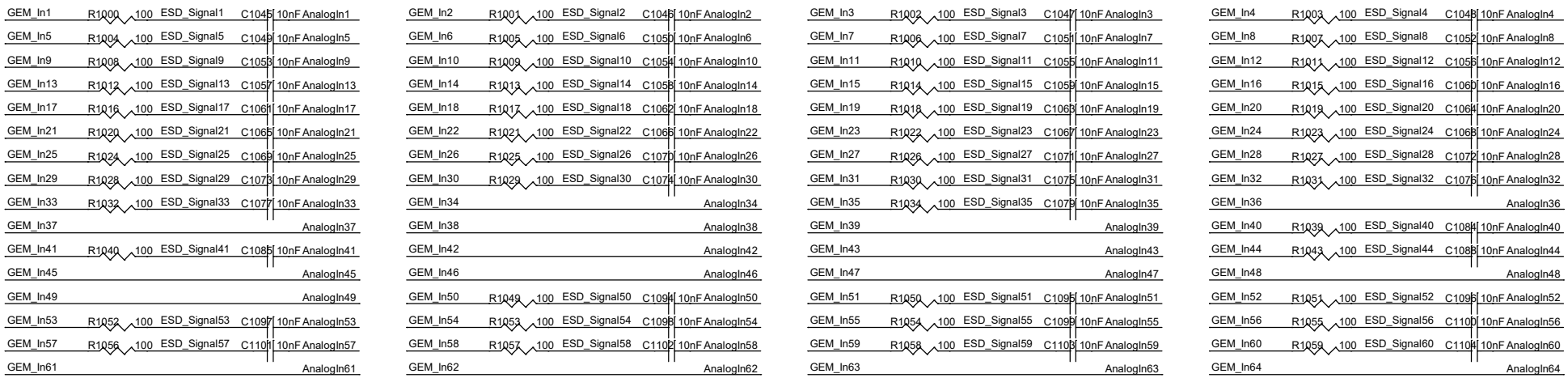

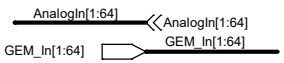

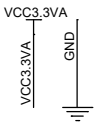

Title	SDHCal FEB	
Size: Custom	Document Number: ASIC D1 -- Analog In	Rev: V1.0
Date: Monday, January 22, 2018	Sheet 28 of 48	

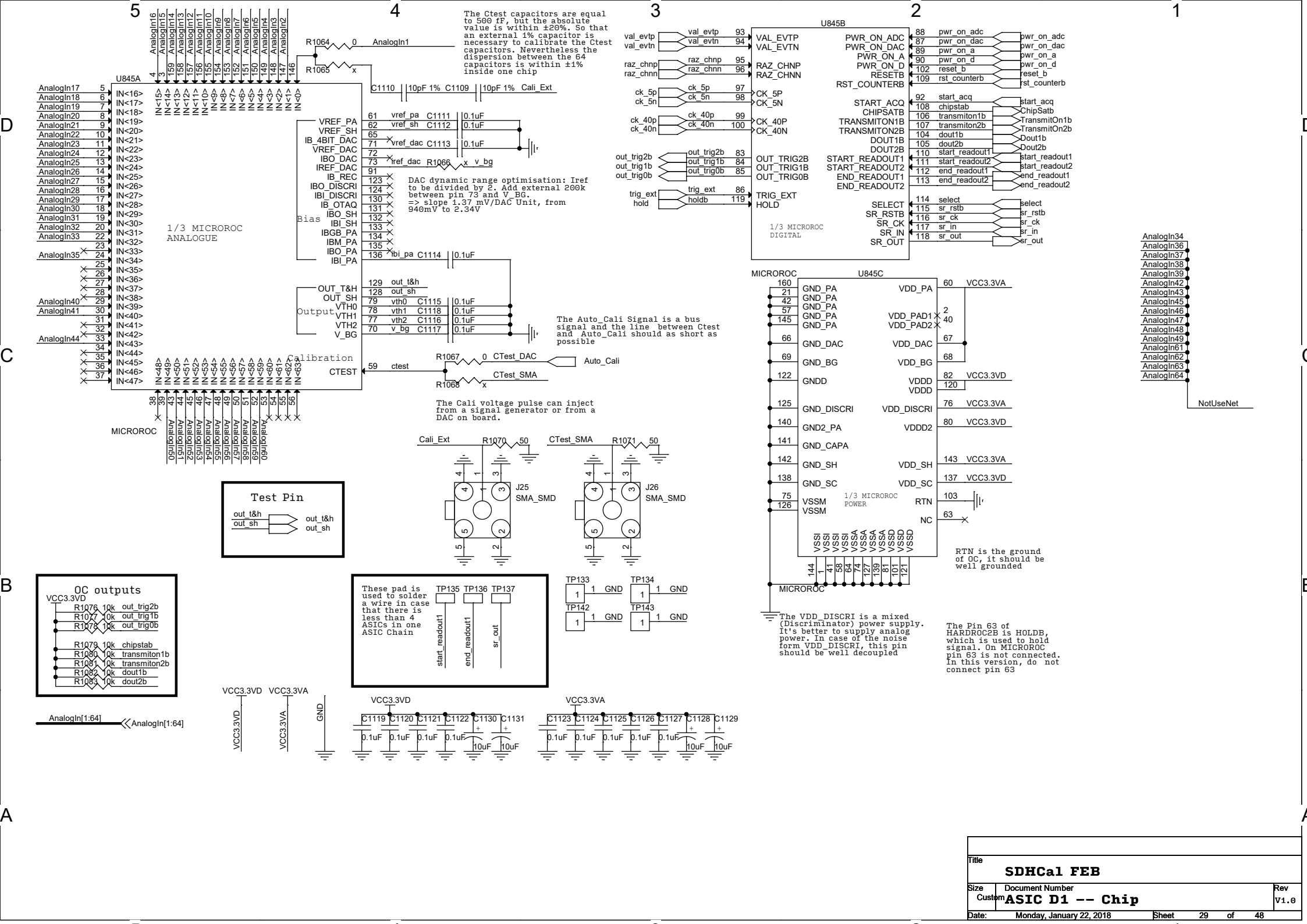
The Ctest capacitors are equal to 500 fF, but the absolute value is within ±20%. So that an external 1% capacitor is necessary to calibrate the Ctest capacitors. Nevertheless the dispersion between the 64 capacitors is within ±1% inside one chip
U845A
1/3 MICROROC ANALOGUE
DAC dynamic range optimisation: Iref to be divided by 2. Add external 200k between pin 73 and V_BG. => slope 1.37 mV/DAC Unit, from 940mV to 2.34V
The Auto_Cali Signal is a bus signal and the line between Ctest and Auto_Cali should as short as possible
The Cali voltage pulse can inject from a signal generator or from a DAC on board.
MICROROC
U845B
1/3 MICROROC DIGITAL
U845C
1/3 MICROROC POWER
RTN is the ground of OC, it should be well grounded
The VDD_DISCRI is a mixed (Discriminator) power supply. It's better to supply analog power. In case of the noise form VDD_DISCRI, this pin should be well decoupled
The Pin 63 of HARDROC2B is HOLDB, which is used to hold signal. On MICROROC pin 63 is not connected. In this version, do not connect pin 63
Test Pin
OC outputs
These pad is used to solder a wire in case that there is less than 4 ASICs in one ASIC Chain
NotUseNet
Title
SDHCal FEB
Size
Custom
Document Number
ASIC D1 -- Chip
Rev
V1.0
Date:
Monday, January 22, 2018
Sheet
29
of
48

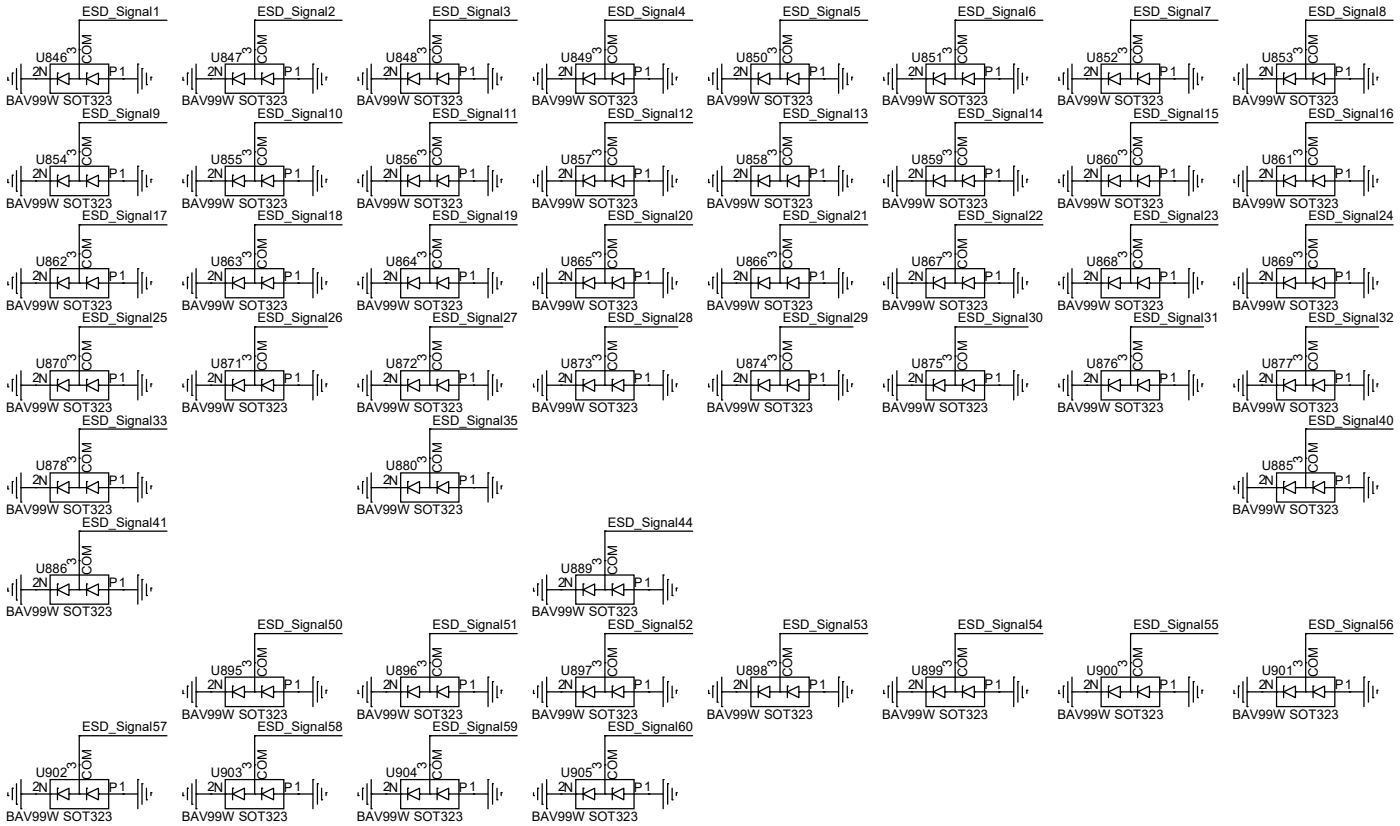

AnalogIn[1:64]
GEM_In[1:64]
AnalogIn[1:64]
GEM_In[1:64]

VCC3.3VA
VCC3.3VA
GND

GEM_In1 R1084 100 ESD_Signal1 C1132 10nF AnalogIn1
GEM_In5 R1088 100 ESD_Signal5 C1136 10nF AnalogIn5
GEM_In9 R1092 100 ESD_Signal9 C1140 10nF AnalogIn9
GEM_In13 R1096 100 ESD_Signal13 C1144 10nF AnalogIn13
GEM_In17 R1100 100 ESD_Signal17 C1148 10nF AnalogIn17
GEM_In21 R1104 100 ESD_Signal21 C1152 10nF AnalogIn21
GEM_In25 R1108 100 ESD_Signal25 C1156 10nF AnalogIn25
GEM_In29 R1112 100 ESD_Signal29 C1160 10nF AnalogIn29
GEM_In33 R1116 100 ESD_Signal33 C1164 10nF AnalogIn33
GEM_In37 AnalogIn37
GEM_In41 R1124 100 ESD_Signal41 C1172 10nF AnalogIn41
GEM_In45 AnalogIn45
GEM_In49 AnalogIn49
GEM_In53 R1136 100 ESD_Signal53 C1184 10nF AnalogIn53
GEM_In57 R1140 100 ESD_Signal57 C1188 10nF AnalogIn57
GEM_In61 AnalogIn61

GEM_In2 R1085 100 ESD_Signal2 C1133 10nF AnalogIn2
GEM_In6 R1089 100 ESD_Signal6 C1137 10nF AnalogIn6
GEM_In10 R1093 100 ESD_Signal10 C1141 10nF AnalogIn10
GEM_In14 R1097 100 ESD_Signal14 C1145 10nF AnalogIn14
GEM_In18 R1101 100 ESD_Signal18 C1149 10nF AnalogIn18
GEM_In22 R1105 100 ESD_Signal22 C1153 10nF AnalogIn22
GEM_In26 R1109 100 ESD_Signal26 C1157 10nF AnalogIn26
GEM_In30 R1113 100 ESD_Signal30 C1161 10nF AnalogIn30
GEM_In34 AnalogIn34
GEM_In38 AnalogIn38
GEM_In42 AnalogIn42
GEM_In46 AnalogIn46
GEM_In50 R1133 100 ESD_Signal50 C1181 10nF AnalogIn50
GEM_In54 R1137 100 ESD_Signal54 C1185 10nF AnalogIn54
GEM_In58 R1141 100 ESD_Signal58 C1189 10nF AnalogIn58
GEM_In62 AnalogIn62

GEM_In3 R1086 100 ESD_Signal3 C1134 10nF AnalogIn3
GEM_In7 R1090 100 ESD_Signal7 C1138 10nF AnalogIn7
GEM_In11 R1094 100 ESD_Signal11 C1142 10nF AnalogIn11
GEM_In15 R1098 100 ESD_Signal15 C1146 10nF AnalogIn15
GEM_In19 R1102 100 ESD_Signal19 C1150 10nF AnalogIn19
GEM_In23 R1106 100 ESD_Signal23 C1154 10nF AnalogIn23
GEM_In27 R1110 100 ESD_Signal27 C1158 10nF AnalogIn27
GEM_In31 R1114 100 ESD_Signal31 C1162 10nF AnalogIn31
GEM_In35 R1118 100 ESD_Signal35 C1166 10nF AnalogIn35
GEM_In39 AnalogIn39
GEM_In43 AnalogIn43
GEM_In47 AnalogIn47
GEM_In51 R1134 100 ESD_Signal51 C1182 10nF AnalogIn51
GEM_In55 R1138 100 ESD_Signal55 C1186 10nF AnalogIn55
GEM_In59 R1142 100 ESD_Signal59 C1190 10nF AnalogIn59
GEM_In63 AnalogIn63

GEM_In4 R1087 100 ESD_Signal4 C1135 10nF AnalogIn4
GEM_In8 R1091 100 ESD_Signal8 C1139 10nF AnalogIn8
GEM_In12 R1095 100 ESD_Signal12 C1143 10nF AnalogIn12
GEM_In16 R1099 100 ESD_Signal16 C1147 10nF AnalogIn16
GEM_In20 R1103 100 ESD_Signal20 C1151 10nF AnalogIn20
GEM_In24 R1107 100 ESD_Signal24 C1155 10nF AnalogIn24
GEM_In28 R1111 100 ESD_Signal28 C1159 10nF AnalogIn28
GEM_In32 R1115 100 ESD_Signal32 C1163 10nF AnalogIn32
GEM_In36 AnalogIn36
GEM_In40 R1123 100 ESD_Signal40 C1171 10nF AnalogIn40
GEM_In44 R1127 100 ESD_Signal44 C1175 10nF AnalogIn44
GEM_In48 AnalogIn48
GEM_In52 R1135 100 ESD_Signal52 C1183 10nF AnalogIn52
GEM_In56 R1139 100 ESD_Signal56 C1187 10nF AnalogIn56
GEM_In60 R1143 100 ESD_Signal60 C1191 10nF AnalogIn60
GEM_In64 AnalogIn64

Title	SDHCal FEB	
Size: Custom	Document Number: ASIC D2 -- Analog In	Rev: V1.0
Date: Monday, January 22, 2018	Sheet 30 of 48	

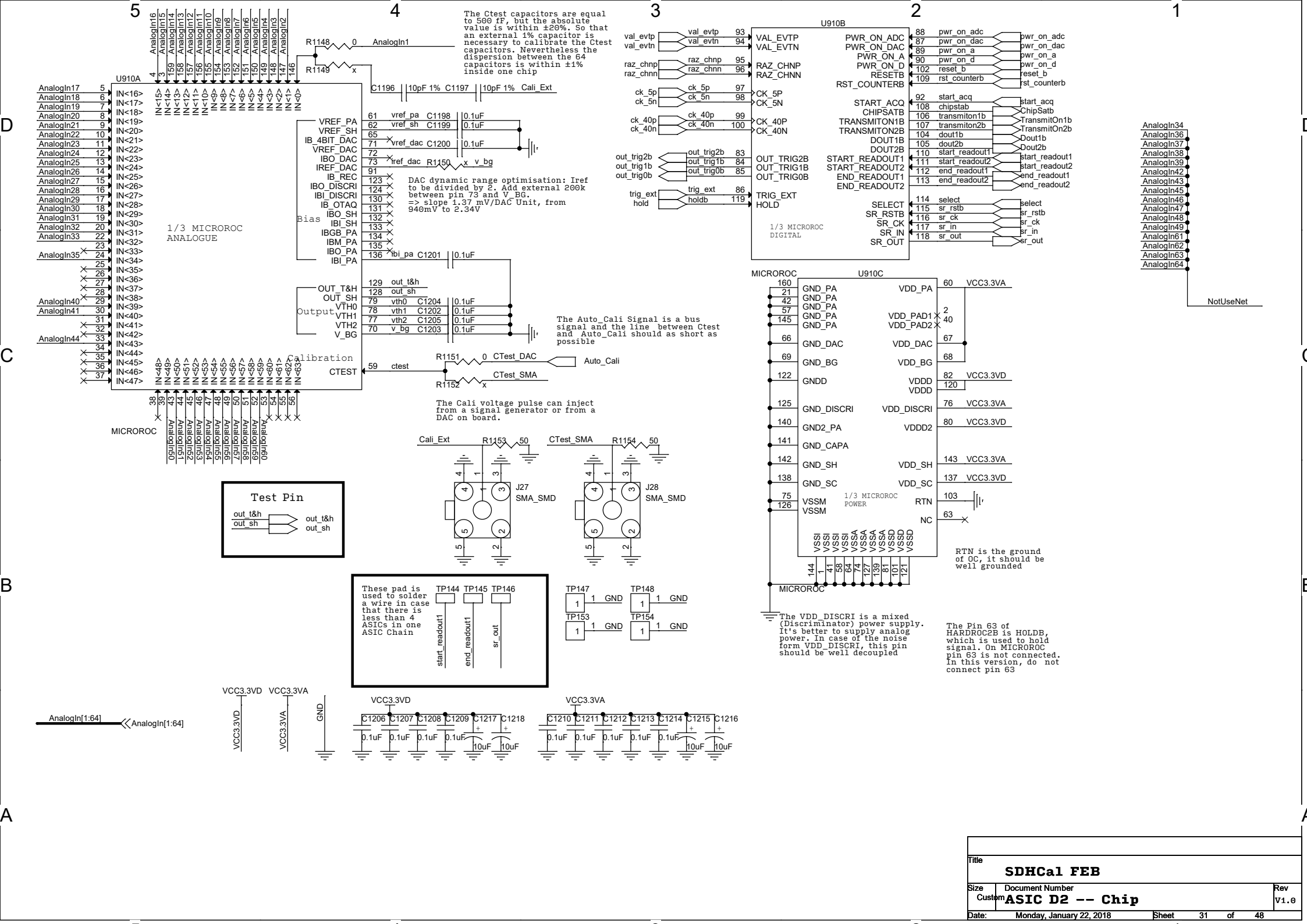
U910A
1/3 MICROROC ANALOGUE
MICROROC
U910B
1/3 MICROROC DIGITAL
U910C
1/3 MICROROC POWER
The Ctest capacitors are equal to 500 fF, but the absolute value is within ±20%. So that an external 1% capacitor is necessary to calibrate the Ctest capacitors. Nevertheless the dispersion between the 64 capacitors is within ±1% inside one chip
DAC dynamic range optimisation: Iref to be divided by 2. Add external 200k between pin 73 and V_BG. => slope 1.37 mV/DAC Unit, from 940mV to 2.34V
The Auto_Cali Signal is a bus signal and the line between Ctest and Auto_Cali should as short as possible
The Cali voltage pulse can inject from a signal generator or from a DAC on board.
Test Pin
These pad is used to solder a wire in case that there is less than 4 ASICs in one ASIC Chain
RTN is the ground of OC, it should be well grounded
The VDD_DISCRI is a mixed (Discriminator) power supply. It's better to supply analog power. In case of the noise form VDD_DISCRI, this pin should be well decoupled
The Pin 63 of HARDROC2B is HOLDB, which is used to hold signal. On MICROROC pin 63 is not connected. In this version, do not connect pin 63
NotUseNet
Title
SDHCal FEB
Size Custom
Document Number
ASIC D2 -- Chip
Rev V1.0
Date: Monday, January 22, 2018
Sheet 31 of 48

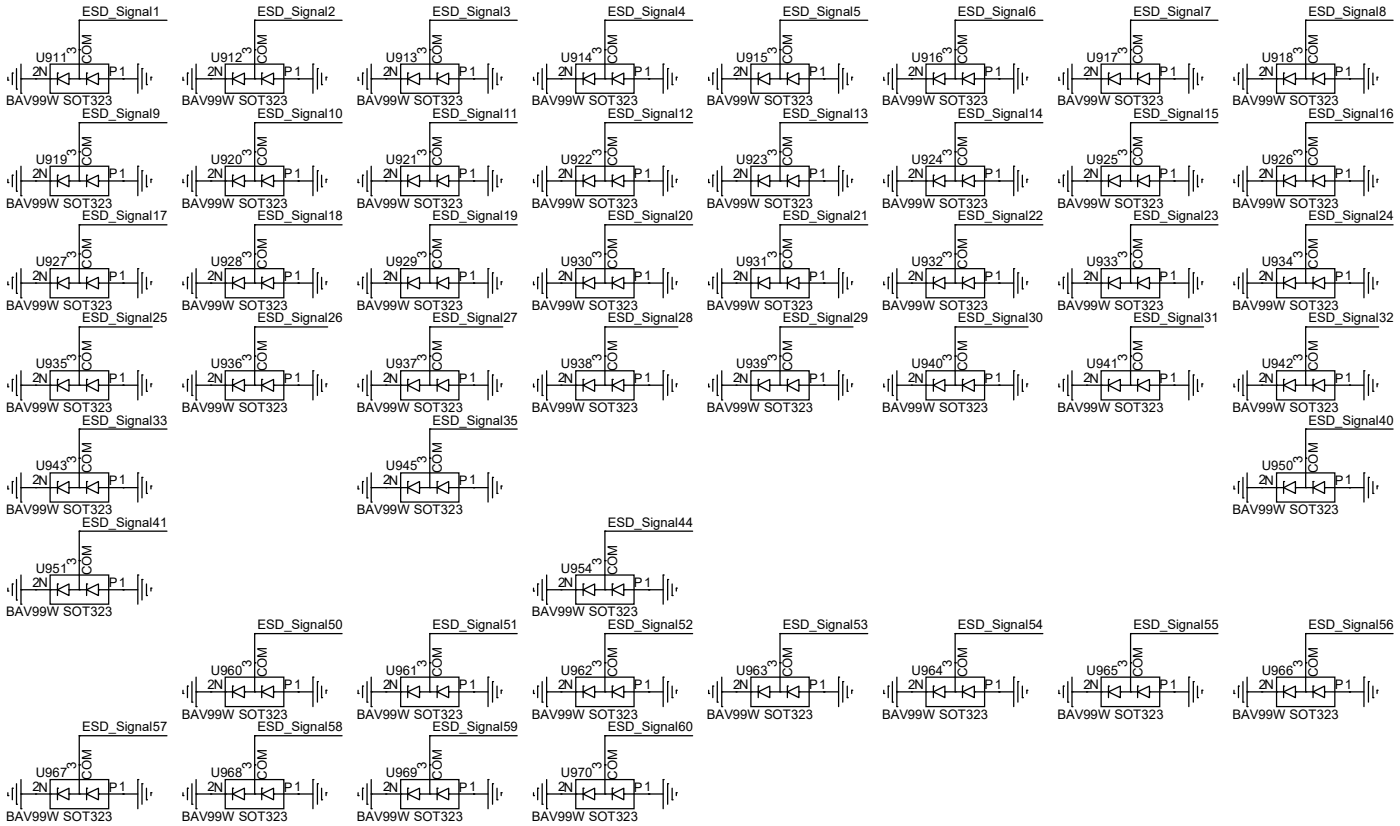

AnalogIn[1:64]

AnalogIn[1:64]

GEM_In[1:64]

GEM_In[1:64]

VCC3.3VA

VCC3.3VA

GND

GEM_In1 R1167 100 ESD_Signal1 C1219 10nF AnalogIn1
GEM_In5 R1171 100 ESD_Signal5 C1223 10nF AnalogIn5
GEM_In9 R1175 100 ESD_Signal9 C1227 10nF AnalogIn9
GEM_In13 R1179 100 ESD_Signal13 C1231 10nF AnalogIn13
GEM_In17 R1183 100 ESD_Signal17 C1235 10nF AnalogIn17
GEM_In21 R1187 100 ESD_Signal21 C1239 10nF AnalogIn21
GEM_In25 R1191 100 ESD_Signal25 C1243 10nF AnalogIn25
GEM_In29 R1195 100 ESD_Signal29 C1247 10nF AnalogIn29
GEM_In33 R1199 100 ESD_Signal33 C1251 10nF AnalogIn33
GEM_In37 AnalogIn37
GEM_In41 R1207 100 ESD_Signal41 C1259 10nF AnalogIn41
GEM_In45 AnalogIn45
GEM_In49 AnalogIn49
GEM_In53 R1219 100 ESD_Signal53 C1271 10nF AnalogIn53
GEM_In57 R1223 100 ESD_Signal57 C1275 10nF AnalogIn57
GEM_In61 AnalogIn61

GEM_In2 R1168 100 ESD_Signal2 C1220 10nF AnalogIn2
GEM_In6 R1172 100 ESD_Signal6 C1224 10nF AnalogIn6
GEM_In10 R1176 100 ESD_Signal10 C1228 10nF AnalogIn10
GEM_In14 R1180 100 ESD_Signal14 C1232 10nF AnalogIn14
GEM_In18 R1184 100 ESD_Signal18 C1236 10nF AnalogIn18
GEM_In22 R1188 100 ESD_Signal22 C1240 10nF AnalogIn22
GEM_In26 R1192 100 ESD_Signal26 C1244 10nF AnalogIn26
GEM_In30 R1196 100 ESD_Signal30 C1248 10nF AnalogIn30
GEM_In34 AnalogIn34
GEM_In38 AnalogIn38
GEM_In42 AnalogIn42
GEM_In46 AnalogIn46
GEM_In50 R1216 100 ESD_Signal50 C1268 10nF AnalogIn50
GEM_In54 R1220 100 ESD_Signal54 C1272 10nF AnalogIn54
GEM_In58 R1224 100 ESD_Signal58 C1276 10nF AnalogIn58
GEM_In62 AnalogIn62

GEM_In3 R1169 100 ESD_Signal3 C1221 10nF AnalogIn3
GEM_In7 R1173 100 ESD_Signal7 C1225 10nF AnalogIn7
GEM_In11 R1177 100 ESD_Signal11 C1229 10nF AnalogIn11
GEM_In15 R1181 100 ESD_Signal15 C1233 10nF AnalogIn15
GEM_In19 R1185 100 ESD_Signal19 C1237 10nF AnalogIn19
GEM_In23 R1189 100 ESD_Signal23 C1241 10nF AnalogIn23
GEM_In27 R1193 100 ESD_Signal27 C1245 10nF AnalogIn27
GEM_In31 R1197 100 ESD_Signal31 C1249 10nF AnalogIn31
GEM_In35 R1201 100 ESD_Signal35 C1253 10nF AnalogIn35
GEM_In39 AnalogIn39
GEM_In43 AnalogIn43
GEM_In47 AnalogIn47
GEM_In51 R1217 100 ESD_Signal51 C1269 10nF AnalogIn51
GEM_In55 R1221 100 ESD_Signal55 C1273 10nF AnalogIn55
GEM_In59 R1225 100 ESD_Signal59 C1277 10nF AnalogIn59
GEM_In63 AnalogIn63

GEM_In4 R1170 100 ESD_Signal4 C1222 10nF AnalogIn4
GEM_In8 R1174 100 ESD_Signal8 C1226 10nF AnalogIn8
GEM_In12 R1178 100 ESD_Signal12 C1230 10nF AnalogIn12
GEM_In16 R1182 100 ESD_Signal16 C1234 10nF AnalogIn16
GEM_In20 R1186 100 ESD_Signal20 C1238 10nF AnalogIn20
GEM_In24 R1190 100 ESD_Signal24 C1242 10nF AnalogIn24
GEM_In28 R1194 100 ESD_Signal28 C1246 10nF AnalogIn28
GEM_In32 R1198 100 ESD_Signal32 C1250 10nF AnalogIn32
GEM_In36 AnalogIn36
GEM_In40 R1206 100 ESD_Signal40 C1258 10nF AnalogIn40
GEM_In44 R1210 100 ESD_Signal44 C1262 10nF AnalogIn44
GEM_In48 AnalogIn48
GEM_In52 R1218 100 ESD_Signal52 C1270 10nF AnalogIn52
GEM_In56 R1222 100 ESD_Signal56 C1274 10nF AnalogIn56
GEM_In60 R1226 100 ESD_Signal60 C1278 10nF AnalogIn60
GEM_In64 AnalogIn64

Title	SDHCal FEB	
Size: Custom	Document Number: ASIC D3 -- Analog In	Rev: V1.0
Date: Monday, January 22, 2018	Sheet 32 of 48	

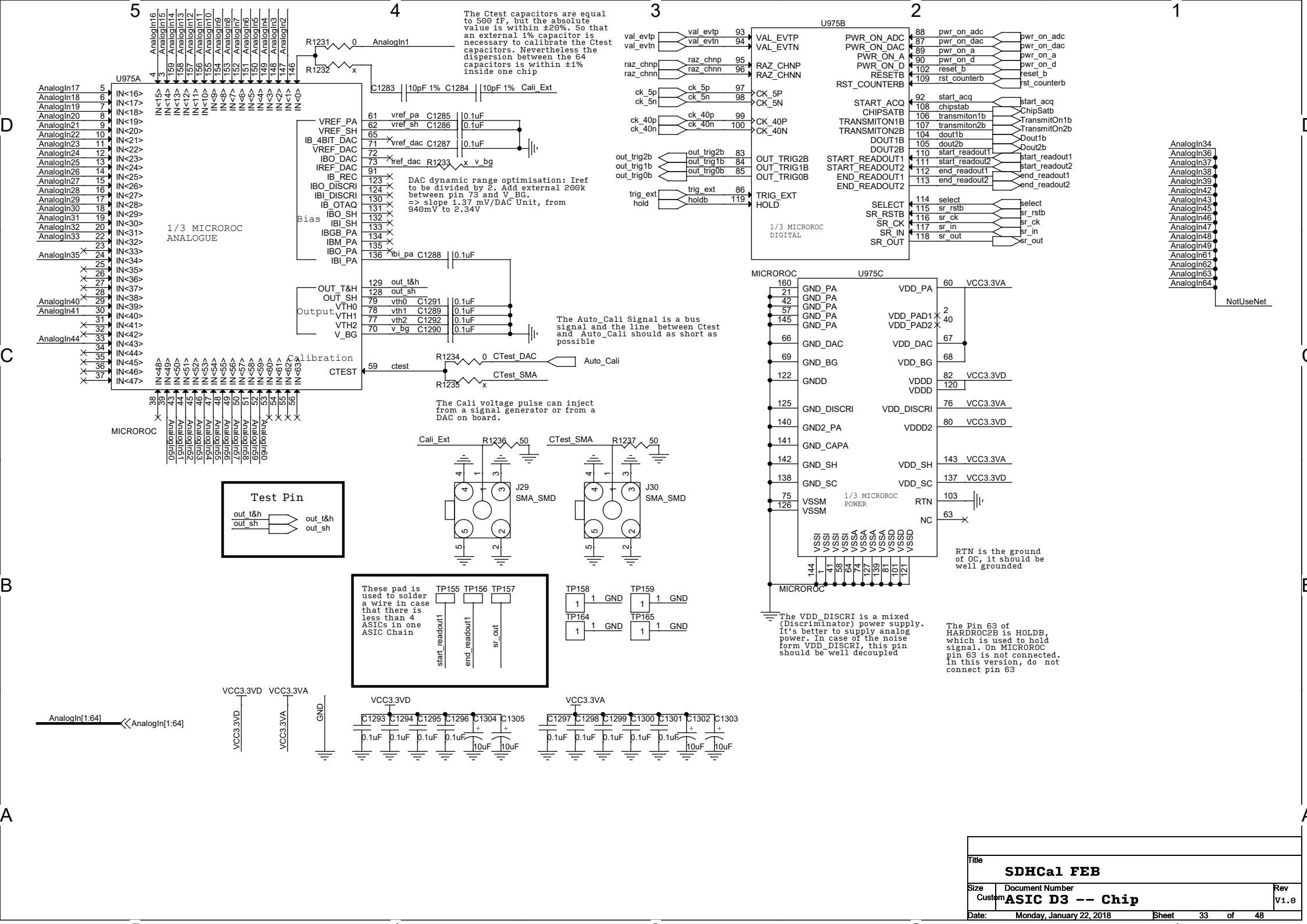
U975A
1/3 MICROROC ANALOGUE
U975B
1/3 MICROROC DIGITAL
U975C
1/3 MICROROC POWER
MICROROC
Test Pin
The Ctest capacitors are equal to 500 fF, but the absolute value is within ±20%. So that an external 1% capacitor is necessary to calibrate the Ctest capacitors. Nevertheless the dispersion between the 64 capacitors is within ±1% inside one chip
DAC dynamic range optimisation: Iref to be divided by 2. Add external 200k between pin 73 and V_BG. => slope 1.37 mV/DAC Unit, from 940mV to 2.34V
The Auto_Cali Signal is a bus signal and the line between Ctest and Auto_Cali should as short as possible
The Cali voltage pulse can inject from a signal generator or from a DAC on board.
These pad is used to solder a wire in case that there is less than 4 ASICs in one ASIC Chain
RTN is the ground of OC, it should be well grounded
The VDD_DISCRI is a mixed (Discriminator) power supply. It's better to supply analog power. In case of the noise form VDD_DISCRI, this pin should be well decoupled
The Pin 63 of HARDROC2B is HOLDB, which is used to hold signal. On MICROROC pin 63 is not connected. In this version, do not connect pin 63
NotUseNet
Title
SDHCal FEB
Size Custom
Document Number
ASIC D3 -- Chip
Rev V1.0
Date: Monday, January 22, 2018
Sheet 33 of 48

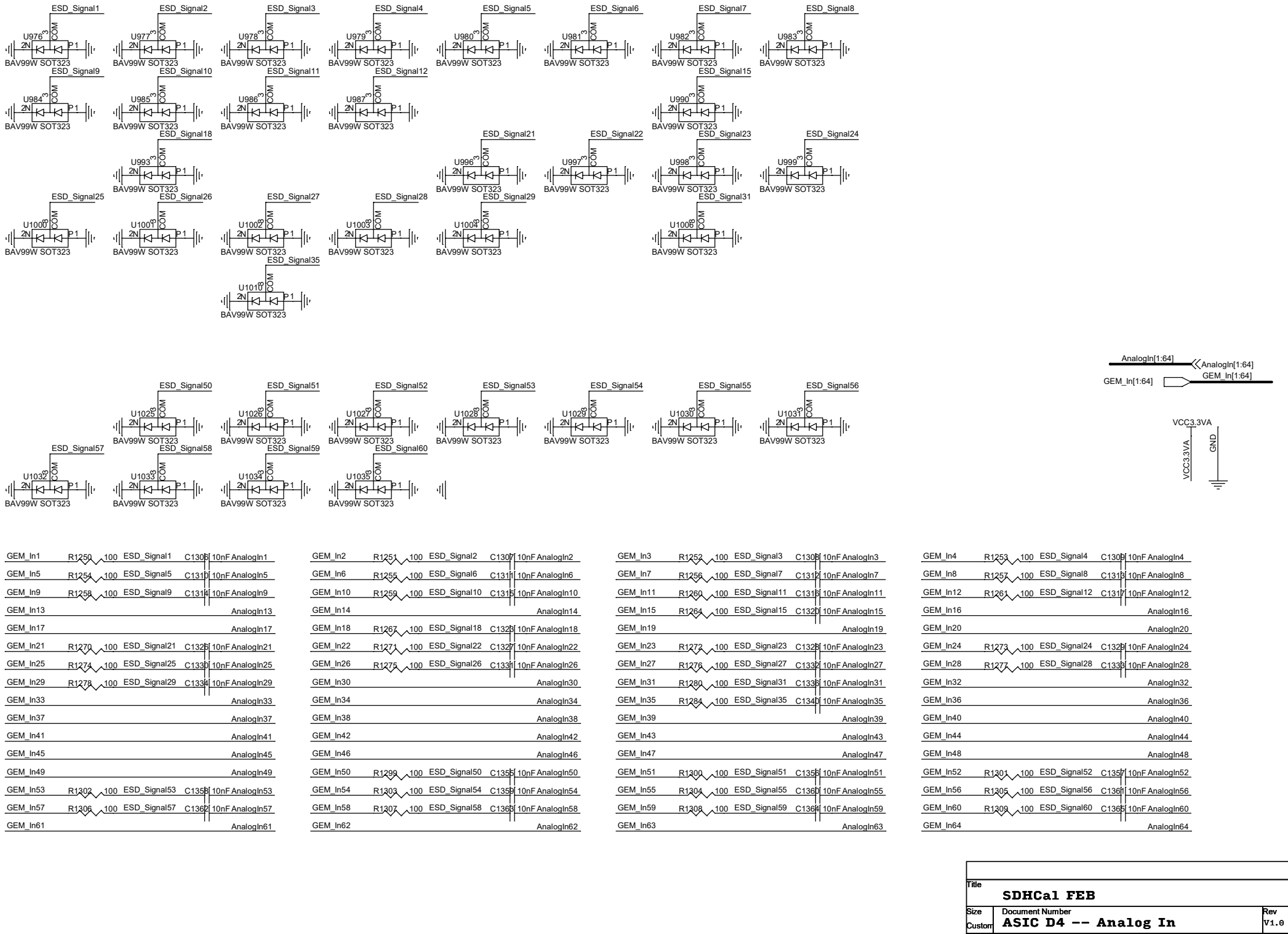
ESD_Signal1 U976 BAV99W SOT323
ESD_Signal2 U977 BAV99W SOT323
ESD_Signal3 U978 BAV99W SOT323
ESD_Signal4 U979 BAV99W SOT323
ESD_Signal5 U980 BAV99W SOT323
ESD_Signal6 U981 BAV99W SOT323
ESD_Signal7 U982 BAV99W SOT323
ESD_Signal8 U983 BAV99W SOT323
ESD_Signal9 U984 BAV99W SOT323
ESD_Signal10 U985 BAV99W SOT323
ESD_Signal11 U986 BAV99W SOT323
ESD_Signal12 U987 BAV99W SOT323
ESD_Signal15 U990 BAV99W SOT323
ESD_Signal18 U993 BAV99W SOT323
ESD_Signal21 U996 BAV99W SOT323
ESD_Signal22 U997 BAV99W SOT323
ESD_Signal23 U998 BAV99W SOT323
ESD_Signal24 U999 BAV99W SOT323
ESD_Signal25 U1000 BAV99W SOT323
ESD_Signal26 U1001 BAV99W SOT323
ESD_Signal27 U1002 BAV99W SOT323
ESD_Signal28 U1003 BAV99W SOT323
ESD_Signal29 U1004 BAV99W SOT323
ESD_Signal31 U1006 BAV99W SOT323
ESD_Signal35 U1010 BAV99W SOT323
ESD_Signal50 U1025 BAV99W SOT323
ESD_Signal51 U1026 BAV99W SOT323
ESD_Signal52 U1027 BAV99W SOT323
ESD_Signal53 U1028 BAV99W SOT323
ESD_Signal54 U1029 BAV99W SOT323
ESD_Signal55 U1030 BAV99W SOT323
ESD_Signal56 U1031 BAV99W SOT323
ESD_Signal57 U1032 BAV99W SOT323
ESD_Signal58 U1033 BAV99W SOT323
ESD_Signal59 U1034 BAV99W SOT323
ESD_Signal60 U1035 BAV99W SOT323
AnalogIn[1:64]
AnalogIn[1:64]
GEM_In[1:64]
GEM_In[1:64]
VCC3.3VA
VCC3.3VA
GND
GEM_In1 R1250 100 ESD_Signal1 C1306 10nF AnalogIn1
GEM_In5 R1254 100 ESD_Signal5 C1310 10nF AnalogIn5
GEM_In9 R1258 100 ESD_Signal9 C1314 10nF AnalogIn9
GEM_In13 AnalogIn13
GEM_In17 AnalogIn17
GEM_In21 R1270 100 ESD_Signal21 C1326 10nF AnalogIn21
GEM_In25 R1274 100 ESD_Signal25 C1330 10nF AnalogIn25
GEM_In29 R1278 100 ESD_Signal29 C1334 10nF AnalogIn29
GEM_In33 AnalogIn33
GEM_In37 AnalogIn37
GEM_In41 AnalogIn41
GEM_In45 AnalogIn45
GEM_In49 AnalogIn49
GEM_In53 R1302 100 ESD_Signal53 C1358 10nF AnalogIn53
GEM_In57 R1306 100 ESD_Signal57 C1362 10nF AnalogIn57
GEM_In61 AnalogIn61
GEM_In2 R1251 100 ESD_Signal2 C1307 10nF AnalogIn2
GEM_In6 R1255 100 ESD_Signal6 C1311 10nF AnalogIn6
GEM_In10 R1259 100 ESD_Signal10 C1315 10nF AnalogIn10
GEM_In14 AnalogIn14
GEM_In18 R1267 100 ESD_Signal18 C1323 10nF AnalogIn18
GEM_In22 R1271 100 ESD_Signal22 C1327 10nF AnalogIn22
GEM_In26 R1275 100 ESD_Signal26 C1331 10nF AnalogIn26
GEM_In30 AnalogIn30
GEM_In34 AnalogIn34
GEM_In38 AnalogIn38
GEM_In42 AnalogIn42
GEM_In46 AnalogIn46
GEM_In50 R1299 100 ESD_Signal50 C1355 10nF AnalogIn50
GEM_In54 R1303 100 ESD_Signal54 C1359 10nF AnalogIn54
GEM_In58 R1307 100 ESD_Signal58 C1363 10nF AnalogIn58
GEM_In62 AnalogIn62
GEM_In3 R1252 100 ESD_Signal3 C1308 10nF AnalogIn3
GEM_In7 R1256 100 ESD_Signal7 C1312 10nF AnalogIn7
GEM_In11 R1260 100 ESD_Signal11 C1316 10nF AnalogIn11
GEM_In15 R1264 100 ESD_Signal15 C1320 10nF AnalogIn15
GEM_In19 AnalogIn19
GEM_In23 R1272 100 ESD_Signal23 C1328 10nF AnalogIn23
GEM_In27 R1276 100 ESD_Signal27 C1332 10nF AnalogIn27
GEM_In31 R1280 100 ESD_Signal31 C1336 10nF AnalogIn31
GEM_In35 R1284 100 ESD_Signal35 C1340 10nF AnalogIn35
GEM_In39 AnalogIn39
GEM_In43 AnalogIn43
GEM_In47 AnalogIn47
GEM_In51 R1300 100 ESD_Signal51 C1356 10nF AnalogIn51
GEM_In55 R1304 100 ESD_Signal55 C1360 10nF AnalogIn55
GEM_In59 R1308 100 ESD_Signal59 C1364 10nF AnalogIn59
GEM_In63 AnalogIn63
GEM_In4 R1253 100 ESD_Signal4 C1309 10nF AnalogIn4
GEM_In8 R1257 100 ESD_Signal8 C1313 10nF AnalogIn8
GEM_In12 R1261 100 ESD_Signal12 C1317 10nF AnalogIn12
GEM_In16 AnalogIn16
GEM_In20 AnalogIn20
GEM_In24 R1273 100 ESD_Signal24 C1329 10nF AnalogIn24
GEM_In28 R1277 100 ESD_Signal28 C1333 10nF AnalogIn28
GEM_In32 AnalogIn32
GEM_In36 AnalogIn36
GEM_In40 AnalogIn40
GEM_In44 AnalogIn44
GEM_In48 AnalogIn48
GEM_In52 R1301 100 ESD_Signal52 C1357 10nF AnalogIn52
GEM_In56 R1305 100 ESD_Signal56 C1361 10nF AnalogIn56
GEM_In60 R1309 100 ESD_Signal60 C1365 10nF AnalogIn60
GEM_In64 AnalogIn64
Title
SDHCal FEB
Size
Custom
Document Number
ASIC D4 -- Analog In
Rev
V1.0
Date: Monday, January 22, 2018
Sheet 34 of 48

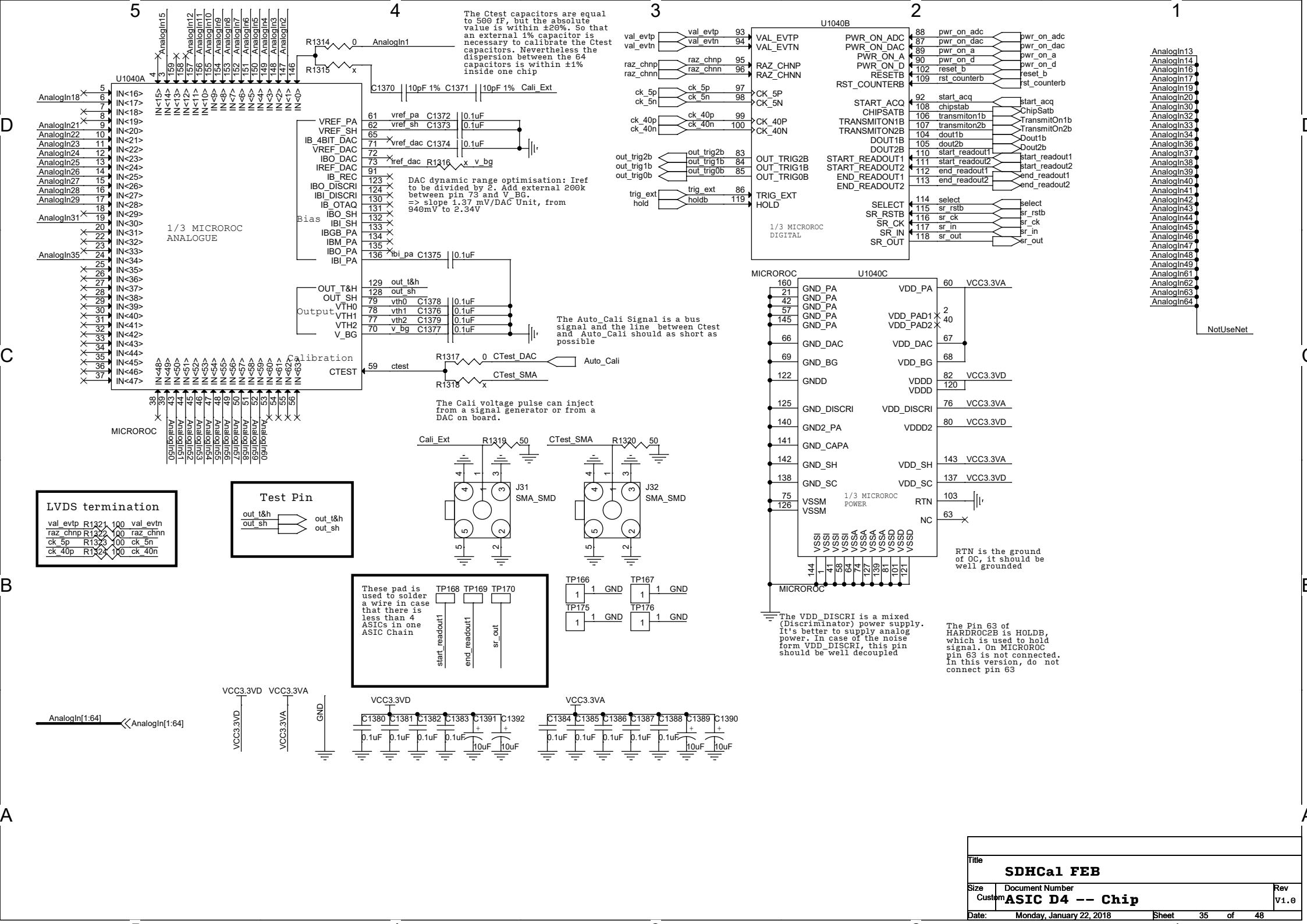

Title	SDHCal FEB
Size	Custom
Document Number	ASIC D4 -- Chip
Rev	V1.0
Date:	Monday, January 22, 2018
Sheet	35 of 48

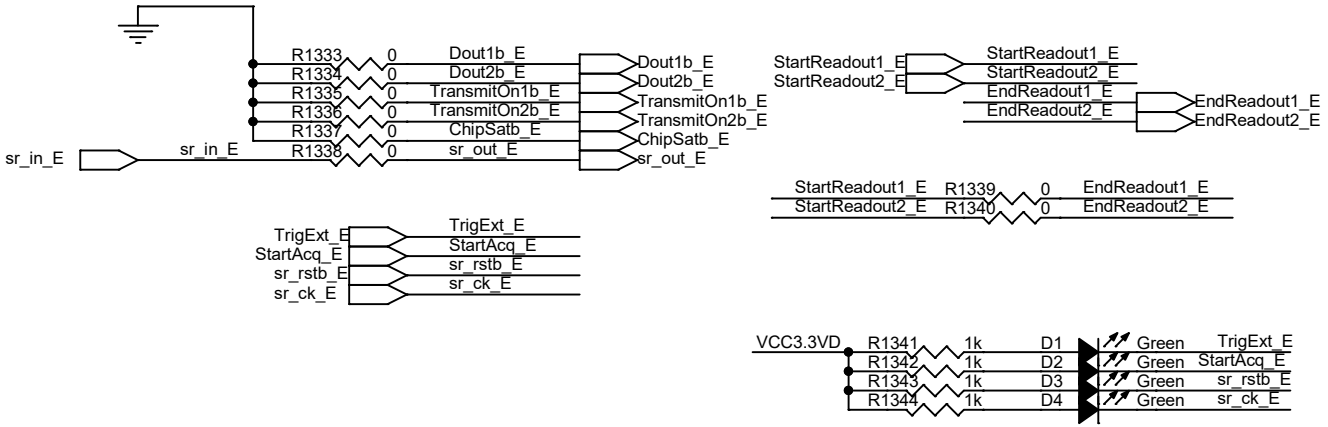

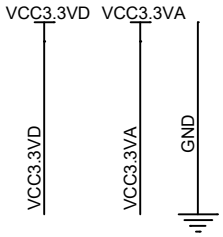

Title	SDHCal FEB	
Size A4	Document Number ASIC E Reserved	Rev V1.0
Date: Monday, January 22, 2018	Sheet 36 of 48	

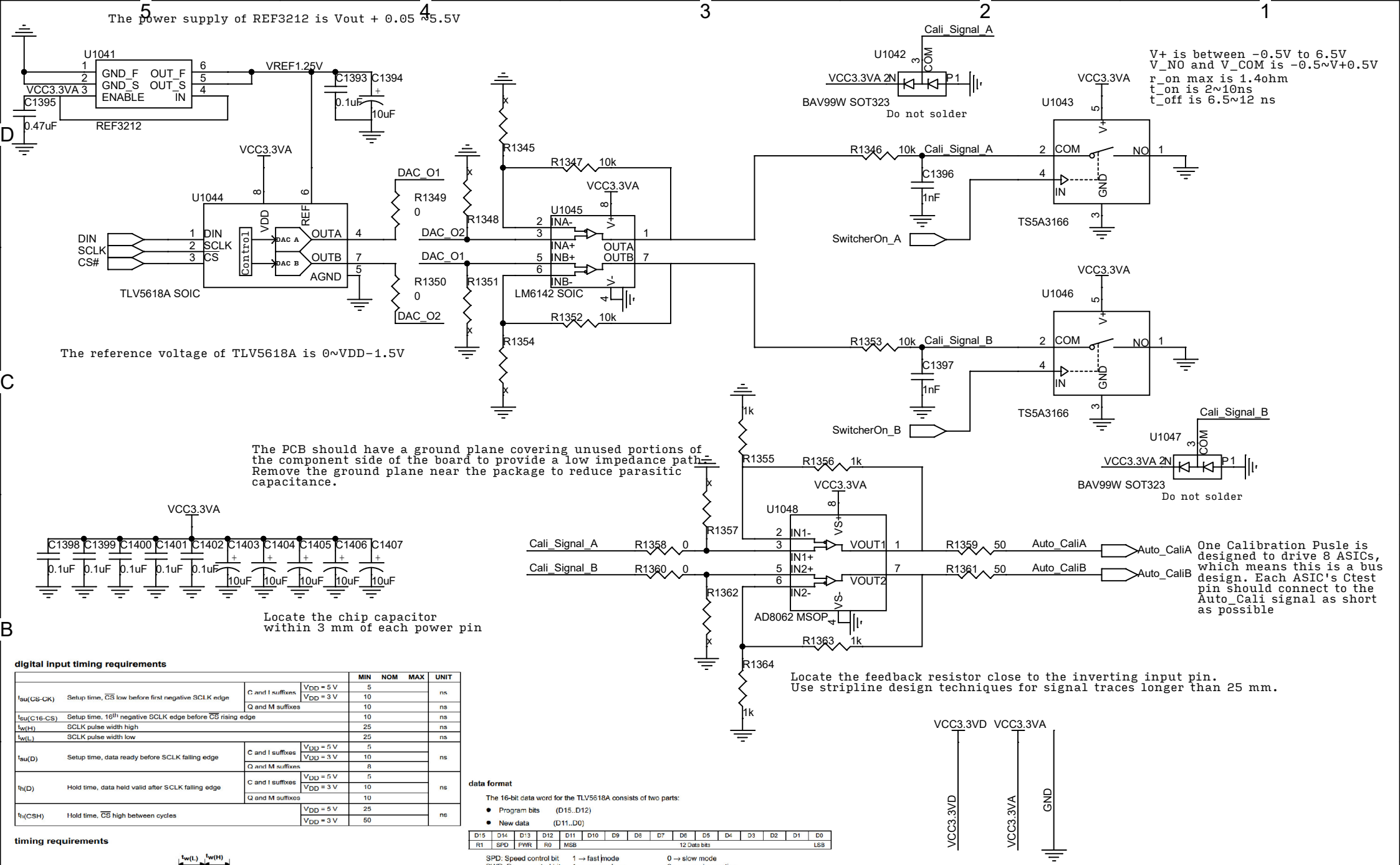

digital input timing requirements

				MIN	NOM	MAX	UNIT
$t_{su(CS-CK)}$	Setup time, $\overline{CS}$ low before first negative SCLK edge	C and I suffixes	V_{DD} = 5 V	5			ns
			V_{DD} = 3 V	10			
		Q and M suffixes		10			ns
$t_{su(C16-CS)}$	Setup time, 16th negative SCLK edge before $\overline{CS}$ rising edge			10			ns
$t_{w(H)}$	SCLK pulse width high			25			ns
$t_{w(L)}$	SCLK pulse width low			25			ns
$t_{su(D)}$	Setup time, data ready before SCLK falling edge	C and I suffixes	V_{DD} = 5 V	5			ns
			V_{DD} = 3 V	10			
		Q and M suffixes		8			
$t_{h(D)}$	Hold time, data held valid after SCLK falling edge	C and I suffixes	V_{DD} = 5 V	5			ns
			V_{DD} = 3 V	10			
		Q and M suffixes		10			
$t_{h(CSH)}$	Hold time, $\overline{CS}$ high between cycles		V_{DD} = 5 V	25			ns
			V_{DD} = 3 V	50			

timing requirements

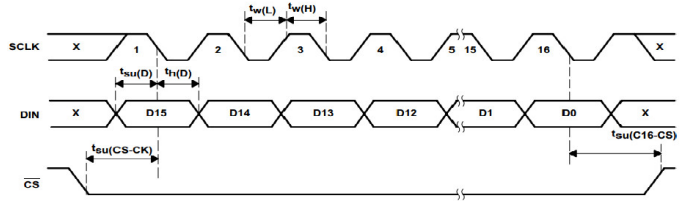

data format

The 16-bit data word for the TLV5618A consists of two parts:

- Program bits (D15..D12)
- New data (D11..D0)

D15	D14	D13	D12	D11	D10	D9	D8	D7	D6	D5	D4	D3	D2	D1	D0
R1	SPD	PWR	R0	MSB					12 Data bits						LSB

SPD: Speed control bit 1 → fast mode 0 → slow mode
PWR: Power control bit 1 → power down 0 → normal operation
On power up, SPD and PWD are reset to 0 (slow mode and normal operation)

The following table lists all possible combinations of register-select bits:

register-select bits

R1	R0	REGISTER
0	0	Write data to DAC B and BUFFER
0	1	Write data to BUFFER
1	0	Write data to DAC A and update DAC B with BUFFER content
1	1	Reserved

The meaning of the 12 data bits depends on the register. If one of the DAC registers or the BUFFER is selected, then the 12 data bits determine the new DAC value:

Title	SDHCal FEB	
Size A4	Document Number Auto Calibration	Rev V1.0
Date: Monday, January 22, 2018	Sheet 37 of 48	

There are 4 kind of signal that need to be distributed.
LVDS signal, Single signal for each chain, Single signal every chain shared and test signal.
For LVDS signal, use LVDS buffer to drive the origin signal into 4 and connect to each chain.
Signal signal for each chain connect to each chain directly
Use logic buffer to drive the shared signal to every chain.
The test signal is switched by switches

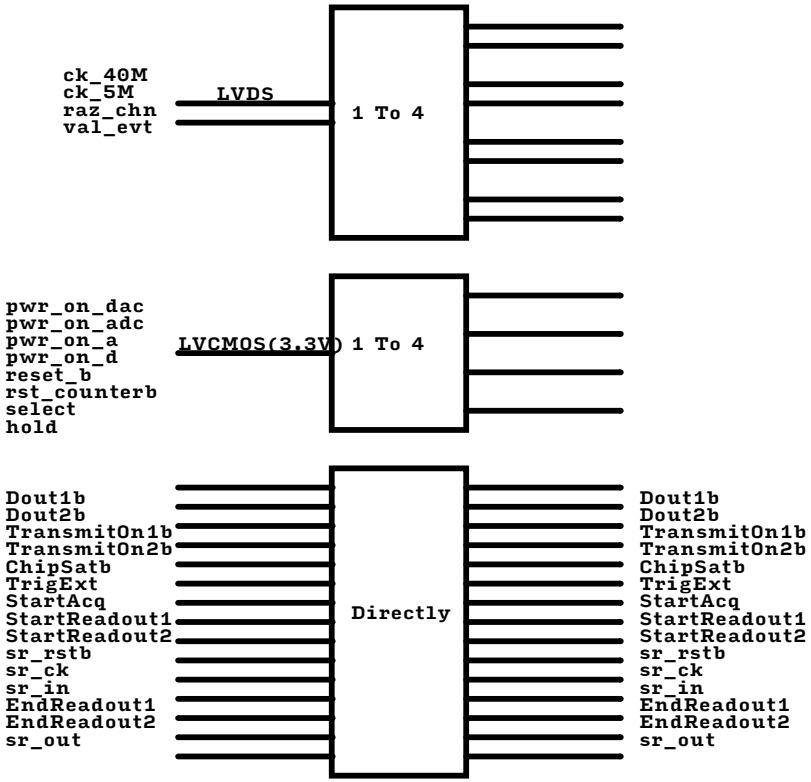

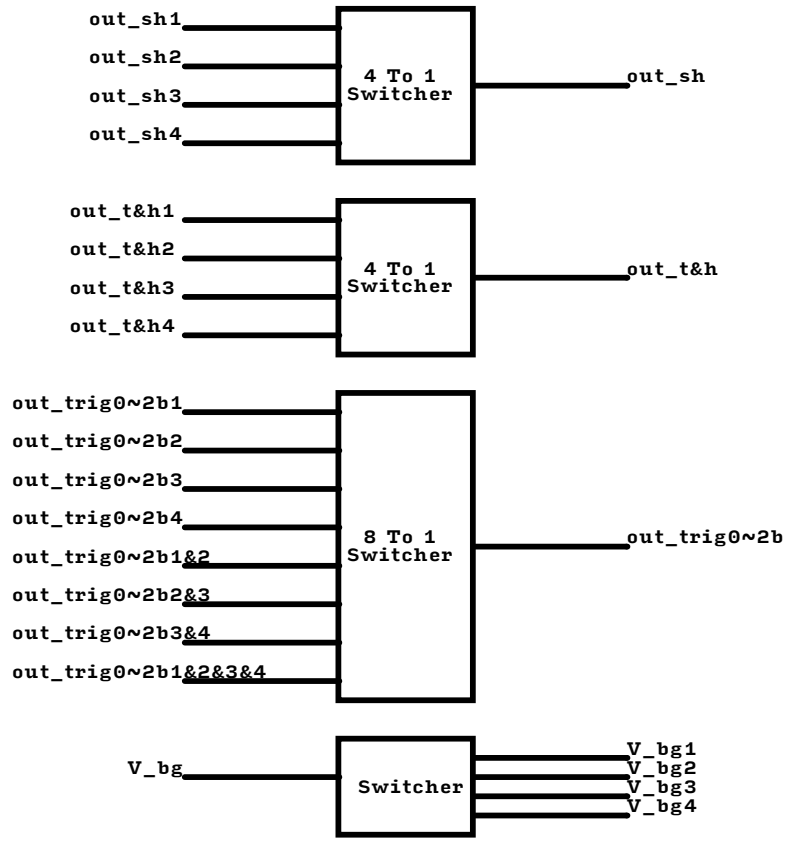

Title: SDHCal FEB		
Size: A4	Document Number: Signal Distributor Read Me	Rev: V1.0
Date: Monday, January 22, 2018	Sheet 38 of 48	

The B pins is forward to the innerside of board

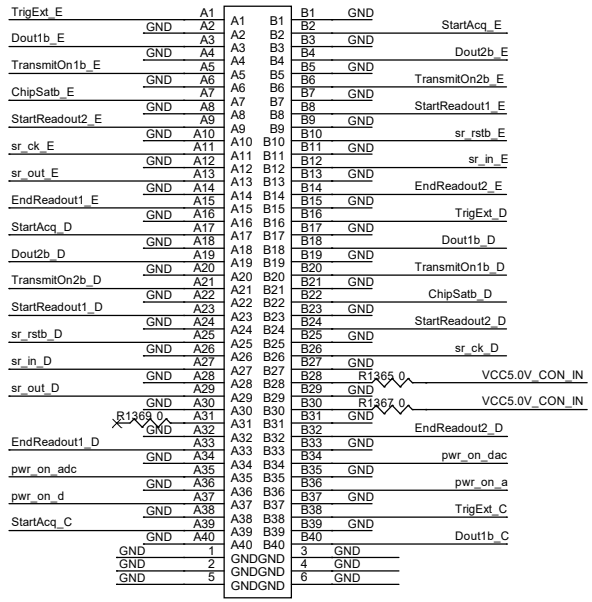

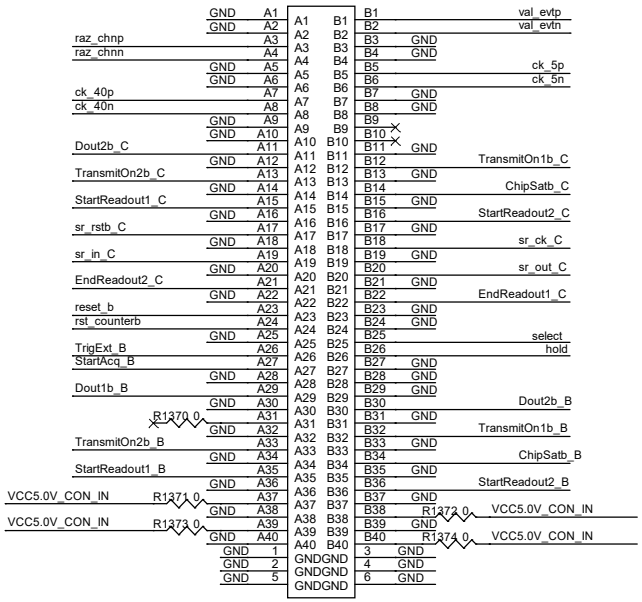

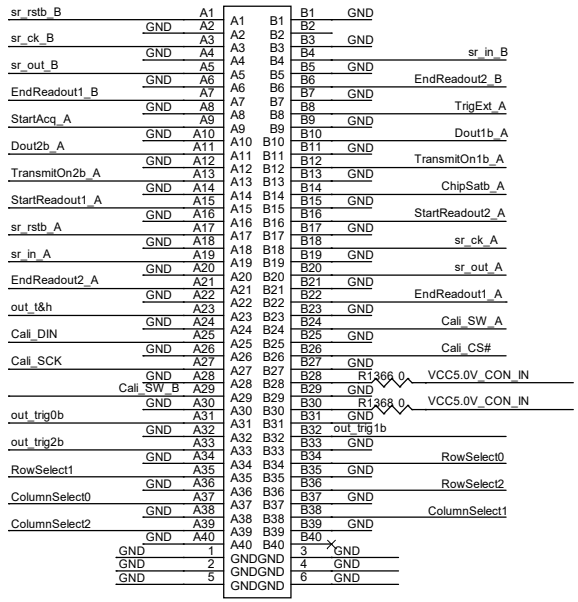

! ! ! **Warnning: The male connector and female connector has different footprint and package.**
The A1 pin of male connector is connected to the A1 pin of female connector, B1(male) connect to B1(female) ...
Note that this is different from ECal system but the signal connection is the same.

Female connector ERNI154744 on FEB
Male connector ERNI 154767 on DIF

Row and Column select:
6 pins

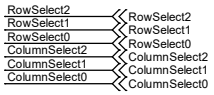

Common control signal:
8 pins

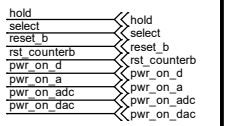

Test signal:
4 pins

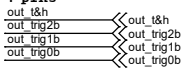

Calibration control:
5 pins

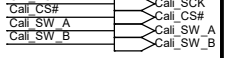

LVDS signals:
4 pairs 8pins

Independent control signals for each chain:
15*5 = 75 pins

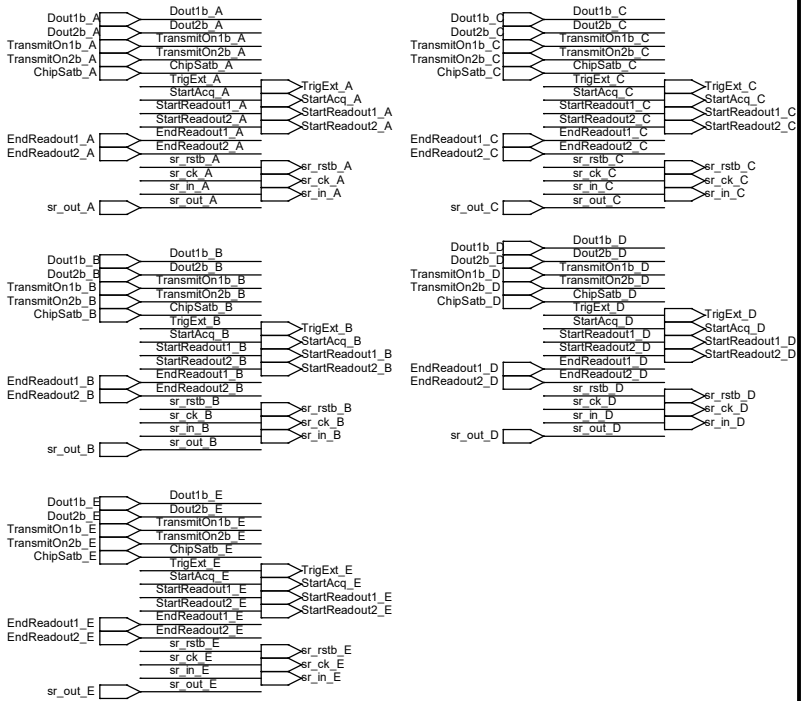

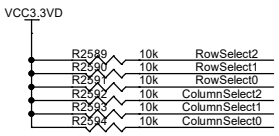

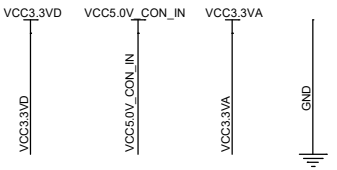

Title: **SDHCal FEB**			
Size: A3	Document Number: **Interface To DAQ**		Rev: V1.0
Date: Wednesday, January 24, 2018	Sheet 39 of 48		

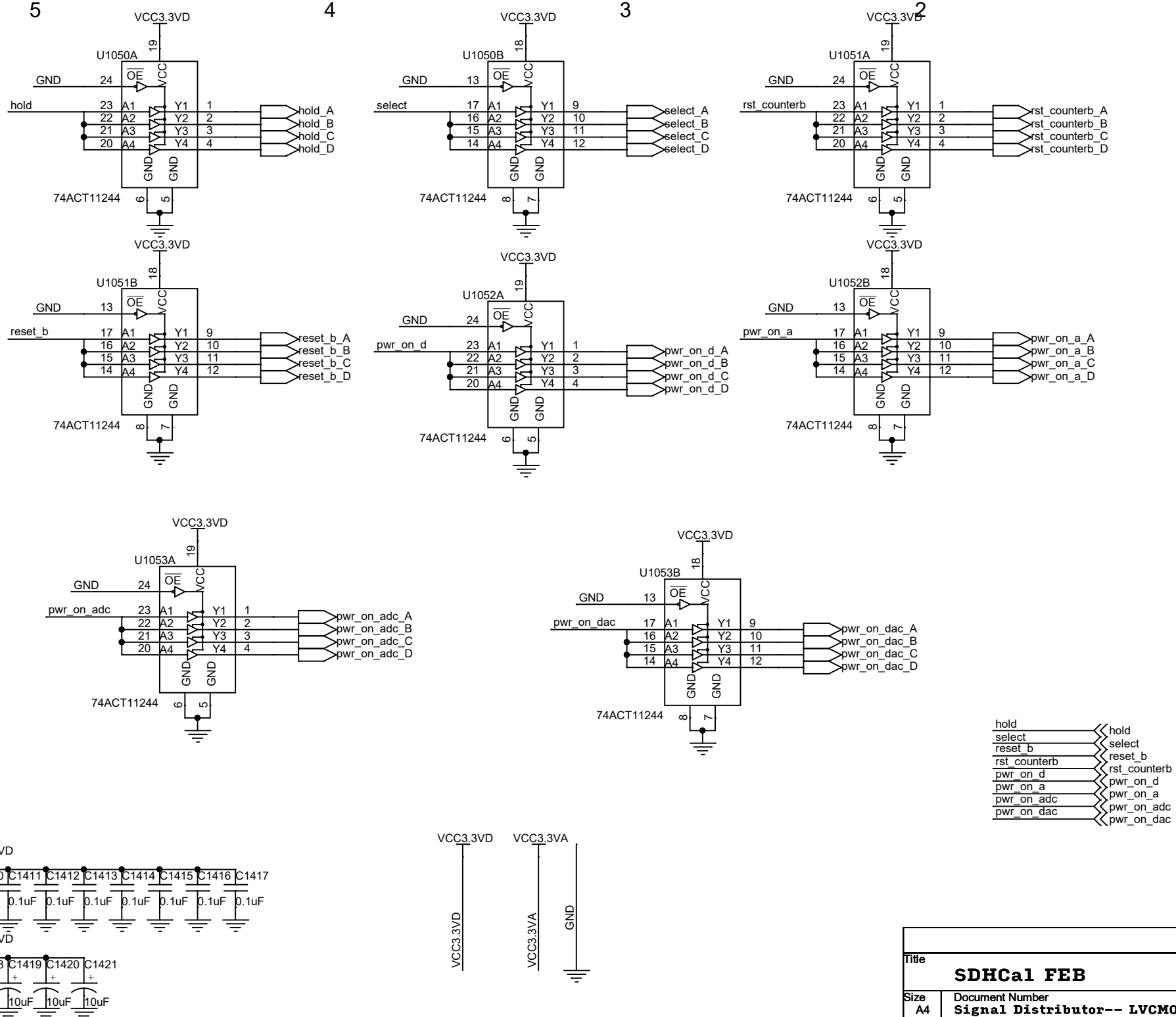

Title	**SDHCal FEB**	
Size A4	Document Number **Signal Distributor-- LVCMOS Driver**	Rev V1.0
Date: Monday, January 22, 2018	Sheet 40 of 48	

Driver enable pins:
When DE is low, the driver is disabled.
When DE is high, the driver is enabled.
There is a 300k ohm pulldown resistor on each pin.

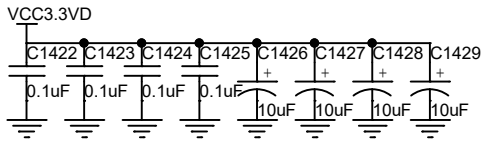

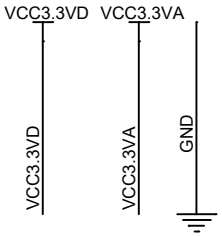

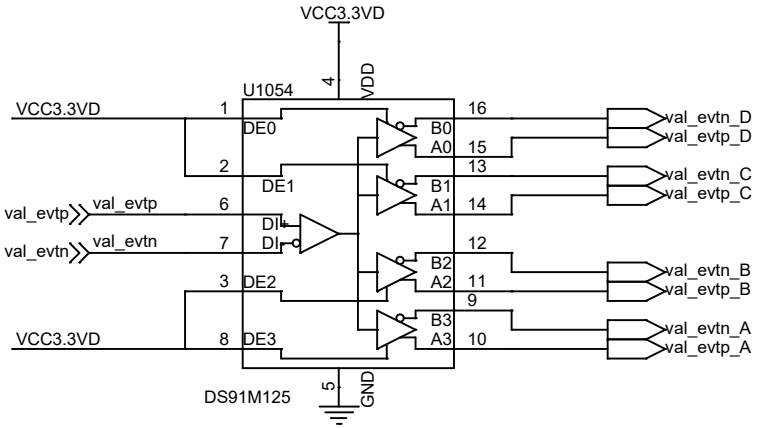

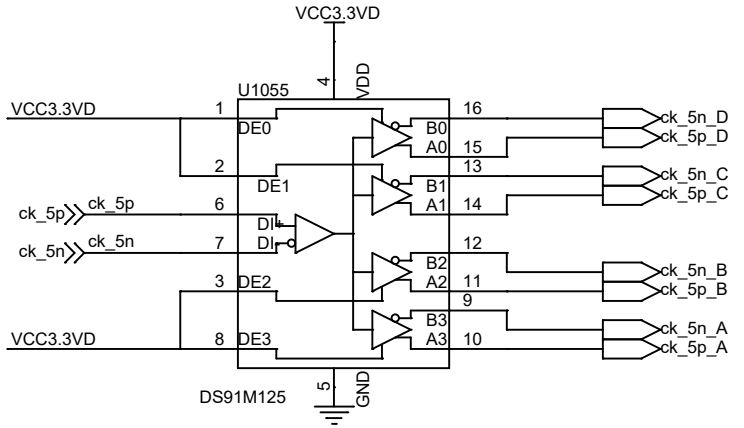

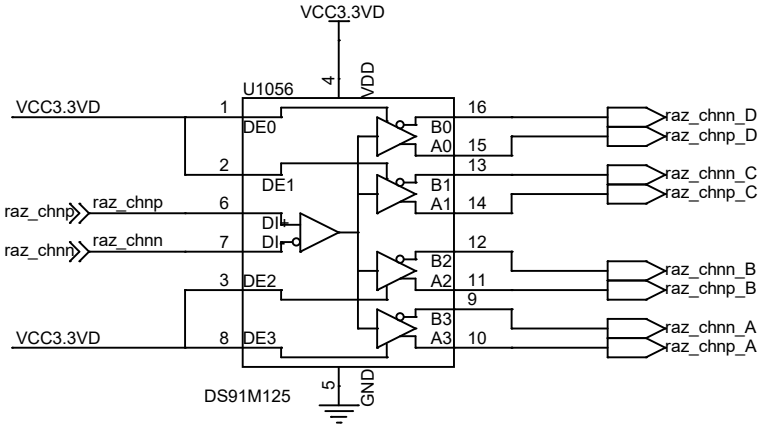

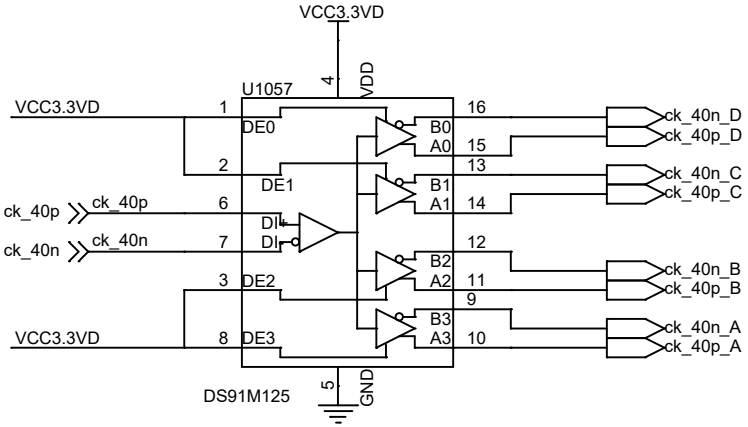

Title	**SDHCal FEB**	
Size A4	Document Number **Signal Distributor--LVDS Buffer**	Rev V1.0
Date: Monday, January 22, 2018	Sheet 41 of 48	

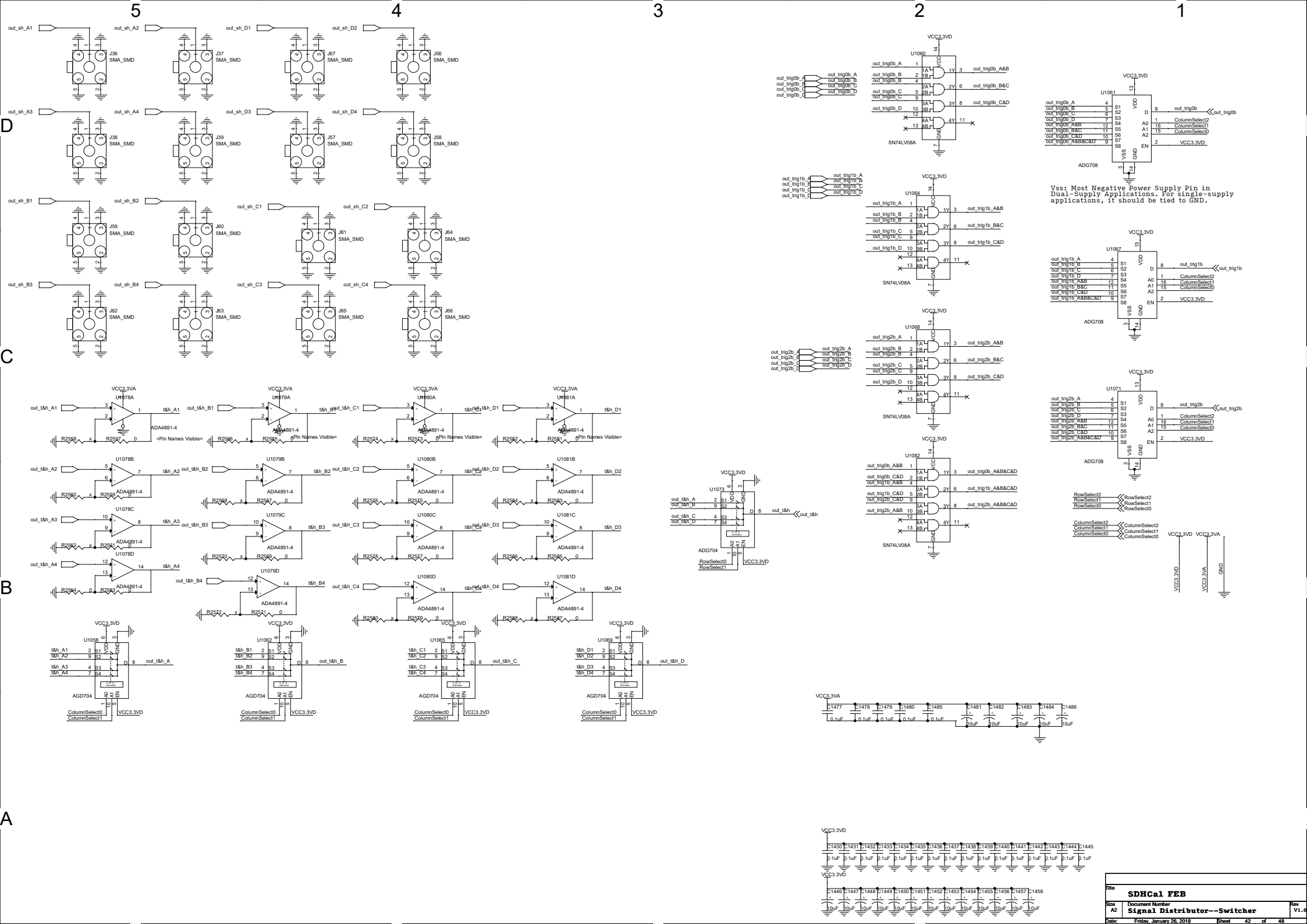
5
4
3
2
1
D
C
B
A
out_sh_A1
out_sh_A2
out_sh_D1
out_sh_D2
J36 SMA_SMD
J37 SMA_SMD
J67 SMA_SMD
J56 SMA_SMD
out_sh_A3
out_sh_A4
out_sh_D3
out_sh_D4
J38 SMA_SMD
J39 SMA_SMD
J57 SMA_SMD
J58 SMA_SMD
out_sh_B1
out_sh_B2
out_sh_C1
out_sh_C2
J59 SMA_SMD
J60 SMA_SMD
J61 SMA_SMD
J64 SMA_SMD
out_sh_B3
out_sh_B4
out_sh_C3
out_sh_C4
J62 SMA_SMD
J63 SMA_SMD
J65 SMA_SMD
J66 SMA_SMD
VCC3.3VA
U1078A
U1079A
U1080A
U1081A
ADA4891-4
out_t&h_A1
out_t&h_B1
out_t&h_C1
out_t&h_D1
t&h_A1
t&h_B1
t&h_C1
t&h_D1
R2558
R2557
R2566
R2565
R2574
R2573
R2582
R2581
<Pin Names Visible>
U1078B
U1079B
U1080B
U1081B
out_t&h_A2
out_t&h_B2
out_t&h_C2
out_t&h_D2
t&h_A2
t&h_B2
t&h_C2
t&h_D2
R2560
R2559
R2568
R2567
R2576
R2575
R2584
R2583
U1078C
U1079C
U1080C
U1081C
out_t&h_A3
out_t&h_B3
out_t&h_C3
out_t&h_D3
t&h_A3
t&h_B3
t&h_C3
t&h_D3
R2562
R2561
R2570
R2569
R2578
R2577
R2586
R2585
U1078D
U1079D
U1080D
U1081D
out_t&h_A4
out_t&h_B4
out_t&h_C4
out_t&h_D4
t&h_A4
t&h_B4
t&h_C4
t&h_D4
R2564
R2563
R2572
R2571
R2580
R2579
R2588
R2587
VCC3.3VD
U1058
U1062
U1065
U1069
t&h_A1
t&h_A2
t&h_A3
t&h_A4
t&h_B1
t&h_B2
t&h_B3
t&h_B4
t&h_C1
t&h_C2
t&h_C3
t&h_C4
t&h_D1
t&h_D2
t&h_D3
t&h_D4
AGD704
out_t&h_A
out_t&h_B
out_t&h_C
out_t&h_D
ColumnSelect0
ColumnSelect1
U1073
out_t&h_A
out_t&h_B
out_t&h_C
out_t&h_D
out_t&h
RowSelect0
RowSelect1
U1060
U1064
U1068
U1082
SN74LV08A
out_trig0b_A
out_trig0b_B
out_trig0b_C
out_trig0b_D
out_trig0b_A&B
out_trig0b_B&C
out_trig0b_C&D
out_trig1b_A
out_trig1b_B
out_trig1b_C
out_trig1b_D
out_trig1b_A&B
out_trig1b_B&C
out_trig1b_C&D
out_trig2b_A
out_trig2b_B
out_trig2b_C
out_trig2b_D
out_trig2b_A&B
out_trig2b_B&C
out_trig2b_C&D
out_trig0b_A&B&C&D
out_trig1b_A&B&C&D
out_trig2b_A&B&C&D
U1061
U1067
U1071
ADG708
out_trig0b
out_trig1b
out_trig2b
ColumnSelect2
ColumnSelect1
ColumnSelect0
RowSelect2
RowSelect1
RowSelect0
Vss: Most Negative Power Supply Pin in Dual-Supply Applications. For single-supply applications, it should be tied to GND.
C1477
C1478
C1479
C1480
C1485
C1481
C1482
C1483
C1484
C1486
0.1uF
10uF
C1430
C1431
C1432
C1433
C1434
C1435
C1436
C1437
C1438
C1439
C1440
C1441
C1442
C1443
C1444
C1445
C1446
C1447
C1448
C1449
C1450
C1451
C1452
C1453
C1454
C1455
C1456
C1457
C1458
Title
SDHCal FEB
Size
A2
Document Number
Signal Distributor--Switcher
Rev
V1.6
Date:
Friday, January 26, 2018
Sheet
42
of
48

This part is the readout array of GEM detector. The effective area of the GEM detector is 30cm*30cm, and the total size is 37.4*37.4. The detail structure of the Pad Readout Array is discribed in the Mechanical structure of Pad Readout Array.pdf

Title	<Title>	
Size A4	Document Number <Doc>	Rev <Rev
Date: Monday, January 22, 2018	Sheet 43 of 48	

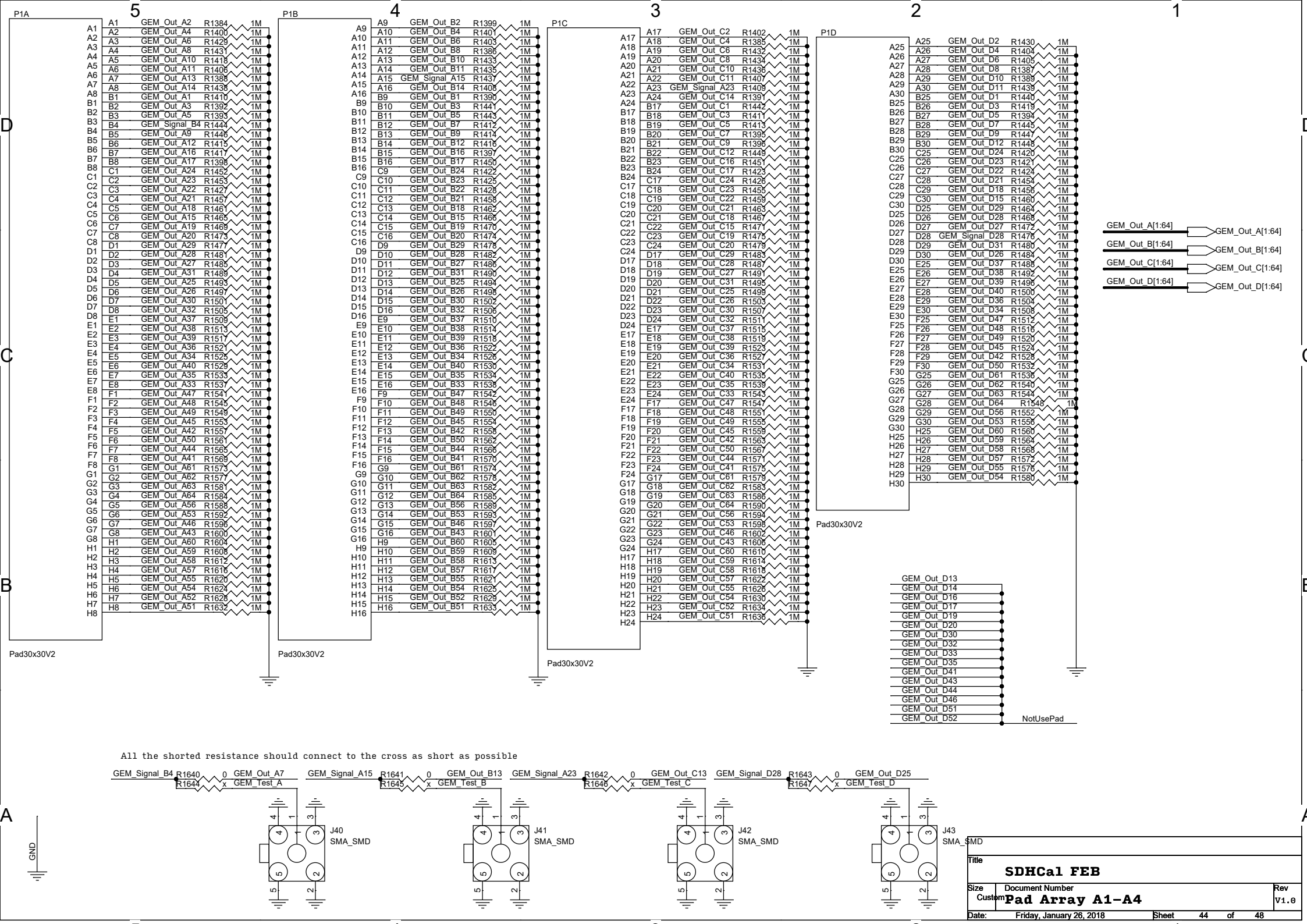

Title	SDHCal FEB
Size	Custom
Document Number	Pad Array A1-A4
Rev	V1.0
Date:	Friday, January 26, 2018
Sheet	44 of 48

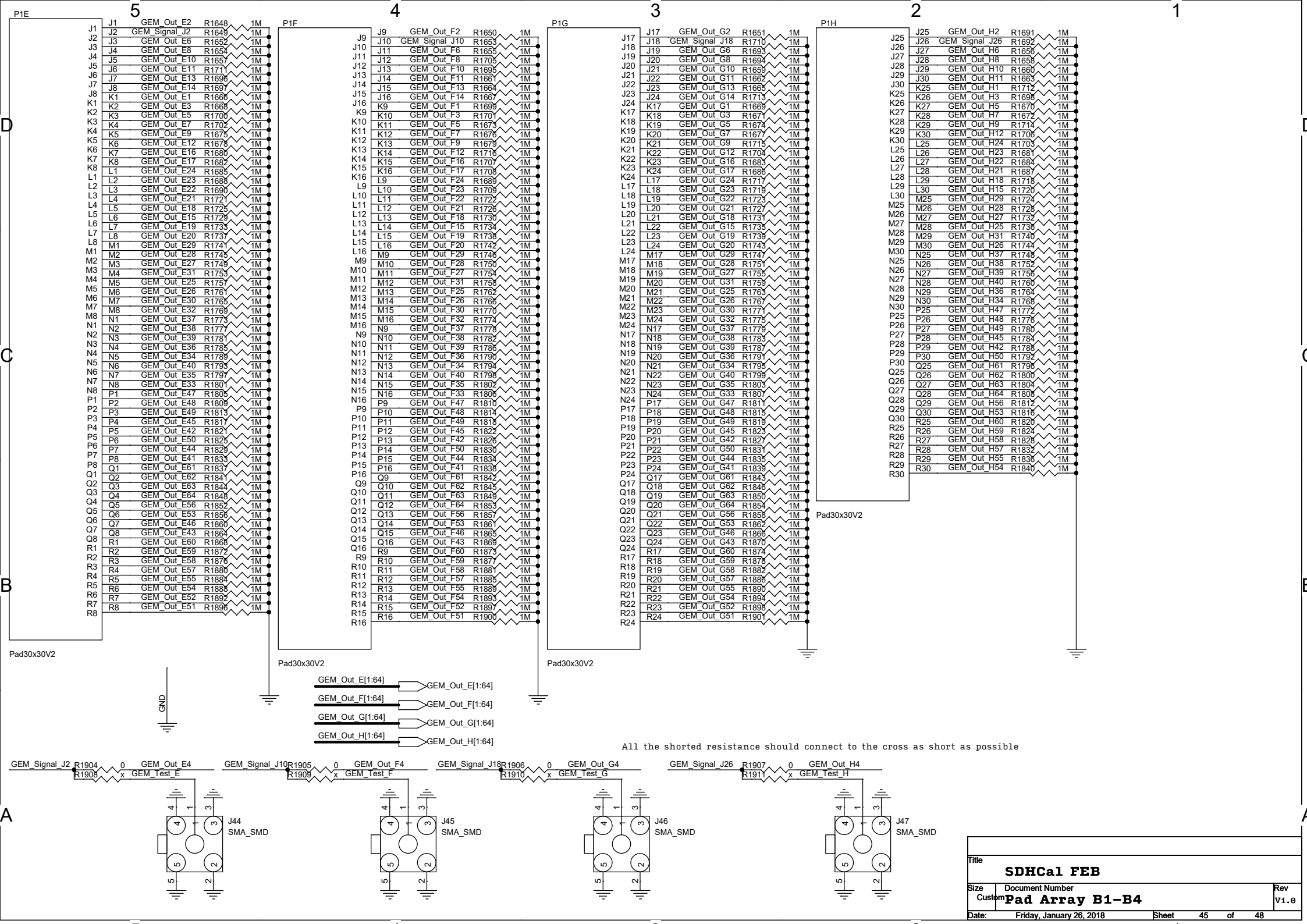
P1E
P1F
P1G
P1H
Pad30x30V2
GEM_Out_E[1:64]
GEM_Out_F[1:64]
GEM_Out_G[1:64]
GEM_Out_H[1:64]
GND
All the shorted resistance should connect to the cross as short as possible
GEM_Signal_J2
GEM_Signal_J10
GEM_Signal_J18
GEM_Signal_J26
GEM_Test_E
GEM_Test_F
GEM_Test_G
GEM_Test_H
J44
J45
J46
J47
SMA_SMD
SDHCal FEB
Pad Array B1-B4
Friday, January 26, 2018
45 of 48
V1.0

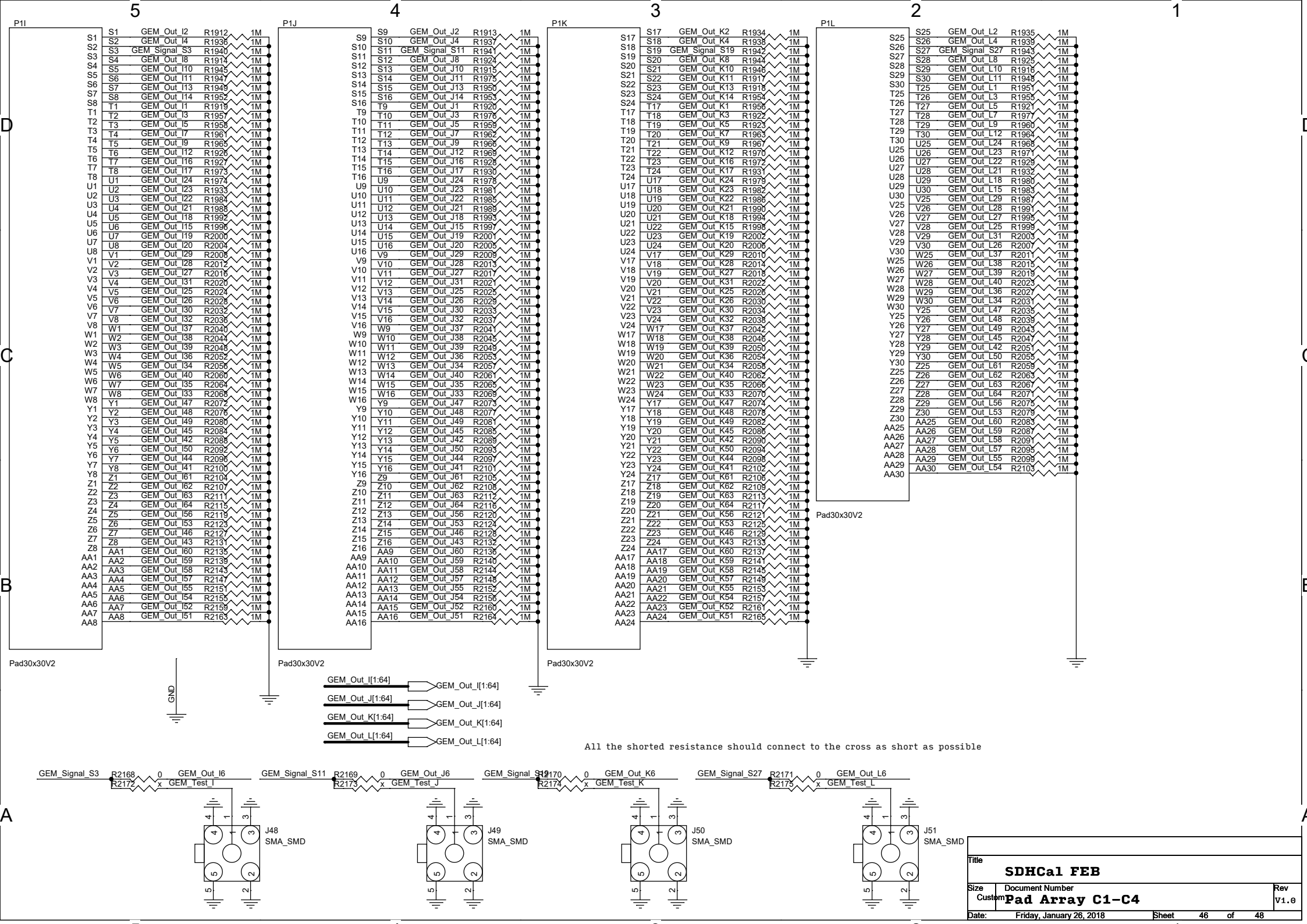
P1I
P1J
P1K
P1L
Pad30x30V2
GND
GEM_Out_I[1:64]
GEM_Out_J[1:64]
GEM_Out_K[1:64]
GEM_Out_L[1:64]
All the shorted resistance should connect to the cross as short as possible
GEM_Signal_S3
GEM_Signal_S11
GEM_Signal_S19
GEM_Signal_S27
GEM_Out_I6
GEM_Out_J6
GEM_Out_K6
GEM_Out_L6
GEM_Test_I
GEM_Test_J
GEM_Test_K
GEM_Test_L
J48
J49
J50
J51
SMA_SMD
Title
SDHCal FEB
Size
Custom
Document Number
Pad Array C1-C4
Rev
V1.0
Date:
Friday, January 26, 2018
Sheet
46
of
48

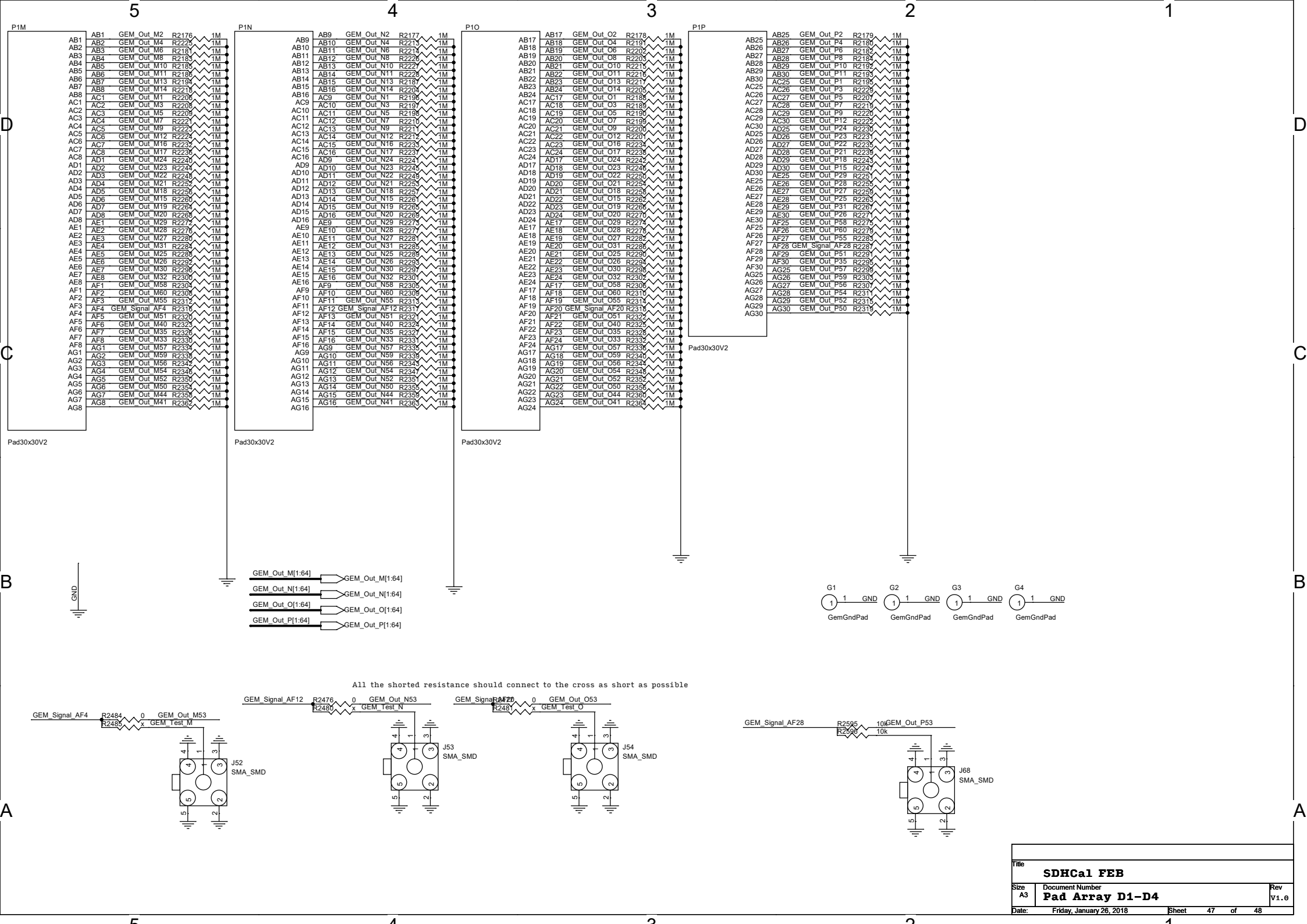

Title	SDHCal FEB
Size	A3
Document Number	Pad Array D1–D4
Rev	V1.0
Date:	Friday, January 26, 2018
Sheet	47 of 48

Analog Power

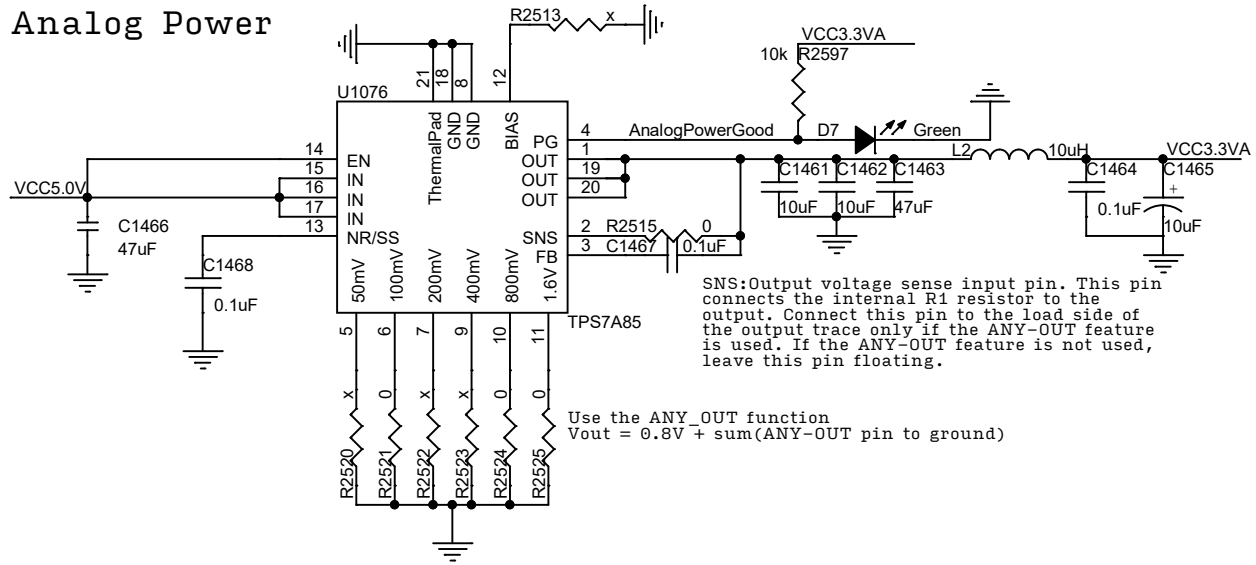

Digital Power

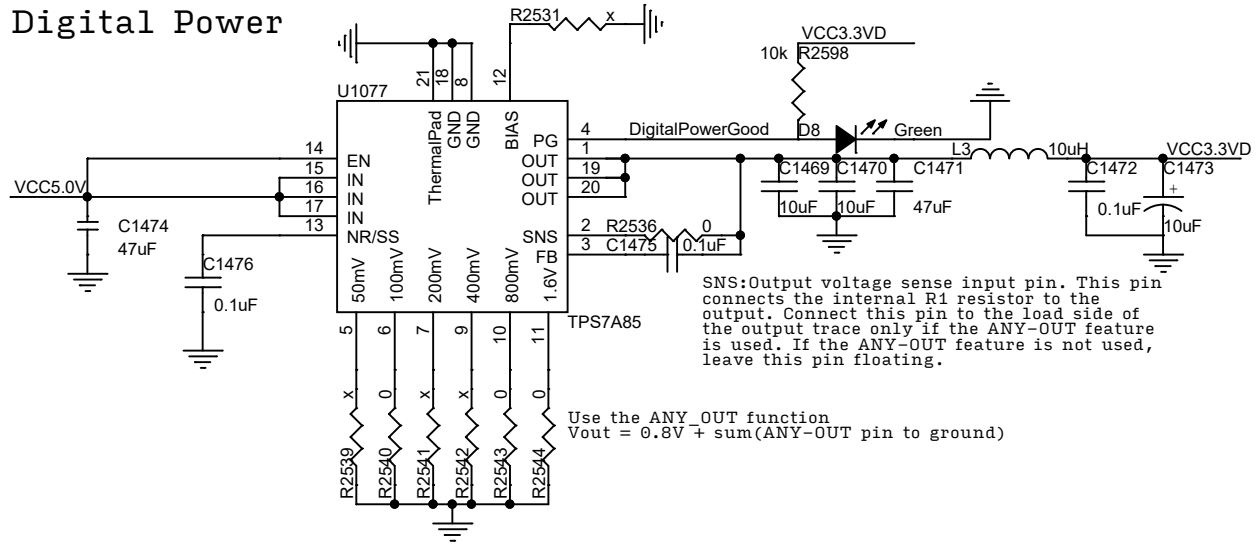

Caution: If using ECal DIF, only VCC5.0V_BOARD_IN is avaliable

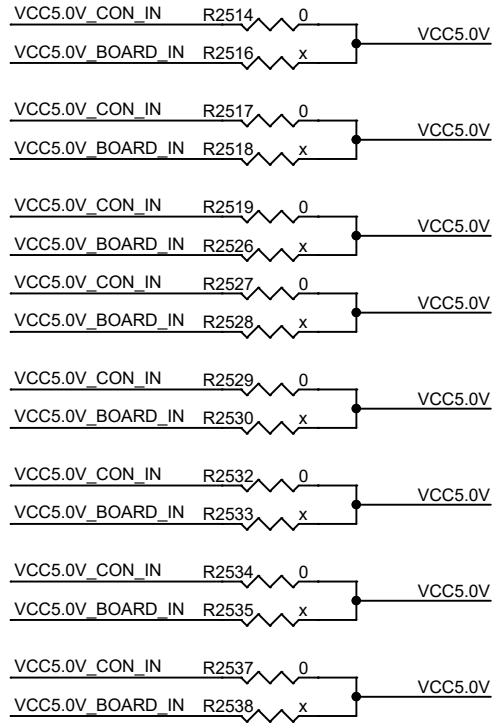

Title	SDHCal FEB	
Size A4	Document Number **Analog Power**	Rev V1.0
Date: Friday, January 26, 2018	Sheet 48 of 48	