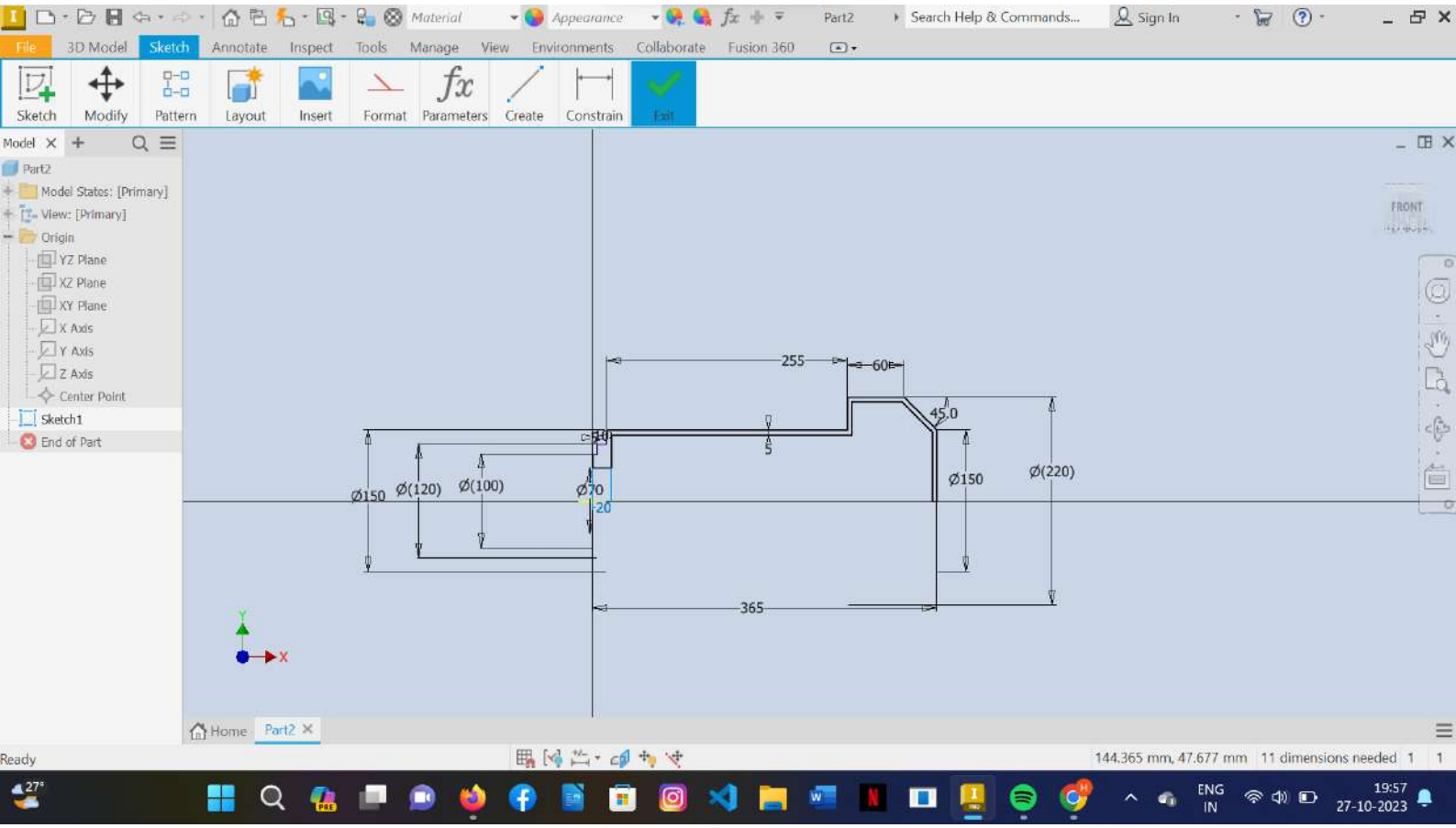
Part2
Search Help & Commands...
Sign In
File
3D Model
Sketch
Annotate
Inspect
Tools
Manage
View
Environments
Collaborate
Fusion 360
Sketch
Modify
Pattern
Layout
Insert
Format
Parameters
Create
Constrain
Exit
Model
Part2
Model States: [Primary]
View: [Primary]
Origin
YZ Plane
XZ Plane
XY Plane
X Axis
Y Axis
Z Axis
Center Point
Sketch1
End of Part
255
60
45.0
5
Ø150
Ø(120)
Ø(100)
Ø70
20
Ø150
Ø(220)
365
FRONT
Home
Part2
Ready
144.365 mm, 47.677 mm
11 dimensions needed
ENG
IN
19:57
27-10-2023

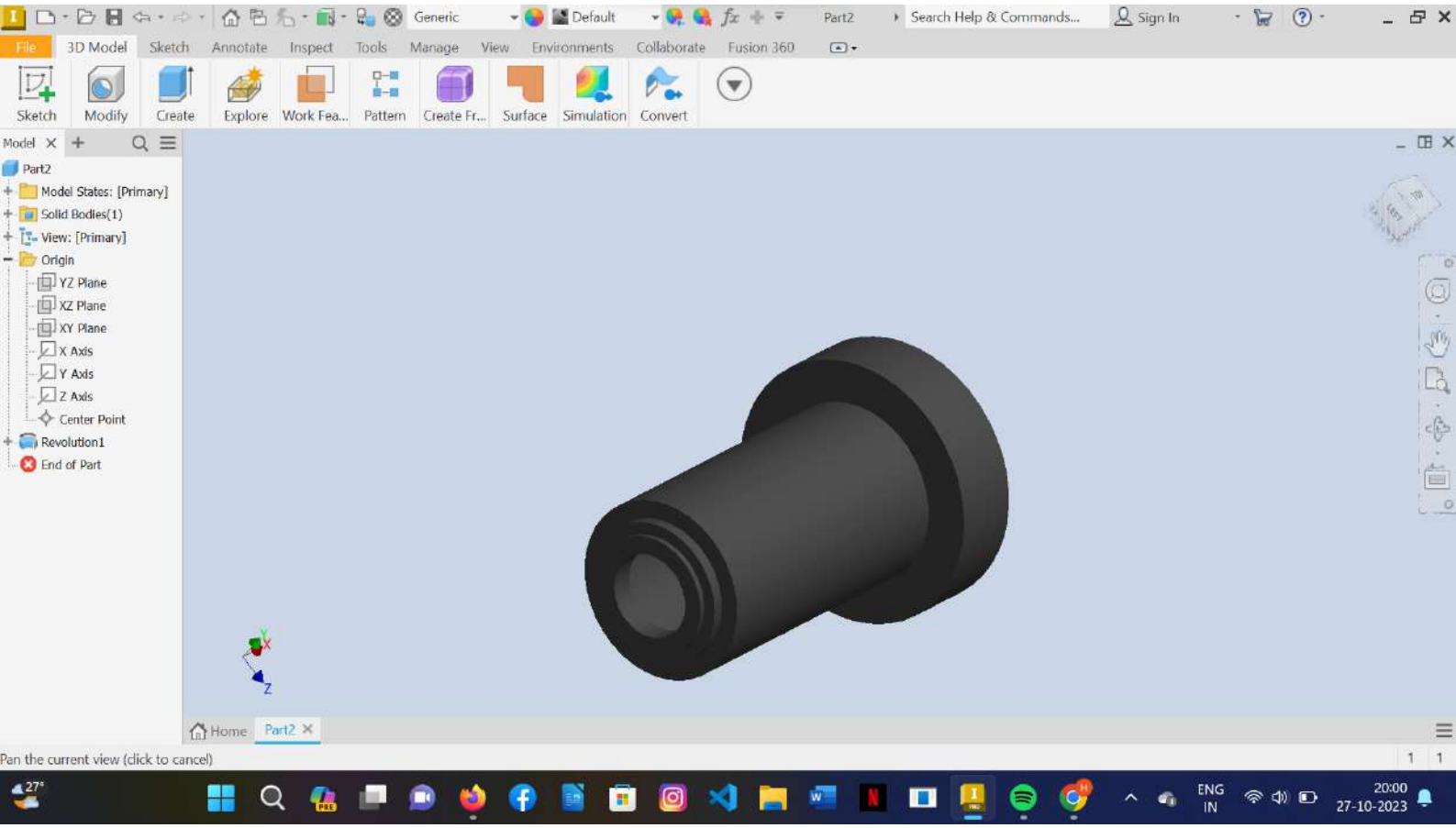
Generic
Default
Part2
Search Help & Commands...
Sign In
File
3D Model
Sketch
Annotate
Inspect
Tools
Manage
View
Environments
Collaborate
Fusion 360
Sketch
Modify
Create
Explore
Work Fea...
Pattern
Create Fr...
Surface
Simulation
Convert
Model
Part2
Model States: [Primary]
Solid Bodies(1)
View: [Primary]
Origin
YZ Plane
XZ Plane
XY Plane
X Axis
Y Axis
Z Axis
Center Point
Revolution1
End of Part
Home
Part2
Pan the current view (click to cancel)
27°
ENG
IN
20:00
27-10-2023

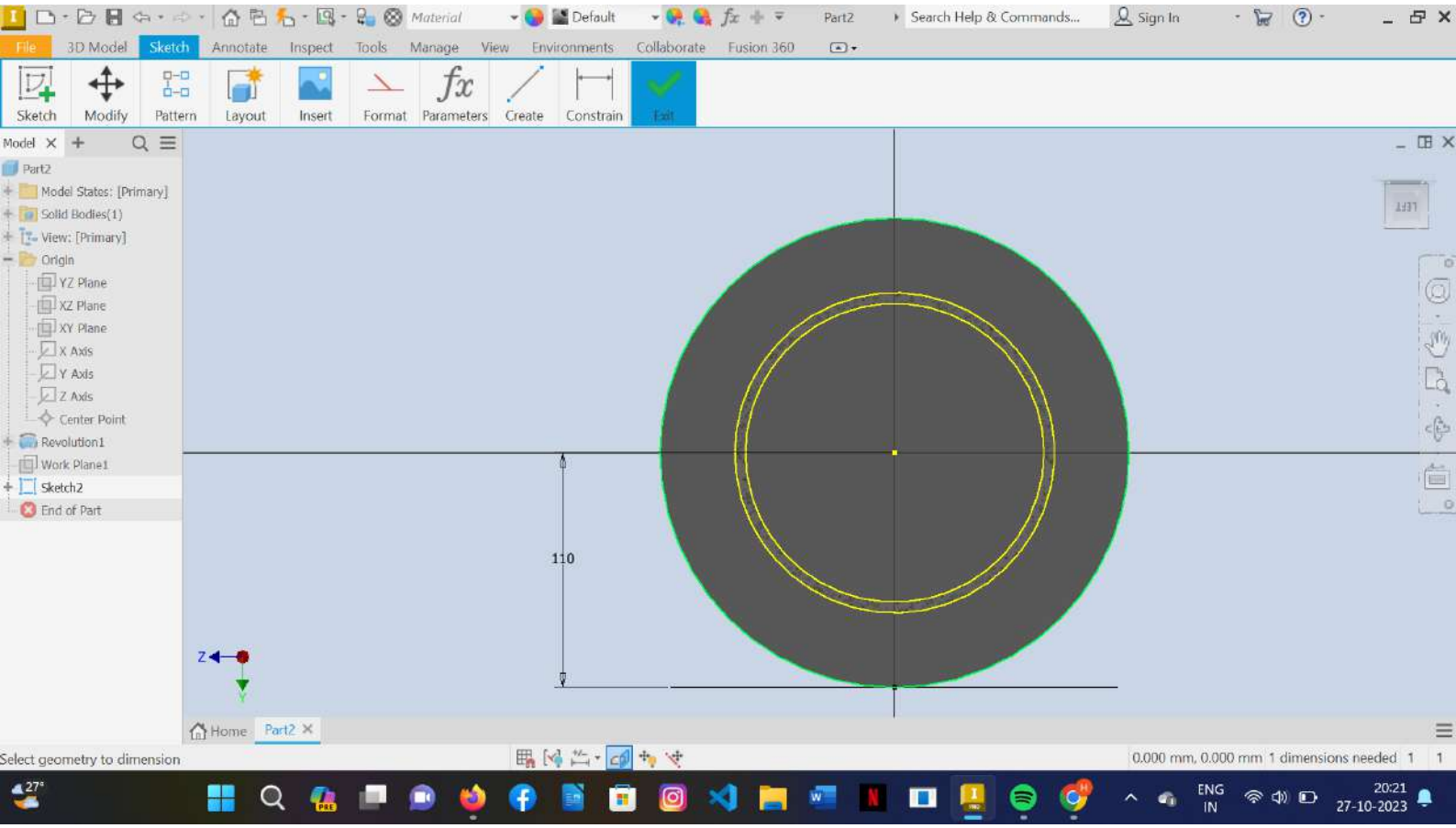
Material
Default
Part2
Search Help & Commands...
Sign In
File
3D Model
Sketch
Annotate
Inspect
Tools
Manage
View
Environments
Collaborate
Fusion 360
Sketch
Modify
Pattern
Layout
Insert
Format
Parameters
Create
Constrain
Exit
Model
Part2
Model States: [Primary]
Solid Bodies(1)
View: [Primary]
Origin
YZ Plane
XZ Plane
XY Plane
X Axis
Y Axis
Z Axis
Center Point
Revolution1
Work Plane1
Sketch2
End of Part
110
Z
Y
Home
Part2
Select geometry to dimension
0.000 mm, 0.000 mm 1 dimensions needed 1 1
27°
ENG
IN
20:21
27-10-2023

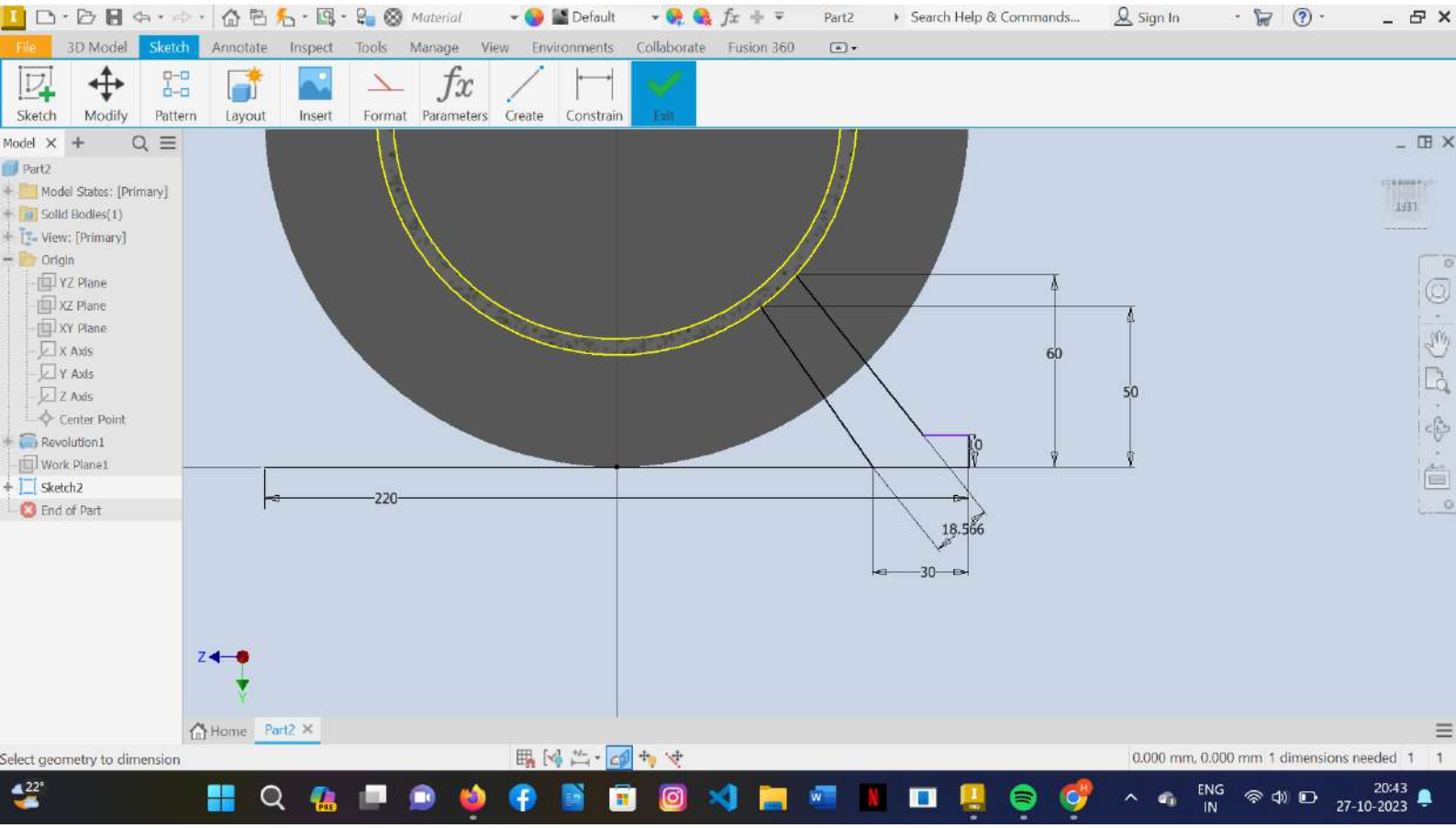
File
3D Model
Sketch
Annotate
Inspect
Tools
Manage
View
Environments
Collaborate
Fusion 360
Sketch
Modify
Pattern
Layout
Insert
Format
Parameters
Create
Constrain
Exit
Model
Part2
Model States: [Primary]
Solid Bodies(1)
View: [Primary]
Origin
YZ Plane
XZ Plane
XY Plane
X Axis
Y Axis
Z Axis
Center Point
Revolution1
Work Plane1
Sketch2
End of Part
60
50
10
220
18.566
30
Home
Part2
Select geometry to dimension
0.000 mm, 0.000 mm 1 dimensions needed

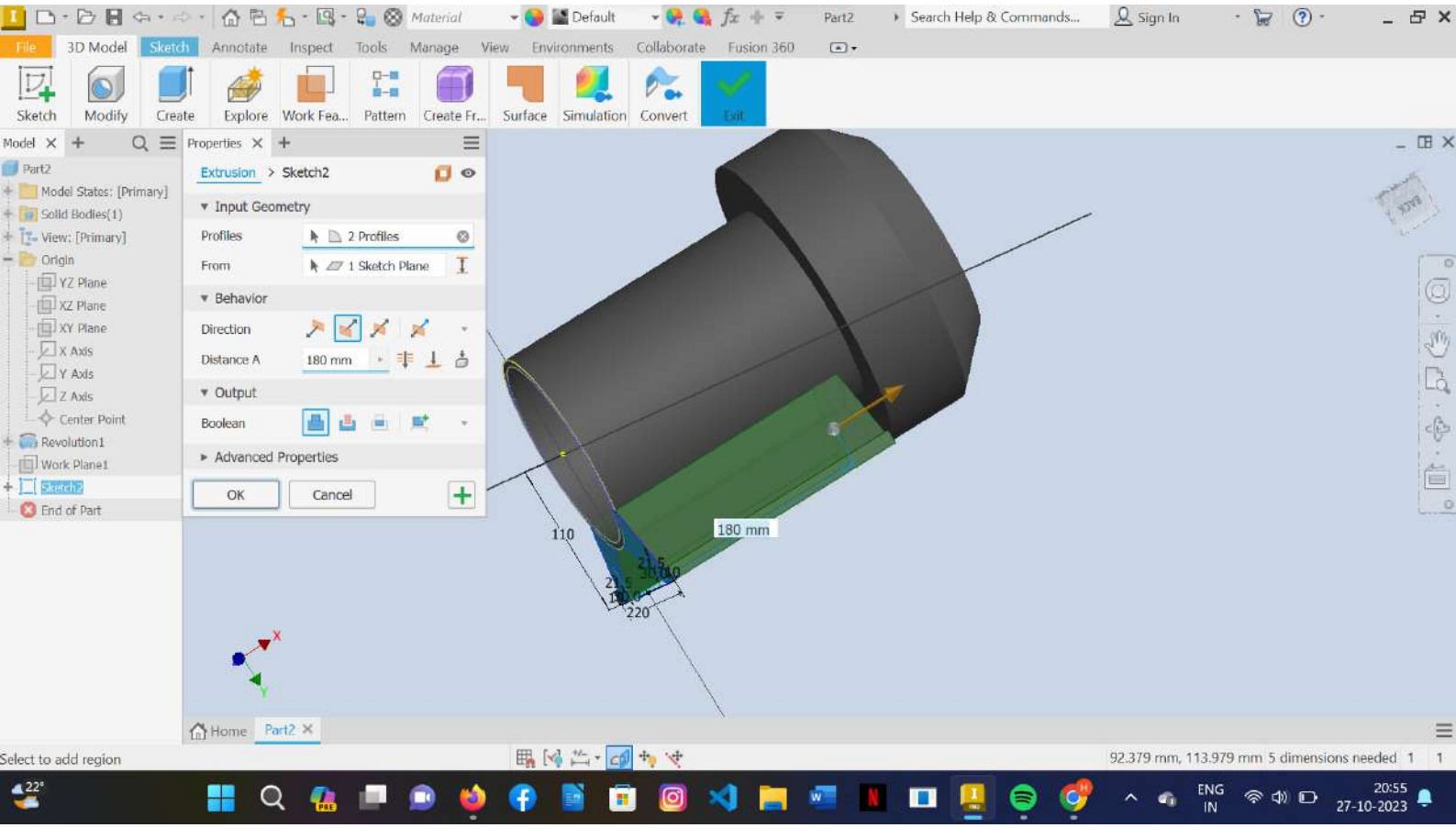
Material
Default
Part2
Search Help & Commands...
Sign In
File
3D Model
Sketch
Annotate
Inspect
Tools
Manage
View
Environments
Collaborate
Fusion 360
Sketch
Modify
Create
Explore
Work Fea...
Pattern
Create Fr...
Surface
Simulation
Convert
Exit
Model
Part2
Model States: [Primary]
Solid Bodies(1)
View: [Primary]
Origin
YZ Plane
XZ Plane
XY Plane
X Axis
Y Axis
Z Axis
Center Point
Revolution1
Work Plane1
Sketch2
End of Part
Properties
Extrusion > Sketch2
Input Geometry
Profiles
2 Profiles
From
1 Sketch Plane
Behavior
Direction
Distance A
180 mm
Output
Boolean
Advanced Properties
OK
Cancel
110
180 mm
220
Home
Part2
Select to add region
92.379 mm, 113.979 mm 5 dimensions needed 1 1
22°
ENG
IN
20:55
27-10-2023

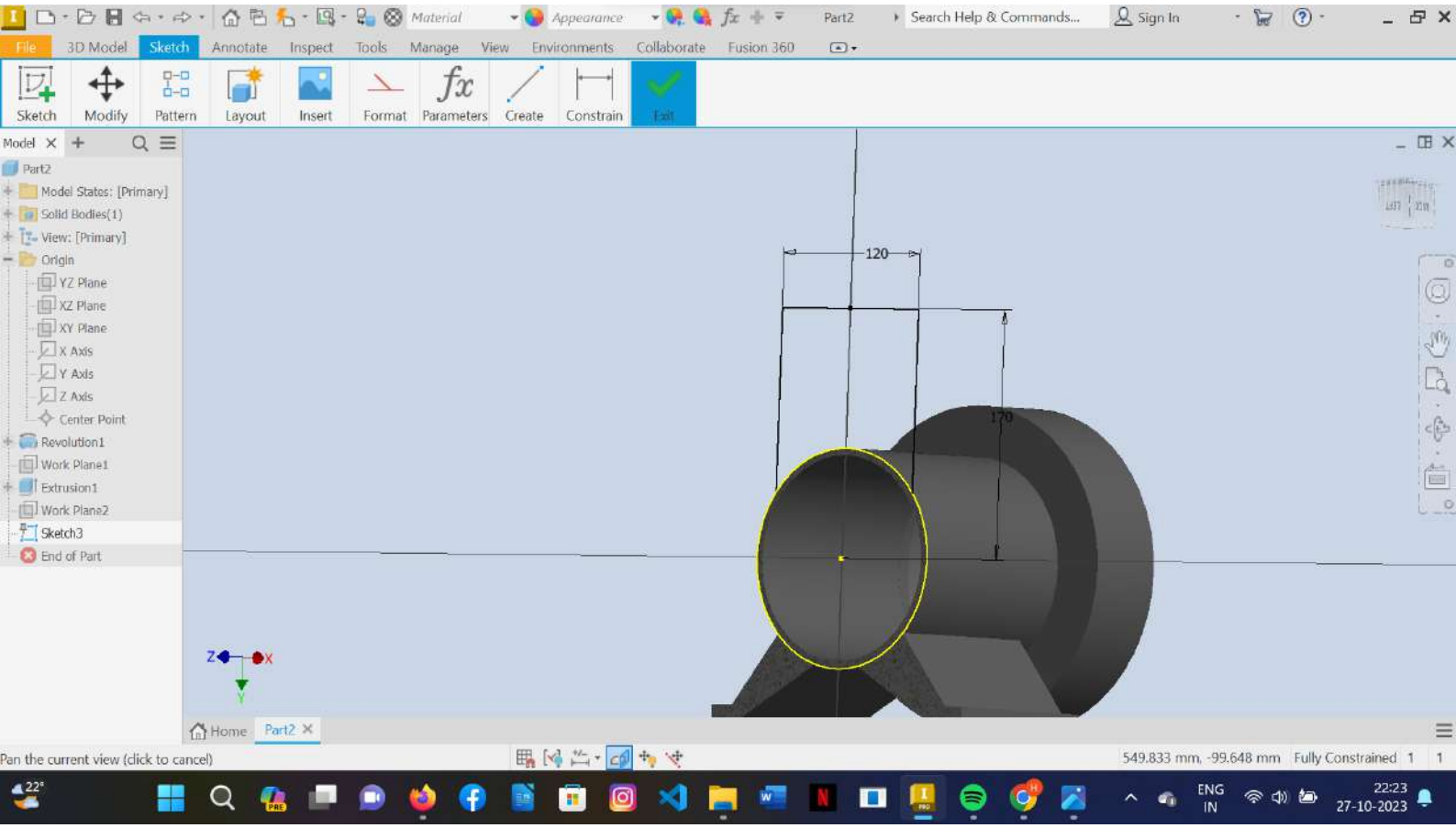
File
3D Model
Sketch
Annotate
Inspect
Tools
Manage
View
Environments
Collaborate
Fusion 360
Sketch
Modify
Pattern
Layout
Insert
Format
Parameters
Create
Constrain
Exit
Model
Part2
Model States: [Primary]
Solid Bodies(1)
View: [Primary]
Origin
YZ Plane
XZ Plane
XY Plane
X Axis
Y Axis
Z Axis
Center Point
Revolution1
Work Plane1
Extrusion1
Work Plane2
Sketch3
End of Part
120
170
Home
Part2
Pan the current view (click to cancel)
549.833 mm, -99.648 mm
Fully Constrained
ENG
IN
22:23
27-10-2023

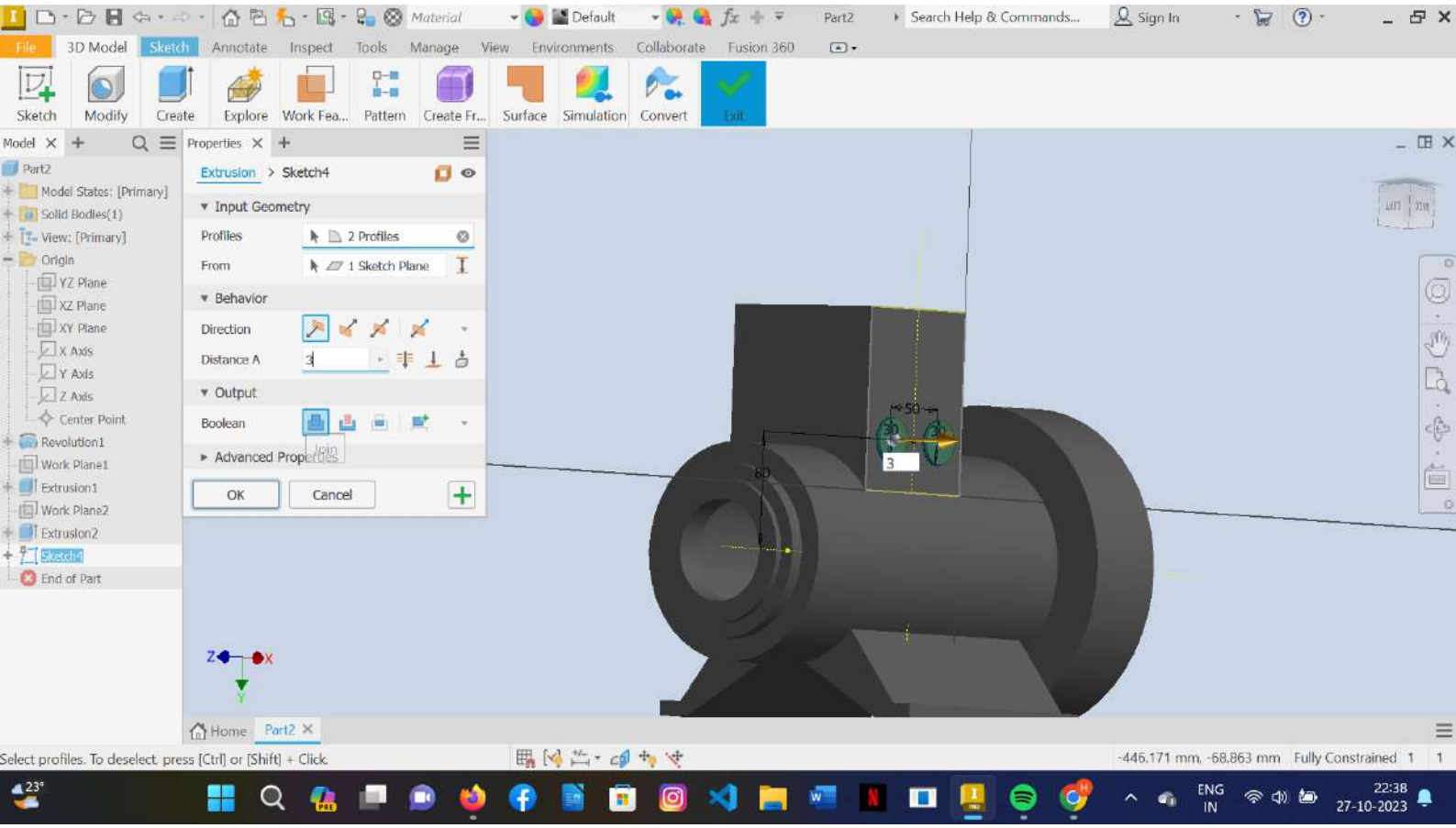
Material
Default
Part2
Search Help & Commands...
Sign In
File
3D Model
Sketch
Annotate
Inspect
Tools
Manage
View
Environments
Collaborate
Fusion 360
Sketch
Modify
Create
Explore
Work Fea...
Pattern
Create Fr...
Surface
Simulation
Convert
Exit
Model
Part2
Model States: [Primary]
Solid Bodies(1)
View: [Primary]
Origin
YZ Plane
XZ Plane
XY Plane
X Axis
Y Axis
Z Axis
Center Point
Revolution1
Work Plane1
Extrusion1
Work Plane2
Extrusion2
Sketch4
End of Part
Properties
Extrusion > Sketch4
Input Geometry
Profiles
2 Profiles
From
1 Sketch Plane
Behavior
Direction
Distance A
3
Output
Boolean
Join
Advanced Properties
OK
Cancel
50
30
30
3
80
Z
X
Y
Home
Part2
Select profiles. To deselect, press [Ctrl] or [Shift] + Click.
-446.171 mm, -68.863 mm
Fully Constrained
ENG
IN
22:38
27-10-2023

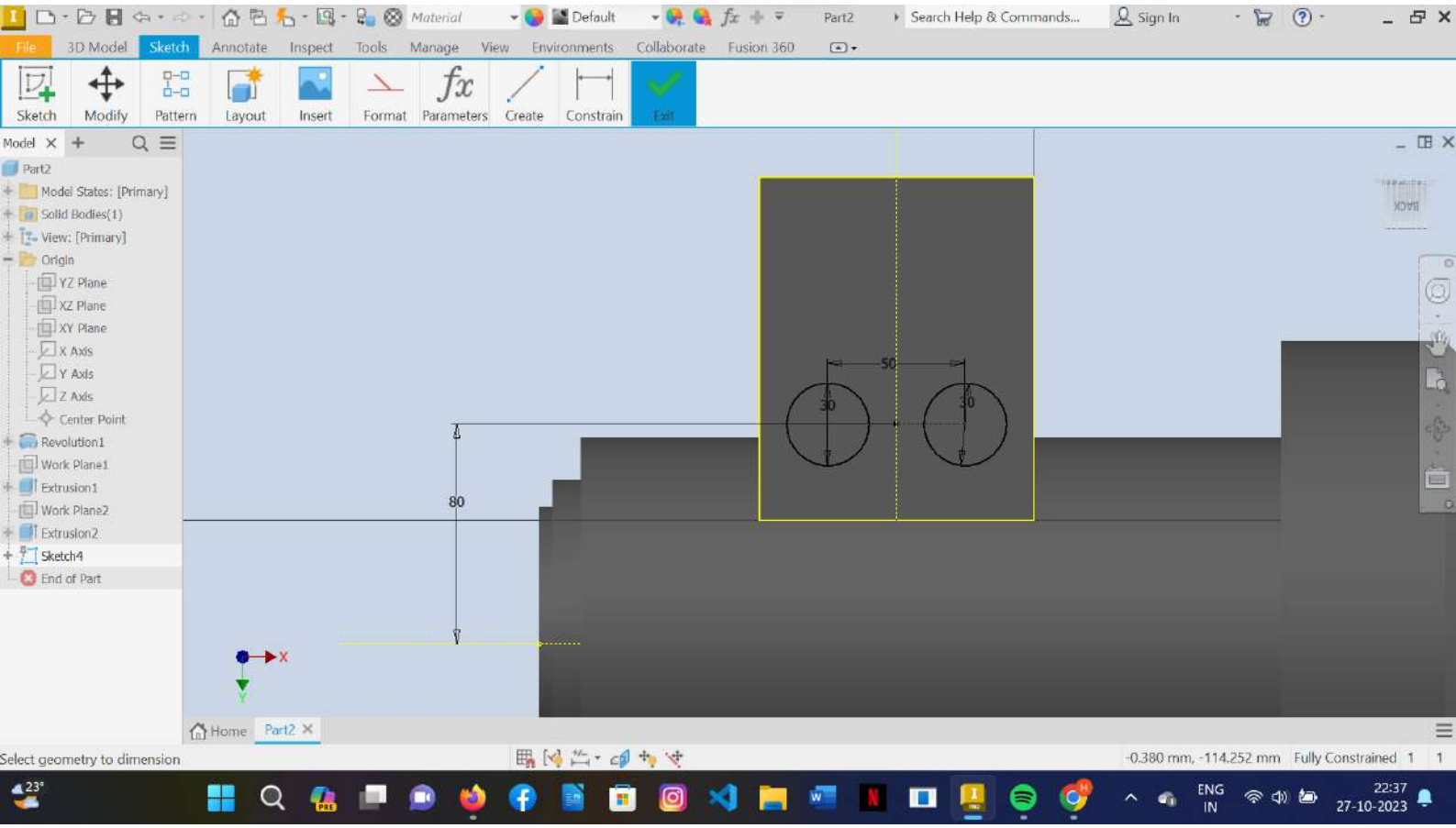
Material
Default
Part2
Search Help & Commands...
Sign In
File
3D Model
Sketch
Annotate
Inspect
Tools
Manage
View
Environments
Collaborate
Fusion 360
Sketch
Modify
Pattern
Layout
Insert
Format
Parameters
Create
Constrain
Exit
Model
Part2
Model States: [Primary]
Solid Bodies(1)
View: [Primary]
Origin
YZ Plane
XZ Plane
XY Plane
X Axis
Y Axis
Z Axis
Center Point
Revolution1
Work Plane1
Extrusion1
Work Plane2
Extrusion2
Sketch4
End of Part
50
30
30
80
X
Y
Home
Part2
Select geometry to dimension
-0.380 mm, -114.252 mm
Fully Constrained
1
1
23°
ENG
IN
22:37
27-10-2023

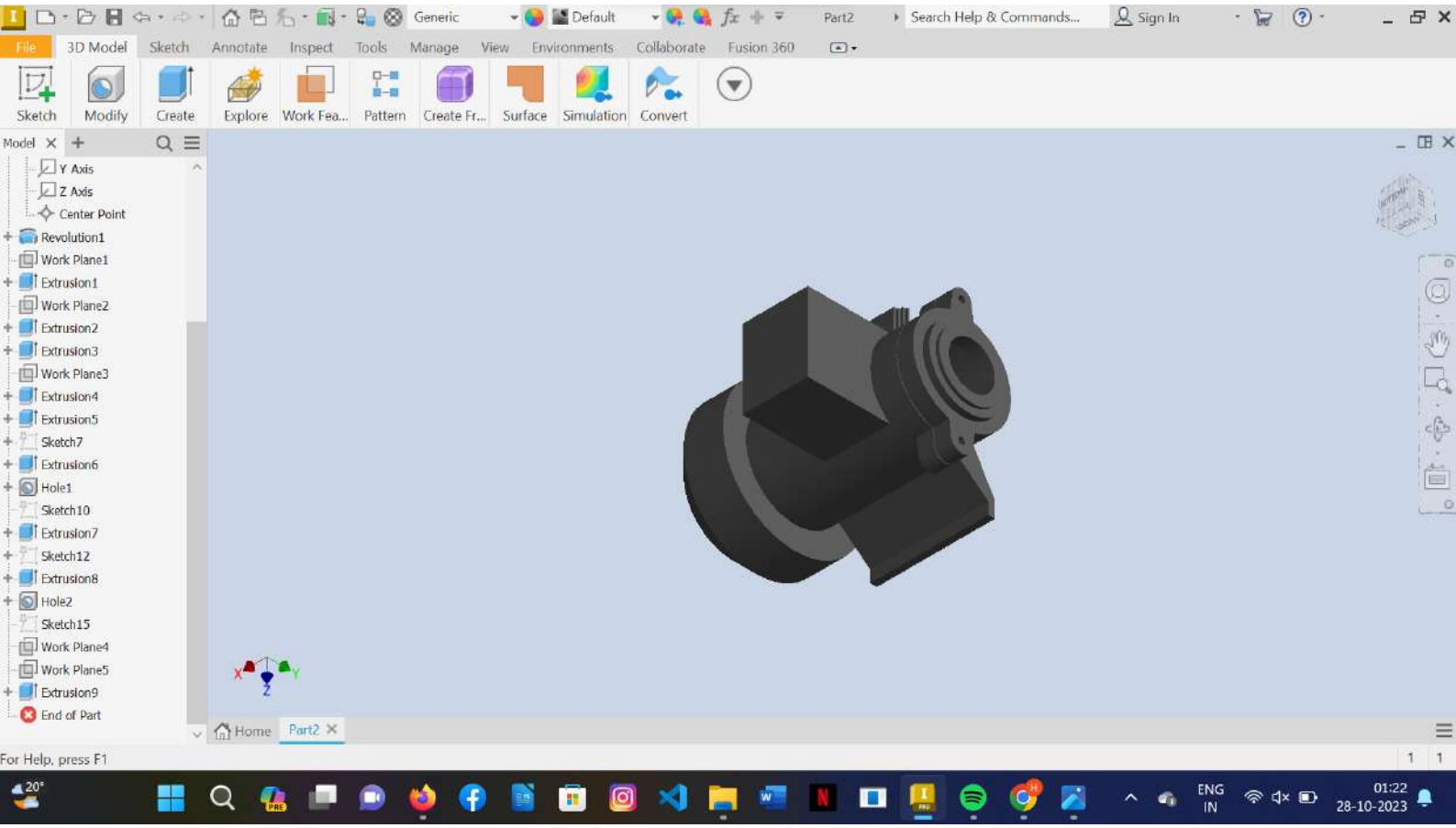
Generic
Default
Part2
Search Help & Commands...
Sign In
File
3D Model
Sketch
Annotate
Inspect
Tools
Manage
View
Environments
Collaborate
Fusion 360
Sketch
Modify
Create
Explore
Work Fea...
Pattern
Create Fr...
Surface
Simulation
Convert
Model
Y Axis
Z Axis
Center Point
Revolution1
Work Plane1
Extrusion1
Work Plane2
Extrusion2
Extrusion3
Work Plane3
Extrusion4
Extrusion5
Sketch7
Extrusion6
Hole1
Sketch10
Extrusion7
Sketch12
Extrusion8
Hole2
Sketch15
Work Plane4
Work Plane5
Extrusion9
End of Part
Home
Part2
For Help, press F1
ENG
IN
01:22
28-10-2023

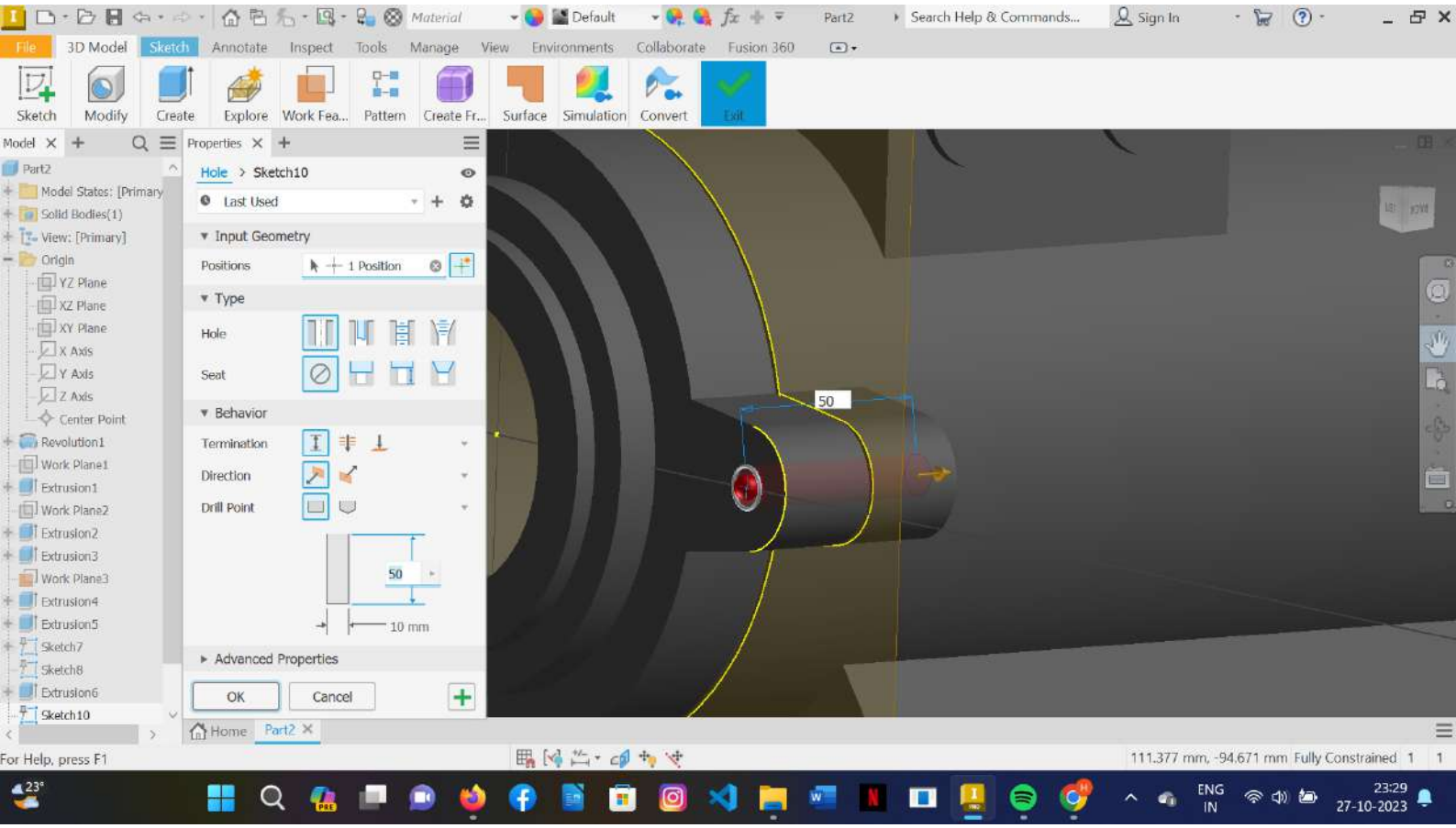
Material
Default
Part2
Search Help & Commands...
Sign In
File
3D Model
Sketch
Annotate
Inspect
Tools
Manage
View
Environments
Collaborate
Fusion 360
Sketch
Modify
Create
Explore
Work Fea...
Pattern
Create Fr...
Surface
Simulation
Convert
Exit
Model
Part2
Model States: [Primary
Solid Bodies(1)
View: [Primary]
Origin
YZ Plane
XZ Plane
XY Plane
X Axis
Y Axis
Z Axis
Center Point
Revolution1
Work Plane1
Extrusion1
Work Plane2
Extrusion2
Extrusion3
Work Plane3
Extrusion4
Extrusion5
Sketch7
Sketch8
Extrusion6
Sketch10
Properties
Hole > Sketch10
Last Used
Input Geometry
Positions
1 Position
Type
Hole
Seat
Behavior
Termination
Direction
Drill Point
50
10 mm
Advanced Properties
OK
Cancel
50
Home
Part2
For Help, press F1
111.377 mm, -94.671 mm Fully Constrained 1 1
23°
ENG
IN
23:29
27-10-2023

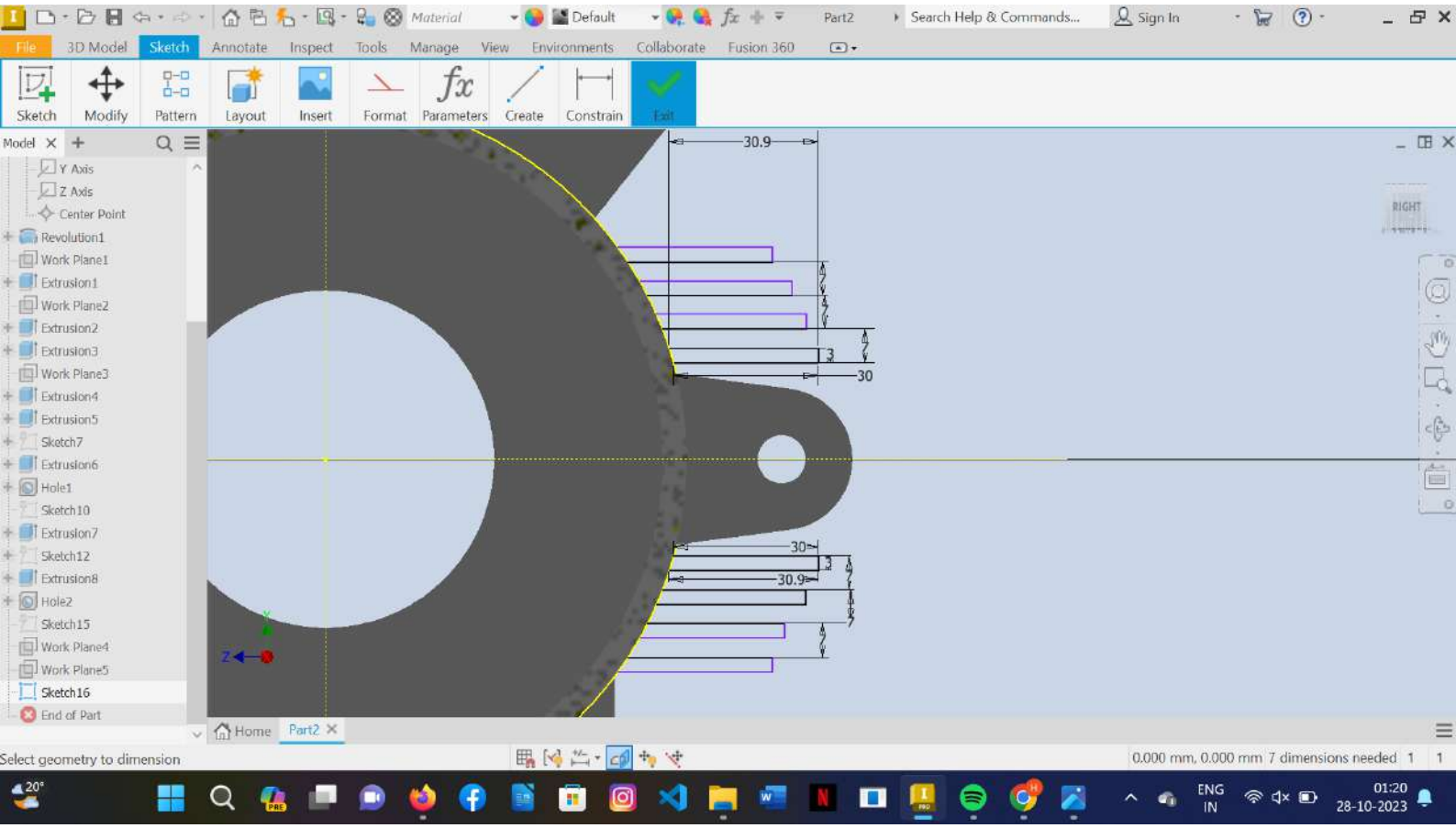
File
3D Model
Sketch
Annotate
Inspect
Tools
Manage
View
Environments
Collaborate
Fusion 360
Sketch
Modify
Pattern
Layout
Insert
Format
Parameters
Create
Constrain
Exit
Model
Y Axis
Z Axis
Center Point
Revolution1
Work Plane1
Extrusion1
Work Plane2
Extrusion2
Extrusion3
Work Plane3
Extrusion4
Extrusion5
Sketch7
Extrusion6
Hole1
Sketch10
Extrusion7
Sketch12
Extrusion8
Hole2
Sketch15
Work Plane4
Work Plane5
Sketch16
End of Part
30.9
3
30
30
3
30.9
Home
Part2
Select geometry to dimension
0.000 mm, 0.000 mm 7 dimensions needed

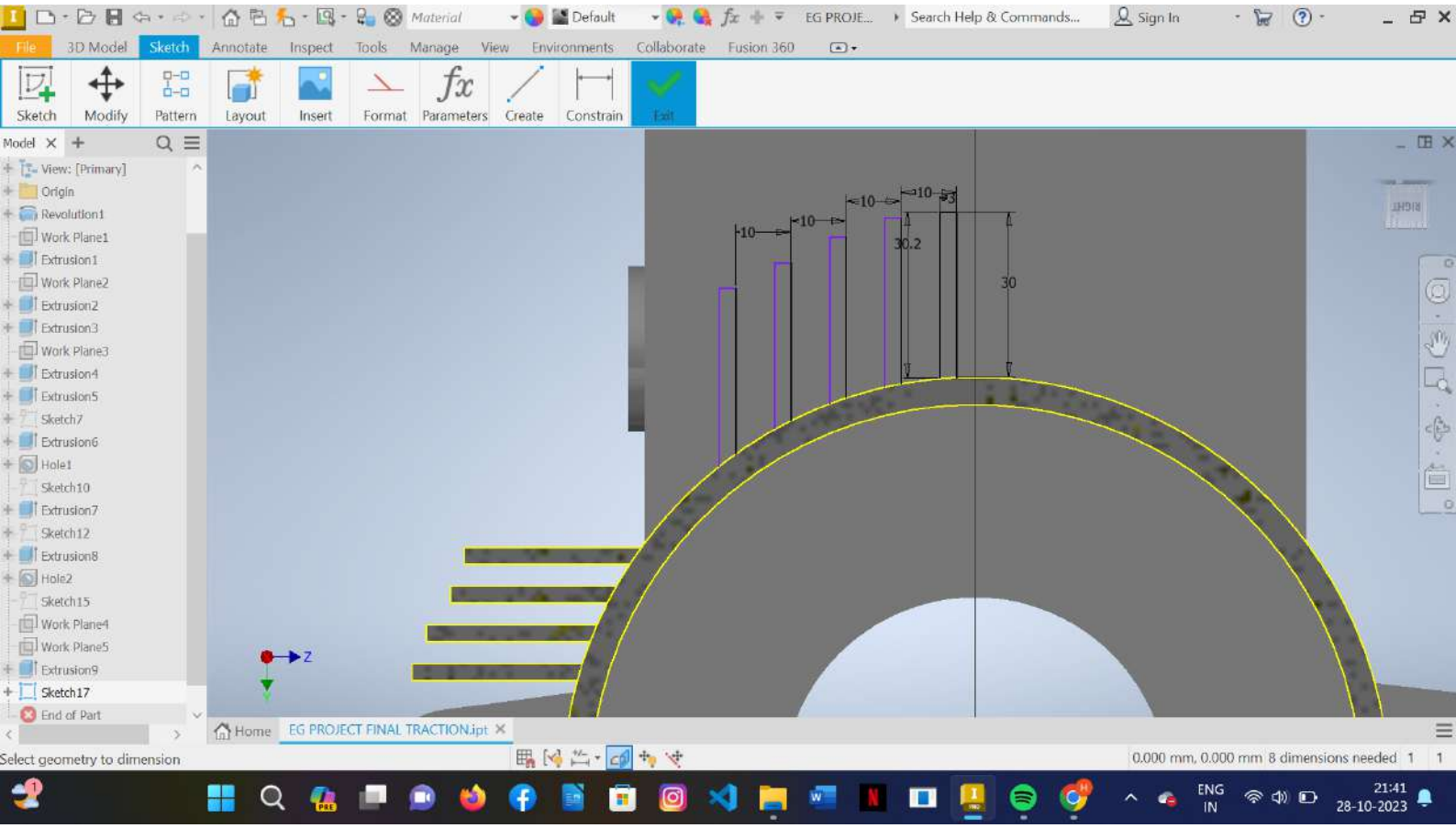
Material
Default
EG PROJE...
Search Help & Commands...
Sign In
File
3D Model
Sketch
Annotate
Inspect
Tools
Manage
View
Environments
Collaborate
Fusion 360
Sketch
Modify
Pattern
Layout
Insert
Format
Parameters
Create
Constrain
Exit
Model
View: [Primary]
Origin
Revolution1
Work Plane1
Extrusion1
Work Plane2
Extrusion2
Extrusion3
Work Plane3
Extrusion4
Extrusion5
Sketch7
Extrusion6
Hole1
Sketch10
Extrusion7
Sketch12
Extrusion8
Hole2
Sketch15
Work Plane4
Work Plane5
Extrusion9
Sketch17
End of Part
10
10
10
10
3
30.2
30
Z
Home
EG PROJECT FINAL TRACTION.ipt
Select geometry to dimension
0.000 mm, 0.000 mm 8 dimensions needed
ENG
IN
21:41
28-10-2023

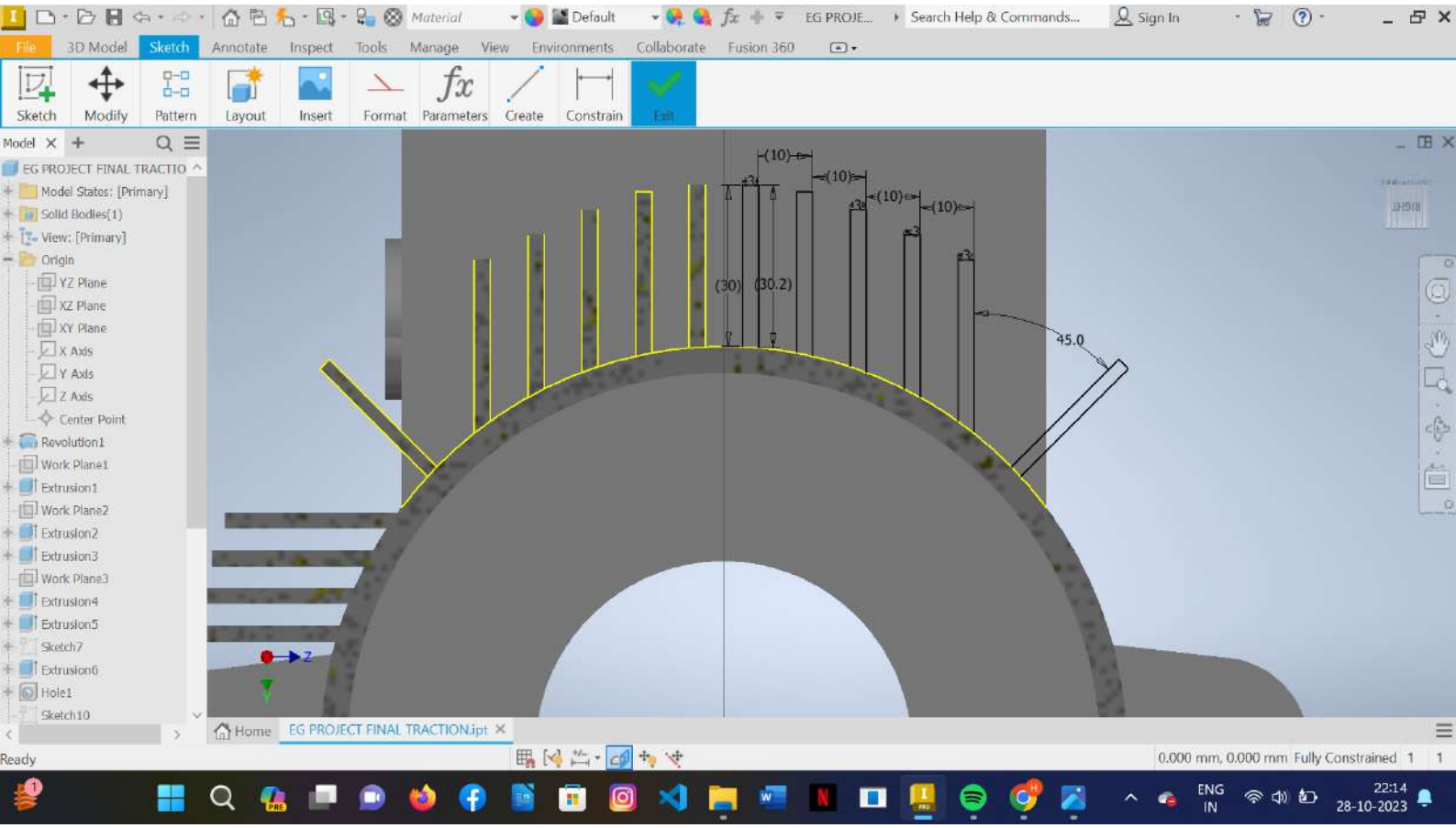
File
3D Model
Sketch
Annotate
Inspect
Tools
Manage
View
Environments
Collaborate
Fusion 360
Sketch
Modify
Pattern
Layout
Insert
Format
Parameters
Create
Constrain
Exit
Model
EG PROJECT FINAL TRACTIO
Model States: [Primary]
Solid Bodies(1)
View: [Primary]
Origin
YZ Plane
XZ Plane
XY Plane
X Axis
Y Axis
Z Axis
Center Point
Revolution1
Work Plane1
Extrusion1
Work Plane2
Extrusion2
Extrusion3
Work Plane3
Extrusion4
Extrusion5
Sketch7
Extrusion6
Hole1
Sketch10
(10)
(10)
(10)
(10)
(30)
(30.2)
45.0
Home
EG PROJECT FINAL TRACTION.ipt
Ready
0.000 mm, 0.000 mm Fully Constrained
ENG
IN
22:14
28-10-2023

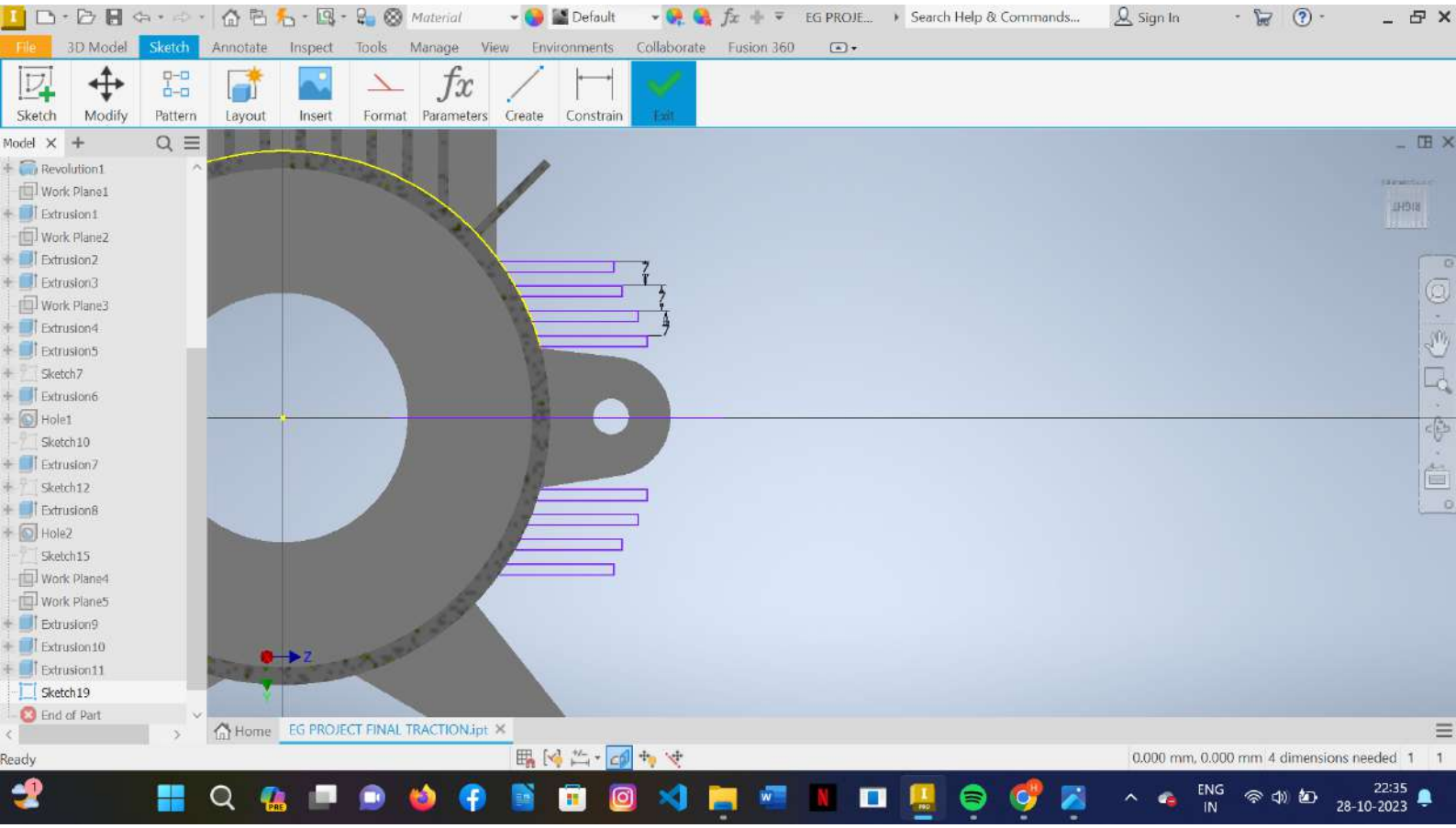
File
3D Model
Sketch
Annotate
Inspect
Tools
Manage
View
Environments
Collaborate
Fusion 360
Sketch
Modify
Pattern
Layout
Insert
Format
Parameters
Create
Constrain
Exit
Model
Revolution1
Work Plane1
Extrusion1
Work Plane2
Extrusion2
Extrusion3
Work Plane3
Extrusion4
Extrusion5
Sketch7
Extrusion6
Hole1
Sketch10
Extrusion7
Sketch12
Extrusion8
Hole2
Sketch15
Work Plane4
Work Plane5
Extrusion9
Extrusion10
Extrusion11
Sketch19
End of Part
Home
EG PROJECT FINAL TRACTION.ipt
Ready
0.000 mm, 0.000 mm 4 dimensions needed
ENG
IN
22:35
28-10-2023

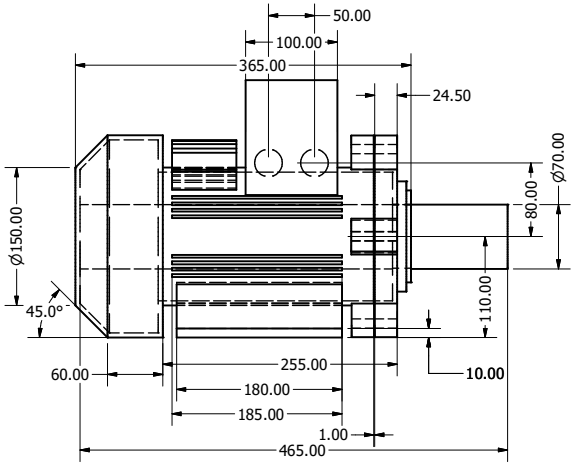

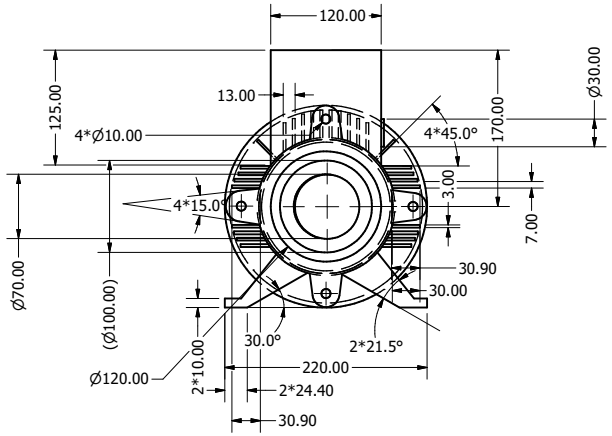

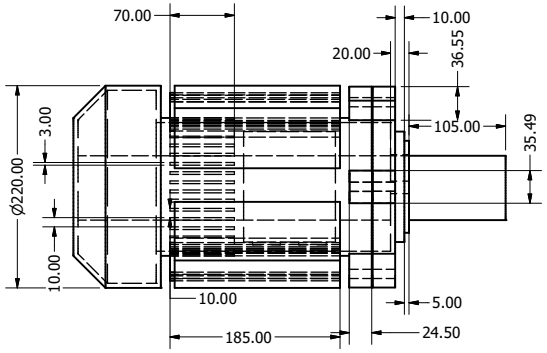

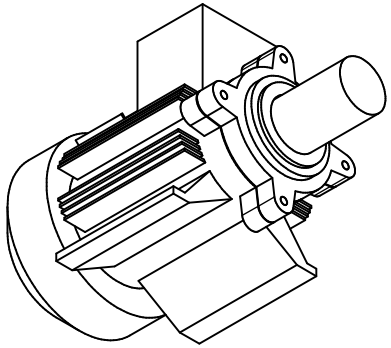

DRAWN Lenovo-pc	14-11-2023	
CHECKED		TITLE
QA		
MFG		
APPROVED		
		SIZE C / DWG NO EG PROJECT FINAL TRACTION / REV
		SCALE 1 / 4 / SHEET 1 OF 1

projections