Istanbul Technical University

Faculty of Electrical and Electronics Engineering

Design of an MCU-Controlled Multi-Band PLL-Based RF Signal Generation and Filtering System

Supervisor: Prof. Dr. Mehmet ÇAYÖREN

Author: Hasan Emre AYDEMİR

The aim of this project is to generate RF signals at different center frequencies using a microcontroller (MCU)-controlled PLL-VCO structure and to obtain a clean output signal through a selected band-pass filter (BPF) via an RF switch.

The system provides a modular RF front-end architecture capable of digitally controlling both frequency synthesis and band selection.

1. SYSTEM ARCHITECTURE

The system consists of the following main blocks:

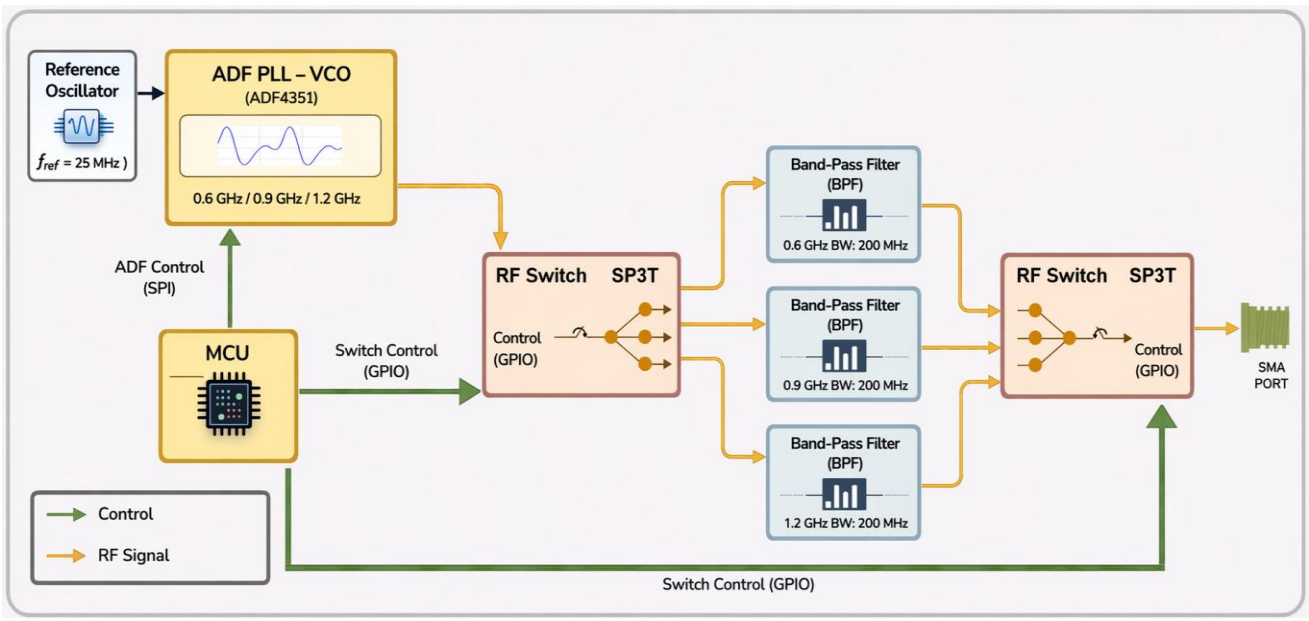

Figure 1. System Block Diagram

MCU (Microcontroller Unit)

- Configures the PLL frequency via SPI
- Programs the VCO output frequency
- Controls the RF switch using GPIO pins
- Determines which frequency band is active

PLL (Phase-Locked Loop)

- Receives a stable reference frequency from a crystal oscillator
- Locks the VCO to generate a stable RF signal
- Provides frequency stability and low phase noise

VCO (Voltage-Controlled Oscillator)

- Generates RF signals at frequencies programmed by the MCU
- Selected center frequencies:
  - **0.6 GHz**
  - **0.9 GHz**
  - **1.2 GHz**

Output power: ~5 dBm

RF Switch (SP3T)

- Controlled by the MCU via GPIO pins
- Routes the generated RF signal to the corresponding BPF path
- Enables multi-band operation

LC Band-Pass Filters (BPF)

Filter	Center Frequency (f_0)	Bandwidth (BW)
BPF-1	0.6 GHz	200 MHz
BPF-2	0.9 GHz	200 MHz
BPF-3	1.2 GHz	200 MHz

2. TARGETED BPF NUMERICAL CALCULATIONS

2.1. Series Branch (L1–C1 and L3–C3) Synthesis Equations

$R_0 = 50\ \Omega$

BW = 200 MHz

Butterworth N=3 için $g_1 = g_3 = 1$

$w_0 = 2\pi f_0$

$FBW = BW / f_0$

$L_s = R_0\, g_k / (w_0\, FBW)$

$C_s = (FBW\, g_k) / (R_0\, w_0)$

2.2. Parallel Branch (L2–C2) Resonance Verification

In this project, the middle branch (L2–C2) may not behave exactly like a prototype "shunt C" transformation in the selected topology.

Therefore, the resonance condition can be used as a practical verification for the parallel branch:

$f_0 = 1 / (2\pi \sqrt{(L_2 C_2)})$

❖ Calculations for 0.6 GHz

Series Branch:

$f_0 = 600$ MHz

FBW = 200 / 600 = 0.333

$w_0 = 2\pi \times 600\times10^6$

$L_s = 50 / (2\pi \times 200\times10^6) = 39.79$ nH

$C_s = 200\times10^6 / (50 \times 2\pi \times (600\times10^6)^2) = 1.768$ pF

Result: L1 = L3 = 39.79 nH, C1 = C3 = 1.768 pF

Parallel Branch:

$L_2 = 2.21$ nH, $C_2 = 31.83$ pF

$f_0 (L_2, C_2) = 1 / (2\pi \sqrt{(L_2 C_2)})$

$= 1 / (2\pi \sqrt{(2.21\times10^{-9} \cdot 31.83\times10^{-12})})$

≈ 600.08 MHz

The obtained value is very close to the target f_0; therefore, the resonance of the parallel branch occurs at the correct frequency.

❖ Calculations for 0.9 GHz

Series Branch:

$f_0 = 900$ MHz

FBW = 200 / 900 = 0.222

$w_0 = 2\pi \times 900\times10^6$

$L_s = 50 / (2\pi \times 200\times10^6) = 39.79$ nH

$C_s = 200\times10^6 / (50 \times 2\pi \times (900\times10^6)^2) = 0.786$ pF

Result: L1 = L3 = 39.79 nH, C1 = C3 = 0.786 pF

Parallel Branch:

$L_2 = 0.982$ nH, $C_2 = 31.83$ pF

$f_0 (L_2, C_2) = 1 / (2\pi \sqrt{(L_2 C_2)})$

$= 1 / (2\pi \sqrt{(0.982\times10^{-9} \cdot 31.83\times10^{-12})})$

≈ 900.21 MHz

The calculated value is very close to the target f_0, indicating that the parallel branch resonates at the desired frequency.

❖ Calculations for 1.2 GHz

Series Branch:

$f_0 = 1200$ MHz

FBW = 200 / 1200 = 0.1667

$w_0 = 2\pi \times 1200\times10^6$

$L_s = 50 / (2\pi \times 200\times10^6) = 39.79$ nH

$C_s = 200\times10^6 / (50 \times 2\pi \times (1200\times10^6)^2) = 0.442$ pF

Result: L1 = L3 = 39.79 nH, C1 = C3 = 0.442 pF

Parallel Branch:

$L_2 = 0.553$ nH, $C_2 = 31.83$ pF

$f_0 (L_2, C_2) = 1 / (2\pi \sqrt{(L_2 C_2)})$

$= 1 / (2\pi \sqrt{(0.553\times10^{-9} \cdot 31.83\times10^{-12})})$

≈ 1199.61 MHz

The calculated value is very close to the target f_0, indicating that the parallel branch resonates at the desired frequency.

Note: Since the bandwidth (BW) is constant, the L_s value remains the same for all three bands. The C_s value, on the other hand, is inversely proportional to f_0^2.

The component values of the band-pass filters (BPFs) designed for center frequencies of 0.6 GHz, 0.9 GHz, and 1.2 GHz were initially obtained using theoretical calculations and closed-form equations. However, some of these values are not available as standard component values in the market. Therefore, the design was adjusted to use standard 0402 SMD component values to ensure compatibility with practical PCB implementation.

Actual components used for the 0.6 GHz BPF:

- L1 = L3 → 39 nH
- C1 = C3 → 1.8 pF
- L2 → 2.2 nH
- C2 → 32 pF

Actual components used for the 0.9 GHz BPF:

- L1 = L3 → 39 nH
- C1 = C3 → 0.82 pF
- L2 → 1.0 nH
- C2 → 32 pF

Actual components used for the 1.2 GHz BPF:

- L1 = L3 → 39 nH
- C1 = C3 → 0.46 pF
- L2 → 0.56 nH
- C2 → 32 pF

2.3. List of Components Used

BPF	Ref	Value	Manufacturer	Series / Part No	Package	Tolerance	Description
0.6 GHz	L1 L3	39 nH	Coilcraft	0402HP-39NXJL	0402	±5%	High-Q RF Inductor
	C1 C3	1.8 pF	Murata	GRM1555C1H1R8CA01	0402	±0.25 pF	C0G/NP0
	L2	2.2 nH	Coilcraft	0402HP-2N2XJL	0402	±5%	High-Q RF Inductor
	C2	32 pF	Murata	GRM1555C1H320JA01	0402	±5%	C0G/NP0
0.9 GHz	L1 L3	39 nH	Coilcraft	0402HP-39NXJL	0402	±5%	High-Q RF Inductor
	C1 C3	0.82 pF	Murata	GRM1555C1H0R82BA01	0402	±0.1 pF	C0G/NP0
	L2	1.0 nH	Coilcraft	0402HP-1N0XJL	0402	±5%	High-Q RF Inductor
	C2	32 pF	Murata	GRM1555C1H320JA01	0402	±5%	C0G/NP0
1.2 GHz	L1 L3	39 nH	Coilcraft	0402HP-39NXJL	0402	±5%	High-Q RF Inductor
	C1 C3	0.47 pF	Murata	GRM1555C1H0R47BA01	0402	±0.1 pF	C0G/NP0
	L2	0.56 nH	Coilcraft	0402HP-R56XJL	0402	±5%	High-Q RF Inductor
	C2	32 pF	Murata	GRM1555C1H320JA01	0402	±5%	C0G/NP0

3. AWR BPF DESIGNS

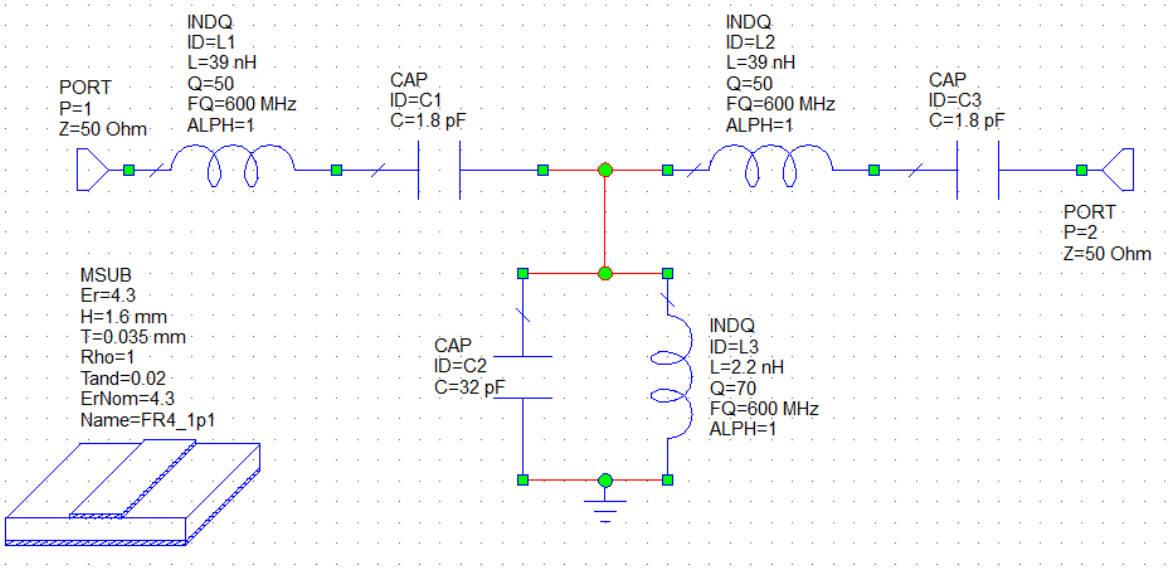

Figure 2. 0.6 GHz BPF

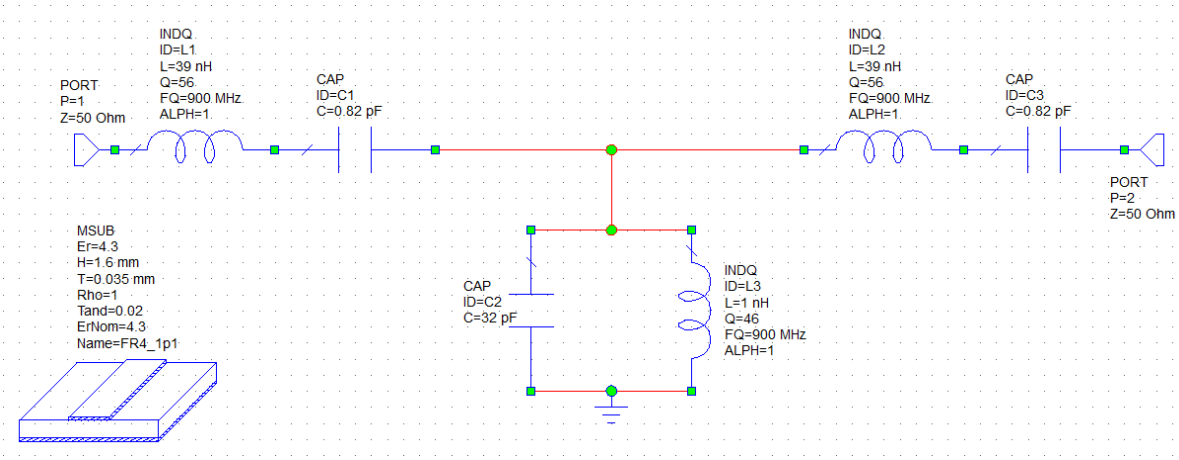

Figure 3. 0.9 GHz BPF

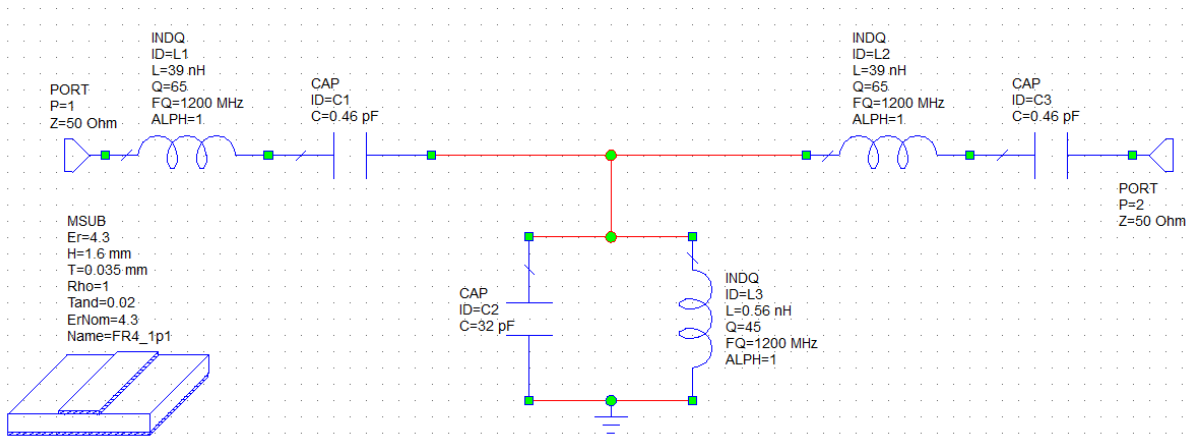

Figure 4. 1.2 GHz BPF

In this study, three LC-based band-pass filters operating at center frequencies of 0.6 GHz, 0.9 GHz, and 1.2 GHz were designed and simulated in the AWR environment.All filters were designed for a 50 Ω system impedance.

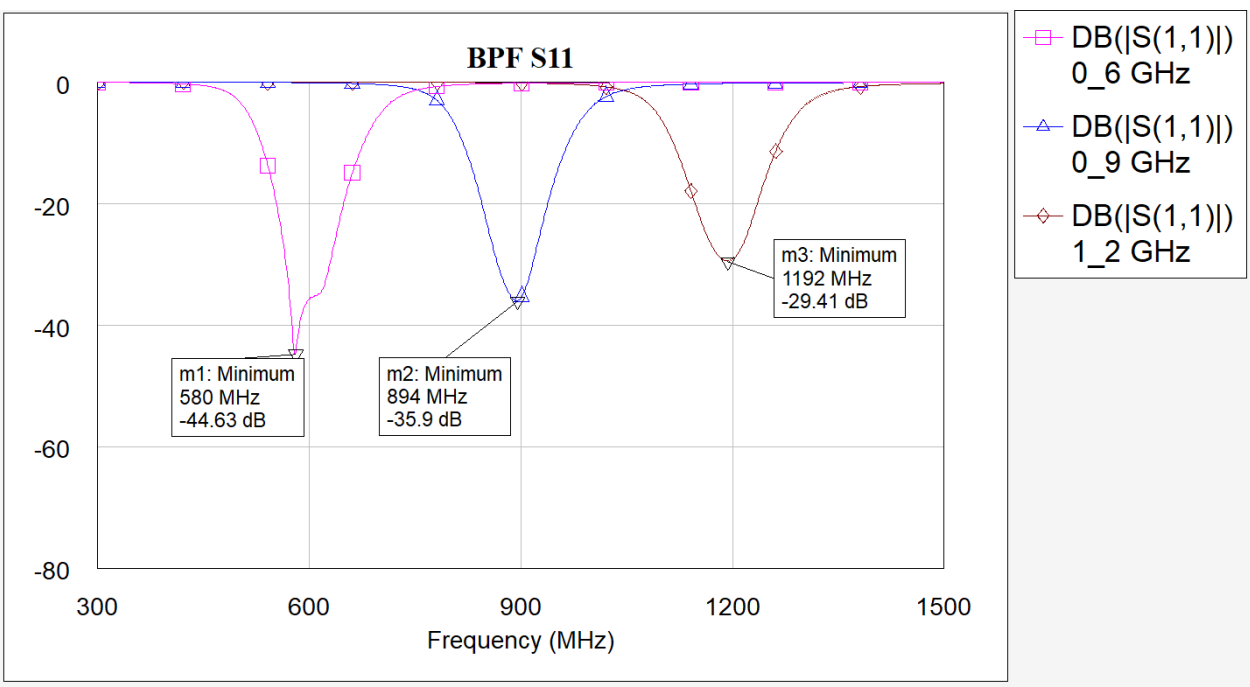

Figure 5. S11 Return Loss

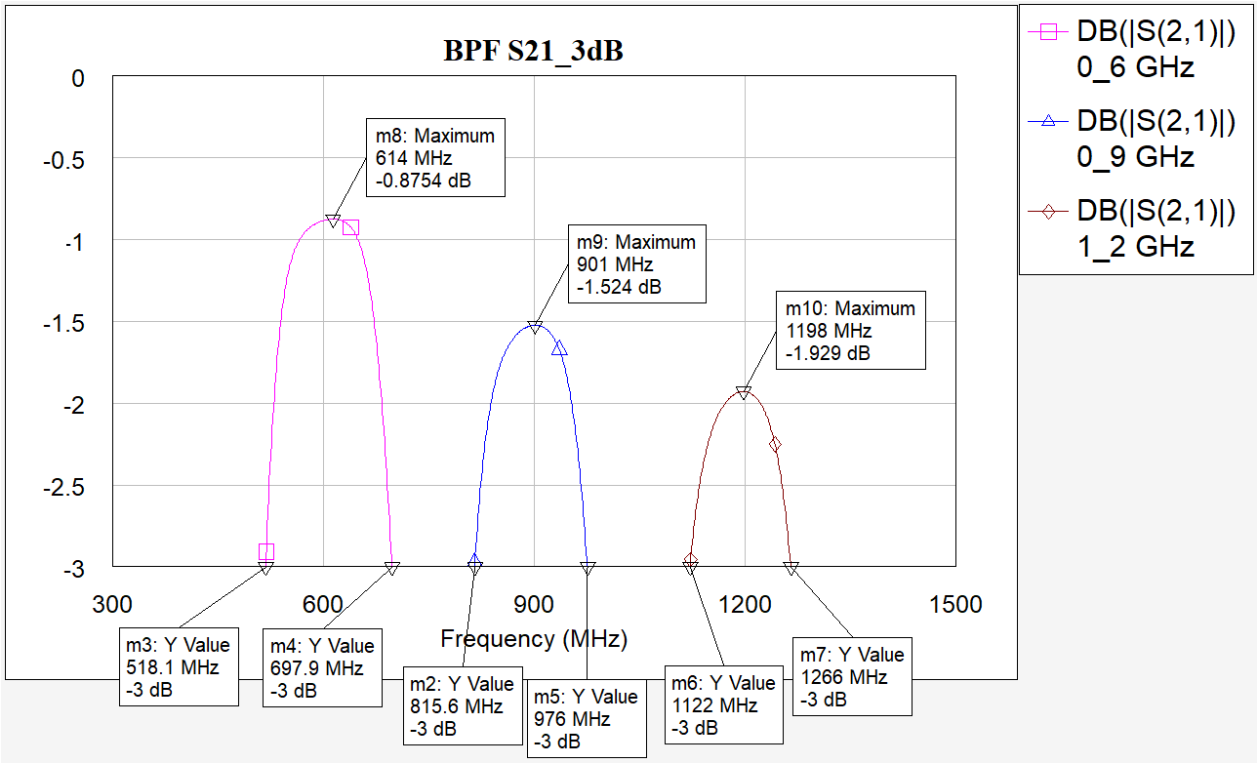

Figure 6. S21 Insertion Loss (3dB)

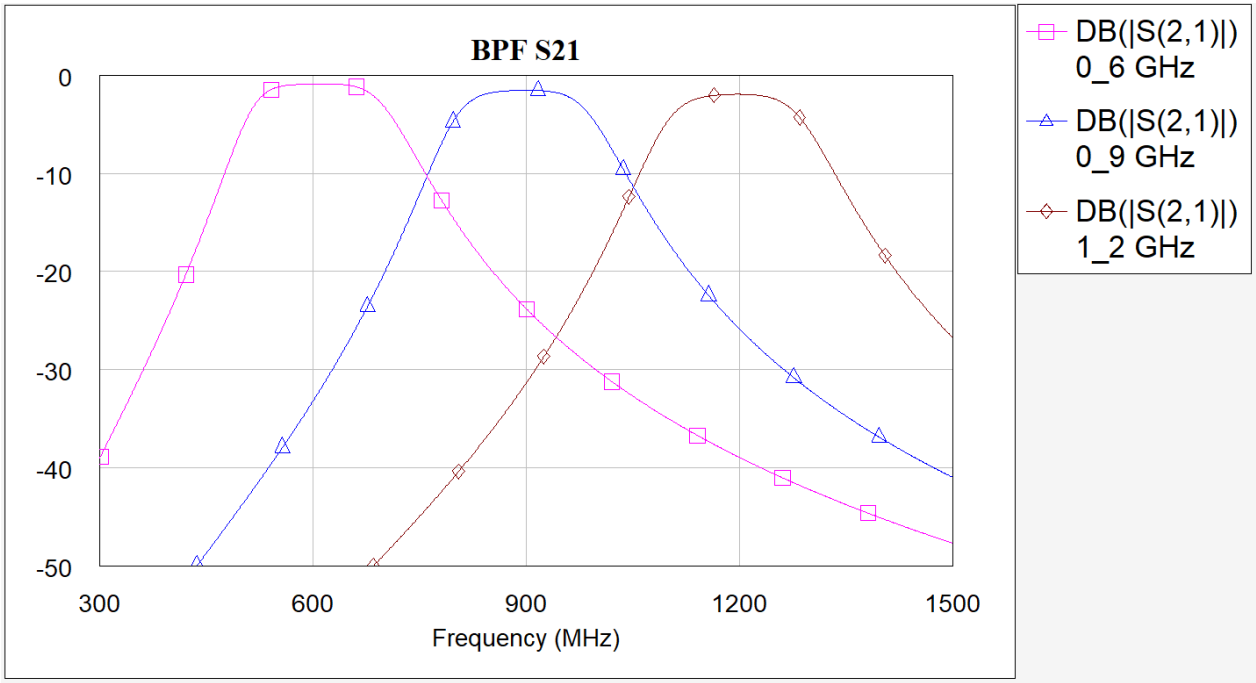

Figure 7. S21 Insertion Loss

3.1. 0.6 GHz Band-Pass Filter Analysis

The band-pass filter designed for a center frequency of 0.6 GHz was implemented for a 50 Ω system impedance. According to the simulation results, the filter achieves a minimum return loss (S11) of approximately -44.63 dB at 580 MHz. This value indicates excellent impedance matching between the filter input and the 50 Ω system. Values below -40 dB are generally considered to represent very good matching performance in practical RF applications.

When the transmission coefficient (S21) is examined, maximum transmission occurs around 614 MHz, with an insertion loss of approximately -0.8 dB at this point. This result indicates that the signal is transmitted with very low loss within the passband. The 3 dB bandwidth is approximately between 518 MHz and 698 MHz, resulting in a bandwidth of about 180 MHz. This value is very close to the design targets.

In the stopband region, suppression levels between approximately -35 dB and -45 dB are achieved across other frequency bands. This demonstrates that the filter effectively attenuates unwanted harmonic components.

3.2. 0.9 GHz Band-Pass Filter Analysis

For the band-pass filter designed with a center frequency of 0.9 GHz, compatibility with a 50 Ω system impedance was maintained. According to the simulation results, the minimum S11 value is approximately -35.9 dB at around 894 MHz. This result indicates that the input impedance is well matched to the system impedance.

When the S21 response is examined, maximum transmission occurs around 901 MHz, with an insertion loss of approximately -1.5 dB. For an LC-based filter operating in the GHz frequency range, this value represents an acceptable level of loss. As the frequency increases, higher losses are expected due to parasitic effects and the reduced quality factor (Q) of inductors.

The 3 dB bandwidth is measured between approximately 816 MHz and 976 MHz, resulting in a bandwidth of about 160 MHz. The passband exhibits a smooth and symmetric response around the center frequency. In the stopband regions, suppression levels of approximately 35–40 dB are achieved against other frequency bands.

3.3. 1.2 GHz Band-Pass Filter Analysis

For the band-pass filter designed with a center frequency of 1.2 GHz, the minimum S11 value is approximately -29.41 dB at around 1192 MHz. This value, being close to -30 dB, indicates very good impedance matching for high-frequency operation. As frequency increases, a slight degradation in matching performance is expected due to increased parasitic effects of the components.

In the S21 response, maximum transmission occurs around 1198 MHz, with an insertion loss of approximately -1.9 dB. This increased loss is mainly associated with the reduction in the quality factor (Q) of inductors at higher frequencies, as well as dielectric losses of the FR4 substrate material.

The 3 dB bandwidth is measured between approximately 1122 MHz and 1266 MHz, resulting in a bandwidth of about 144 MHz. In the stopband regions, suppression levels of approximately -40 dB are achieved. This indicates that the filter provides sufficient selectivity.

4. AWR SYSTEM DESIGNS

In this study, a multi-band RF signal generation and filtering system based on a PLL-VCO architecture was designed. In the system architecture, the ADF4351 PLL-VCO integrated circuit generates tunable RF signals at center frequencies of 0.6 GHz, 0.9 GHz, and 1.2 GHz using a stable reference clock obtained from a reference oscillator.

The generated signal is routed to the corresponding band-pass filter via a 1-to-3 RF switch located at the input stage. LC-based BPF structures, individually designed for each band, are optimized to pass only the selected center frequency while suppressing harmonic components.

The outputs of the filters are then recombined using a 3-to-1 RF switch and delivered to a single RF output port. All band selection and frequency tuning operations are controlled by the MCU through GPIO and serial control lines, enabling the system to be software-controlled and dynamically adjustable.

The objective of this architecture is to select the desired RF band, suppress unwanted frequency components, and obtain a clean and controlled RF output signal.

In the system-level AWR simulation performed in this study, the VCO was modeled using a parametric RF source (PORT_SRC), and band selection and switching operations were implemented by manually adjusting the BAND variable instead of using an MCU.

4.1. 0.6 GHz Selection (BAND = 1)

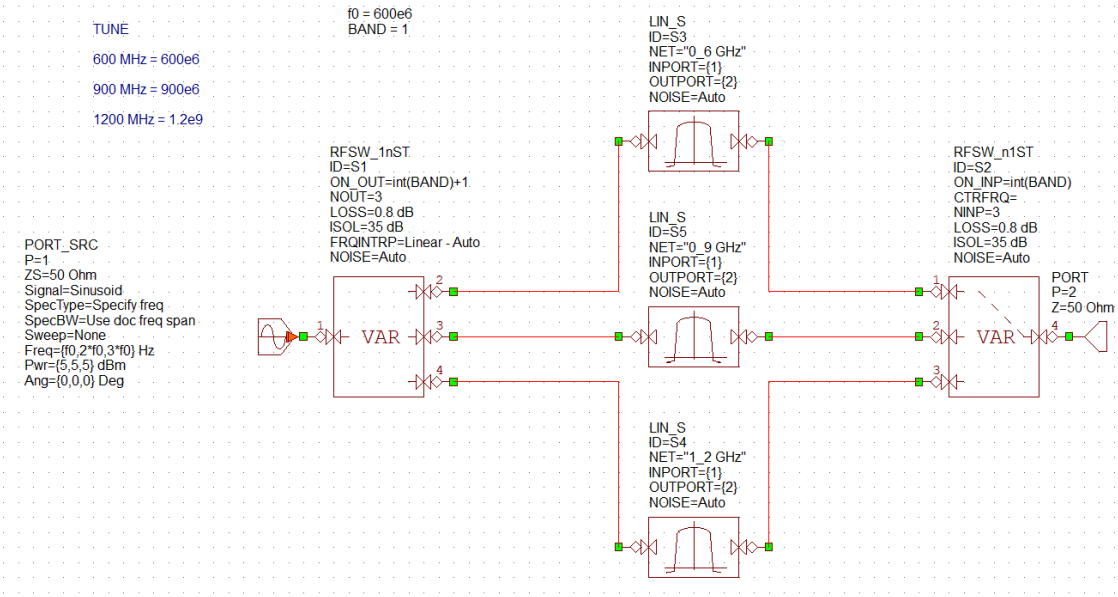

Figure 8. Band 1 System Diagram

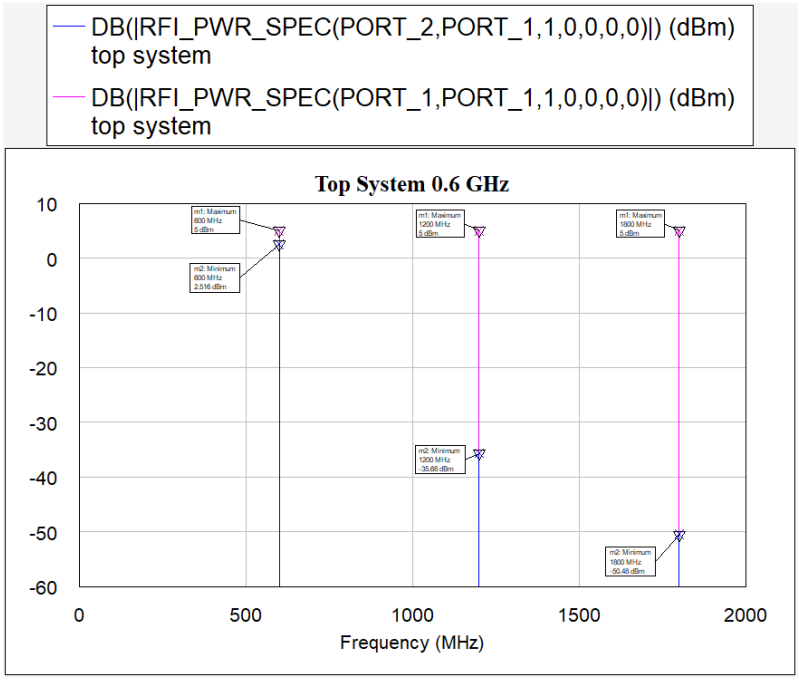

Figure 9. BAND 1

In the BAND 1 scenario, the input consists of three components, each at 5 dBm: 0.6 GHz (f_0), 1.2 GHz ($2f_0$), and 1.8 GHz ($3f_0$). At the output, the 0.6 GHz component is observed at 2.516 dBm. Therefore, the total insertion loss is approximately 5 − 2.516 = 2.48 dB.

This value is consistent with the insertion loss of the RF switches along the selected path combined with the insertion loss of the 0.6 GHz BPF, confirming that the system operates within the passband.

In terms of harmonic suppression, the output power at 1.2 GHz is -35.68 dBm (approximately 40.68 dB suppression), and at 1.8 GHz it is -50.48 dBm (approximately 55.48 dB suppression).

This indicates that when the 0.6 GHz band is selected, the stopband characteristics of the BPF together with the isolation of the RF switches effectively attenuate the harmonics. The increased suppression observed at the third harmonic is also consistent with the expected selectivity behavior.

4.2. 0.9 GHz Selection (BAND = 2)

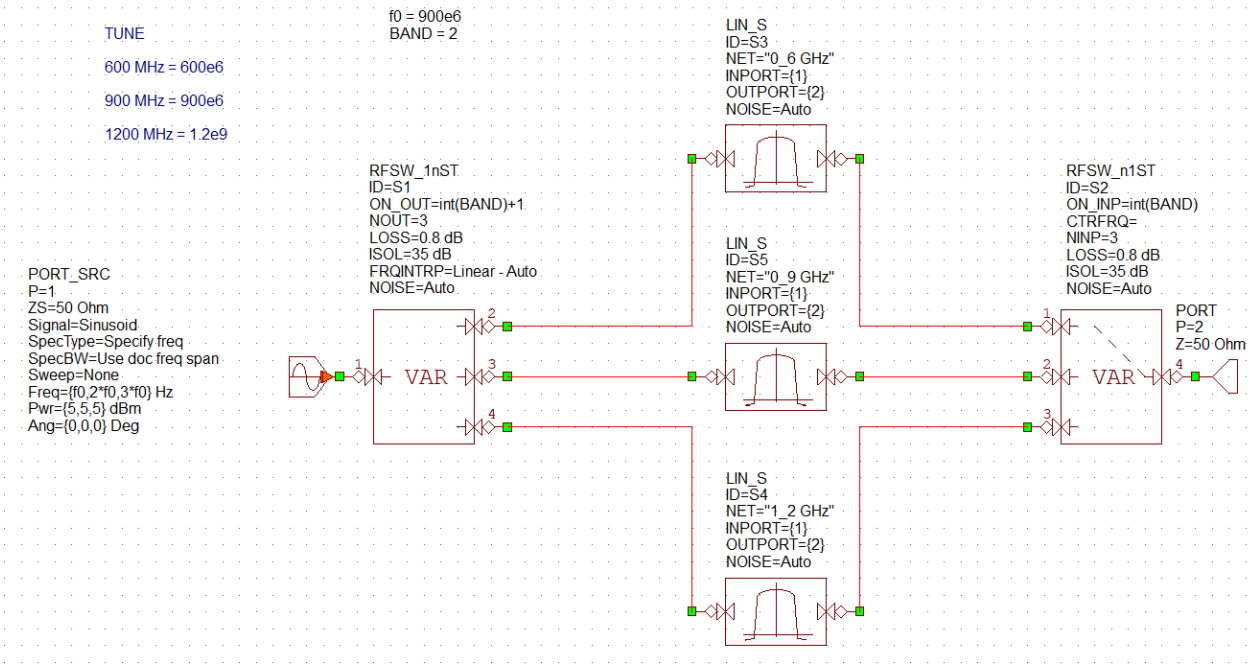

Figure 10. Band 2 System Diagram

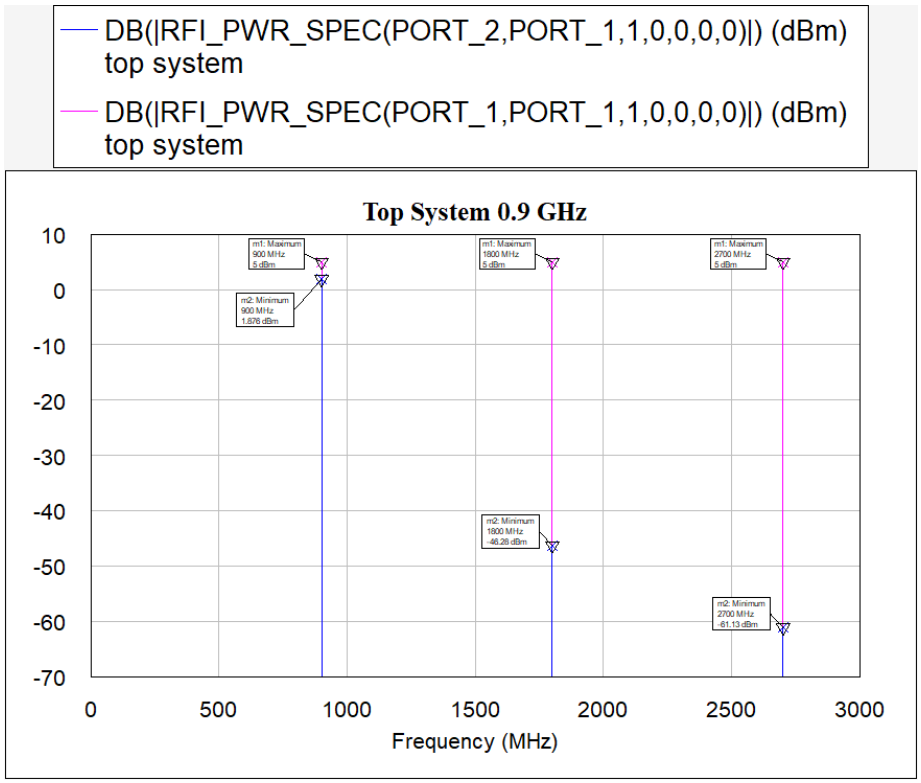

Figure 11. BAND 2

In the BAND 2 scenario, the source again generates three frequency components: 0.9 GHz, 1.8 GHz, and 2.7 GHz.

When the 0.9 GHz band is selected, the fundamental component at the output is observed at 1.878 dBm. This corresponds to a total insertion loss of approximately 5 − 1.878 = 3.12 dB.

The slightly higher loss compared to the 0.6 GHz case can be explained by the insertion loss of the 0.9 GHz filter, the losses introduced by the RF switches, and the increased parasitic effects associated with higher frequencies.

In terms of harmonic suppression, the output at 1.8 GHz is -46.26 dBm (approximately 51.26 dB suppression), and at 2.7 GHz it is -61.13 dBm (approximately 66.13 dB suppression).

These results clearly confirm the design objective that "f_0 is passed while $2f_0$ and $3f_0$ are suppressed." Furthermore, the higher suppression observed at $3f_0$ indicates that the filter's stopband performance improves as the frequency moves further away from the center frequency.

4.3. 1.2 GHz Selection (BAND = 3)

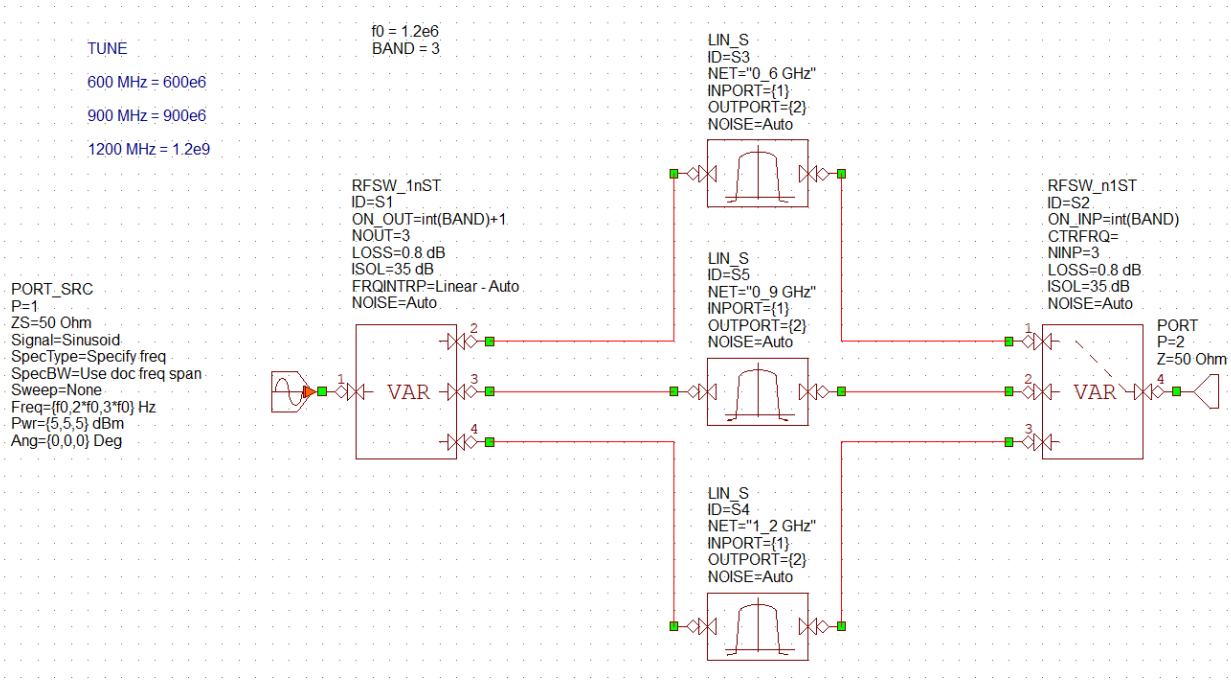

Figure 12. Band 3 System Diagram

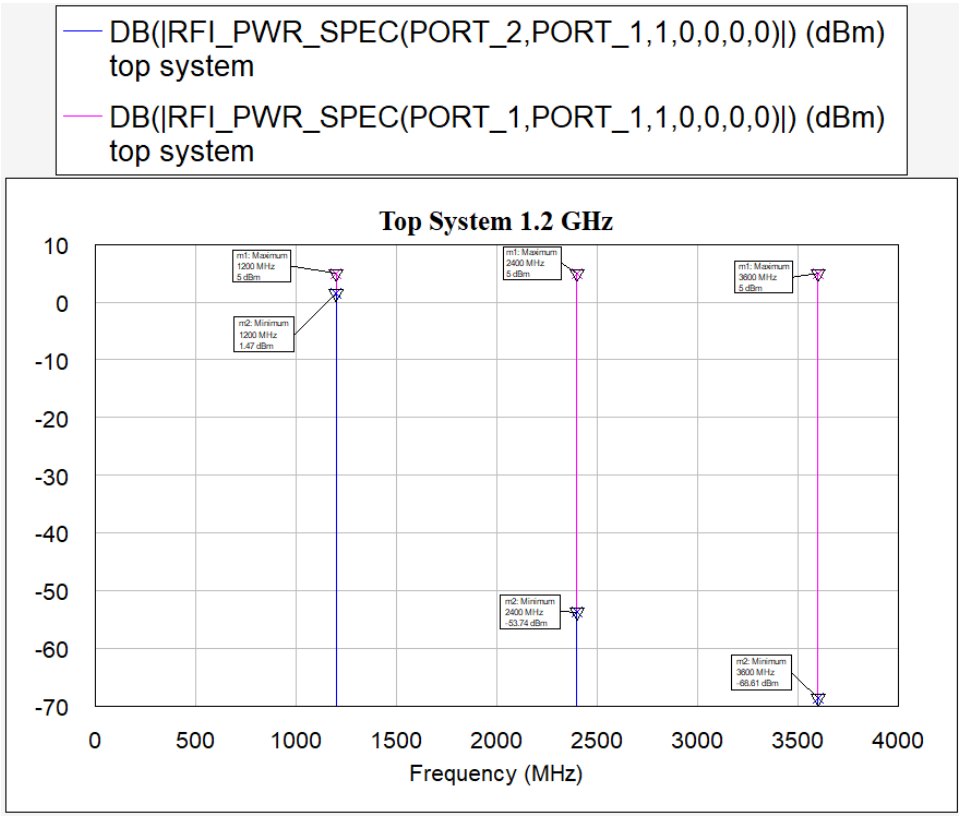

Figure 13. BAND 3

When BAND 3 is selected, the input source generates components at 1.2 GHz, 2.4 GHz, and 3.6 GHz.

For the 1.2 GHz selection, the fundamental component at the output is observed at 1.47 dBm. This corresponds to a total insertion loss of approximately 5 − 1.47 = 3.53 dB.

The slightly higher loss in this band is expected: as frequency increases, the quality factor (Q) of inductors decreases, while FR4 dielectric losses and parasitic effects increase. In addition, since the signal passes through two RF switches, the total insertion loss increases.

In terms of harmonic suppression, the output at 2.4 GHz is -53.74 dBm (approximately 58.74 dB suppression), and at 3.6 GHz it is -68.61 dBm (approximately 73.61 dB suppression). These values indicate very strong stopband performance, with unwanted components reduced to negligible levels at the output.

The PWR_SPEC results show that the selected band (f_0) is transmitted within the passband with a total loss of approximately 2.5–3.5 dB, while the $2f_0$ and $3f_0$ components are suppressed from around 40 dB up to over 70 dB, depending on the selected band.

Furthermore, defining the harmonic components at equal input power (5 dBm) creates a more challenging test scenario compared to real-world conditions. This approach clearly demonstrates the selectivity performance of both the BPFs and the RF switching architecture.

Note: In a real PLL-VCO output, the amplitudes of harmonic components decrease relative to the fundamental frequency. However, in this study, the second and third harmonics were intentionally defined at the same power level (5 dBm) as the fundamental component in order to more clearly evaluate the filtering performance of the system. Thus, the harmonic suppression capability of the band-pass filters was tested under a more challenging scenario, and their selectivity performance was clearly demonstrated.

5. KiCad SCHEMATIC DESIGN

5.1. Overall Schematic Structure

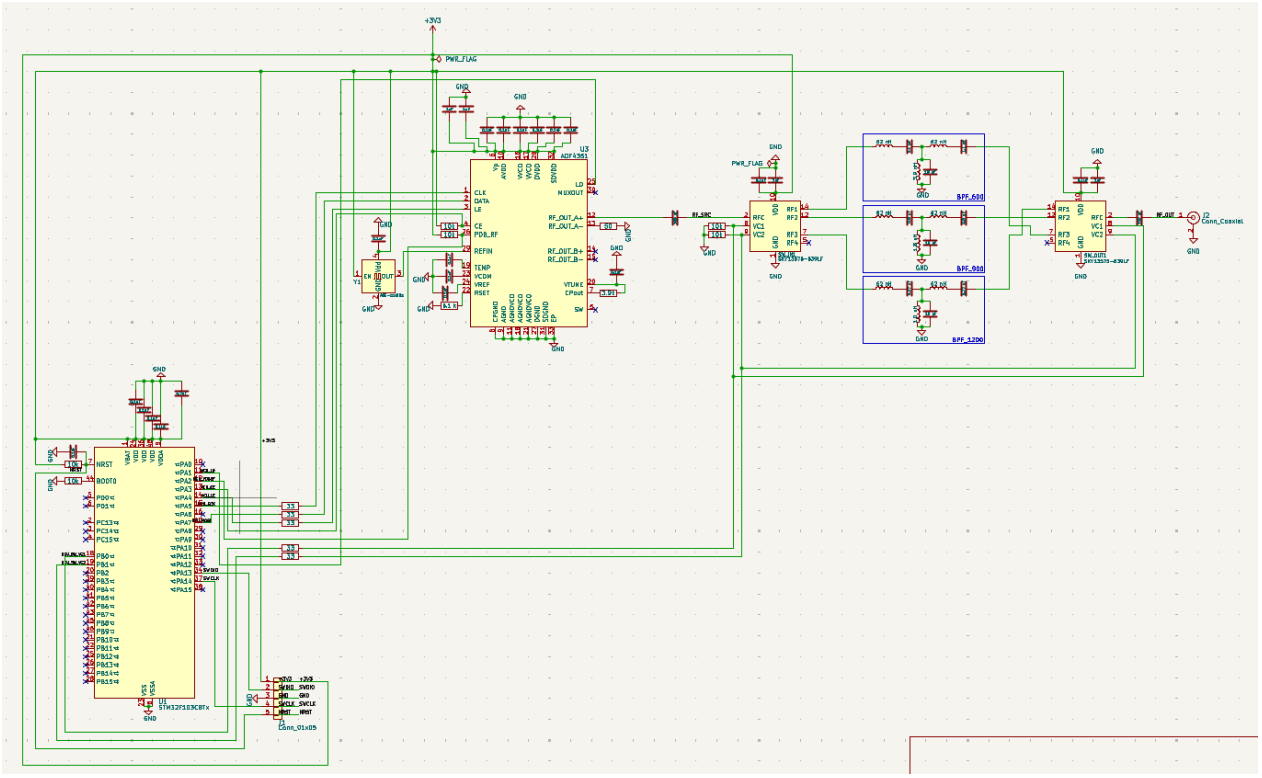

Figure 14. Overall Schematic View of the System Designed in KiCad

In this section, the schematic design of the system was created in the KiCad environment. The PLL-VCO-based multi-band RF architecture, previously validated through AWR simulations, was modeled at the schematic level considering physical realizability.

The ADF4351 PLL-VCO integrated circuit was used as the main RF source, while two RF switches (SP3T) and three LC-based band-pass filters were positioned as separate functional blocks. The input switch is used for band selection, whereas the output switch combines the selected path into a single RF output port.

All RF signal paths were designed to maintain a 50 Ω system impedance, and the control lines were defined through the MCU using SPI and GPIO interfaces.

5.2. PLL-VCO (ADF4351) Block, RF Switch, and BPF Connections

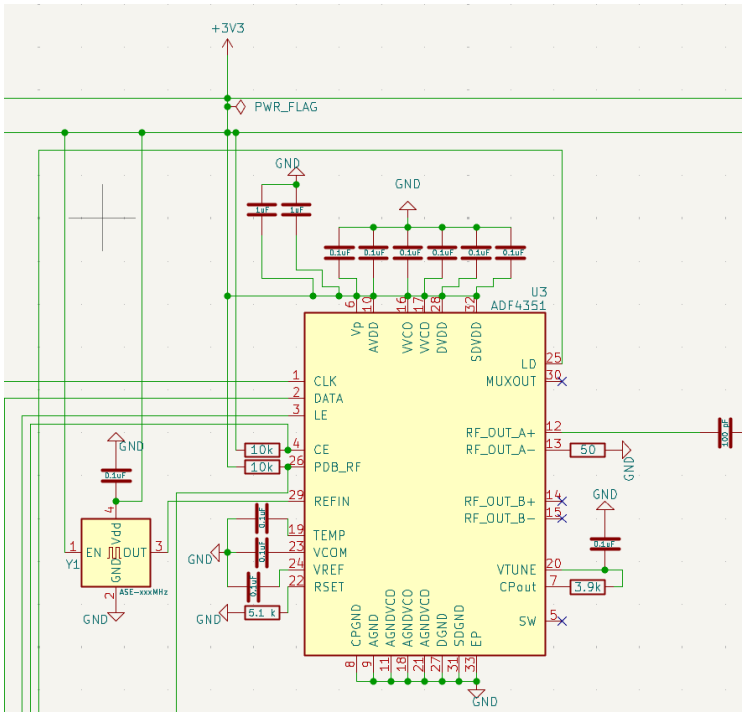

Figure 15. ADF4351 PLL-VCO Block and Power Supply Connections

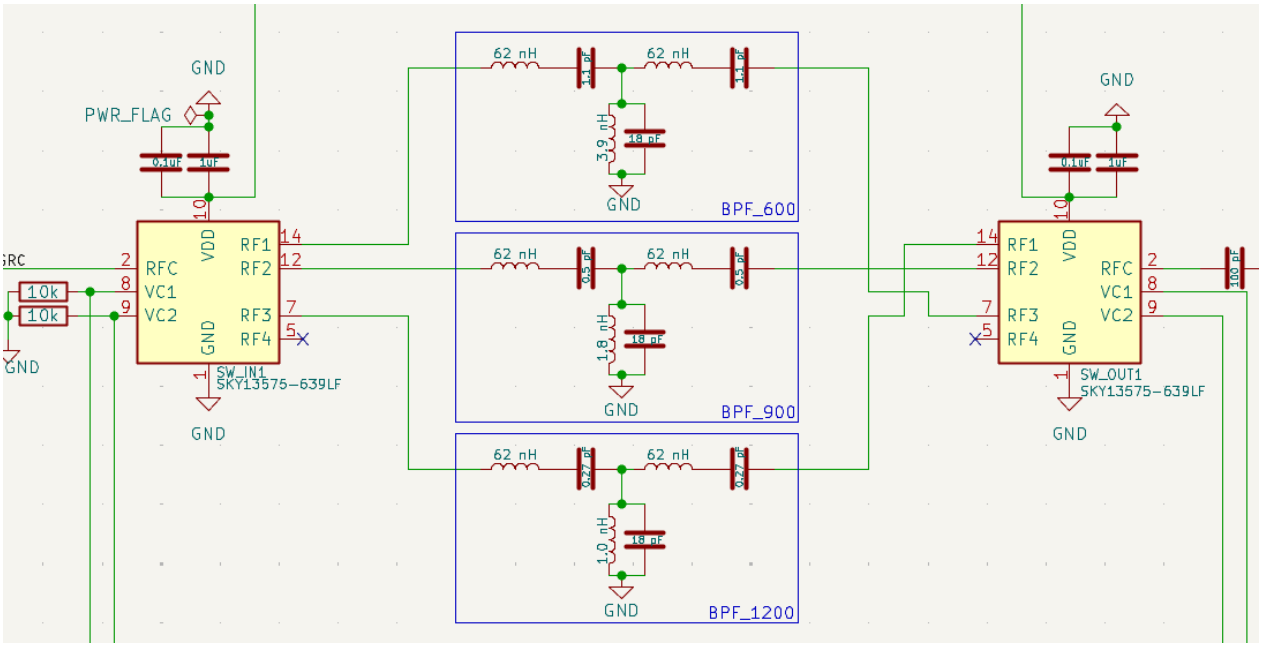

Figure 16. Connection Structure of the RF Switch and Three Band-Pass Filters

In the PLL-VCO block, the reference crystal, power supply pins, and bypass capacitors were placed as close as possible to the integrated circuit. This approach aims to minimize noise on the supply lines, thereby reducing phase noise and unwanted parasitic effects.

The RF switch block was designed to be controlled by the MCU, and the VCO output was routed to three different band-pass filter paths. Each filter was implemented using LC components and configured to operate at its respective center frequency (0.6 GHz, 0.9 GHz, and 1.2 GHz).

5.3. ERC (Electrical Rule Check) Verification

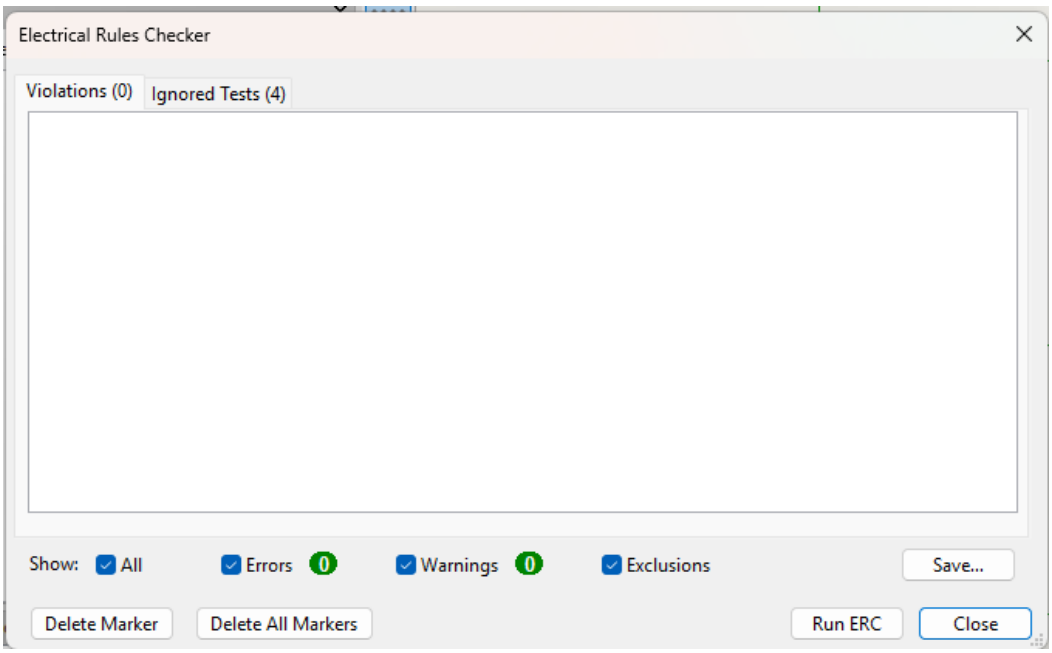

Figure 17. ERC Results for the Schematic

After completing the schematic design, an Electrical Rule Check (ERC) was performed in the KiCad environment.

As a result of the ERC analysis, no connection errors were detected. This indicates that the power, ground, and signal connections were properly defined and that the design is electrically consistent.

6. PCB LAYER STRUCTURE AND STACKUP DEFINITION

6.1. Stackup Definition and PCB Layout

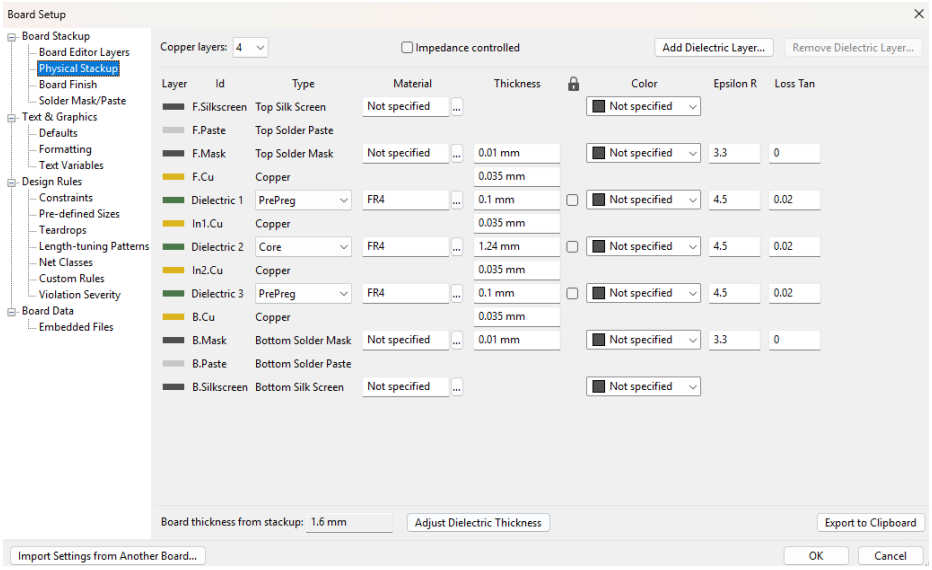

Figure 18. 4-Layer PCB Stackup Structure

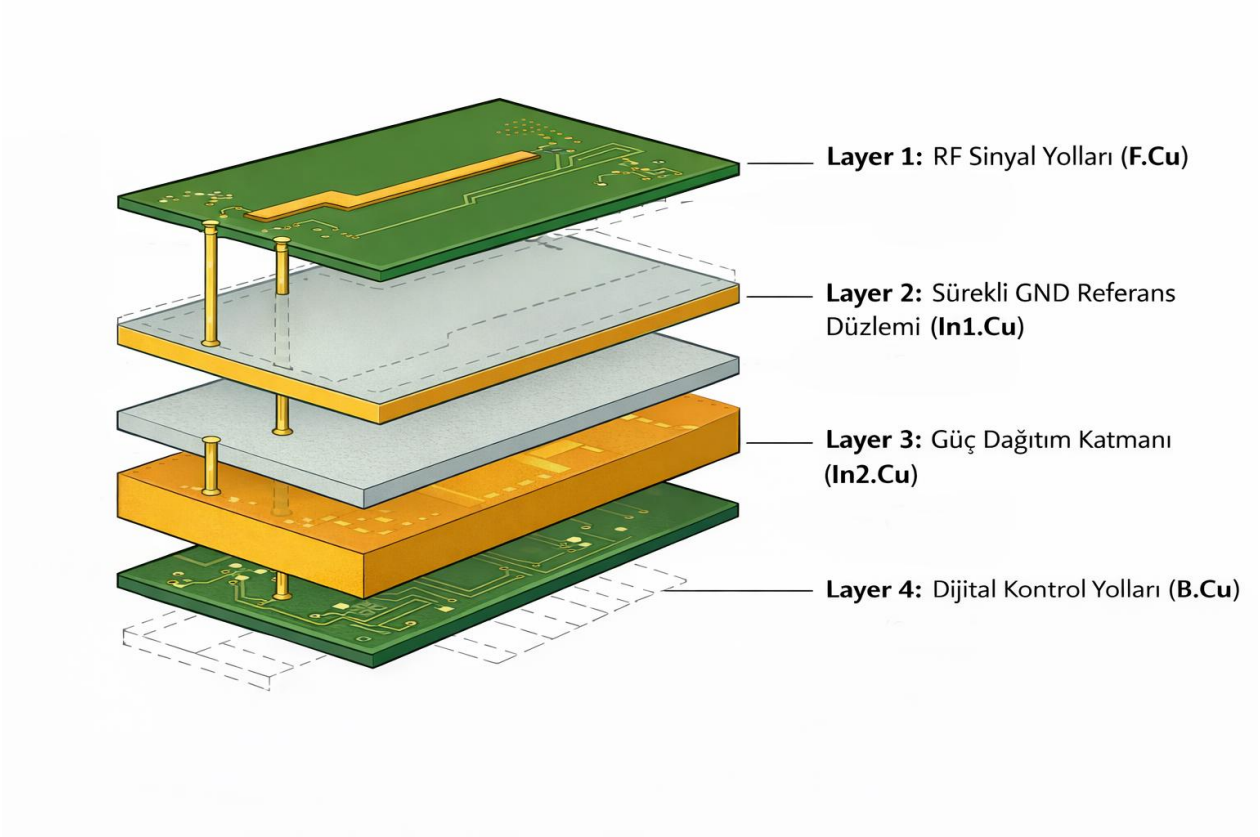

Figure 19. PCB Stackup Diagram

To preserve RF performance, a 4-layer PCB structure was selected. The layer stackup was planned as follows:

- **Layer 1 (F.Cu):** RF signal traces
- **Layer 2 (In1.Cu):** Continuous (solid) ground plane
- **Layer 3 (In2.Cu):** Power distribution and auxiliary signals
- **Layer 4 (B.Cu):** Digital control traces

The dielectric thickness between the top layer and the In1 layer was defined as 0.1 mm. This structure enables proper microstrip impedance control and provides a continuous return current path beneath the RF traces.

The required RF trace width for 50 Ω impedance was calculated using the KiCad Transmission Line Calculator and determined to be 0.1724 mm.

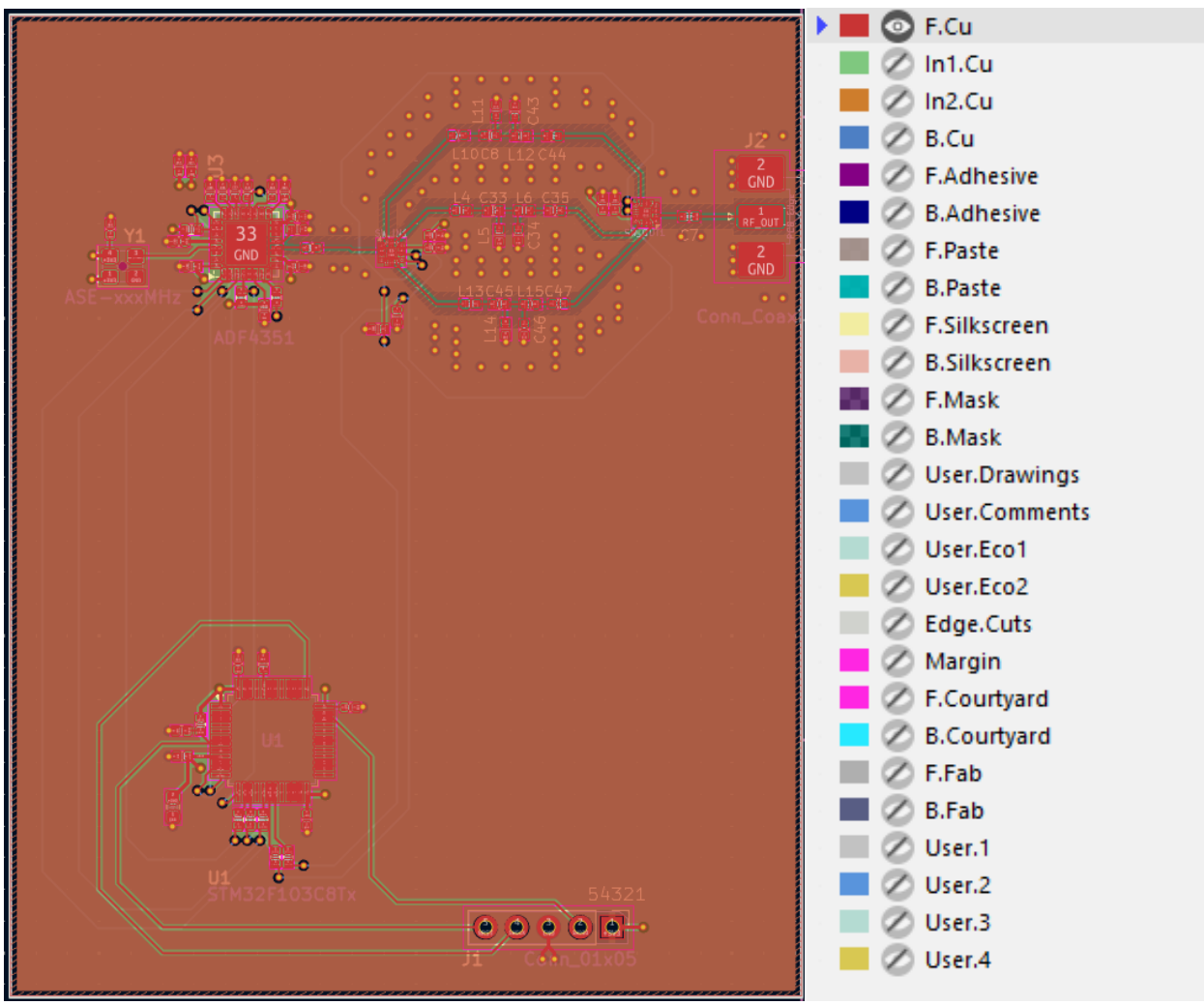

Figure 20. General PCB Layout

7. RF PCB LAYOUT DETAILS

7.1. Layer 1 (F.Cu) – RF Signal Traces

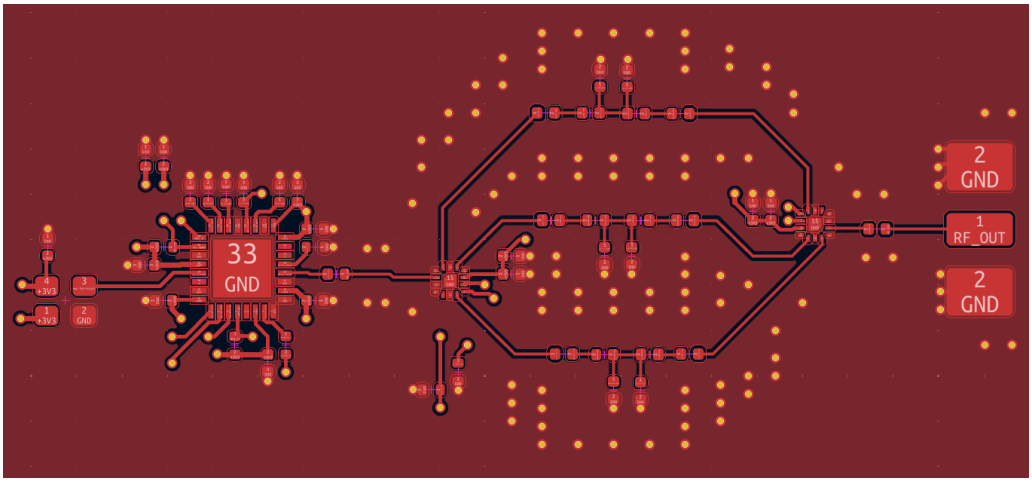

Figure 21. RF Signal Traces

The top layer (F.Cu) of the PCB design is used as the main layer for RF signal routing. The RF signal generated from the PLL-VCO output is routed through this layer to the RF switch and subsequently to the band-pass filters.The RF traces were designed using a microstrip structure with a target characteristic impedance of 50 Ω. For this purpose, the trace width was calculated as 0.1724 mm using the KiCad Transmission Line Calculator.To maintain impedance continuity along the RF paths, abrupt changes in trace width were avoided, and the routing was kept as short and direct as possible.

7.2. Layer 2 (In1.Cu) – Continuous Ground Reference Plane

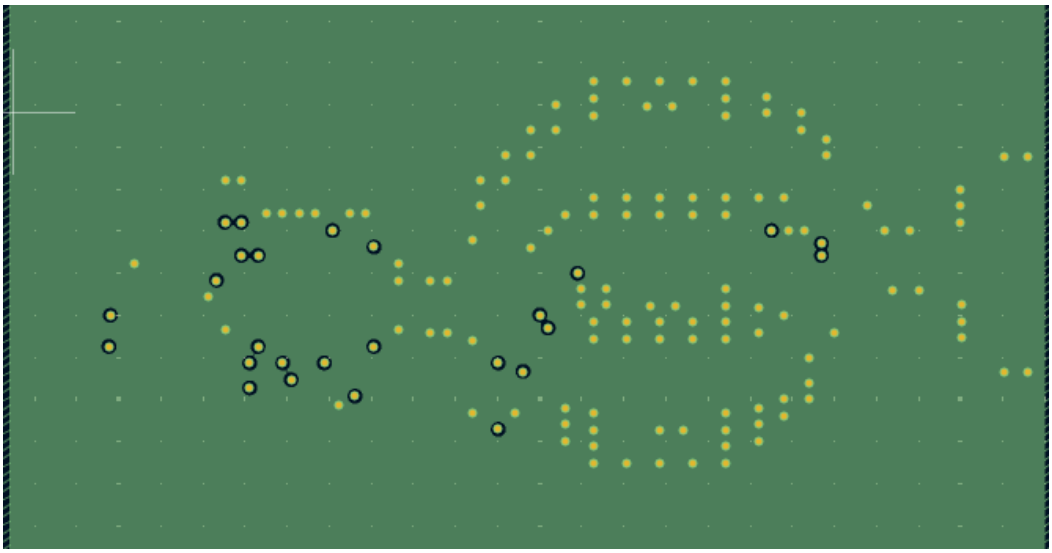

Figure 22. Ground Plane (In1 Layer)

The second layer (In1.Cu) was designed as a solid ground plane to provide a continuous ground reference for the RF signal traces.

This structure ensures a continuous reference surface beneath the RF microstrip lines on the top layer, allowing the return current to flow in a stable and well-defined path.

The use of a continuous ground plane helps maintain impedance continuity and contributes to the reduction of electromagnetic interference (EMI).

7.3. Layer 3 (In2.Cu) – Power Distribution

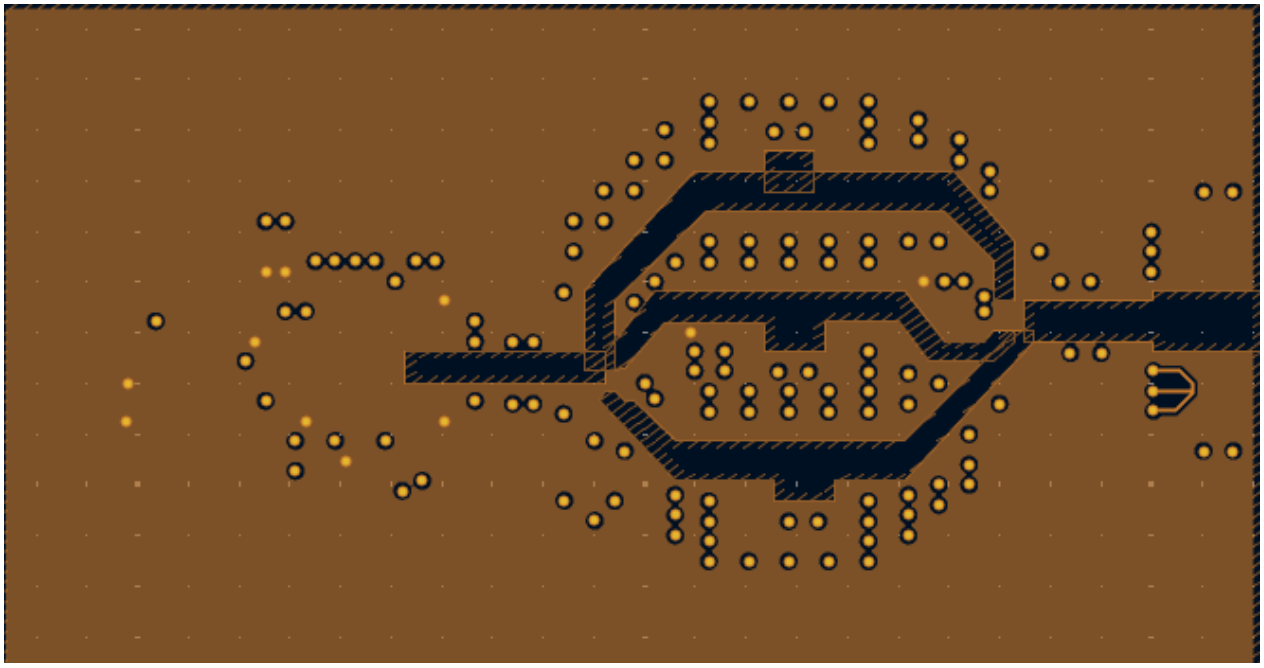

Figure 23. In2 Layer Used for Power Distribution

The third layer (In2.Cu) was used for distributing the 3.3 V power supply within the circuit. This layer enables a more organized and efficient power distribution across the PCB.

In accordance with RF design principles, no power traces were routed beneath the RF signal paths located on the top layer. This approach helps preserve the characteristic impedance of the RF lines and reduces unwanted electromagnetic interactions.

Therefore, the 3.3 V power traces were routed in areas away from the RF signal paths.

7.4. Layer 4 (B.Cu) – Digital Control Traces

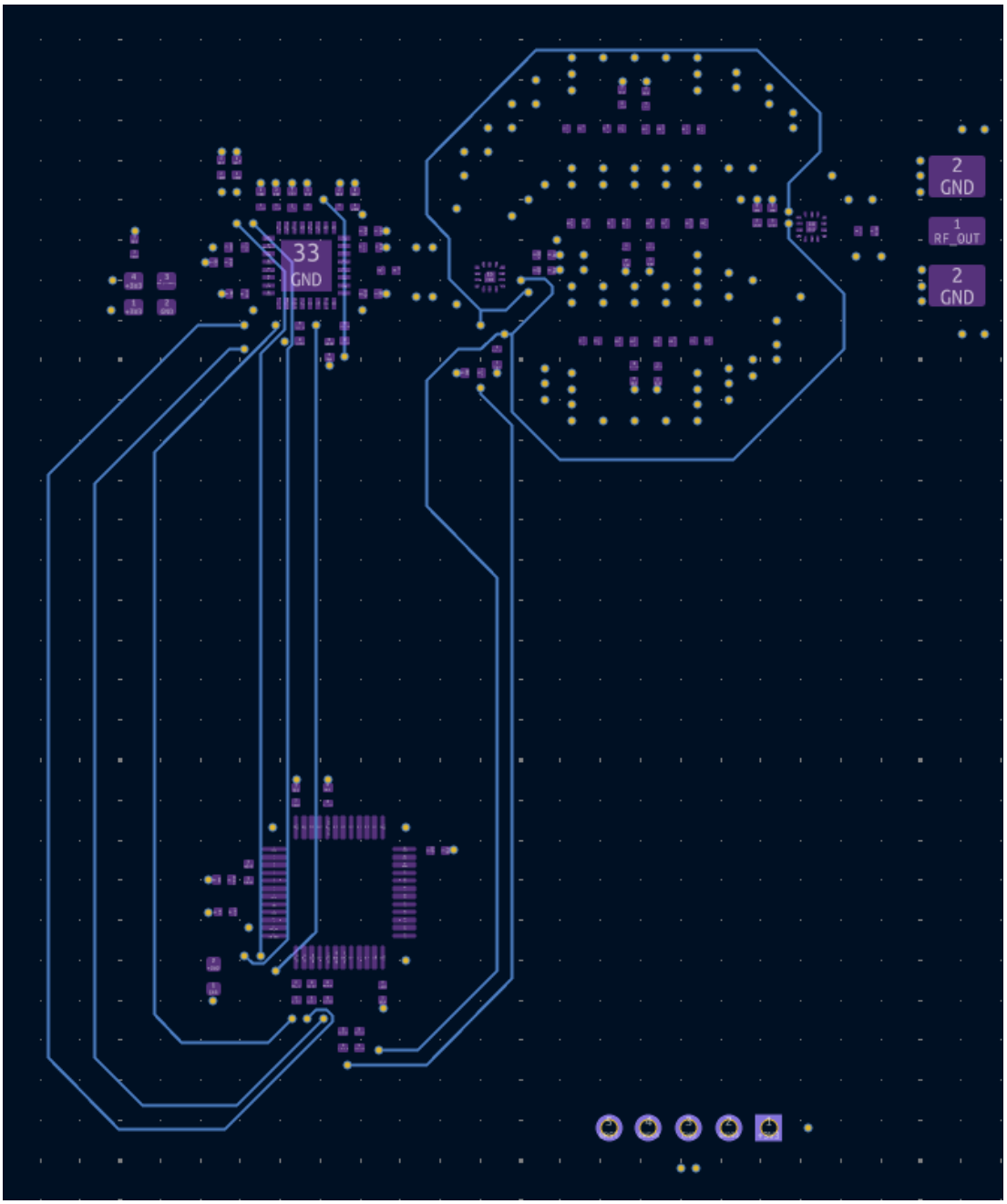

Figure 24. Bottom Layer with Digital Control Traces

The bottom layer (B.Cu) was used for routing microcontroller control signals and low-frequency digital traces.

By placing the RF signal paths and digital control traces on separate layers, the impact of digital noise on high-frequency signals was minimized.

7.5. Via Structure and Grounding

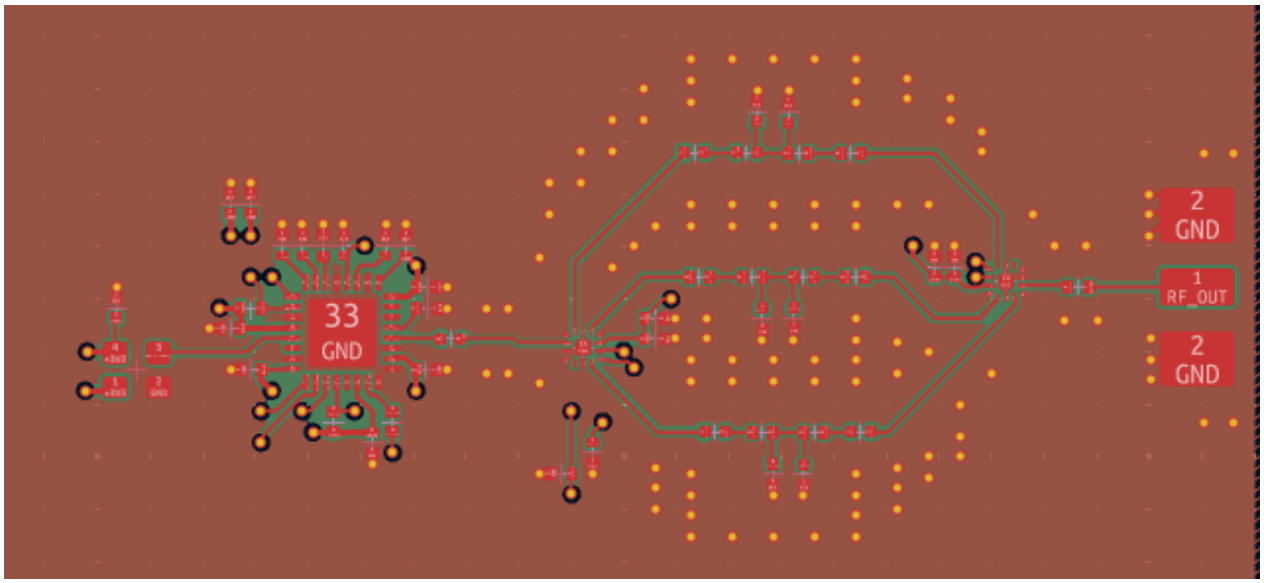

Figure 25. Via Structures Used on the PCB

In the PCB design, via structures were used to provide electrical connections between different layers. Vias were utilized both for ground connections and for routing signal paths between layers.

Some digital control traces were transferred from the top layer to the bottom layer using vias in order to avoid interfering with the RF signal routing. After being routed on the bottom layer, they were brought back to the top layer again using vias.

This approach allowed for a more organized layout around the RF traces and helped avoid unnecessary crossings over the RF signal paths.

7.6. SMA Edge-Mount Connector

An edge-mount SMA connector was used for the RF output port. The connector was directly connected to the 50 Ω microstrip RF trace.

The ground pads of the connector were connected to the PCB ground plane through vias, ensuring impedance continuity.

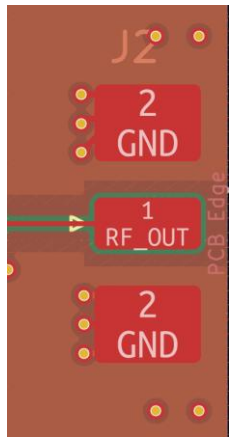

Figure 26. Edge-Mount SMA Connector Placement

7.7. 3.3 V Power Supply Input

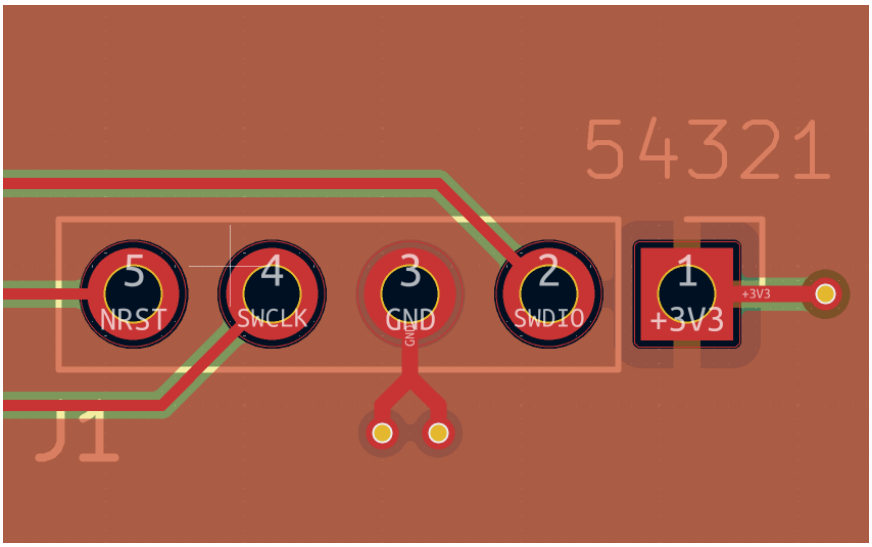

Figure 27. 3.3 V Input

In the PCB design, the supply voltage of the circuit is provided from an external source. The 3.3 V supply line is applied to the PCB through pin 1 of the J1 connector. This pin is directly connected to the +3V3 net and distributes power to the onboard power distribution network.

The supply voltage is routed through the PCB layers to provide the required power for active components such as the ADF4351 frequency synthesizer, RF switches, and the microcontroller.

This configuration allows the power connection to be easily supplied from an external power source.

7.8. 3D PCB View

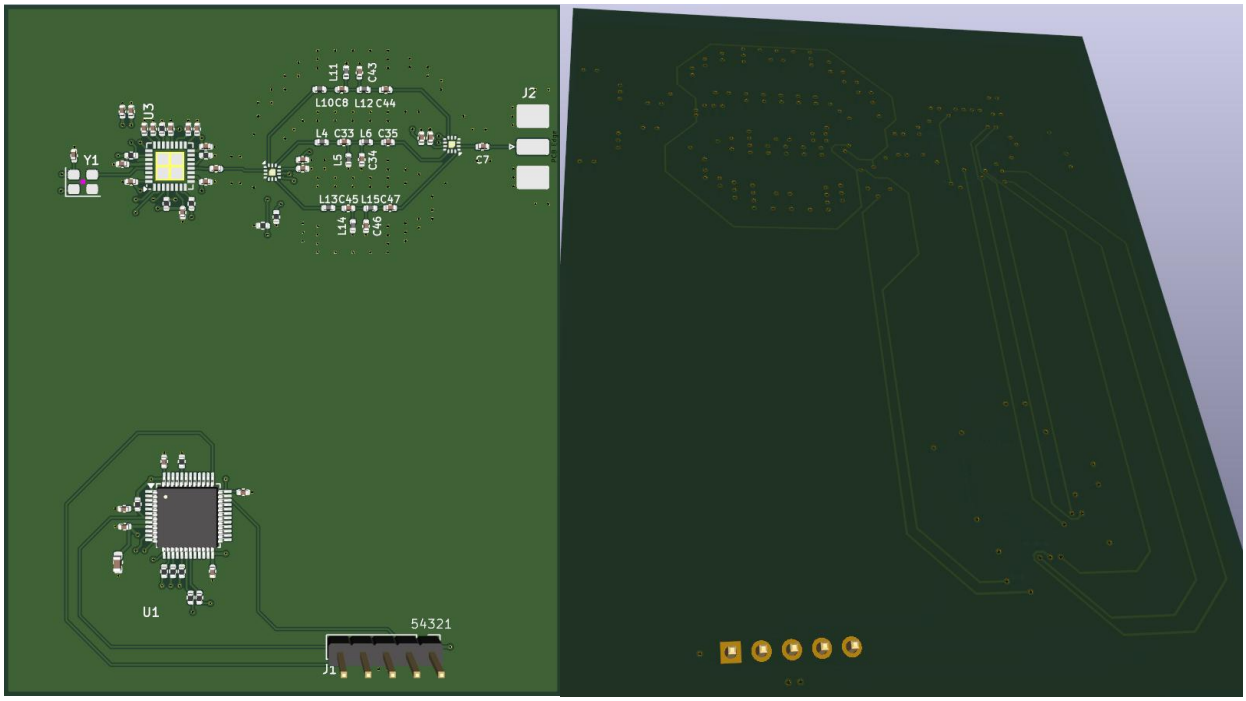

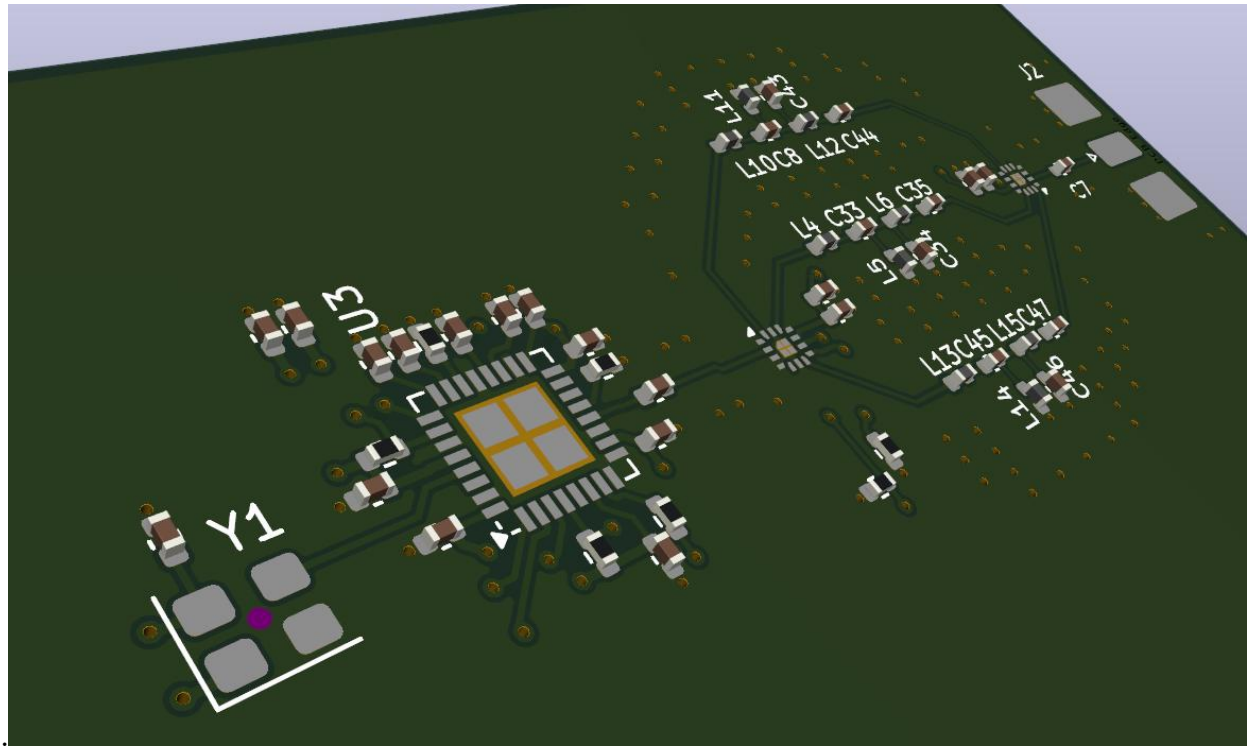

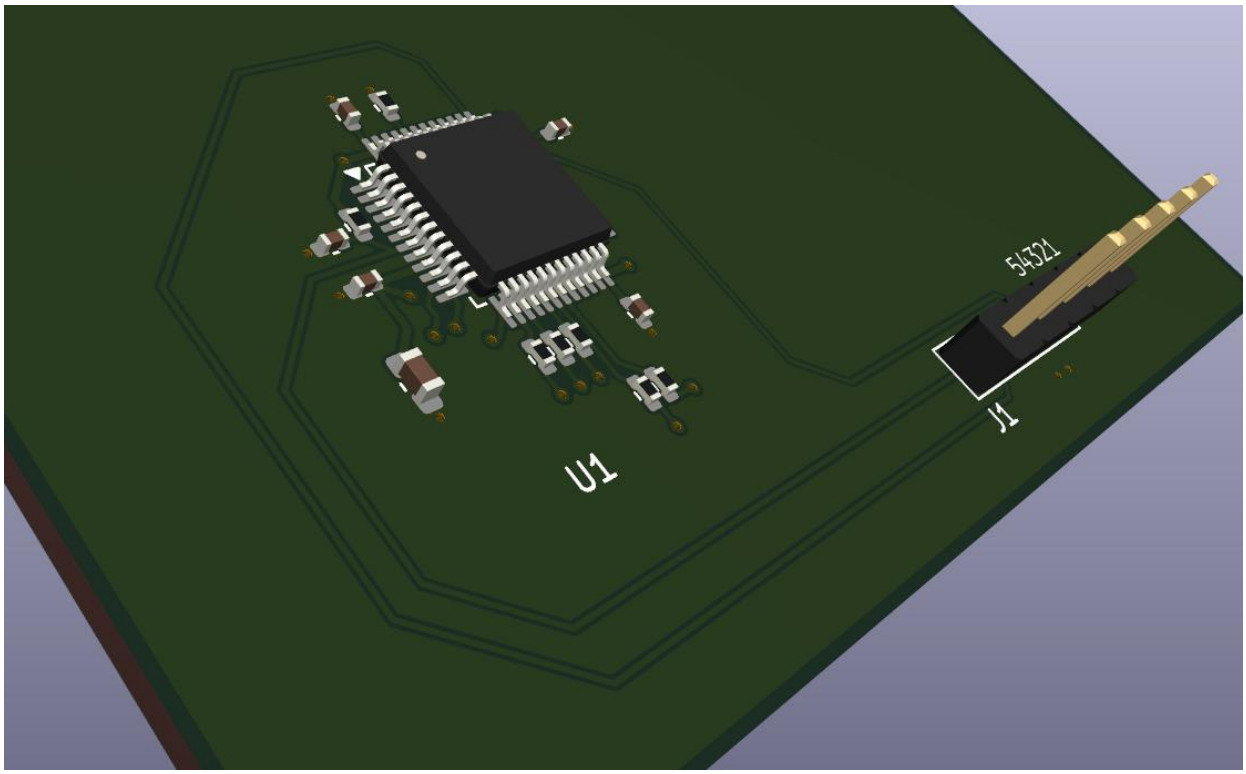

Figure 28. 3D View of the Designed PCB

8. DRC CHECK, GERBER, AND DRILL FILES

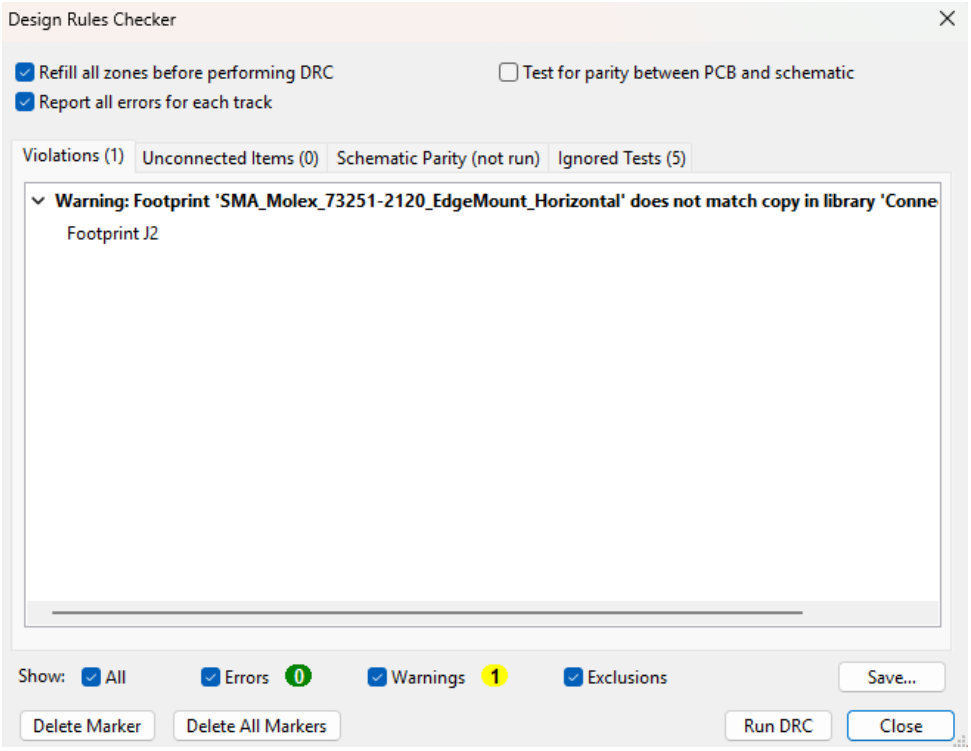

Figure 29. Design Rule Check (DRC) Results for the PCB

After completing the PCB layout design, a Design Rule Check (DRC) analysis was performed in the KiCad environment.

The results indicated that no errors were detected in the design. Only a warning related to the library–footprint association was observed; however, this does not pose any issue in terms of electrical performance or manufacturability.

These results confirm that the PCB design is suitable for production.

Ad	Boyut	Sıkı. boyut	Tür	Değişme	CRC32
..			Dosya klasörü		
staj proje.drl	3.330	1.043	DRL Dosyası	2.03.2026 04:21	AB97316C
staj proje-B_Cu.gbl	10.176	2.242	GBL Dosyası	2.03.2026 04:20	D48C5A1A
staj proje-B_Mask.gbs	688	405	GBS Dosyası	2.03.2026 04:20	AE3194E7
staj proje-B_Paste.gbp	468	319	GBP Dosyası	2.03.2026 04:20	C0384805
staj proje-B_Silkscreen.gbo	700	407	GBO Dosyası	2.03.2026 04:20	B3491A92
staj proje-Edge_Cuts.gm1	633	377	GM1 Dosyası	2.03.2026 04:20	A827594A
staj proje-F_Cu.gtl	196.687	46.127	GTL Dosyası	2.03.2026 04:20	43640C4A
staj proje-F_Mask.gts	13.161	2.785	GTS Dosyası	2.03.2026 04:20	E89EAB80
staj proje-F_Paste.gtp	13.222	2.795	GTP Dosyası	2.03.2026 04:20	B4D09D2C
staj proje-F_Silkscreen.gto	52.233	9.449	GTO Dosyası	2.03.2026 04:20	0AC6B0D0
staj proje-In1_Cu.g1	46.688	8.870	G1 Dosyası	2.03.2026 04:20	09B3E8E4
staj proje-In2_Cu.g2	153.527	28.319	G2 Dosyası	2.03.2026 04:20	343C1CD2
staj proje-job.gbrjob	3.875	821	GBRJOB Dosyası	2.03.2026 04:20	21F89118

Figure 30. Gerber and Drill Files

After completing the PCB design, the Gerber and drill files required for manufacturing were generated in the KiCad environment.

The Gerber files define the copper layers, solder mask layers, silkscreen layers, and mechanical boundaries of the PCB. The drill file contains the location and diameter information of the holes to be drilled on the PCB.

These generated files are standard manufacturing files that can be directly used in the PCB fabrication process.

This project demonstrates the design of a complete RF front-end system capable of frequency synthesis, band selection, and harmonic suppression. Such systems are widely used in wireless communication, radar systems, and RF testing applications.
The results confirm that the proposed architecture provides stable signal generation, effective filtering, and high selectivity across multiple frequency bands.