EC6020

Embedded Systems Design

Project Proposal

Rescue Boat Protection and Emergency Coordination System Using Embedded Mesh Networking

Faculty of Engineering

University of Jaffna

GROUP MEMBERS :

KARUNANAYAKA H.K.V.S - 2022/E/043

JAYARATHNA H.M.M.N - 2022/E/051

HERATH H.M.N.P - 2022/E/052

GUNAWARDHANA K.H.M.I - 2022/E/072

THENNAKOON T.M.H.R - 2022/E/156

Problem and Solution

Problem:

Sri Lanka has recently faced severe natural disasters such as cyclones, floods, and heavy storms. During such disasters, rescue boats play a critical role in saving stranded civilians and transporting emergency supplies. However, rescue operations are often conducted under dangerous and unpredictable conditions, including rough sea states, poor visibility, and loss of communication.

One of the major challenges faced during rescue missions is the lack of real-time safety monitoring and coordination among rescue boats. Rescue boats may become damaged, overloaded, or even sink due to harsh environmental conditions. Additionally, communication failures can prevent timely assistance when a rescue boat itself encounters danger.

These issues can lead to delays in rescue operations, increased risk to rescue personnel, and potential loss of life.

Solution:

To address these challenges, this project proposes a Rescue Boat Protection and Emergency Coordination System based on embedded systems and mesh networking. Each rescue boat is equipped with a standalone embedded safety node capable of detecting emergency conditions and transmitting alerts to nearby rescue boats.

The system uses long-range wireless communication to form a decentralized mesh network among rescue boats. If a rescue boat experiences danger—such as capsizing, collision, or manual SOS activation—an emergency alert containing the boat's location and status is automatically broadcast to nearby boats. This ensures rapid response, improved coordination, and enhanced safety for rescue teams, even when conventional communication infrastructure is unavailable.

Introduction about project :

The proposed system is an embedded safety and coordination platform designed specifically for rescue boats operating in disaster-affected regions. Each rescue boat is equipped with a standalone microcontroller-based unit integrated with sensors, a wireless communication module, and a power management system.
The system continuously monitors the status of rescue boats and allows rescue personnel to manually trigger emergency alerts using an SOS button. In critical situations such as boat capsizing or system failure, alerts are automatically generated and transmitted. Emergency messages are propagated through a mesh network, ensuring that nearby rescue boats receive timely information even if the affected boat is far from shore or out of mobile network coverage.

Uniqueness of the Project

- Focuses specifically on rescue boat safety, not civilian monitoring
- Automatic capsize detection combined with manual SOS triggering
- Infrastructure-independent mesh networking
- Real-time location-based alerts to nearby rescue units

High-Level Architecture

The system consists of multiple rescue boat nodes forming a distributed mesh network.

System Components

Input System:

- SOS push button
- Capsize / motion sensors

Processing Unit:

- Standalone microcontroller handling sensing, decision-making, and routing

Communication System:

- Long-range wireless module enabling boat-to-boat communication

Output System:

- Buzzer and LED indicators
- Mobile application alerts

Power System:

- Battery-powered operation with charging and voltage regulation

Technological Choices:

Hardware Components

- Standalone microcontroller (e.g., ATmega328P)
- Long-range wireless module (LoRa)
- GPS module for location tracking

- Motion / tilt sensor for capsize detection
- Battery, charging, and regulation circuitry
- LEDs and buzzer for alerts

Software Technologies

- Embedded C/C++ for firmware development
- Mobile application for alert visualization
- SPI, UART, and I2C communication protocols

Communication Protocols

- SPI: Communication between microcontroller and LoRa module
- UART: GPS data reception and mobile interface communication
- I2C: Sensor interfacing (motion / tilt detection)

Why This Technology?

The chosen microcontroller-based architecture offers low power consumption, reliability, and flexibility, which are essential for marine rescue applications. Long-range wireless communication enables real-time coordination between rescue boats without relying on GSM or internet connectivity. Mesh networking improves system robustness by allowing alerts to be forwarded dynamically, ensuring uninterrupted communication during rescue missions.

❖ [GitHub Repository]

Circuit Design

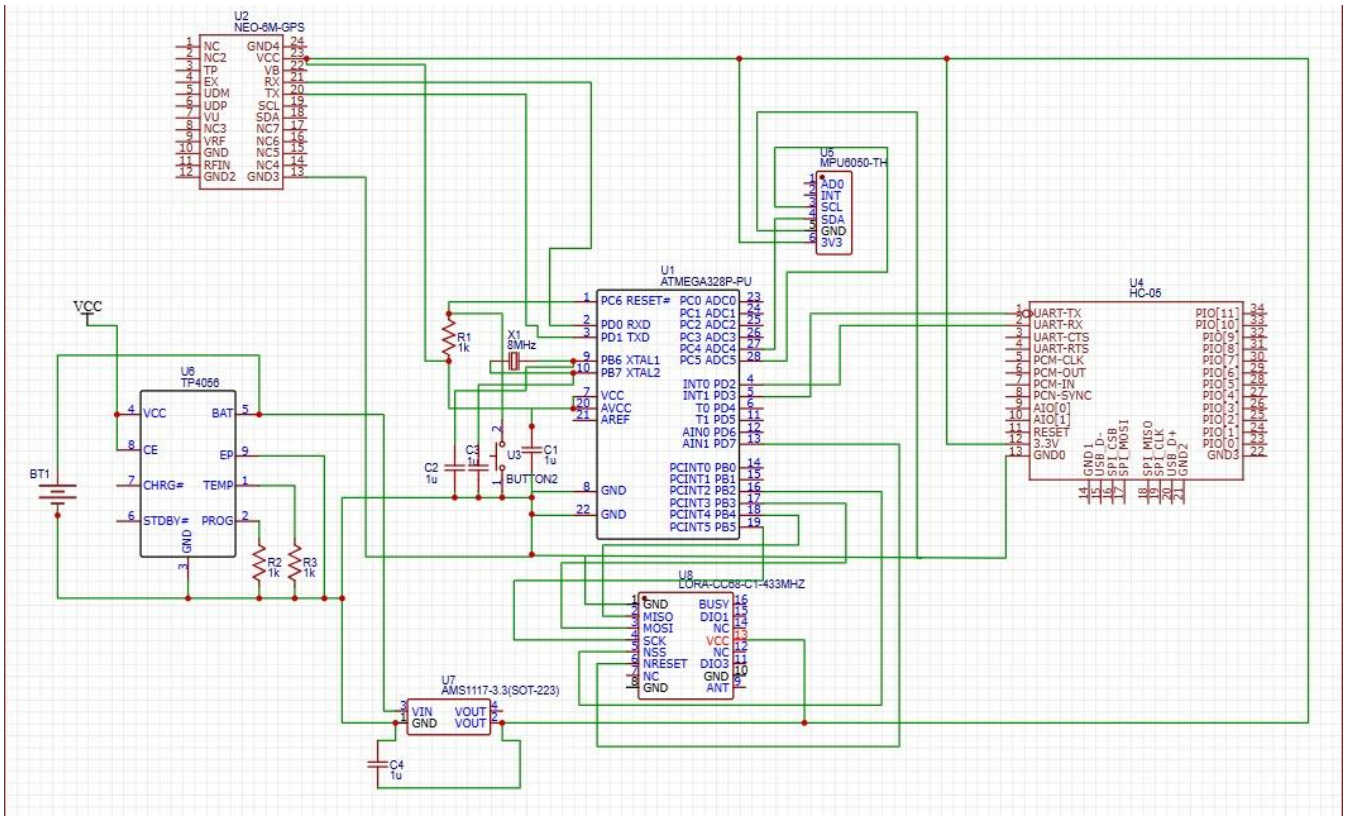

This circuit represents a Rescue Boat Protection System powered by a 3.7 V Li-ion battery with safe charging through a TP4056 IC and regulated to 3.3 V using an AMS1117. A standalone ATmega328P microcontroller controls the system, receiving location data from a GPS module and motion data from an MPU6050 sensor for capsize detection, while an SOS button allows manual emergency triggering. When a danger is detected, the system transmits an alert containing the boat’s status and location via a LoRa module to nearby rescue boats using mesh networking, and simultaneously sends the alert to a mobile application through a Bluetooth module, enabling fast coordination and improved safety during rescue operations.

System Architecture

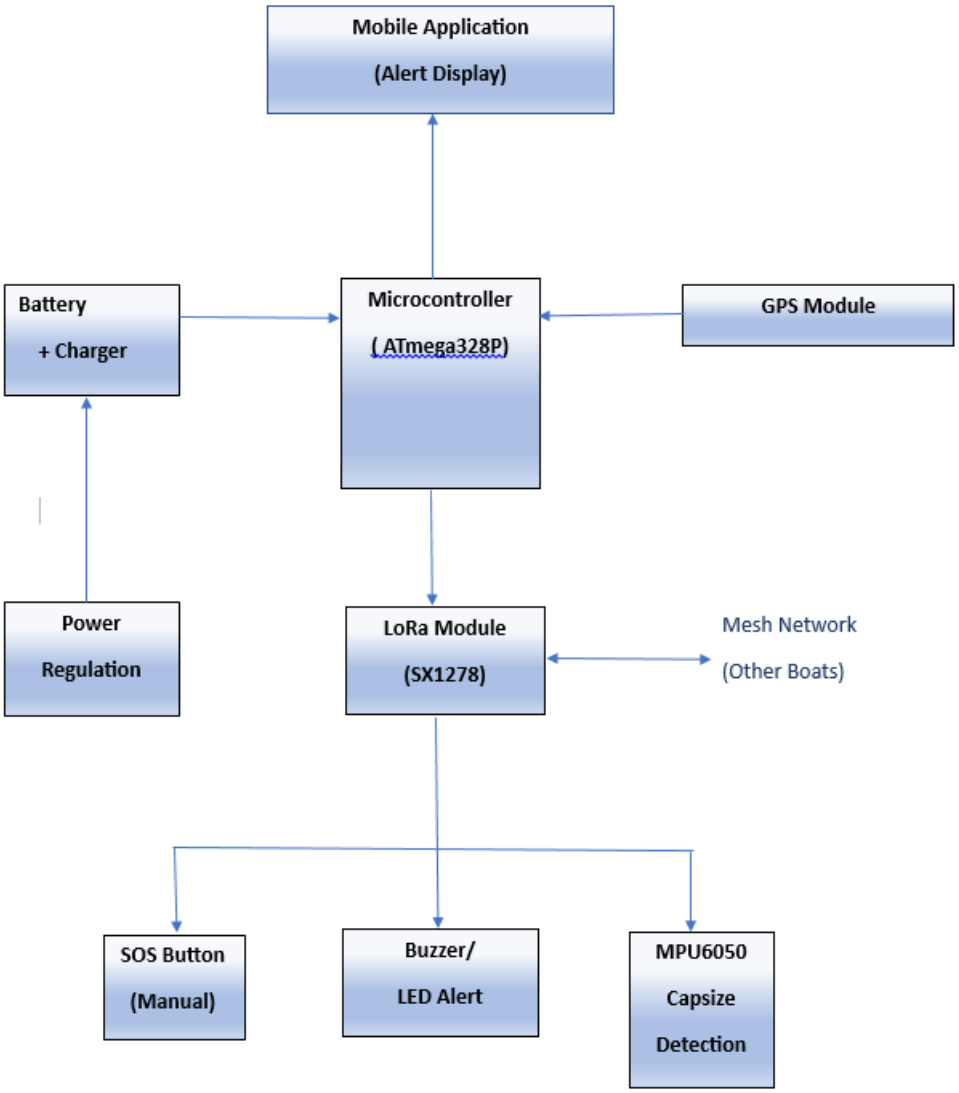

TIMELINE

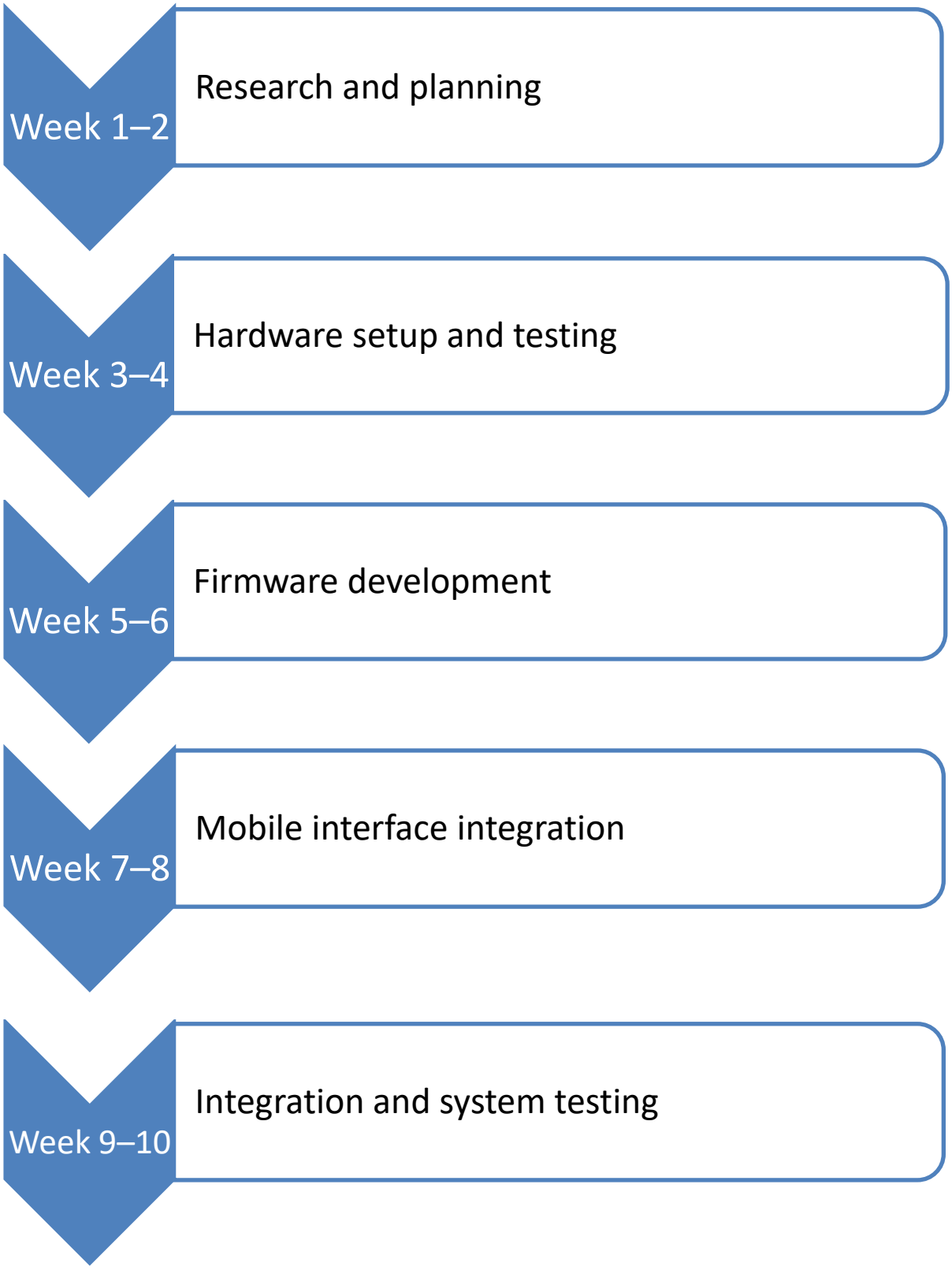
Week 1–2
Research and planning
Week 3–4
Hardware setup and testing
Week 5–6
Firmware development
Week 7–8
Mobile interface integration
Week 9–10
Integration and system testing

BUDGET

No.	Component	Specification	Unit Price (LKR)	Total (LKR)
1	Microcontroller	ATmega328P-PU (Standalone)	750	750
2	LoRa Module	SX1278 (433 MHz)	1,500	1,500
3	GPS Module	NEO-6M	1,000	1,000
4	Bluetooth Module	HC-05	700	700
5	Accelerometer	MPU6050	680	680
6	Li-ion Battery	18650 (3.7 V)	520	520
7	Charging module(Type C)	TP4056	50	50
8	Voltage Regulator	AMS1117-3.3	10	10
9	SOS Push Button	Waterproof type	300	300
10	Buzzer	Active Buzzer	170	170
11	LED + Resistor	Status indicator	80	80
12	Antenna	433 MHz external	120	120
13	Capacitors & Resistors	Assorted	400	400
14	PCB / Breadboard	Prototype board	300	300
15	Wiring & Connectors	Jumper wires	250	250
16	Enclosure	Waterproof (IP-rated)	400	400
Total				7,230