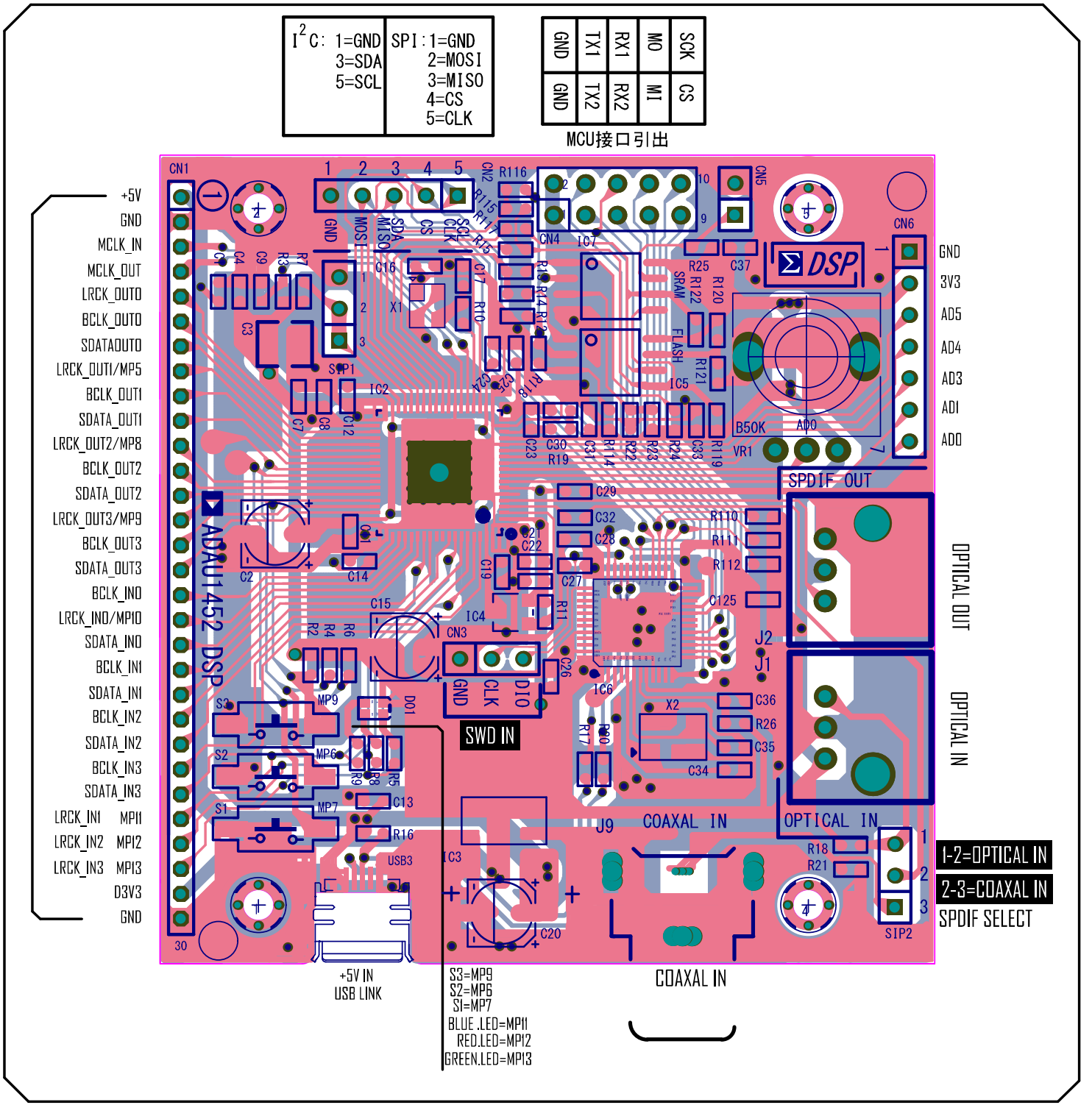
I2C: 1=GND
3=SDA
5=SCL
SPI: 1=GND
2=MOSI
3=MISO
4=CS
5=CLK
GND TX1 RX1 MO SCK
GND TX2 RX2 MI CS
MCU接口引出
+5V
GND
MCLK_IN
MCLK_OUT
LRCK_OUT0
BCLK_OUT0
SDATAOUT0
LRCK_OUT1/MP5
BCLK_OUT1
SDATA_OUT1
LRCK_OUT2/MP8
BCLK_OUT2
SDATA_OUT2
LRCK_OUT3/MP9
BCLK_OUT3
SDATA_OUT3
BCLK_IN0
LRCK_IN0/MP10
SDATA_IN0
BCLK_IN1
SDATA_IN1
BCLK_IN2
SDATA_IN2
BCLK_IN3
SDATA_IN3
LRCK_IN1 MP11
LRCK_IN2 MP12
LRCK_IN3 MP13
D3V3
GND
ADAU1452 DSP
GND
3V3
AD5
AD4
AD3
AD1
AD0
SPDIF OUT
OPTICAL OUT
OPTICAL IN
SWD IN
COAXAL IN
OPTICAL IN
1-2=OPTICAL IN
2-3=COAXAL IN
SPDIF SELECT
+5V IN
USB LINK
S3=MP9
S2=MP6
S1=MP7
BLUE .LED=MP11
RED.LED=MP12
GREEN.LED=MP13
COAXAL IN