Abdulrahman Sirajudeen-Sanni, 101193510
Arshia Chandel, 101260292
Hashanpreet Singh Dhaliwal, 101187722
Ibraheem Mohammed, 101262576

1.0 Introduction

The AADI-2004 agricultural aircraft [1], designed in AERO 3002, serves as the baseline for the design of a flap extension-retraction system intended for short take-off and landing (STOL) operations. Although the aircraft met its conceptual mission objectives, it did not originally incorporate a specific high-lift system. This project therefore focuses on designing a complete flap mechanism with integrated structural, mechanical, electrical, and avionics interfaces.

The work of this project includes establishing a set of system-level requirements, generating and selecting feasible concept designs, performing aerodynamic, structural, and subsystem analyses, and completed Failure Modes and Effects Analysis (FMEA). The objective of this project is to evaluate the feasibility and safety of a single-slotted Fowler flap actuation system and its integration within the AADI-2004 wing.

This report includes the full design process conducted by the group and provides the justification and analysis behind the design of the aircraft's high-lift system. Figure 1 below shows an Isometric view of the aircraft as designed in AERO 3002. The Designed mission profile can be found in the Appendix.

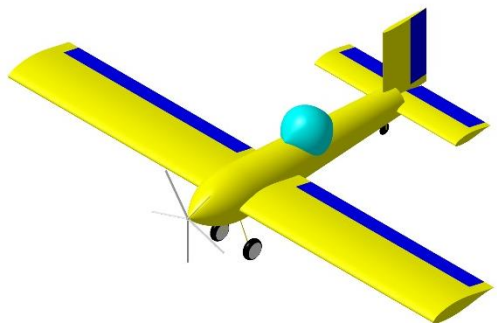

Figure 1: AADI Agricultural Aircraft [1]

1.1 Project Objectives

Mission Need Statement

Develop a flap extension-retraction system for integration into an aircraft conceptualized during the AERO 3002 group project.

Project Objective Statement

To research, design, and integrate a flap extension-retraction system, deployable up to 40 degrees, that complies with relevant airworthiness standards and is suitable for the AADI-2204 agricultural aircraft.

Stream-Specific Objectives and Work Distribution

To successfully accomplish the mission need and project objective, the work was divided into four streams:

1. Mechanical Design, performed by Ibraheem Mohammed. This component involved developing the flap geometry, track and carriage system, hinge layout, torque-tube routing, gearbox placement, and structural interfaces. This line of analysis led to the development of the CAD and structural sizing of the flap system.
2. Power and Actuation Systems, performed by Hashanpreet Singh Dhaliwal. This component involved performing actuator torque and power sizing calculations, an

aerodynamic analysis, and evaluating the feasibility of torque transmission through the torque-tube network. This line of work ensured that the actuation system could meet performance and safety requirements.

3. Control and Avionics Integration, performed by Arshia Chandel. This component designed the human-machine control interface, G3X display for visual feedback, an electrical architecture including elements such as circuit breakers and limit switches, and flap-position sensing. This line of work ensures that the flaps can deploy synchronously, while if a failure were to occur, with proper feedback, the pilot could be aware before catastrophic damage.
4. Systems Safety and Certification, performed by Abdulrahman Sirajudeen-Sanni. This component ensured the compliance of work completed with CAR/FAR 23 structural and control-system requirements, developed redundancy and fail-safe strategies, and completed a thorough Failure Modes and Effects Analysis (FMEA) on the electro-mechanical subsystem to identify and mitigate risk modes.

Organizational tools such as a work breakdown structure and Gantt chart were developed to ensure a smooth flow of work. These can be found in the Appendix section.

1.2 Background Research

The AADI-2004 is a single-crew agricultural aircraft with STOL capabilities designed for low altitude spraying operations [1]. Its mission requires safe and controlled flight at reduced air speeds, frequent takeoff and landing cycles from untarred farmland strips, and predictable behaviour while operating close to terrain. These conditions place significant demands on the aircraft's high-lift system, which must support both performance and safety margins during maneuvering, approach, and spray-run entry and exit. Key aircraft specifications and mission profiles from AERO 3002 are summarized in the appendix.

Agricultural and STOL aircraft depend heavily on effective high-lift devices to increase lift at low speeds, reduce stall margins, and enable short takeoff and landing distances. These systems enhance aerodynamic performance by delaying separation, improving controllability, and stabilizing low-speed maneuvering [2]. They must also remain reliable in the harsh operating environment typical of agricultural aviation. Exposure to fertilizer chemicals, dust, moisture, and repeated washdowns will likely accelerate rate of wear and tear, making durability, sealing, and maintenance accessibility critical. Together, these aerodynamic and environmental demands helped define requirements and constraints for the flap system design explored in this report.

2.0 System Requirements, Concept Development & Selection

This section summarizes requirements that guided the flap-system design, outlines concepts explored, and presents justification for the selected flap system. The objective here is to demonstrate that the chosen concept satisfies AADI-2004's mission needs.

2.1 System Requirements

The system-level requirements were defined early in the project for Deliverable 2 [3]. Using these requirements, the team established a design envelope for the flap mechanism. These requirements were shaped by AADI-2004's short-field agricultural mission, the structural capabilities of the wing, and the airworthiness intent of CAR 523/525 [4]. Table 2.1 presents summarized critical constraints and criteria for design. A detailed version can be found in the Appendix

Table 2.1: AADI 2004 Flap System Requirements

ID	Requirement	Rationale
Performance Requirements		
SLR-P1	Flap shall achieve 40° ± 2° maximum deflection and operate safely up to 164 KTAS with SF = 1.5.	Supports STOL lift needs and complies with CAR 525 load factors [4].
SLR-P2	Total flap-system mass shall be ≤5% of the wing structural weight.	Prevents CG shift and preserves aircraft performance margins.
SLR-P3	System shall provide sufficient lift augmentation to reduce stall speed and meet short-field takeoff/landing requirements.	Ensures safe low-speed agricultural operations.
Configuration Requirements		
SLR-C1	Aircraft shall use a flap spanning ≥55% of the semi-span.	Provides meaningful lift increase while maintaining aileron authority.
SLR-C2	All tracks, linkages, and fairings shall fit inside the trailing-edge volume and meet aerodynamic drag constraints.	Ensures system compatibility with existing wing geometry and performance targets.
SLR-C3	Flap mechanisms must remain serviceable via trailing-edge panels without disturbing hopper or spray-system hardware.	Supports maintainability required for high-frequency agricultural sortie rates.
Hardware Requirements		
SLR-H1	Full deployment shall occur within 8 ± 1 s, and actuation must prevent free-floating or uncommanded motion.	Provides predictable flap handling and safe low-speed transitions.
SLR-H2	Hinges, tracks, carriages, and actuation components shall achieve ≥25,000 cycles of fatigue life.	Reflects repetitive daily operations common in agricultural missions.
SLR-H3	System shall include dual position sensors with ≤1° accuracy and jam/position disagreement detection.	Enables symmetry monitoring and supports safe flap deployment.
Control Avionics and Safety Requirements		
SLR-CT1	Cockpit flap lever shall provide detents at 0°, 10°, 20°, 30°, 40°, with position displayed on the G3X.	Standardizes flap settings and reduces pilot workload.
SLR-CT2	Deployment shall be inhibited above V_FE, and the system shall reject invalid or noisy commands.	Protects structure and prevents unintended motion.
SLR-CT3	G3X shall provide fault annunciation for jams, sensor failures, and runaway conditions.	Ensures timely pilot awareness and compliance with CAR 523.699 [4] intent.
SLR-S1	System shall limit asymmetric flap deployment to ≤2°–5°, depending on flight condition.	Prevents hazardous roll moments during low-altitude operations.
SLR-S2	Runaway flap motion must stop within ≤1.0 s or ≤2° of unintended travel.	Prevents divergence from commanded configuration.
SLR-S3	Emergency extension shall achieve ≥25° flap deflection within 15 s using manual force ≤150 N.	Ensures safe landing capability after actuation failure.
Enviromental Requirements		
SLR-SCA4	System shall operate from −40°C to +55°C, resist dust, moisture, fertilizer chemicals, and accommodate washdowns.	Agricultural aircraft face severe contamination and temperature cycles.
SLR-M1	Components shall be replaceable within ≤30 minutes using line-removable hardware.	Minimizes downtime between spray runs.
SLR-M2	Bearings, tracks, and jackscrews shall incorporate corrosion protection and sealing.	Ensures long-term reliability in harsh environments.

These requirements reflect the realities of agricultural operations: repeated short-field cycles, high contamination exposure, and the need for simple, robust maintenance access. They also dictated the performance targets used when evaluating concept feasibility.

2.2 Concept Development Overview

The team went through a structured concept development process to identify flap architectures capable of meeting the AADI-2004's STOL and agricultural mission requirements. Four candidate concepts were generated and assessed against lift performance, structural and packaging impact, actuation complexity, maintainability, and suitability for a contamination-heavy operating environment. Each concept represents a different trade-off between aerodynamic benefit and system complexity.

2.2.1 Concept A – Split Flap

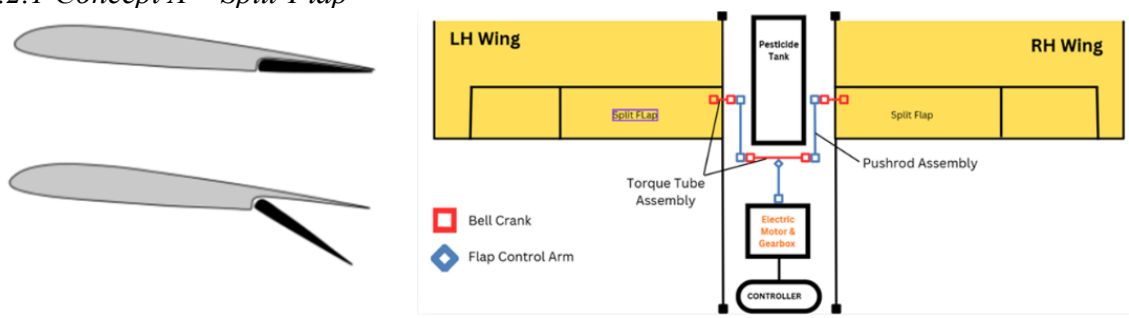

Figure 2: Concept A- Split Flap System [5]

The split flap with torque tubes, bell cranks and pushrod assembly, as shown in Figure 2, is a hinged lower-surface panel that deflects into the flow to increase camber. It is mechanically simple, uses a single hinge line, and is easy to manufacture and maintain. It is actuated using an electrical motor and gearbox. For the AADI-2004, this simplicity is attractive, but the aerodynamic benefit is limited. Split flaps generate modest increases in lift and produce a large, separated wake behind the flap, which can degrade spray-pattern uniformity and does not deliver the stall-speed reduction required for short-field operations. As a result, Concept A was considered a useful baseline, but not a final viable solution.

2.2.2 Concept B – Single-Slotted Flap (Hydraulic Actuation)

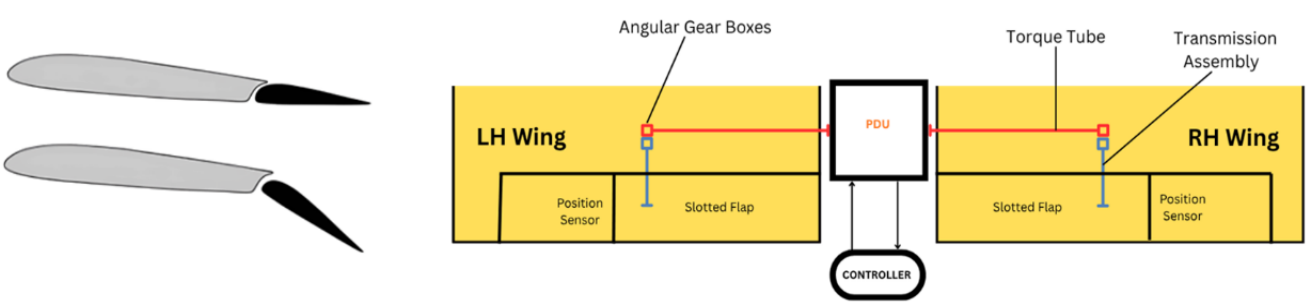

Figure 3: Concept B- Single Slotted Flap System [5]

Concept B in Figure 3 introduces a slot between the wing trailing edge and the flap, delaying separation and increasing lift. Aerodynamically, this configuration performs significantly better than a split flap and can meet many light-aircraft high-lift requirements. However, it relies on a hydraulic Power Drive Unit, lines, for actuation. For an agricultural aircraft, exposure to

fertilizer, dust, and moisture makes hydraulic systems vulnerable to leaks, seal degradation, and contamination-driven failures [6]. While geometry is feasible, the maintenance burden and environmental susceptibility made this concept less attractive for AADI-2004.

2.2.3 Concept C – Double-Slotted Flap

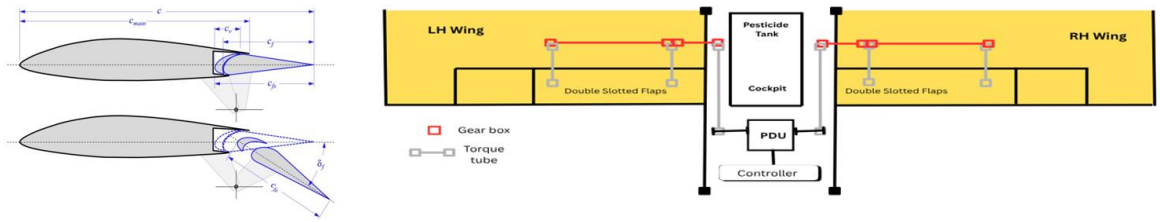

Figure 4: Concept C- Double Slotted Flap System [7]

Figure 4 uses two movable elements and two slots to produce very high CLmax, like transport-category aircraft. For the AADI-2004, this configuration could theoretically provide excellent STOL capability. In practice, though, it demands multiple tracks, linkages, and reinforced structure, increasing weight and complexity. Packaging the mechanism within the existing trailing-edge volume is challenging, and the structural impact on the rear spar and ribs is significant. Given the size and mission of AADI-2004, the added complexity and manufacturing effort were not justified by the incremental performance gain.

2.2.4 Concept D – Single-Slotted Fowler Flap (Electric Jackscrews)

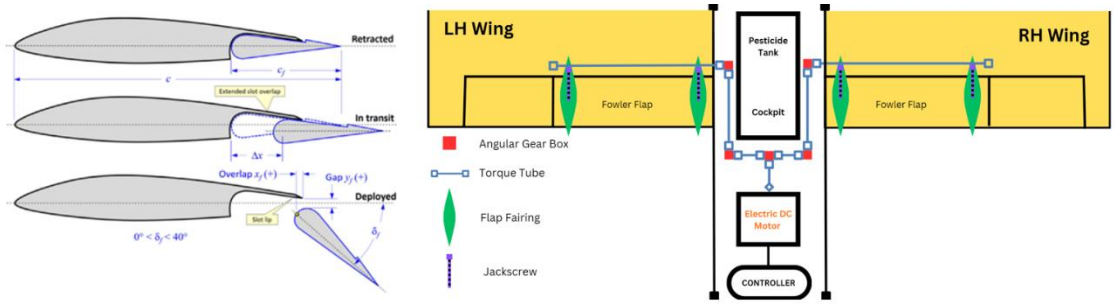

Figure 5: Concept C- Double Slotted Flap System [7]

The Fowler flap system in Figure 5 above combines deflection with aft translation to increase both camber and effective wing area. Concept D implements this using tracks and roller carriages driven by electrically powered jackscrews, synchronized by torque tubes and right-angle gearboxes. This configuration delivers a strong lift increase and matches the AADI-2004's trailing-edge geometry. Electric actuation avoids hydraulic fluid contamination issues and can be sealed against dust and chemicals. The mechanism fits behind removable fairing panels, preserves access for maintenance, and aligns with the typical high-lift solutions used on agricultural and STOL aircraft. This made Concept D the most promising candidate even before formal scoring.

2.2.5 Weighted Trade Study

To move beyond qualitative comparison, a weighted trade study was performed. Each concept was scored against a set of criteria including aerodynamic performance (lift and stall-speed reduction), integration with existing wing structure and systems, mechanical and actuation complexity, maintainability, reliability and environmental robustness, weight, and manufacturability. The highest weights were assigned to emphasize STOL performance, structural

and system integration, weight, and reliability in agricultural service. The resulting normalized scores are summarized in Table 2.2.5.

Table 2.2.5: Weighted Trade Study Summary

Concept	Description	Total Score
A	Split flap	2.95
B	Single-slotted flap (hydraulic)	3.60
C	Double-slotted flap	3.30
D	Single-slotted Fowler flap (electric)	3.75

Concept D achieved the highest score, mainly due to its strong aerodynamic performance, clean geometric integration, and good compatibility with electric actuation and sealed mechanisms. Concept B scored reasonably well but was penalized for hydraulic contamination risk and maintenance demands in an agricultural environment. Concept C benefitted from high lift but lost points for structural and mechanical complexity, while Concept A underperformed on STOL performance, and was heavily penalized as a result.

The trade study results, combined with the qualitative assessment of mission suitability, led to the selection of the single-slotted Fowler flap with electric jackscrew actuation as the preferred configuration for the AADI-2004.

2.3 Selected Concept

The chosen flap type for AADI-2004 is a Single Slotted Fowler Flap. Single Slotted Fowler Flaps offer one of the highest lift enhancements during take-off and landing, making them well-suited for STOL performance requirements.

The AADI-2004 flap extension-retraction system is driven by a single direct current (DC) electric motor which drives four jackscrews through a system of torque tubes and right-angle gearboxes. When the flap lever in the cockpit sends an electrical command, the DC motor rotates the torque tubes and gearboxes, producing rotational motion at the four jackscrew heads inside the wing. The rotational motion from the jackscrew drives a ball nut along a ballscrew shaft which converts all rotational motion into linear displacement. The linear displacement moves a carriage along a fixed track, which deflects the flap to the desired flap angle. Each flap uses two jackscrews, and the flap system is mechanically linked to synchronize the extension and retraction on both wings.

This design offers the best balance between aerodynamic performance, feasibility of integration, mechanical robustness and reliability for an agricultural aircraft. An analysis performed in Deliverable 4 found that the geometry of the AADI-2004 Fowler Flap provided the required increase in lift during takeoff and landing phases of flight. The lift-coefficient analysis in Deliverable 4 indicates a maximum lift coefficient of approximately $C_{L_{max}} \approx 3.11$, with a projected 23% reduction in stall speed when compared to the clean configuration with a maximum lift coefficient of $C_{L_{max}} = 1.81$ [8]. These values directly support the requirement that the AADI-2004 must remain a STOL agricultural aircraft.

The integration of the flap mechanism with the aircraft's electrical and avionics systems remains rudimentary. The design utilizes detented cockpit flap lever, dual-sensor position monitoring, VFE lockout, removable trailing-edge panels, and a Garmin G3X as a part of the pilot

alert system. All these design additions match the intent of the initial system-level requirements and maintenance accessibility constraints laid out to the team.

Overall, this flap extension-retraction system was selected for integration into the AADI-2004 because it satisfied mission-critical aerodynamic objectives, minimized structural disruption to the wing and offered reliable operation in the demanding environment of agricultural aviation.

3.0 System Overview

The single slotted Fowler flap, deemed the most effective for agricultural aircraft, optimizing lift for take-off and drag for landing. The transmission consists of nine gearboxes and ten torque tubes, activated by an electrical signal from the cockpit lever to the flap motor. This action rotates the torque tubes and gearboxes sequentially, providing movement to the four jackscrew heads within the wing.

When the torque tube attached to each jackscrew head rotates, it drives the ball nut along the ballscrew shaft, converting rotational motion into linear displacement. This linear motion is transmitted to the carriage, which travels along a fixed track system using rollers, deflecting the flap to the angle commanded by the pilot.

3.1 Conceptual Flap Geometry and Kinematics

The aircraft utilizes a single-element slotted Fowler flap to achieve the required high-lift capability during take-off and landing. The flap spans approximately 55 % of the wingspan and has a chord ratio of 0.30, corresponding to a flap chord of about 2.14 ft per wing. During deployment, the flap undergoes an initial aft translation of approximately 15% of the wing chord, followed by a downward rotation to a maximum deflection of 40°, producing both an increase in effective wing area and camber. A small geometric overlap of 3% chord is maintained between the main wing and the flap to ensure efficient slot flow and delayed separation at high angles of attack. Actuation is achieved through a central DC motor driving spanwise torque tubes, right-angle gearboxes, and jackscrews, ensuring synchronized and mechanically linked motion of both flaps. This configuration provides a structurally efficient, aerodynamically effective, and mechanically robust solution for low-speed performance enhancement [9].

3.2 Aerodynamic Analysis

3.2.1 Lift and Drag Estimation

The aerodynamic forces on the flap-implemented wing are governed by the standard relationship:

$$L = \frac{1}{2}\rho V^2 A C_L, \qquad D = \frac{1}{2}\rho V^2 A C_D \qquad (3.2.1)$$

Where $\rho = 0.002377\ slug/ft^3$ is the density, $V = 101.3\frac{ft}{s}$ $(60\ kt\ take-off\ speed)$ is the airspeed, $A = S_{eff} = 125\ ft^2$ is the effective planform area, and $C_L\ and\ C_D$ are the sectional lift and drag coefficients respectively [7]. Substituting the calculated parameters gives aerodynamic forces of 16,120 lb-f in lift and 3,184 lb-f in drag at $C_{L_{max}} = 3.11\ and\ C_D = 0.614$ for the 40° single slotted fowler configuration. Flap deflection modifies the aerodynamic performance through two main mechanisms:

1. Lift augmentation: Deploying the single-slotted Fowler flap (30 % chord ratio, 55 % span coverage, 3 % overlap, 1.07 ft aft translation) increases both camber and planform area. $C_{L_{max}} = 3.11$ rises from 1.81 (clean) to 3.11 (at 40°), a +1.30-increment consistent with published Fowler-flap data [10]. The slot re-energizes the boundary layer, allowing delayed separation and higher attainable lift before stall.
2. Drag increase: The same deflection raises the minimum drag coefficient from $C_{D\circ,clean} = 0.02\ to\ C_{D\circ,flaps} = 0.09$, and the Oswald efficiency decreases from 0.83 to about 0.70, giving total C_D of 0.651 and C_L of 3.11.
3. This corresponds to roughly 3.2 k lbf of drag, producing an L/D of 5.1, typical of landing configurations for medium-aspect-ratio GA wings [11].

3.2.2 Stall Speed Reduction and Field Performance

$$V_s = \sqrt{\frac{2 * W}{\rho . S . C_{L_{max}}}} \qquad (3.2.2)$$

Where the clean configuration: $\left(C_{L_{max}} = 1.81, S = 392\ ft^2\right), V_{s,clean} = 74\ kts, and\ flaps\ at\ 40^{\circ}\ \left(C_{L_{max}} = 3.11,\ S_{eff} = 425\ ft^2\right), V_{s,flap} = 57\ kts.$ The 23% stall-speed reduction translates to an approximate 40-45% reduction in take-off and landing distance, since ground roll scales with V_s^2. At 60 kt, the flap system generates the full required lift (16.1k lb-f), confirming sufficient margin for rotation and lift-off under sea level conditions [1].

3.3 Structural and Actuation Sizing

Accurate sizing is critical to the flap system, ensuring the structure withstands the higher aerodynamic and actuation loads while maintaining the required performance.

3.3.1 Aerodynamic Loading

The flap configuration was sized from the aerodynamic and kinematic parameters of the AERO 3002 wing design.

- Wing Planform area: $S = 392\ ft^2$
- Wingspan: b = 55 ft →Aspect ratio (AR)= $\frac{b^2}{S}$ =7.0
- Mean chord: c = 7.13 ft
- Flap geometry: Flap span ratio $\beta = 0.55 \longrightarrow b_f = 0.55 * b_{exposed} = 34.93\ ft,$ flap chord $c_f = 0.30c = 2.14\ ft,$ fowler translation $\Delta c = 1.07\ ft\ (15\%\ of\ c),$ overlap o = 0.03c = 0.21 ft.
- The effective area with flaps deployed is: $S_{eff} = S[1 + \beta(x - o)] = 425.0\ ft^2$

  This area and camber govern the loads and actuation requirements in the landing configuration. At the global level, more than 50 % of the major components are sized. Each flap panel (one per wing) covers ≈ 17.5 ft span by 2.14 ft chord, giving a flap area per wing of:

$$S_{f,one} = \frac{1}{2}\beta S\left(\frac{c_f}{c}\right) = 41\ ft^2$$

Three hinge stations per wing are assumed, evenly spaced along the flap span, to distribute loads into the rear spar. Motion is transmitted by spanwise torque tubes with right-angle gearboxes driving four jackscrews with ballscrew nuts per wing. A single central DC electric motor provides input torque and ensures synchronized deployment of both flaps. Hinge moments are estimated at the landing sizing condition (40°, sea level, 60 kt, V=101.3 ft/s. The dynamic pressure is:

$$q = \frac{1}{2} * \rho * V^2 = 12.2\ lbf$$

The per-wing hinge moment is modelled as:

$$M_h = qS_f c_f C_h$$

Where $C_h = 0.03$ non-dimensional coefficient, a typical value for landing-deflection single slotted fowler flaps [11]. Substitution gives $M_h = 32\ lbf.ft, and\ 64\ lbf.ft$ for both wings. The flap self-weight is estimated using an aerial density of $\sigma_s = 2.5\ lb/ft^2$ for aluminum skin and rib construction plus a mechanism allowance of $\sigma_m = 0.8\ lb/ft$ along the flap span. For one wing,

$$W_{flap,one} = \sigma_s S_{f,one} + \frac{\sigma_m b_f}{2} = 115\ lb.$$

or 230 lb for both wings. This is less than 2% of the 14000 lbf gross weight, as designed in AERO 3002 and is acceptable within the global mass budget. [H6]

3.3.2 Actuator Torque

Assuming an effective bell-crank / sector arm of r = 0.30 ft between actuator force line and hinge axis, the required actuator force per wing is

$$F_{act} = \frac{M_h}{r} = 110\ lbf$$

This arm length is consistent with a compact sector plate mounted near the rear spar, and the resulting force is within the capability of common GA-scale electrical actuators [H5].

Applying a 1.5 safety factor for friction, asymmetry, and maneuver increments, the design system torque becomes:

$$M_{h,design} = 1.5 * 64 = 96\ lbf.ft$$

3.3.3 Actuator Power Sizing

To achieve full 40° deployment in approximately 5 seconds, the flap angular rate is:

$$\dot{\delta} = \frac{40^\circ}{5s} = 0.14\ rad/s$$

Mechanical output power:

$$P_{mech} = M_{design}.\dot{\delta} = 96(0.14) = 13.4\ W$$

Assuming 70% electromechanical efficiency, required electrical input is:

$$P_{elec} = 19.2\ W$$

This confirms that a compact 28 V DC aerospace-grade actuator is sufficient.

Flap motion is transmitted from the central DC actuator through a mechanically synchronized system consisting of spanwise torque tubes, right-angle gearboxes, and dual jackscrews per wing. The design actuator torque of 96 lbf·ft is split symmetrically between the

wings, resulting in approximately 48 lbf·ft per wing, and further divided between the two jackscrews on each side. This ensures that no single linkage element carries the full aerodynamic load, improving load sharing and fatigued life. The torque tubes enforce passive mechanical synchronization, reducing the risk of asymmetric flap deployment under normal operation. Gearboxes redirect and distribute torque efficiently into the jackscrews, which convert rotary motion into controlled linear translation of the Fowler tracks. The linkage system is sized with conservative margins to accommodate transient torsional wind-up, inertial effects during deployment, and local friction variations.

3.3.4 Structural Interfaces

From the landing configuration and sizing analysis described in Section 3.3.1, each wing carries a flap area of roughly 41 ft² and hinge moments near 32 lbf·ft. This establishes the baseline forces entering the hinge line and the Fowler mechanism.

Figure 6: Structural Load Path for Wing-Flap Attachment

Figure 6 above illustrates the load path from the flap surface into the primary wing structure. As the flap deflects and translates aft during operation, aerodynamic loads are transmitted into the roller carriages and then into the track rails, which carry the resulting vertical shear, chordwise reactions, and friction loads. These rails attach to reinforced support ribs that distribute the loads into the trailing-edge wing structure. Because these ribs are relatively thin and experience repeated loading cycles, doublers or load pads are used to prevent cracking or local distortion. The loads then pass into the rear spar, the primary element resisting flap-induced bending and shear, where local reinforcement at hinge stations ensures that concentrated bearing stresses remain below allowable values.

To confirm the wing and flap interfaces can withstand these forces, the hinge and track reactions from the 32 lbf·ft hinge moment and estimated flap self-weight were resolved into spar and rib loads using simple beam assumptions. The resulting bending and shear stresses remained within the material limits of 7075-T6 with the required 1.5 safety factor, and fastener bearing and shear checks at hinge and track L-brackets were below allowable NAS fastener limits. These results, combined with the CAR 525.701 asymmetric case, 100 percent load on one wing and 80 percent on the other [12], show that the reinforced ribs, and spar pads provide sufficient strength and stiffness for both symmetric and off-nominal conditions. The jackscrew actuator introduces an additional axial load into its mounting rib, and its installation is stiffened to avoid side-loading the tracks or producing uneven travel.

Because agricultural aircraft operate in dusty, wet, and chemically corrosive environments, the structural interface incorporates sealed bearings, corrosion-resistant fittings, and protective coatings on contact surfaces. The mechanism sits behind removable fairing panels, allowing hinge pins, roller carriages, and actuator parts to be inspected or replaced without major disassembly. Together, these features ensure that the flap loads follow a predictable and robust structural path into the wing and that the interface maintains durability and reliability under the operational demands of the AADI-2004.

3.4 Electrical Integration

The flap actuation system is supplied by the aircraft's 28 VDC primary electric motor, commonly used in light and agricultural aircraft [13]. Power originates from the engine-driven generator and is supported by the onboard battery system to maintain voltage stability under transient conditions. The actuators receive power through the circuit breakers and current limiters [13], ensuring that if an electrical failure were to occur, it is isolated from the entire system, preventing catastrophic failure; based on the distribution philosophy that faults must not affect other users [13]. All wiring terminations are bonded to the airframe to maintain proper grounding [13], reducing risk of arcing and electrical hazards [13].

Each actuator utilizes limit switches to interrupt current at full travel [13], this prevents mechanical over-run and uncommanded motion. The system uses busbars for distribution and fault isolation [13]. Together, these electrical protection and grounding measures ensure reliable operation of the flap control system and restrict failures from compromising flight functions.

3.5 Avionics and Human-Machine Interface

The flap system's human-machine interface provides the pilot with direct control and continuous feedback during take-off, landing, and low speed operations. A detented flap lever, which is mounted on the left cockpit console [3] commands pre-set angles ranging from zero degrees to 40 degrees in ten-degree increments [3]. This lever is the only input pilot input to the flap control system. When the lever is moved, it sends an electrical command to the Flap Control Unit, driving the electric motor to deflect the angles to the commanded input value [13].

Flap position sensors provide real-time feedback on the Garmin G3X interface, showing the current flap angle, synchronized deployment, and system warnings [3]. A "FLAP ERROR" annunciation is triggered in a situation where a sensor faults, command is lost, or jam is detected within the system [3]. To protect the structure of the wings and aircraft during high speed and pressure conditions, the airspeed sensor inhibits flap actuation, and is interfaced with the Flap Control Unit, in situations such as spraying operations [3].

A limit switch placed on the flap track interrupts the motor circuit when the flap reaches its end of travel position, which prevents over-travel [2]. If an electrical failure occurs, a manual override mechanism allows the pilot to reposition the flaps to maintain limited control authority.

3.6 Systems Safety and FMEA Summary

The flap system represents a flight-critical subsystem due to its direct influence on stall speed, controllability, and take-off and landing performance, particularly for the low-altitude agricultural mission profile of the aircraft. To evaluate and control the associated risks, a formal Failure Modes and Effects Analysis (FMEA) was conducted on the electro-mechanical and hydro-mechanical portions of the Fowler flap actuation system. The scope of the analysis included the central drive motor, torque tubes, right-angle gearboxes, jackscrews with ballscrew nuts, hinge fittings, track and carriage mechanisms, couplings, bearings, and mechanical end-stops. The objective of the FMEA was to systematically identify credible failure modes, evaluate their effects on aircraft safety and mission performance, assess their risk levels using the project risk matrix, and define mitigation measures that suppress all unacceptable risks to acceptable levels. Table 3.6 below contains some of the subsystems not taken into consideration in the flap system.

Table 3.6: Other Subsystems within the AADI-2004 Flap System

Subsystem Code	Subsystem	Responsibility
FS-EP	Electrical/Power	Responsible for power distribution for the flap motor, includes components such as circuit breakers, wiring harness, switches, and relays.
FS-CS	Control & Sensor	Responsible for flap position sensors, feedback sensors within the entire system, and air speed movement inhibitors.
FS-M	Maintenance	Responsible for access panels, timelines for lubrication of equipment, and inspection requirements.
FS-E	Environment	Responsible for seals and covers, protective layers for corrosion, and debris shields.
FS-FS	Fail-Safe	Responsible for ensuring the flap system remains controllable during faults, including components such as mechanical stops, brakes, and limit switches to prevent unsafe or asymmetric deployment

Table 3.7 provides the FMEA summary conducted for the electro-mechanical subsystem, identifying failure modes within the jackscrew heads, torque tubes, gearboxes, bearings, hinges, and track assemblies. Table 3.8 shown after presents the risk matrix.

Table 3.7: FMEA for Electro-Mechanical Subsystem

FMEA No	1								Sheet No. 1
Project No. FP									Prepared By: Hashan & Abdul
System No. FS-01									Checked By: Arshia
Subsystem No. FS-HM									Approved By: Ibraheem
Prob. Interval: NA		Failure Modes, Effects, and Criticality Analysis							Date: 17-11-2025
Target Code: P - Personal, E - Equipment, T - Downtime, R - Products, D - Data, V - Environment									
						Risk Assessment			
ID No.	Item/ Functional ID	Failure Mode	Failure Cause	Failure Event	Target	SEV	PROB	RISK Code	Action Req'd
HM-01	Jackscrew + ballscrew nut	backlash / wear	Poor lubrication, Contamination, misalignment	Asymmetric flap position between wings → roll/yaw transient on approach or landing; degraded controllability in low-speed regime	P, E, R	II	C	3 (Permissible)	Add contamination boots, defined lubrication interval, backlash limit in AMM, scheduled inspection for play at jackscrew.
HM-02	Jackscrew	Jam/Seizure	Corrosion, contamination, thread damage, loss of lubrication	Flap stuck (e.g., at 40°) → high drag, degraded climb/go-around performance	P,R	II	B	2	Use corrosion-resistant materials/coatings, protective bellows, torque-limit clutch, smooth-travel check in heavy maintenance.
HM-03	Torque tube	Torsional shear / fracture	Over-torque beyond design, material flow, impact damage	One wing flap moves, other remains fixed → severe asymmetry → potential loss of control near stall	P,E	I	B	3	Size tube for ≥1.5 ultimate torque, introduce shear-pin or symmetric fail-safe, visual inspection of tube in flap bay, avoid hidden damage (no jack-lifting under tube, etc.).
HM-04	Right-angle gear box	Gear tooth strip/shear	Overload at end - stop, poorr lubrication, misalignment	Loss of drive on one side → flap asymmetry (one side lags or stops)	P,E,T	II	D	2	Hardened gears, verified lubrication schedule, torque-limit/clutch upstream, inspection of gearbox for metal debris at checks.
HM-05	Gearbox bearings	Bearing seizure / very high friction	lubricant loss, contamination,corrosion	High torque → motor may stall, flap stops in transit; potential temporary asymmetry	E,T	III	C	3	Use sealed bearings, define grease/ replacement interval, add maintenance check for abnormal drive torque/noise.
HM-06	Flap hinge bracket/fittings	fatigue crack, yielding, or fastener pull-through	High Cycle loading, incorrect torque, local stress concentration	Loss of stiffness → flap vibration / flutter, possible partial flap detachment in extreme case	P,E	I	A	3	7075-T6 or equivalent high-strength fittings, conservative stress margins, NDI (e.g., dye-pen) at major inspections, documented hinge-bolt torque procedure.
HM-07	Mechanical end-stop	Stop deformation/fracture	Limit switch failure causing repeated hard-stop hits, under-designed stop or bolts	Deformed stop or associated linkage → next cycles may jam → asymmetric flap or reduced travel	E,T,R	II	C	2	Size stop/bolts for full stall torque with margin, dual protection (limit switch + over-current cut), visual inspection of stops and mounting hardware in maintenance schedule.
HM-08	Torque tube coupling / spline	Slip or spline strip	Fretting, corrosion, insufficient clamp torque	Flap does not reach commanded angle on one side → asymmetry or reduced CL	E,R	III	B	3	Keyed or pinned coupling, torque-mark paint, anti-corrosion treatment, specified torque + re-torque interval in AMM.
HM-09	Jackscrew support bearing / bracket	Bearing block loosens or pulls out	Fastener loosening, inadequate edge distance, bracket fatigue	Jackscrew misalignment → high friction or jam → stuck flap and/or asymmetry	E,T,R	II	B	3	Double-shear bracket, lock-bolts or lock-nuts, structural check (FEA) for margins, torque-check of bracket fasteners at heavy checks.
HM-10	Fowler track + carriage/rollers	Binding/high friction	Dirt, corrosion, track bending from hard landing, lack of lubrication	One flap slows or stops mid-travel → temporary asymmetry and possible unexpected drag profile	E,T,R	II	D	2	Hard-anodized track, contamination shields, defined lubrication interval, rigging check for free travel (manual force test), inspection of rollers for flat spots.
HM-11	End-of-travel limit switch	Switch fails stuck closed	Contact welding due to arcing, moisture ingress, aging	Flap drives into mechanical end-stop causing high shock loads; potential gearbox or jackscrew damage leading to later asymmetric deployment	E,T,R	II	C	2	Dual end-of-travel protection (limit switch + over-current cutoff), environmental sealing of switches, functional stop-test at inspection intervals
HM-12	End-of-travel limit switch	Switch fails stuck open → premature stop command	Broken conductor, connector corrosion, vibration damage	Flaps stop short of commanded angle (e.g., 25° instead of 40°) → reduced landing lift, higher stall speed than expected	P,R	II	C	2	Redundant position sensing, FLAP POSITION mismatch annunciation, pre-landing verification of achieved flap angle
HM-13	Flap system wiring harness	Intermittent open circuit due to wire chafing	Inadequate strain relief, vibration, poor routing near structure	Flap motion stops intermittently during deployment; asymmetry possible if interruption occurs mid-travel	P,E,T,R	I	C	2	Protective conduit routing, proper strain relief, bonding and grounding checks, periodic harness inspection in flap bay
HM-14	Flap Control Unit (FCU)	Software logic fault → flap inhibited at all speeds or not inhibited at high speed	Coding error, corrupted update, EMI upset	If permanently inhibited: no flap available for landing; if not inhibited: flap deployment at excessive speed → high hinge loads and structural risk	P,E,R	II	B	1	Software validation checks, hardware airspeed cutout interlock, FCU power-reset procedure, cockpit FLAP INHIBIT annunciation

Table 3.8 : Risk Matrix for Electro-Mechanical Subsystem

Severity of Consequences	Probability of Mishap					
	A IMPOSSIBLE	B IMPROBABLE	C REMOTE	D OCCASIONAL	E PROBABLE	F FREQUENT
I CATASTROPHIC	3	3	2	1	1	1
II CRITICAL	3	3	3	2	1	1
III MARGINAL	3	3	3	3	2	1
IV NEGLIGIBLE	3	3	3	3	3	2

The 4×6 risk assessment matrix is used to classify each identified failure mode based on its severity (S = 1–4) and probability of occurrence (P = 1–6). The resulting risk value R=S×PR = S \times PR=S×P is used to categorize failures as acceptable, permissible, or waiver required. Green regions represent acceptable risks with low severity or likelihood, orange regions represent permissible risks requiring monitoring, and red regions represent waiver-required risks that would demand redesign. When the failure modes from the FMEA were mapped onto this matrix, the majority fell within the acceptable region, with only a small number entering the permissible zone, and none reaching the waiver-required region. This indicates that the electro-mechanical flap subsystem operates within controllable risk limits without requiring additional design mitigation at this stage.

4.0 Engineering Drawings

The engineering drawings below provide a 2D representation of the AADI-2004 Fowler flap system, directly from the finalized CAD model and consistent with ANSI drawing standards. These drawings show the aircraft, flap, wing geometry, mechanism locations, track layout, and actuation interfaces, along with all major dimensions needed to support integration with the wing structure. The drawings also illustrate the mechanism's placement within the trailing-edge volume without the fairings to show the clearances required for maintenance access and actuation travel.

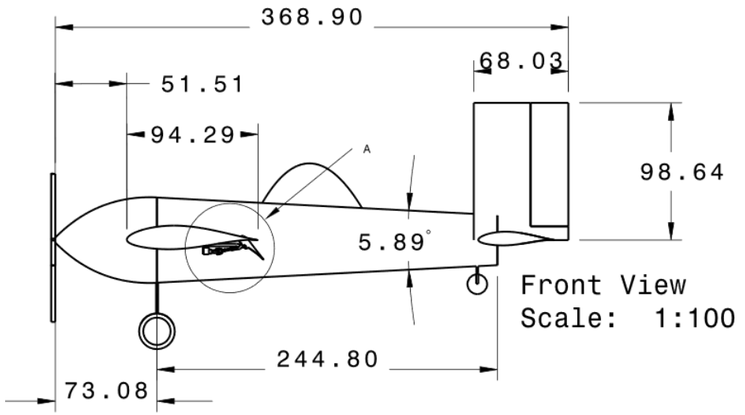

Front View
Scale: 1:100

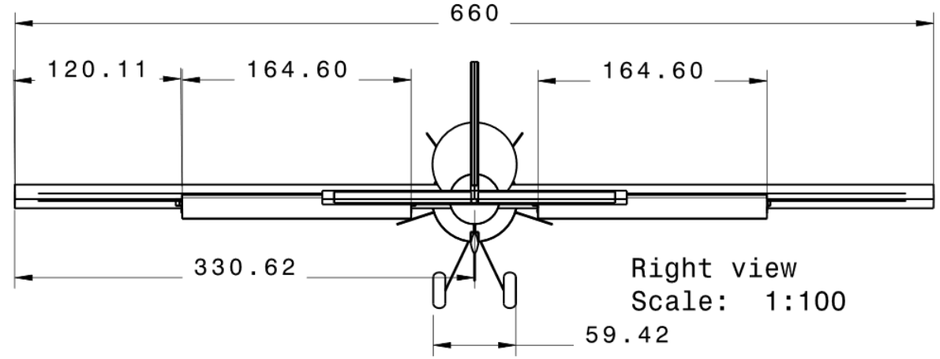

Right view
Scale: 1:100

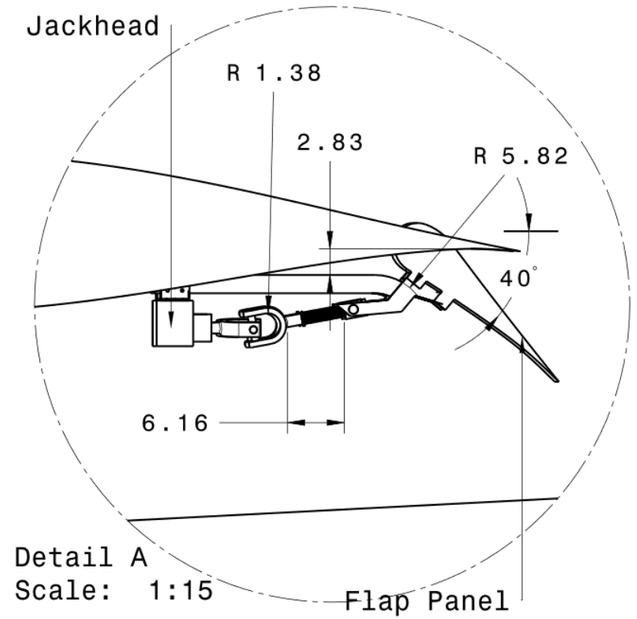

Detail A
Scale: 1:15

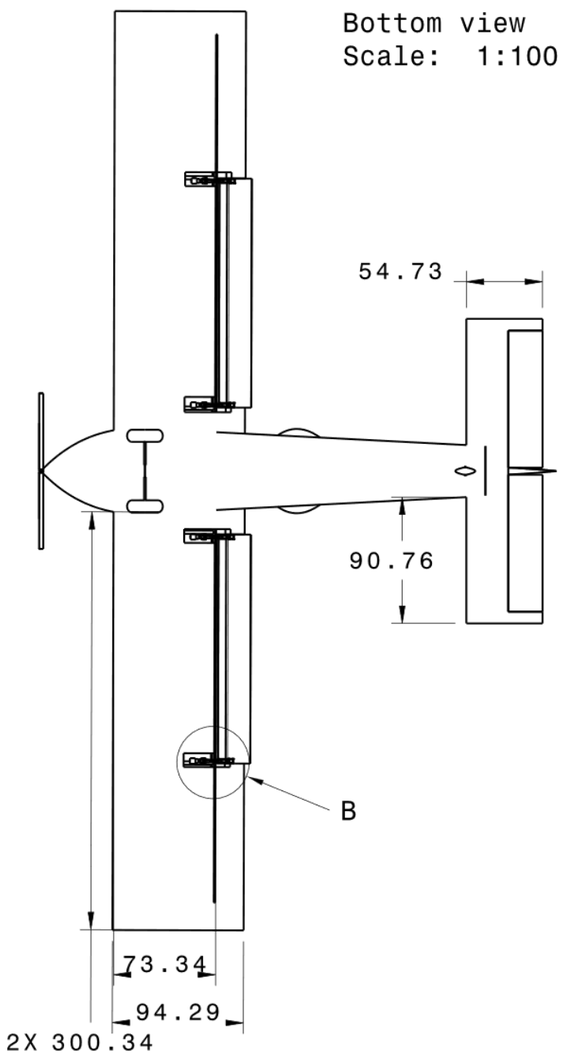

Bottom view
Scale: 1:100

AADI-2004 with Single Slotted Fowler Flap System Deployed at Max Angle Isometric view
Scale: 1:150

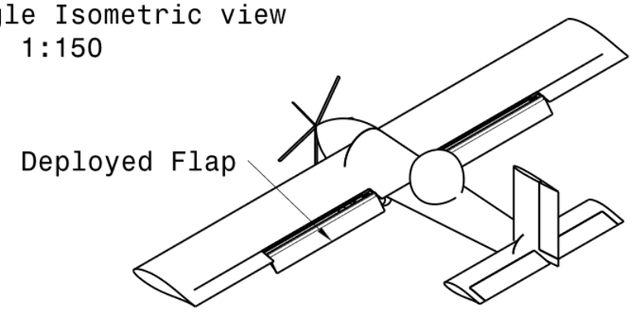

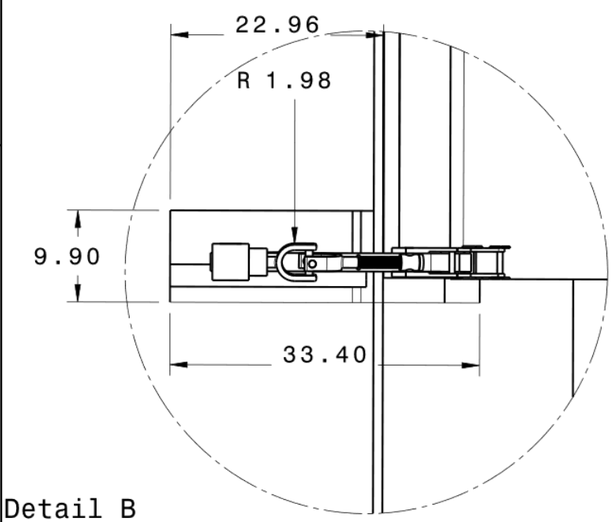

Detail B
Scale: 1:15

BILL OF MATERIALS

ITEM	PART NAME	MATERIALS	QTY
1	FLAP PANEL	2024-T3 Alclad	2
2	TRACK RAIL	2024-T3	4
3	CARRIAGE	STEEL 4130	4
4	ROLLER	STAINLESS 17-4PH	4
5	FLAP CONNECTOR	ALUMINUM 7075-T6	4
6	TRACK TO RIB CONNECTOR	ALUMINUM 2024-T3	8
7	JACKHEAD TO TRACK CONNECTOR	STEEL 4130	8
8	BALLSCREW SHAFT	STEEL 4140 / 4150 (HARDENED)	4
9	BALL NUT/JACKHEAD	STEEL 4140 (NITRIDED)	4
10	FASTNERS A/R	NAS / AN STANDARD STEEL	A/R
11	REAR SPAR REINFORCEMENT	ALUMINUM 2024-T3	2

NOTES
1) ALL DIMENSIONS ARE IN INCHES UNLESS OTHERWISE SPECIFIED.

	PROJECT: AERO 4003 DESIGN PROJECT			
AADI 2004	DRAWING TITLE: AADI-2004 STOL AIRCRAFT WITH DEPLOYED FLAP			
CHECKED	DRAWN BY: PARTICLE DISTRIBUTORS			
APPROVED	DATE: 17-11-2025	SHEET NO: 1 OF 2	SCALE: AS SHOWN	DWG NO: FS-01
AUTHORIZED				

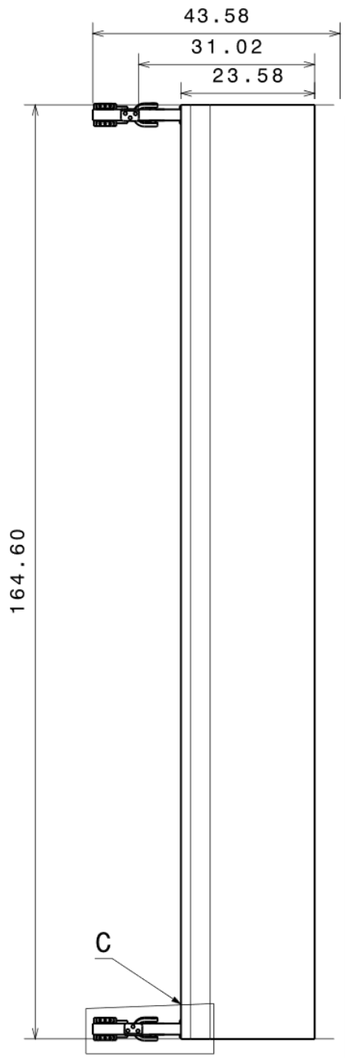

Top view
Scale: 1:25

Isometric view
Scale: 1:40

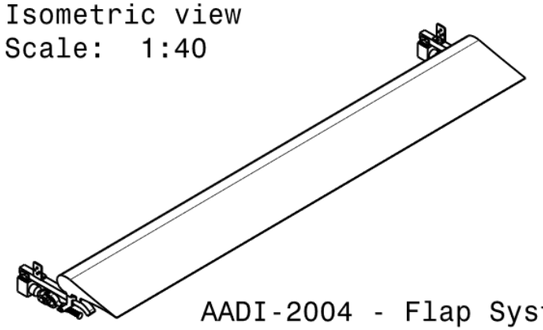

AADI-2004 - Flap System
Clean Configuration

Detail A
Scale: 1:10

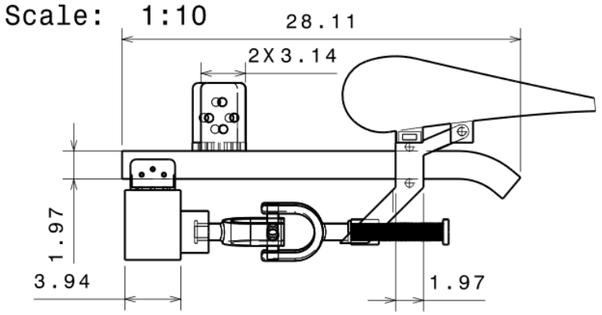

Actuation, and Attachment Mechanism
Isometric view
Scale: 1:5

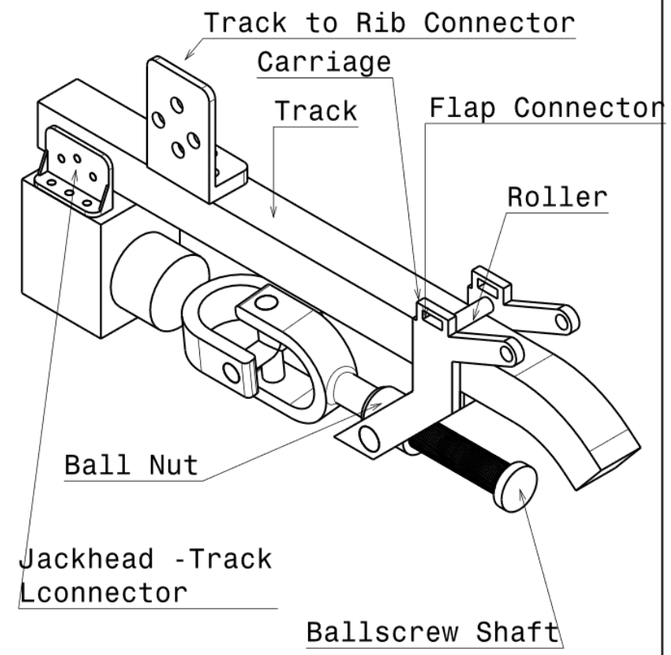

Isometric view
Scale: 1:50

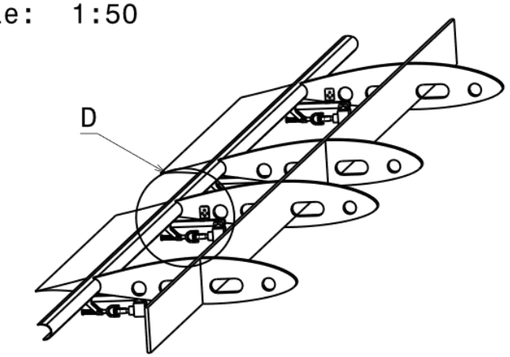

Reinforced Track to Rib Connector

Modified Rib

Detail D
Scale: 1:10

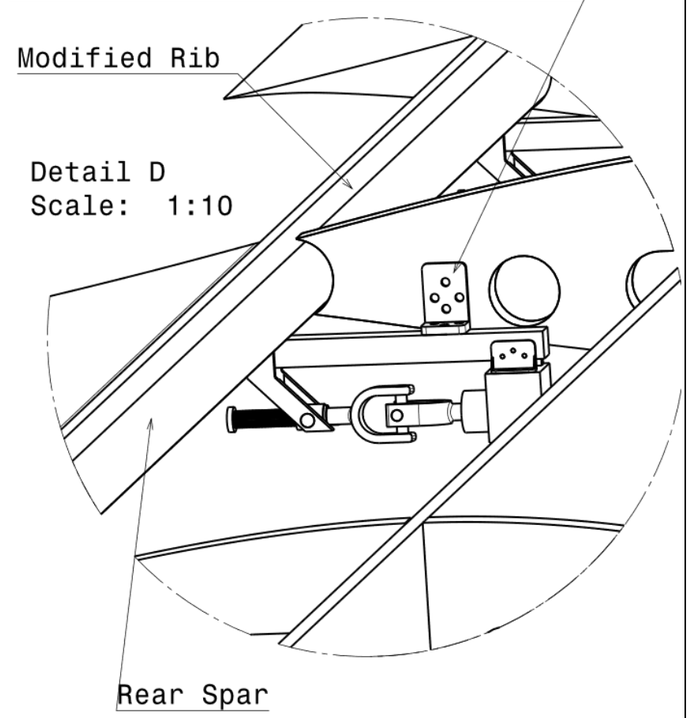

Rear Spar

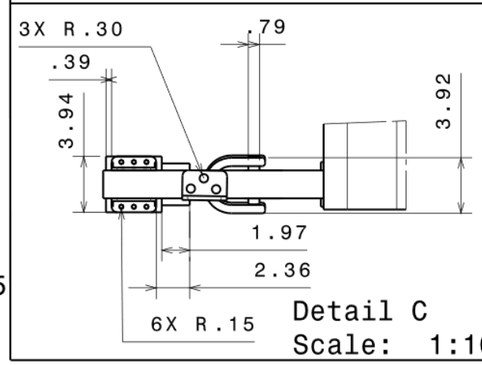

Detail C
Scale: 1:10

NOTES
1) ALL DIMENSIONS ARE IN INCHES WITH A GENERAL TOLERANCE OF ±0.02 IN UNLESS OTHERWISE SPECIFIED.
2) TRACKS, ROLLERS, AND THE JACKSCREW ASSEMBLY MUST ALLOW SMOOTH, BIND-FREE TRAVEL THROUGH THE FULL FLAP DEPLOYMENT RANGE.
3) TRACK-TO-RIB AND FLAP-TO-RIB CONNECTORS USE AIRCRAFT-GRADE FASTENERS, WITH LOCAL RIB REINFORCEMENT AS SHOWN IN DETAIL D.
4) MAINTAIN A MINIMUM 0.12 IN CLEARANCE TO THE REAR SPAR AT ALL DEPLOYMENT ANGLES, INCLUDING THE 40° DESIGN PGN POSITION.
5) MOVING COMPONENTS REQUIRE GREASE LUBRICATION PER MIL-G-23827 AND CORROSION PROTECTION SUITABLE FOR AGRICULTURAL SPRAY EXPOSURE.
6) ROLLER AND CARRIAGE HOUSINGS MUST BE ALIGNED WITHIN 0.5° TO AVOID UNEVEN LOADING ALONG THE TRACK.

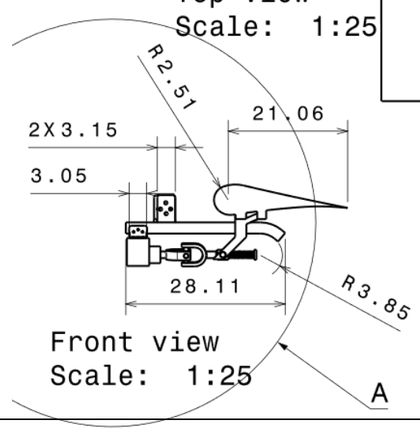

Front view
Scale: 1:25

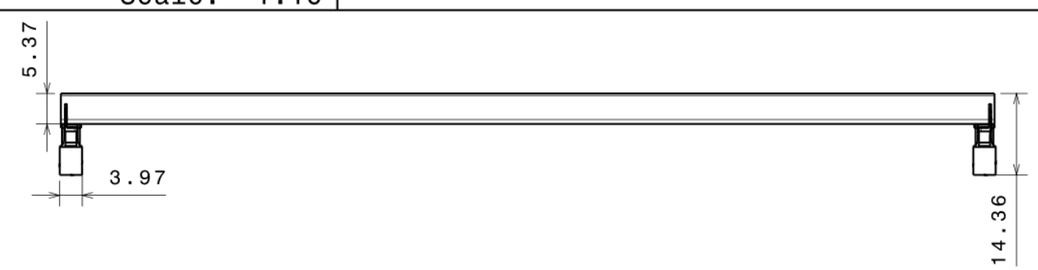

Left view
Scale: 1:25

Single slotted Fowler Flap System

AADI 2004	PROJECT: AERO 4003 DESIGN PROJECT			
	DRAWING TITLE: SINGLE SLOTTED FOWLER FLAP SYSTEM ASSY			
CHECKED	DRAWN BY: PARTICLE DISTRIBUTORS			
APPROVED	DATE: 17-11-2025	SHEET NO: 2 OF 2	SCALE: AS SHOWN	DWG NO: FS-01
AUTRHORIZED				

5.0 Evaluation of System Performance and Design Readiness

This design exercise requires a review of the results obtained throughout the project and evaluation of how well the proposed flap system satisfies the aerodynamic, structural, and operational requirements. The discussion begins with an interpretation of key findings from the different analyses completed. A feasibility assessment then examines whether the system can realistically be developed and manufactured. The remaining subsections outline the main limitations identified in the design, provide recommendations for improvement, and conclude with the team's overall judgment on system readiness.

5.1 Discussion of Results

The results presented so far indicate that the selected single-slotted Fowler flap system is well suited for the mission needs of the AADI-2004 aircraft. The aerodynamic modelling shows that the 30 percent chord Fowler configuration, spanning roughly 55 percent of the wing, delivers a substantial lift benefit. The maximum lift coefficient increases to 3.11 and stall speed is reduced by 23 percent relative to the clean wing configuration. These values fall within the expected range for Fowler flaps documented by standard high-lift references [8][11]. The projected reduction in takeoff and landing distances, on the order of 40 percent, betters the aircraft's STOL capability and provides a meaningful safety margin during low-speed spray runs.

The actuation and mechanical layout shown in the drawings also show strong compatibility with the aircraft's architecture. The hinge-line moment estimation, using a representative coefficient of $C_h = 0.03$, yields approximately 32 lb-ft per wing under normal landing conditions. The required actuator force of 110 lbf falls within the capability of general aviation electromechanical systems. Applying a structural safety factor of 1.5, CAR 525.303 requirement [5], keeps the design torque below levels commonly demonstrated in service for similar jackscrew-driven flap mechanisms. These early sizing calculations provide confidence that the mechanical subsystem is correctly scaled.

Several areas, however, require more work. Load sharing among the two jackscrews per wing was not quantified. Local stresses at the brackets, track attachments, and gearbox mounts also need detailed structural analysis, as these components experience fatigue and determine the overall fatigue life cycle of the system. System integration with the aircraft's electrical and avionics architecture is reasonable and considered suitable for the user. The detented cockpit lever, dual position sensors, VFE lockout logic, and G3X annunciation match the intent of CAR 523.699 and 523.701 [13] and provide a clear chain from pilot input to flap operation. The single-motor architecture simplifies weight and wiring, but limits jam recovery. Improving jam detection thresholds, current-based monitoring, or sensor disagreement logic would strengthen fault tolerance in the system.

The FMEA highlighted typical risks for agricultural aircraft, including jackscrew seizure, torque-tube wear, gearbox degradation, and hinge fatigue. The proposed mitigations are sealed bearings, corrosion-resistant finishes, lubrication schedules, and NDI intervals. These are appropriate, but the system will require validated sealing and drainage provisions to withstand environmental hazards.

Overall, the results show that the flap concept is well scaled and capable of meeting the aircraft's lift and controllability requirements. Further work is needed to quantify unsteady

aerodynamic loads, verify structural margins, assess load sharing within the actuation system, and improve environmental robustness before the design can be considered fully ready for prototyping.

5.2 Feasibility Assessment

A feasibility review was completed by comparing the flap system performance, loads, integration requirements, and risk profile against the constraints defined throughout the term. The available evidence supports the idea that the design is feasible, after full validation.

From a requirements standpoint, the system satisfies all major geometric and functional constraints: the flap fits within the trailing-edge envelope, achieves the required 40-degree deflection, spans the allowable portion of the wing, and meets the system-level mass limit of 5 percent of wing weight. The arrangement of tracks, carriages, torque tubes, and jackscrews shown in the CAD drawing, Section 4, confirms the mechanism is packaged without interference with ribs, spars.

Preliminary load calculations show that the hinge moment, actuator torque, and reaction forces fall within the capability of commonly used 28-VDC electromechanical flap drives. This suggests that suitable hardware exists and that the actuation concept is realistic. The structural concept, reinforced ribs and rear spar with local fittings appears adequate to support the expected loads, but final feasibility depends on detailed stress analysis still to be completed.

Electrical and avionics integration is feasible. The system can interface with the aircraft's 28-V bus, and the proposed control logic (detents, flap-error annunciation, VFE lockout, and sensor redundancy) aligns with the intent of the applicable CAR 523 requirements [13]. Nothing in electrical architecture presents a feasibility barrier at this stage.

The risk assessment also supports feasibility. All identified failure modes fall within acceptable or permissible regions of the risk matrix in Table 3.8 once mitigations are applied. No failure mode demands a redesign of the core architecture.

Remaining feasibility questions relate to analysis completeness rather than design concept. Structural load-path verification, jackscrew load sharing, motor current and thermal limits, and environmental durability were not demonstrated and will need to be addressed before the next phase.

The flap system is feasible to build, integrate, and operate, and no major obstacles prevent it from progressing to detailed design. The outstanding analyses represent normal follow-on work rather than fundamental feasibility concerns. In addition, operational data from agricultural and STOL aircraft like Air Tractor AT-402B [15] shows that Fowler or single-slotted flaps with 30–40-degree deflection routinely achieve the lift levels and stall-speed reductions targeted for the AADI-2004. This alignment with established fielded designs reinforces that the proposed flap system is feasible for the aircraft's low-speed, high-lift mission profile.

5.3 Limitations

The flap-system as currently designed has several limitations that must be acknowledged. Many of these limitations arise from analyses that are incomplete, missing entirely, or carried out at a level lower than what is considered industry practice for flap-system development.

A primary limitation is the reliance on steady, simplified aerodynamic models. The lift, drag, and hinge-moment estimates presented so far do not include unsteady turbulent effects. In industry, manufacturers routinely assess flaps under propwash-dominated conditions using CFD, wind-tunnel data, or empirical correction factors. By comparison, the current analysis does not

capture dynamic stall, transient hinge loads, or slot-filling behavior, which can significantly increase peak loads and affect reliability. The absence of these higher accuracy validation methods introduces uncertainty into every load carried forward into structural sizing.

Structural validation is also incomplete. While preliminary hand calculations identify hinge forces and actuator torque, there is no finite-element analysis of hinge brackets, track attach points, reinforcing ribs, or gearbox mounts. In industry practice, these components are among the first to be validated using FEM because they experience concentrated loads, fatigue cycles, and local stress peaks. Designs for similar aircrafts like the AT-402B [15] include detailed rib cutouts, spar caps, attach fitting geometry, and thickness transitions. By contrast, the drawings provided here show only overall geometry and basic attachments, without specifying web thicknesses at each station, local stiffeners.

In addition, this report shares very limited understanding of load distribution within the actuation system. The mechanism uses two jackscrews per wing, but no stiffness-based load distribution model was developed. In real aircraft, even small differences in friction, lubrication age, thread wear, or gearbox backlash can shift loads disproportionately to one screw. Manufacturers typically perform deflection-based or torque-sensor-based modelling to ensure no single screw exceeds allowable limits. The absence of this analysis means the durability and reliability of the actuation chain cannot be assessed.

Operational limitations are equally significant. Deployment timing, motor current draw, gearbox efficiency, and thermal performance were not qualified. High-cycle agricultural aircraft often deploy flaps dozens of times per day, and electromechanical systems must be validated for heat rise, torque derating, and electrical load management. None of this information was obtained. The current single-motor architecture also presents a single point of failure. While common in GA designs, such systems typically incorporate torque-limiting clutches or jam sensors, neither of which have been validated for this design.

Environmental durability remains an unresolved issue. The present design proposes some sealing but does not yet define material specifications, coating systems, ingress protection, or drainage geometry. Without these provisions, long-term survivability of the jackscrews, roller carriages, and hinge fittings cannot be assured.

Finally, the engineering drawings provided are insufficient for structural, manufacturing, or tolerance assessment. The drawings show general geometry but do not include section thicknesses, fastener sizes, manufacturing notes, lubrication points, or exploded-view assemblies. The lack of this detail limits the ability to confirm manufacturability. While the report presents a level of detailed work, it lacks the aerodynamic fidelity, structural validation, environmental robustness, and engineering detail typically required for a flap system intended for agricultural operations. Addressing these limitations will be necessary before declaring the system ready for detailed design or prototype fabrication.

5.4 Recommendations

To progress the flap system toward a defensible detailed-design stage, several targeted improvements are recommended. These recommendations reflect what is achievable within a similar time frame and by advanced engineering students while still adhering to industry expectations for high-lift system development.

First, the aerodynamic modelling should be expanded beyond steady, clean-flow assumptions. Agricultural aircraft operate in strong propeller slipstream, turbulence, and rapid pitch changes, all of which influence slot flow and hinge loading. At minimum, a 2D unsteady

CFD study or a slipstream-corrected analytical model should be developed to refine lift increments, separation onset, and peak hinge moments. This added fidelity will reduce uncertainty in the loads used for structural sizing.

Second, the structural design should be validated using finite-element analysis. Industry practice is to model brackets, ribs, track fittings, and spar reinforcements with local mesh refinement, since these components often fail first under asymmetric or gust loads. The current design should be updated with a full rib–hinge–spar model to verify stress concentrations, confirm load paths, and quantify margins under both symmetric and CAR 525.701 asymmetric cases [5]. The drawings can also be updated with wall thicknesses, fastener specifications, and tolerances.

Third, load sharing in the actuation and transmission system must be assessed. A simplified torsional-stiffness model or torque-distribution diagram is recommended to evaluate how loads propagate through the gearboxes and torque tubes. This analysis is routinely performed in industry and is necessary to justify the system's expected service life.

Deployment timing, actuator current draw, and thermal performance should be estimated using manufacturer data for similar electromechanical actuators. A simple thermal model would allow the team to determine whether repeated takeoff-and-landing cycles during spraying operations could exceed allowable motor temperature limits.

Lastly, environmental robustness requires some additional attention. More operational and maintenance instructions can be finalized and stated at this stage. These additions are feasible within a student project and significantly improve credibility relative to industry practice.

Collectively, these recommendations provide a realistic and achievable path for strengthening the design, reducing uncertainty in the analyses, and aligning the project more closely with professional aerospace engineering practice.

6.0 Conclusion

A conceptual design for a single-slotted Fowler flap system tailored to the AADI-2004's agricultural and STOL mission was established. The team defined system requirements, evaluated multiple flap concepts, selected a configuration consistent with comparable spray aircraft, and developed a full aerodynamic, mechanical, and control-system layout.

The final design meets the mission needs by providing the required lift enhancement for low-speed spray runs and short-field operations. The chosen geometry produces a maximum lift coefficient of 3.11, a 23 percent reduction in stall speed, and a projected 40–45 percent reduction in takeoff and landing distance. Preliminary mechanical sizing shows that hinge loads, actuator torque, and packaging constraints fall within realistic limits for general-aviation electromechanical hardware. The CAD model confirms the mechanism fits within the available wing and fairing volume. The FMEA indicates that all identified risks can be mitigated with appropriate inspection, sealing, and material choices.

At the same time, several analyses remain incomplete. Structural load-path validation, detailed hinge-bracket and track-fitting stress assessments, load sharing within the jackscrew system, and environmental protection measures must be finalized before the system can advance beyond the conceptual stage.

Overall, the project demonstrates that the proposed flap system is feasible for AADI-2004 and provides a strong foundation for continued development. The remaining work identified in the analysis will be essential for moving the design toward detailed modeling and eventual prototyping.

References

[1] Team Particle Distributors, Team Particle Distributors Concept Proposal – AADI-2004 Agricultural Aircraft Design, AERO 3002 Final Report, Dept. of Mechanical and Aerospace Eng., Carleton University, Ottawa, 2025.

[2] GlobeAir AG, "What does 'High-Lift Devices' mean? • GlobeAir," GlobeAir, 2025. https://www.globeair.com/g/high-lift-devices#:~:text=Low%2DSpeed%20Performance:%20High%2D,%2C%20landing%2C%20and%20manoeuvring%20operations. (accessed Dec. 08, 2025).

[3] "AERO 4003 Flap System Design, Deliverable 2" Carleton.ca, 2025. https://brightspace.carleton.ca

[4] Gransden, D. "Actuating Systems," Carleton.ca, 2025. https://brightspace.carleton.ca/d2l/le/content/368160/viewContent/4417625/View.

[5] T. Canada, "Airworthiness Chapter 525 Subchapter D - Design and Construction - Canadian Aviation Regulations (CARs)," Transport Canada, Apr. 15, 2024. https://tc.canada.ca/en/corporate-services/acts-regulations/list-regulations/canadian-aviation-regulations-sor-96-433/standards/airworthiness-manual-chapter-525-transport-category-aeroplanes/airworthiness-chapter-525-subchapter-design-construction-canadian-aviation-regulations (accessed Dec. 08, 2025).

[6] "Anatomy of Aircraft & Spacecraft," Jan. 2022, doi: https://doi.org/10.15394/eaglepub.2022.1066.n3.

[7] Hydraaic lecture derek grandsden

[8] S. Gudmundsson, General Aviation Aircraft Design: Applied Methods and Procedures, 2nd ed. Reston, VA, USA: American Institute of Aeronautics and Astronautics, 2022.

[9] $C_{L_{max}} = 1.81$

[10] Gransden, D. "Actuating Systems," Carleton.ca, 2025. https://brightspace.carleton.ca/d2l/le/content/368160/viewContent/4417625/View.

[11] Roskam, J. (1990). Airplane Design Part VI: Preliminary Calculation of Aerodynamic, Thrust and Power Characteristics. DAR corporation

[12] Anderson, J. D. (2011). Fundamentals of Aerodynamics (5th ed.). McGraw-Hill.

[13] T. Canada, "Airworthiness Chapter 525 Subchapter D - Design and Construction - Canadian Aviation Regulations (CARs)," *Transport Canada*, Apr. 15, 2024. https://tc.canada.ca/en/corporate-services/acts-regulations/list-regulations/canadian-aviation-regulations-sor-96-433/standards/airworthiness-manual-chapter-525-transport-category-aeroplanes/airworthiness-chapter-525-subchapter-design-construction-canadian-aviation-regulations (accessed Dec. 09, 2025).

[14] Gransden, D. "Electrical Systems: Part 1," Carleton.ca, 2025. https://brightspace.carleton.ca/d2l/le/content/368160/viewContent/4417635/View. (accessed Nov. 1, 2025).

[15] "AT-402B," Air Tractor, May 31, 2024. https://airtractor.com/aircraft/at-402b/ (accessed Dec. 09, 2025).

[16] S. Bailey, "Air Tractor Pilot Training Course November 2015," vol. 402, p. 602, Available: https://airtractor.com/wp-content/uploads/2016/10/AT-402-502-504-602-Pilot_Training_Course.pdf

[17] "ChatGPT," *ChatGPT*, 2025. https://chatgpt.com - used as a checker. (accessed Dec. 09, 2025).

Appendix

Picture 1: Gantt chart

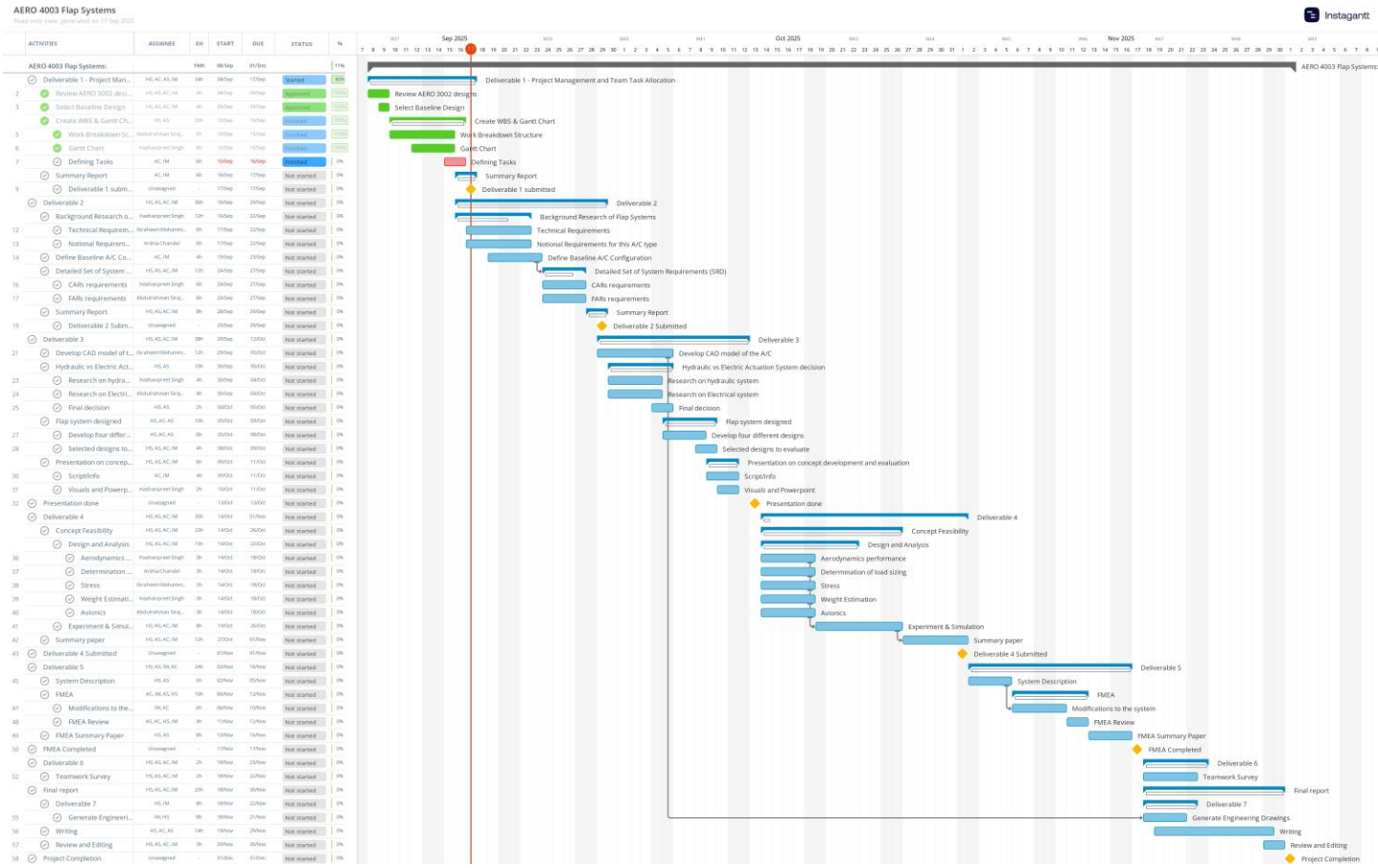

Picture 2: WBS Chart

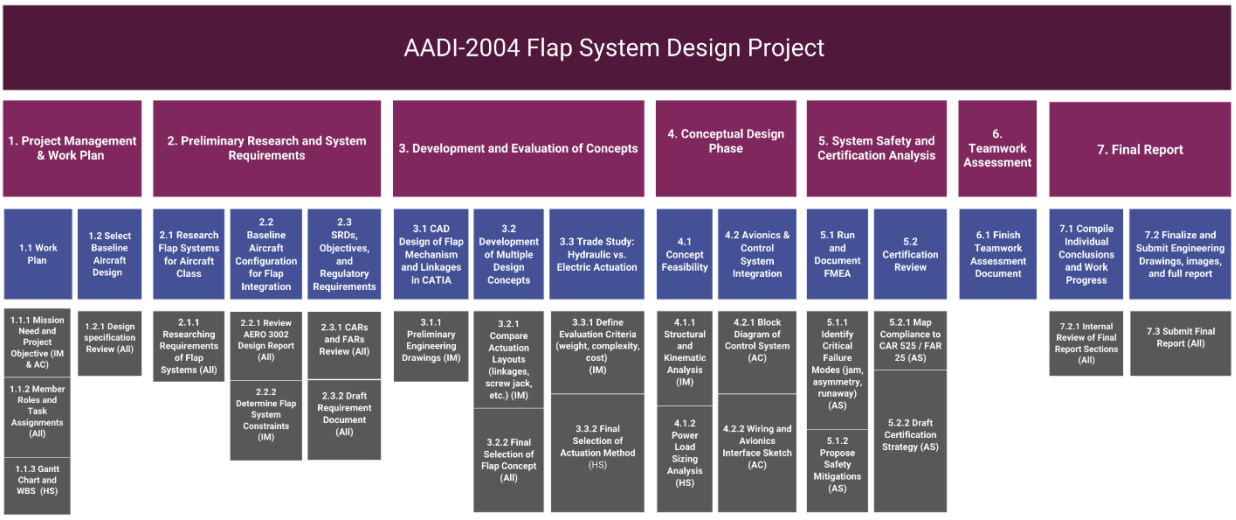

Picture 3: Design Mission Profile

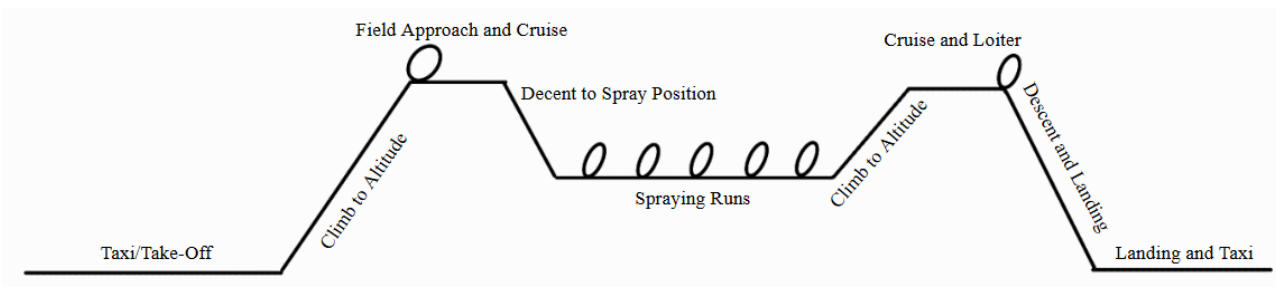

Picture 4: Ferry Mission Profile

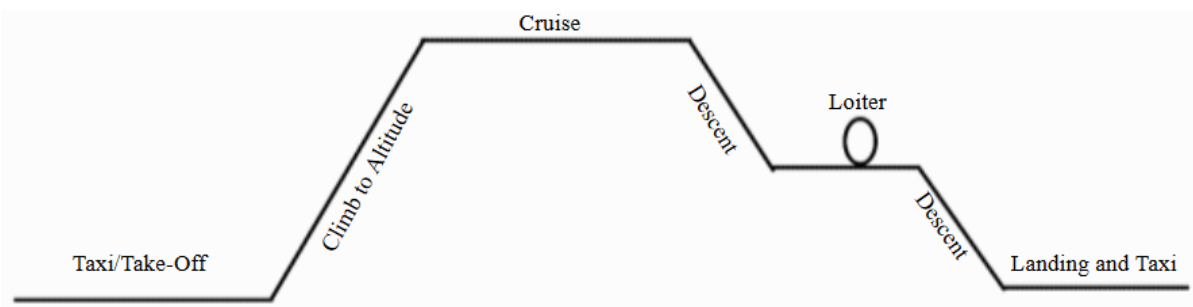

Table 3: Aircraft Specifications

Crew	1
Dimensions	Diameter: 5.1 ft Length: 31 ft
Speed	145 KIAS Cruise; 164 KTAS at 8000 ft
Range	600 nm for Operational Ferry Mission
Payload	Crew: 300 lb Hopper: 5471 lb
Engine	Pratt & Whitney PT6A-67R
Weight	Empty Weight: 6308.353 lb Gross Weight/Maximum Take-off Weight (Payload of 5771 lb): 14,000.634 lb
Takeoff Distance	931 ft ground run 1275 ft field length
Landing Distance	1362 ft over 50 ft obstacle, 7 deg glideslope
Certifications	Title 14 CFR Part 137 IFR

Picture 5: Detailed Requirements Table

Identifier	Description	Rationale	Verification
Physical Parameters			
SLR-P1	The Flaps shall provide a maximum deflection of 40° ± 2° for landing and take-off.	Flap geometry/deflection alters CLmax, thereby shifting stall speed and driving take-off and landing field lengths. This links flap sizing to the constraint analysis and V-n / load cases. Ensures compliance with airworthiness performance requirements for approach and climb. (CARs 523.145, 523.697)[2]	Analysis (Load Analysis)
SLR-P1a	The actuator subsystem shall deliver sufficient hinge movement to overcome aerodynamic loads at 164 KTAS cruise speed with a margin of safety ≥ 1.5.		
SLR-P2	The total mass of the flap system (hinges, actuators, panels) shall not exceed 5% of wing structural weight	Flap system weight and its spanwise distribution shift the CG envelope that's already sensitive to payload (hopper) and ferry fuel usage. This ensures compliance with stability and control requirements by accounting for local weight moments (CARs 523.23, 523.25)[2]	CG Analysis and Stability Evaluation
SLR-P2a	Weight distribution shall be included in aircraft CG analysis to demonstrate and maintain stability		
SLR-P3	The flap system shall be designed to withstand limit loads calculated from gust and maneuver load factors up to +3.8g and -1.52g in accordance with FAR 23 structural requirements [3].	Required ultimate load factors for Normal Category airplanes; ensures flap surfaces survive gust/maneuver design conditions. This ensures loads resolve into main spar and trailing-edge structure that already carry gust/maneuver loads; prevents hinge/track overstress.	FEM Analysis
SLR-P3a	The flap hinge line structure shall transfer loads into the primary wing spar without exceeding allowable stresses		

Req ID	Description	Rationale	Verification
	Configurations		
SLR-C1 SLR-C1a	The flap system shall be a single-slotted flap spanning a minimum of 55 percent of wing semi-span Flap side seals must prevent flow leakage at high deflections	With Single slotted flaps and vortex generators in the baseline design, the chosen flap span (55%) interlocks with stall-strip placement for root-first stall and with retained aileron span.	CAD Demonstration (Flow visualization, if time permits)
SLR-C2 SLR-C2a	The flap retraction system shall be fully enclosed within the wing trailing edge, maintaining wing aerodynamics. Flap fairings shall align with the targeted aerodynamic drag coefficient (CD) derived from baseline constraint analysis (≤ TBD increase relative to clean wing).	Fairings around the flap tracks/actuators change the drag polar which further influences the range (600 nm) and SFC (0.6 pound per hour)/horsepower.)	CAD inspection + (aerodynamic analysis)
SLR-C3 SLR-C3a	The flap panels shall be designed for easy maintenance and inspection via access panels. Panels shall be removable without disturbing hopper plumbing or spraying system ducts.	Access panel layout should not interfere with spray system plumbing.	CAD inspection
	Hardware Components		
SLR-H1 SLR-H1a	The flap system shall employ hydraulic or electro-mechanical actuators capable of full deployment in about 8 ± 1 s seconds. Actuators shall provide redundancy or lockout to prevent free-floating in case of hydraulic/electrical failure.	Actuator selection affects aircraft-wide systems, including landing gear and avionics. Deployment timing ensures safe approach/landing phases for agricultural applications. Redundancy or lockout is required to prevent uncommanded surface motion or jam risk in case of system failure (FAR 23.145 (controllability)) [3].	Failure mode demonstration (lockout/redundancy)
SLR-H2 SLR-H2a	The flap track and hinge mechanisms shall be designed for 25,000 cycles minimum before requiring major overhaul. The fatigue life-cycle shall be validated as per AWM 523.2240/523.2235	Agricultural aircraft perform frequent short sorties; flap tracks/hinges must meet high fatigue endurance to ensure structural integrity. Compliance with AWM fatigue requirements ensures acceptable service life. Fail-safe locks and fatigue validation reduce asymmetry risks from hinge failure [4].	Analysis
SLR-H3 SLR-H3a	Each flap panel shall have dual-redundant position sensors with cross check and built-in test The position sensing function shall report absolute flap angle and any sensor disagreement within 0.5 seconds	Two sensors prevent undetected asymmetry and allow auto-protection by stopping flap movement. Fast detection (<0.5 s) ensures pilots receive immediate warning and prevents hazardous roll/yaw during deployment.	Demonstration (Ground test, in a real world scenario)
	Airworthiness & Safety		
SLR-S1 SLR-S1a	The flap system shall comply with 14 CFR part 23.701[2], ensuring flap asymmetry protection such that differential deployment does not exceed 5 deg. The system shall incorporate position and feedback sensors.	Keeping left–right flaps within 5° ties together the sensors, control computer, motors/brakes, power supply, and cockpit alerts—if any one of these lags or fails, one flap can drift, so, they all work together to keep the airplane level.	System design inspection and demonstration
SLR-S2 SLR-S2a	The flap system shall fail in a neutral locked position in case of total actuator or control system failure. The system shall incorporate mechanical locks to prevent aerodynamic blowback under max dive speed.	A single point-failure propagates to yaw/roll; mitigation needs sensors, interlocks and a procedural response	Analysis and Inspection
SLR-S3 SLR-S3a	Flap operation shall not compromise aircraft's ability to maintain climb gradient of 8.3% as per FAR 23.210[3]. Both flaps shall be at the take-off setting during a go around and not extend beyond it.	This ties engine power, airspeed signals, flap sensors, the controller, motors/brakes, and cockpit alerts together so that on go-around they quickly set both flaps to the takeoff position and keep them there on stable power, letting the airplane hold the 8.3% climb [3].	Analysis and Inspection
	Controls		
SLR-CT1 SLR-CT1a	The flap system shall be operable through a dedicated cockpit control lever integrated with the Garmin G3X avionics suite. The cockpit control lever shall include mechanical detents at 0°, 15°, 25°, and 40°.	Provides an intuitive and standardized pilot control interface. Mechanical detents prevent overshoot, reduce pilot workload, and provide tactile confirmation. Integration with the avionics suite improves situational awareness and ties into system monitoring [5].	human factors analysis (detent spacing, ergonomics).
SLR-CT2 SLR-CT2a	The system shall provide flap position indication on the cockpit display with accuracy of ±1°. Flap position sensors shall measure angular deflection with resolution of ≤0.5°.	Accurate position feedback is critical to avoid mis-trim, prevent asymmetry, and meet regulatory requirements (CARS 523.699-Flap position indication) [2]. ±1° display accuracy ensures pilots can fly published procedures reliably; 0.5° sensor resolution supports redundancy and fault detection.	Inspection of G3X display logic.
SLR-CT3 SLR-CT3a	The flap control logic shall include an interlock to prevent flap deployment above V_FE <TBD kts>. The avionics shall use airspeed sensor input to inhibit flap actuation above V_FE <TBD kts>.	Prevents structural overload and loss of control at high dynamic pressure. Using airspeed input ensures protection even in abnormal scenarios (pilot error, distraction). This function directly addresses safe operation limits.	Analysis (logic truth table for V_FE lockout)
	Stream Specific Requirements		
	Power & Actuator Systems		
SLR-PA1 SLR-PA1a	The actuator system shall record cycle count, peak torque/current, max. Temp. and the last <tbd> fault events Exceedance of any threshold shall setup a a maintenance counter and declare a service required status on the avionics bus	Increases durability and helps in maintenance scheduling by tying sensors to operations.	Analysis of data-logging functions
SLR-PA2 SLR-PA2a	The flap control path shall be electrically with no continuous mechanical linkage between cockpit control and flap surfaces The flaps shall begin moving within <tbd> ms after the pilot moves the control, with delay variation (jitter) ≤ <tbd> ms and a control update rate ≥ <tbd> Hz.	Meeting this timing means the plane's network, sensors, and flap motors all keep up together; it keeps both flaps moving in step, lets safety features act at high speed or during a go-around, and depends on steady power and clear cockpit cues	Timing Analysis
	Control & Avionics Integration		
SLR-CA1 SLR-CA1a	The avionics system shall alert the pilot of flap system faults. The controls & avionics shall trigger a "FLAP ERROR" warning when sensor errors, loss of input, or jam detection occurs.	A position warning is required to ensure the pilot is aware of flap failures that could affect the aircraft performance. This prevents undetected faults. CFR-2014-Federal Aviation Administration - 23.699 Wing flap position indicator [2].	Simulation of failure modes + inspection of annunciation logic
SLR-CA2 SLR-CA2a SLR-CA2b	The avionics shall prevent asymmetric flap commands that can lead to hazardous flight characteristics. The flap control shall automatically compare left and right position sensor feedback. The avionics shall use flap position sensors to verify position in real time.	Asymmetric flap deployment can cause rolling/yawing moments resulting in loss of aircraft control. Verifying and sensor feedback can detect failure in flaps early to stop motion. CFR-2014-Federal Aviation Administration - 23.701 Flap interconnection [2].	Software logic review + FMEA
SLR-CA3 SLR-CA3a	The avionics shall ensure flaps move when the pilot makes a control input. The flap control shall require specific command inputs and shall reject noise/unrecognized signals.	Uncommanded flap movement can cause aerodynamic changes and unsafe flight conditions. Filtering allows for unneeded signals to be disregarded by the system. CFR-2014-Federal Aviation Administration - 23.697 Wing flap controls [2].	Logic truth table + EMI/noise tolerance analysis
SLR-CA4 SLR-CA4a	The flap control shall prevent flap over-travel beyond the fully retracted position to avoid structural overstress. The avionics shall appropriate a limit switch to stop flap operation at full position and stop further retraction commands if over-travelling is being achieved.	Operating the flap motor beyond the mechanical limit can overstress the flap torque tubes and linkages causing failure [6].	Inspection of CAD/control design
	System Safety & Certification Analysis		
SLR-SCA1 SLR-SCA1a	The flap system shall limit asymmetry to ≤2.0° and stop runaway motion within ≤1.0 s or ≤2.0° unintended travel. The aircraft shall remain controllable for a flaps-inoperative landing on a 2,000 ft strip. Dual independent position sensors per side with asymmetry cutout (≥200 ms persistence), latched fault, and hard power removal on runaway.	Low-altitude ag runs (100–500 ft AGL) give little margin. 2° cap preserves roll authority, 1 s limit prevents divergence. Flaps-inop landing ensures safe recovery on rural strips.	FMEA of failure modes + control logic simulation (runaway/asymmetry scenarios)
SLR-SCA2 SLR-SCA2a	The flap system shall comply with CAR 525 / FAR 25 safety provisions and undergo structured safety analyses (FMEA/FHA/SSA). Develop a compliance matrix mapping functions to FAR 25 clauses (§25.701, §25.703, §25.1309, §25.1529). Conduct FMEA covering actuator jams, sensor loss, flap skew, and classify hazards per ARP4761.	Certification requires showing no single failure leads to unsafe flight. FMEA/FHA ensures hazards are identified and mitigated. Compliance matrix documents certification readiness.	Safety assessment report (compliance matrix, FMEA/FHA)
SLR-SCA3 SLR-SCA3a	The flap system shall include an emergency extension mode allowing ≥25° deployment within 15 s using ≤150 N pilot input, and achieve ≥20,000 cycles with dispatch reliability ≥99.5%. Provide alternate extension (manual, hydraulic, or gravity assist). Size drivetrain for jam load at 40°/max $\bar{q}$; require condition-based inspections every 200 hr; alerts for overspeed inhibit/faults within 1 s.	Ag sorties demand frequent flap use; failures mid-season reduce productivity. Emergency extension guarantees safe landing from short strips. High cycle life and clear alerts sustain mission tempo.	Analysis of emergency loads + maintenance reliability analysis
SLR-SCA4 SLR-SCA4a	The flap system shall withstand ag operational environment (−40 °C to +55 °C, fertilizer/pesticide exposure, dust, washdowns) and remain clear of spray equipment. It shall allow actuator replacement in ≤30 min with standard tools. Seal actuators and LRUs with chemical-resistant housings and IP67 connectors. Qualify per DO-160 for fluids, waterproofness, sand/dust, EMI. Maintain ≥150 mm clearance from spray plumbing; provide quick-access panels and modular actuators with plug-in connectors.	Spray aircraft face chemical plumes, dust, and field maintenance with minimal infrastructure. Robust sealing prevents corrosion. Clearance avoids spray disruption. Fast swaps keep aircraft available during short spraying seasons.	Inspection of design compliance (IP67, clearance) + analysis of maintenance task time
	Actuation and Mechanical designs		
SLR-AMD SLR-AMD1a	The flap system shall employ a mechanical interconnection to ensure that there is symmetric extension-retraction of left and right wing flaps. Actuators and linkages shall be arranged so that both flaps move together during extension and retraction.	Prevents asymmetric flap deployment, reducing the risk of uncommanded rolling moments as required by CAR 525.701(a) [2].	Inspection of linkage layout + FMEA of interconnection failures
SLR-AMD2 SLR-AMD2a	The flap system shall stop both flaps at the same angle to ensure symmetrical deployment if one flap becomes jammed. Mechanical interconnection or gearbox shall limit differential flap angle to no more than 3° under jam conditions.	Meets CAR 525.701(b) [2] by ensuring the aircraft remains controllable in case of a single-side jam.	Jam load analysis + simulation of differential angles
SLR-AMD3 SLR-AMD3a	The actuator shall provide sufficient torque to move flaps under more than the expected maximum aerodynamic loads by applying a Factor of Safety (SF) of 1.5. Actuator performance shall be verified by calculating hinge moments at Maximum Flap Extended Speed and showing that actuator torque capacity is 1.5 times larger than the calculated expected load.	Ensures reliable extension/retraction under worst-case aerodynamic loads, consistent with CAR 525.671 [2].	Hinge-moment analysis + torque capacity check
SLR-AMD4 SLR-AMD4a	The flap actuation system and all mechanical components shall withstand the maximum aerodynamic loads at the Maximum Flap Extended Speed with a Factor of Safety (SF) of 1.5. Structural sizing shall be based on hinge moment calculations at the Maximum Flap Extended Speed and verified with stress analysis of the mechanical elements.	CAR 525.303 [2] states that unless otherwise specified, a minimum Factor of Safety of 1.5 must be used in structural design. This ensures that there is an acceptable margin against unexpected loads and material variations.	Stress analysis (FEM or hand calc)
SLR-AMD5 SLR-AMD5a	The actuator and torque shaft shall be able to withstand loads from a jammed flap during extension and or retraction without structural failure. Flap system mechanical components shall be designed to withstand stresses corresponding to actuation against a jam with a Factor of Safety (SF) of 1.5.	Complies with CAR 525.701(d) [2], which requires flap interconnections to be able to carry jam loads safely.	Jam load stress analysis + FMEA
SLR-AMD6 SLR-AMD6a	The flap system shall use an electric motor driving a jackscrew connected to a torque tube for reliable and synchronized flap movement. Limit switches shall stop the motor at the fully retracted and fully extended positions to prevent overstressing the torque shaft.	Matches the current Agricultural aircraft practice from the Air Tractor Pilot Training Course [6] as it prevents motor overrun and reduces structural loads on the torque tube.	Inspection of drive layout + simulation of limit switch logic
SLR-AMD7 SLR-AMD7a	The flap system structure shall be designed to withstand asymmetric aerodynamic loads. Designed with one side carrying the maximum aerodynamic loads and the other side carrying no more than 80% of that load. Structural analysis shall confirm that all flap system mechanical components can sustain these asymmetric conditions with a standard Factor of Safety (SF) of 1.5.	Meets CAR 525.701(c) [2] which requires flap systems not subjected to slipstream to be designed for uneven loading cases (100% vs 80%). For single-engine aircraft with flaps located in the propeller slipstream, this case may not govern, but it is included for completeness to demonstrate awareness of all CAR 525.701[2] load cases..	Structural FEM/hand calc + load case analysis

Picture 6: Final CAD Design with Fairings

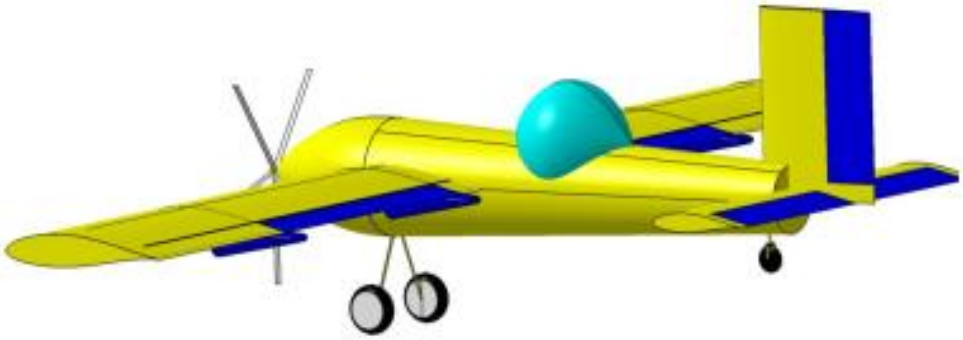

Figure 3: AADI-2004 Clean Configuration with Fairings