Carleton University
Department of Mechanical and Aerospace Engineering

FALL 2024

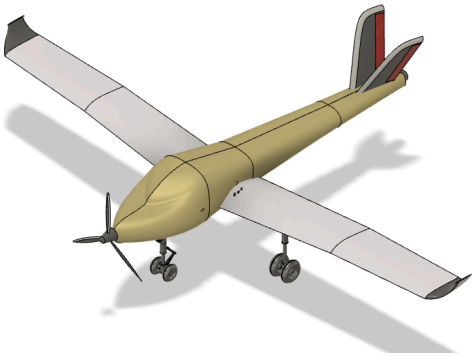

SYA Aircraft Corp

AERO 4003 L1 - Aerospace Systems Design

Dr. Derek Gransden

Group #7
Arnie Nambiar (101183154)
Atharva Bendre (101198413)
Hashanpreet Singh Dhaliwal (101187722)
Zaid Al-Lahham (101196564)

Due Date: December 6th 2024

Introduction

The landing gear system is one of the most critical components of an aircraft as it is responsible for supporting substantial loads during takeoff, landing, and taxiing operations. Its importance extends beyond the structural integrity of the aircraft to include aerodynamic performance, stability, and passenger safety as well. The landing gear system is designed to withstand a range of forces including static and dynamic loads, bending stresses, and vibrations. The landing gear must also comply with stringent safety and regulatory standards.

This project focused on developing a retractable hybrid landing gear system for a Light Sport Aircraft (LSA). By replacing the fixed landing gear, the new system aimed to enhance aerodynamic performance, reduce drag, and improve overall efficiency. The tricycle configuration, widely used in light aircraft, ensures stability and ease of maintenance. The design incorporates oleo struts for shock absorption, hydraulic disc brakes for deceleration, and electric and hydraulic actuation mechanisms for reliable gear deployment and retraction.

The overarching goal was to improve the performance characteristics of the aircraft whilst adhering to the Canadian Aviation Regulations (CARs) and maintaining the highest safety standards. By combining modern materials and advanced design principles, the proposed system addresses the unique challenges of the LSA category, offering a significant improvement over traditional fixed-gear designs. The proposed retraction system will allow the main landing gear to fold into the belly of the aircraft without bay doors, minimizing aerodynamic drag, similar to the design employed in the DC-3 and Seversky P3. The nose landing gear keeps bay doors.

Objective

The primary objective of this project was to design and develop an actuated landing gear system for a Light Sport Aircraft that enhances its performance whilst adhering to the customer and CAR requirements, based on design, safety, and performance. This project aligned with the mission needs statement to improve the performance and efficiency of a pre-designed Light Sport Aircraft whilst maintaining safety as the top priority.

Background Research

Retractable landing gear systems are a staple of modern aviation, offering substantial improvements in flight performance and aerodynamics. In the context of Light Sport Aircraft (LSA), which prioritize performance, safety, and operational simplicity, incorporating a retractable landing gear system marks a significant advancement over traditional fixed-gear configurations. LSAs are inherently constrained by strict weight and simplicity requirements to maintain their classification. Introducing a retractable system inevitably adds weight and complexity through components such as motors, actuators, uplocks, and downlocks. However, advancements in materials like high-strength aluminum alloys and composites have enabled the development of lighter and more robust landing gear components, offsetting these challenges.

Hydraulic and electrical actuation systems further enhance reliability, enabling smooth retraction and deployment of the gear while maintaining safety and performance. The design drew inspiration from aircraft with proven configurations, such as the Douglas DC-3, Boeing 737, and Seversky P3, which utilize streamlined retractable systems to reduce drag and improve aerodynamic efficiency.

The proposed retractable system replaces the fixed gear with a tricycle configuration, adding approximately 25–45 lbs to the aircraft and causing a slight rearward shift in the center of gravity (CG). This shift was carefully addressed to maintain stability and safety. Key features of the design include hydraulic and electric actuation for reliable deployment, manual override mechanisms for emergencies, hydraulic disc brakes for effective deceleration, and oleo struts for efficient shock absorption. Streamlined landing gear doors further reduce drag, echoing the aerodynamic strategies employed in the DC-3, 737, and P3.

To align with the aircraft's mission profile, which involves takeoff, cruising, and sightseeing, adjustments were made to balance the added weight with optimal performance. Safety measures such as redundant uplocks and downlocks, warning systems, brake cooling ducts, and shimmy dampers were integrated to meet both regulatory and operational requirements. This design strikes a careful balance between increased system complexity and improved aerodynamic performance, ensuring compliance with industry standards and reliable operation.

Work Plan and Breakdown Structure

Figure 1 below represents the work breakdown structure of every deliverable.

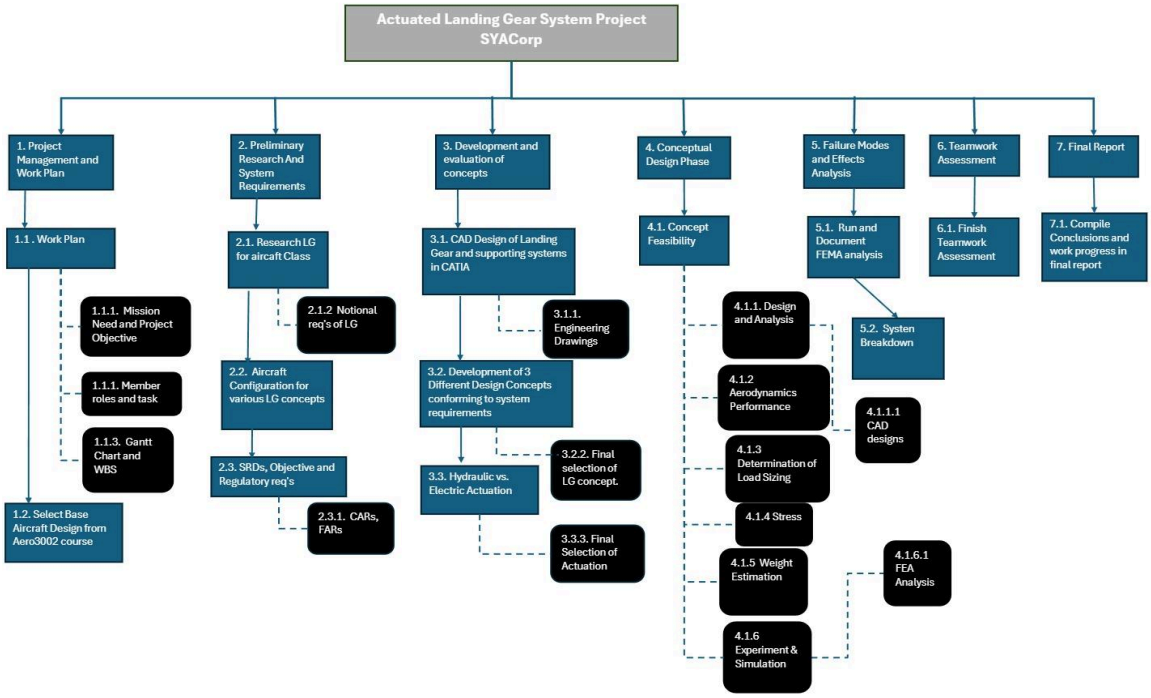

Figure 1.0: Work Breakdown Structure

Figure 2.0 below represents a gantt chart where it breaks down each deliverable in detail.

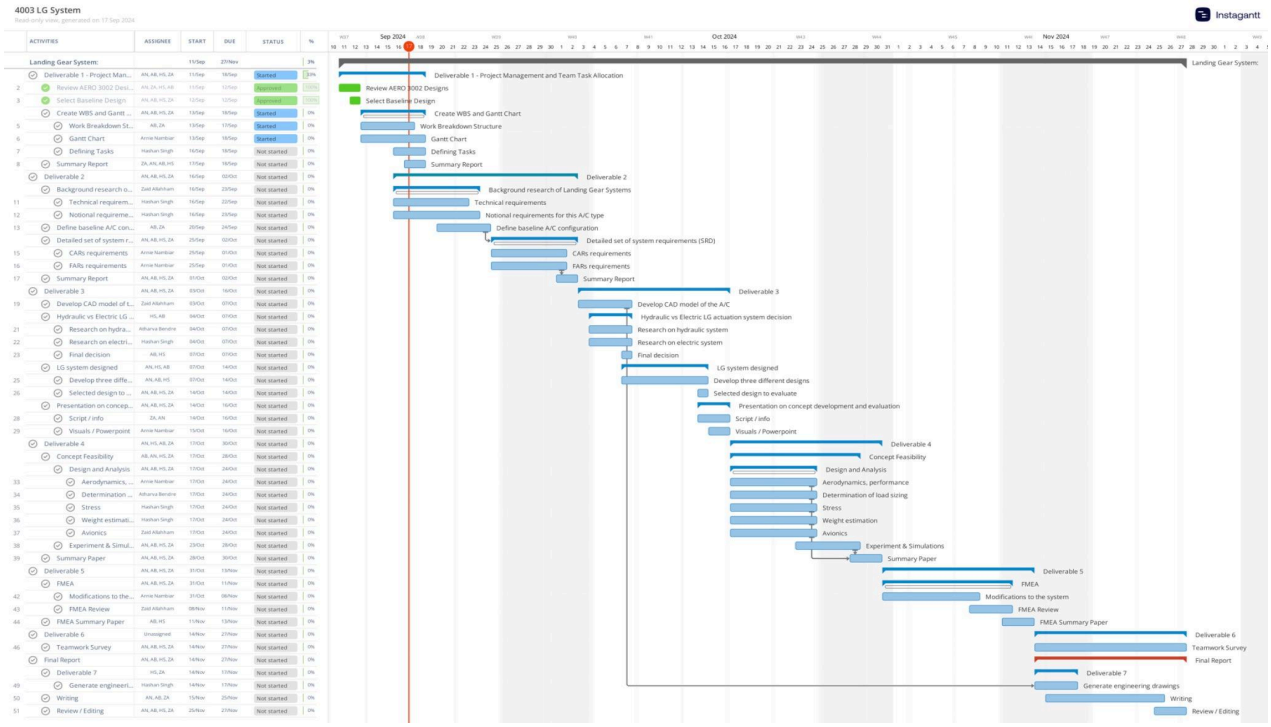

Figure 2.0: Gantt Chart

The Work Breakdown Structure (WBS) in Figure 1.0 above provided a framework that guided the design process for this project. The project was divided into seven major phases: project management and planning, preliminary research and requirements, concept development, feasibility analysis, failure mode and effects analysis (FMEA), teamwork assessment, and the final report. Each phase contained clearly defined tasks and deliverables, ensuring structured progress and comprehensive coverage of the project's objectives.

The Gantt Chart in Figure 2.0 highlighted the timeline and interdependencies among these tasks while also assigning a group member to each task. The initial phase involved defining the project mission, assigning member roles, and creating a Gantt chart and work plan. This was followed by extensive research into landing gear requirements, industry regulations (CARs and FARs), and system objectives. The subsequent phases focused on conceptualizing various designs, including the development of three potential configurations, and performing detailed evaluations to select the most suitable concept.

Key milestones, such as CAD modeling in CATIA, the selection between hydraulic and electric actuation systems, and simulation-based feasibility testing, were sequentially aligned to optimize workflow. Deliverables also included detailed technical analyses and load sizing. To ensure design reliability, a thorough FMEA process was conducted to assess potential failure modes and their effects. Weekly task assignments and regular progress reviews helped manage time effectively, as reflected in the chart's structured layout. With a strong emphasis on collaboration and adaptability, the plan also incorporated a teamwork assessment and feedback process, culminating in the final engineering drawings and report submission.

System Requirements

Referring to the certification requirements set by the Canadian Aviation Regulations (CARs) and our own set design goals based on customer and market requirements, a Detailed Set of System Requirements (SRD) was constructed. Attention was duly paid to ensure that the Landing Gear system to be designed would conform to the standards set in CARs, while simultaneously trying to meet manufacturer and market expectations. The SRD goes into detail about what are the key advantages gained by the aircraft, the corresponding disadvantages made apparent and the new interfaces to be incorporated into the new retractable landing gear model into the aircraft.

Table 1 below lists the various components of the complex landing gear system. Each component is accompanied by its source, explaining why it was selected, along with a rationale detailing the significance of addressing specific concerns related to that component.

Table 1: Components of the Complex Landing Gear System with Selection Rationale

Identifier	Description	Source	Rationale
SYA_01	All landing gear components, including strust shall be made of anticorroding, hi-strength aluminum alloy	CAR 525.607, CAR 525.729	Done in accordance to CAR requirements. Material selection done so to provide strength and durability
SYA_02	The landing gear supporting structures shall be able to withstand aerodynamic loads at 0.67 VC with the gear extended	CAR 525.729(a)(2)	The landing gear must bear hard landings with sink rate greater than specifications
SYA_03	The landing gear stowage area must protect equipment within the wheel wells from damage	CAR 525.729(f)	Ensures that critical systems and equipment housed within the wheel wells are protected from potential hazards caused by tire or brake failure, preventing operational hazards.
SYA_04	The wheels shall be sized to ensure unrestricted retraction and extension of the landing gear while minimizing aerodynamic drag during flight.	CAR 525.729(a)(1)	The placment of tyre into its housing does not affect the aircraft's performance, ensuring fuel economy is also not touched
SYA_05	The landing gear shall be designed to prevent lateral and longitudinal tipovers under all conditions where the aircraft's center of gravity (C.G.) lies within the specified limits.	Design Requirement	The placement must relate to the center of gravity to ensure proper balance in the aircraft's tricycle stance and to prevent tipping
SYA_06	The landing gear stowage shall support the full range of actuation and provide sufficient clearance under maximum operational loads.	CAR 525.733(d)	Done in accordance to CAR requirements. Proper stowaage of LG essential for its protection and aircraft's optimal performance
SYA_07	The landing gear system shall include uplocks and downlocks to secure the gear in both the extended and retracted positions	CAR 525.729(b), Design Requirment	Uplocks and downlocks are essential to keep landing gear in place during flight or on ground
SYA_08	The wheel shall be capable of withstanding a static load of the maximum takeoff weight of the aircraft with a margin of safety, whilst also accounting for loading conditions based on the critical center of gravity	CAR 525.731(b) (c)	The reason for a margin of safety in the allowable static load is to ensure that the wheel is capable of withstanding unexpected loads.
SYA_09	The wheel assembly shall feature a tread pattern designed to provide sufficient traction on a variety of runway surfaces, including wet and icy conditions.	Design Requirement	Ensures the aircraft can maintain control and stability during takeoff, landing, and taxiing on different surface conditions, reducing the risk of skidding.
SYA_10	The Landing gear system shall withstand vertical velocity of 12 ft/s at the aircraft design landing weight without failure	CAR 525.723(b), design requirement	Adequate shock absorption reduces the impact on airframe preventing aircraft damage.
SYA_11	The LG shall withstand lateral loads up to 20 percent of the vertical or 20 percent of the drag load, whichever is greater.	Design Requirement	Lateral loads occur during landings in crosswind directions.
SYA_12	The main and nose landing gear shall be equipped with vibration-dampening oleo struts	Design Requirement	Oleo struts use a combination of gas and oil to absorb shocks and vibrations, ensuring smoother landings
SYA_13	A back-up manual pump actuation shall be incorporated to deploy landing gear	CAR 525.729 (c)	This system is a redundancy in case of failure of primary actuation system
SYA_14	A Landing Gear Position indicating guage shall be a part of the cockpit Instrument panel	CAR 525.729 (e)	To assist the pilot in determining position and affirmation of deployment of Landing gear.
SYA_15	A backup fail-safe landing gear position indicator shall support the main indicator, along with warning sounds	CAR 525.729 (e)(6)	In case of failure of primary LG indicator, the backup option will assist the pilots in determining landing gear position
SYA_16	LG malfunction indicator will accompany the main and backup landing gear indicators, along with caution sounds	CAR 525.729 (e)(7)	The Malfunction Indicator will alert the pilot if failure occurs in deployment of landing gear itself.
SYA_17	Callouts shall be utilsed to alert pilots of undeployed Landing Gear near ground level	CAR 525.729 (e)(2)	In case an undeployed landing gear is detected in failure or missed deployment, the Callouts will alert the pilot.
SYA_18	The deploying actuation will be controlled with a lever in cockpit, at a sufficient distance from both pilots.	CAR 575.777 (f)	CAR requirement - Ideally located at center-base console, ahead of throttle controls for access to both pilots.
SYA_19	Landing gear deployment will occur when the lever is pulled towards the pilots.	CAR 525.779	Done in accordance to regulations dictated in Canadian Aviation Regulations
SYA_20	The extrusion shall enclose controlled ducts to allow brake cooling.	CAR 525.735 (j)	If in case the brakes heat up extensively due to rejected landing, they will be air-cooled by controlled ducts.
SYA_21	Nose landing gear shall be released in a propulsive manner, away from the aircraft	CAR 525.721 (a)	CAR requirements for failure of landing gear mechanism
SYA_22	If the main landing gear loosens and fails, the release must occur in a manner that will reduce damage on aircraft	CAR 525.721 (a)	The landing gear tearaway will occur in a manner that reduces damage on control surfaces and fuel tanks
SYA_23	Hydraulic shimmy dampener shall be incorporated on the landing gear	Design Requirement	Incorporated to not allow landing gears to shimmy around.
SYA_24	The aerodynamic extrusions enclosing the landing gear shall be used as skids	FAA 14 CFR Part 23.2235	Belly Landing mean no landing gear deployment at all. The extrusions surrounding the landing gear cushion the impact
SYA_25	The braking system shall prevent brake fluid loss from leading to a hazardous fire in any conditon	CAR 525.735(b)(2)	The braking system must be robust enough to handle emergency scenarios, such as a rejected takeoff, without compromising safety.
SYA_26	The Parking Brake shall remain engaged without additional input until manually released, even in line failure	CAR 525.735(h)	This ensures that the brakes remain engaged during system failure for the safety and reliability of ground operations.
SYA_27	Brake control shall be incorporated into rudder pedals, called toe brakes	CAR 525.735 (c)	This has been done to reduce the complexity of avionics and hydraulics in aircraft.
SYA_28	An electrical backup switch shall be used in case of failure of toe brake control.	CAR 525.735 (c)	If in case the primary braking method fails, pilots can deploy the brakes through an electrical switch to slow the aircraft down.
SYA_29	The decceleration and turning of aircraft on ground shall be assisted by disc brakes on both main landing gears.	CAR 525.735 (f)	To allow for braking and turning of aircraft on ground. Disc brakes chosen as they have traditionally been used in general aviation
SYA_30	Manual fire exitingushers shall be provided in cockpit to suppress brake fire.	CAR 525.735 (f)	Brake fires are fairly common occurrence. A tradtional fire exitinguisher will be utilised to dissipate fire, if ever caused.
SYA_31	The Main Landing gear shall be designed to dissipate excess heat from overheating.	CAR 525.735 (j)	The brakes will be designed and placed in a manner that allows easy heat dissipation into airflow not affecting aircraft wetted area.
SYA_32	A regular ratchet mechanism connected by a cable to a linkage and a master cylinder will be used for the parking brake. Be placed on	CAR 525.735 (d)	This is a well-tested method for parking brakes, commonly used in most airplanes and cars.
SYA_33	A brake wear pin will be placed on the brake piston housing to indicate when the brakes need to be replaced.	CAR 525.735 (i)	Cost reduction, safety, and reliability are key reasons to have a brake wear indicator.
SYA 34	The wing spar shall account for increased landing gear loading	Design Requirement	Since the landing gear is currently integrated into the wing spar, the spar is subjected to higher loading. The existing wing spar is insufficient to support the additional weight, necessitating reinforcement to ensure structural integrity.
SYA_35	The cruise range of the aircraft shall remain unchanged despite the increased fuel capacity, ensuring compensation for the added weight of the landing gear.	Design Requirement	The incorporation of heavy hydraulic and electrical systems, along with additional minor weight from associated control systems for landing gear actuation, increases the minimum operating weight of the aircraft. Consequently, the corresponding range of the aircraft will decrease.
SYA _36	The landing distance of the aircraft shall not exceed 405.4 meters, accounting for the increased stall speed resulting from the added weight of the new actuated landing gear.	Design Requirement	The increased maximum landing weight of the aircraft, combined with the higher drag generated by the complex landing gear systems, results in a slightly higher stall speed. This, in turn, leads to an increased landing speed and consequently a greater landing distance.

Concept Development & Selection:

The design of the actuated landing gear system for the Light Sport Aircraft (LSA) focused on developing a configuration that balances performance, weight efficiency, and system complexity. Three primary design concepts were evaluated, incorporating different configurations and actuation mechanisms to meet the project objectives while addressing client and regulatory requirements.

The **first concept** was a **conventional all-hydraulic semi-retractable** landing gear system. While simple and reliable, this design featured **higher drag** due to its exposed components, reducing aerodynamic efficiency during cruise. The **trade-offs in stability and load capacity** were notable, as the added weight and drag impacted payload capacity and overall range. This configuration, while robust, was not optimal for an LSA prioritizing performance and fuel efficiency.

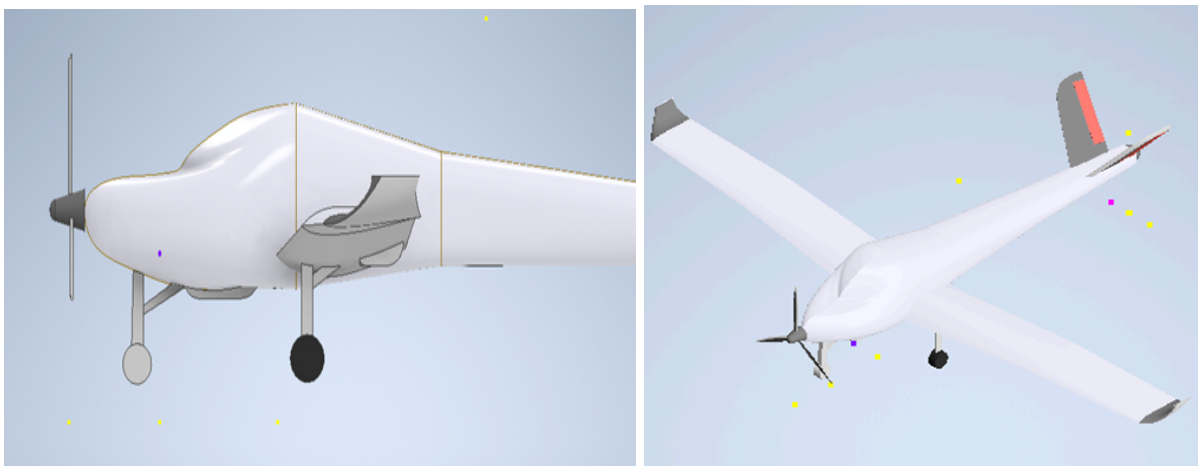

Figure 3: Concept 1- Conventional tri-cycle retractable landing gear configuration.

The **second concept** utilized a fully electric actuation system. Both the nose landing gear (NLG) and main landing gear (MLG) were **powered by electric motors** with electro-mechanical actuators (EMAs) and backed by an auxiliary power system for emergencies. This approach was innovative and lightweight, offering a streamlined system architecture with fewer components compared to hydraulic systems. However, electric actuation has **limited operational history** in general aviation, raising **concerns about reliability**. Additionally, the upfront development costs were higher, potentially affecting the project's feasibility.

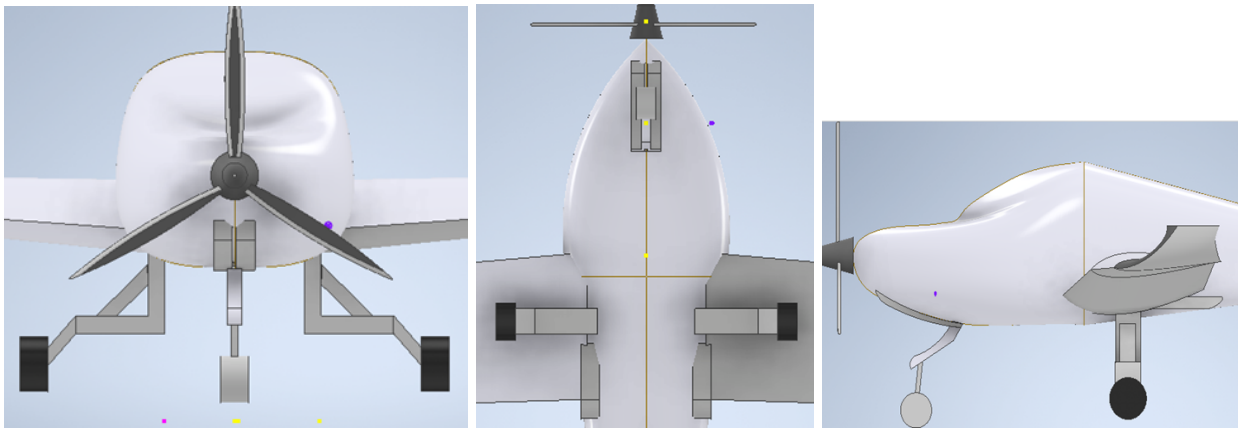

Figure 4: Concept 2- Fully electric actuation system configuration.

The **third concept**, and the selected configuration, was a **hybrid system combining electric and hydraulic actuation mechanisms**. The **NLG utilized electric actuation** powered by the aircraft's engine, offering simplicity and reduced weight. This system was protected by bay doors, ensuring aerodynamic efficiency. Conversely, the **MLG employed hydraulic actuation**, allowing for reliable partial retraction into exposed housings, reducing system complexity and maintenance requirements. A **hand-crank emergency deployment** mechanism provided a fail-safe solution for both the NLG and MLG. This hybrid system achieved an **optimal balance** between innovation and practicality, combining the strengths of electric actuation while maintaining the reliability of hydraulic systems.

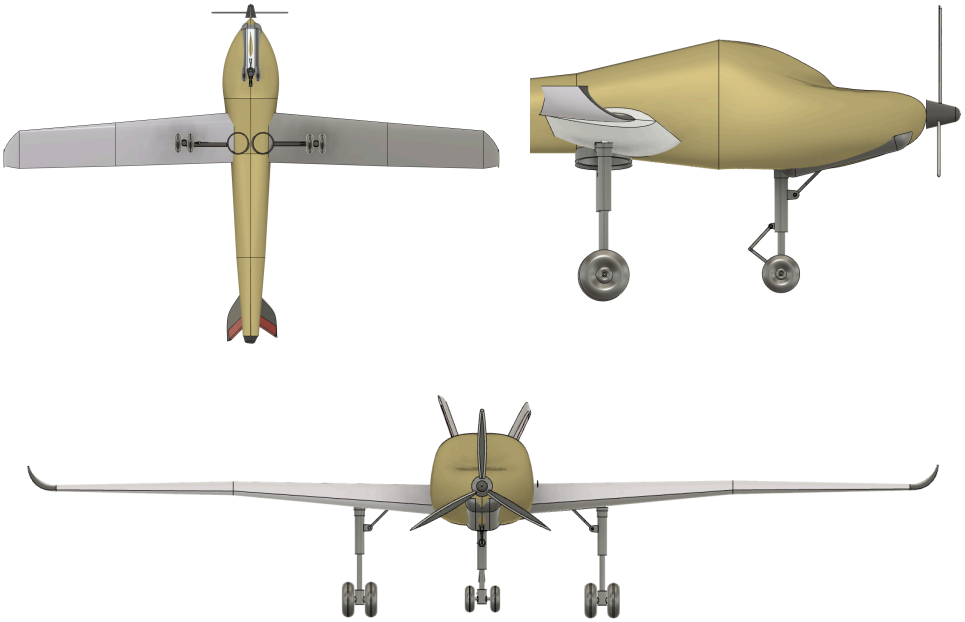

Figure 5: Concept 3 - hybrid tricycle actuated system configuration

The selection of the hybrid system was driven by its alignment with the mission and performance goals of the LSA. By combining the lightweight and features of electric actuation with the strength of hydraulic systems, the design minimized drag and weight while enhancing maintenance accessibility and overall reliability. The hybrid configuration represents a cost-effective solution that meets regulatory requirements without compromising the aircraft's performance or safety. This approach lays the foundation for a detailed design phase, where the hybrid system's components will be further optimized to maximize the aircraft's operational efficiency.

System Overview

The actuated landing gear system designed for the Light Sport Aircraft (LSA) is a hybrid tricycle configuration comprising nose landing gear (NLG) and main landing gear (MLG). The system is essential to ensuring stability and operational safety during taxiing, take-off, and landing. It employs a combination of electric and hydraulic actuation mechanisms for optimal performance and reliability.

The NLG features electric actuation powered by the aircraft engine, allowing seamless retraction and deployment. The MLG utilizes hydraulic actuation for smooth operation, with both systems incorporating uplock and downlock mechanisms to secure the gear in extended or retracted positions. Shock absorption is achieved using oleo struts, which dampen the forces experienced during landing. The system is designed to interface with the cockpit for real-time monitoring and control, ensuring safety and efficiency under varying operational conditions.

Conceptual Design

The hybrid landing gear design incorporates advanced technologies to tackle challenges related to weight, reliability, and aerodynamic performance. The Nose Landing Gear (NLG) retracts into an enclosed bay covered by doors, minimizing aerodynamic drag. It utilizes an electric actuation system with a hex-screw linkage to facilitate the retraction process. In emergency scenarios, the NLG can be manually deployed through a gravity-assisted mechanism, ensuring fail-safe operation.

The Main Landing Gear (MLG) employs hydraulic actuation, enabling partial retraction into streamlined housings and eliminating the need for bay doors. This design choice reduces both weight and system complexity. Both the NLG and MLG are equipped with oleo struts, which combine hydraulic fluid and gas to efficiently absorb landing shocks. The system also features limit switches and position sensors to monitor and display gear status on cockpit indicators, ensuring precise tracking and feedback.

To further enhance safety and redundancy, the system includes a hand-crank mechanism for manual deployment in case of actuation failure. Smooth covers around the partially exposed MLG streamline airflow, reducing drag and increasing the aircraft’s aerodynamic efficiency.

Analyses

Extensive analyses were conducted to validate the design and ensure compliance with operational and regulatory requirements. The aircraft's center of gravity (CG) was determined by following guidelines from Roskam's textbook. The CG positions at maximum take-off weight (MTOW), forward CG, and aft CG are presented in Table 1 above. These CG positions lie within the aircraft's mean aerodynamic chord (MAC) length. For CG calculations, landing gear weights were estimated based on typical values for general aviation aircraft, with **each landing gear sub-assembly weighing 37lb-m**. This approach ensures consistency between the NLG and MLG, differing only in the oleo-pneumatic suspension strengths.

The placement of the MLG and NLG follows recommendations from Roskam. **The resulting longitudinal ground clearance angle is 12.8°**, within the **recommended range of 12-15°**. The system also meets the **longitudinal tip-over criterion** with a **precise 15° angle** from the aft CG to the MLG. The total height of the **MLG**, measured from the base of the tire to the wing, is **50.63in**, and the NLG height is **43.71in**. The MLG, when deployed, extends beneath the wings at 56% of the MAC length.

Figure 6 below showcases the preliminary conceptual kinematics and dimensions for simulation of landing gear retraction and deployment as linkages.

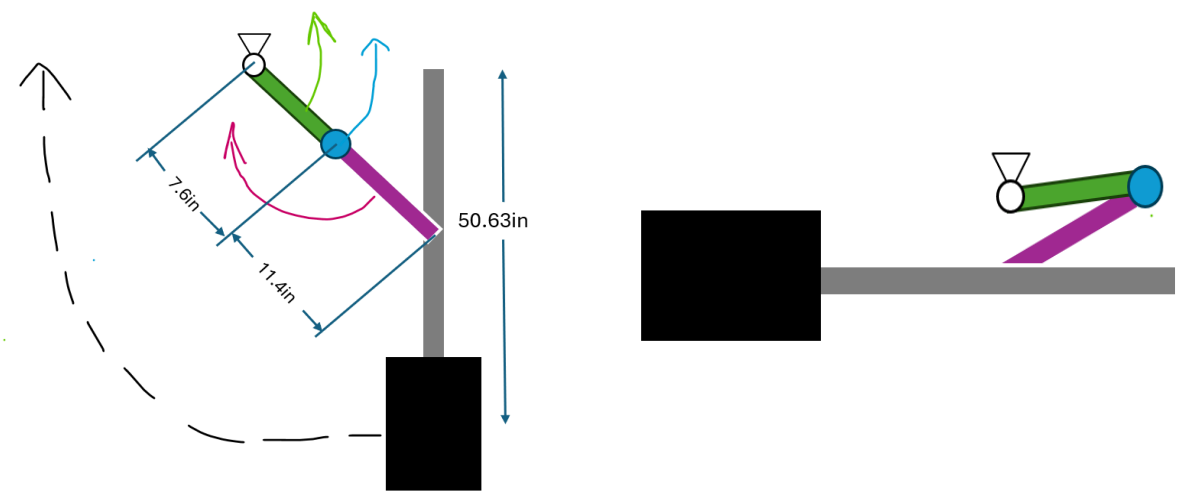

Figure 6: Preliminary MLG and NLG retraction linkage kinematics and dimensions (LEFT - deployed, RIGHT - retracted)

For the kinematic analysis shown above, the lengths are determined based on preliminary sizing from the CAD model and the linkage motion directions are referenced from the Roskam textbook and dynamic linkage simulators. For the NLG and MLG, the same kinematics apply, but the only difference being direction with respect to airflow field. For the NLG, the deployment is parallel to flow, while for MLG, the deployment is lateral to the flow field. The landing gear width was chosen for enhanced load handling and shock absorption.

Additionally, the increased height ensures compliance with the Lateral Ground Clearance Criterion, achieving a **wingtip clearance angle of 28°** relative to the ground, well above the minimum requirement of 5°. Based on the static force calculations in **Table 1** and to optimize load handling with added redundancy, two tires per strut were selected for both the MLG and NLG. Maximum tire loads were calculated accordingly, incorporating a safety factor of 1.25 times the static load. Tire manufacturer specification charts were then referenced to select suitable tire sizes. As a result, the **NLG uses two tires of size 5.00-4**, whilst the **MLG is equipped with 6.00-6 size tires** (two per strut; two struts in total) .

Table 2 below outlines the items and their corresponding values for the landing gear. It provides an overview of the load capacity, strength, and positioning of the center of gravity, illustrating the key parameters influencing the landing gear's performance.

Table 2: Landing Gear Strength, Load, and Centre of Gravity Parameters

Item	Value
MLG - Max Static Load per strut	569 lbm (18,325 lbf)
NLG - Max Static Load	455 lbm (14,657 lbf)
NLG - Min Static Load	299 lbm (9,652 lbf)
NLG – Max. Braking Load	847 lbm (27,302 lbf)
NLG – Stroke Length	8 in
MLG – Stroke Length per strut	7 in
MTOW – CG from front of A/C	110.1 in
Forward CG	105.9 in
Aft CG	113.2 in

Table 3 below is a representation of how the extra weight and components added to the aircrafts affects certain performance parameters.

Table 3: Change in Performance Parameters

Item	Pre-Design Mods Value	Post Design Mods Value
Aircraft MTOW	1342 lb-m	1438 lb-m
Range	450 nm	~ 430 nm
Rate of Climb	530 fpm	460 fpm
Number of Tires Per Strut	1	2

Figures 7 and 8 below depict the CAD model of the aircraft with the landing gear in both extended and retracted positions, as well as the fully extended standalone landing gear.

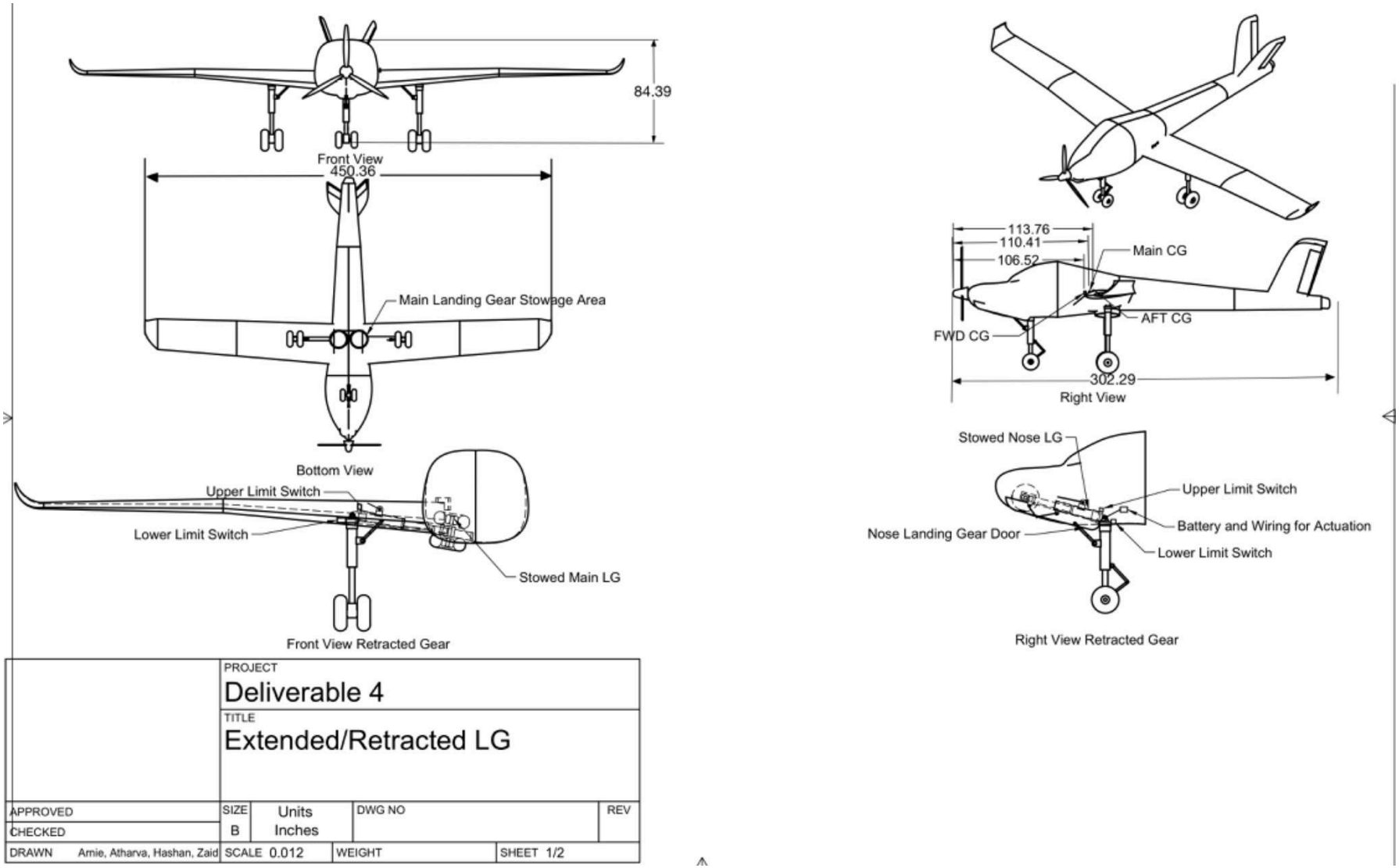

Figure 7: Extended and Retracted Landing Gear System on Aircraft

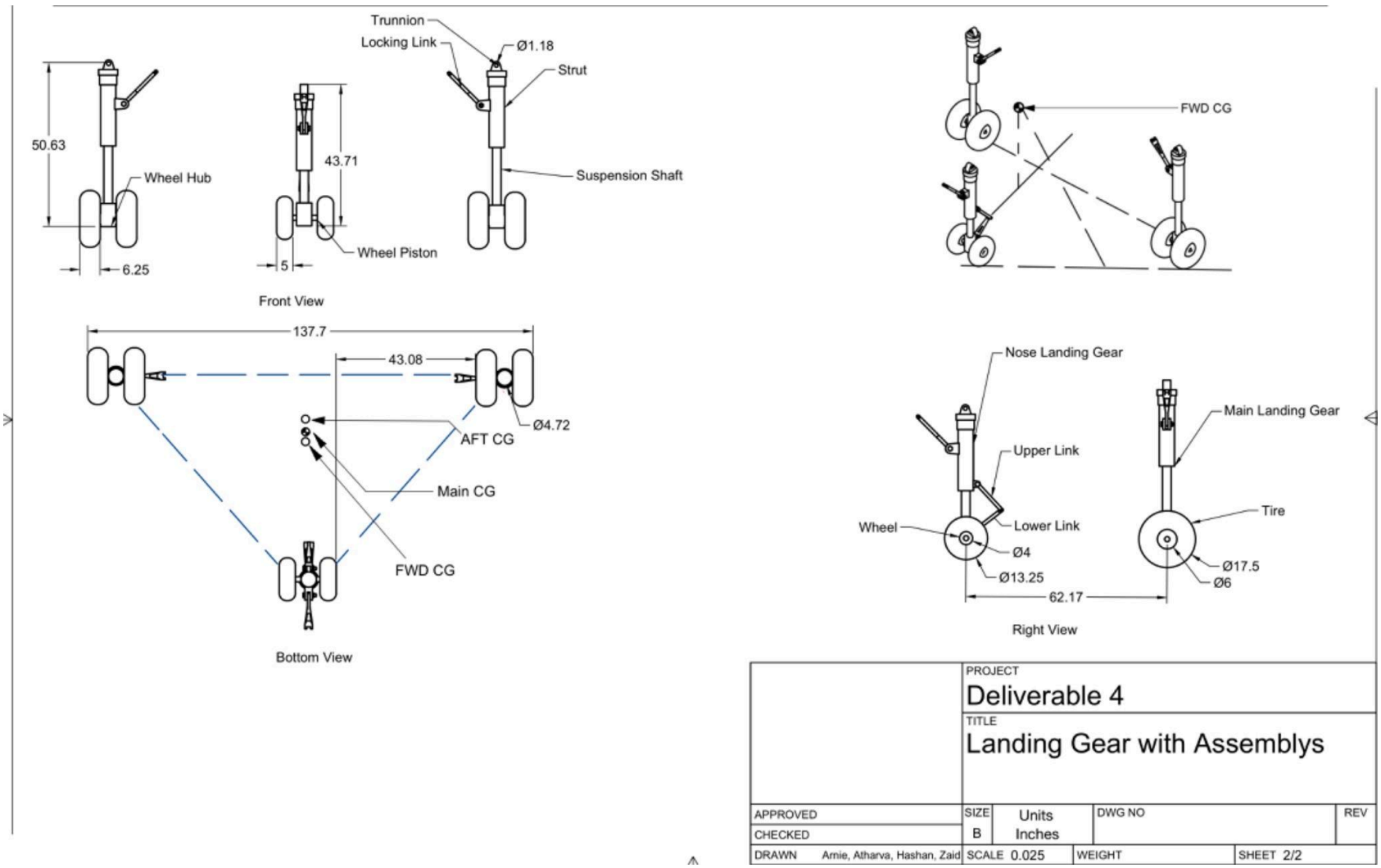

Figure 8: Fully Extended Standalone Landing Gear System

Integration

The hybrid landing gear system is carefully integrated with the aircraft's existing components to ensure smooth operation and safety. These systems are essential for efficient ground handling, take-off, and landing phases, as well as optimizing aerodynamic performance in flight.

Cockpit Interface

The cockpit interface is designed to provide pilots with full control and situational awareness of the landing gear system. A centrally located control lever allows the pilots to deploy or retract the gear with ease. When the gear is operated, cockpit indicators display the current status, showing whether the gear is extended, retracted, or transitioning. These indicators are backed by a fail-safe system, including secondary indicators and warnings, ensuring that any failure is immediately communicated. The interface also integrates a health monitoring system that alerts the pilot to critical issues such as actuator failures, hydraulic pressure drops, or electrical faults. This setup ensures the pilot has reliable and sufficient control over the landing gear system during all phases of operation.

Hydraulic System for MLG

The hydraulic system is the driving force behind the retraction and extension of the main landing gear (MLG). This system includes hydraulic pumps that generate the pressure required to move the gear, fluid reservoirs that maintain a steady supply of hydraulic fluid, and valves that regulate fluid flow to the actuators. When the landing gear is activated, the hydraulic fluid powers pistons that move the MLG struts into position. A reservoir ensures the system remains pressurized, and excess fluid is returned to it during operation. Hydraulic lines and connectors channel the fluid efficiently while maintaining structural integrity under high pressures, typically operating within the 3,000–5,000 psi range. This system ensures smooth and reliable operation of the MLG, even under critical conditions.

Electrical System for NLG

The nose landing gear (NLG) relies on an electric actuation system, which offers lightweight and efficient operation. Powered by the aircraft’s main electrical system, the NLG actuator uses a motor-driven hex-screw mechanism to extend and retract the gear. Position sensors continuously monitor the gear's status and relay this information to cockpit indicators. In emergencies, the NLG includes a gravity-assisted manual deployment mechanism, allowing the gear to fall into place safely if the primary system fails. The electric system operates at a standard 28V DC, ensuring compatibility with the aircraft's power distribution system, and it is designed to handle varying current demands efficiently. This system combines reliability with simplicity, offering low maintenance and precise control.

Structural Integration

The landing gear system is structurally integrated into the aircraft at mounting points to distribute loads evenly. The nose landing gear attaches to the forward fuselage, while the main landing gear is mounted to the wing spars. These mounting points are designed to withstand the significant loads encountered during landing and taxiing, ensuring the airframe remains stable. Supports are fitted to meet operational stresses, including vertical impact forces, drag loads, and lateral forces during crosswind landings. Additionally, the placement of the gear has been optimized to maintain the aircraft's center of gravity (CG) within acceptable limits, ensuring stability and maneuverability during all flight phases.

Maintenance and Accessibility

The hybrid system simplifies maintenance by integrating features that enhance component accessibility and reduce complexity. The main landing gear's partial retraction eliminates the need for complex bay doors, while streamlined fairings reduce drag. Key components such as actuators, pistons, and sensors are placed in accessible locations, making it easy for inspections and repairs. The system's design also includes features like brake wear indicators and hydraulic fluid monitoring, allowing for proactive maintenance. By reducing the time and effort required for servicing, the system ensures operational reliability and minimizes downtime.

Figure 9 below represents the system breakdown tree that analyzes and illustrates the hierarchy of the landing gear system embedded in this light sport aircraft. The figure is colour-coded to differentiate the elements; assemblies are shown in blue, components in geren, and parts in yellow

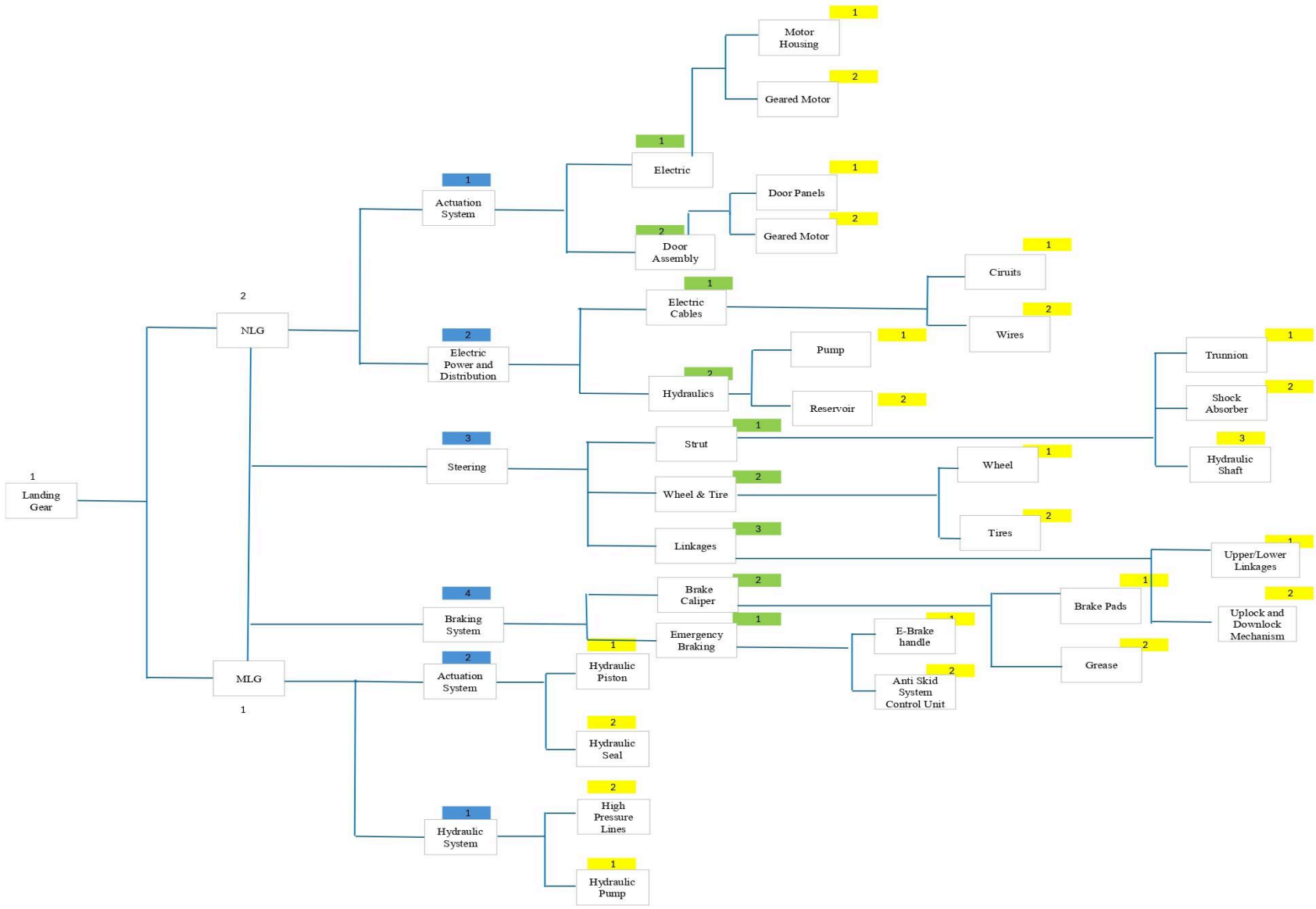

Figure 9: Landing Gear System Breakdown

Table 4 below presents the FMEA summary. The chosen subsystem for analysis is steering, as it is critical for the safety, performance, and durability of the aircraft. Since most impact forces occur during landing, the steering components must be robust and reliable to withstand the excess load and prevent failure.

Table 4: FMEA Steering Summary

FMEA No.		**Failure Modes, Effects, and Criticality Analysis Nose and Main Landing Gear**				Sheet No. 1
Project No.	7					Prepared By: Arnie Nambiar, Hashan Dhaliwal
System No.	1					Checked By: Atharva Bendre
Subsystem No.	1					Approved By: Zaid Al-Lahham
Prob. Interval:	1					Date: 6-12-2024
Target Code: P - Personal, E - Equipment, T - Downtime, R - Products, D - Data, V - Environment						
ID No.	**Item/ Functional ID**	**Failure Mode**	**Failure Cause**	**Failure Event**	**Target**	**Action Req'd**
01-01-03-01 & 01-02-03-01	Strut	Buckling / Collapse	Material fatigue	Complete buckling of the landing gear during landing	P, E	Use high-strength materials, routine maintenance
01-01-03-01-02 & 01-02-03-01-02	Shock Absorber	Hydraulic fluid loss	Seal failure, excessive wear	Loss of damping capability in the suspension system	E, T	Routine maintenance, replace seals at required intervals
01-01-03 & 01-02-03	Steering	Corrosion	Moisture, chemicals, salt exposure	Gradual weakning of structural integrity	E, V	Routine inspections, apply anti-corrosive coatings
01-01-03-02-01 & 01-02-03-02-01	Tire	Tread loss due to wear	cyclic friction due to take-off, taxi and landing	Loss of aircraft maneuvrability on ground	P, E	Re-treading of tire or complete tire replacement based on visual thickness of the tire
01-01-03-02-01 & 01-02-03-02-01	Tire	Blowout	Overloading or runway debris punturing the tire	Loss of control during takeoff and lading	P, E	Routine & visual inspections, ensure good tire quality, proper sizing
01-01-04 & 01-02-04	Braking System	Overheating	Excessive loading, excessive use, improper cooling	Brake fade, leading to the loss of braking power	P, E, T	Monitor brake usage, use high-quality & heat-resistant brake pads, ensure cooling duct are obstruction-free
01-01-04-02-01 & 01-02-04-02-01	Pads	Excessive wear of brake pads	Prolonged use without replacement.	Reduced brake efficiency, increased stopping distance.	E, T	Replace at each maintenance interval
01-01-04-02-02 & 01-02-04-02-02	Rotor Discs	Rotor Warping (Heat Distortion)	Prolonged hard braking without servicing	Vibration when braking and reduced braking performance	P, E	Perform regular servicing and use a cooling mechanism when brakes are in use
01-01-03-02-01 & 01-02-03-02-01	Wheel	Bearing failure	Improper lubrication, corrosion	Increased friction, wheel lock up, or failure	E, T	Ensure proper lubrication, greater tightening of nuts, use high stress bearings
01-01-03-03-01 & 01-02-03-03-01	Upper/Lower Linkage	Linkage breakdown	Linkage Bending	Unequal and unusual load and torque transfer, leading retraction failure	E	Choose material suited to last one landing gear life cycle without ultimate failure
01-02-03-02-01 & 01-02-03-02-01	Wheel	Wheel hub cracking	Stress concentrations or manufacturing defects	Wheel detachment or collapse during landing or taxing.	E, T	Check for uneven wear for tires, regular inspection of cracks in wheels, avoid aircraft overloading, regular cleaning and disassembly of the wheel and tire
01-01-03-03-02 & 01-02-03-03-02	Uplock/downlock mechanism	Locking mechanism jamming	Debirs or wear in the locking system	Gear fails to lock in the deployed or retracted position.	E, T	Inspect for cracks, structural disfigurement or obstructions before flight.
01-01-03-01-01 & 01-02-03-01-01	Trunnion	Trunnion cracking or detachment	Fatigue from cycle loading during takeoffs and landing	Gear separation from the airframe, causing catastrophic failure	P, E	Monitor bending or structural deficiencies. Replace entirely at each maintenance, if found.
01-01-03-01-03 & 01-02-03-01-03	Hydraulic Shaft	Shaft Fracture	Caused by fatigue, overloading or stress concentration at one point	Failure to move which causes the landing gear to collapse	E, T	Regular fluid inspections, along with corrosion prevention methods

Feasibility Assessment

Considering the limited budget and time-constrained resources, the results of this project only led to partial development of the actual landing gear system. Substantial work remains on detailed calculations, advanced component sizing and detailed design. Additionally, once the design is completed, it is subjected to comprehensive retraction and load bearing tests, many of which act as a means to achieve certification with regulatory bodies for the landing gear implementation.

Currently, preliminary sizing and load estimation suggest that the proposed design has reasonable structural integrity, with large safety margins identified for typical operating loads. Sizing and load estimation were done based on several assumptions, such as constant friction coefficients, no heat losses, and no consideration for wear and tear of parts due to cyclic loading of the landing gear.Although preliminary design was completed using CAD, it lacked detailed stress analysis using Finite Element Methods (FEM), and aerodynamic analysis such as CFD. Therefore, while the preliminary calculations were reasonable and the corresponding CAD was implemented accordingly, advanced analysis would require additional investments in time and resources to implement a robust landing gear model.

The current landing gear project lacks the means to practically test the preliminary model against regulatory requirements, although these requirements are analytically accounted for. As a result, the landing gear remains as a concept until advanced calculations are conducted and a plan is established to certify the system with Transport Canada and the US FAA. However, from the perspective of preliminary development, the Retractable Landing Gear Project can be approved to proceed with advanced and detailed analysis.

Table 5: Performance comparison for LSA's against SYA Corp

Aircraft Model	Max Takeoff Weight	Empty Weight	Wingspan	Length	Max Speed	Cruise Speed	Stall Speed	Climb Rate	Fuel Capacity	Range	Engine Power	Takeoff Distance	Landing Distance	Max Operating Altitude	Load Factor
SYA CORP	1438 lbs	827 lbs	37.5 ft	25.19 ft	120 kts (222 km/h)	100 kts (185 km/h)	48 kts	460 ft/min	15.85 gal (60 L)	430 miles	141 hp	850 ft	1000ft	10000 ft	3.8 G's
Tecnam P92	1,320 lbs (600 kg)	770 lbs (350 kg)	30 ft (9.1 m)	22 ft (6.7 m)	118 kts (218 km/h)	100 kts (185 km/h)	47 kts (87 km/h)	900 ft/min (4.5 m/s)	24 gal (91 L)	550 miles (885 km)	100 hp	1,000 ft (305 m)	1,000 ft (305 m)	12,000 ft (3,660 m)	3.8 G's
Cessna 162 Skycatcher	1,320 lbs (600 kg)	750 lbs (340 kg)	29 ft (8.8 m)	20 ft (6.1 m)	118 kts (218 km/h)	103 kts (191 km/h)	45 kts (83 km/h)	850 ft/min (4.3 m/s)	24 gal (91 L)	400 miles (640 km)	100 hp	1,500 ft (457 m)	1,000 ft (305 m)	14,000 ft (4,267 m)	3.8 G's
Flight Design CTLS	1,320 lbs (600 kg)	720 lbs (327 kg)	30 ft (9.1 m)	20 ft (6.1 m)	120 kts (222 km/h)	110 kts (204 km/h)	40 kts (74 km/h)	1,200 ft/min (6.1 m/s)	19 gal (72 L)	900 miles (1,440 km)	100 hp	1,000 ft (305 m)	1,000 ft (305 m)	14,000 ft (4,267 m)	3.8 G's
PiperSport	1,320 lbs (600 kg)	800 lbs (363 kg)	27 ft (8.2 m)	20 ft (6.1 m)	120 kts (222 km/h)	100 kts (185 km/h)	50 kts (93 km/h)	800 ft/min (4.1 m/s)	24 gal (91 L)	500 miles (800 km)	100 hp	1,200 ft (366 m)	1,200 ft (366 m)	10,000 ft (3,048 m)	3.8 G's
Remos GX	1,320 lbs (600 kg)	760 lbs (345 kg)	31 ft (9.5 m)	20 ft (6.1 m)	115 kts (213 km/h)	100 kts (185 km/h)	45 kts (83 km/h)	900 ft/min (4.5 m/s)	20 gal (75 L)	500 miles (800 km)	100 hp	1,000 ft (305 m)	800 ft (244 m)	12,000 ft (3,660 m)	3.8 G's
Icon A5	1,430 lbs (650 kg)	950 lbs (431 kg)	34 ft (10.4 m)	22 ft (6.7 m)	109 kts (202 km/h)	90 kts (167 km/h)	45 kts (83 km/h)	1,000 ft/min (5.1 m/s)	19 gal (72 L)	400 miles (640 km)	125 hp	1,500 ft (457 m)	1,200 ft (366 m)	10,000 ft (3,048 m)	3.8 G's

Discussion

The group project was successful due to effective communication, collaboration, and structured time management. Weekly PA sessions and progress meetings every two days ensured smooth task delegation and timely completion of deliverables. The group maintained an open-floor approach, encouraging everyone to contribute ideas on the design of the landing gear system, which resulted in a collaborative environment. Comprehensive research into existing landing gear systems provided valuable insights for the design process.

However, challenges arose in skill development and task delegation. Tasks were assigned based on team members' least comfortable topics, leading to confusion and inefficiency. Delays in starting deliverables, due to excessive brainstorming, caused rushed work and compromised quality. Misunderstandings about project requirements resulted in rework, as the team often made assumptions instead of seeking clarification from the TAs or professor. The initial Gantt chart plan led to uneven group work, but communication later resolved this issue.

Key lessons learned included assigning tasks based on individual strengths and interests to improve confidence and efficiency. The importance of having a project integrator to oversee progress and resolve issues became evident, helping the group stay on track. Regular consultation with the TA for clarification and guidance was crucial to align with project expectations. The group also learned that while brainstorming was useful, translating ideas into actionable steps and starting work earlier was essential to avoid last-minute pressure. Prioritizing in-person meetings allowed the group to collaborate more efficiently and produce higher-quality work.

Conclusion

For the future development of the landing gear system, it is recommended that further design iterations involve close collaboration with regulatory bodies to ensure compliance with all certification requirements. Additionally, to fully validate the design, a detailed Finite Element Analysis (FEA) of the structural components and simulations of retracting and extending cycles would be necessary. In terms of practical implications, the introduction of a retractable landing gear system will offer substantial benefits in terms of reducing aerodynamic drag and improving fuel efficiency, a crucial aspect for light sport aircraft. However, this improvement in performance comes with increased complexity and cost compared to the current fixed landing gear configuration. A comprehensive cost-benefit analysis shall be conducted to assess the trade-offs between the performance gains, additional system complexity, and overall costs of development and maintenance. This analysis would also need to consider the impact on aircraft weight, maintenance procedures, and potential modifications to existing aircraft designs.

Overall, the work completed in this project serves as a foundation for the further development of the retractable landing gear system. While the conceptual design is promising, significant additional work in terms of detailed structural analysis, regulatory compliance, and system integration is required to finalize the design and ensure the feasibility of its implementation in a light sport aircraft.

References

[1]J. Roskam, *Airplane design. Part II, Preliminary configuration design and integration of the propulsion system*. Lawrence, Kan.: Darcorporation, 2018.

[2]J. Roskam, *Airplane design. Part IV, Layout design of landing gear and systems*. Lawrence, Kan.: Darcorporation, 2018.

[3]Transport Canada, "Canadian Aviation Regulations (SOR/96-433)," *AARBH 14882767*, Jan. 25, 2021. https://tc.canada.ca/en/corporate-services/acts-regulations/list-regulations/canadian-aviation-regulations-sor-96-433

[4]FAA, "FAA Regulations | Federal Aviation Administration," *Faa.gov*, 2020. https://www.faa.gov/regulations_policies/faa_regulations

[5]"Safran Landing Systems," *Safran*, 2024. https://www.safran-group.com/companies/safran-landing-systems

[6]"Canadian Light Sport Aircraft Association," *Clsaa.org*, 2024. https://www.clsaa.org/ (accessed Dec. 06, 2024).

[7]"Goodyear Aviation Tires," *Goodyearaviation.com*, 2024. https://www.goodyearaviation.com/ (accessed Dec. 06, 2024).

[8]Infosys Limited, "Aircraft Landing Gear Design & Development," 2015. Accessed: Sep. 2024. [Online]. Available: https://www.infosys.com/engineering-services/white-papers/Documents/landing-gear-design-and-development.pdf

[9]S. Chai and W. Mason, "Multidiscipllnary Analysis and Design Center for Advanced Vehicles," 1994. Available: https://ntrs.nasa.gov/api/citations/19970031272/downloads/19970031272.pdf

[10]C. Beyrend, "DC-3 Landing Gear Systems," *YouTube*, Apr. 02, 2023. https://youtu.be/38tGhFjyl5g?si=b8DrtcLZ3VJLPIW4 (accessed Dec. 06, 2024).

[11]"Seversky P-35," *National Museum of the United States Air ForceTM*. https://www.nationalmuseum.af.mil/Visit/Museum-Exhibits/Fact-Sheets/Display/Article/196315/seversky-p-35/

[12]R. Noli and J. M. McKay, "THEORETICAL DYNAMIC ANALYSIS OF THE LANDING LOADS ON A VEHICLE WITH A TRICYCLE LANDING GEAR ," Aug. 1967. Available: https://ntrs.nasa.gov/api/citations/19670023065/downloads/19670023065.pdf

[13]"Landing Gear - an overview | ScienceDirect Topics," *www.sciencedirect.com*. https://www.sciencedirect.com/topics/materials-science/landing-gear

[14]"US5228541A - Aircraft brake wear limit indicator having integral configuration control and method - Google Patents," *Google.com*, Dec. 18, 1991. https://patents.google.com/patent/US5228541A/en

[15]"Parking Brake," *Aopa.org*, Dec. 2024. https://www.aopa.org/news-and-media/all-news/2024/january/flight-training-magazine/how-it-works-parking-brake