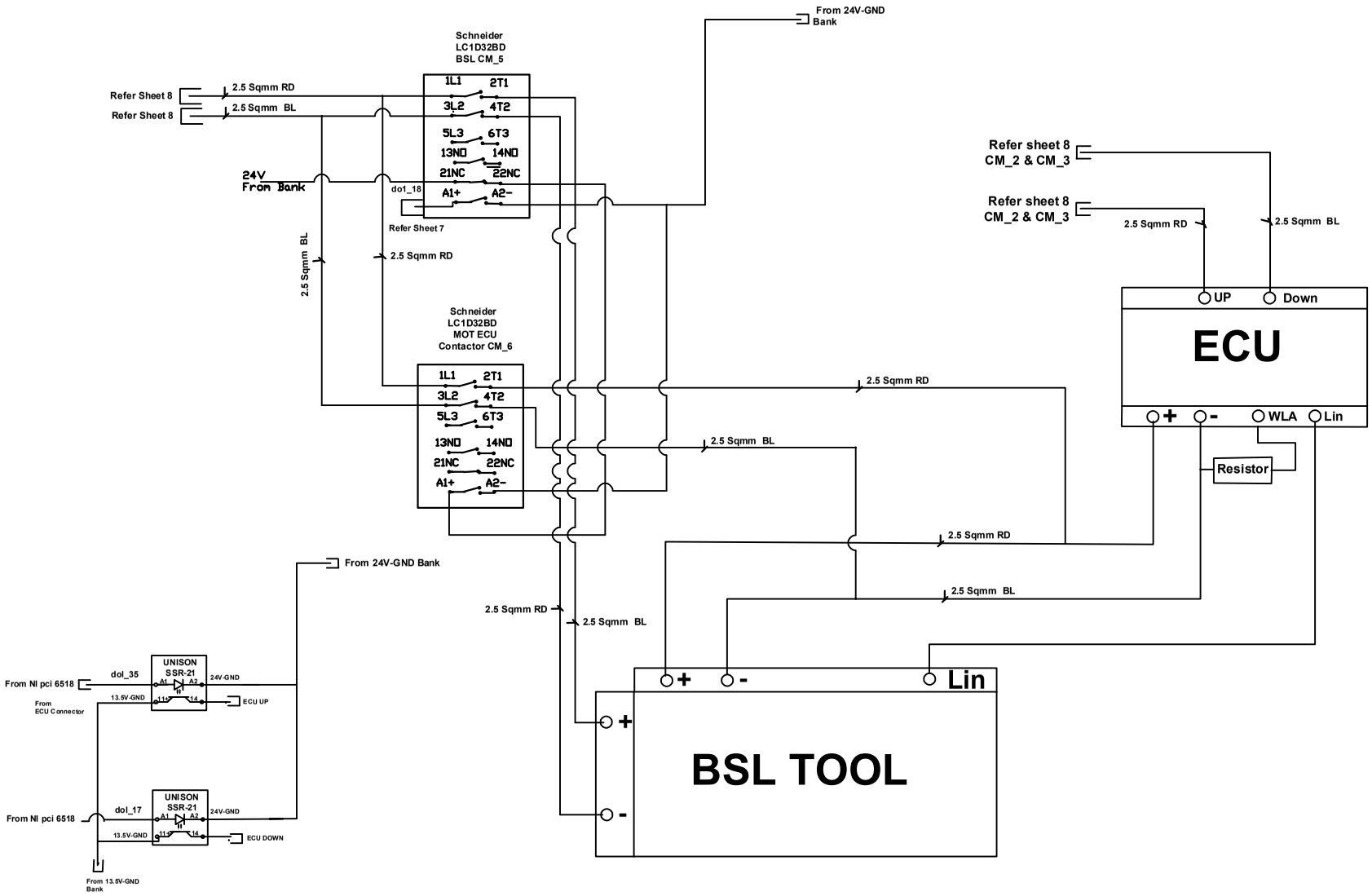

sasyaka Custom Engineering Solutions

All information contained here is the property of SASYAKA ENGINEERING SOLUTIONS PVT. LTD.,BANGALORE
No part of this may be transferred to a third party without express consent.

NO	REVISION DETAILS	DATE	NAME
1			
2			
3			
4			
5			
6			
7			
8			

	DATE	NAME
DRAWN BY	31/03/2020	
CHECKED BY		

SCALE -1:1

DRAWING NAME
Anti Pinch Wiring

PROJECT NO
1929

SHEET
14

NOTE :

1. BR Indicates Brown Wire
2. BU Indicates Blue Wire