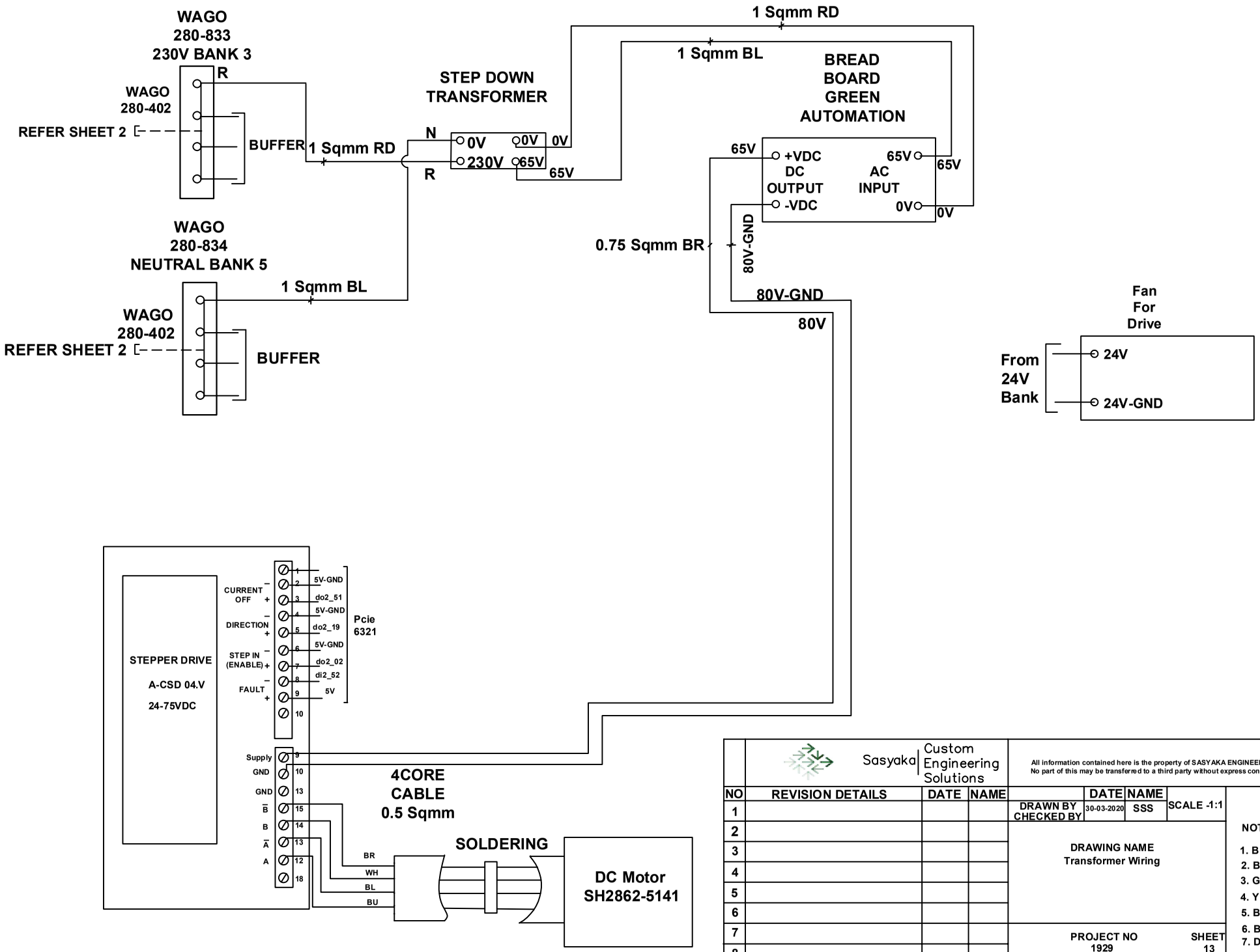

Sasyaka | Custom Engineering Solutions

All information contained here is the property of SASYAKA ENGINEERING SOLUTIONS PVT. LTD.,BANGALORE
No part of this may be transferred to a third party without express consent.

NO	REVISION DETAILS	DATE	NAME
1			
2			
3			
4			
5			
6			
7			
8			

	DATE	NAME
DRAWN BY	30-03-2020	SSS
CHECKED BY		

SCALE -1:1

DRAWING NAME
Transformer Wiring

PROJECT NO
1929

SHEET
13

NOTE :

1. BR Indicates Brown Wire
2. BU Indicates Blue Wire
3. GR Indicates Green Wire
4. YL Indicates Yellow Wire
5. BL-1 Indicates Black No 1 Wire
6. BL-2 Indicates Black No 2 Wire
7. Dotted Line Indicates Wago 280-402