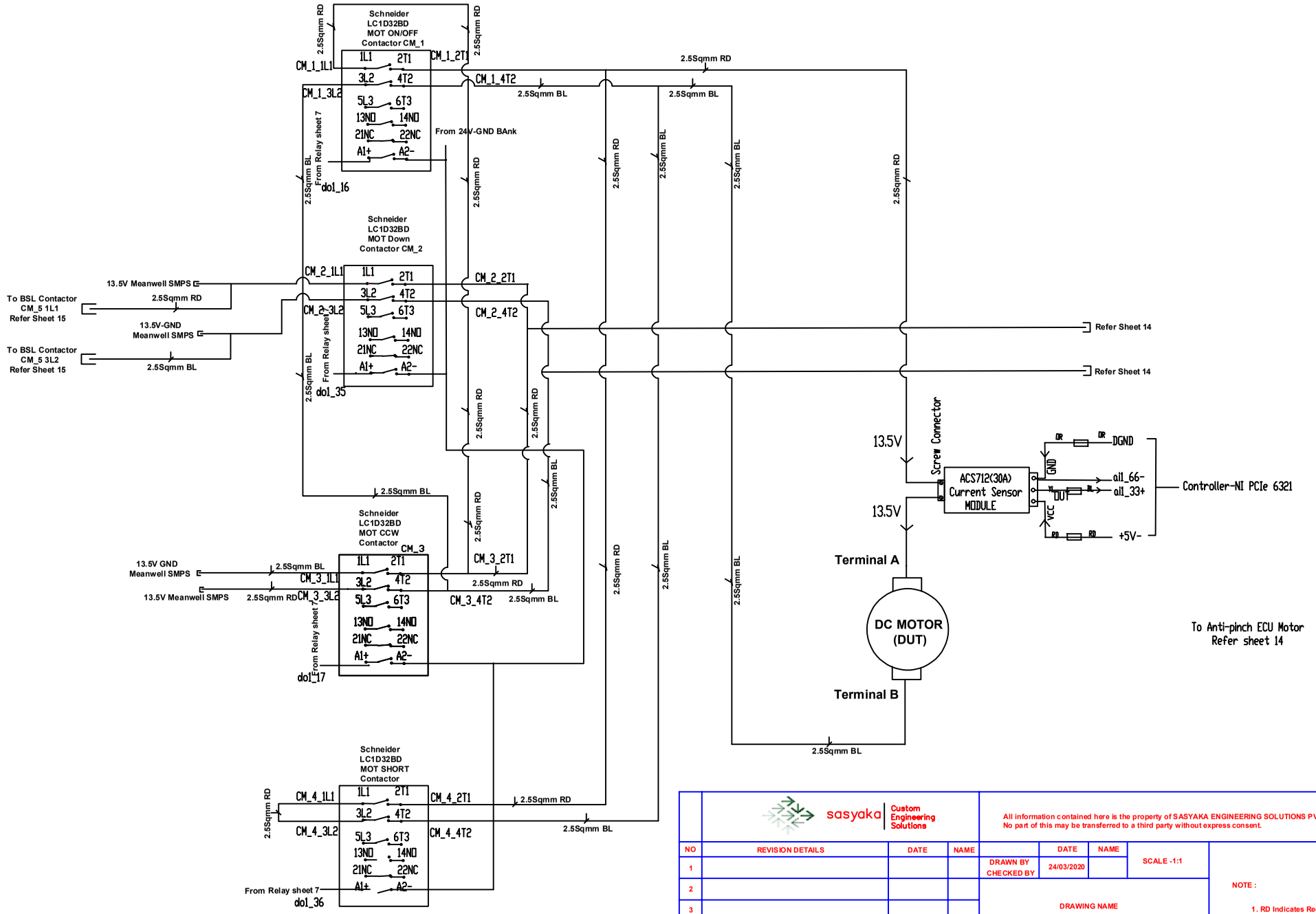

sasyaka Custom Engineering Solutions

All information contained here is the property of SASYAKA ENGINEERING SOLUTIONS PVT. LTD.,BANGALORE
No part of this may be transferred to a third party without express consent.

NO	REVISION DETAILS	DATE	NAME
1			
2			
3			
4			
5			
6			
7			
8			

	DATE	NAME
DRAWN BY	24/03/2020	
CHECKED BY		

SCALE -1:1

DRAWING NAME
DIGITAL OUTPUT(Contactor wiring & Current Sensor)

PROJECT NO
1929

SHEET
08

NOTE :

1. RD Indicates Red Wire
2. BL Indicates Black Wire
3. BU Indicates Blue Wire
4. BR Indicates Brown Wire
5. DUT Indicates Device Under Test