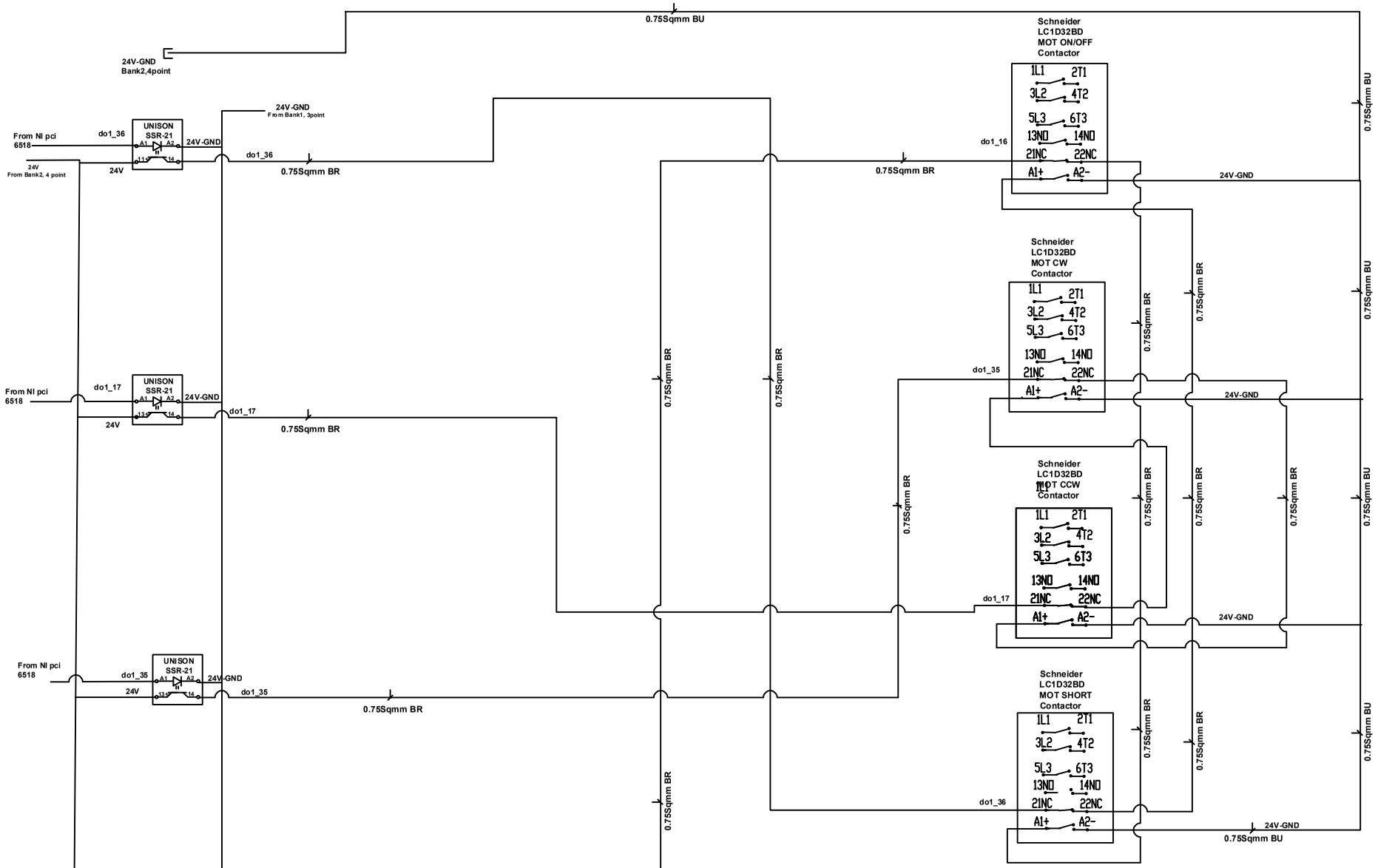

sasyaka Custom Engineering Solutions

All information contained here is the property of SASYAKA ENGINEERING SOLUTIONS PVT. LTD.,BANGALORE
No part of this may be transferred to a third party without express consent.

NO	REVISION DETAILS	DATE	NAME
1			
2			
3			
4			
5			
6			
7			
8			

	DATE	NAME	
DRAWN BY	24/03/2020	SSS	SCALE -1:1
CHECKED BY			

DRAWING NAME
Digital Output Wiring

PROJECT NO 1929

SHEET 09

NOTE :

1. BR Indicates Brown Wire
2. BU Indicates Blue Wire