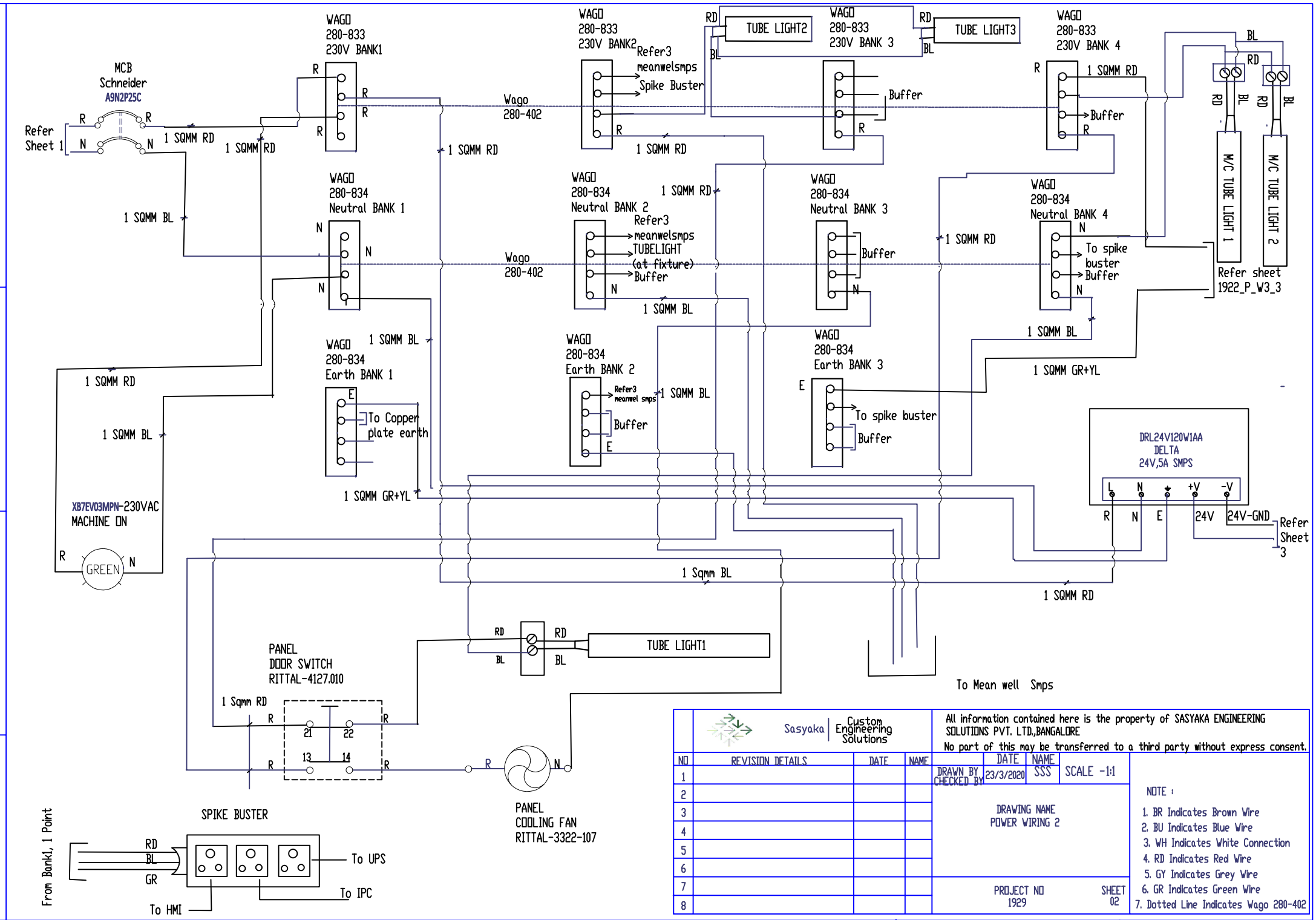

Sasyaka | Custom Engineering Solutions

All information contained here is the property of SASYAKA ENGINEERING SOLUTIONS PVT. LTD.,BANGALORE
No part of this may be transferred to a third party without express consent.

NO	REVISION DETAILS	DATE	NAME
1			
2			
3			
4			
5			
6			
7			
8			

	DATE	NAME
DRAWN BY	23/3/2020	SSS
CHECKED BY		

SCALE -1:1

DRAWING NAME
POWER WIRING 2

PROJECT NO
1929

SHEET
02

NOTE :

1. BR Indicates Brown Wire
2. BU Indicates Blue Wire
3. WH Indicates White Connection
4. RD Indicates Red Wire
5. GY Indicates Grey Wire
6. GR Indicates Green Wire
7. Dotted Line Indicates Wago 280-402