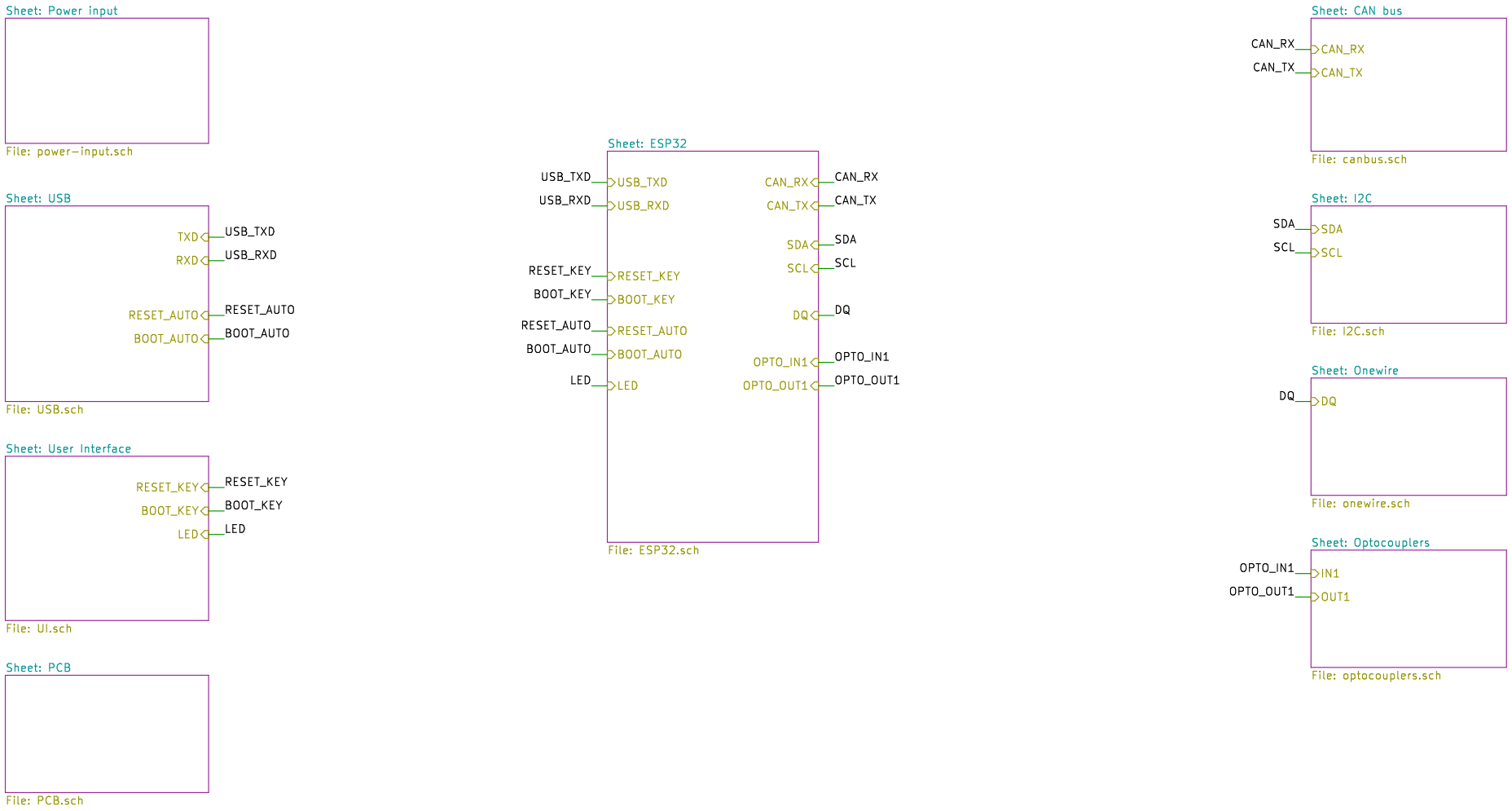

SH-ESP32 is licensed under CC BY-SA 4.0.
To view a copy of this license, visit
https://creativecommons.org/licenses/by-sa/4.0

Hat Labs Ltd

Sheet: /
File: SH-ESP32.sch

Title: Sailor Hat with ESP32

Size: A4	Date: 2021-02-18	**Rev: 0.3.1**
KiCad E.D.A. kicad (5.1.9-0-10_14)		Id: 1/10

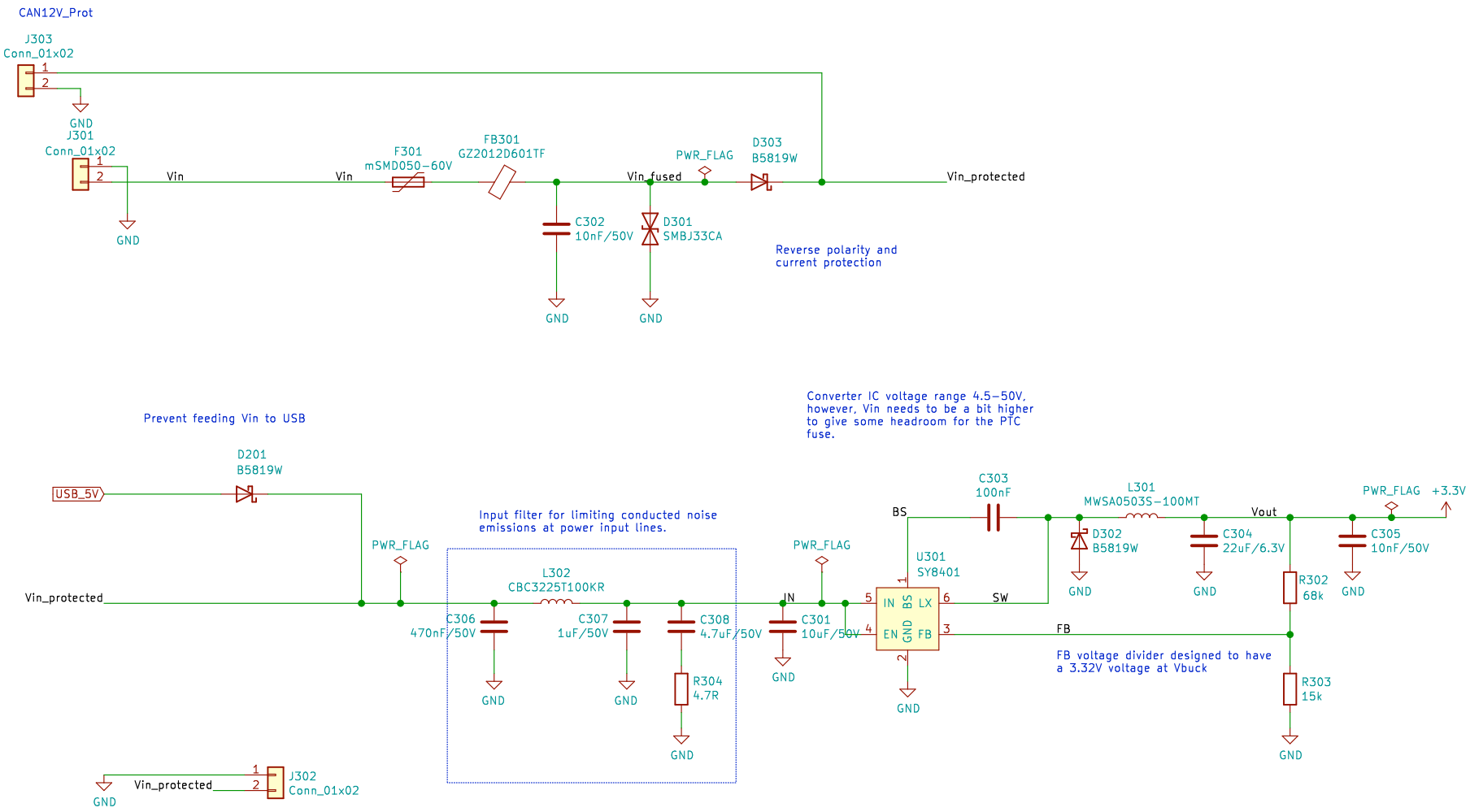

SH-ESP32 is licensed under CC BY-SA 4.0.
To view a copy of this license, visit
https://creativecommons.org/licenses/by-sa/4.0

Hat Labs Ltd

Sheet: /Power input/
File: power-input.sch

Title: Sailor Hat with ESP32

Size: A4	Date: 2021-02-18	**Rev: 0.3.1**
KiCad E.D.A. kicad (5.1.9-0-10_14)		Id: 2/10

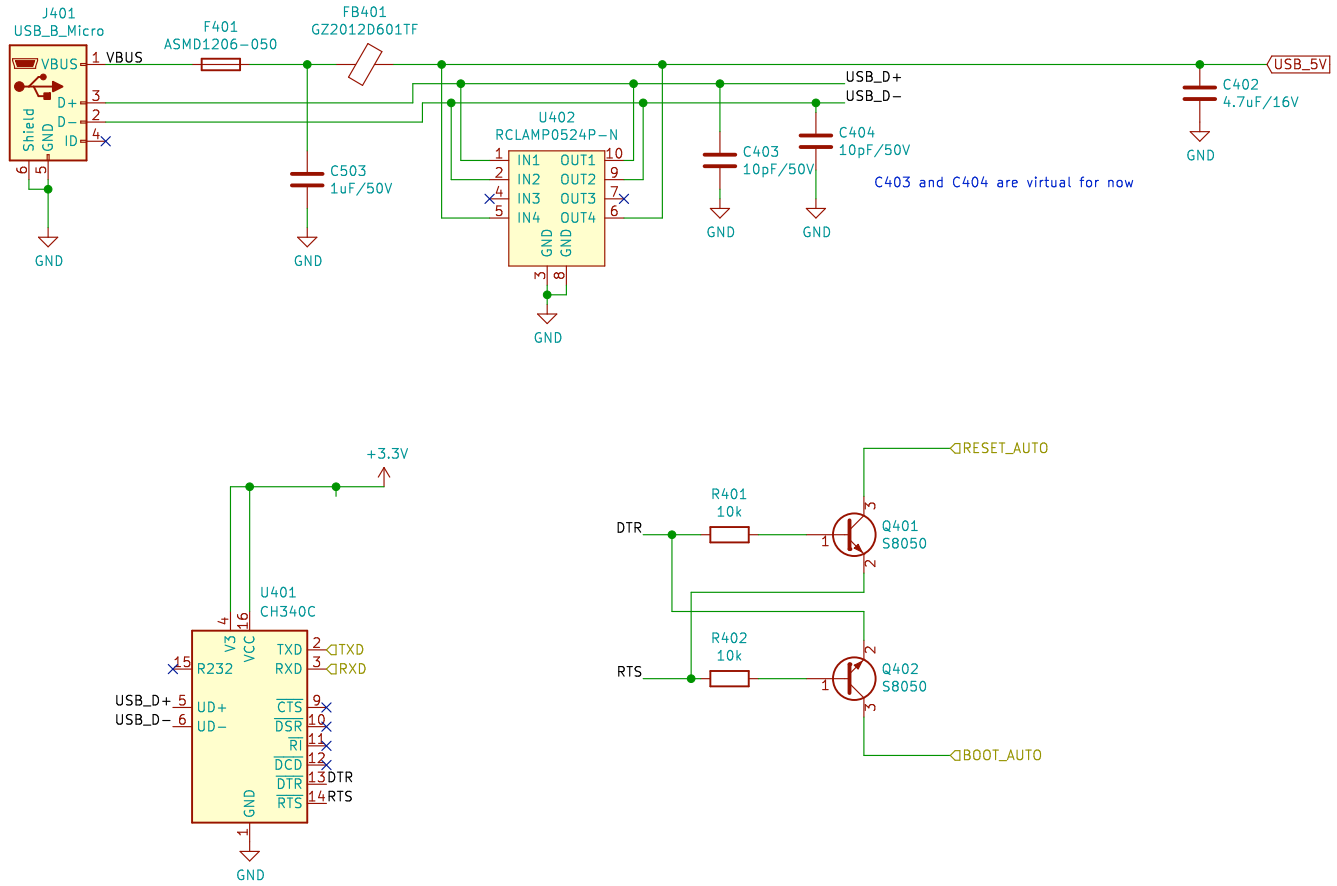

SH−ESP32 is licensed under CC BY−SA 4.0.
To view a copy of this license, visit
https://creativecommons.org/licenses/by−sa/4.0
Hat Labs Ltd

Sheet: /USB/
File: USB.sch

Title: Sailor Hat with ESP32

Size: A4	Date: 2021−02−18	**Rev: 0.3.1**
KiCad E.D.A. kicad (5.1.9−0−10_14)		Id: 3/10

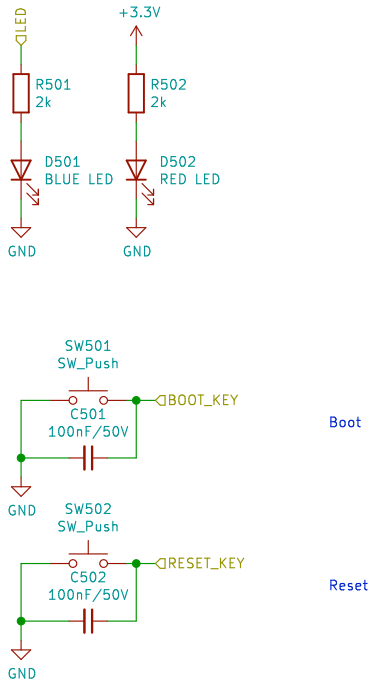

SH-ESP32 is licensed under CC BY-SA 4.0.
To view a copy of this license, visit
https://creativecommons.org/licenses/by-sa/4.0

Hat Labs Ltd

Sheet: /User Interface/
File: UI.sch

Title: Sailor Hat with ESP32

Size: A4	Date: 2021-02-18	**Rev: 0.3.1**
KiCad E.D.A. kicad (5.1.9-0-10_14)		Id: 4/10

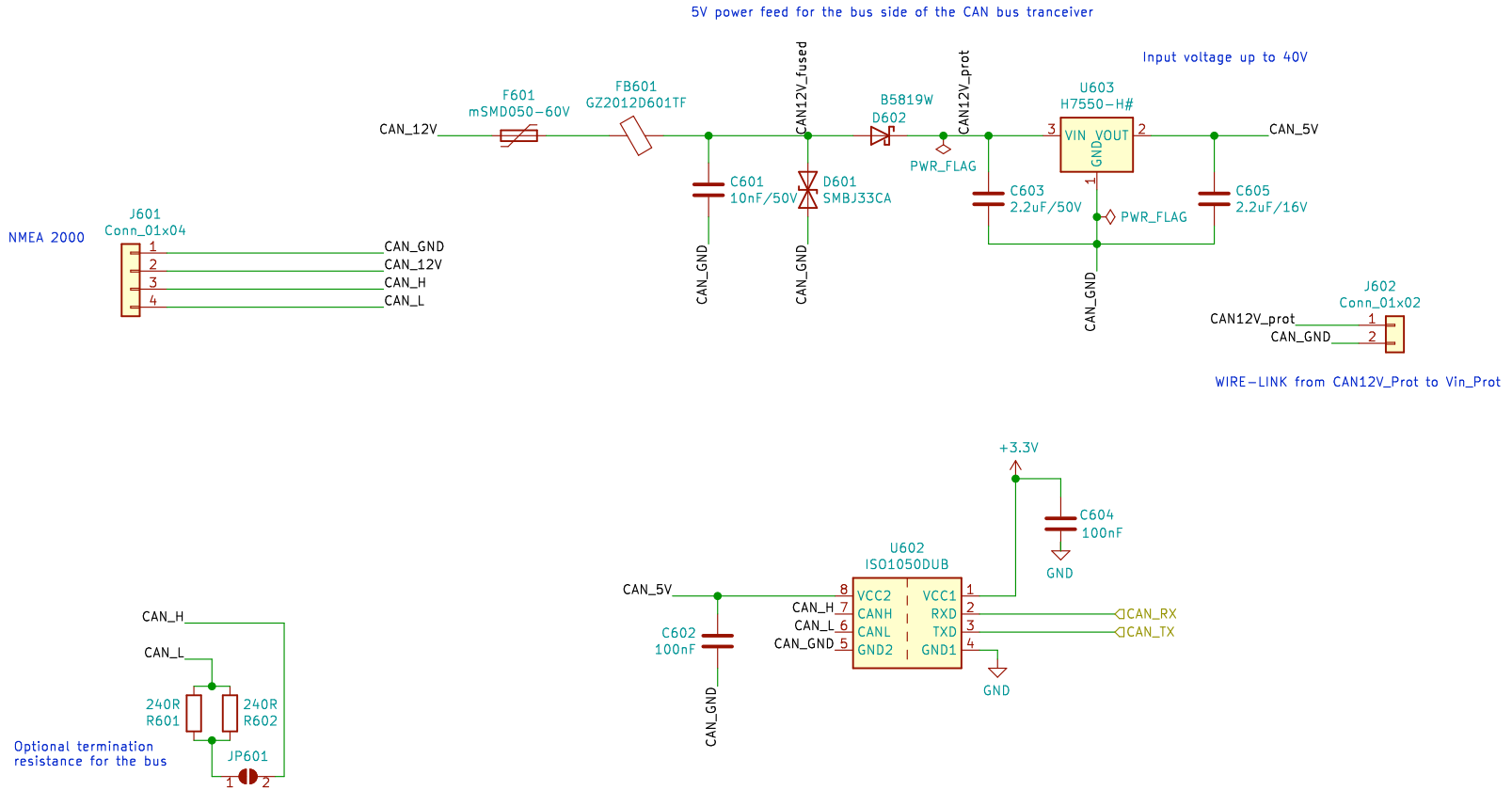

SH-ESP32 is licensed under CC BY-SA 4.0.
To view a copy of this license, visit
https://creativecommons.org/licenses/by-sa/4.0
Hat Labs Ltd

Sheet: /CAN bus/
File: canbus.sch

Title: Sailor Hat with ESP32

Size: A4	Date: 2021-02-18	**Rev: 0.3.1**
KiCad E.D.A. kicad (5.1.9-0-10_14)		Id: 5/10

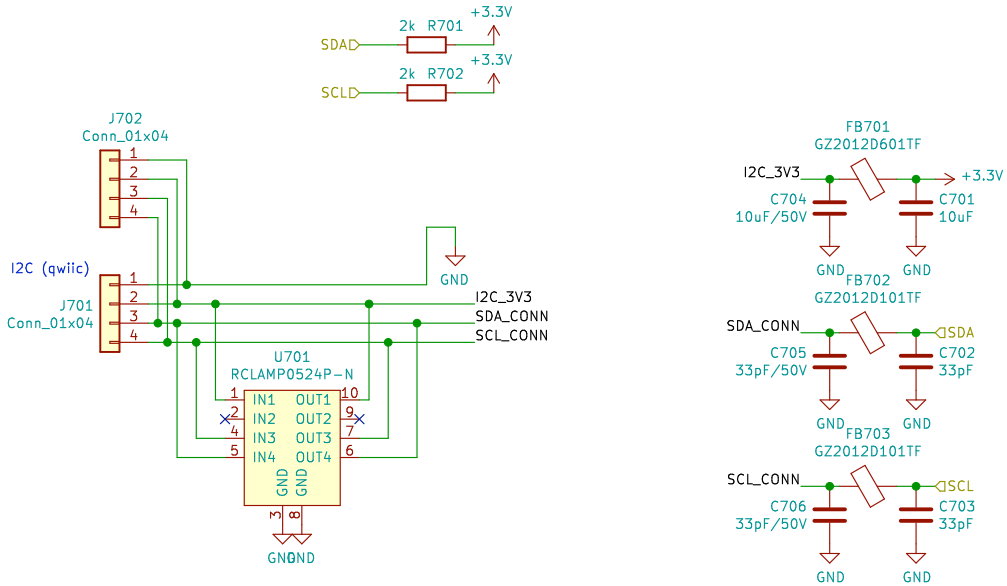

SH-ESP32 is licensed under CC BY-SA 4.0.
To view a copy of this license, visit
https://creativecommons.org/licenses/by-sa/4.0

Hat Labs Ltd

Sheet: /I2C/
File: I2C.sch

Title: Sailor Hat with ESP32

Size: A4	Date: 2021-02-18	**Rev: 0.3.1**
KiCad E.D.A. kicad (5.1.9-0-10_14)		Id: 6/10

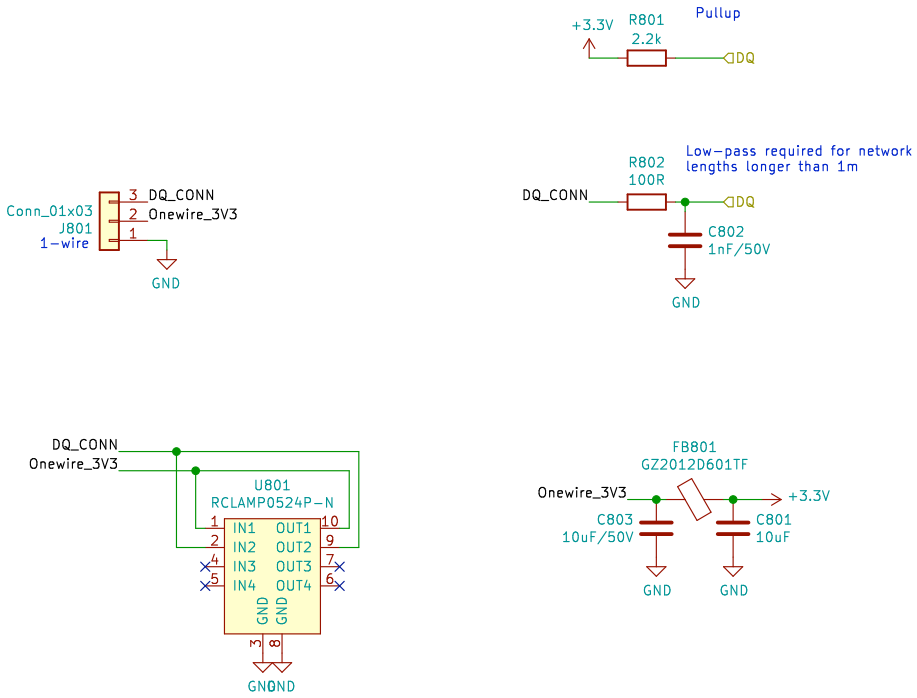

SH-ESP32 is licensed under CC BY-SA 4.0.
To view a copy of this license, visit
https://creativecommons.org/licenses/by-sa/4.0
Hat Labs Ltd

Sheet: /Onewire/
File: onewire.sch

Title: Sailor Hat with ESP32

Size: A4	Date: 2021-02-18	**Rev: 0.3.1**
KiCad E.D.A. kicad (5.1.9-0-10_14)		Id: 7/10

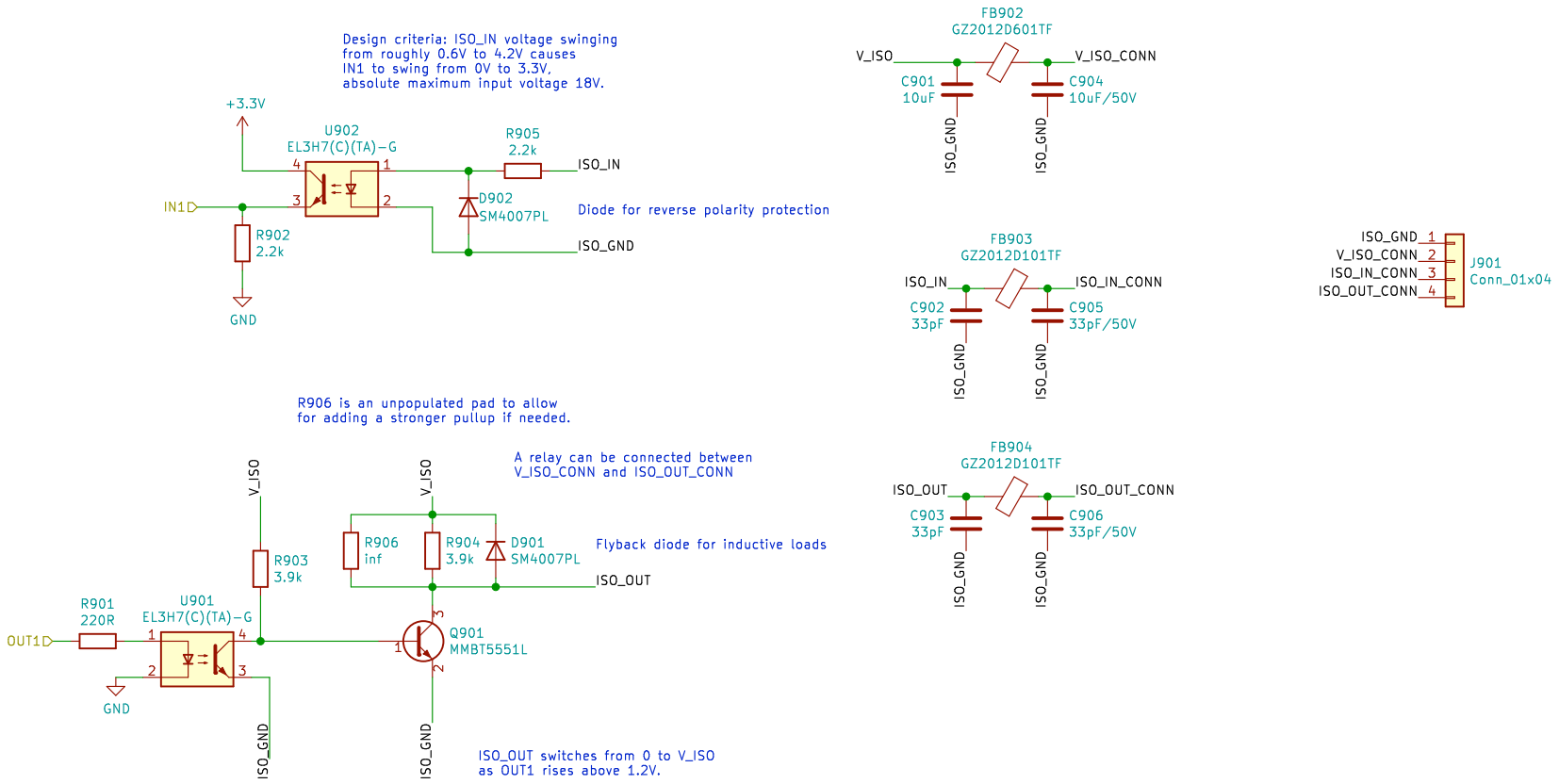

SH-ESP32 is licensed under CC BY-SA 4.0.
To view a copy of this license, visit
https://creativecommons.org/licenses/by-sa/4.0

Hat Labs Ltd

Sheet: /Optocouplers/
File: optocouplers.sch

Title: Sailor Hat with ESP32

Size: A4	Date: 2021-02-18	**Rev: 0.3.1**
KiCad E.D.A. kicad (5.1.9-0-10_14)		Id: 8/10

Mounting holes

Decoupling caps

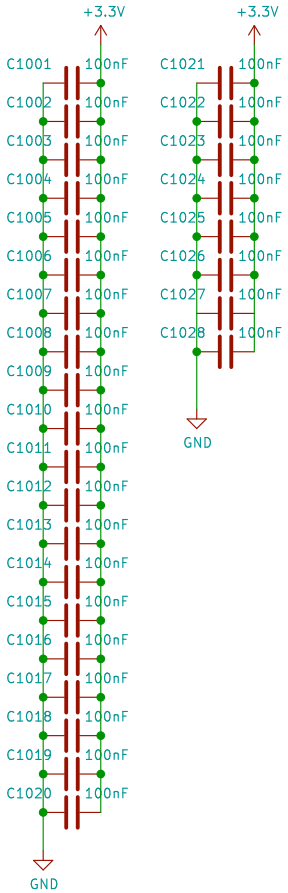

SH-ESP32 is licensed under CC BY-SA 4.0.
To view a copy of this license, visit
https://creativecommons.org/licenses/by-sa/4.0

Hat Labs Ltd

Sheet: /PCB/
File: PCB.sch

Title: Sailor Hat with ESP32

Size: A4	Date: 2021-02-18	**Rev: 0.3.1**
KiCad E.D.A. kicad (5.1.9-0-10_14)		Id: 9/10

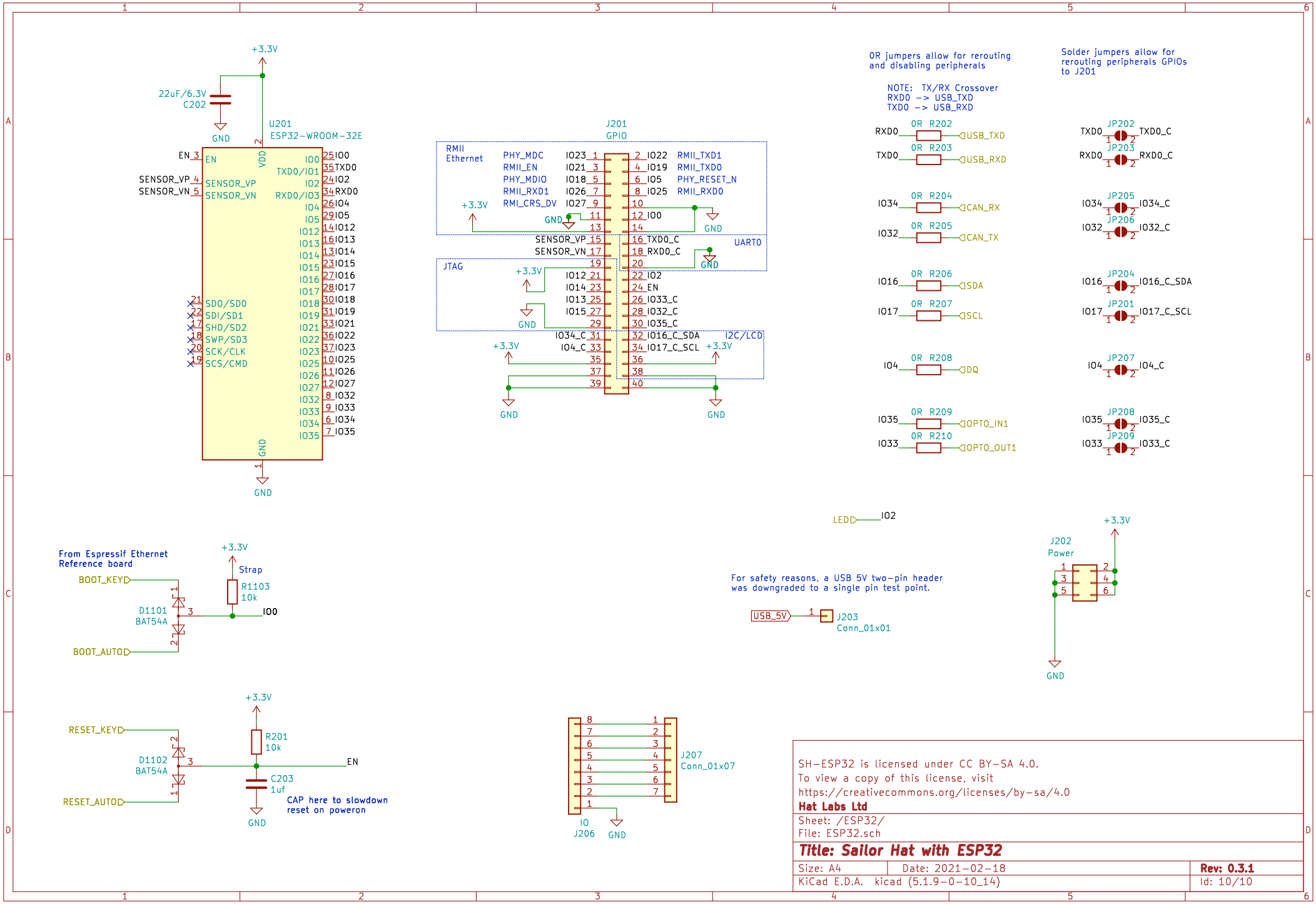

SH-ESP32 is licensed under CC BY-SA 4.0.
To view a copy of this license, visit
https://creativecommons.org/licenses/by-sa/4.0

Hat Labs Ltd

Sheet: /ESP32/
File: ESP32.sch

Title: Sailor Hat with ESP32

Size: A4	Date: 2021-02-18	**Rev: 0.3.1**
KiCad E.D.A. kicad (5.1.9-0-10_14)		Id: 10/10