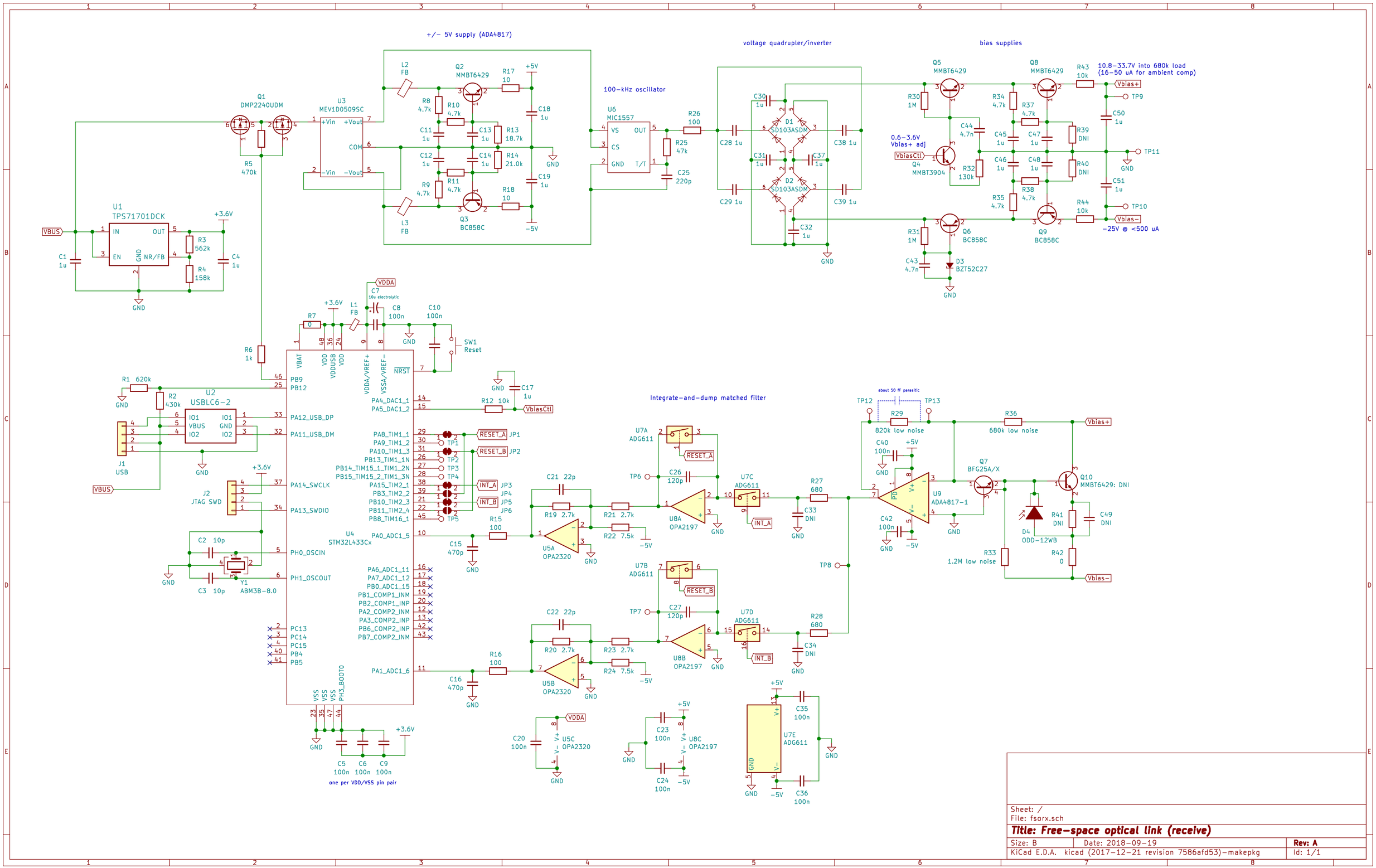
+/− 5V supply (ADA4817)
voltage quadrupler/inverter
bias supplies
100−kHz oscillator
Integrate−and−dump matched filter
10.8−33.7V into 680k load
(16−50 uA for ambient comp)
0.6−3.6V
Vbias+ adj
−25V @ <500 uA
about 50 fF parasitic
820k low noise
680k low noise
1.2M low noise
one per VDD/VSS pin pair
U1 TPS71701DCK
U2 USBLC6−2
U3 MEV1D0509SC
U4 STM32L433Cx
U6 MIC1557
U9 ADA4817−1
Q1 DMP2240UDM
Q2 MMBT6429
Q3 BC858C
Q4 MMBT3904
Q5 MMBT6429
Q6 BC858C
Q7 BFG25A/X
Q8 MMBT6429
Q9 BC858C
Q10 MMBT6429: DNI
D1 SD103ASDM
D2 SD103ASDM
D3 BZT52C27
D4 ODD−12WB
U7A ADG611
U7B ADG611
U7C ADG611
U7D ADG611
U7E ADG611
U8A OPA2197
U8B OPA2197
U8C OPA2197
U5A OPA2320
U5B OPA2320
U5C OPA2320
J1 USB
J2 JTAG SWD
Y1 ABM3B−8.0
SW1 Reset
JP1
JP2
JP3
JP4
JP5
JP6
Sheet: /
File: fsorx.sch
Title: Free−space optical link (receive)
Size: B
Date: 2018−09−19
Rev: A
KiCad E.D.A. kicad (2017−12−21 revision 7586afd53)−makepkg
Id: 1/1