TS18SCL PIO520SL IO Library

TSL18PIO520SL
Data Sheet
0.18µm TS18SCL

Tower Semiconductor
Rev 2023.03 - March 2023

PROPRIETARY NOTICES
This data sheet contains information proprietary to Tower Semiconductor Ltd. (hereunder "Tower") and may not be reproduced, recorded, or transmitted in any form without prior written consent from Tower.
Due to continuing product development, specifications, capabilities and features are subject to change without notice.

LIMITATIONS, DISCLAIMERS AND INDEMNITY
It is not authorized to use Tower processes for the manufacturing of critical components in life support devices or systems (as defined herein) without the express written permission of the Chief Executive Officer of Tower. For these purposes, "life support devices or systems" are devices or systems which (a) are intended for the surgical implant into the human body or (b) support or sustain human life, and whose failure to perform can be reasonably expected to result in a significant injury to or death of the human subject, and a "critical component" is any component of a life support device or system whose failure to perform can be reasonably expected to cause the failure of the life support device or system, or to affect its safety or effectiveness. Any Customer shall indemnify, defend and hold Tower harmless from and against any and all claims, damages, liabilities, costs and expenses incurred by Tower resulting from any claims, actions or proceedings brought against Tower arising out of any unauthorized use of GOODS in breach of this provision.

Tower Semiconductor Ltd.
Ramat Gavriel Industrial Area
P.O. Box 619
Migdal Haemek, Israel 2310502

Tel. 972-4-6506611
Fax. 972-4-6547788

Tower Semiconductor USA
2350 Mission College Blvd.
Suite 500
Santa Clara, California 95054

Tel. 408-327-8900
Fax. 408-969-9831

web: towersemi.com
e-mail: Info_General@TowerSemi.com

©Printed in Israel, March 2023

Overview

Tower Semiconductor TSL18PIO520SL is an IO library electrically and physically designed for TS18SCL process, offered with either Stack pad. This library supports 5V-Only, 5V/1.8V and 1.8V-Only, containing all necessary digital, analog, power, ground and support cells. The library is designed to meet high performance, low power, and is compliant with industry standard ESD, Latch-Up and electrical guidelines.

Features

FULL CMOS AND CIS PLATFORMS OFFERING
- 5V-Only (single gate oxide)
- 5V/1.8V (dual gate oxide)
- 1.8V-Only (single gate oxide)

FLEXIBLE POWER SUPPLY OPTIONS
- 2.7-5.5V IO and Core sides
- 2.7-5.5V IO and 1.8V±10% Core sides
- 1.8V±10% IO and Core sides

VARIOUS METALLIZATION OPTIONS
- 4, 5 & 6 metal layers with 9KÅ Aluminum Top Metal
- 4 metal layers with 28KÅ Aluminum Thick Top Metal

APPLICATION OPTIMIZED
- Integrated Over Voltage Tolerant and Power-Off Protection in all data cells
- Special supply cells supporting up to 9V and down to -5.5V

ESD COMPLIANCE
- >2KV HBM
- >200V MM

LATCH-UP IMMUNITY
- >100 mA

1 Library Offering

1.1 Frontend Options

		5V-Only	5V/1.8V	1.8V-Only
IO Side	VDDO	2.7–5.5V	2.7–5.5V	1.62–1.98V
	Gate Oxide	5V (110Å)	5V (110Å)	1.8V (40Å)
	VSSO	0V	0V	0V
Core Side	VDD	2.7–5.5V	1.62–1.98V	1.62–1.98V
	Gate Oxide	5V (110Å)	1.8V (40Å)	1.8V (40Å)
	VSS	0V	0V	0V

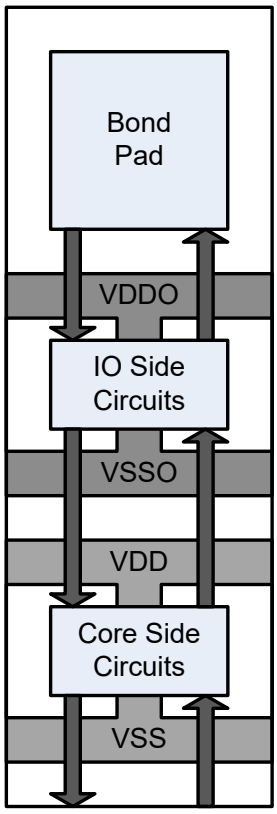

To/From IC Circuits

Notes:

- All circuits are implemented using SVt transistors.
- All circuits are placed on P-substrate.

1.2 Backend Options

	ML 0.94um Al	MT3 2.8um Al
4LM	4M1L	4M1T3
5LM	5M1L	-
6LM	6M1L	-

Notes:

- All backend options are available with stack bond pad.
- All backend options except 3M1L are available with Pad-Over-Logic (POL) bond pad.

1.3 Cell List

1.3.1 Naming Convention

Format: <Cell Name>_<IO Side>_<Core Side>_[IC Side]

Cell Name	IO Side	Core Side	IC Side
Refer to Cell Description section	50 – 5V 18 – 1.8V NA – No IO Side	50 – 5V 18 – 1.8V NA – No Core Side	50 – 5V 18 – 1.8V Blank – No IC Side

Note:

- IC Side refers to supplies for IC circuits which are not shared with IO Side and Core Side circuits.

1.3.2 Complete IO Cell List

Description	5V-Only	5V/1.8V	1.8V-Only
Digital IO Cells			
Digital IO for IO Side	PIOH_50_50	PIOH_50_18	PIOH_18_18
Digital IO for IO Side with 9V tolerance	PIOHO_50_50	PIOHO_50_18	-
Digital IO for Core Side	-	PIOL_NA_18	PIOL_NA_18
Analog IO Cells			
Analog IO for IO Side	PAH_50_NA	PAH_50_NA	PAH_18_NA
Analog IO for Core Side	-	PAL_NA_18	PAL_NA_18
Negative Supply (-5.5V)	PAN_50_NA	PAN_50_NA	-
High Voltage Supply (9V)	PVPP_50_NA	PVPP_50_NA	-
Power Cells			
Power Supply for IO Side and IC circuits	PVDA_50_NA	PVDA_50_NA	PVDA_18_NA
Power Supply for Core Side and IC circuits	PVDI_NA_50	PVDI_NA_18	PVDI_NA_18
Power Supply for IO Side, Core Side and IC	PVDF_50_50	-	PVDF_18_18
Power Supply for IC circuits only	PVDC_NA_NA_50	PVDC_NA_NA_50 PVDC_NA_NA_18	PVDC_NA_NA_18
Ground Cells			
Ground Supply for IO Side and IC circuits	PV0A_50_50	PV0A_50_18	PV0A_18_18
Ground Supply for Core Side and IC circuits	PV0I_50_50	PV0I_50_18	PV0I_18_18
Ground Supply for IO Side, Core Side and IC	PV0F_50_50	PV0F_50_18	PV0F_18_18
Ground Supply for IC circuits only	PV0C_50_50_50	PV0C_50_18_50 PV0C_50_18_18	PV0C_18_18_18

Description	5V-Only	5V/1.8V	1.8V-Only
Cut Cells			
Cut of IO Side Power Supply	PCDA_50_NA	PCDA_50_NA	PCDA_18_NA
Cut of Core Side Power Supply	PCDI_NA_50	PCDI_NA_18	PCDI_NA_18
Cut of IO Side Ground Supply	PC0A_50_NA	PC0A_50_NA	PC0A_18_NA
Cut of Core Side Ground Supply	PC0I_NA_50	PC0I_NA_18	PC0I_NA_18
Coupling (Diode) Cells			
Coupling of IO Side Power Supply	PDDA_50_NA	PDDA_50_NA	PDDA_18_NA
Coupling of Core Side Power Supply	PDDI_NA_50	PDDI_NA_18	PDDI_NA_18
Coupling of IO Side Ground Supply	PD0A_50_NA	PD0A_50_NA	PD0A_18_NA
Coupling of Core Side Ground Supply	PD0I_NA_50	PD0I_NA_18	PD0I_NA_18
Service Cells			
Power Detection for IO and Core Sides	POK_50_50	POK_50_18	POK_18_18
Filler Cells			
Filler Cell	PFILL0001_NA_NA	PFILL0001_NA_NA	PFILL0001_NA_NA
	PFILL0010_NA_NA	PFILL0010_NA_NA	PFILL0010_NA_NA
Corner Cell	PCORNER_NA_NA	PCORNER_NA_NA	PCORNER_NA_NA
	PRENROC_NA_NA	PRENROC_NA_NA	PRENROC_NA_NA

Note:

- Refer to Cell Description section for detailed description of each cell.

1.4 Metal Regime

The drawing below illustrated the top metals which can be found in all library options. Bond Pad is Stack type. It is possible to modify the bond pad size and shape.

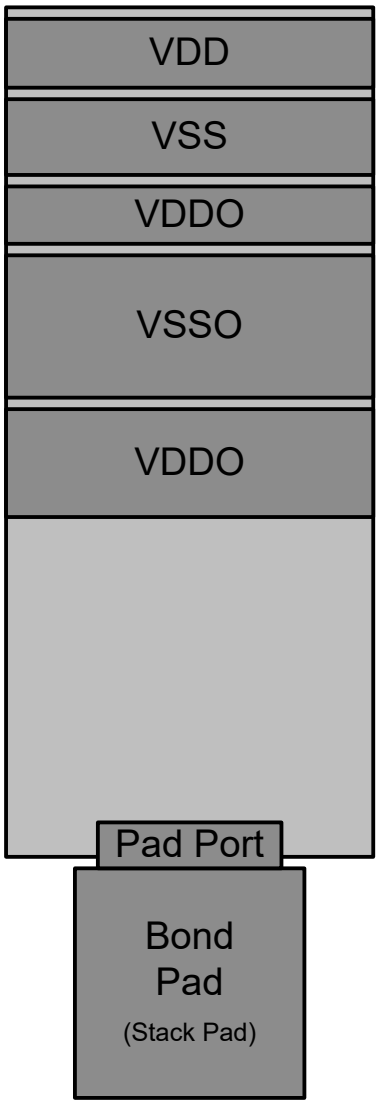

2 Global Parameters

2.1 Absolute Maximum Ratings

Symbol	Parameter	Min	Max	Unit
$VDDO_{5V}$	IO Side Supply Voltage, 5V	-0.5	6.5	V
$VDDO_{1.8V}$	IO Side Supply Voltage, 1.8V	-0.5	2.2	V
VDD_{5V}	Core Side Supply Voltage, 5V	-0.5	6.5	V
$VDD_{1.8V}$	Core Side Supply Voltage, 1.8V	-0.5	2.2	V
VIN_{5V}	Input Voltage, 5V	-0.5	6.5	V
$VIN_{1.8V}$	Input Voltage, 1.8V	-0.5	2.2	V
VIN_{OVT}	Input Voltage, OVT	-0.5	9.5	V
VIN_{NEG}	Input Voltage, Negative	-5.5	0.5	V
T_{STO}	Storage Temperature	-65	150	°C

2.2 Recommended Operating Conditions

Symbol	Parameter	Min	Max	Unit
$VDDO_{5V}$	IO Side Supply Voltage, 5V	2.7	5.5	V
$VDDO_{1.8V}$	IO Side Supply Voltage, 1.8V	1.62	1.98	V
VDD_{5V}	Core Side Supply Voltage, 5V	2.7	5.5	V
$VDD_{1.8V}$	Core Side Supply Voltage, 1.8V	1.62	1.98	V
VIN_{5V}	Input Voltage, 5V	0	5.5	V
$VIN_{1.8V}$	Input Voltage, 1.8V	0	2.2	V
VIN_{OVT}	Input Voltage, OVT	0	9	V
VIN_{NEG}	Input Voltage, Negative	-5.5	0	V
T_A	Operating Temperature	-40	150	°C

Note:

- Refer to Implementation Considerations section for supplies and input voltages dependencies.

2.3 ESD and Latch-Up Characteristics

Symbol	Parameter	Typ	Max	Unit
V_{HBM}	Human Body Model (HBM) discharge	2K	4K	V
V_{MM}	Machine Model (MM) discharge	200	250	V
$I_{LATCHUP}$	I-test and overvoltage Latch-Up testing	100	200	mA

Note:

- Refer to Implementation Considerations section for ESD and Latch-Up considerations.

2.4 DC Characteristics

2.4.1 PIOH_18_18

Symbol	Parameter	$VDDO_{1.8V}$	Condition	Min	Typ	Max	Unit
V_{IH}	Input High	1.8V±10%	TTL_ON='0'	$0.7\times VDDO_{1.8V}$		1.98	V
V_{IL}	Input Low	1.8V±10%		-0.3		$0.3\times VDDO_{1.8V}$	V
V_{HYST}	Hysteresis	1.8V±10%	TTL_ON='0' & SCHM_ON='1'	$0.1\times VDDO_{1.8V}$		$0.2\times VDDO_{1.8V}$	V
V_{OH}	Output High	1.8V±10%	DRIVE_STR='0' & $I_O\leq 8mA$ / DRIVE_STR='1' & $I_O\leq 16mA$	$0.85\times VDDO_{1.8V}$			V
V_{OL}	Output Low	1.8V±10%				$0.15\times VDDO_{1.8V}$	V
V_{OH}	Output High	1.8V±10%	DRIVE_STR='0' & $8mA<I_O\leq 16mA$	$0.7\times VDDO_{1.8V}$			V
V_{OL}	Output Low	1.8V±10%				$0.3\times VDDO_{1.8V}$	V
R_{PULL}	Pull-up/pull-down resistor	1.8V±10%	PULL_ON='1'	40K		70K	Ω

2.4.2 PIOH_50_50, PIOH_50_18

Symbol	Parameter	$VDDO_{5V}$	Condition	Min	Typ	Max	Unit
V_{IH}	Input High	2.7-5.5V	TTL_ON='0'	$0.7\times VDDO_{5V}$		5.5	V
V_{IL}	Input Low	2.7-5.5V		-0.3		$0.3\times VDDO_{5V}$	V
V_{HYST}	Hysteresis	2.7-5.5V	TTL_ON='0' & SCHM_ON='1'	$0.1\times VDDO_{5V}$		$0.2\times VDDO_{5V}$	V
V_{IH}	Input High	2.7-5.5V	TTL_ON='1'	2		5.5	V
V_{IL}	Input Low	2.7-5.5V		-0.3		0.8	V
V_{HYST}	Hysteresis	2.7-5.5V	TTL_ON='1' & SCHM_ON='1'	0.15		0.3	V
V_{OH}	Output High	2.7-5.5V	DRIVE_STR='0' & $I_O\leq 8mA$ / DRIVE_STR='1' & $I_O\leq 16mA$	$0.9\times VDDO_{5V}$			V
V_{OL}	Output Low	2.7-5.5V				$0.1\times VDDO_{5V}$	V
V_{OH}	Output High	2.7-5.5V	DRIVE_STR='0' & $8mA<I_O\leq 16mA$	$0.8\times VDDO_{5V}$			V
V_{OL}	Output Low	2.7-5.5V				$0.2\times VDDO_{5V}$	V
R_{PULL}	Pull-up/pull-down resistor	2.7-5.5V	PULL_ON='1'	60K		500K	Ω

2.4.3 PIOHO_50_50, PIOHO_50_18

Symbol	Parameter	$VDDO_{5V}$	Condition	Min	Typ	Max	Unit
V_{IH}	Input High	2.7-5.5V	TTL_ON='0'	$0.7\times VDDO_{5V}$		9	V
V_{IL}	Input Low	2.7-5.5V		-0.3		$0.3\times VDDO_{5V}$	V
V_{HYST}	Hysteresis	2.7-5.5V	TTL_ON='0' & SCHM_ON='1'	$0.1\times VDDO_{5V}$		$0.2\times VDDO_{5V}$	V
V_{IH}	Input High	2.7-5.5V	TTL_ON='1'	2		9	V
V_{IL}	Input Low	2.7-5.5V		-0.3		0.8	V
V_{HYST}	Hysteresis	2.7-5.5V	TTL_ON='1' & SCHM_ON='1'	0.15		0.3	V
V_{OH}	Output High	5V±10%	DRIVE_STR='0' & $I_O\leq 8mA$ / DRIVE_STR='1' & $I_O\leq 16mA$	$0.9\times VDDO_{5V}$			V
V_{OL}	Output Low	5V±10%				$0.1\times VDDO_{5V}$	V
V_{OH}	Output High	5V±10%	DRIVE_STR='0' & $8mA<I_O\leq 16mA$	$0.8\times VDDO_{5V}$			V
V_{OL}	Output Low	5V±10%				$0.2\times VDDO_{5V}$	V
R_{PULL}	Pull-up/pull-down resistor	5V±10%	PULL_ON='1'	60K		500K	Ω

2.4.4 PIOL_NA_18

Symbol	Parameter	$VDD_{1.8V}$	Condition	Min	Typ	Max	Unit
V_{IH}	Input High	1.8V±10%		$0.7\times VDD_{1.8V}$		1.98	V
V_{IL}	Input Low	1.8V±10%		-0.3		$0.3\times VDD_{1.8V}$	V
V_{HYST}	Hysteresis	1.8V±10%	SCHM_ON='1'	$0.15\times VDD_{1.8V}$		$0.2\times VDD_{1.8V}$	V
V_{OH}	Output High	1.8V±10%	DRIVE_STR='0' & $I_O\leq 8mA$ / DRIVE_STR='1' & $I_O\leq 16mA$	$0.85\times VDD_{1.8V}$			V
V_{OL}	Output Low	1.8V±10%				$0.15\times VDD_{1.8V}$	V
V_{OH}	Output High	1.8V±10%	DRIVE_STR='0' & $8mA<I_O\leq 16mA$	$0.7\times VDD_{1.8V}$			V
V_{OL}	Output Low	1.8V±10%				$0.3\times VDD_{1.8V}$	V
R_{PULL}	Pull-up/pull-down resistor	1.8V±10%	PULL_ON='1'	40K		70K	Ω

3 Cell Description

3.1 Digital IO Cells

3.1.1 PIOH

CELL DESCRIPTION

PIOH is input/output data cell, with pull-up/down resistor, drive strength selector, Schmidt-trigger option, TTL/CMOS input levels and built-in ESD protection. The IO cell supports over-voltage tolerance up to VDDO level.

FUNCTIONAL SCHEME

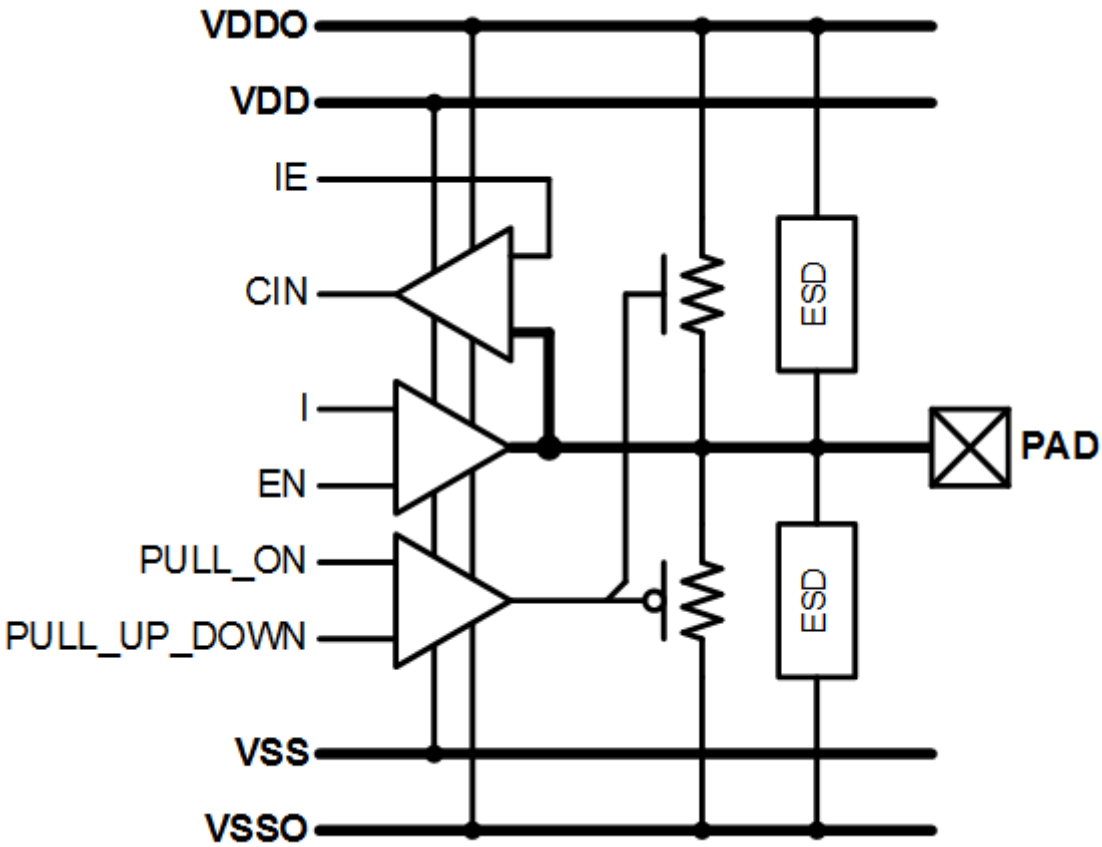

PIN DESCRIPTION

Pin	Type	'0'	'1'	Description
PAD	Digital Input	0V[a]	VDDO[a,b]	Bond pad
	Digital Output	0V[a]	VDDO[a]	
CIN	Digital Output	0V	VDD	Data in from PAD
I	Digital Input	0V	VDD	Data out to PAD
EN	Digital Control	0V	VDD	Output enable
IE	Digital Control	0V	VDD	Input enable
PULL_UP_DOWN	Digital Input	0V	VDD	Pull-up/pull-down resistor data
PULL_ON	Digital Control	0V	VDD	Pull-up/pull-down resistor enable
SCHM_ON	Configuration	0V	VDD	Schmidt-trigger: '1' – Enable / '0' – Disable
DRIVE_STR	Configuration	0V	VDD	Drive strength: '1' – 16mA / '0' – 8mA
TTL_ON	Configuration	0V	VDDO	Input levels: '1' – TTL / '0' – CMOS
VDD_OK	Supervision[c]	0V	VDD	'1' – Enable / '0' – Disable
VDDO_OK	Supervision[c]	0V	VDDO	'1' – Enable / '0' – Disable

Notes:

a. Refer to Global Parameters section for exact supported voltage levels.

b. Refer to Implementation Considerations section for supplies and input voltages dependencies.

c. VDD_OK is meant to set CIN to '0' in the absence of VDD. VDDO_OK is meant to set PAD to High-Z in the absence of VDDO. Complementary supply sensing circuit for these features is available in POK cell. If such features are not required, then these inputs must be tied to the associated supplies.

FUNCTIONAL DESCRIPTION

Output Drive				
Inputs				Output
EN	**I**	**PULL_ON**	**PULL_UP_DOWN**	**PAD**
0	X	0	X	High-Z
0	X	1	0	Weak-0
0	X	1	1	Weak-1
1	0	0	X	0
1	1	0	X	1

Input Drive			
Inputs			Output
EN	**IE**	**PAD**	**CIN**
0	1	0	0
0	1	1	1
X	0	X	0

Note:

- Other combinations of Output Drive may cause excessive power consumption and will not meet the DC Characteristics.

3.1.2 PIOHO

CELL DESCRIPTION

PIOHO is input/output data cell, with pull-up/down resistor, drive strength selector, Schmidt-trigger option, TTL/CMOS input levels and built-in ESD protection. The IO cell supports over-voltage tolerance up to 9V.

FUNCTIONAL SCHEME

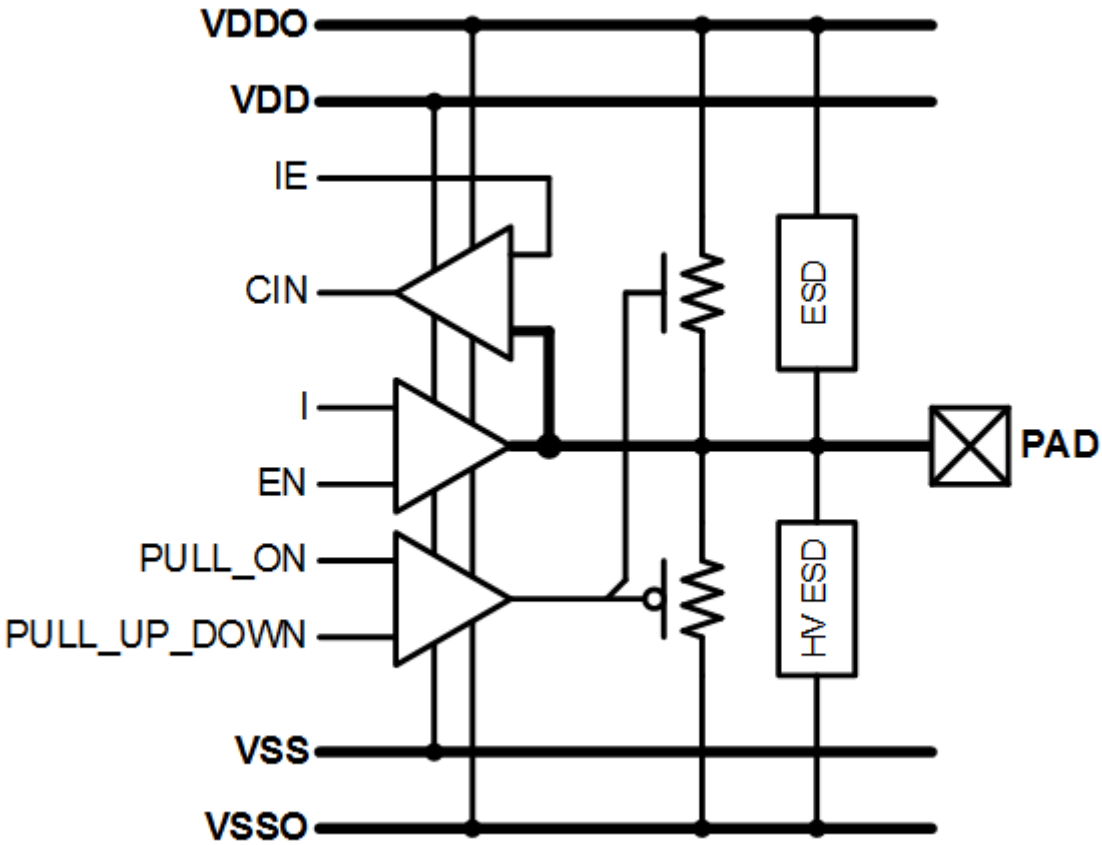

PIN DESCRIPTION

Pin	Type	'0'	'1'	Description
PAD	Digital Input	0V[a]	VDDO[a,b]	Bond pad
	Digital Output	0V[a]	VDDO[a]	
CIN	Digital Output	0V	VDD	Data in from PAD
I	Digital Input	0V	VDD	Data out to PAD
EN	Digital Control	0V	VDD	Output enable
IE	Digital Control	0V	VDD	Input enable
PULL_UP_DOWN	Digital Input	0V	VDD	Pull-up/pull-down resistor data
PULL_ON	Digital Control	0V	VDD	Pull-up/pull-down resistor enable
SCHM_ON	Configuration	0V	VDD	Schmidt-trigger: '1' – Enable / '0' – Disable
DRIVE_STR	Configuration	0V	VDD	Drive strength: '1' – 16mA / '0' – 8mA
TTL_ON	Configuration	0V	VDDO	Input levels: '1' – TTL / '0' – CMOS
VDD_OK	Supervision[c]	0V	VDD	'1' – Enable / '0' – Disable
VDDO_OK	Supervision[c]	0V	VDDO	'1' – Enable / '0' – Disable

Notes:

a. Refer to Global Parameters section for exact supported voltage levels.

b. PAD input is recognized as '1' for voltages above VDDO up to 9V. Refer to Implementation Considerations section for supplies and input voltages dependencies.

c. VDD_OK is meant to set CIN to '0' in the absence of VDD. VDDO_OK is meant to set PAD to High-Z in the absence of VDDO. Complementary supply sensing circuit for these features is available in POK cell. If such features are not required, then these inputs must be tied to the associated supplies.

FUNCTIONAL DESCRIPTION

Output Drive				
Inputs				Output
EN	**I**	**PULL_ON**	**PULL_UP_DOWN**	**PAD**
0	X	0	X	High-Z
0	X	1	0	Weak-0
0	X	1	1	Weak-1
1	0	0	X	0
1	1	0	X	1

Input Drive			
Inputs			Output
EN	**IE**	**PAD**	**CIN**
0	1	0	0
0	1	1	1
X	0	X	0

Note:

- Other combinations of Output Drive may cause excessive power consumption and will not meet the DC Characteristics.

3.1.3 PIOL

CELL DESCRIPTION

PIOL is input/output data cell, with pull-up/down resistor, drive strength selector, Schmidt-trigger option, TTL/CMOS input levels and built-in ESD protection. The cell supports over-voltage tolerance up to VDD level.

FUNCTIONAL SCHEME

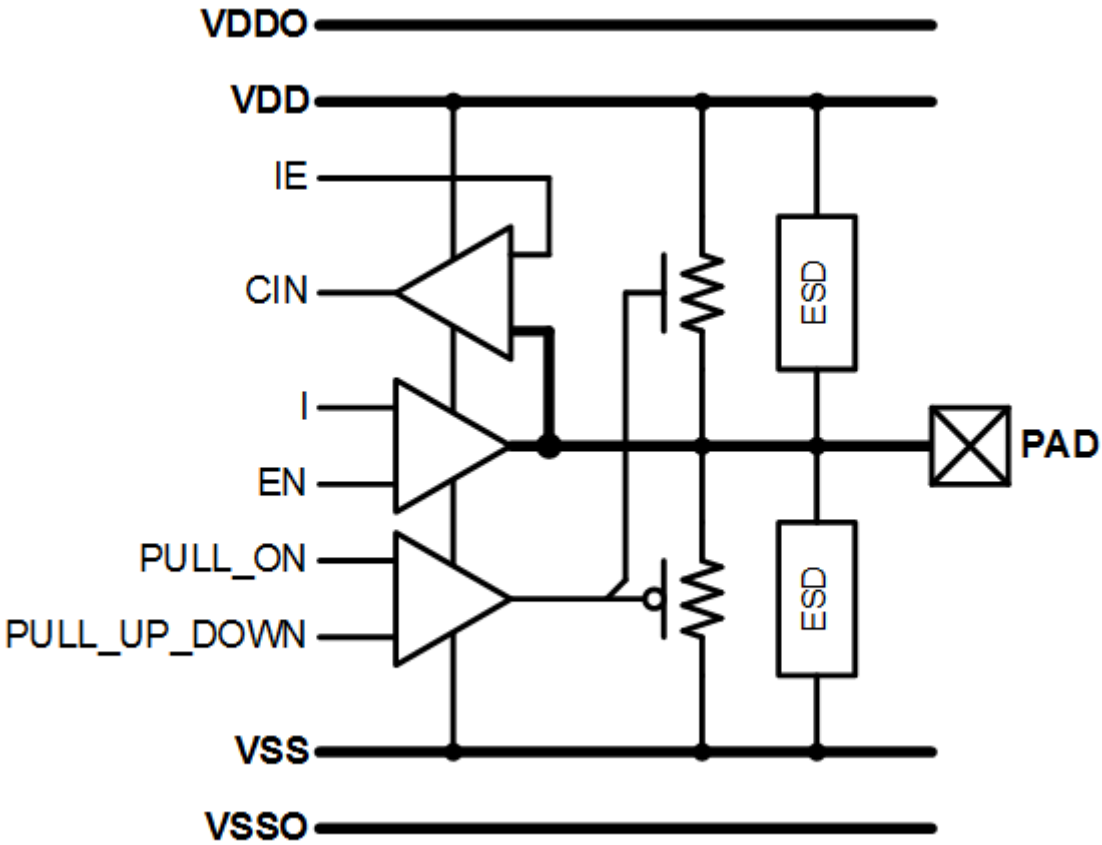

PIN DESCRIPTION

Pin	Type	'0'	'1'	Description
PAD	Digital Input	0V[a]	VDD[a,b]	Bond pad
	Digital Output	0V[a]	VDD[a]	
CIN	Digital Output	0V	VDD	Data in from PAD
I	Digital Input	0V	VDD	Data out to PAD
EN	Digital Control	0V	VDD	Output enable
IE	Digital Control	0V	VDD	Input enable
PULL_UP_DOWN	Digital Input	0V	VDD	Pull-up/pull-down resistor data
PULL_ON	Digital Control	0V	VDD	Pull-up/pull-down resistor enable
SCHM_ON	Configuration	0V	VDD	Schmidt-trigger: '1' – Enable / '0' – Disable
DRIVE_STR	Configuration	0V	VDD	Drive strength: '1' – 16mA / '0' – 8mA

Note:

a. Refer to Global Parameters section for exact supported voltage levels.

b. Refer to Implementation Considerations section for supplies and input voltages dependencies.

FUNCTIONAL DESCRIPTION

Output Drive				
Inputs				Output
EN	**I**	**PULL_ON**	**PULL_UP_DOWN**	**PAD**
0	X	0	X	High-Z
0	X	1	0	Weak-0
0	X	1	1	Weak-1
1	0	0	X	0
1	1	0	X	1

Input Drive			
Inputs			Output
EN	**IE**	**PAD**	**CIN**
0	1	0	0
0	1	1	1
X	0	X	0

Note:

- Other combinations of Output Drive may cause excessive power consumption and will not meet the DC Characteristics.

3.2 Analog IO Cells

3.2.1 PAH

CELL DESCRIPTION

PAH is analog data cell, with built-in ESD protection. The cell supports over-voltage tolerance up to VDDO level.

FUNCTIONAL SCHEME

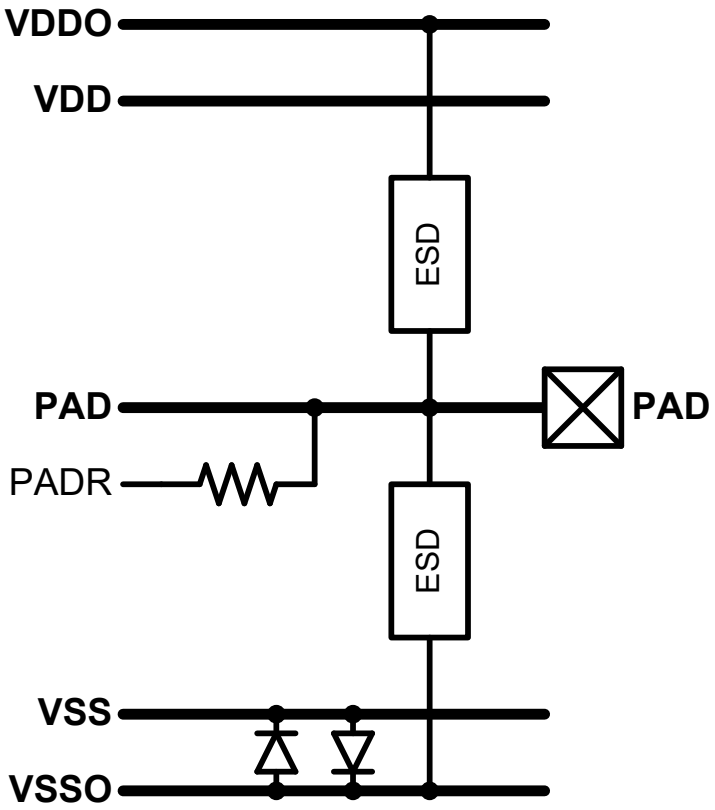

PIN DESCRIPTION

Pin	Type	Voltage	Description
PAD	Analog Input	0V–VDDO	Bond pad, suitable for transistors drains[a]
	Analog Output	0V–VDDO	
PADR[b]	Analog Output	0V–VDDO	Suitable for transistors gates

Notes:

a. Transistors connected to PAD pin may be subject to ESD design rules.

b. PADR is connected to PAD through secondary ESD resistor.

3.2.2 PAL

CELL DESCRIPTION

PAL is analog data cell, with built-in ESD protection. The cell supports over-voltage tolerance up to VDD level.

FUNCTIONAL SCHEME

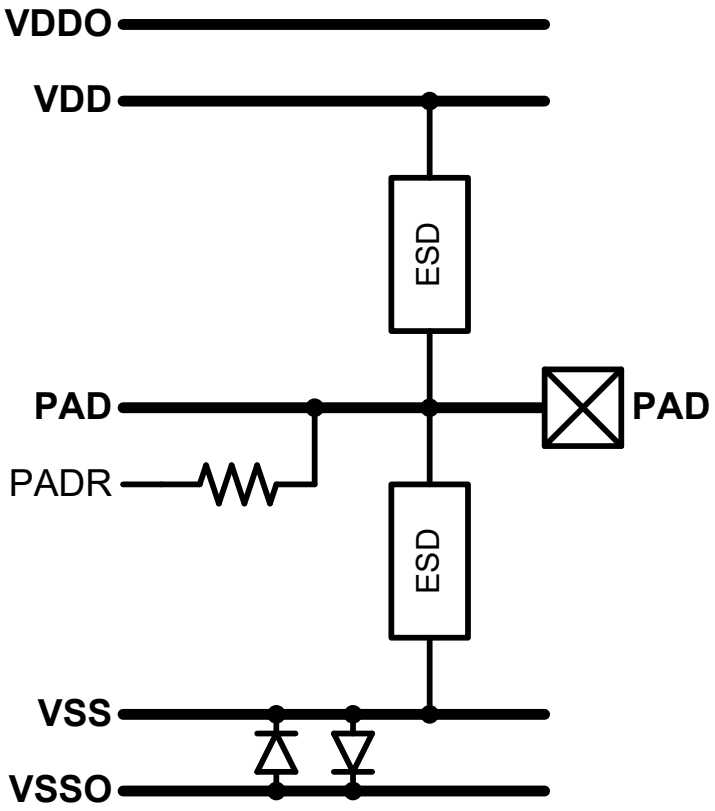

PIN DESCRIPTION

Pin	Type	Voltage	Description
PAD	Analog Input	0V–VDD	Bond pad, suitable for transistors drains[a]
	Analog Output	0V–VDD	
PADR[b]	Analog Output	0V–VDD	Suitable for transistors gates

Notes:

a. Transistors connected to PAD pin may be subject to ESD design rules.

b. PADR is connected to PAD through secondary ESD resistor.

3.2.3 PAN

CELL DESCRIPTION

PAN is analog data / supply cell for negative voltages, with built-in ESD protection. The cell supports negative voltages down to -5.5V.

FUNCTIONAL SCHEME

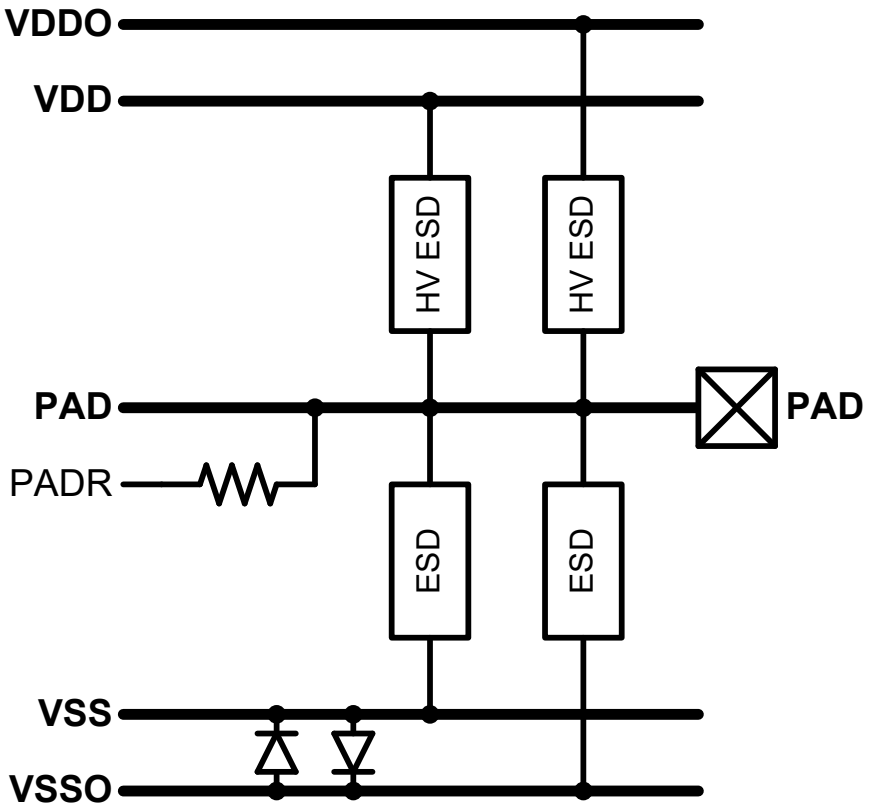

PIN DESCRIPTION

Pin	Type	Voltage	Description
PAD	Analog Input	-5.5–0V	Bond pad, suitable for transistors drains[a]
	Analog Output	-5.5–0V	
PADR[b]	Analog Output	-5.5–0V	Suitable for transistors gates

Notes:

a. Transistors connected to PAD pin may be subject to ESD design rules.

b. PADR is connected to PAD through secondary ESD resistor.

3.2.4 PVPP

CELL DESCRIPTION

PVPP is analog data / supply cell for high voltages, with built-in ESD protection. The cell supports high voltages up to 9V.

FUNCTIONAL SCHEME

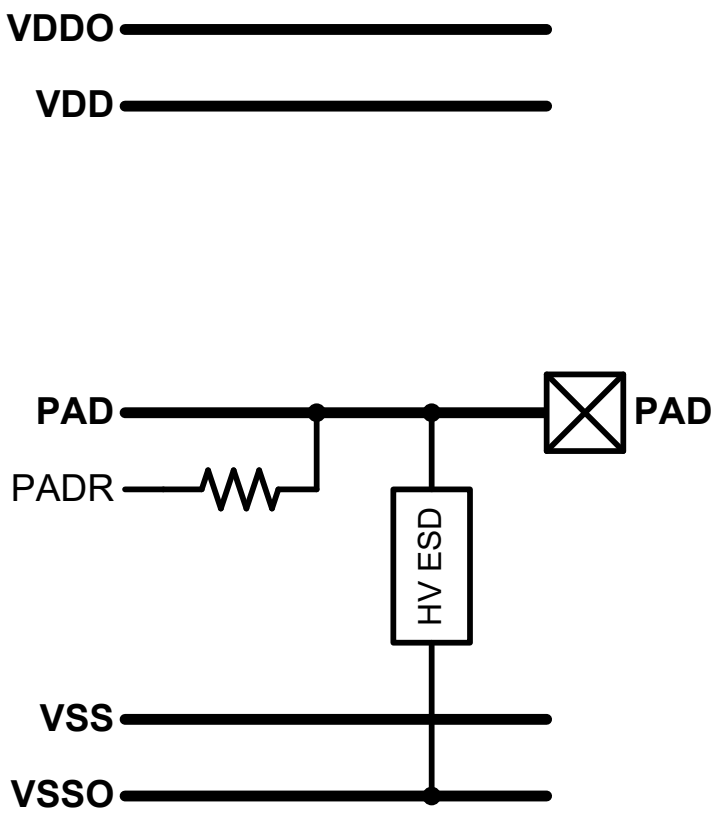

PIN DESCRIPTION

Pin	Type	Voltage	Description
PAD	Analog Input	0–9V	Bond pad, suitable for transistors drains[a]
	Analog Output	0–9V	
PADR[b]	Analog Output	0–9V	Suitable for transistors gates

Notes:

a. Transistors connected to PAD pin may be subject to ESD design rules.

b. PADR is connected to PAD through secondary ESD resistor.

3.3 Power Cells

3.3.1 PVDA

CELL DESCRIPTION

PVDA provides power to the IO side of the IO cells and can also be used to provide the same power to the IC circuits.

FUNCTIONAL SCHEME

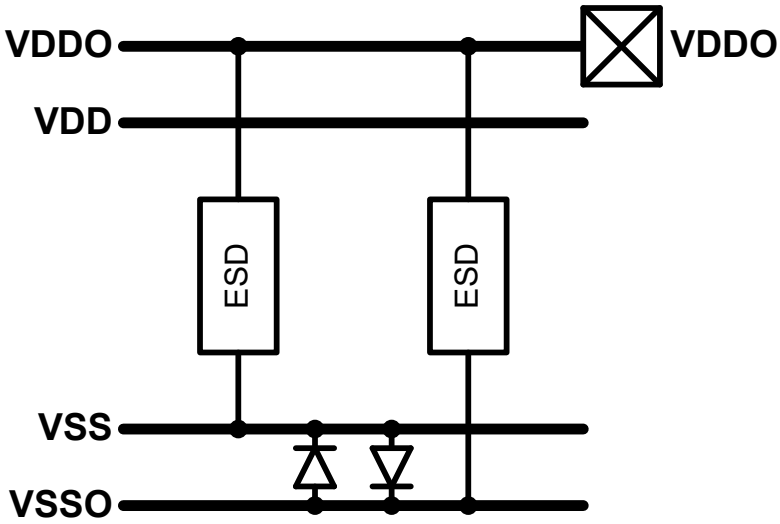

3.3.2 PVDI

CELL DESCRIPTION

PVDI provides power to the Core side of the IO cells and can also be used to provide the same power to the IC circuits.

FUNCTIONAL SCHEME

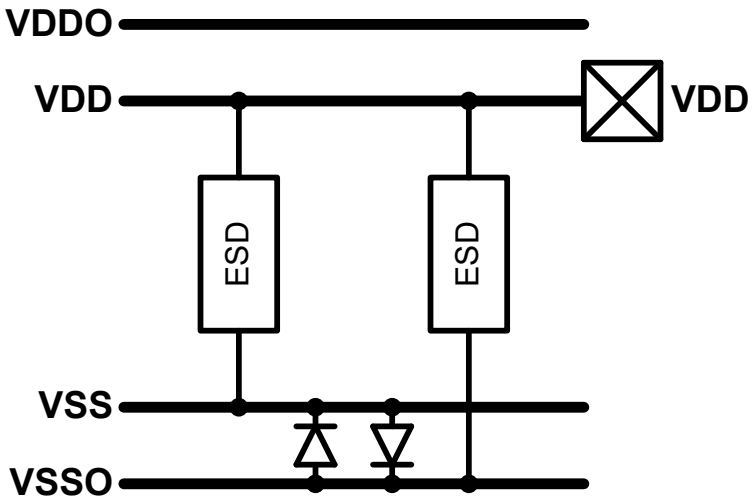

3.3.3 PVDF

CELL DESCRIPTION

PVDF provides power to both IO and Core sides of the IO cells, thus saving the need to use two separate cells, in cases where IO and core sides are supplied by the same voltage. It can also provide the same power to the IC circuits.

FUNCTIONAL SCHEME

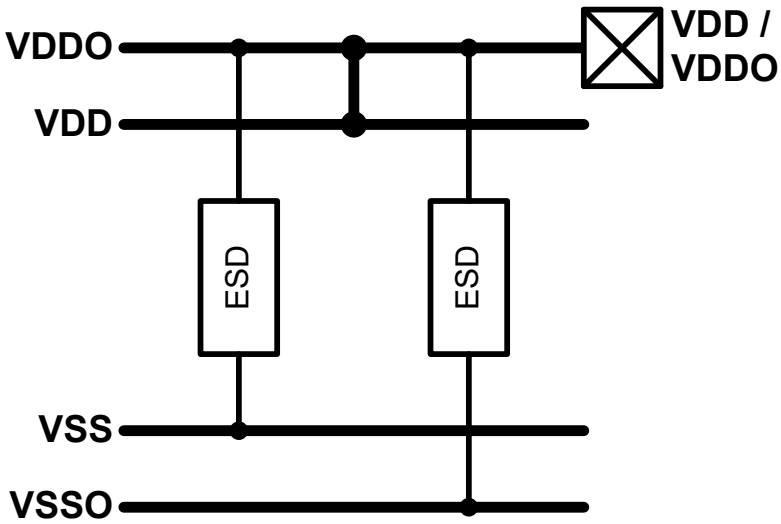

3.3.4 PVDC

CELL DESCRIPTION

PVDC provides power to the IC circuits directly without the IO circuits involvements, for better noise immunity.

FUNCTIONAL SCHEME

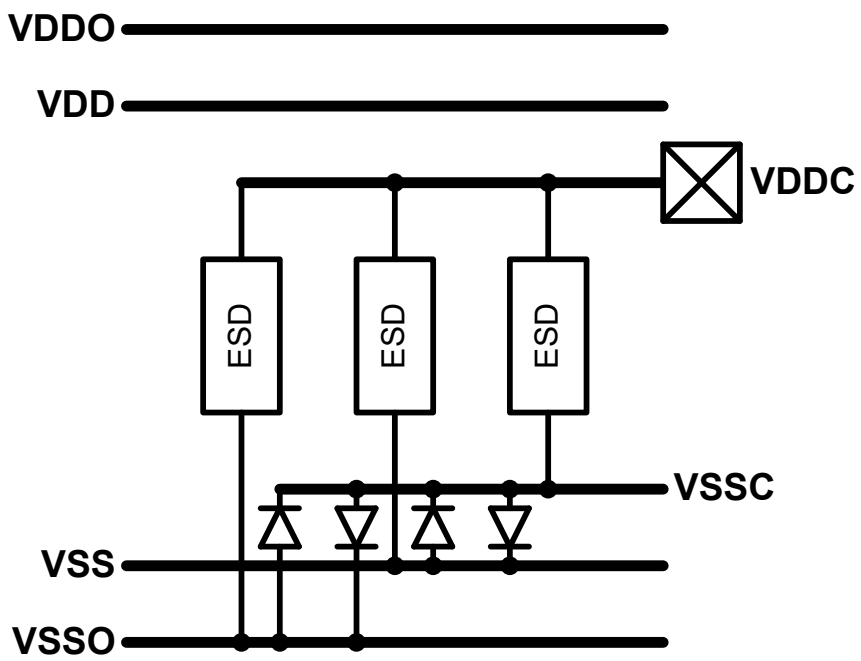

Notes:

- VDDC and VSSC are not IO rail supplies.
- VSSC is a complementary pin for enhanced ESD performance. Refer to Implementation Considerations section.

3.4 Ground Cells

3.4.1 PV0A

CELL DESCRIPTION

PV0A provides ground to the IO side of the IO cells and can also be used to provide the same ground to the IC circuits.

FUNCTIONAL SCHEME

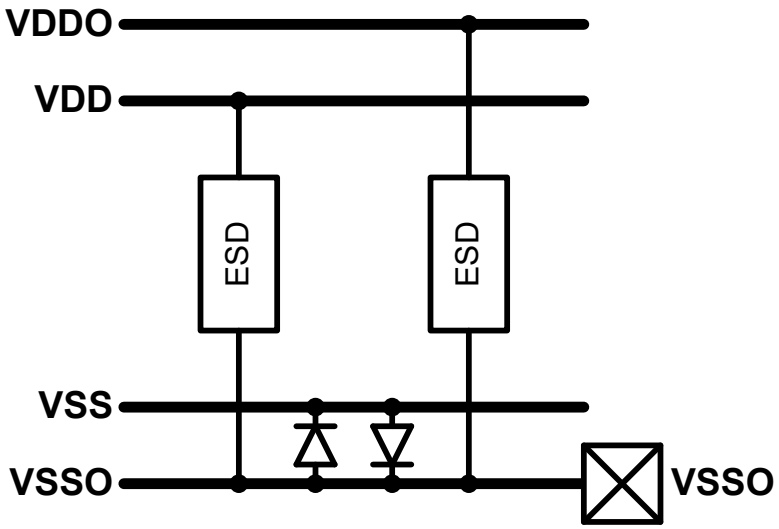

3.4.2 PV0I

CELL DESCRIPTION

PV0I provides ground to the Core side of the IO cells and can also be used to provide the same ground to the IC circuits.

FUNCTIONAL SCHEME

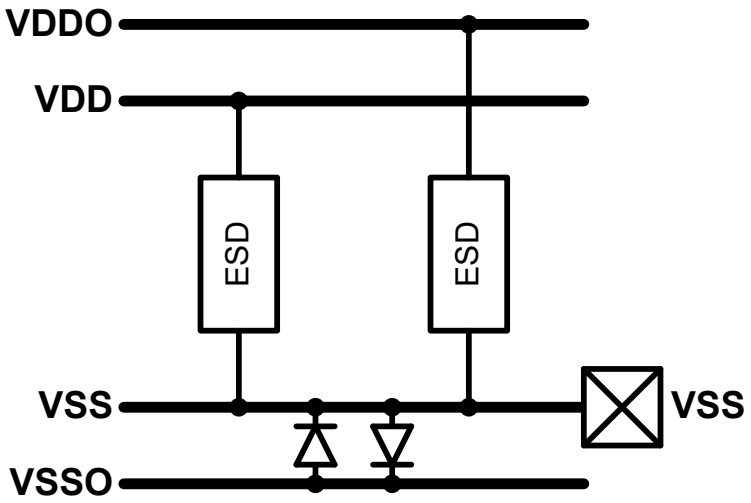

3.4.3 PV0F

CELL DESCRIPTION

PV0F provides ground to both IO and Core sides of the IO cells, thus saving the need to use two separate cells. It can also provide the same ground to the IC circuits.

FUNCTIONAL SCHEME

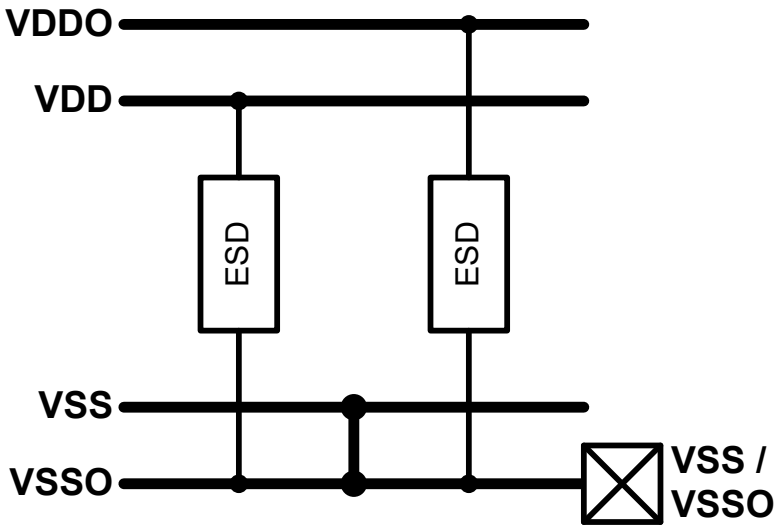

3.4.4 PV0C

CELL DESCRIPTION

PV0C provides ground to the IC circuits directly without the IO circuits involvements, for better noise immunity.

FUNCTIONAL SCHEME

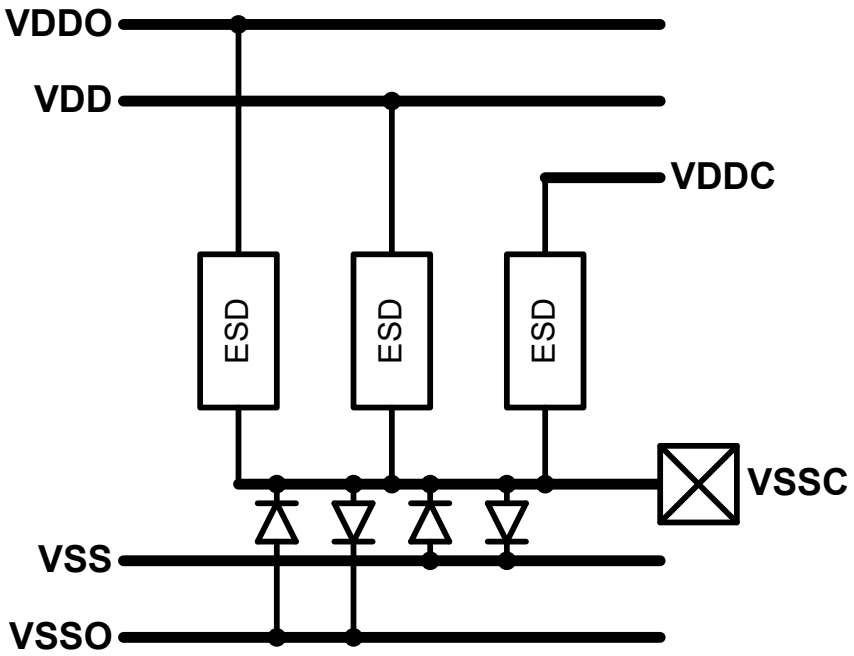

Notes:

- VSSC and VDDC are not IO rail supplies.
- VDDC is a complementary pin for enhanced ESD performance. Refer to Implementation Considerations section.

3.5 Cut Cells

3.5.1 PCDA

CELL DESCRIPTION

PCDA cuts IO side power supply rail.

FUNCTIONAL SCHEME

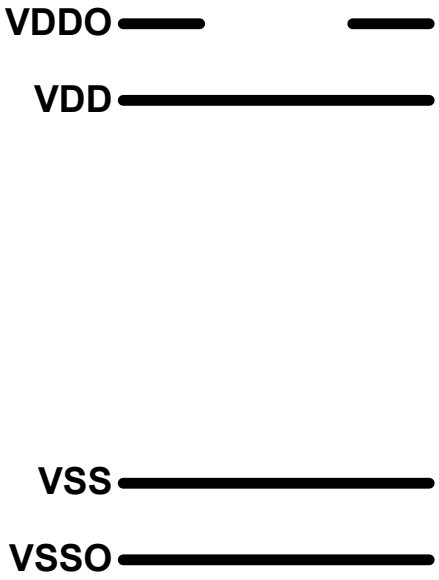

3.5.2 PCDI

CELL DESCRIPTION

PCDI cuts Core side power supply rail.

FUNCTIONAL SCHEME

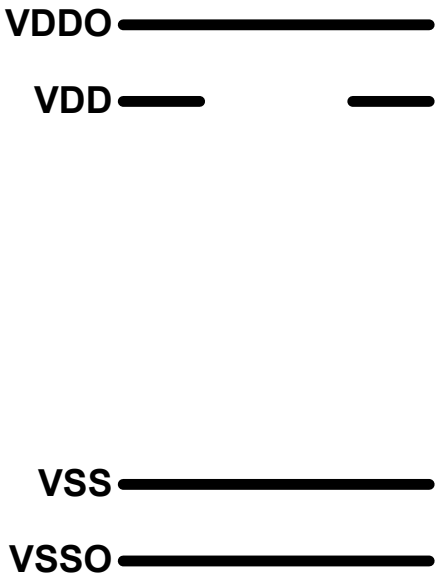

3.5.3 PC0A

CELL DESCRIPTION

PC0A cuts IO side ground supply rail.

FUNCTIONAL SCHEME

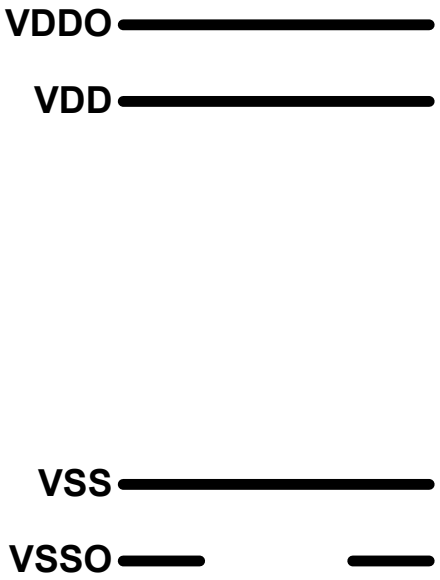

3.5.4 PC0I

CELL DESCRIPTION

PC0I cuts Core side ground supply rail.

FUNCTIONAL SCHEME

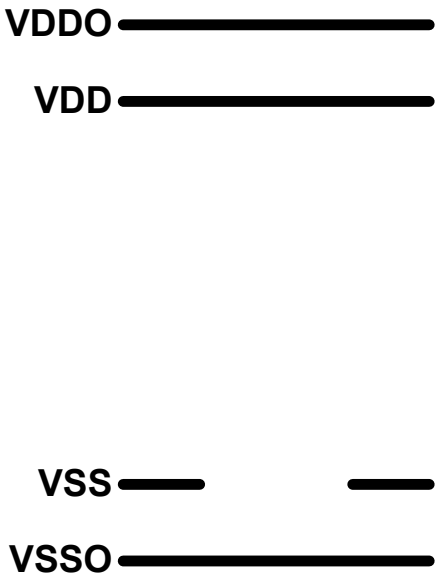

3.6 Coupling (Diode) Cells

3.6.1 PDDA

CELL DESCRIPTION

PDDA couples IO side power supply rail using back-to-back diodes.

FUNCTIONAL SCHEME

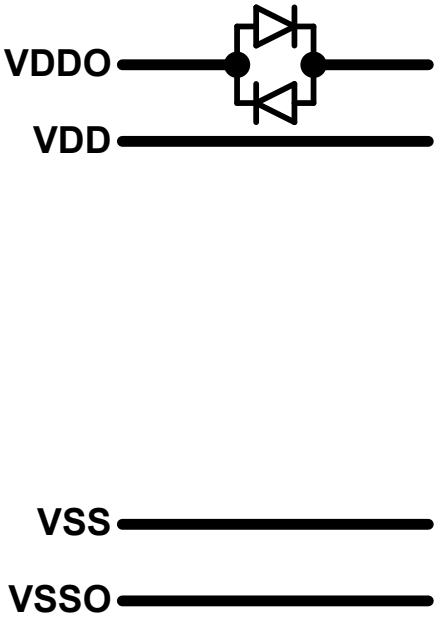

3.6.2 PDDI

CELL DESCRIPTION

PDDI couples Core side power supply rail using back-to-back diodes.

FUNCTIONAL SCHEME

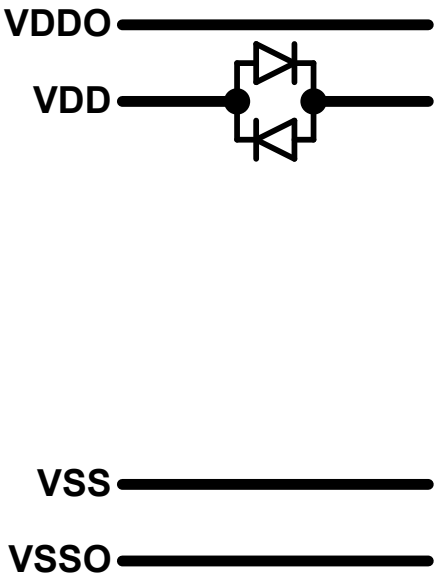

3.6.3 PD0A

CELL DESCRIPTION

PD0A couples IO side ground supply rail using back-to-back diodes.

FUNCTIONAL SCHEME

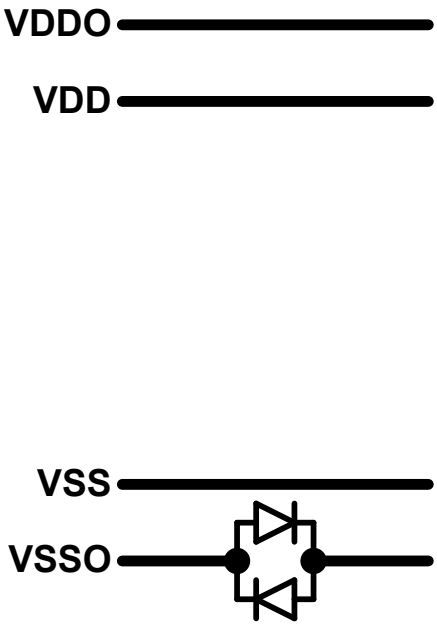

3.6.4 PD0I

CELL DESCRIPTION

PD0I couples Core side ground supply rail using back-to-back diodes.

FUNCTIONAL SCHEME

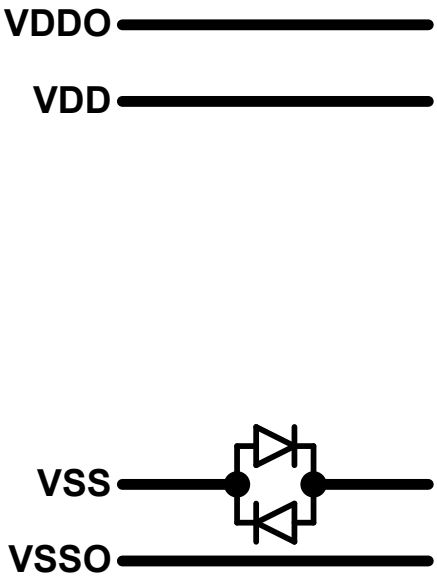

3.7 Service Cells

3.7.1 POK

CELL DESCRIPTION

POK is a complementary supply sensing circuit which detects active power supply for IO and Core sides. It is meant to set PAD to High-Z in supporting cells in the absence of either VDD or VDDO.

FUNCTIONAL SCHEME

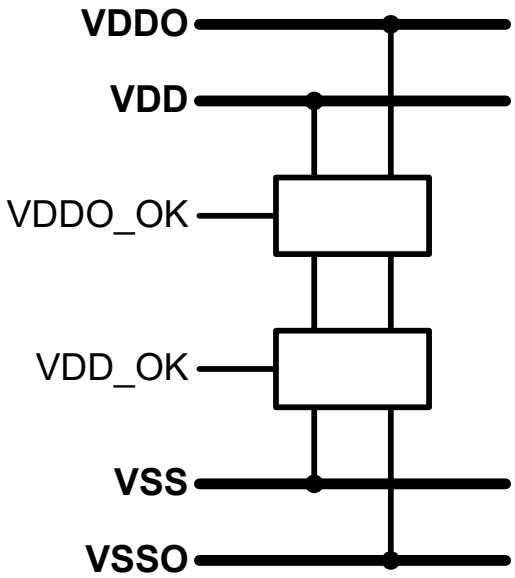

PIN DESCRIPTION

Pin	Type	'0'	'1'	Description
VDD_OK	Digital Output	0V	VDD	'1' – Enable / '0' – Disable
VDDO_OK	Digital Output	0V	VDDO	'1' – Enable / '0' – Disable

4 Backend Properties

4.1 Maximum Current To/From the Bond Pad

4.1.1 TS18SL

	Temperature				
Cells	**85C**	**105C**	**125C**	**150C**	**Units**
PIOH, PIOHO, PIOL	100	48	25	12	mA
PAH, PAL, PAN, PVPP	50	24	12	6	mA
PVDA, PV0A	50	24	12	6	mA
PVDI, PV0I	50	24	12	6	mA
PVDC, PV0C	50	24	12	6	mA
PVDF, PV0F	75	36	19	9	mA

Note:

- Based on the library topology and data taken from DR2 0018 SL, section "Metal Lines max DC currents".

4.2 Maximum Current Through IO Rails

4.2.1 TS18SL

	Temperature								
	VDD, VSS				VDDO, VSSO				
Backend	**85C**	**105C**	**125C**	**150C**	**85C**	**105C**	**125C**	**150C**	**Units**
4M1T3	280	130	72	34	520	250	120	64	mA
4M1L	100	52	27	12	190	97	49	24	mA
5M1L	140	71	37	16	260	130	67	33	mA
6M1L	180	90	47	20	330	160	85	42	mA

Note:

- Based on the library topology and data taken from DR2 0018 SL, section "Metal Lines max DC currents".

5 Implementation Considerations

5.1 Over Voltage and High Voltage Tolerance

All IO cells are capable of over voltage under defined conditions. Refer to the table below for over voltage conditions and dependencies to assure no performance degradation or excessive leakages.

		5V-Only		5V/1.8V		1.8V-Only
		OVT	HV OVT	OVT	HV OVT	OVT
PIOHO, PVPP	VDDO	0–5.5V	4.5–5.5V	0–5.5V	4.5–5.5V	NA
	PAD	0–5.5V	0–9V	0–5.5V	0–9V	NA
PIOH, PAH	VDDO	0–5.5V	NA	0–5.5V	NA	0–1.98V
	PAD	0–5.5V	NA	0–5.5V	NA	0–1.98V
PIOL, PAL	VDD	NA		0–1.98V	NA	0–1.98V
	PAD	NA		0–1.98V	NA	0–1.98V

5.2 Under Voltage Tolerance

Refer to the table below for negative voltage conditions and dependencies to assure no performance degradation or excessive leakages.

		5V-Only		5V/1.8V		1.8V-Only
		-3.5V UVT	-5.5V UVT	-3.5V UVT	-5.5V UVT	UVT
PAN	VDDO	0–5.5V	0–3.5V	0–5.5V	0–3.5V	NA
	VDD	0–5.5V	0–3.5V	0–1.98V	0–1.98V	NA
	PAD	-3.5–0V	-5.5–0V	-3.5–0V	-5.5–0V	NA

5.3 ESD and Latch-Up Considerations

This IO library design and implementation complies with EDM TS18SL1. The IO library implementation in the IC must also comply with the mentioned document.

5.3.1 Typical ESD Performance

Typical ESD performance can be achieved by keeping the supply rails resistance between IO cells and the nearest supply cell below 1Ω. Maximum distance between IO cells and the nearest supply cell within IO ring composed by library cells (including filler and corner cells), which satisfies this requirement, is presented below.

5.3.1.1 TS18SL

	Maximum Distance From Supply Cells		
Backend	**PVDI or PV0I**	**PVDA or PV0A**	**Units**
4M1L	670	1100	µm
5M1L	900	1500	µm
6M1L	1000	1700	µm
4M1T3	1800	2900	µm

Notes:

- If PVDF is used in conjunction with PV0A and PV0I, then PVDF is interchangeable with either of PVDI or PVDA for the maximum distance requirements as listed above.
- If PV0F is used in conjunction with PVDA and PVDI, then PV0F is interchangeable with either of PV0I or PV0A for the maximum distance requirements as listed above.
- If PVDF and PV0F are used without PVDA, PV0A, PVDI and PV0I, then either of them should fulfill both maximum distance requirements as listed above.
- Based on the library topology and data taken from DR2 0018 SL, section "Resistance of Salicided AA and Poly, CS and Vias, Metals".

5.3.2 Maximum ESD Performance

The maximum ESD performance was measured on a dedicated test-chip in which the supply rails resistance is lower than 1Ω, by placing the supply cells closer to each other. Maximum distance between IO cells and the nearest supply cell within IO ring composed by library cells (including filler and corner cells), which is equivalent to the measured test-chip, is presented below.

		ML	MT3	
Performance	**Frontend**	**0.94um Al**	**2.8um Al**	**Units**
Maximum	5V-Only	250	1000	um
	5V/1.8V and 1.8V-Only	80	340	um

5.3.3 Latch-Up Performance

Typical and maximum Latch-Up performance is applicable for 5V circuits and 1.8V circuits of all IO cells.

5.4 Clean Power Cells

When both PVDC and PV0C are used to supply IC circuitry, VDDC from PVDC should be routed also to PV0C, and VSSC from PV0C should be routed also to PVDC.

The routing metals should have a width of at least 20um, and the total resistance between the IC circuitry and each of PVDC and PV0C should not exceed 1Ω. If only one of the PVDC or PV0C is used then this routing is not needed.

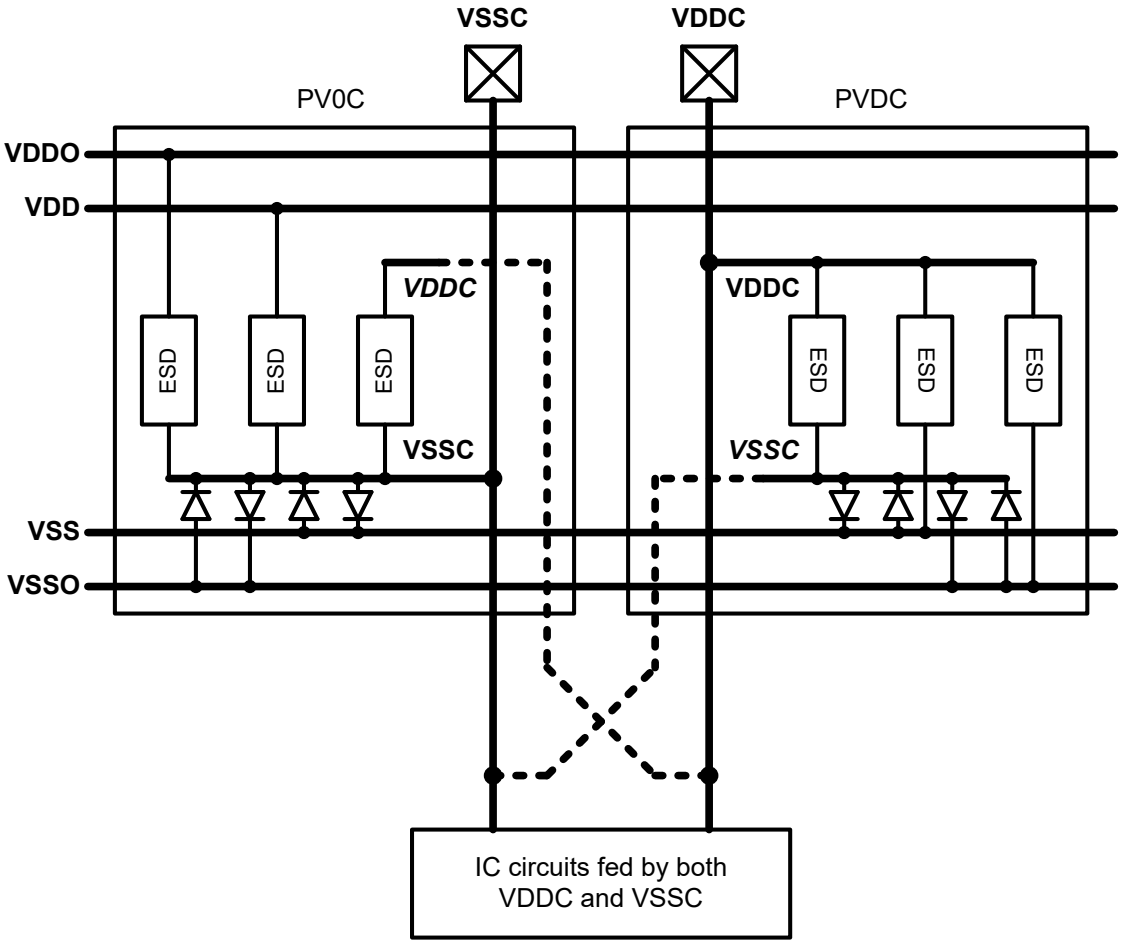

5.5 Supply Sensing

The complementary supply sensing circuits (POK cell) can be used to force High-Z on PAD of the IO cells (PIOH and PIOHO) when VDDO or VDD voltage is too low to assure their proper function.

Same POK cell can be serve all PIOH and PIOHO instances in the same domain, but cannot be shared between domains.

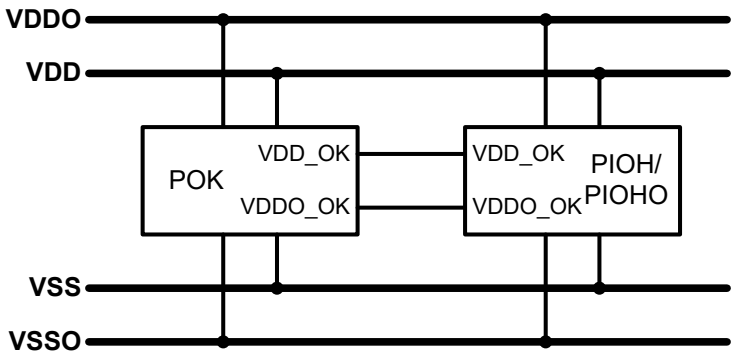

If supply sensing is not needed and POK cell is not used, VDDO_OK and VDD_OK of the IO cells should be connected to VDDO and VDD supplies, respectively, through 1KΩ MOPO resistor.

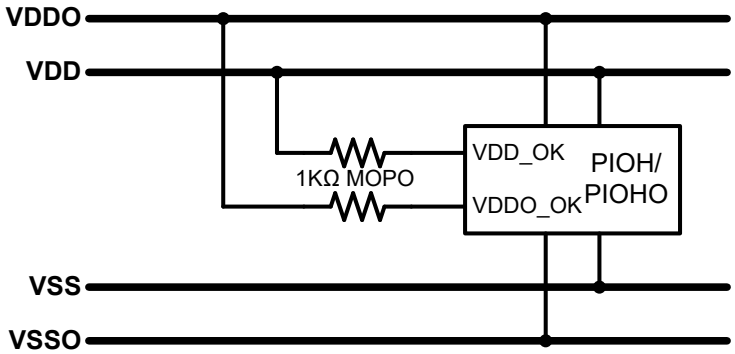

5.6 Minimum Supply Cell Sets

The table below lists the minimum supply cells required in IO ring domain for different IC and system cases.

Description	5V-Only	5V/1.8V	1.8V-Only
Single Power, Single Ground			
Power Supply for IO Side, Core Side and IC	PVDF_50_50	-	PVDF_18_18
Ground Supply for IO Side, Core Side and IC	PV0F_50_50	-	PV0F_18_18
Dual Power, Single Ground			
Power Supply for IO Side and IC circuits	PVDA_50_NA	PVDA_50_NA	PVDA_18_NA
Power Supply for Core Side and IC circuits	PVDI_NA_50	PVDI_NA_18	PVDI_NA_18
Ground Supply for IO Side, Core Side and IC	PV0F_50_50	PV0F_50_18	PV0F_18_18
Single Power, Dual Ground			
Power Supply for IO Side, Core Side and IC	PVDF_50_50	-	PVDF_18_18
Ground Supply for IO Side and IC circuits	PV0A_50_50	-	PV0A_18_18
Ground Supply for Core Side and IC circuits	PV0I_50_50	-	PV0I_18_18
Dual Power, Dual Ground			
Power Supply for IO Side and IC circuits	PVDA_50_NA	PVDA_50_NA	PVDA_18_NA
Power Supply for Core Side and IC circuits	PVDI_NA_50	PVDI_NA_18	PVDI_NA_18
Ground Supply for IO Side and IC circuits	PV0A_50_50	PV0A_50_18	PV0A_18_18
Ground Supply for Core Side and IC circuits	PV0I_50_50	PV0I_50_18	PV0I_18_18

5.7 Design and Layout Considerations

Leaving a digital IO PAD unconnected while setup as input may cause excessive power consumption and therefore should be avoided. If such case occurs, it is better to use the pull-up/down resistor feature.

Filler and Corner cells contain only rail supplies, i.e. M3 metal and up in 4LM, 5LM and 6LM versions. The area underneath the rail metals can be used for any design or layout purpose.

5.8 Test and System Limitations

Power and ground cells show diode behavior between their corresponding supplies. IO cells show diode behavior between PAD and their corresponding ground supply only. No diode is shown between PAD and their corresponding power supply.

The library is intended for designs in which all the signals are complying with the Recommended Operating Conditions as specified in this datasheet.

6 Foundry Waiver

None.

7 Known Bugs

None.

8 Package Content

8.1 Directory Structure

```
tsl18pio520sl_Rev_2023.03
├─ doc                                  Datasheet and application notes
└─ lib
   ├─ verilog
   │  ├─ 1.8V-Only                      Verilog models for 1.8V-Only cells
   │  ├─ 5V-1.8V                        Verilog models for 5V/1.8V cells
   │  └─ 5V-Only                        Verilog models for 5V-Only cells
   ├─ liberty
   │  ├─ 1.8V-Only                      Liberty models for 1.8V-Only cells
   │  ├─ 5V-1.8V                        Liberty models for 5V/1.8V cells
   │  └─ 5V-Only                        Liberty models for 5V-Only cells
   ├─ db
   │  ├─ 1.8V-Only                      Synopsys DB for 1.8V-Only cells
   │  ├─ 5V-1.8V                        Synopsys DB for 5V/1.8V cells
   │  └─ 5V-Only                        Synopsys DB for 5V-Only cells
   ├─ doc
   │  ├─ 1.8V-Only                      HTML datasheets for 1.8V-Only cells
   │  ├─ 5V-1.8V                        HTML datasheets for 5V/1.8V cells
   │  └─ 5V-Only                        HTML datasheets for 5V-Only cells
   ├─ lef
   │  └─ stack                          LEF abstracts for Place & Route tools, Stack version
   ├─ gds
   │  └─ stack                          GDSII layout of all cells, Stack version
   ├─ cdl                               LVS netlist of all cells
   ├─ spc                               Spice netlist with cross capacitance parasitics
   ├─ spc_simple                        Spice netlist with lumped capacitance parasitics
   └─ dfii
      └─ oa
         └─ stack
            └─ PIO520SL_<metal>         Cadence Open Access database, Stack version
               └─ <cell>
                  ├─ symbol             Square symbol view
                  ├─ layout             Layout view
                  ├─ abstract           IC61 abstract view
                  ├─ functional         Functional stop view
                  ├─ hspiceD            HSpice stop view
                  ├─ spectre            Spectre stop view
                  └─ auCdl              CDL stop view
```

8.2 Characterization

The following PVT corners are characterized and available as .lib, Synopsys .db and HTML datasheets.

Format: <Spice Model>/<IO Side Voltage>/<Core Side Voltage>/<Temperature>

5V-Only Cells	5V/1.8V Cells	1.8V-Only Cells
SS/4.5V/4.5V/125C TT/5.0V/5.0V/25C FF/5.5V/5.5V/-40C	SS/4.5V/1.62V/125C TT/5.0V/1.8V/25C FF/5.5V/1.98V/-40C	SS/1.62V/1.62V/125C TT/1.8V/1.8V/25C FF/1.98V/1.98V/-40C

Additional PVT corners can be provided by issuing a help ticket to Tower Semiconductor Customer Portal.

Revision History

Rev.	Date	Change Description
2023.03	1-Mar-2023	New library based on Tower PIO520SL.