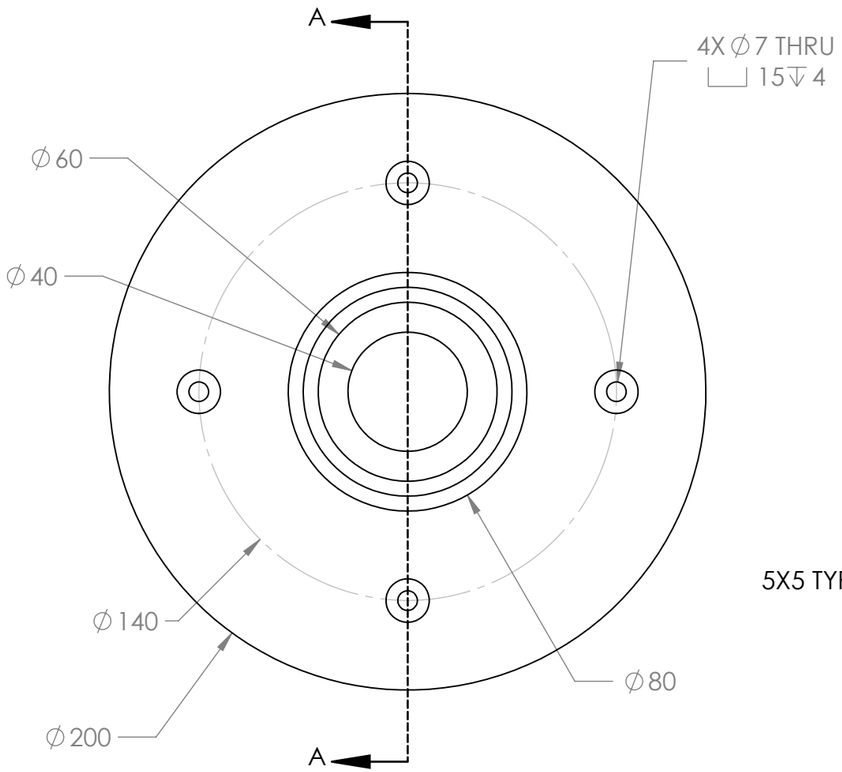

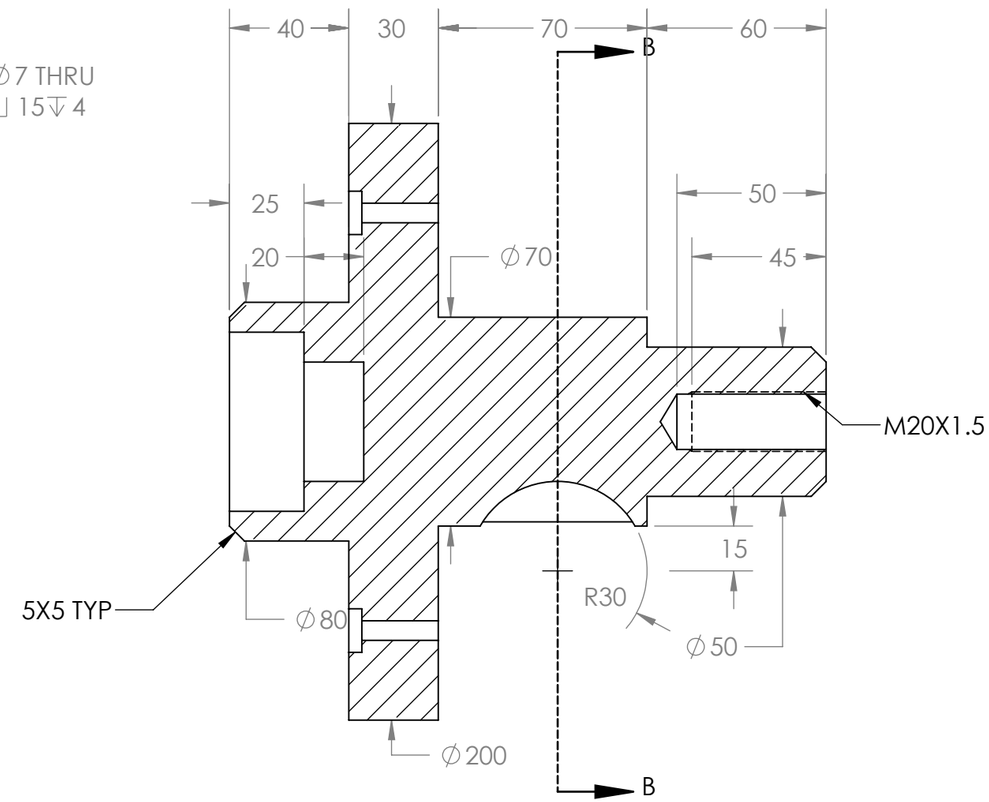

SECTION A-A

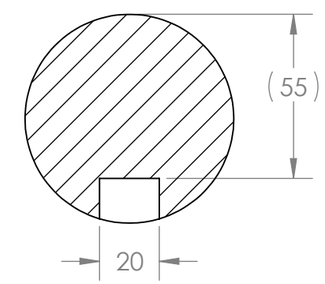

SECTION B-B

SOLIDWORKS Educational Product. For Instructional Use Only.