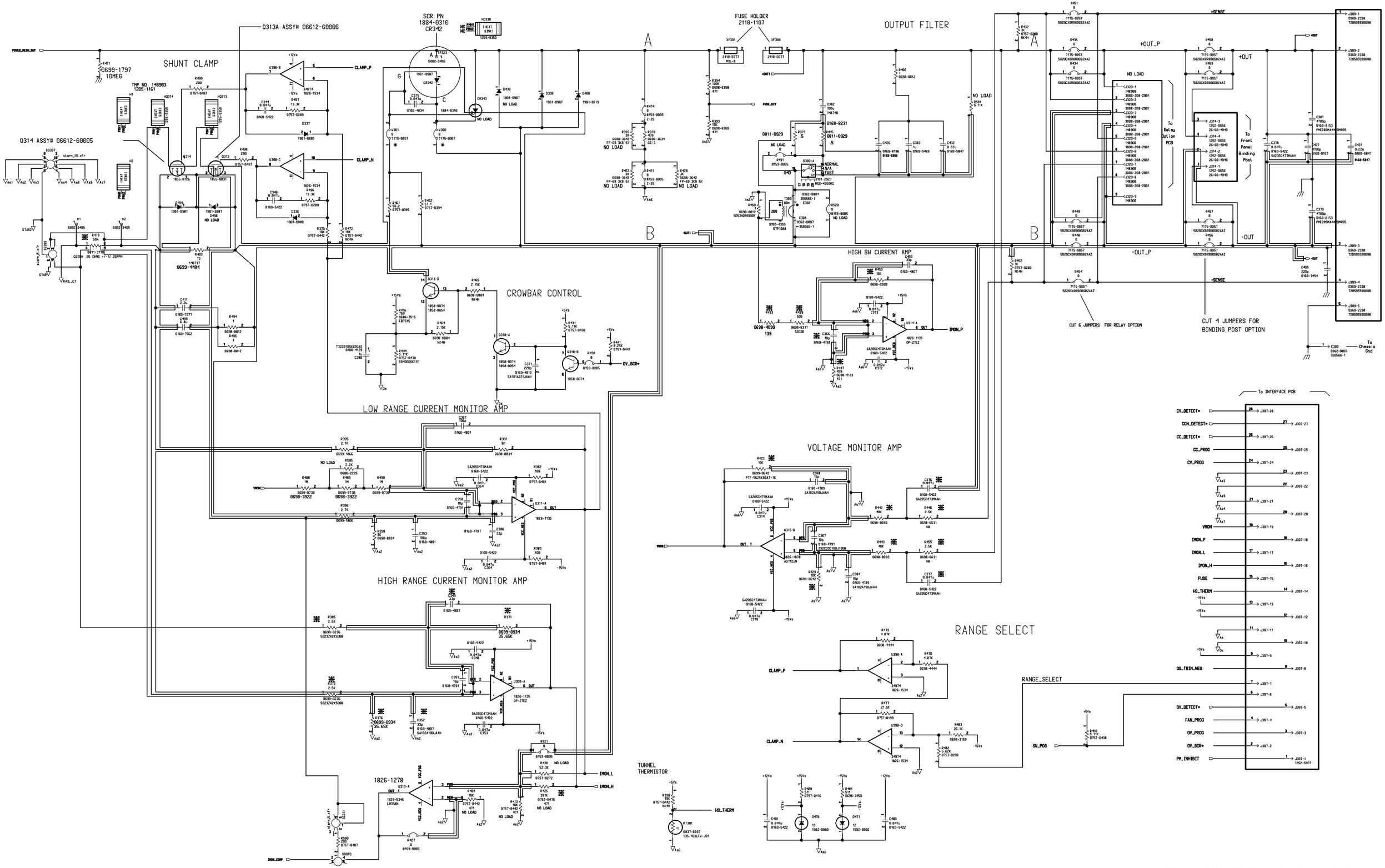


**Figure 6-3. A1 Board schematic (sheet 2)**