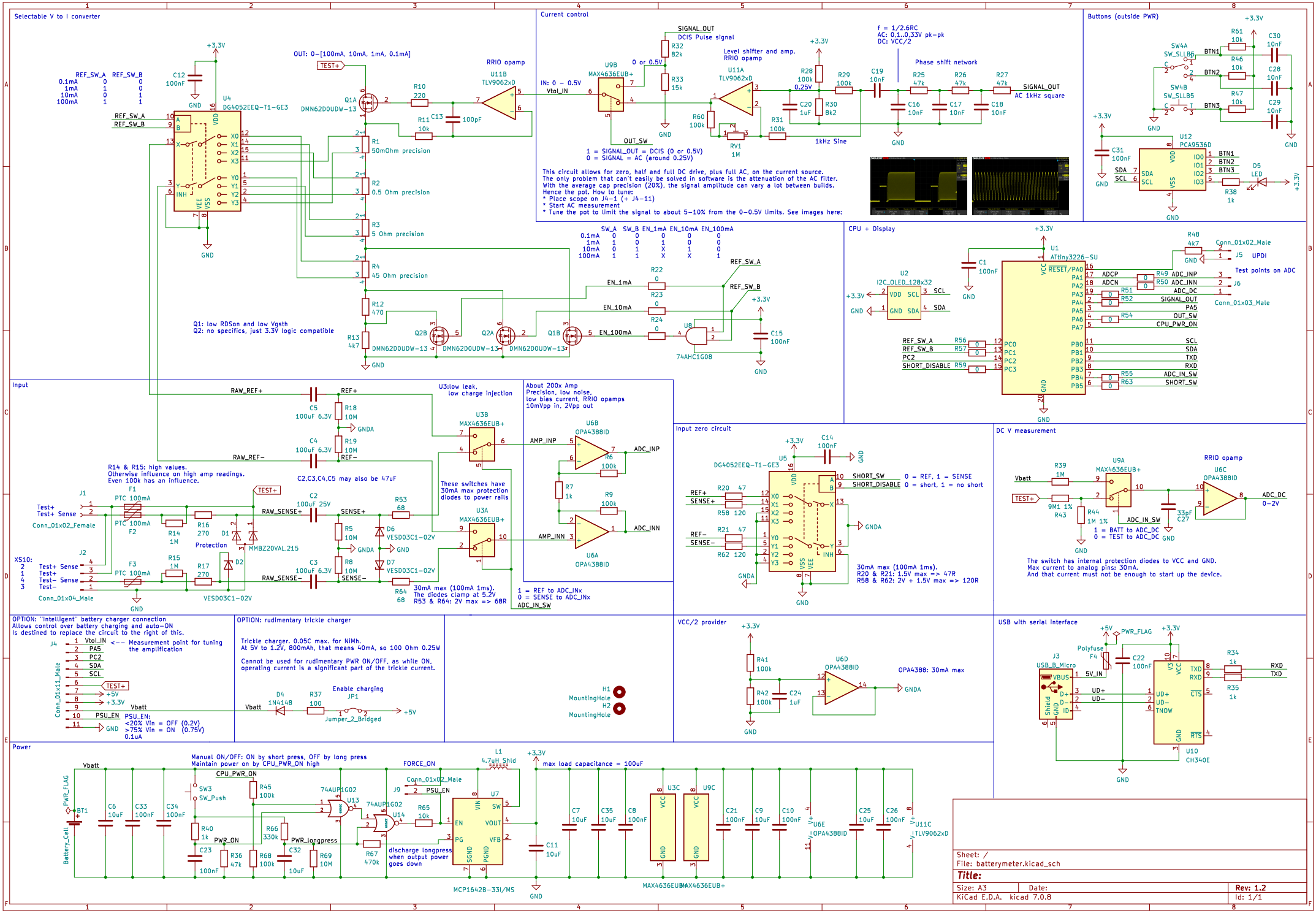
Selectable V to I converter
OUT: 0–[100mA, 10mA, 1mA, 0.1mA]
RRIO opamp
U11B TLV9062xD
U4 DG4052EEQ-T1-GE3
Q1A DMN62D0UDW-13
R10 220
R11 10k
C13 100pF
R1 50mOhm precision
R2 0.5 Ohm precision
R3 5 Ohm precision
R4 45 Ohm precision
R12 470
R13 4k7
Q2B Q2A Q1B DMN62D0UDW-13
Q1: low RDSon and low Vgsth
Q2: no specifics, just 3.3V logic compatible
Current control
SIGNAL_OUT
DCIS Pulse signal
R32 82k
R33 15k
0 or 0.5V
U9B MAX4636EUB+
IN: 0 – 0.5V
Vtol_IN
OUT_SW
1 = SIGNAL_OUT = DCIS (0 or 0.5V)
0 = SIGNAL = AC (around 0.25V)
Level shifter and amp.
RRIO opamp
U11A TLV9062xD
R60 100k
RV1 1M
R31 100k
R28 100k
0.25V
R29 100k
C20 1uF
R30 8k2
1kHz Sine
f = 1/2.6RC
AC: 0.1..0.33V pk-pk
DC: VCC/2
Phase shift network
C19 10nF
R25 47k
R26 47k
R27 47k
C16 10nF
C17 10nF
C18 10nF
SIGNAL_OUT
AC 1kHz square
This circuit allows for zero, half and full DC drive, plus full AC, on the current source.
The only problem that can't easily be solved in software is the attenuation of the AC filter.
With the average cap precision (20%), the signal amplitude can vary a lot between builds.
Hence the pot. How to tune:
* Place scope on J4-1 (+ J4-11)
* Start AC measurement
* Tune the pot to limit the signal to about 5-10% from the 0-0.5V limits. See images here:
Buttons (outside PWR)
SW4A SW_SLLB6
SW4B SW_SLLB5
BTN1 BTN2 BTN3
R61 10k
R46 10k
R47 10k
C30 10nF
C28 10nF
C29 10nF
U12 PCA9536D
C31 100nF
SDA SCL
D5 LED
R38 1k
CPU + Display
U1 ATtiny3226-SU
C1 100nF
U2 I2C_OLED_128x32
R48 4k7
Conn_01x02_Male J5 UPDI
Test points on ADC
R49 ADC_INP
R50 ADC_INN
R51 ADC_DC
R52 SIGNAL_OUT
R54 OUT_SW
CPU_PWR_ON
Conn_01x03_Male J6
R56 R57 R59
REF_SW_A
REF_SW_B
PC2
SHORT_DISABLE
R55 ADC_IN_SW
R63 SHORT_SW
Input
RAW_REF+
RAW_REF–
C5 100uF 6.3V
C4 100uF 6.3V
R18 10M
R19 10M
U3:low leak, low charge injection
U3B MAX4636EUB+
U3A MAX4636EUB+
R14 & R15: high values.
Otherwise influence on high amp readings.
Even 100k has an influence.
C2,C3,C4,C5 may also be 47uF
J1 Test+ Test+ Sense
Conn_01x02_Female
F1 PTC 100mA
F2 PTC 100mA
R14 1M
R16 270
D1 MMBZ20VAL,215
Protection
D2 VESD03C1-02V
C2 100uF 25V
C3 100uF 6.3V
R53 68
R5 10M
R8 10M
D6 VESD03C1-02V
D7 VESD03C1-02V
R64 68
These switches have 30mA max protection diodes to power rails
30mA max (100mA 1ms).
The diodes clamp at 5.2V
R53 & R64: 2V max => 68R
XS10: Test+ Sense Test+ Test- Sense Test-
Conn_01x04_Male
J2
F3 PTC 100mA
R15 1M
R17 270
About 200x Amp
Precision, low noise, low bias current, RRIO opamps
10mVpp in, 2Vpp out
U6B OPA4388ID
U6A OPA4388ID
AMP_INP
AMP_INN
ADC_INP
ADC_INN
R6 100k
R7 1k
R9 100k
1 = REF to ADC_INx
0 = SENSE to ADC_INx
ADC_IN_SW
Input zero circuit
U5 DG4052EEQ-T1-GE3
C14 100nF
REF+ SENSE+ REF– SENSE–
R20 47 R58 120 R21 47 R62 120
SHORT_SW 0 = REF, 1 = SENSE
SHORT_DISABLE 0 = short, 1 = no short
30mA max (100mA 1ms).
R20 & R21: 1.5V max => 47R
R58 & R62: 2V + 1.5V max => 120R
DC V measurement
U9A MAX4636EUB+
U6C OPA4388ID
RRIO opamp
Vbatt
R39 1M
R43 9M1 1%
R44 1M 1%
33pF C27
ADC_DC 0–2V
1 = BATT to ADC_DC
0 = TEST to ADC_DC
The switch has internal protection diodes to VCC and GND.
Max current to analog pins: 30mA.
And that current must not be enough to start up the device.
OPTION: "Intelligent" battery charger connection
Allows control over battery charging and auto-ON
is destined to replace the circuit to the right of this.
J4 Conn_01x11_Male
Vtol_IN <-- Measurement point for tuning the amplification
PA5 PC2 SDA SCL
PSU_EN
PSU_EN: <20% Vin = OFF (0.2V) >75% Vin = ON (0.75V) 0.1uA
OPTION: rudimentary trickle charger
Trickle charger. 0.05C max. for NiMh.
At 5V to 1.2V, 800mAh, that means 40mA, so 100 Ohm 0.25W
Cannot be used for rudimentary PWR ON/OFF, as while ON, operating current is a significant part of the trickle current.
D4 1N4148
R37 100
Enable charging
JP1 Jumper_2_Bridged
H1 MountingHole
H2 MountingHole
VCC/2 provider
R41 100k
R42 100k
C24 1uF
U6D OPA4388ID
OPA4388: 30mA max
USB with serial interface
J3 USB_B_Micro
Polyfuse F4
C22 100nF
U10 CH340E
R34 1k
R35 1k
RXD TXD
Power
Battery_Cell BT1
C6 10uF C33 100nF C34 100nF
Manual ON/OFF: ON by short press, OFF by long press
Maintain power on by CPU_PWR_ON high
SW3 SW_Push
R45 100k
R40 1k
C23 100nF
R36 47k
R68 100k
R66 330k
C32 10uF
R69 10M
R67 470k
R65 10k
74AUP1G02 U13 U14
FORCE_ON
Conn_01x02_Male J9 PSU_EN
L1 4.7uH Shld
U7 MCP1642B-33I/MS
C11 10uF
max load capacitance = 100uF
C7 10uF C35 10uF C8 100nF
U3C U9C MAX4636EUB+
C21 100nF C9 10uF C10 100nF
U6E OPA4388ID
C25 10uF C26 100nF
U11C TLV9062xD
discharge longpress when output power goes down
Sheet: /
File: batterymeter.kicad_sch
Title:
Size: A3
Date:
Rev: 1.2
KiCad E.D.A. kicad 7.0.8
Id: 1/1