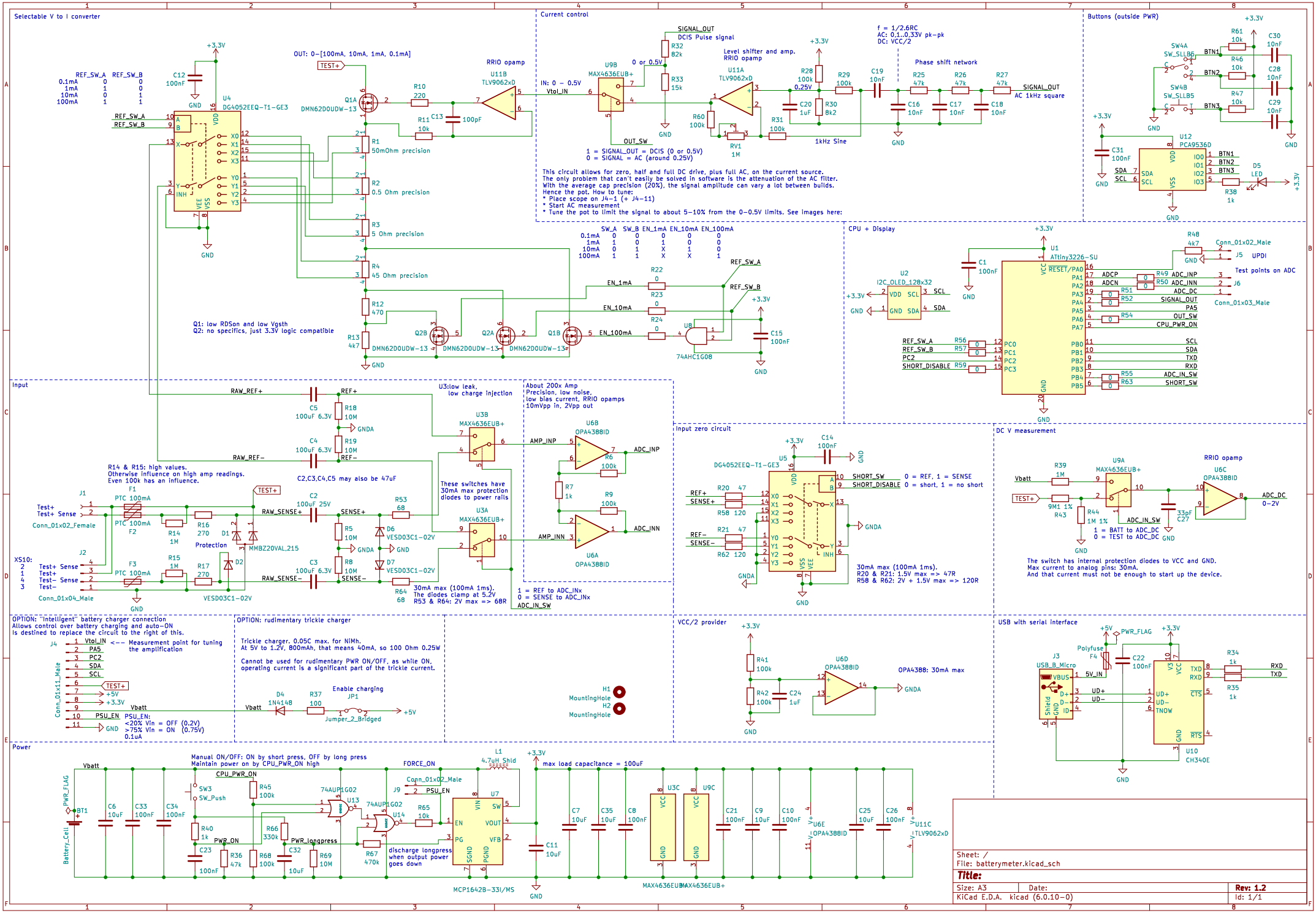
Selectable V to I converter
Current control
Buttons (outside PWR)
CPU + Display
Input
Input zero circuit
DC V measurement
OPTION: "Inteligent" battery charger connection
OPTION: rudimentary trickle charger
VCC/2 provider
USB with serial interface
Power
Sheet: /
File: batterymeter.kicad_sch
Title:
Size: A3
Date:
Rev: 1.2
KiCad E.D.A. kicad (6.0.10-0)
Id: 1/1