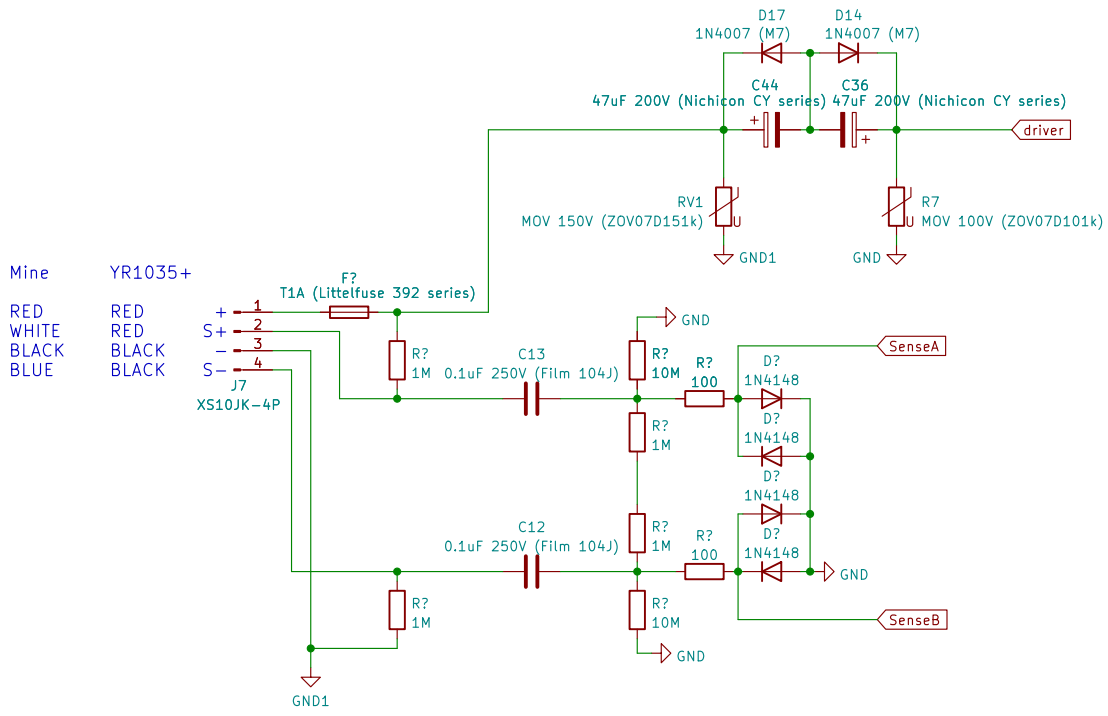

View direction -->

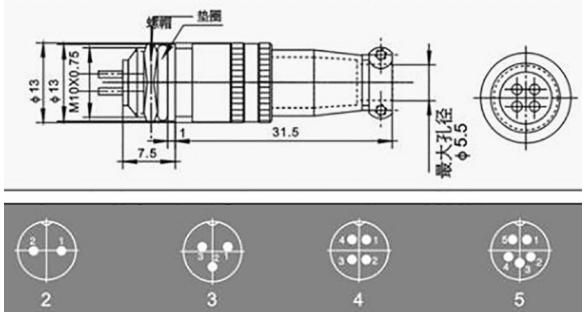

Sheet: /
File: YR1035Plus.kicad_sch

Title:

Size: A4	Date:	Rev:
KiCad E.D.A. eeschema (6.0.7-1)-1		Id: 1/1