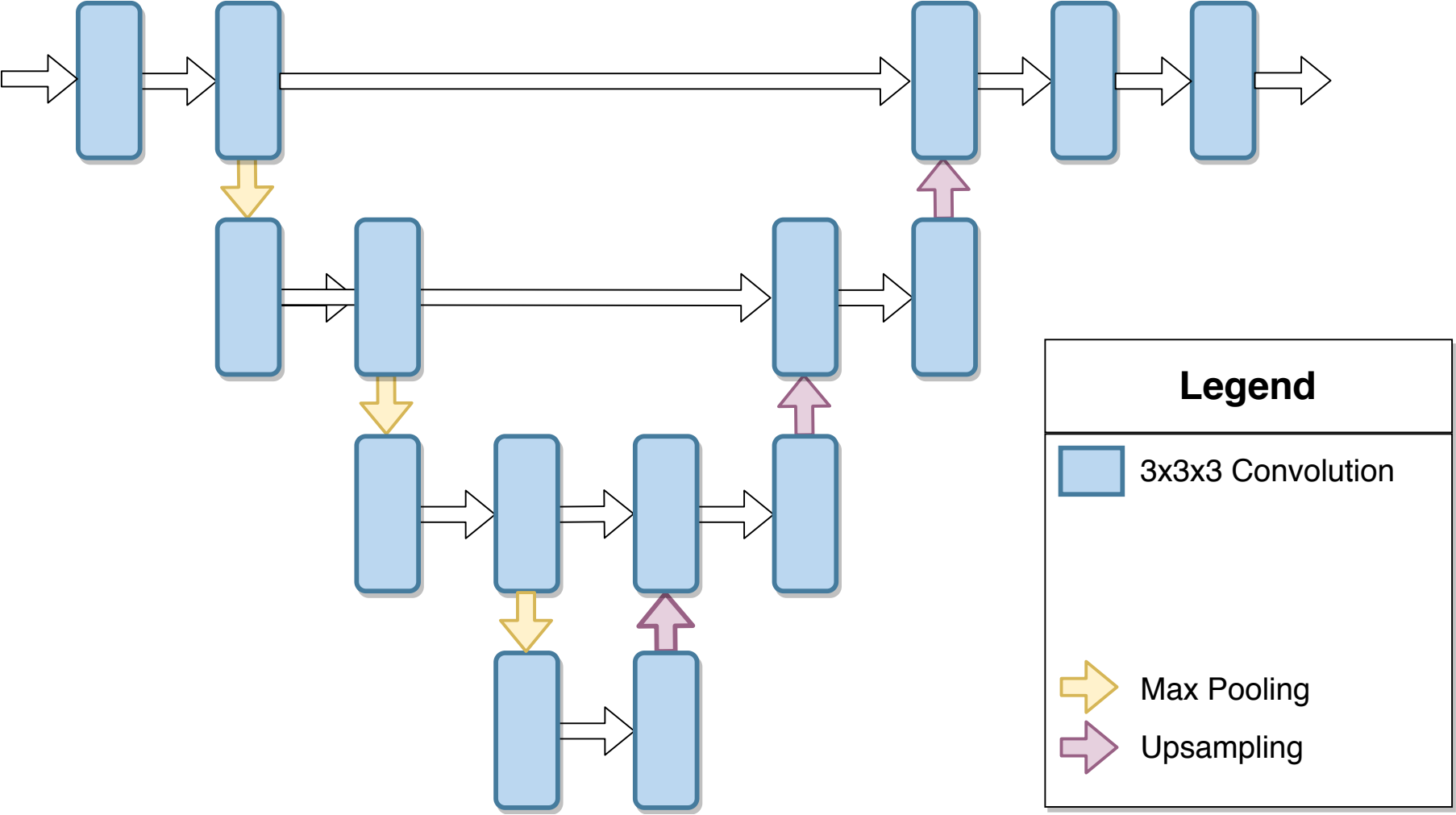
Legend
3x3x3 Convolution
Max Pooling
Upsampling