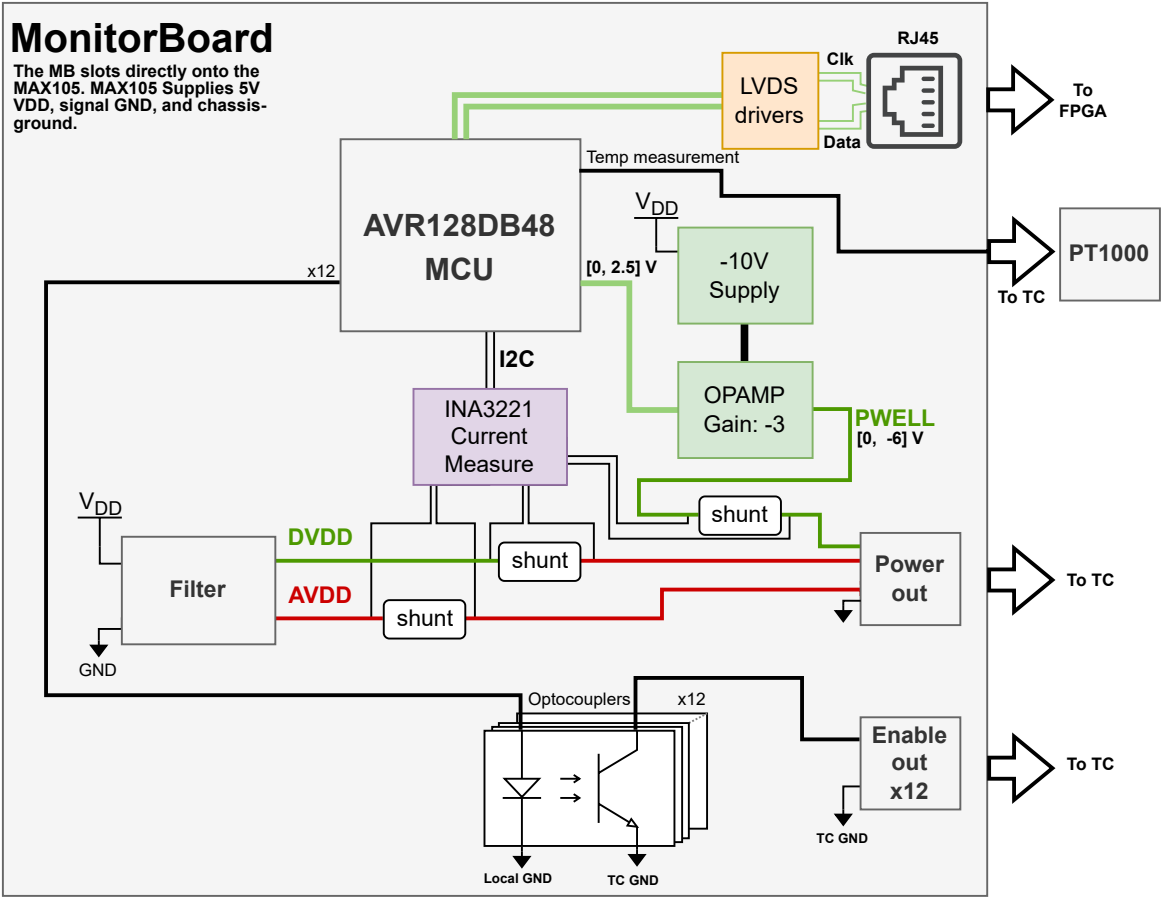
MonitorBoard
The MB slots directly onto the MAX105. MAX105 Supplies 5V VDD, signal GND, and chassis-ground.
RJ45
LVDS drivers
Clk
Data
To FPGA
Temp measurement
AVR128DB48 MCU
VDD
-10V Supply
PT1000
To TC
x12
[0, 2.5] V
I2C
INA3221 Current Measure
OPAMP Gain: -3
PWELL
[0, -6] V
shunt
VDD
DVDD
Filter
AVDD
shunt
shunt
Power out
To TC
GND
Optocouplers
x12
Enable out x12
To TC
TC GND
Local GND
TC GND