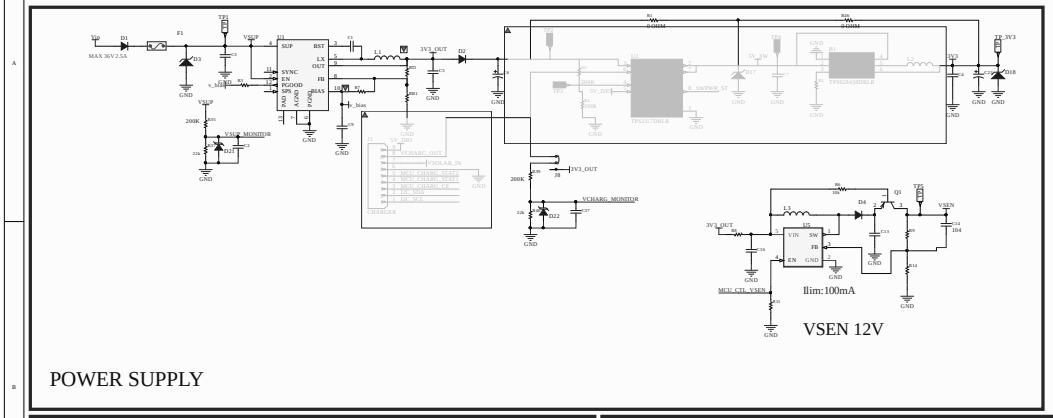
POWER SUPPLY
VSEN 12V
Ilim:100mA

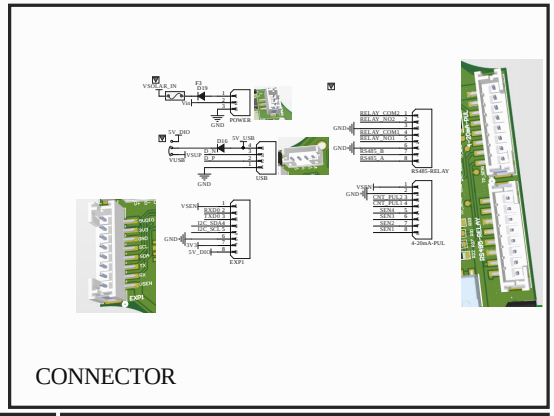
CONNECTOR

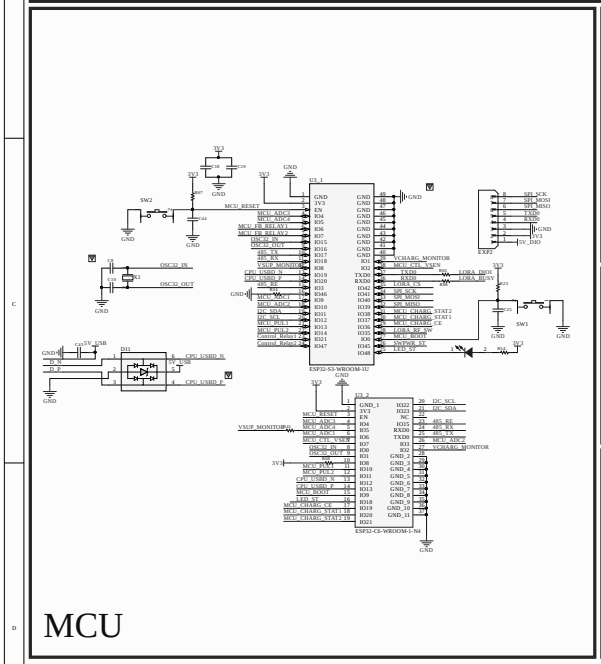
MCU

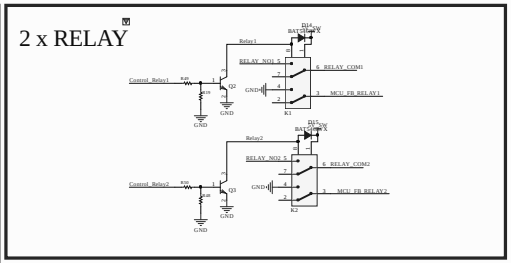
2 x RELAY

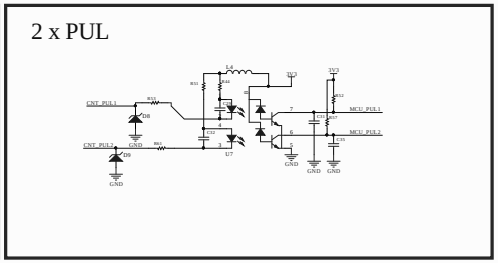
2 x PUL

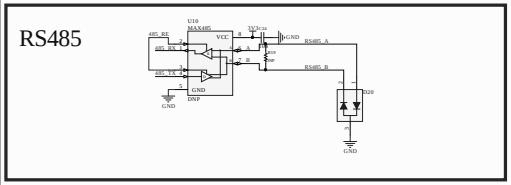
RS485

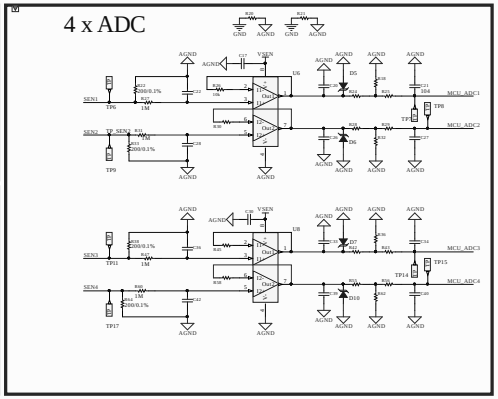
4 x ADC

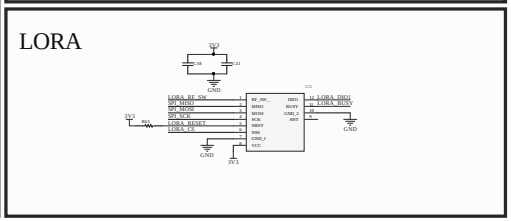
LORA