POWER

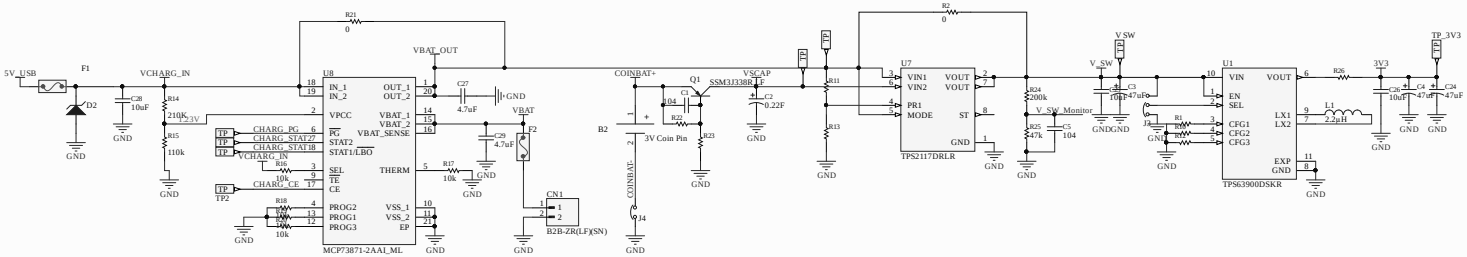

MCU

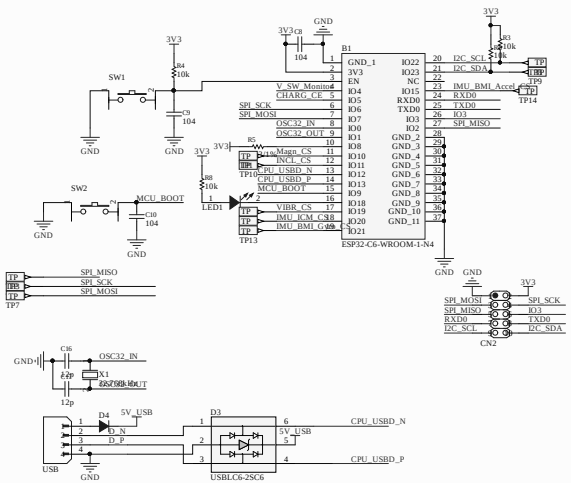

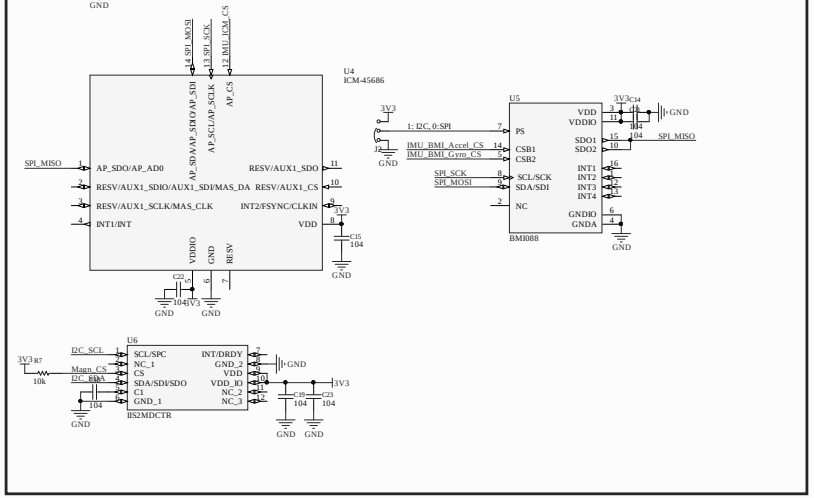

Title		
Size A2	Number	Revision
Date: 9/10/2025	Sheet of	
File: D:\PCB\..\ESP32_Accelermeter.SchDoc	Drawn By:	

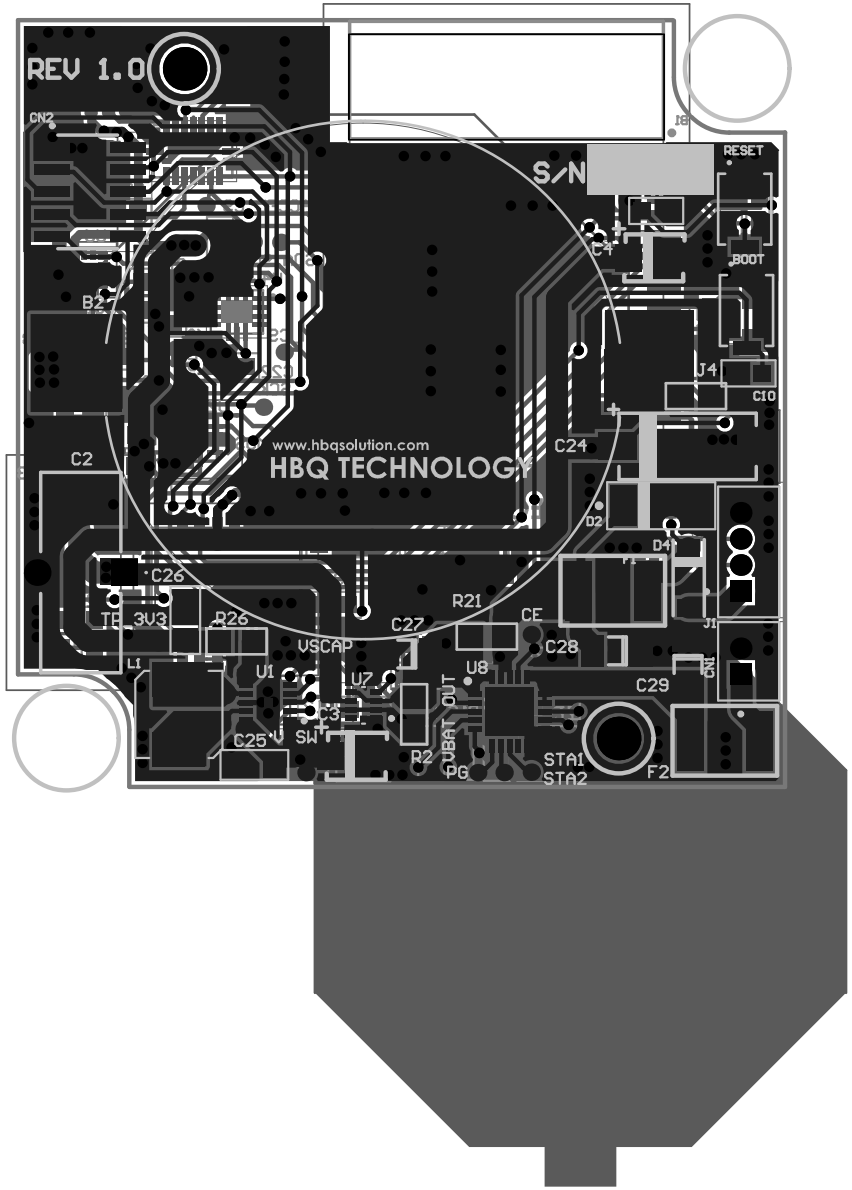
REV 1.0
CN2
S/N
RESET
BOOT
C4
B2
J4
C10
C24
www.hbqsolution.com
HBQ TECHNOLOGY
C2
D2
D4
C26
TB_3V3
R26
R21
C27
CE
J1
VSCAP
C28
L1
U1
U7
U8
C29
CN1
C3
C25
SW
R2
VBAT_OUT
PG
STA1
STA2
F2