POWER

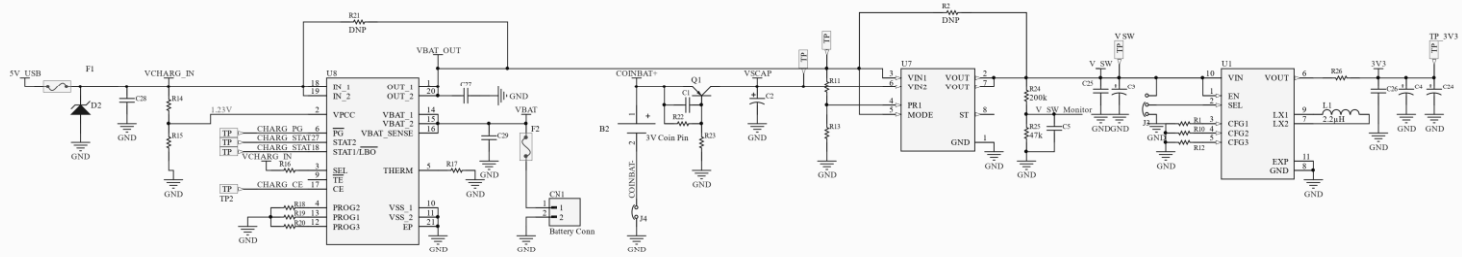

MCU

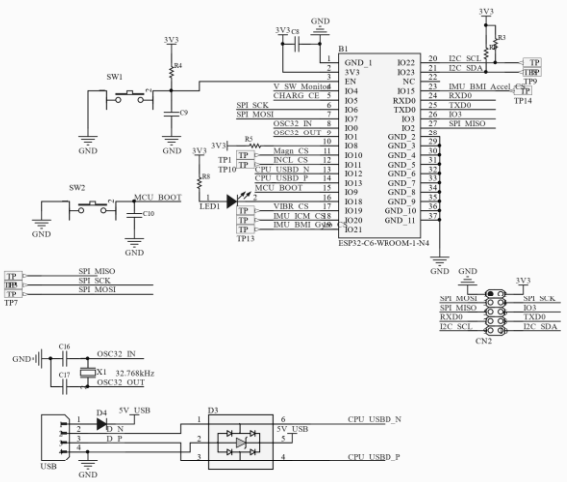
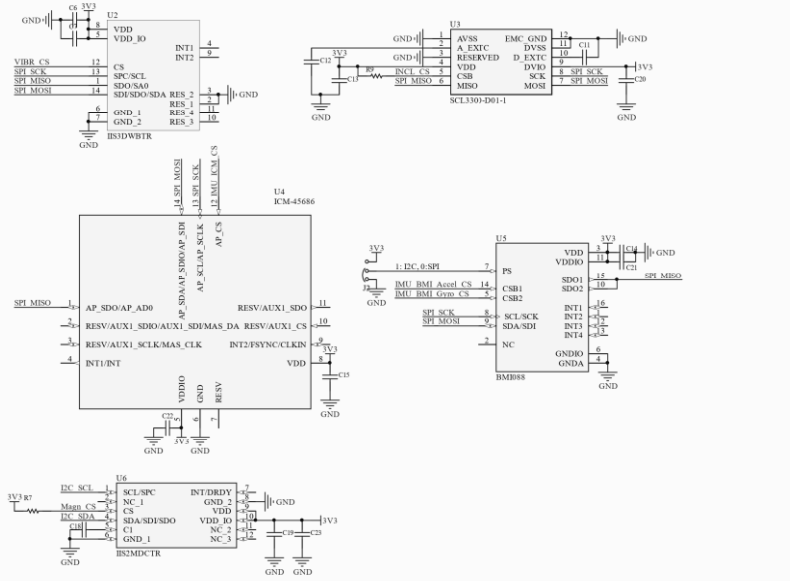
SENSOR