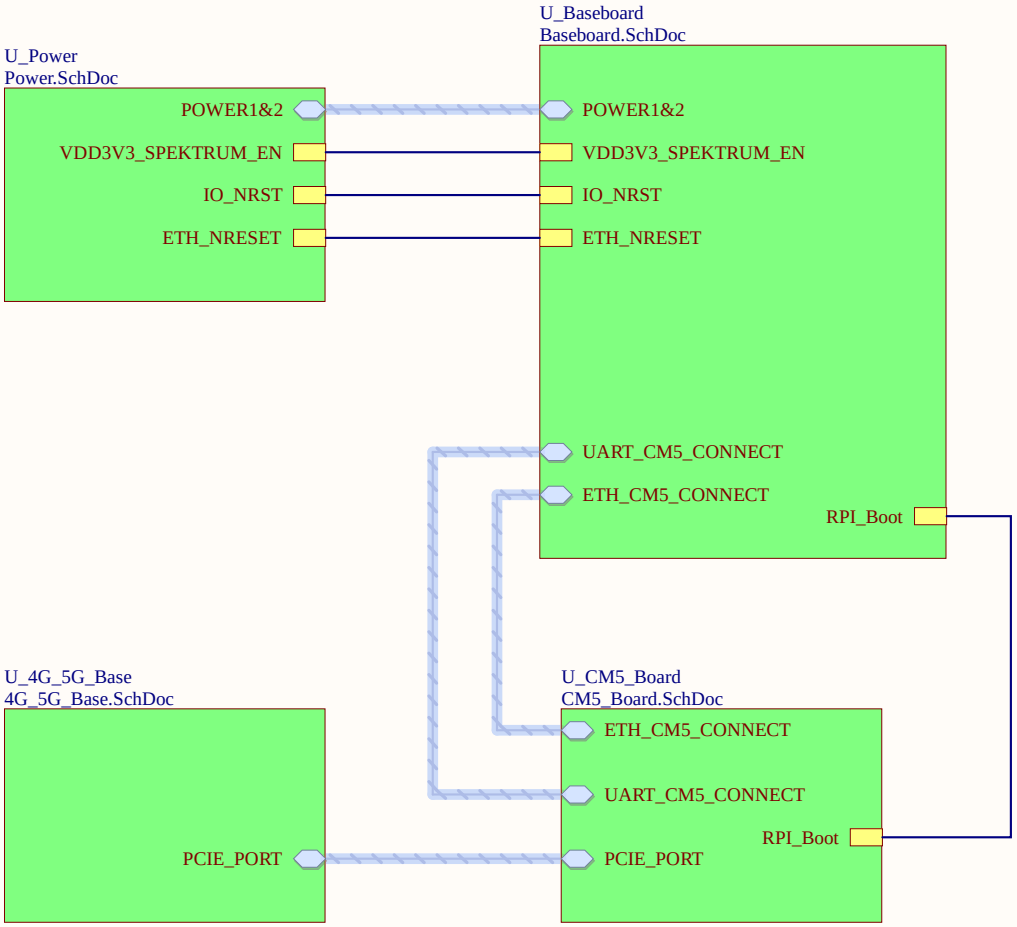

Title		
Size A	Number	Revision
Date: 4/6/2026	Sheet of	
File: D:\FirmwareGit\..\Top.SchDoc	Drawn By:	

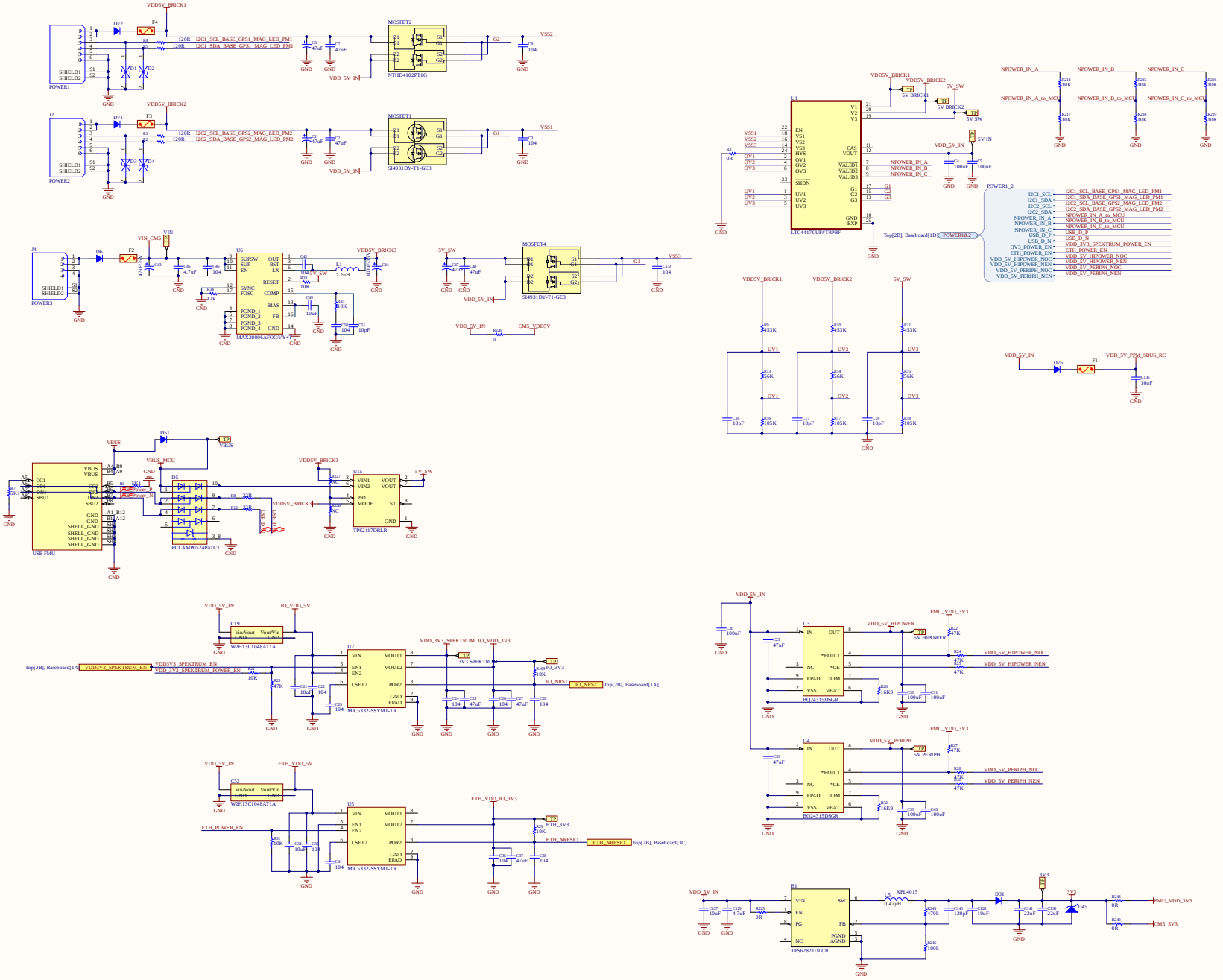

Title		
Size	Number	Revision
C		
Date: 4/6/2026	Sheet of	
File: D:/FirmwareGit/...iPower.SchDoc	Drawn By:	

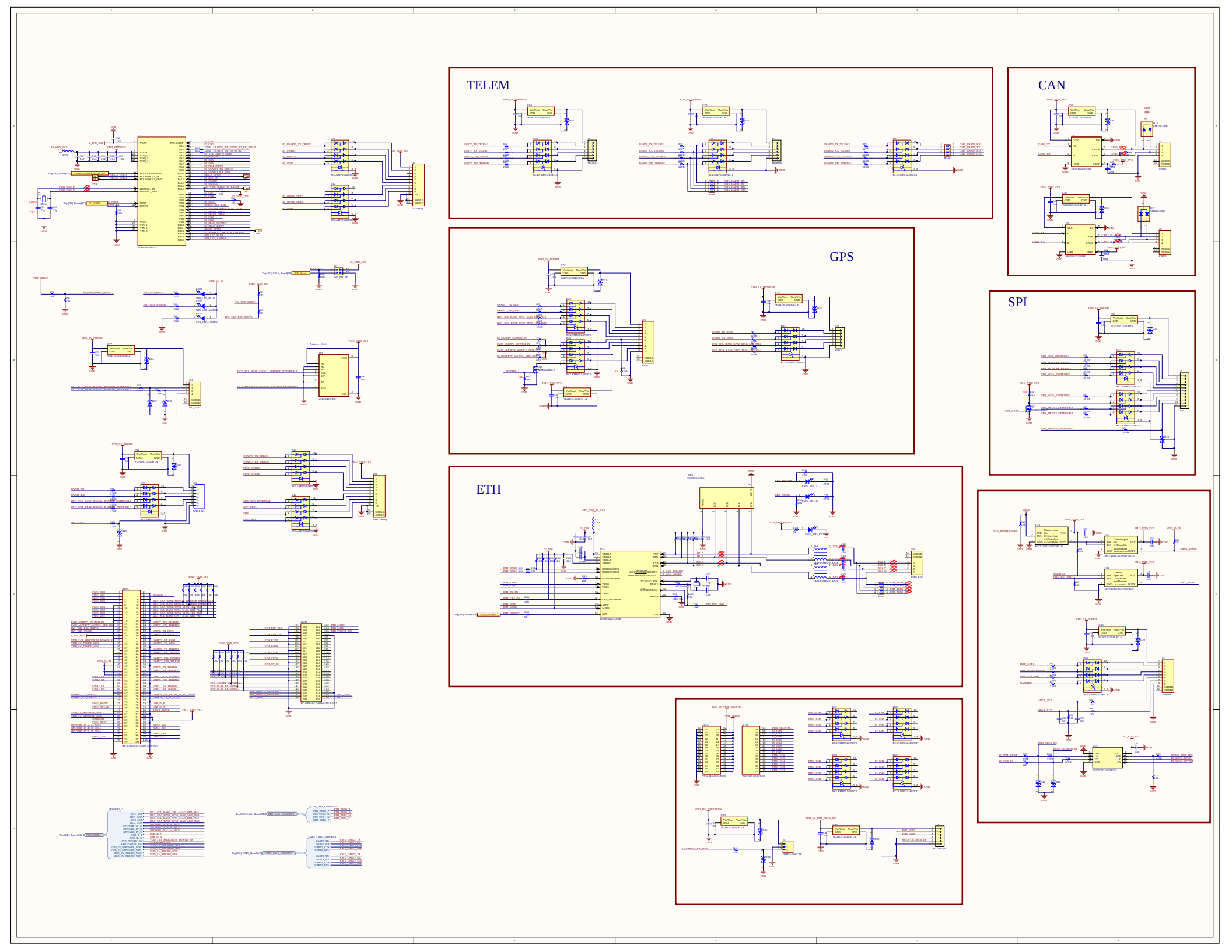
TELEM
GPS
CAN
SPI
ETH

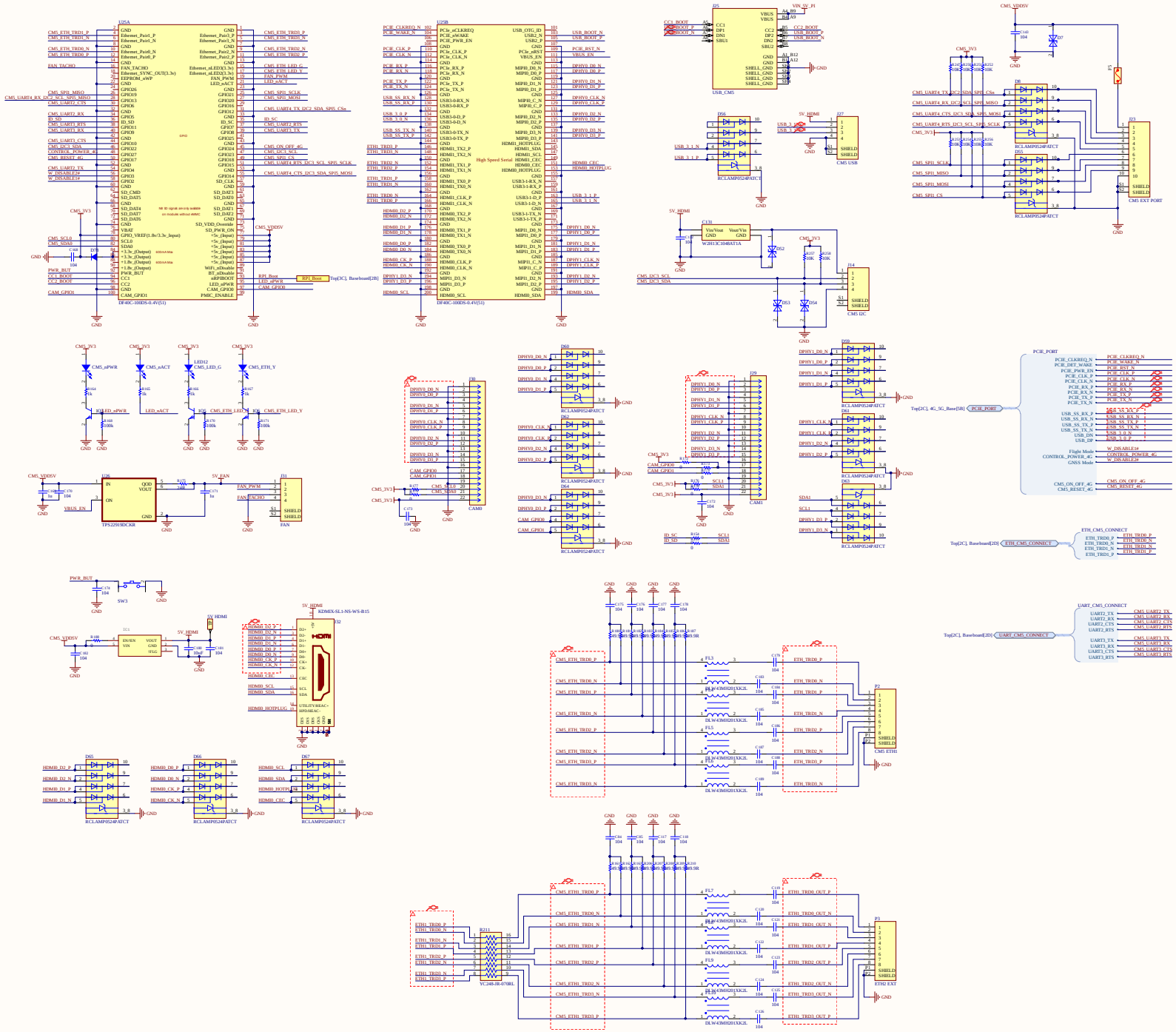
U25A
U25B
J25
USB_CM5
J27
CMS USB
J23
CMS EXT PORT
J14
CMS I2C
J31
FAN
J29
CAM1
J30
CAM0
U26
TPS22918DCKR
U2
HDMIX-SL1-NS-WS-B15
P2
CMS ETH1
P3
ETH2 EXT
PCIE_PORT
ETH_CMS_CONNECT
UART_CMS_CONNECT
Title
Size
Number
Revision
Date:
Sheet
of
File:
Drawn By:

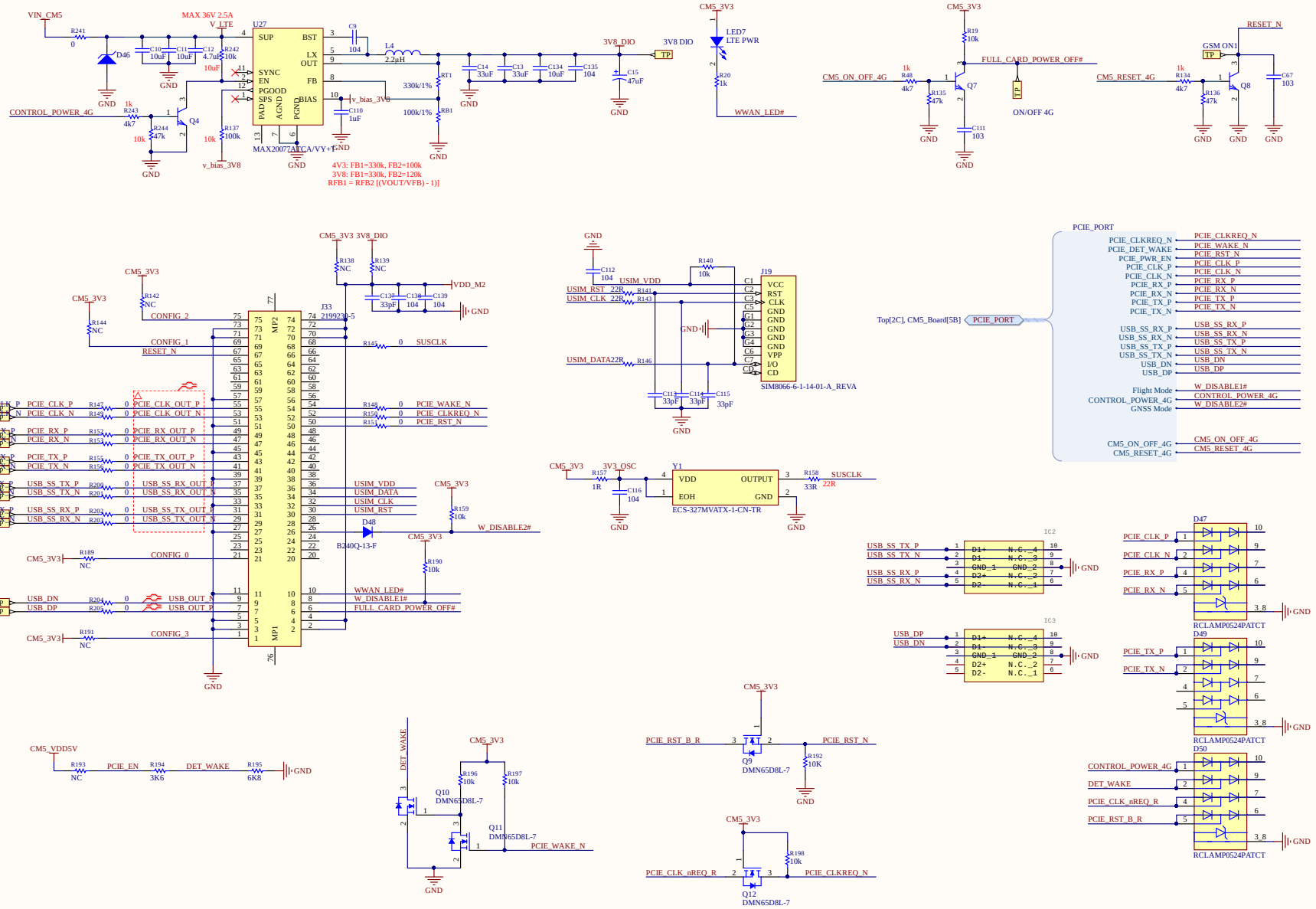
VIN_CM5
MAX 36V 2.5A
V_LTE
U27
SUP
BST
LX
OUT
SYNC
EN
PGOOD
SPS
PAD
AGND
PGND
FB
BIAS
MAX20077ATCA/VY+T
L4
2.2uH
3V8_DIO
CM5_3V3
LED7
LTE PWR
WWAN_LED#
CONTROL_POWER_4G
Q4
v_bias_3V8
GND
4V3: FB1=330k, FB2=100k
3V8: FB1=330k, FB2=120k
RFB1 = RFB2 [(VOUT/VFB) - 1)]
CM5_ON_OFF_4G
Q7
FULL_CARD_POWER_OFF#
ON/OFF 4G
CM5_RESET_4G
Q8
RESET_N
GSM ON1
J33
2199230-5
MP2
MP1
CONFIG_2
CONFIG_1
CONFIG_0
CONFIG_3
SUSCLK
PCIE_CLK_P
PCIE_CLK_N
PCIE_RX_P
PCIE_RX_N
PCIE_TX_P
PCIE_TX_N
USB_SS_TX_P
USB_SS_TX_N
USB_SS_RX_P
USB_SS_RX_N
USB_DN
USB_DP
USB_OUT_N
USB_OUT_P
USIM_VDD
USIM_DATA
USIM_CLK
USIM_RST
WWAN_LED#
W_DISABLE1#
FULL_CARD_POWER_OFF#
W_DISABLE2#
VDD_M2
D48
B240Q-13-F
J19
SIM8066-6-1-14-01-A_REVA
USIM_DATA22R
Y1
ECS-327MVATX-1-CN-TR
3V3_OSC
PCIE_PORT
Top[2C], CM5_Board[5B]
PCIE_CLKREQ_N
PCIE_WAKE_N
PCIE_RST_N
PCIE_PWR_EN
PCIE_DET_WAKE
Flight Mode
GNSS Mode
CONTROL_POWER_4G
CM5_ON_OFF_4G
CM5_RESET_4G
IC2
IC3
D47
D49
D50
RCLAMP0524PATCT
CM5_VDD5V
PCIE_EN
DET_WAKE
Q10
DMN65D8L-7
Q11
PCIE_WAKE_N
PCIE_RST_B_R
PCIE_RST_N
Q9
PCIE_CLK_nREQ_R
PCIE_CLKREQ_N
Q12
Title
Size
B
Number
Revision
Date: 4/6/2026
Sheet of
File: D:\FirmwareGit\..\4G_5G_Base.SchDoc
Drawn By:

Comment	Footprint	Quantity	Designator
0603WAF499JT5E	SM-0603-R	24	R37, R38, R40, R41, R45, R47, R49, R50, R161, R162, R163, R180, R181, R182, R183, R184, R185, R186, R187, R206, R207, R208, R209, R210
0603WAF1200T5E	SM-0603-R	13	R1, R2, R4, R5, R36, R51, R70, R71, R75, R77, R102, R103, R104
0603WAF1202T5E	SM-0603-R	1	R34
0603WAF2200T5E	SM-0603-R	30	R53, R54, R59, R61, R67, R68, R73, R76, R79, R81, R84, R85, R86, R87, R89, R91, R93, R94, R95, R96, R97, R98, R99, R100, R107, R108, R109, R111, R221, R222
0603WAF4701T5E	SM-0603-R	3	R48, R134, R243
0603WAF4702T5E	SM-0603-R	10	R22, R23, R24, R25, R27, R28, R30, R135, R136, R244
0603WAF4703T5E	SM-0603-R	1	R245
0603WAJ0220T5E	SM-0603-R	10	R26, R32, R72, R74, R78, R80, R141, R143, R146, R158
2199230-5	121991190_B_M_KEY_V2	1	J33
B240A-13-F	DO-214AC,SMA	3	D51, D71, D72
B240Q-13-F	DO-214AC,SMA	2	D6, D31
BQ24315DSGR	DSG8_P9X1P6	2	U3, U4
C2012X5R1A476MTJ00E	SM-0805 CAP, C1206	10	C2, C7, C13, C14, C23, C25, C27, C33, C37, C48
CL10A105KA8NNNC	sm-0603-c	2	C57, C110
CL10A106MQ8NNNC	sm-0603-c	7	C21, C34, C49, C127, C128, C136, C180
CL10A226MQ8NRNC	sm-0603-c	2	C130, C141
CL108104KB8NNNC	sm-0603-c, C1608-0603	77	C3, C8, C9, C22, C24, C26, C28, C29, C35, C36, C38, C41, C42, C46, C50, C54, C55, C56, C58, C59, C60, C61, C66, C67, C69, C74, C78, C79, C81, C83, C84, C85, C88, C89, C90, C92, C94, C96, C97, C101, C104, C106, C108, C111, C112, C116, C117, C118, C119, C120, C121, C122, C123, C124, C125, C126, C132, C133, C135, C138, C139, C143, C174, C175, C176, C177, C178, C179, C181, C182, C183, C184, C185, C186, C187, C188, C189
CL10C100JB8NNNC	sm-0603-c	4	C16, C17, C18, C51
CL10C121JB8NNNC	sm-0603-c	1	C140
CL10C200JB8NNNC	sm-0603-c	2	C62, C64
CL10C330JB8NNNC	sm-0603-c	4	C113, C114, C115, C137
CL21A106KAYNNNE	SM-0805 CAP	6	C10, C11, C12, C45, C129, C134
DF40C-100DS-0.4V(51)	MODULE_SC0682-PartA, MODULE_SC0682-PartB	2	U25A, U25B
DF40HC(3.0)-100DS-0.4V(51)	Conn_Pixhawk_v6X-PartA	1	J20A
DLW43MH201XK2L	FIL_DLW43MH201XK2L	10	FL1, FL2, FL3, FL4, FL5, FL6, FL7, FL8, FL9, FL10
DMN65D8L-7	SOT95P280X125-3N, SOT23N, SO-G3	12	Q1, Q2, Q3, Q4, Q5, Q6, Q7, Q8, Q9, Q10, Q11, Q12
ECS-327MVATX-1-CN-TR	OSC_ECS-1618-300-BN-TR	1	Y1
ERJ3EKF1001V	SM-0603-R	1	R82
GRM31CR61A107ME05L	C1206	7	C4, C5, C20, C30, C31, C39, C40
HC-P8B40C-50DS-0.4V-4.0-02	Conn_Pixhawk_v6X-PartB	1	J20B
LTC4417CUF#TRPBF	QFN50P400X400X80-25N	1	U1
MAX20006AFOC/VY+T	MAX20006AFOCVY	1	U6
MAX20077ATCA/VY+T	12-WFDFN	1	U27
MIC5332-5SYMT-TR	SON50P200X200X60-8N	2	U2, U5
NTHD4102PT1G	CHIPFET_1206A-03_ONS	1	MOSFET2
RC0603FR-0710KL	SM-0603-R	54	R19, R21, R29, R31, R33, R35, R42, R43, R44, R46, R83, R88, R90, R92, R112, R113, R137, R140, R159, R169, R190, R192, R196, R197, R198, R214, R215, R216, R217, R218, R219, R229, R230, R231, R232, R233, R234, R235, R236, R237, R238, R239, R240, R242, R247, R250, R251, R252, R253, R254, R255, R256, R257, R258
RC0603FR-07100KL	SM-0603-R	4	R168, R170, R171, R246
RCLAMP0524PATCT	DIO_RCLAMP0524PATCT	34	D5, D8, D11, D13, D14, D15, D20, D22, D25, D26, D30, D32, D34, D37, D43, D44, D47, D49, D50, D55, D56, D57, D58, D59, D60, D61, D62, D63, D64, D65, D66, D67, D68, D69
RT9742GGJ5	SOT94P280X100-5N	1	IC1
SI4931DY-T1-GE3	SO-8_MS-012_VIS	2	MOSFET1, MOSFET4
STM32F103C8T7	QFP50P900X900X160-48N	1	U7
SWPA4030S1R5NT	INDUCTOR 4	1	L1
TAJB476K010RNJ	Cap SMD Tant, Cap SMD Tant 10u	5	C1, C6, C15, C44, C47
TAXM24M2QLFCDT1T	ECS801830JGNTR	1	X1
TPD4EUSB30DQAR	DQA(R-PUSON-N10)	2	IC2, IC3
TPESD101-B1-02ELS	DFN62X32X32-2N-V	27	D1, D2, D3, D4, D7, D9, D10, D16, D18, D19, D21, D23, D24, D27, D28, D29, D33, D35, D36, D38, D39, D40, D41, D42, D52, D53, D54
TPS21170RLR	SOTFL50P160X60-8N	1	U15
TPS62821DLCR	DLC0008A	1	B1
W2H13C104BAT1A	CAP_48AT1F_AVX	16	C19, C32, C52, C53, C65, C68, C72, C75, C77, C80, C82, C87, C91, C93, C95, C131
XFL4015-471MEC	IND_XFL4015_COC-M	1	L5