LR62E, M262833 LoRa and LoRa-BLE5.2 Modules

Ver 1.01 June 2021

LoRa Sensor, Beacon Applications

LR62E LoRa transceiver module uses a Semtech SX1262 sub-GHz radio transceiver. An u.FL connector is on-board for external antenna. It is paired with Fanstel BM833, a low cost Nordic nRF52833 BLE 5.2 module. The Cortex M4F MCU in BM833 manages LR62E through SPI interface. BM833 GPIOs can be used for sensor data input or control output. Android OS app is available for field set up through Bluetooth interface.

BM833 + LR62E pair can be used in LoRaWAN™ application. LoRaWan stacks are not available from Fanstel.

Cloud Connection, LoRa Gateway

In the 2nd application example, BM833 in a gateway relays messages to a cloud server (AWS, Microsoft, Google, Fanstel development server, etc.) through Ethernet, WiFi, or LTE network.

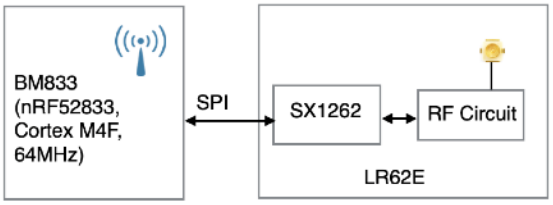

LR62E Specifications:

- Semtech SX1262 transceiver
- +20 dBm TX power (USA) at 902 to 928 MHz.
- Low power consumption: 4.2 mA at RX.
- FCC ID:X8WLR62E
- ISED ID:4100A-LR62E

M262833 Specifications:

- Nordic nRF52 with ARM Cortex M4F at 64 MHz.
- Serial Wire Debug (SWD)
- Over-the-Air (OTA) firmware update
- Flash/RAM: 512KB/128KB
- 12 bit/200KSPS ADC, 8 configurable channels with programmable gain.
- 3X SPI Master/Slave (8Mbps)
- 3X 4-channel pulse width modulator (PWM)
- 2X 2-wire Master/Slave (I²C compatible)
- UART (with CTS/RTS and DMA)
- 128-bit AES HW encryption
- 5 x 32 bits, 3 x 24 bits Real Time Counters (RTC)
- Available NFC-A tag interface for OOB pairing
- Certifications:

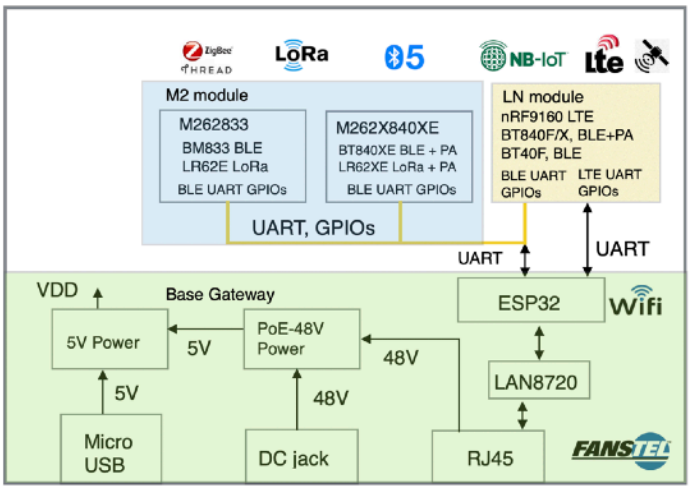

Open Source IoT Gateway supporting multiple radios, multiple networks

- Size: 22x42 mm, B-key
- Operation temperature: -40°C to +85°C

Model Summaries

module	M262833	LR62E
BLE module/Flash/RAM	BM833/512KB/128KB	
Size	22x42mm, B key	10.2x15x1.9mm
GPIO	39	
Antenna BLE/LoRa	PCB/u.FL	u.FL
Range between 2 modules		50 Km, est.
Availability	Sample	Production

Table Of Contents

1. Introduction....3
2. Product Overview....4
Semtech SX1262....4
Mechanical Drawings....5
LR62E Pin Functions....6
LR62E Pin Functions....6
M262833 Pin Functions....7
3. Evaluation Board....9
Loading Firmware into Evaluation Board Through a Nordic DK....10
Nordic Development Environment....10
Download and set up Basic Software tools for EV-LR62E....10
Schematics and Source codes....11
M262833 M.2 M.2 Module Schematics....12
Evaluation Board EV-LR62E Schematics....13
4. Miscellaneous....15
Soldering Temperature-Time Profile for Re-Flow Soldering....15
Cautions, Design Notes, and Installation Notes....15
Packaging....18
FCC Label....18
5. Revision History....19
6. Contact Us....20

1. Introduction

LR62E LoRa module with Semtech SX1262 transceiver are ideal for long range wireless applications. It can be paired with BM833 BLE module in LoRa sensor or beacon design. A smart phone can set up sensor or beacon easily through Bluetooth interface.

BM833 is powerful, highly flexible, ultra low power Bluetooth Low Energy (BLE) modules using Nordic nRF52833 SoCs. With an ARM Cortex™ M4F MCU, available 512KB flash, 128KB RAM, embedded 2.4GHz multi-protocol transceiver, and an integrated antenna, it allows faster time to market with reduced development cost.

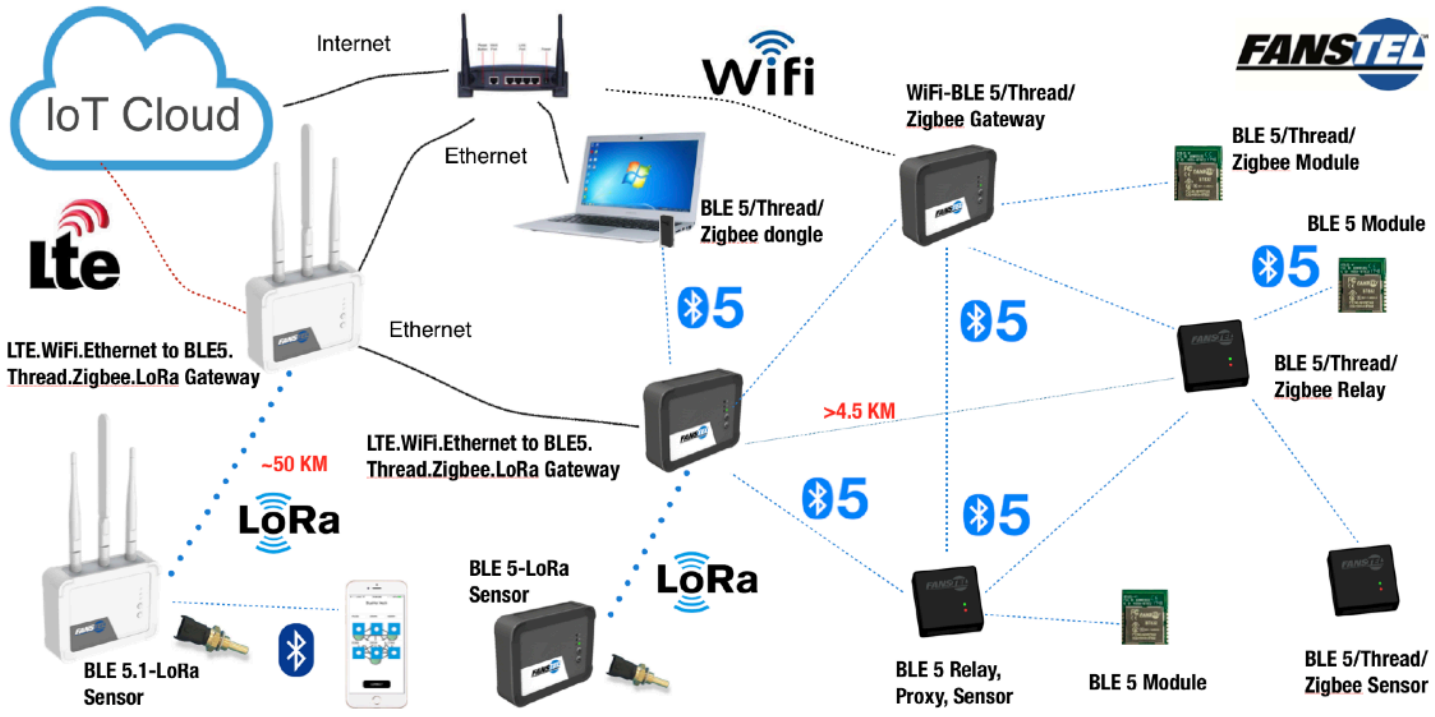

The second application example is in a gateway for connecting to cloud server. A LoRa sensor or beacon can be connected to a cloud server through Ethernet, WiFi, or LTE network.

It is possible to port LoRaWAN™ stacks to Nordic nRF52 BLE SoCs. LoRaWAN™ stacks are not available from Fanstel.

2. Product Overview

Semtech SX1262

Semtech SX1262 data sheets can be downloaded from this webpage.

https://www.fanstel.com/wirelessdocument

A block diagram is below.

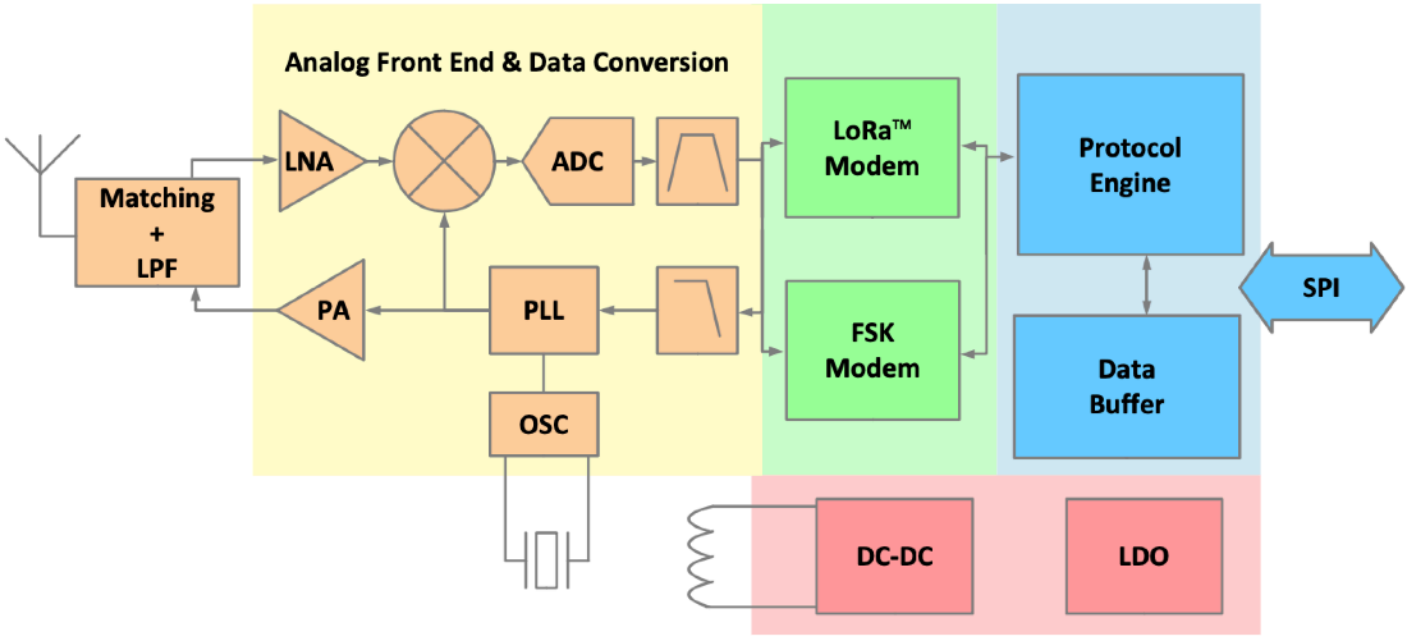

LR62E module has an u.FL connector for external antenna. In application example, a BM833 BLE module with Cortex M4F MCU manages LR62E through SPI interface.

Mechanical Drawings

The followings are mechanical drawings of LR62E, top view. Size of module is 10.2x15.0x1.9mm.

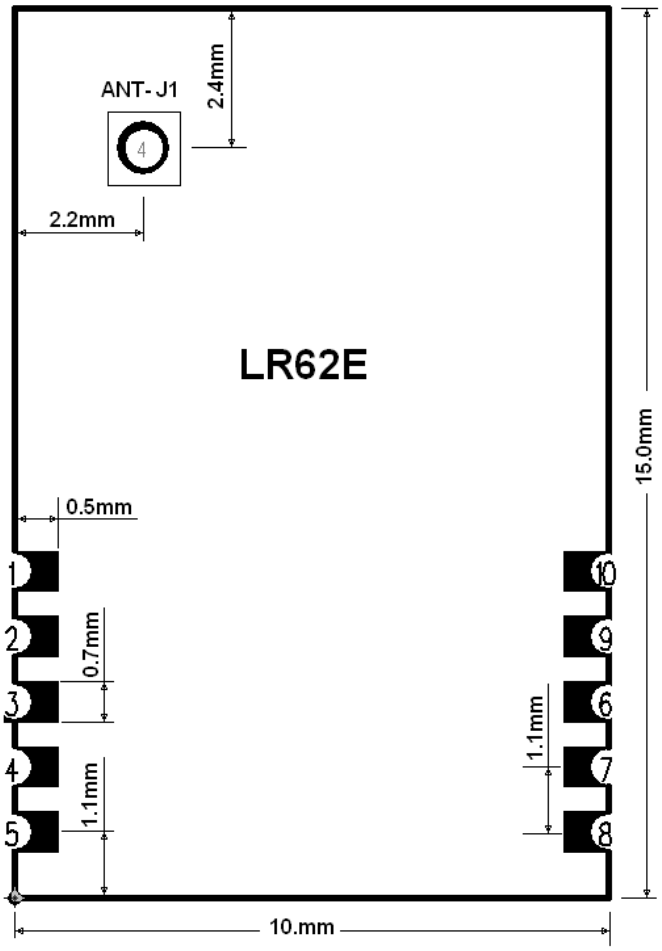

Library components for PADS and EAGLE can be downloaded from

http://www.fanstel.com/download-document/

For other PCB layout tools, please download evaluation Gerber files and extract library component.

LR62E Pin Functions

The followings are LR62E pin assignment. Pin functions are in a table below. Please refer to Semtech SX1262 Product Specifications for detailed descriptions and features supported. It can be downloaded from:

https://www.fanstel.com/wirelessdocument

LR62E Pin Functions

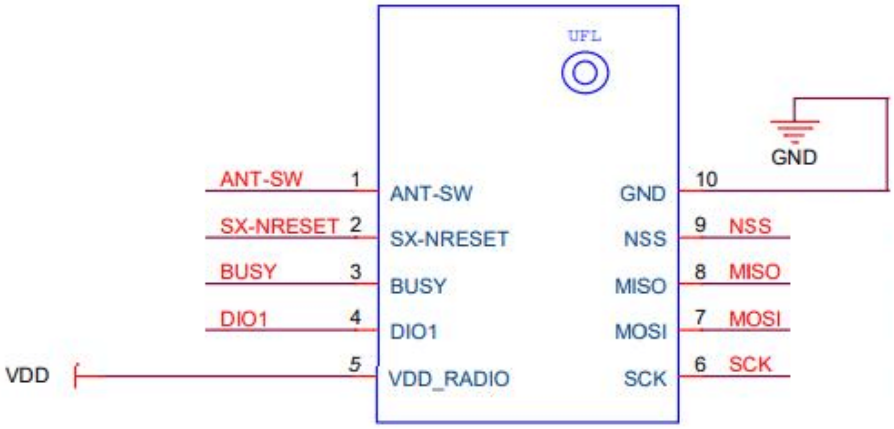

LR62E		SX1262	
pin#	pin name	pin#	Descriptions
1	ANT-SW		Antenna switch
2	SX-NRESET	15	Reset signal, active low
3	BUSY	14	Busy indicator
4	DIO1	13	Multiple purpose Digital IO
5	VDD	1	DC input voltage, 1.8V to 3.7V
6	SCK	18	SPI clock
7	MOSI	17	SPI Slave input
8	MISO	16	SPI Slave Output
9	NSS	19	SPI Slave Select
10	GND	20	Ground

M262833 Pin Functions

M.2	nRF52833	BM833	M262833	
pin#	pin#	pin#	Name	Descriptions
1				DC input for 3.3V regulator; 3.2V to 15V. 4.35V minimum if connected to USB VBUS externally
2	Y2	56	BLE-VDDH	High voltage input for nRF52833, 2.5V to 5.5V
3				DC input for 3.3V regulator; 3.2V to 15V. 4.35V minimum if connected to USB VBUS externally
4	B1	14	VDD-3V3	Regulated 3.3V DC input, 300 mA minimum
5	AD2	58	USB-VBUS	USB power supply, 4.35V to 5.5V.
6	B1	14	VDD-3V3	Regulated 3.3V DC input, 300 mA minimum
7	AD6	67	USB DP	USB data pin
8	AD24	42	BLE-SWDCLK	Serial Wire Debug clock input for BLE
9	AD4	68	USB DN	USB data pin
10	AC24	43	BLE-SWDIO	Serial Wire Debug data for BLE
11	B7	1	GND	Ground
12				
13				
14				
15				
16				
17				
18				
19				
20			GND	Ground
21	T2	34	P011	BLE GPIO
22			GND	Ground
23	AD22	38	P100	BLE GPIO
24	AD8	41	P013	BLE GPIO
25	U1	64	P012	BLE GPIO
26	Y23	31	P101	BLE_UART RXD
27	R1	52	P109	BLE GPIO
28	AC13	40	P018/RESET	Reset or P018
29	AC17	60	P021	No Connect
30	AC9	33	P014	No Connect
31	B17	53	P023	No Connect
32	AC11	36	P016	BLE-OTA
33	AD20	47	P024	No Connect
34	A14	48	P019	BLE GPIO
35	W24	32	P102	BLE_UART-TXD
36	AD10	35	P015	No Connect
37	AD18	44	P022	No Connect
38	AD12	37	P017	BLE GPIO
39	N1	27	P008	BLE GPIO
40	AD16	62	P020	No Connect

41	L1	25	P006	BLE GPIO
42	A8	12	P031	BLE GPIO
43	P2	54	P108	BLE GPIO
44	B9	11	P030	BLE GPIO, analog input
45	M2	24	P007	BLE GPIO
46				No Connect
47	K2	23	P005	BLE GPIO, analog input
48				No Connect
49	J1	21	P004	BLE GPIO, analog input
50				No Connect
51	A10	10	P029	BLE GPIO, analog input
52				No Connect
53	B11	9	P028	BLE GPIO, analog input
54				No Connect
55	G1	7	P026	BLE_I2C, SDA
56				No Connect
57	H2	8	P027	BLE_I2C, SCL
58				No Connect
59	J24	29	P010	BLE_GPIO, NFC2
60				No Connect
61	L24	26	P009	BLE_GPIO, NFC1
62				No Connect
63	B13	20	P003	BLE_GPIO, AIN1
64				No Connect
65	A12	22	P002	BLE_GPIO, AIN 0
66				No Connect
67	P23	66	P107	BLE GPIO
68				No Connect
69	R24	65	P106	BLE GPIO
70				No Connect
71	A16	51	P105	BLE GPIO
72				No Connect
73	U24	61	P104	BLE GPIO
74				No Connect
75	B15	49	P103	BLE GPIO

3. Evaluation Board

An evaluation board can be used to evaluate performance of module and to develop and test your firmware before an application-specific host board is developed. An EV-LR62E include the followings:

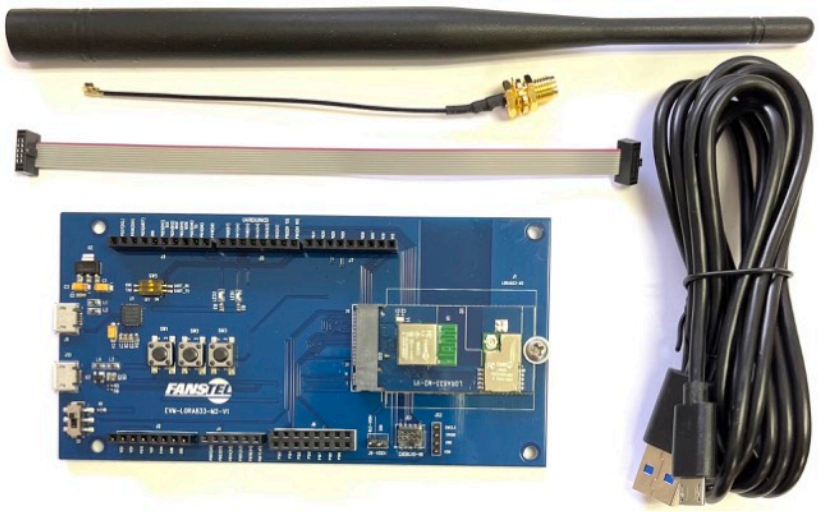

- An EV board with M262833, LR62E + BM833 module INSTALLED.
- A 10-pins flat cable.
- An USB cable
- A 915 MHz LoRa antenna.
- An u.FL to SMA adapter cable.

Loading Firmware into Evaluation Board Through a Nordic DK

To program BM833 BLE module.

- Connect Nordic nRF52840DK **debug out** to Fanstel evaluation board **debug in** using the 10-pin flat cable as shown below.

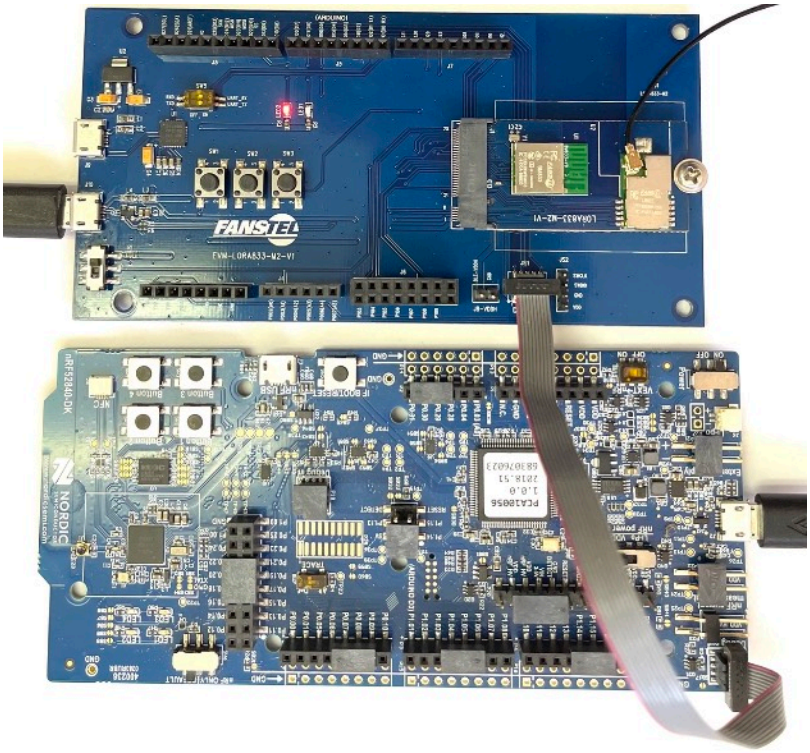

- Connect Nordic nRF52DK to PC.
- Connect a DC power source to micro or mini USB port of evaluation board.

Nordic Development Environment

Nordic Semiconductor provides a complete range of hardware and software development tools for the nRF52 Series devices. nRF52DK or nRF52840DK board is recommended for firmware development. Document and Software development tools can be downloaded by the following links.

Get started with Nordic chip and all online documents.

http://infocenter.nordicsemi.com/index.jsp?topic=/com.nordic.infocenter.nrf52/dita/nrf52/development/nrf52_dev_kit.html&cp=1_1

Nordic SDK with many example projects.

https://developer.nordicsemi.com/nRF5_SDK/

Nordic development zone.

https://devzone.nordicsemi.com/tutorials/b/getting-started/posts/development-with-gcc-and-eclipse

Download and set up Basic Software tools for EV-LR62E

nRF command line tool 10.2.1 or newer.
https://www.nordicsemi.com/Software-and-Tools/Development-Tools/nRF-Command-Line-Tools/Download

nRF Connect desktop 3.2.0 or newer.
https://www.nordicsemi.com/Software-and-Tools/Development-Tools/nRF-Connect-for-desktop

Schematics and Source codes

M262833 module schematics, EV abord schematics, hex codes, and source codes can be downloaded from this web page.

https://www.fanstel.com/wirelessdocument

M262833 M.2 M.2 Module Schematics

The following is the schematics of M.2 module, M262833. It can be used as a reference design if you use an LR62E and a BM833 on you host PCB. The 32.768 kHz crystal, Y1 and load capacitors are required to provide precise sleep clock during powered down.

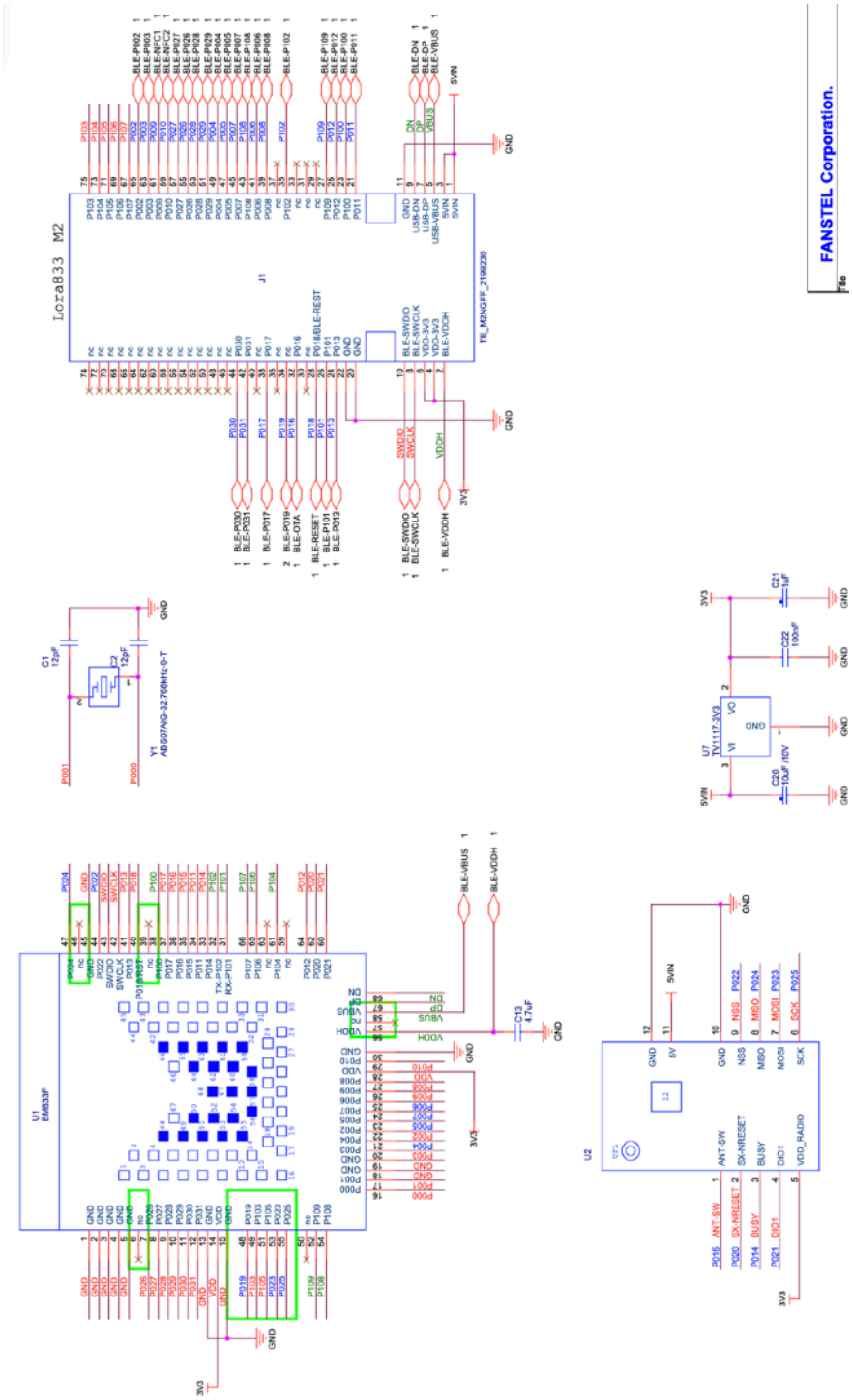

Evaluation Board EV-LR62E Schematics

The following is schematics of EV-LR62E.

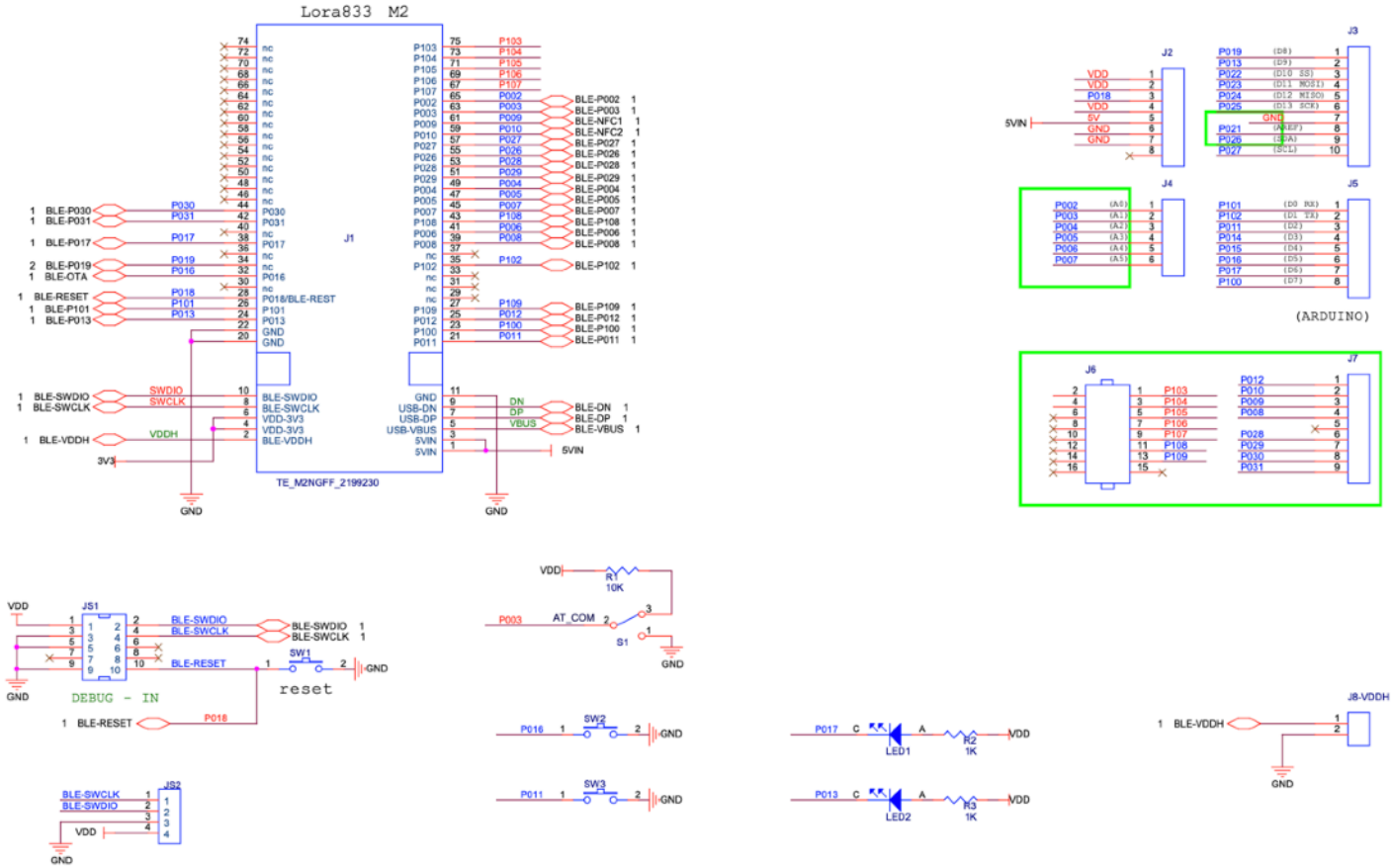

The following is the USB interface circuit of EV-LR62E

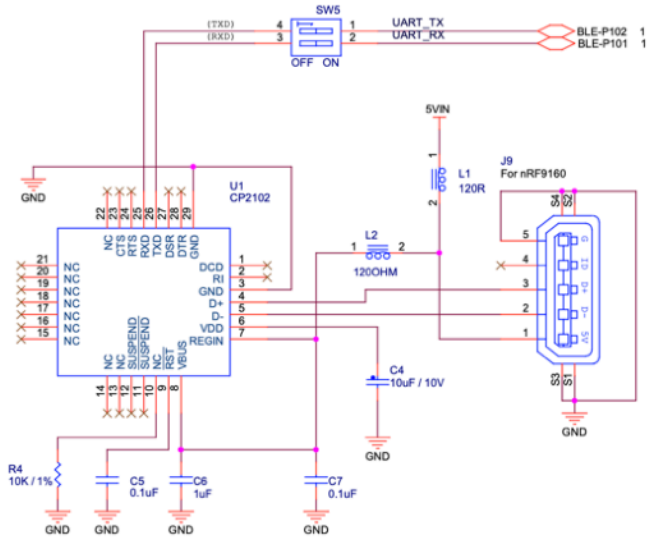

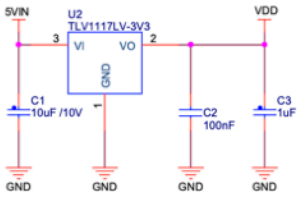

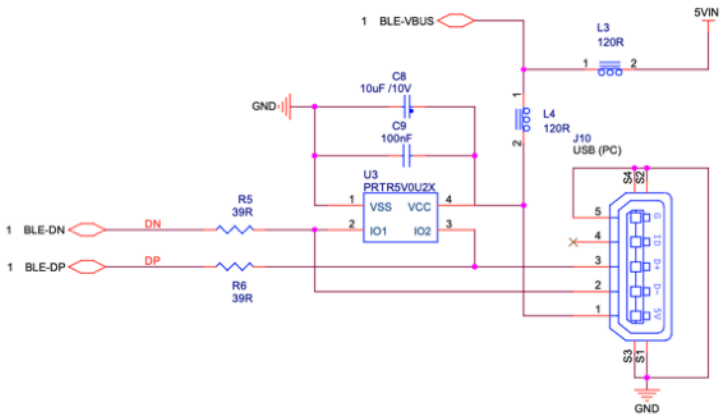

4. Miscellaneous

Soldering Temperature-Time Profile for Re-Flow Soldering

Maximum number of cycles for re-flow is 2. No opposite side re-flow is allowed due to module weight.

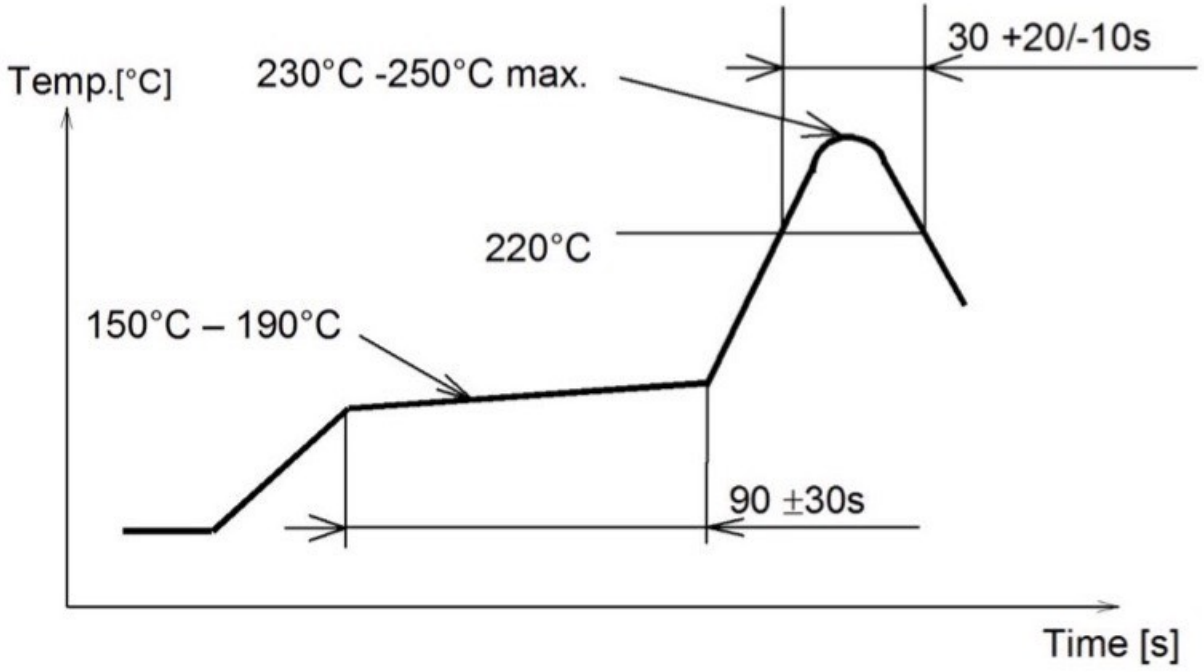

Cautions, Design Notes, and Installation Notes

Failure to follow the guidelines set forth in this document may result in degrading of the product's functions and damage to the product.

Design Notes

(1) Follow the conditions written in this specification, especially the control signals of this module.

(2) The supply voltage has to be free of AC ripple voltage (for example from a battery or a low noise regulator output). For noisy supply voltages, provide a decoupling circuit (for example a ferrite in series connection and a bypass capacitor to ground of at least 47uF directly at the module).

(3) This product should not be mechanically stressed when installed.

(4) Keep this product away from heat. Heat is the major cause of decreasing the life of these products.

(5) Avoid assembly and use of the target equipment in conditions where the products' temperature may exceed the maximum tolerance.

(6) The supply voltage should not be exceedingly high or reversed. It should not carry noise and/or spikes.

(7) this product away from other high frequency circuits.

Notes on Antenna and PCB Layout

(1) Don't use a module with internal antenna inside a metal case.

(2) For PCB layout:

- Avoid running any signal line below module whenever possible,
- No ground plane below antenna,
- If possible, cut-off the portion of main board PCB below antenna.

Installation Notes

(1) Reflow soldering is possible twice based on the time-temperature profile in this data sheets. Set up the temperature at the soldering portion of this product according to this reflow profile.

(2) Carefully position the products so that their heat will not burn into printed circuit boards or affect the other components that are susceptible to heat.

(3) Carefully locate these products so that their temperatures will not increase due to the effects of heat generated by neighboring components.

(4) If a vinyl-covered wire comes into contact with the products, then the cover will melt and generate toxic gas, damaging the insulation. Never allow contact between the cover and these products to occur.

(5) This product should not be mechanically stressed or vibrated when reflowed.

(6) If you want to repair your board by hand soldering, please keep the conditions of this chapter.

(7) Do not wash this product.

(8) Refer to the recommended pattern when designing a board.

(9) Pressing on parts of the metal cover or fastening objects to the metal will cause damage to the unit.

(10) For more details on LGA (Land Grid Array) soldering processes refer to the application note.

Usage Condition Notes

(1) Take measures to protect the unit against static electricity. If pulses or other transient loads (a large load applied in a short time) are applied to the products, check and evaluate their operation before assembly on the final products.

(2) Do not use dropped products.

(3) Do not touch, damage or soil the pins.

(4) Follow the recommended condition ratings about the power supply applied to this product.

(5) Electrode peeling strength: Do not add pressure of more than 4.9N when soldered on PCB

(6) Pressing on parts of the metal cover or fastening objects to the metal cover will cause damage.

(7) These products are intended for general purpose and standard use in general electronic equipment, such as home appliances, office equipment, information and communication equipment.

Storage Notes

(1) The module should not be stressed mechanically during storage.

(2) Do not store these products in the following conditions or the performance characteristics of the product, such as RF performance will be adversely affected:

- Storage in salty air or in an environment with a high concentration of corrosive gas.
- Storage in direct sunlight
- Storage in an environment where the temperature may be outside the range specified.
- Storage of the products for more than one year after the date of delivery storage period.

(3) Keep this product away from water, poisonous gas and corrosive gas.

(4) This product should not be stressed or shocked when transported.

(5) Follow the specification when stacking packed crates (max. 10).

Safety Conditions

These specifications are intended to preserve the quality assurance of products and individual components. Before use, check and evaluate the operation when mounted on your products. Abide by these specifications, without deviation when using the products. These products may short-circuit. If electrical shocks, smoke, fire, and/or accidents involving human life are anticipated when a short circuit occurs, then provide the following failsafe functions, as a minimum.

(1)Ensure the safety of the whole system by installing a protection circuit and a protection device.

(2)Ensure the safety of the whole system by installing a redundant circuit or another system to prevent a dual fault causing an unsafe status.

Other Cautions

(1)This specification sheet is copyrighted. Reproduction of this data sheets is permissible only if reproduction is without alteration and is accompanied by all associated warranties, conditions, limitations, and notices.

(2)Do not use the products for other purposes than those listed.

(3)Be sure to provide an appropriate failsafe function on your product to prevent an additional damage that may be caused by the abnormal function or the failure of the product.

(4)This product has been manufactured without any ozone chemical controlled under the Montreal Protocol.

(5)These products are not intended for other uses, other than under the special conditions shown below. Before using these products under such special conditions, check their performance and reliability under the said special conditions carefully to determine whether or not they can be used in such a manner.

- In liquid, such as water, salt water, oil, alkali, or organic solvent, or in places where liquid may splash.
- In direct sunlight, outdoors, or in a dusty environment
- In an environment where condensation occurs.
- In an environment with a high concentration of harmful gas.

(6) If an abnormal voltage is applied due to a problem occurring in other components or circuits, replace these products with new products because they may not be able to provide normal performance even if their electronic characteristics and appearances appear satisfactory.

(7) When you have any question or uncertainty, contact Fanstel.

Packaging

Production modules are delivered in reel, 1000 modules in each reel.

FCC Label

The Original Equipment Manufacturer (OEM) must ensure that the OEM modular transmitter must be labeled with its own FCC ID number. This includes a clearly visible label on the outside of the final product enclosure that displays the contents shown below. If the FCC ID is not visible when the equipment is installed inside another device, then the outside of the device into which the equipment is installed must also display a label referring to the enclosed equipment

The end product with this module may subject to perform FCC part 15 unintentional emission test requirement and be properly authorized.

This device is intended for OEM integrator only.

5. Revision History

- July 2020, Ver. 0.90: The first draft copy
- Feb. 2021, Ver. 1.00: The first release.
- June 2021, Ver. 1.01: Update mode photo.

6. Contact Us

United States:

Fanstel Corp.
7466 E. Monte Cristo Ave. Scottsdale AZ 85260
Tel. 1 480-948-4928
Fax. 1-480-948-5459
Email: info@fanstel.com
Website: www.fanstel.com

Taiwan:

Fanstel Corp.
10F-10, 79 Xintai Wu Road
Xizhu, New Taipei City, Taiwan 22101
泛世公司
臺灣省新北市汐止區新臺五路79號10樓之10, 22101
Tel. 886-2-2698-9328
Fax. 886-2-2698-4813
Email: info@fanstel.com
Website: www.fanstel.com

China:

Fanstel Technologies Corp.
11 Jiale Street
Ping-Dih, Long-Gang, Shen Zhen, GD 518117
泛世康科技(深圳)有限公司
廣東省深圳市龍崗區坪地鎮佳樂街11號
Tel. 86-755-8409-0928
Fax. 86-755-8409-0973
QQ. 3076221086
Email: info@fanstel.com
Website: www.fanstel.com