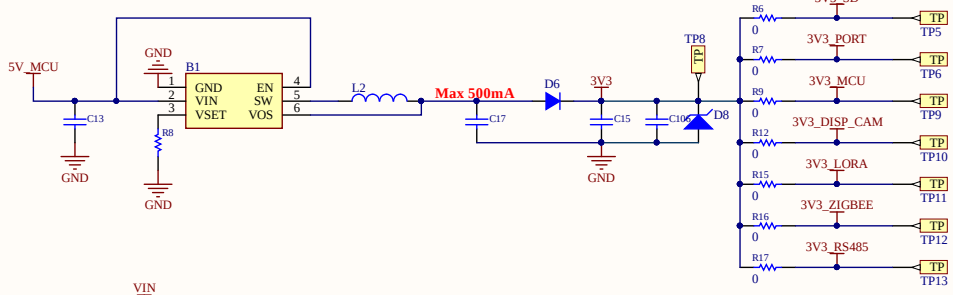

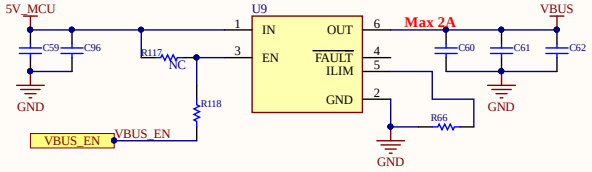

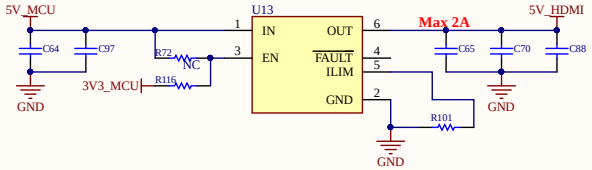

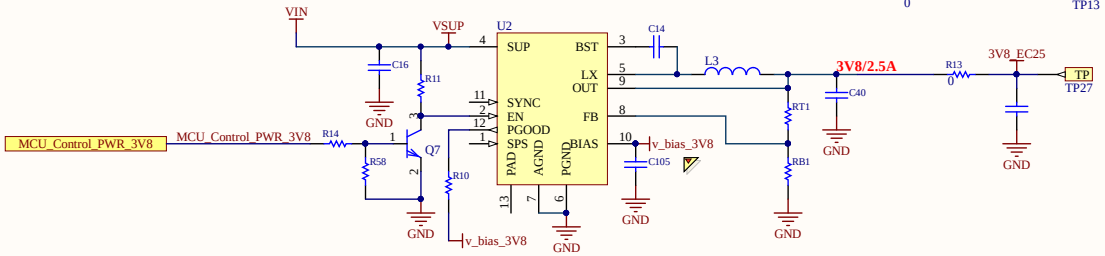

Title		
Industrial IoT Gateway Base Board for Pi CM5		
Size: A	Number: Power Supply	Revision: Rev 2.0
Date: 3/27/2026		Sheet of
File: D:\FirmwareGit\..\POWER.SchDoc		Drawn By:

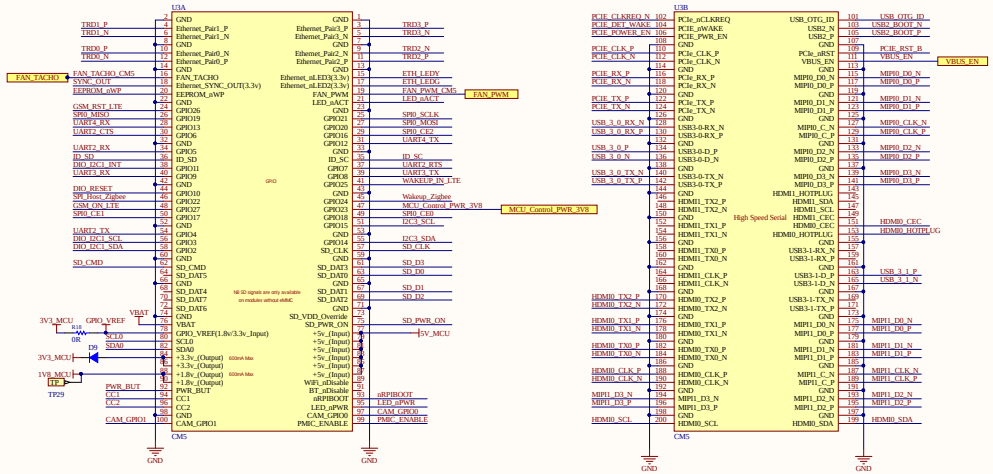

GPIO	Function	Mode	Note
2	I2C1	DIO EX	
3	I2C1		
4	UART2_TX	ZIGBEE	
5	UART2_RX		
6	UART2_CTS		
7	UART2_RST		
8	UART3_TX	RS485	
9	UART3_RX		
10	GPIO		DIO_RST
11	GPIO		DIO_INT
12	UART4_TX	Expansion	LORA_EX
13	UART4_RX		LORA_EX
14	I2C3	Expansion	
15	I2C3		
16	SPI1_CSn[2]	Expansion	
17	SPI1_CSn[1]	LORA	
18	SPI1_CSn[0]	ZIGBEE	
19	SPI1_MISO		
20	SPI1_MOSI		
21	SPI1_SCLK		
22	GPIO		SPI_Host_Zigbee
23	GPIO	POWER	MCU_Control_PWR_3V8
24	GPIO	ZIGBEE	Wakeup_Zigbee
25	GPIO	LTE	WAKEUP_IN_LTE
26	GPIO		GSM_RST_LTE
27	GPIO		GSM_ON_LTE

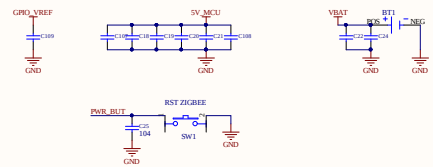

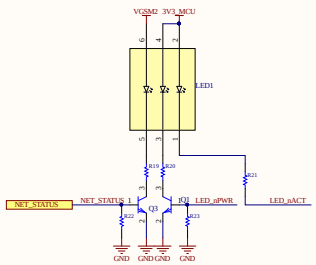

Operating system boot guide
Jump Boot = GND
Lock EEPROM for protection = GND

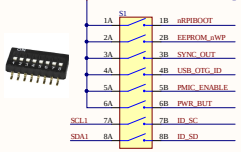

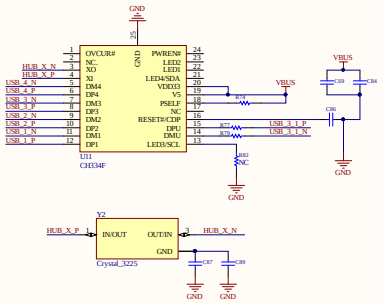

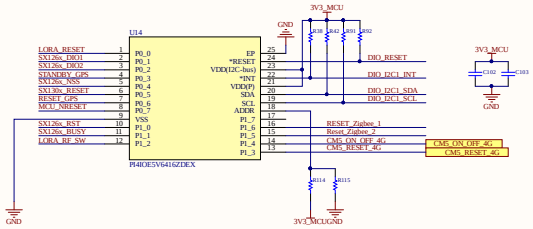

Title	Industrial IoT Gateway Base Board for Pi CM5	
Size A2	Number Pi CM5 Connector	Revision Rev 2.0
Date: 3/27/2026	Sheet of	
File: D:/FirmwareGit..\CM5.SchDoc	Drawn By:	

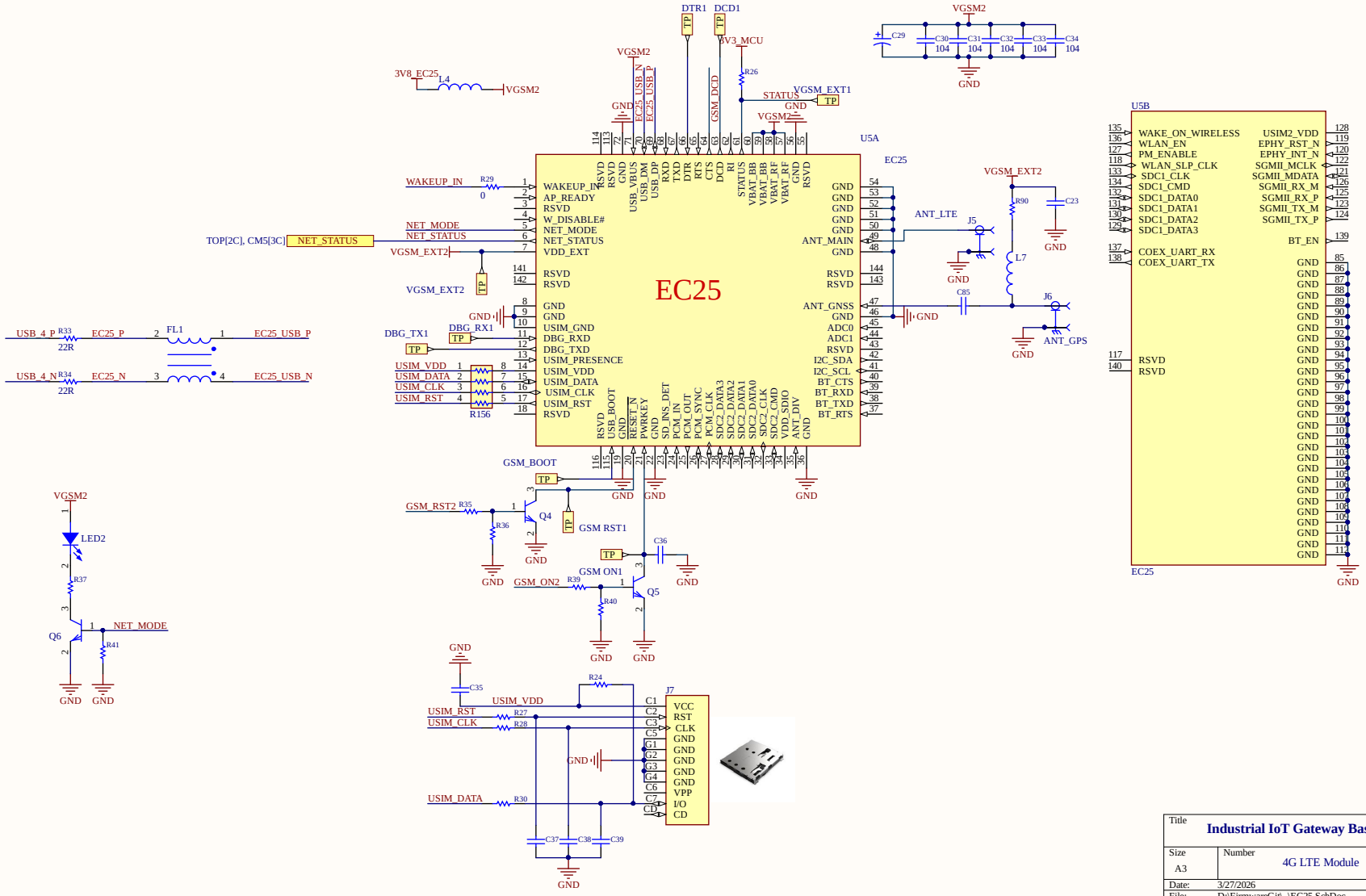

Title		
Industrial IoT Gateway Base Board for Pi CM5		
Size: A3	Number: 4G LTE Module	Revision: Rev 2.0
Date: 3/27/2026		Sheet of
File: D:\FirmwareGit\..\EC25.SchDoc		Drawn By:

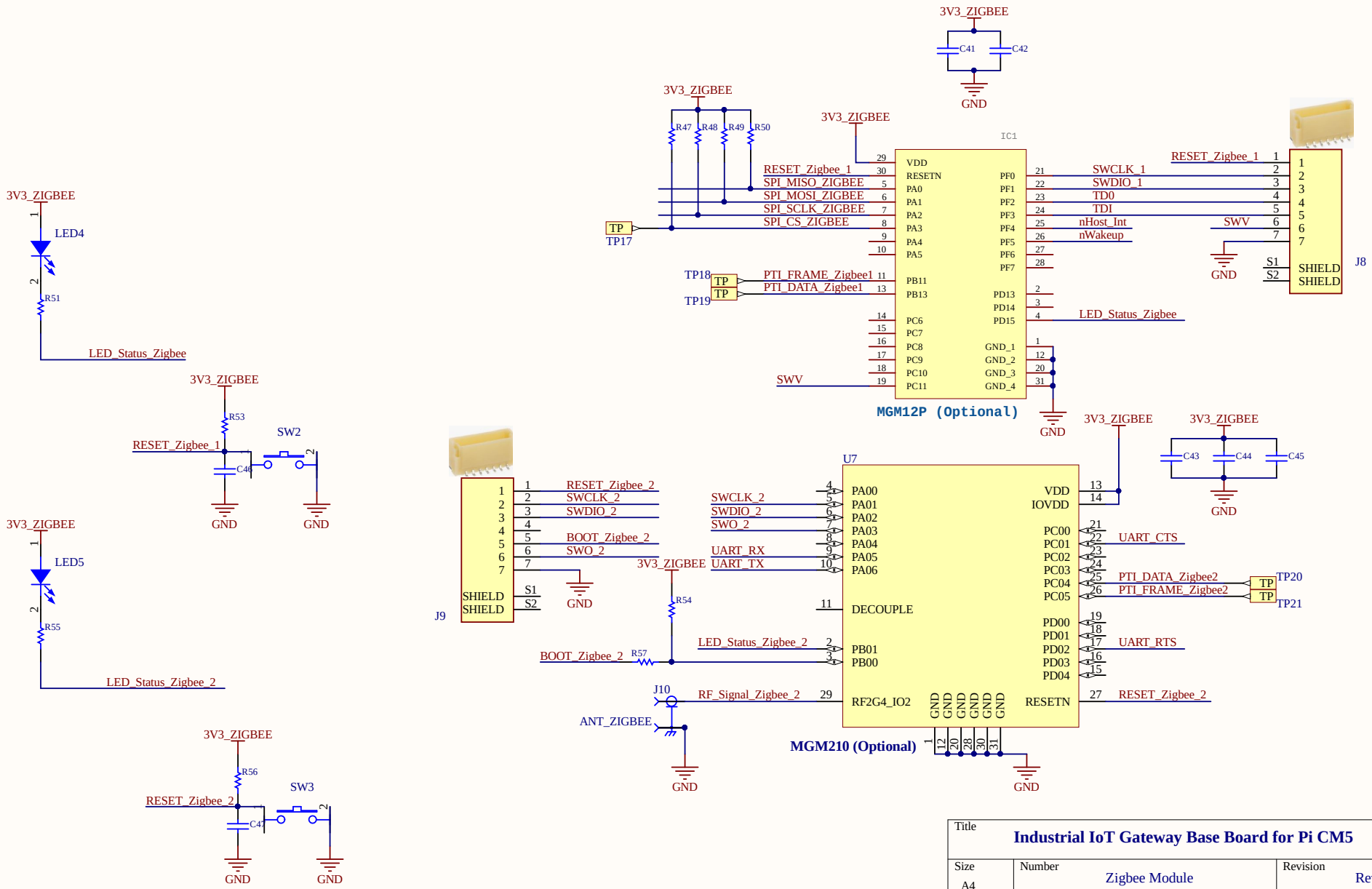

Title	**Industrial IoT Gateway Base Board for Pi CM5**	
Size A4	Number Zigbee Module	Revision Rev 2.0
Date: 3/27/2026		Sheet of
File: D:\FirmwareGit\..\Zigbee.SchDoc		Drawn By:

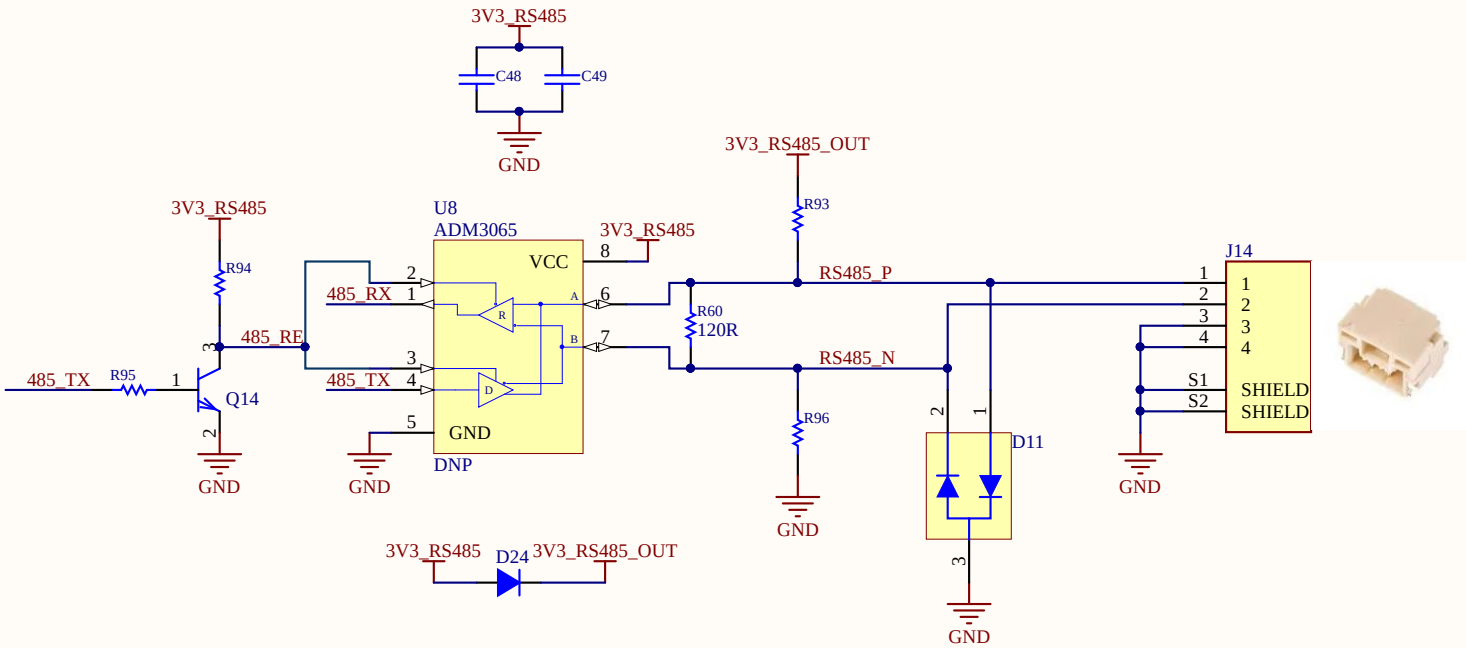

Title	Industrial IoT Gateway Base Board for Pi CM5	
Size A	Number RS485	Revision Rev 2.0
Date: 3/27/2026		Sheet of
File: D:\FirmwareGit\..\RS485.SchDoc		Drawn By:

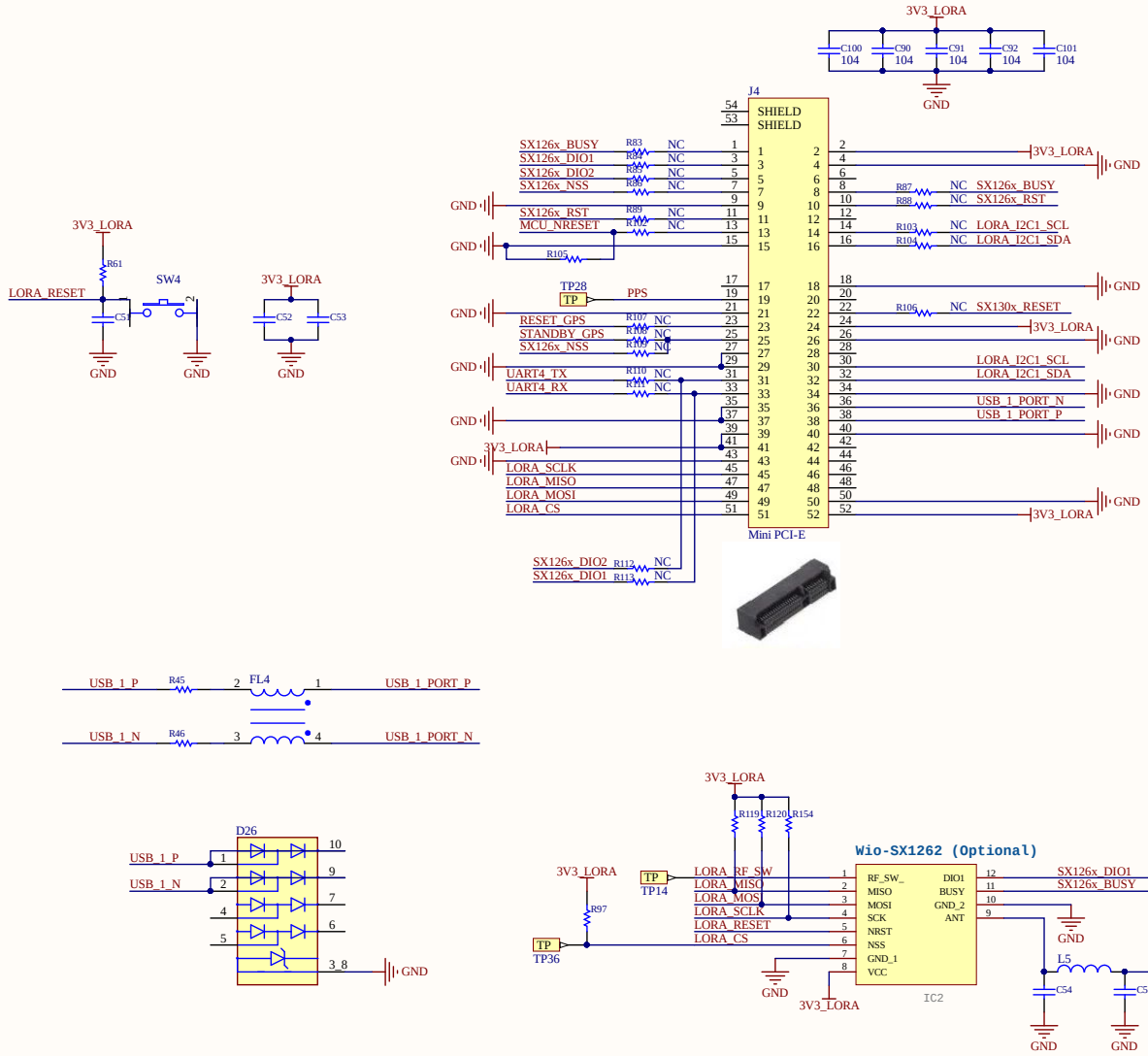

Pin No.	RAK5146 Pin	WM1302 Pin			
1	SX1261_BUSY	NC	27	GND	GND
2	3V3	3V3	28	GPIO(8)	NC
3	SX1261_DIO1	NC	29	GND	GND
4	GND	GND	30	I2C_SCL	I2C_SCL
5	SX1261_DIO2	NC	31	PI_UART_TX	SX1262_IO2
6	GPIO(6)	NC	32	I2C_SDA	I2C_SDA
7	SX1261_NSS	NC	33	PI_UART_RX	SX1262_IO1
8	NC	SX1262_BUSY	34	GND	GND
9	GND	GND	35	GND	GND
10	NC	SX1262_RST	36	USB_DM	USB_D-
11	SX1261_NRESET	NC	37	GND	GND
12	NC	NC	38	USB_DP	USB_D+
13	MCU_NRESET	NC	39	3V3	3V3
14	NC	I2C_SCL	40	GND	GND
15	GND	GND	41	3V3	3V3
16	NC	I2C_SDA	42	NC	NC
17	NC	NC	43	GND	GND
18	GND	GND	44	NC	NC
19	PPS	1PPS	45	HOST_SCK	SPI_SCK
20	NC	NC	46	NC	NC
21	GND	GND	47	HOST_MISO	SPI_MISO
22	SX1303_RESET	RESET	48	NC	NC
23	RESET_GPS	NC	49	HOST_MOSI	SPI_MOSI
24	3v3	3V3	50	GND	GND
25	STANDBY_GPS	SX1262_CSN	51	HOST_CSN	SX1302_CSN
26	GND	GND	52	3V3	3V3

Title	**Industrial IoT Gateway Base Board for Pi CM5**	
Size A	Number LORA Module	Revision Rev 2.0
Date: 3/27/2026	Sheet of	
File: D:\FirmwareGit\..\LORA.SchDoc	Drawn By:	

PCIEx1 + DISP/CAMx2

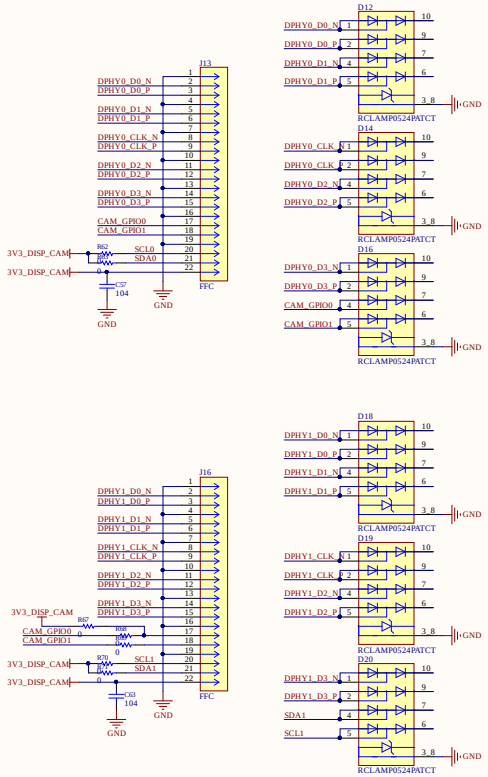

USB TYPE C x 1

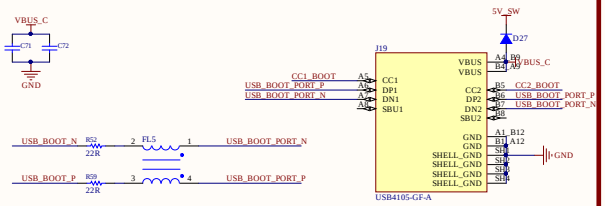

ETHERNET x 1

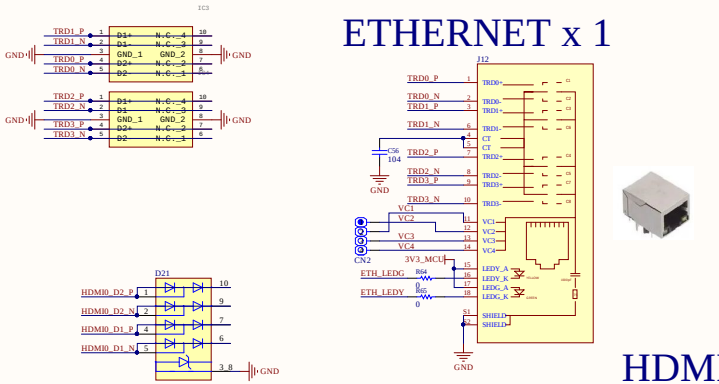

HDMI x 1

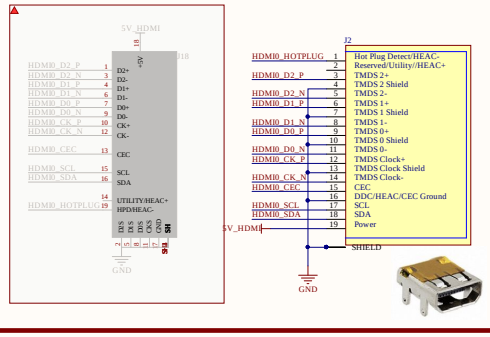

Expansion

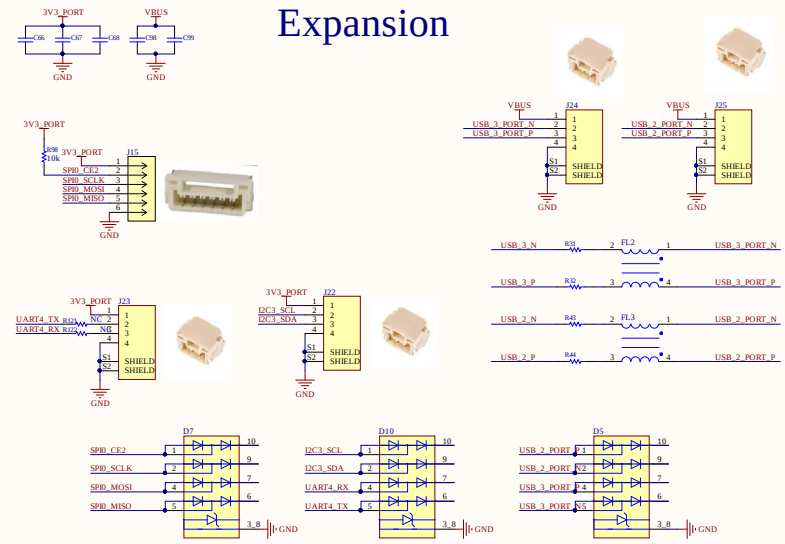

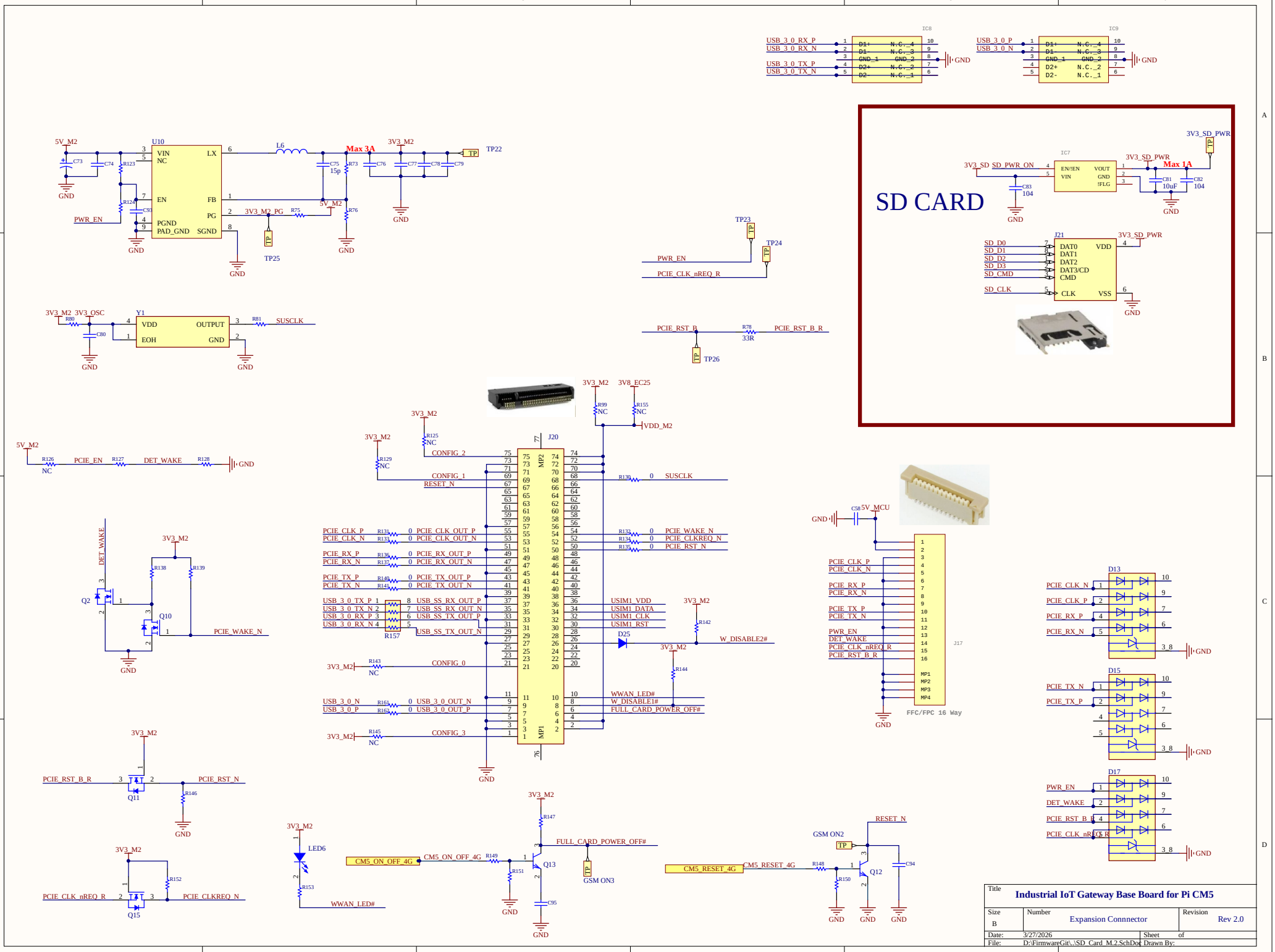
SD CARD
U10
VIN
NC
LX
EN
FB
PG
PGND
PAD_GND
SGND
Max 3A
L6
5V_M2
3V3_M2
TP22
TP25
PWR_EN
3V3_M2_PG
Y1
VDD
OUTPUT
EOH
GND
3V3_OSC
SUSCLK
TP23
TP24
PCIE_CLK_nREQ_R
PCIE_RST_B
PCIE_RST_B_R
TP26
IC8
IC9
USB_3_0_RX_P
USB_3_0_RX_N
USB_3_0_TX_P
USB_3_0_TX_N
USB_3_0_P
USB_3_0_N
IC7
EN/!EN
VIN
VOUT
!FLG
3V3_SD_PWR
3V3_SD_PWR_ON
Max 1A
J21
DAT0
DAT1
DAT2
DAT3/CD
CMD
CLK
VDD
VSS
SD_D0
SD_D1
SD_D2
SD_D3
SD_CMD
SD_CLK
3V8_EC25
VDD_M2
J20
MP2
MP1
CONFIG_2
CONFIG_1
RESET_N
PCIE_EN
DET_WAKE
PCIE_CLK_P
PCIE_CLK_N
PCIE_CLK_OUT_P
PCIE_CLK_OUT_N
PCIE_RX_P
PCIE_RX_N
PCIE_RX_OUT_P
PCIE_RX_OUT_N
PCIE_TX_P
PCIE_TX_N
PCIE_TX_OUT_P
PCIE_TX_OUT_N
USB_3_0_TX_P
USB_3_0_TX_N
USB_3_0_RX_P
USB_3_0_RX_N
USB_SS_RX_OUT_P
USB_SS_RX_OUT_N
USB_SS_TX_OUT_P
USB_SS_TX_OUT_N
USB_3_0_N
USB_3_0_P
USB_3_0_OUT_N
USB_3_0_OUT_P
CONFIG_0
CONFIG_3
USIM1_VDD
USIM1_DATA
USIM1_CLK
USIM1_RST
WWAN_LED#
W_DISABLE1#
FULL_CARD_POWER_OFF#
W_DISABLE2#
PCIE_WAKE_N
PCIE_CLKREQ_N
PCIE_RST_N
PCIE_CLK_nREQ_R
Q2
Q10
Q11
Q15
LED6
Q13
Q12
GSM ON3
GSM ON2
CM5_ON_OFF_4G
CM5_RESET_4G
5V_MCU
J17
FFC/FPC 16 Way
D13
D15
D17
Title
Industrial IoT Gateway Base Board for Pi CM5
Size
B
Number
Expansion Connnector
Revision
Rev 2.0
Date:
3/27/2026
Sheet
of
File:
D:\FirmwareGit\..\SD_Card_M.2.SchDoc
Drawn By: