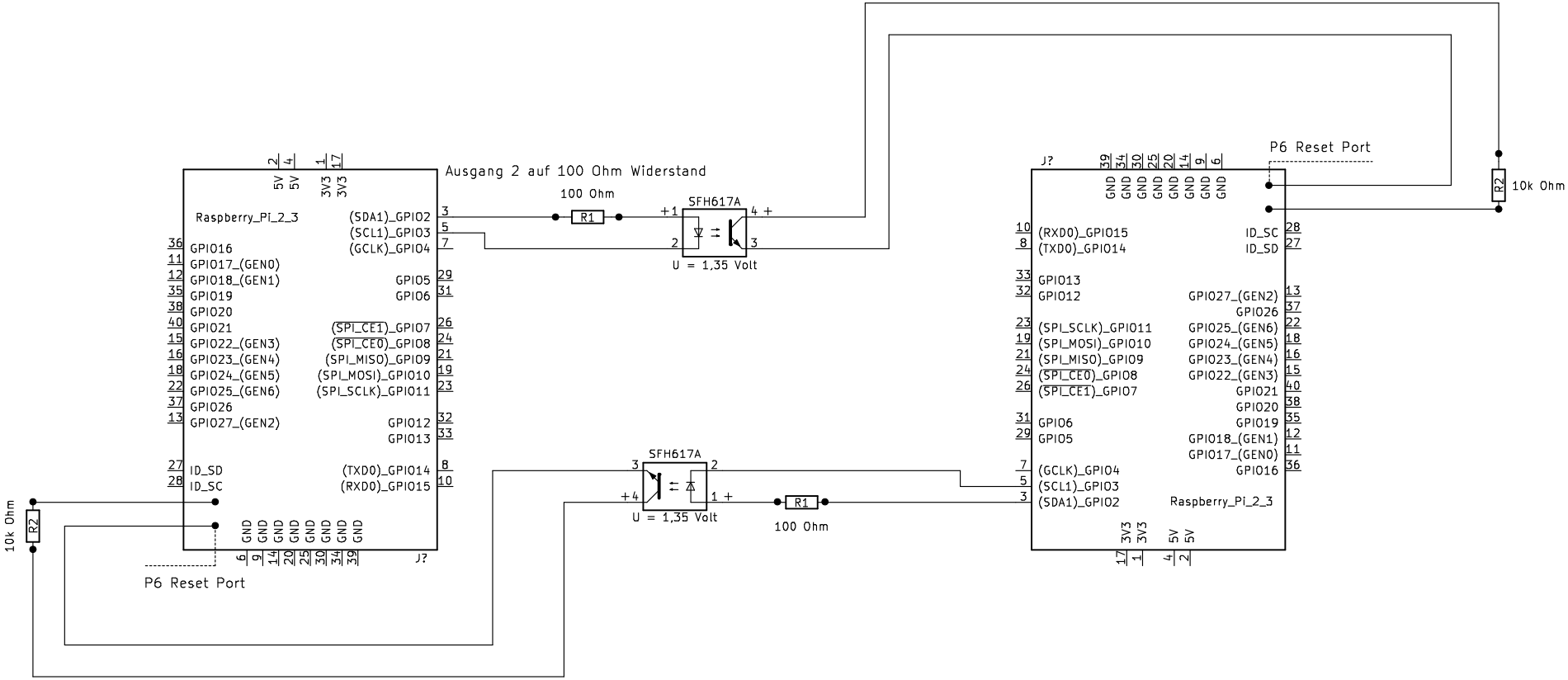


Frankfurt University of Applied Sciences

**Henry-Norbert Cocos**

Sheet: /

File: Reset_pi.sch

***Title: Schaltung Reset Funktion Raspberry Pi***

| | | |
|---|---|---|
| Size: A4 | Date: | **Rev:** |
| KiCad E.D.A. kicad 4.0.7-e2-637658ubuntu16.04.1 | | Id: 1/1 |