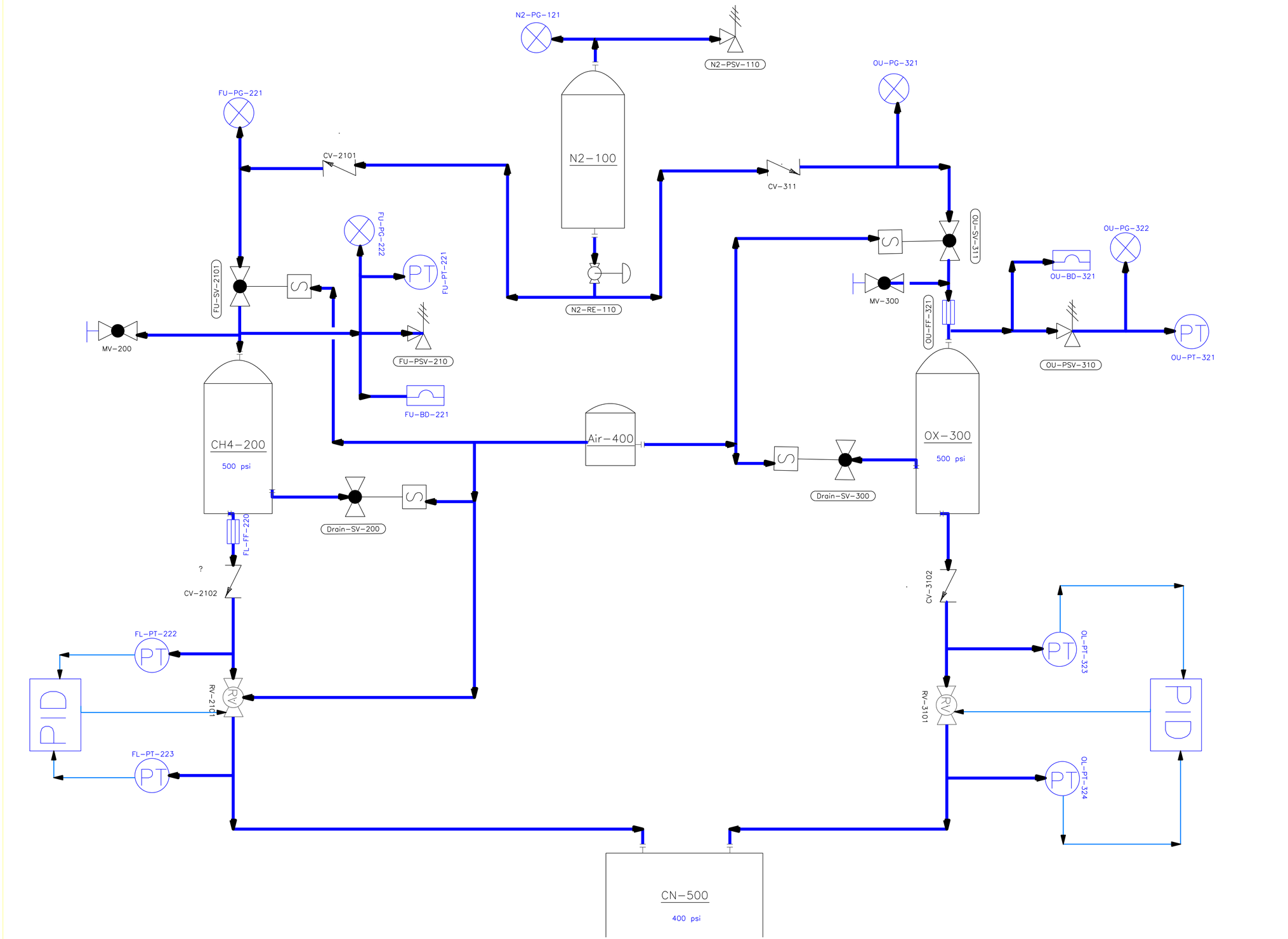

General Notes

No.	Revision/Issue	Date

Drawing Name
DB Propellant Feed
####

Project Name and Address
DBPF
down badder propellant feed

---- ----

Area	Stamp
####	
Drawing Number 01	
Author hieu	

D:\Team-Rocket\DBPF\PID DWG\PropFeed.dwg