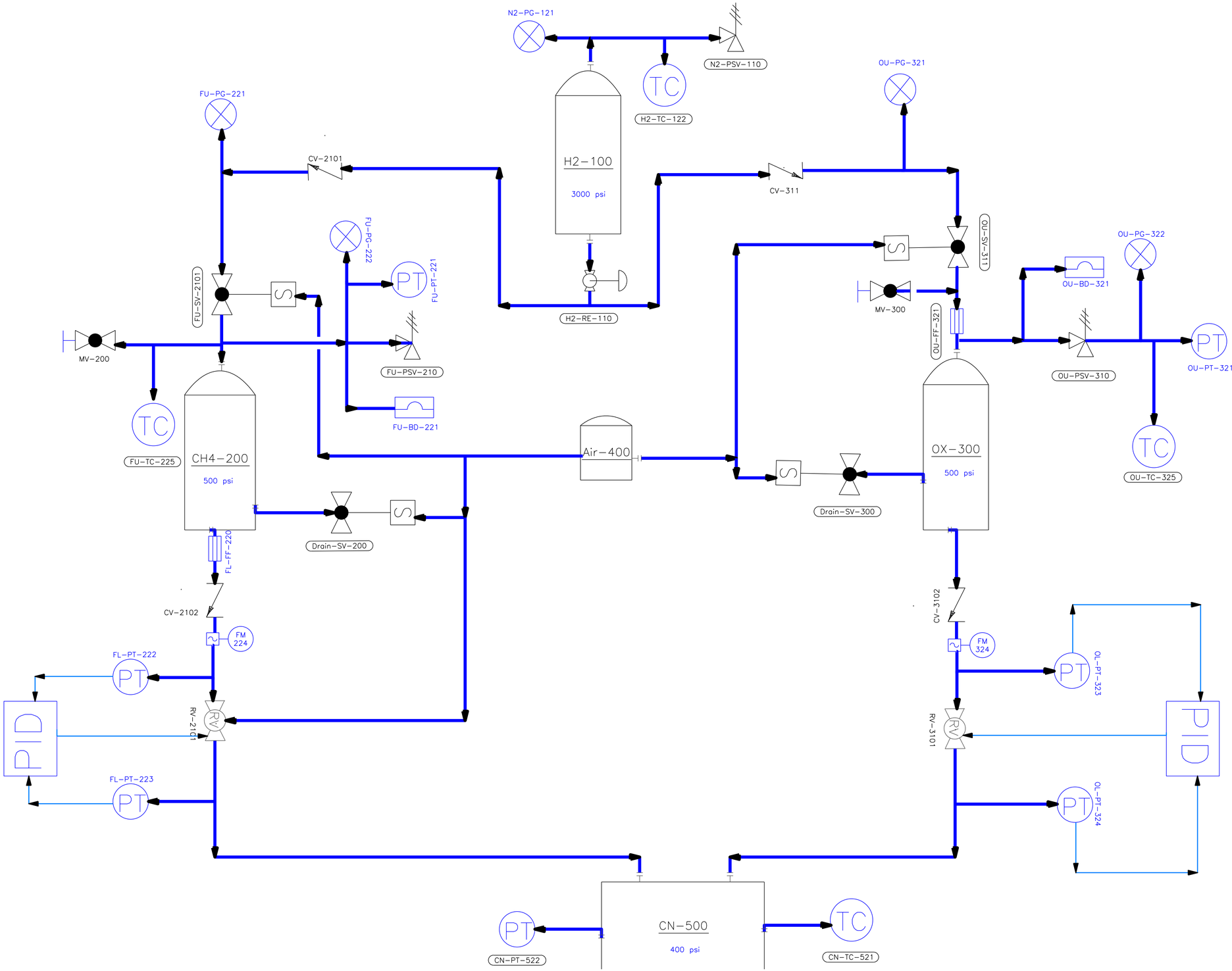

General Notes

No.	Revision/Issue	Date

Drawing Name
DB Propellant Feed

Project Name and Address
DBPF
down badder propellant feed

Area

Stamp

Drawing Number
01

Author
Hieu Bui

D:\Team-Rocket\DBPF\PID DWG\PropFeed.dwg