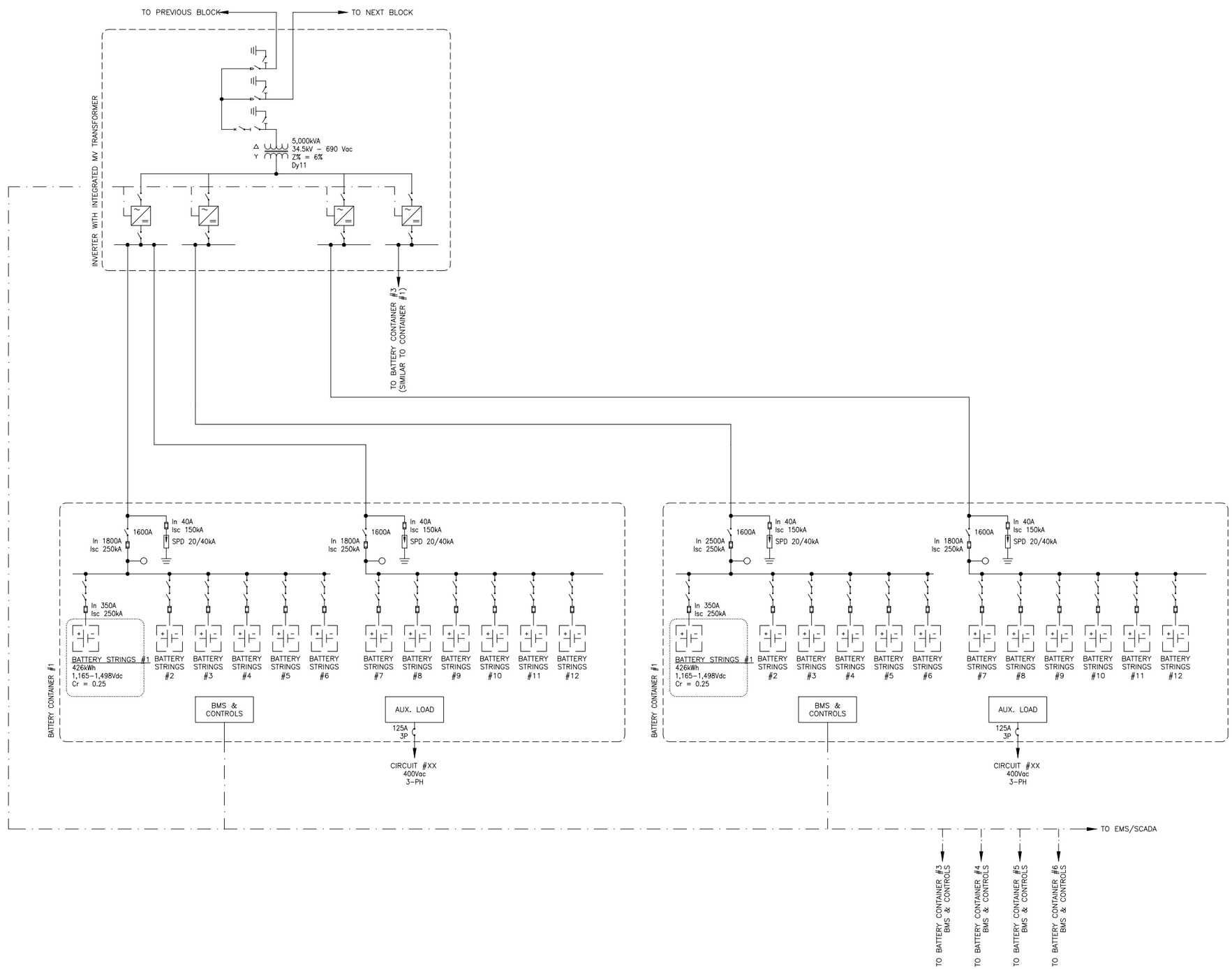

NOTES

1. CUSTOMER TO SIZE AND PROVIDE THE FOLLOWING CABLES:
   - MV FEEDER CABLES
   - AC CABLES FROM AUXILIARY DISTRIBUTION BOARD TO CONTAINERS
   - DC CABLES FROM MAIN DC DISCONNECT TO INVERTERS

REV	DATE	DESCRIPTION	DWN	CHK'D	APP'D
0	26JULY'24	INITIAL DESIGN	ND	HD	HA

PROJECT

TYPICAL BATTERY BLOCK

PREVALON

A Mitsubishi Power Americas and EES Joint Venture

TITLE

TYPICAL BATTERY BLOCK
SINGLE LINE DIAGRAM

EXPORT ADMINISTRATION REGULATIONS WARNING

THIS DOCUMENT CONTAINS TECHNICAL DATA WHICH IF EXPORTED FROM THE UNITED STATES MUST BE EXPORTED IN ACCORDANCE WITH THE EXPORT ADMINISTRATION REGULATIONS. DIVERSION CONTRARY TO U.S. LAW IS PROHIBITED.

CONFIDENTIAL & PROPRIETARY

THIS DOCUMENT CONTAINS COMPANY CONFIDENTIAL AND PROPRIETARY INFORMATION OF PREVALON. NEITHER THIS DOCUMENT, NOR ANY INFORMATION OBTAINED THEREFROM IS TO REPRODUCED, TRANSMITTED, OR DISCLOSED TO ANY THIRD–PARTY WITHOUT FIRST RECEIVING THE EXPRESS WRITTEN AUTHORIZATION OF PREVALON.

© PREVALON, INC. ALL RIGHTS RESERVED

SECURITY LEVEL	EXPORT CLASSIFICATION	REASON FOR CONTROL
SL2	EAR99	–

STATUS	RELEASE DATE
NOT FOR CONSTRUCTION	–

SIZE	SCALE
ANSI D	AS SHOWN

DRAWING NUMBER	REVISION
–	0