REVISIONS				
LTR	DESCRIPTION	DATE	DWN	APVD
A	RELEASED	01Jan16	AW	WK

Note:

1.Material:

1.1 Housing: High temperature thermoplastic with g.f,UL94v-0

1.2 Contact: copper alloy,t=0.20mm

1.3 Shell: copper alloy,t=0.25mm

2.Specification:

2.1 Current rating:1,5PIN 1.8A Max/2,3,4PIN 1A Max.

2.2 Dielectric withstanding voltage: 100 V(ac) for 1 min.

2.3 Contact resistance: 30 mΩ Max.

2.4 Insulation resistance: 100 MΩ Min.

2.5 Total mating force: 3.57 Kgf Max.

2.6 Total unmating force: 1.0 Kgf Min.

2.7 Temperature range: -30°C~80°C

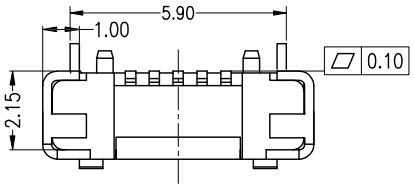

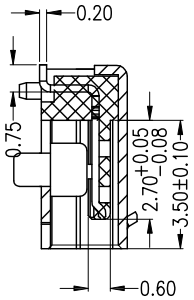

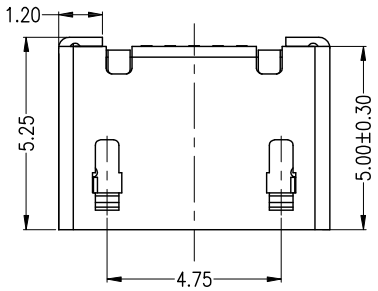

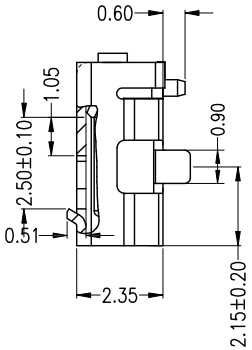

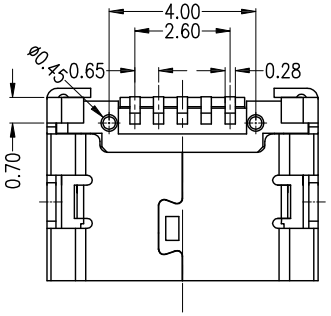

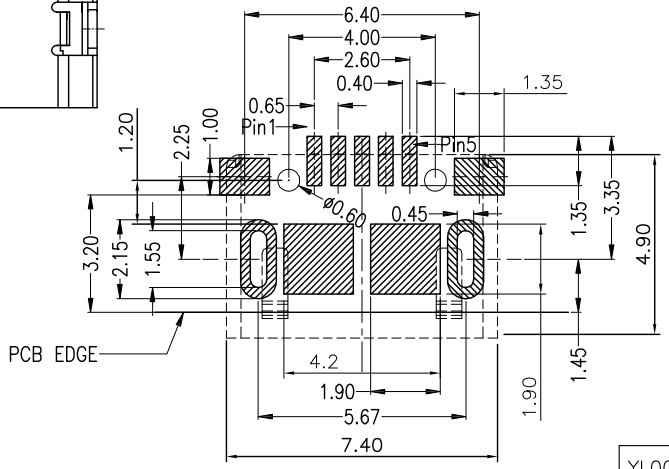

RECOMMANDED PCB LAYOUT PCB图仅供参考

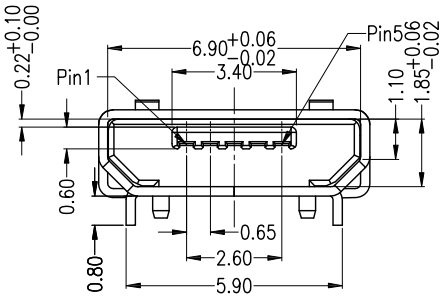

THIS DRAWING IS A CONTROLLED DOCUMENT.	DWN 01Jan2016 A. WU	东莞市宇亮电子有限公司 DONG GUAN YU LIANG ELECTRONICS CO.,LTD	
DIMENSIONS: mm / TOLERANCES UNLESS OTHERWISE SPECIFIED:	CHEK 01Jan2016 S. CHIEN	NAME: Micro usb 5s B Type 有焊脚插板5.9有柱无导位	
0 PLC ± 0.50; 1 PLC ± 0.30; 2 PLC ± 0.20; 3 PLC ± 0.15; 4 PLC ± –	APVD 01Jan2016 Abel		
THIRD ANGLE PROJECTION / ANGLES ± 3°	PRODUCT SPEC —	SIZE A4	DRAWING No. ©=YL001-XXX
	WEIGHT —		
CUSTOMER DRAWING		SCALE 1 : 1	SHEET 1 OF 1

YL001-XXX-XXX

PART NUMBER