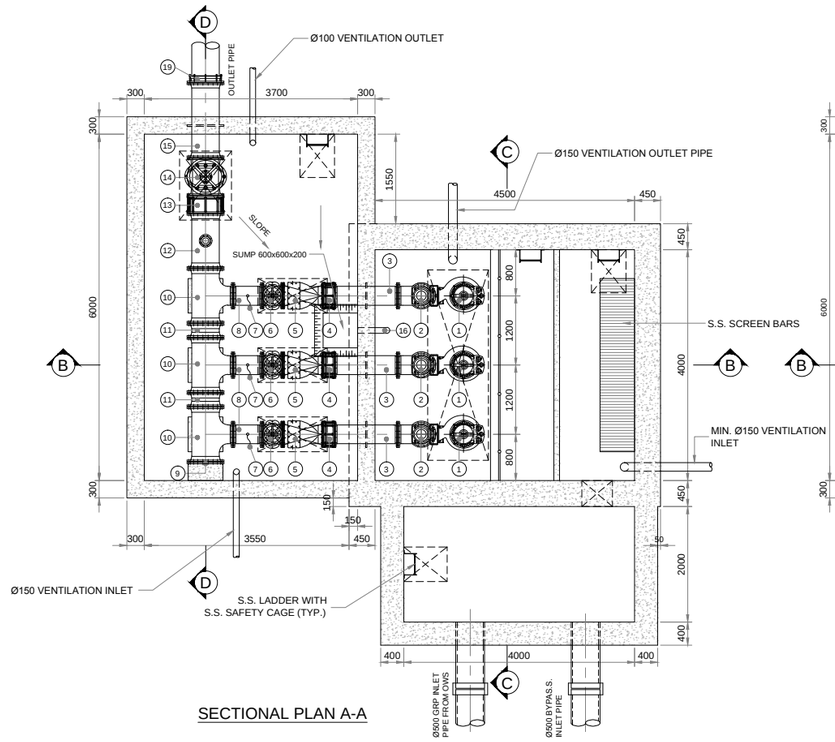

SECTIONAL PLAN A-A

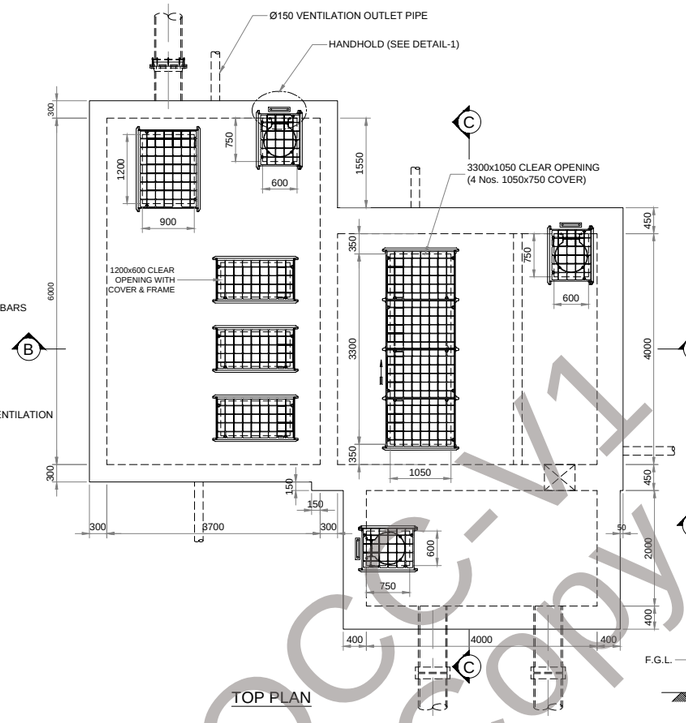

TOP PLAN

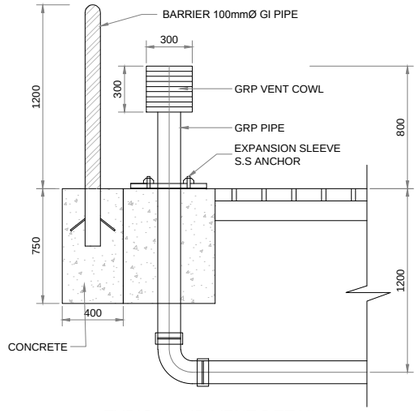

TYPICAL AIR VENT DETAIL

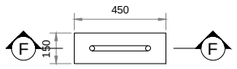

DETAIL-1

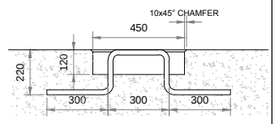

SECTION F-F

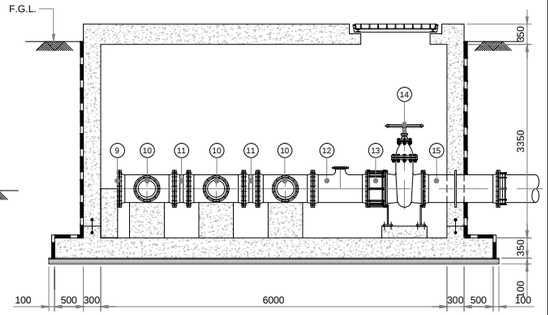

SECTION D-D

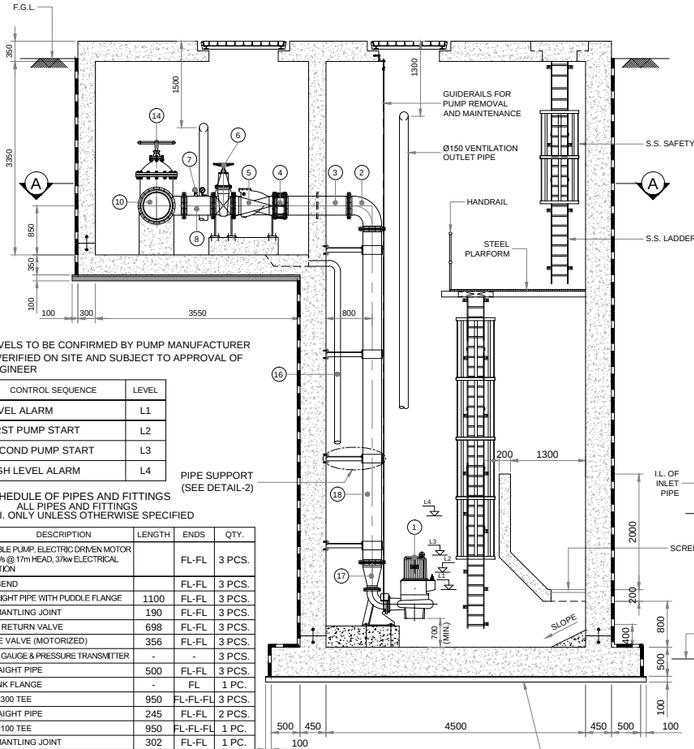

LEVELS TO BE CONFIRMED BY PUMP MANUFACTURER & VERIFIED ON SITE AND SUBJECT TO APPROVAL OF ENGINEER

CONTROL SEQUENCE	LEVEL
LEVEL ALARM	L1
FIRST PUMP START	L2
SECOND PUMP START	L3
HIGH LEVEL ALARM	L4

SCHEDULE OF PIPES AND FITTINGS
ALL PIPES AND FITTINGS
TO BE D.I. ONLY UNLESS OTHERWISE SPECIFIED

NO.	DESCRIPTION	LENGTH	ENDS	QTY.
1	SUBMERSIBLE PUMP, ELECTRIC DRIVEN MOTOR FLOW: 111L/s @ 17m HEAD, 37kw ELECTRICAL COMSUMPTION		FL-FL	3 PCS.
2	Ø300 90° BEND		FL-FL	3 PCS.
3	Ø300 STRAIGHT PIPE WITH PUDDLE FLANGE	1100	FL-FL	3 PCS.
4	Ø300 DISMANTLING JOINT	190	FL-FL	3 PCS.
5	Ø300 NON RETURN VALVE	698	FL-FL	3 PCS.
6	Ø300 GATE VALVE (MOTORIZED)	356	FL-FL	3 PCS.
7	PRESSURE GAUGE & PRESSURE TRANSMITTER	-	-	3 PCS.
8	Ø300 STRAIGHT PIPE	500	FL-FL	3 PCS.
9	Ø450 BLANK FLANGE	-	FL	1 PC.
10	Ø450x450x300 TEE	950	FL-FL-FL	3 PCS.
11	Ø450 STRAIGHT PIPE	245	FL-FL	2 PCS.
12	Ø450x450x100 TEE	950	FL-FL-FL	1 PC.
13	Ø450 DISMANTLING JOINT	302	FL-FL	1 PC.
14	Ø450 GATE VALVE	650	FL-FL	1 PC.
15	Ø450 STRAIGHT PIPE WITH PUDDLE FLANGE	1300	FL-FL	1 PC.
16	Ø100 DRAIN PIPE	-	-	1 PC.
17	Ø300x150 REDUCER	470	FL-FL	3 PCS.
18	Ø300 STRAIGHT PIPE	9460	FL-FL	3 PCS.
19	Ø450 COUPLER	9460	FL-GRP	1 PC.

SECTION B-B

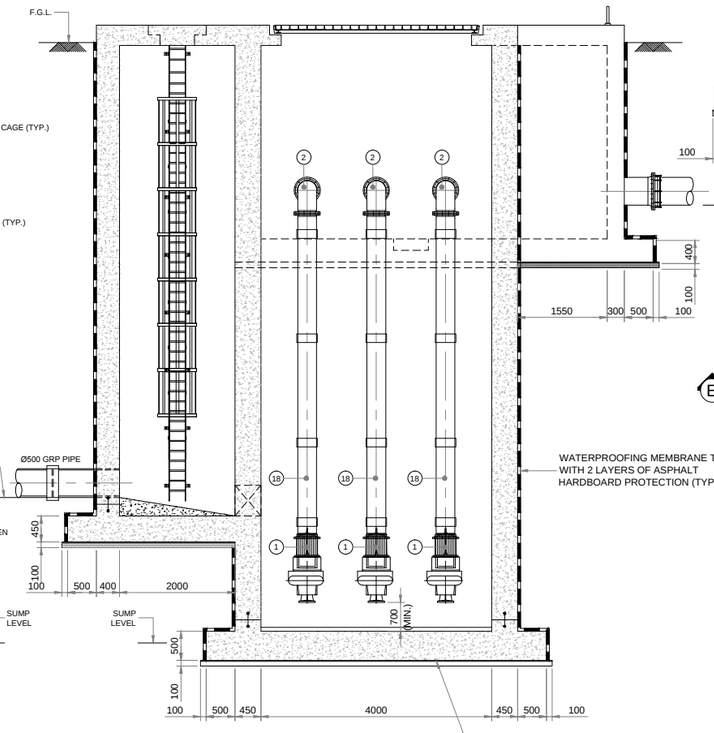

SECTION C-C

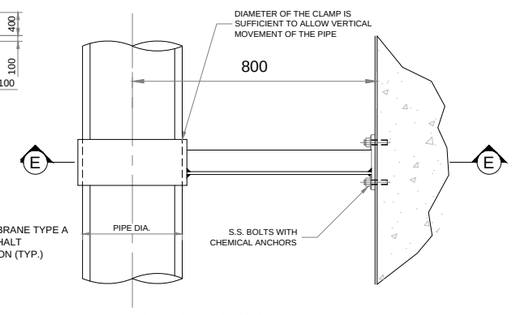

RISER SUPPORT DETAIL-2

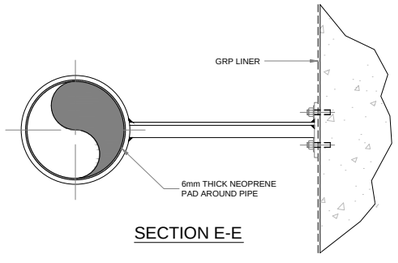

SECTION E-E

QCC-V1 Copy

NOTES:

1. ALL DIMENSIONS ARE IN MILLIMETERS UNLESS INDICATED OTHERWISE.
2. IF THERE IS DISCREPANCY BETWEEN THE REQUIREMENTS IN THE SPECIFICATIONS AND THOSE SHOWN ON THIS DRAWING, THE SPECIFICATIONS SHALL BE FOLLOWED.
3. ALL MATERIALS, FABRICATION AND CONSTRUCTION SHALL BE IN ACCORDANCE WITH THE PROJECT SPECIFICATIONS AND VERIFIED BY THE ENGINEER.
4. DETAILS OF LADDERS, PLATFORMS, HANDRAIL, ETC. SHOP DRAWINGS TO BE PREPARED BY CONTRACTOR AND APPROVED BY ENGINEER.
5. INTERNAL AND EXTERNAL SURFACES ARE TO BE LINED IN ACCORDANCE WITH THE SPECIFICATIONS.
6. PIPE SUPPORT TYPE AND SPACING TO BE VERIFIED BY CONTRACTOR AS PER SPECIFICATION AND TO THE APPROVAL OF ENGINEER.
7. PIPES, VALVES, FITTINGS AND PUMPS SHALL BE MADE OF MATERIAL OF HIGH RESISTIVITY TO CHLORINE AND SALINITY AS PER SPECIFICATION, MANUFACTURER RECOMMENDATION AND APPROVED BY THE ENGINEER.
8. WATER-PROOFING MEMBRANE SHALL BE APPLIED TO THE EXTERIOR SURFACE OF ALL STORM WATER DRAINAGE STRUCTURES PRIOR TO BACKFILLING AS SPECIFIED.
9. WATER-PROOFING MEMBRANE SHALL BE APPLIED UNDER BOTTOM SLAB AS SPECIFIED.
10. ALL DIMENSIONS ARE GIVEN FOR GUIDANCE ONLY, DIMENSIONS SHALL BE MODIFIED ACCORDING TO THE DESIGN FLOW CALCULATIONS AND APPROVED BY THE ENGINEER..
11. THE CAPACITY OF THE PUMP STATION SHOWN IS 0.35 CUM/SEC AND PUMP HEAD IS 17.0 METER. PUMP NUMBERS AND CONFIGURATION MAY VARY ACCORDING TO DESIGN FLOW.
12. SAND TRAP IS PROVIDED THROUGH THE OIL WATER SEPARATOR INSTALLED ON THE UPSTREAM OF THE PUMP STATION. REFER DWG. No. N-237.

LEGEND:

D.I. - DUCTILE IRON
S.S. - STAINLESS STEEL
FL - FLANGE
F.G.L - FINISHED GROUND LEVEL
G.I. - GALVANIZED IRON
GRP - GLASS REINFORCED PLASTIC
I.L. - INVERT LEVEL

REFERENCE DRAWINGS AND DOCUMENTS

No.	REVISIONS	APP'D	DATE

CLIENT

TITLE
STANDARD DRAWINGS
MAIN ROADS

DRAWING TITLE
SURFACE DRAINAGE TYPICAL DETAILS OF PUMP STATION PLANS AND SECTIONS

DRAWN	-	SCALE	N.T.S
CHECKED	-	DATE	-
APPROVED	-	SIZE	A1
PROJECT No.	-	DWG. No.	N-239