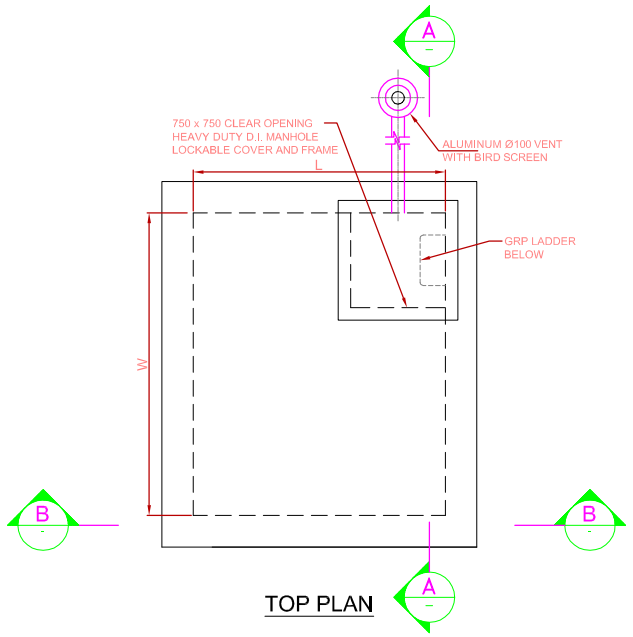

TOP PLAN

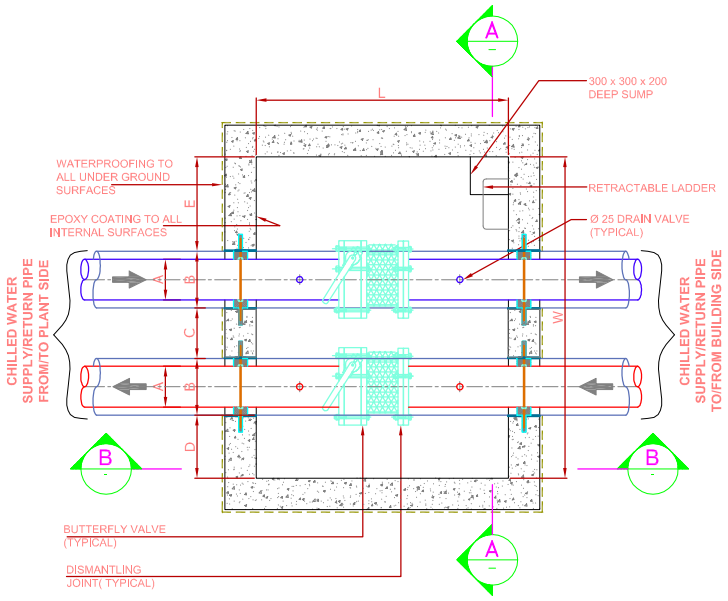

BOTTOM PLAN

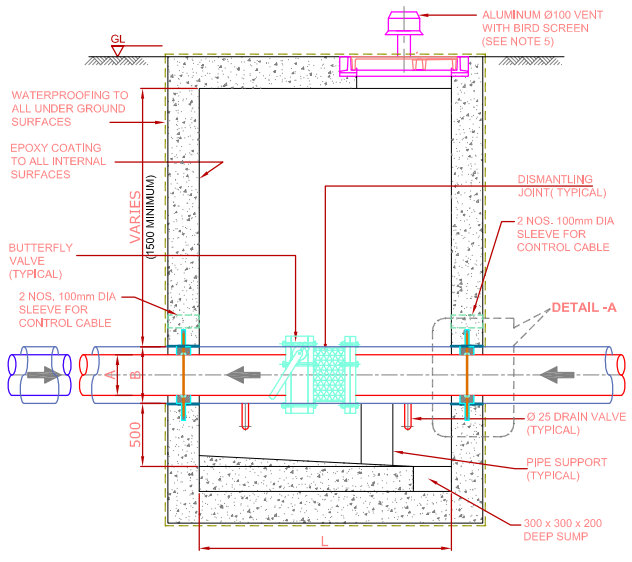

SECTION B

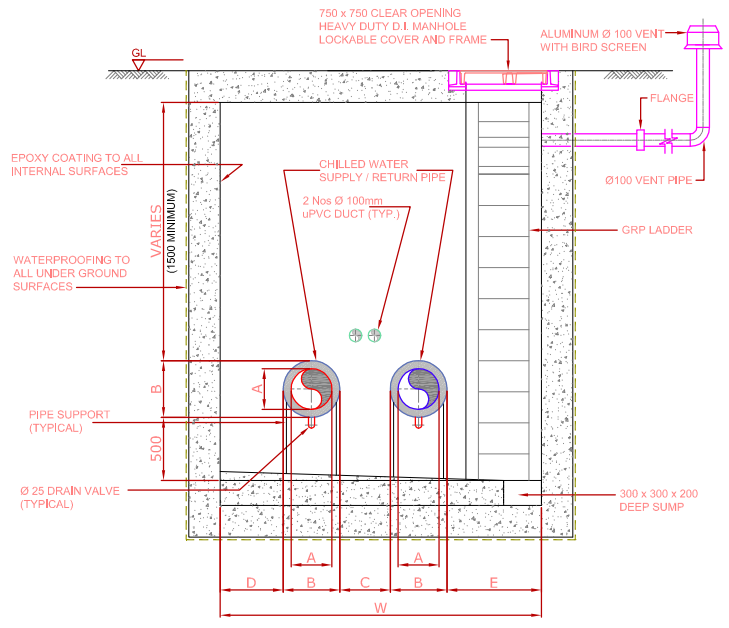

SECTION A

MATERIAL

1. PUDDLE FLANGE A36 M S PLATE
2. HYDRO - EXPANSIVE WATER STOP / WATER BARRIER (SIMILAR TO SERVISTRIP AH 205 - SALINE WATER GRADE)
3. CARBON STEEL CORE PIPE
4. HDPE COVER
5. POLYETHYLENE WELDED JOINT
6. PIPE INSULATION
7. HDPE JACKET

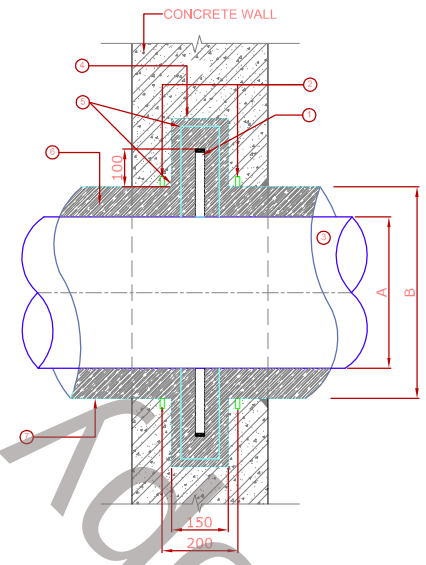

DETAIL - A

TYPICAL PRE - INSULATED PIPE
WALL PENETRATION DETAIL

STEEL CORE PIPE N.D		HDPE JACKET O.D (mm)					
(mm)	(Inch)						
A	A	B	C	D	E	L	W
1200	48	1400	400	500	800	2000	4500
1100	44	1300	400	500	800	2000	4300
1050	42	1250	400	500	800	2000	4200
1000	40	1200	400	500	800	2000	4100
900	36	1100	400	500	800	2000	3900
800	32	1000	400	500	800	2000	3700
750	30	900	400	500	800	2000	3500
600	24	730	400	500	800	2000	3160
500	20	630	400	500	800	2000	2960
450	18	560	400	500	800	2000	2820
400	16	560	400	500	800	2000	2820
350	14	500	400	500	800	2000	2700
300	12	450	300	500	800	2000	2500
250	10	400	300	500	800	2000	2400
200	8	350	300	500	800	2000	2300
150	6	280	300	500	800	2000	2160
125	5	250	300	500	800	2000	2100
100	4	225	300	500	800	2000	2050
80	3	200	300	500	800	2000	2000
65	2½	180	300	500	800	2000	1960
50	2	160	300	500	800	2000	1920
40	1½	140	300	500	800	2000	1880
32	1¼	140	300	500	800	2000	1880
25	1	125	300	500	800	2000	1850

ISOLATION VALVE CHAMBER DIMENSIONS
FOR CARBON STEEL CORE PIPE WITH HDPE JACKET

HDPE CORE PIPE N.D		HDPE JACKET O.D (mm)					
(mm)	(Inch)						
A	A	B	C	D	E	L	W
500	18	630	400	500	800	2000	2960
450	16	650	400	500	800	2000	3000
400	14	560	400	500	800	2000	2820
355	12	500	400	500	800	2000	2700
315	10	450	300	500	800	2000	2500
250	8	400	300	500	800	2000	2400
200	6	315	300	500	800	2000	2230
160	5	280	300	500	800	2000	2160
125	4	250	300	500	800	2000	2100
110	3½	200	300	500	800	2000	2000
90	3	180	300	500	800	2000	1960
75	2½	180	300	500	800	2000	1960
63	2	140	300	500	800	2000	1880
50	1½	140	300	500	800	2000	1880
40	1¼	140	300	500	800	2000	1880
32	1	68	300	500	800	2000	1736
25	¾	68	300	500	800	2000	1736

NOTE : HDPE SDR11-PN16

ISOLATION VALVE CHAMBER DIMENSIONS
FOR HDPE CORE PIPE WITH HDPE JACKET

HDPE CORE PIPE N.D		HDPE JACKET O.D (mm)					
(mm)	(Inch)						
A	A	B	C	D	E	L	W
500	18	730	400	500	800	2000	3160
450	16	630	400	500	800	2000	2960
400	14	560	400	500	800	2000	2820
355	12	500	400	500	800	2000	2700
315	10	450	300	500	800	2000	2500
250	8	400	300	500	800	2000	2400
200	6	315	300	500	800	2000	2230
160	5	280	300	500	800	2000	2160
125	4	250	300	500	800	2000	2100
110							
90							
75							
63							
50							
40							
32							
25							

REFER HDPE SDR11-PN16 TABLE

NOTE : HDPE SDR17-PN10

ISOLATION VALVE CHAMBER DIMENSIONS
FOR HDPE CORE PIPE WITH HDPE JACKET

NOTES:

1. ALL DIMENSIONS AND DIAMETERS ARE IN MILLIMETERS UNLESS OTHERWISE STATED.
2. ALL LEVELS ARE IN METERS UNLESS OTHERWISE STATED.
3. CONTRACTOR SHALL FINALIZE THE LOCATION AND NUMBER OF DUCT SLEEVES IN ACCORDANCE WITH THE APPROVED CONTROL SYSTEM.
4. CONTRACTOR TO VERIFY ALL DIMENSIONS AS PER EQUIPMENT TO BE APPROVED.
5. ALL PIPEWORK SHALL BE THERMALLY INSULATED AS PER TABREED SPECIFICATIONS.
6. ALL VENTS SHALL BE LOCATED NEAR THE GREEN AREA OR NEXT TO THE NEAREST BUILDING WALL. IF BUILDING IS NOT CONSTRUCTED VENT WILL BE PROVIDED UP TO THE FLANGE WHICH SHALL BE LEFT BLANKED-OFF FOR FUTURE EXTENSION OF THE VENT LINE.

LEGEND :

BFV	BUTTERFLY VALVE
DJ	DISMANTLING JOINT
DC	DRAIN COKE
AAV	AUTOMATIC AIR VENT
B.V.P	BUILDING VALVE PIT
IL	INVERT LEVEL
FGL	FINISHED GRADE LEVEL

Rev. No.	Date	Description	Drwn.	Chkd.	Aprd.

Scheme:

Project:

Client:

Designed, Built & Owned By:

tabreed
NATIONAL CENTRAL COOLING CO. (PJSC)
P.O. BOX 29478 ABU DHABI, TEL. : 971 2 6455007 FAX. : 971 2 6455008
P.O. BOX 32444 DUBAI, TEL. : 971 4 3404422 FAX. : 971 4 3404420
E-mail : GMail@tabreed.co.ae

Designed	Ismail A. S	Drawing Title: ISOLATION VALVE CHAMBER PLAN AND DETAILS		
Drawn	Sibi Alex			
Checked	Ismail A. S			
Approved	Ismail A. S			
Scale	No Scale	Drawing Number	Sheet	Rev.
Date	12/07/2012	Tab/TSD/02	1 OF 1	0

IFC-V1

SHEET SIZE = 811 x 564 mm

PLOTTING SCALE 1 : 1