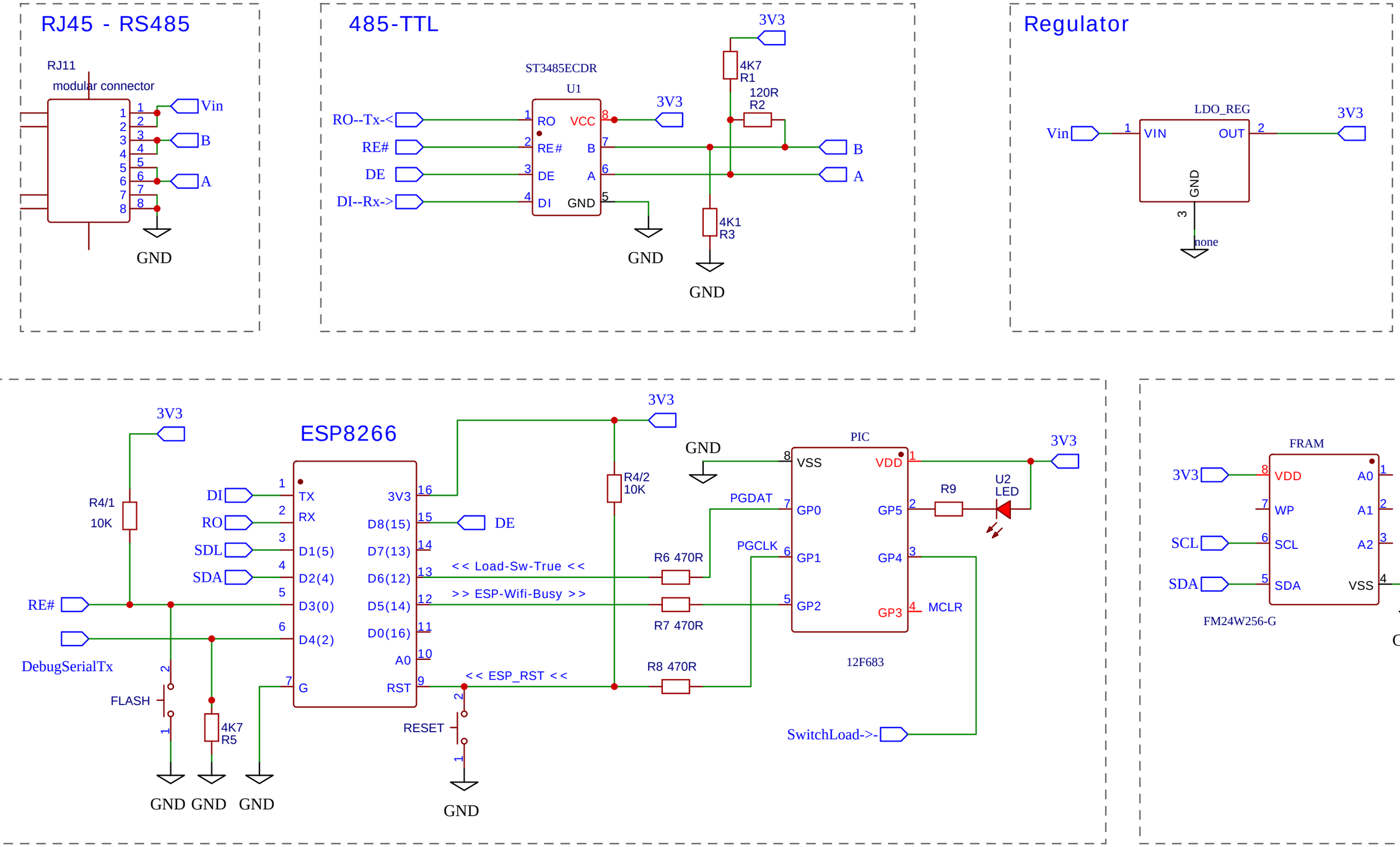

Powersave: ESP runs once to log load and solar power: reset every 40 seconds by 12F683
Epever RTC used hourly to save watt/hour figures to FRAM
If load state toggled - ESP+wifi+GUI powered for 10 mins (use Epever RTC)
12F683 IOC from external switch 'ToggleLoad' > flag on D6 > ESP reset

ESP12F prototype board https://www.ebay.co.uk/itm/143938743355?var=443204923926
ST3845 3V3 CPC order code SC19282

TITLE: EPEVER-ESP8266-12F683 Datalogger		REV: 1.1
EasyEDA	Company: HomeStudio	Sheet: 1/1
	Date: 2023-12-28 Drawn By: Aidan Hedley	

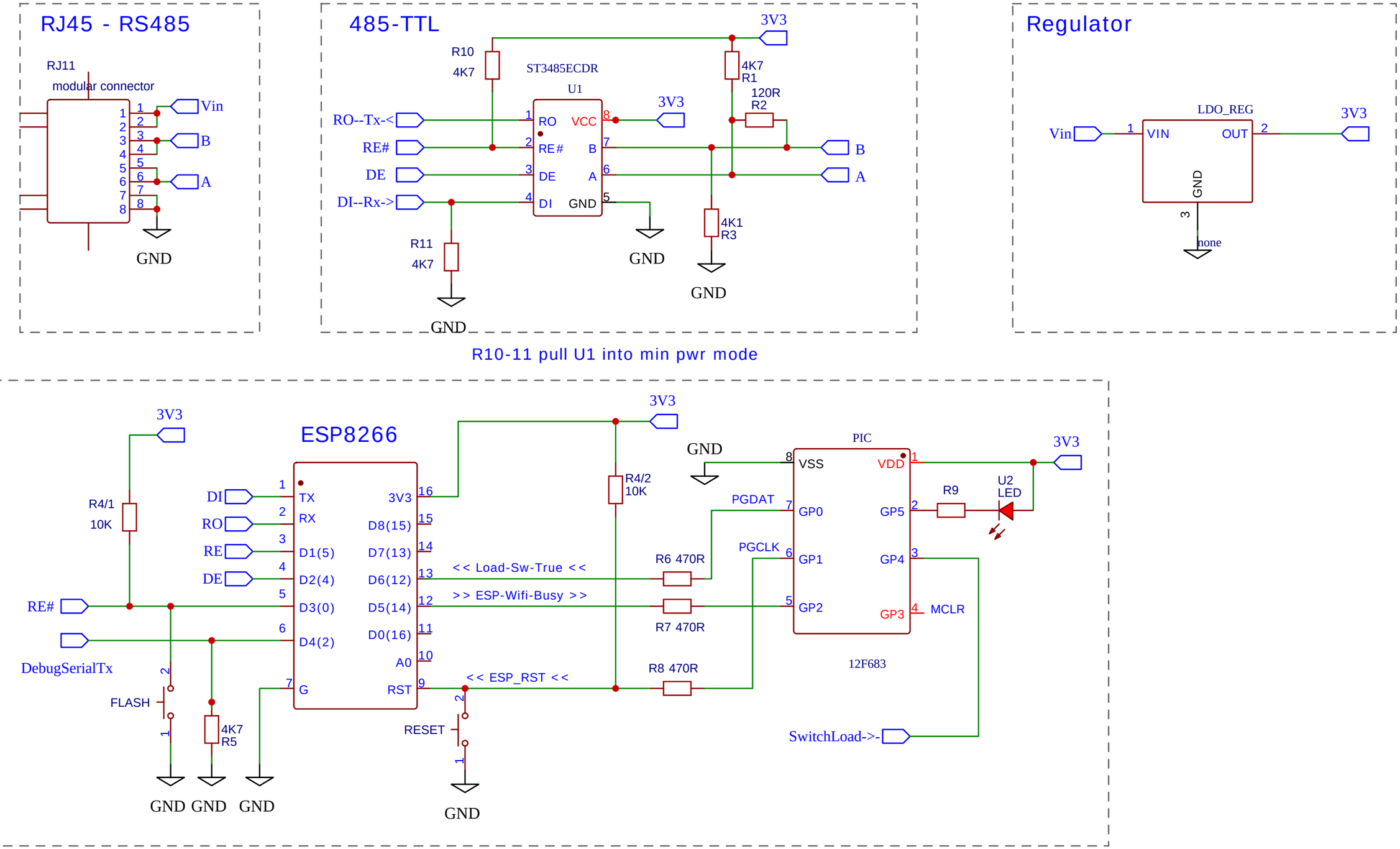

Powersave: ESP runs once to log load and solar power: reset every 40 seconds by 12F683
Epever RTC used hourly to save watt/hour figures to RTC MEM - 3 days 4K EEPROM - 512 days data
If load state toggled - ESP+wifi+GUI powered for 10 mins (use Epever RTC)
12F683 IOC from external switch 'ToggleLoad' > flag on D6 > ESP reset

ESP12F prototype board https://www.ebay.co.uk/itm/143938743355?var=443204923926
ST3845 3V3 CPC order code SC19282

TITLE: EPEVER-ESP8266-12F683 EEPROMlogger	REV: 1.1
EasyEDA Company: HomeStudio	Sheet: 1/1
Date: 2023-12-28 Drawn By: Aidan Hedley	