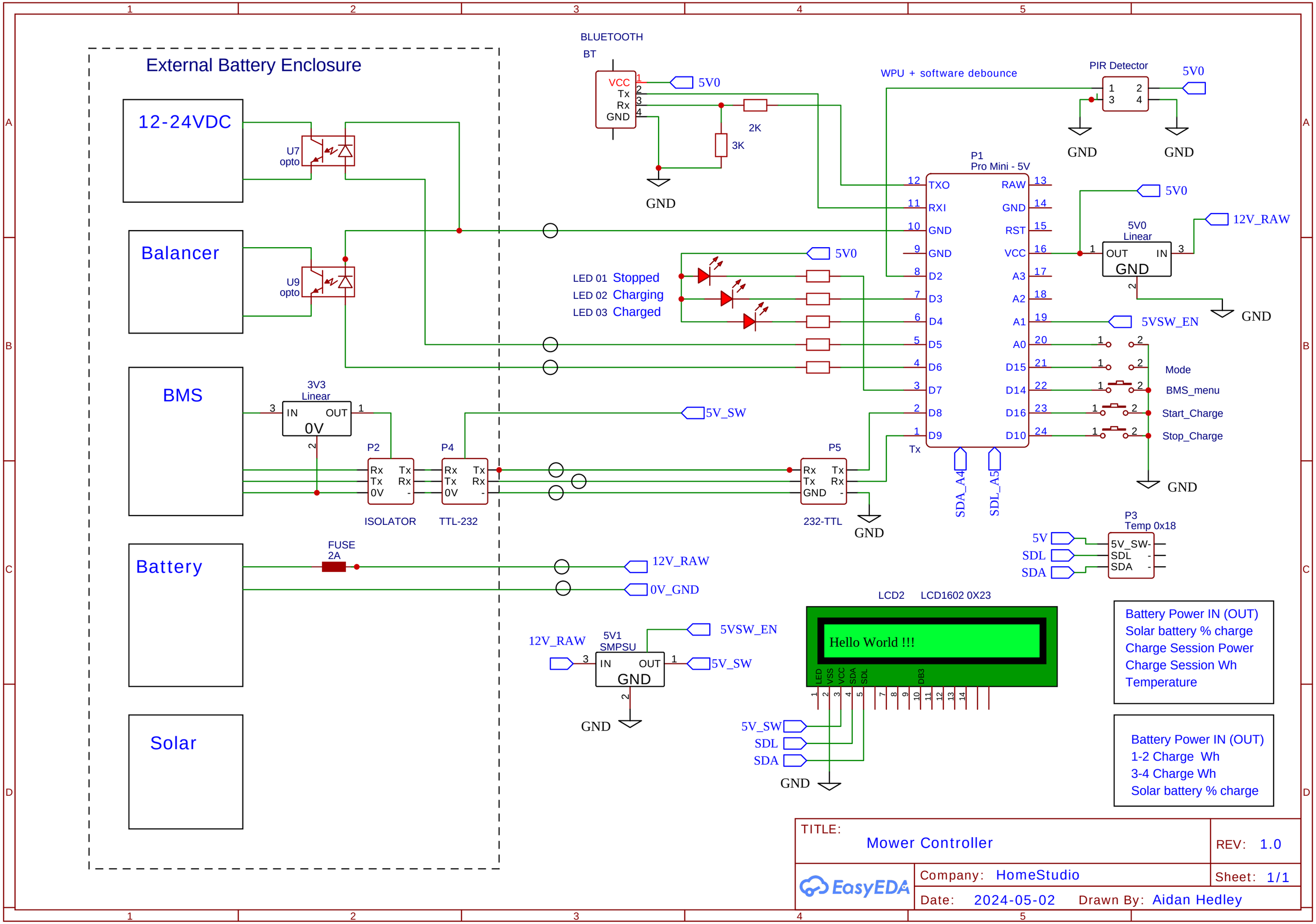
External Battery Enclosure
12-24VDC
Balancer
BMS
Battery
Solar
U7
opto
U9
opto
3V3
Linear
IN
OUT
0V
P2
P4
P5
Rx
Tx
0V
GND
ISOLATOR
TTL-232
232-TTL
FUSE
2A
12V_RAW
0V_GND
5V_SW
BLUETOOTH
BT
VCC
Tx
Rx
GND
5V0
2K
3K
GND
WPU + software debounce
PIR Detector
P1
Pro Mini - 5V
TXO
RXI
GND
D2
D3
D4
D5
D6
D7
D8
D9
RAW
RST
VCC
A3
A2
A1
A0
D15
D14
D16
D10
5V0
Linear
OUT
IN
12V_RAW
5VSW_EN
Mode
BMS_menu
Start_Charge
Stop_Charge
SDA_A4
SDL_A5
Tx
LED 01 Stopped
LED 02 Charging
LED 03 Charged
P3
Temp 0x18
5V
SDL
SDA
5V_SW-
12V_RAW
5V1
SMPSU
5VSW_EN
LCD2
LCD1602 0X23
Hello World !!!
LED
VSS
VCC
SDA
SDL
DB3
Battery Power IN (OUT)
Solar battery % charge
Charge Session Power
Charge Session Wh
Temperature
Battery Power IN (OUT)
1-2 Charge Wh
3-4 Charge Wh
Solar battery % charge
TITLE:
Mower Controller
REV: 1.0
Company: HomeStudio
Sheet: 1/1
Date: 2024-05-02
Drawn By: Aidan Hedley
EasyEDA