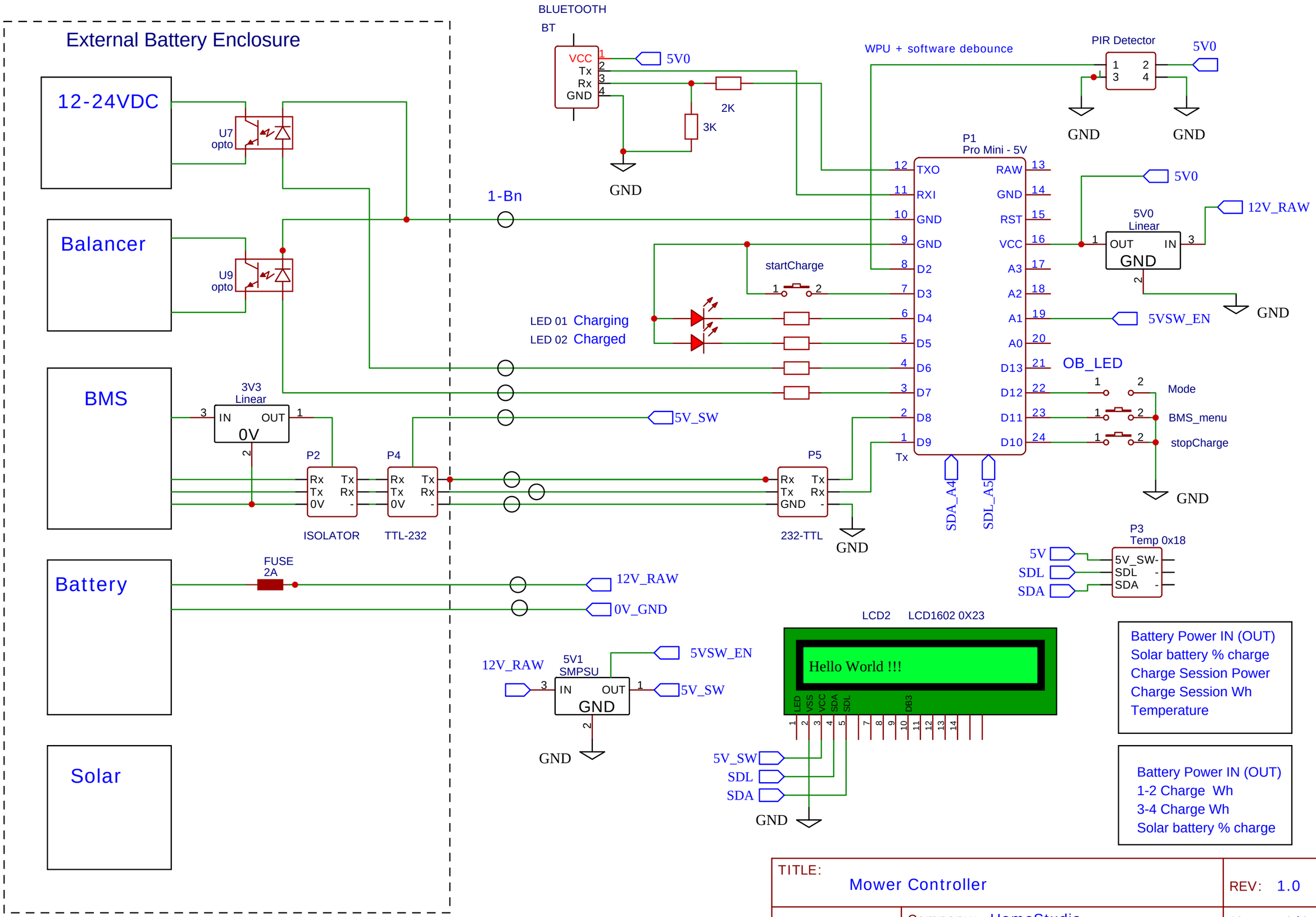

TITLE: Mower Controller	REV: 1.0
EasyEDA	Company: HomeStudio — Sheet: 1/1
	Date: 2024-05-02 — Drawn By: Aidan Hedley