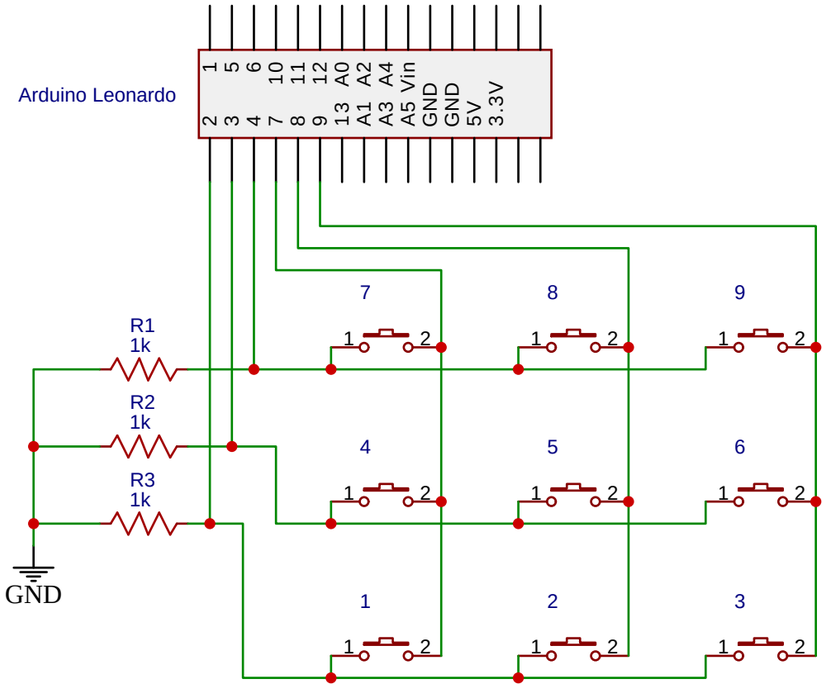

TITLE: Test keypad shematic		REV: 1.0
	Company: Eco-Clicks	Sheet: 1/1
	Date: 18/03/2021 Drawn By:	