Cellular IoT Cloud Connectivity: End-to-End Application Development

Shashank Hegde
Chair of Embedded Systems and IoT
Technical University of Munich
Munich, Germany
shashank.hegde@tum.de

***Abstract*—This report outlines the development of an end-to-end IoT application using the Adrastea-1 cellular module and the Würth Elektronik Sensor FeatherWing. The Adrastea-1 module, based on the Sony Altair ALT1250 chipset, integrates LTE-M/NB-IoT, GNSS, and an ARM Cortex-M4 processor, providing a platform for custom applications. The Sensor FeatherWing, compatible with Adafruit Feather, features temperature, humidity, acceleration, and pressure sensors connected via I2C to the M4 processor.**

The internship focused on designing a plug-and-play system, enabling seamless communication between the Sensor Featherwings and Adrastea-1, which would transmit the data to the cloud in either a secure mode via digital certificates or via a non-secure mode. Firmware development in Embedded C and FreeRTOS covered I2C and UART functionalities. Both LTE-CAT-M and NB-IoT modes were explored, with insights into the current profile over time.

Practical application included a Caterpillar detection project, demonstrating the system's versatility. An Arduino Nicla Vision Module captured images, with an ML model trained to recognize caterpillars, transmitting data via the Thyone radio module to Adrastea-1, which communicated with the cloud over MQTT.

The report contributes insights into cellular IoT module utilization, sensor integration, and real-world applications.

Keywords— LTE-M/NB-IoT, Embedded C, FreeRTOS, Cloud, MQTT.

I. Introduction

The rapid evolution of IoT technologies has spurred advancements in cellular modules, providing versatile solutions for diverse applications. According to recent statistics, the number of connected IoT devices has surged to over 15 billion [1], showcasing the pervasiveness of sensor-driven technologies across industries. The cellular IoT Market is on track to reach a value of $27.37 billion by the end of 2033, with a strong compound annual growth rate (CAGR) of 49.16% expected between 2023 and 2033. With an estimated 30 billion connected devices projected by 2030 [2], the scale of IoT's impact continues to escalate, with the demand for reliable and scalable connectivity solutions intensifying, with the vital requirement for efficient data handling mechanisms, emphasizing the significance of robust communication protocols and secure cloud storage in IoT ecosystems. This project emerged as a response to this critical need, focusing on the meticulous integration and development of an end-to-end secure IoT system. Transmitting and storing IoT sensor data necessitates a secure and efficient infrastructure to handle the vast and diverse information generated by sensors. This project focused on the integration and development of an end-to-end secure IoT system using the Adrastea-1 cellular module, connected to the Würth Elektronik Sensor FeatherWing. This facilitated the transmission of sensor data securely with digital certificates to Azure IoT Central Cloud platform, or non-securely to the HiveMQ MQTT broker platform through cellular technology.

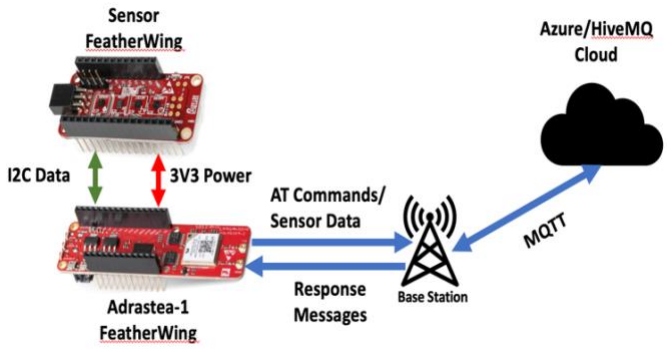

Fig. 1: Overview of the plug and play system architecture

The Adrastea FeatherWing can either be powered through USB, or through an external LiPo battery. The Sensor FeatherWing can conveniently be stacked on top of the Adrastea FeatherWing and send data over I2C or optionally SPI, and be powered via Adrastea. This modular, stackable architecture not only conserves space but also streamlines the integration of multiple functionalities easily onto the system. The Adrastea module employs specific AT Commands to establish a connection with the base station. These commands initiate the process of connecting to the cloud and publishing data using the MQTT protocol. An external LTE antenna is connected through a UMRF connector for signal reception from the LTE network. An IoT SIM card with NB-IoT and LTE-M capabilities is inserted into the module and registered onto the network with the appropriate AT commands, after which connection to the base station and the internet is achievable.

Exploring both LTE CAT-M and NB-IoT modes, the report provides an analysis of the current profile over time and latency characteristics, which are essential for optimizing the system's performance. Furthermore, the system's practical application in a caterpillar detection project showcased the

adaptability to real-world scenarios, employing machine learning for data transmission to the cloud.

II. Components of the System

A. Adrastea-1

The Adrastea-1 module, leveraging the Sony Altair ALT1250 modem chipset, offers a compact LTE-M/NB-IoT cellular solution with GNSS capabilities and an ARM Cortex-M4 processor, providing a platform for customized applications. The ARM Cortex-M4 processor is exclusively for user application software, and it offers 1 MB of flash and 256 kB of RAM dedicated to this use.

The Adrastea module has an internal UART interface between the M4 core and the modem, which we utilize to send sensor data from the core, and receive data response messages from the modem. External UART is used to send optional commands and messages between a host PC and the MCU.

B. Sensor FeatherWing

The Würth Elektronik eiSos Sensor FeatherWing is a sensor development board fully compatible with the popular Adafruit Feather line of development boards. All four sensors are connected over the shared I2C bus.

- Temperature sensor with the TIDS sensor
- Humidity sensor with the HIDS sensor
- 3-axis acceleration sensor with the ITDS sensor
- Absolute pressure sensor with the PADS sensor

C. Azure IoT Central

IoT Central is an IoT application platform as a service, that reduces the burden and cost of developing, managing, and maintaining IoT solutions. The web UI lets the user quickly connect devices, monitor device conditions, create rules, and manage devices and their data throughout their life cycle.
The IoT Hub Device Provisioning Service (DPS) is a helper service for IoT Hub that enables zero-touch provisioning to the right IoT hub without requiring human intervention and authenticates the device through X.509 Certificates generated by the WE Certificate Generator. This tool generates root certificates, device certificates, and device private keys which are required to connect securely to the platform. The root certificate is uploaded to IoT Central, and the above-mentioned 3 generated certificates are also uploaded onto Adrastea's memory. When Adrastea tries to connect to IoT Central, it first connects to the DPS, which authenticates the device and assigns the address of IoT Hub to the next connection. This address is saved and connected to securely start exchanging data to the platform. A few important parameters while setting up the system are:

- Device ID - It is the name of the device as it appears in the IoT central Application. It needs to be unique per device. In this work, the name "adrastea-test-dev-1" is used.
- Scope ID: It is unique per application but common across devices, and generated while creating the device connection group on IoT Central.
- Model ID: Device models define the specific devices with the model ID being sent by the IoT Hub to find the device model which includes its properties, telemetries, and components.

D. MQTT Protocol

The MQTT (Message Queuing Telemetry Transport) protocol is a lightweight, efficient messaging protocol designed for sending small packets of data in real-time across unreliable networks. Particularly well-suited for Internet of Things (IoT) applications, MQTT follows a publish-subscribe model, where devices, or "clients," publish messages to specific topics and subscribe to receive messages on those topics. In the context of Azure IoT Central Cloud, MQTT serves as a robust communication protocol for transmitting small data packets seamlessly. The Adrastea-1 module served as an MQTT client publishing the sensor data periodically and subscribing for any requests, with either a smartphone MQTT application or the IoT Central Dashboard application serving as the client at the other end. The protocol's efficiency, low overhead, and support for intermittent connectivity make it an ideal choice for IoT scenarios, enabling the reliable and scalable transmission of small data payloads to and from Azure IoT Central services.

E. FreeRTOS

RTOS are operating systems that enable embedded controllers and processors to run large-scale embedded applications in a sorted manner such that multiple tasks are executed simultaneously on a single core. FreeRTOS is a real-time scheduler written in C programming language with a minimum-size kernel that makes it suitable for microcontrollers. FreeRTOS is available for more than 40 architectures, including ARM. An application program under RTOS is written as a collection of independent tasks; a thread of execution is such a task. An RTOS provides user-defined process priorities management with each task assigned a priority. In the project, FreeRTOS was used to create 2 separate tasks, one for continuously listening, buffering, and printing the response messages from the base station and the other for fetching and publishing the sensor data periodically.

F. I2C

In this project, the I2C (Inter-Integrated Circuit) protocol plays a pivotal role in facilitating seamless communication between the Adrastea cellular module and the Sensor

FeatherWing components. I2C is a widely used serial communication protocol that allows multiple devices to communicate over a shared bus, utilizing two wires for data transmission: a data line (SDA) and a clock line (SCL). The I2C protocol enables the Adrastea module, functioning as the master device, to initiate communication with the Sensor FeatherWings, acting as slave devices. Through I2C, Adrastea can request sensor readings, configure settings, and receive data from the sensors on the FeatherWings.

G. Digital Certificates

Device Root Certificate is the root of trust for all devices. The device root certificate is used to generate leaf certificates. Each device has a unique leaf certificate that identifies the device. The root certificate can be generated once and used for generating leaf certificates for several devices.
Device Certificate is the unique certificate to securely connect to the IoT central application. Each device certificate generated is exclusively linked to the device through the Device ID and cannot be used on any other device. Device Private Key is the private key corresponding to the public key in the device certificate and is also uniquely linked to a Device ID. In an X.509 certificate, the device certificate ensures safety through the use of asymmetric cryptography. The certificate includes a public key, and its corresponding private key is securely held on the device. The unique linkage between the certificate and the device is established through the Device ID. This cryptographic pairing ensures that only the device possessing the matching private key can use the corresponding public key in the certificate to authenticate itself.

H. CAT-M/NB-IoT Mode

CAT-M (Category M) and NB-IoT (Narrowband Internet of Things) modes represent two distinct radio access technologies designed for efficient and low-power communication in IoT applications. LTE CAT-M is part of the LTE-M (Long-Term Evolution for Machines) technology, offering a balance between data rates and power consumption. It is well-suited for applications that require moderate data transmission capabilities with extended battery life. NB-IoT is specifically tailored for scenarios demanding ultra-low power consumption and cost-effective deployment. NB-IoT excels in applications with sporadic data transmission requirements, providing an optimal solution for widespread, low-complexity IoT deployments. The maximum specified data rate for LTE-CAT-M has a downlink of 300Kbps and an uplink of 375 Kbps, with NB-IoT having a downlink of 27.2 Kbps and an uplink of 62.5 Kbps. Both CAT-M and NB-IoT modes supported by the ALT1250 module showcase their versatility in addressing diverse IoT use cases with varying connectivity and power consumption needs.

III. METHODOLOGY

The system is designed from an end-to-end point of view, with a plug-and-play model, so we would only need to power up the device, after which it automatically connects to the cloud and starts publishing data.

The U-Boot is opened and halted for a few seconds as soon as the device is powered up. U-Boot is an open-source boot loader used in embedded devices to perform various low-level hardware initialization tasks and boot the device's operating system kernel. U-Boot is set with a definite amount of boot delay, which is the amount of time in seconds that the bootloader waits before automatically proceeding with the default boot process. After this step, UART and I2C are initialized. The I2C bus retrieves the unique ID of each of the four sensors on the Sensor FeatherWing. If all the I2C sensor IDs are extracted and verified, the case is returned as "pass", or else it is considered failed, which means that the I2C bus might not have been appropriately placed or the sensors might not be functional.

Using FreeRTOS for UART initialization, a dedicated task, Rx_UART_Task, is established to manage incoming response messages from the modem to the MCU, as shown in Figure 2. Parallelly, a separate task called Start_Sensor_Task will continue the further steps. Network and Internet verification are done with specific AT Commands to ensure that the device is connected to the base station and the Internet. The device then checks if it contains any configuration JSON file with the IoT Central Connection Parameters, like Device_ID, model_ID, etc. If it does, it considers these parameters, else a provision is created to input the parameters through a host PC, with the connection setup as shown in Figure 4. The required certificates are also checked and written into Adrastea's memory. The device will wait for a specific timeout, during which the user can enter the IoT Central connection parameters. If no input is received within the timeout duration, the process automatically exits and continues with the next steps. With these inputs, Adrastea will be ready for provisioning.

The device provisioning process involves first connecting to the DPS and then passing the identifying information to prove its identity. The DPS validates the device identity through a standard X.509 verification and registers the device with an IoT Hub if valid. The IoT Hub will then return the device ID information to the DPS, which is forwarded to the device. At this phase, the device is provisioned. The device can then directly start publishing data onto the IoT Hub. The Adrastea device then requests the sensor values of the Sensor FeatherWings periodically over the I2C bus and stores and publishes the data to IoT Central over the secure connection

established, with the results shown in Figure 7.

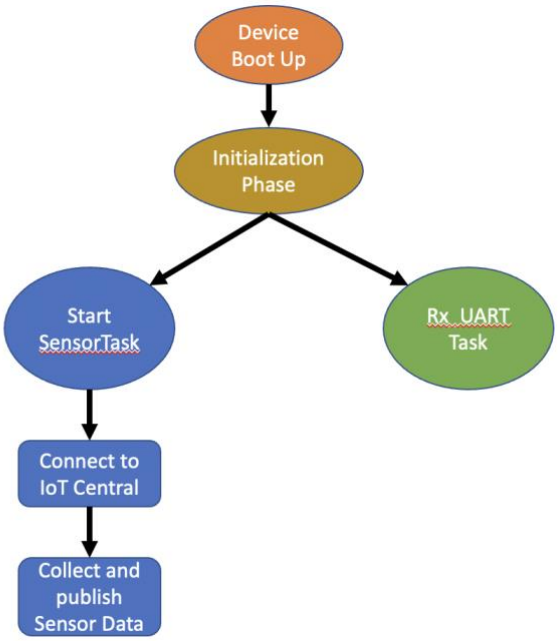

Fig. 2: Processes involved in the system

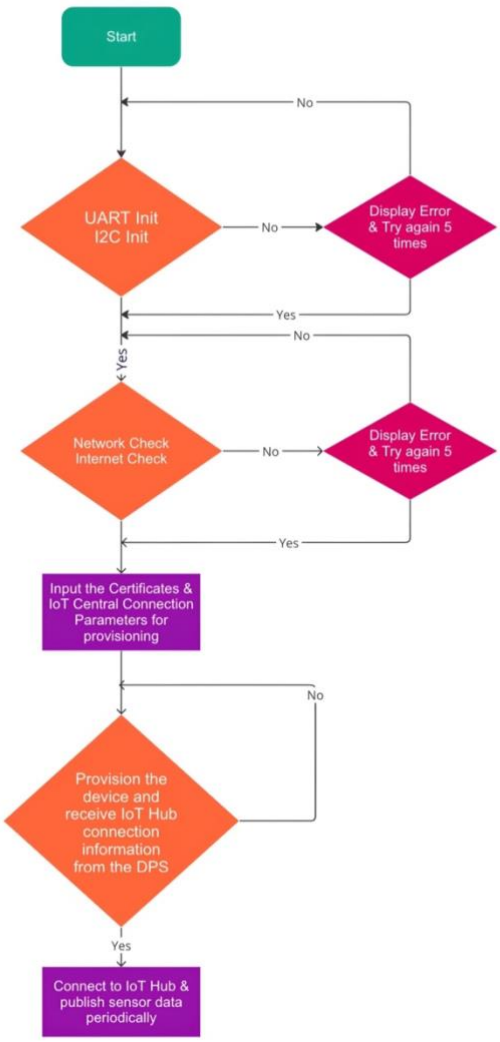

Fig. 3: Flowchart of the system flow

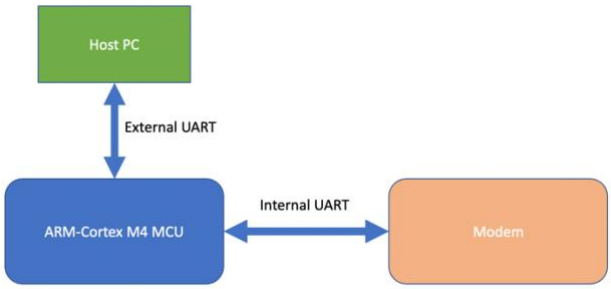

Fig. 4: UART Communication Interface

IV. Use Cases

The implementation of a caterpillar detection system leveraging the Adrastea-1 cellular module was carried out with a thorough approach. An Arduino Nicla Vision Module was employed to capture images with a machine learning (ML) model utilized for caterpillar recognition. The recognized data was then transmitted through the Thyone radio module to the Adrastea-1 cellular module. Subsequently, the Adrastea-1 module established communication with the cloud using the MQTT protocol. The data exchange was visualized through an MQTT client application, as illustrated in Figure 6.

As seen in Figure 5, on the transmitter side, the Arduino Nicla Vision Module interfaced with the Thyone radio module. Upon the detection of a caterpillar, the Arduino Nicla initiated the transmission of the string "Caterpillar detected!" to the Thyone module through UART. The Thyone radio module, operating in transparent mode, then transmitted this data to the receiver system. The receiver system incorporated a separate Thyone module connected to an Adrastea module via UART (externally connected UART to Adrastea). The received data was processed by Adrastea and forwarded over UART to the Adrastea module, which subsequently sent the information to the cloud via MQTT. This data was visualized through an MQTT client application, providing a comprehensive overview of the caterpillar detection system's data transmission process.

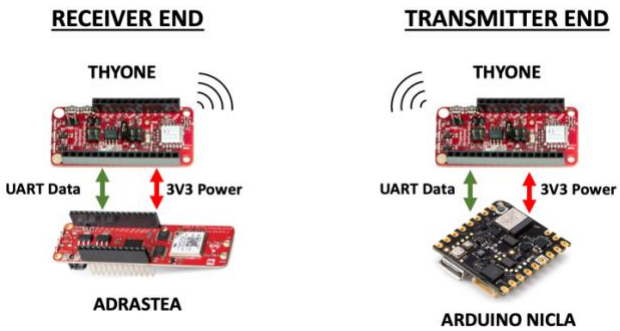

Fig. 5: System Components view of the application

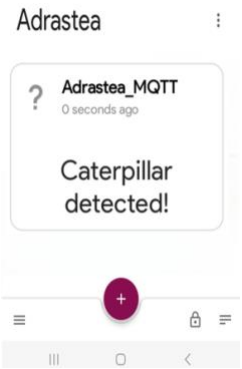

Fig. 6: MQTT Client application view of the message published

The MQTT client was subscribed to a specific topic of the public broker to which Adrastea (publisher) was publishing the data.

V. RESULTS

With the system design from Figure 1, the sensor data was successfully extracted and published in both NB-IoT and CAT-M modes. The sensor data was conveniently and quickly updated on the cloud with less delay observed in NB-IoT mode.

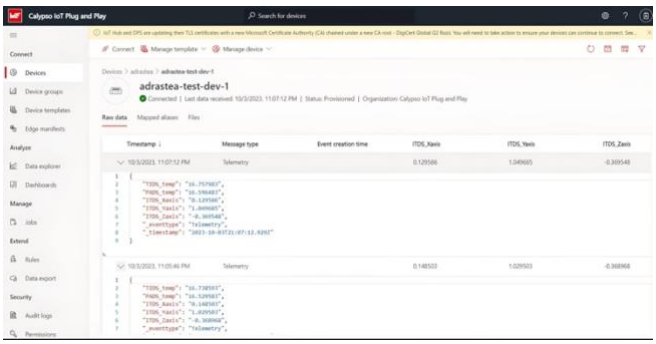

Fig. 7: Snippet of IoT Central Dashboard with published Sensor FeatherWing Data

NB-IoT and CAT-M modes were switched with specific AT commands to analyse the current profiles in these modes. For both cases, data with a length of 78 bytes was published and average current and peak current were checked over a period of 1 hour. As seen in Figure 8 and Figure 9, the device was tested in both CAT-M and NB-IoT modes. Adrastea was connected via the external UART and USB port to the host PC, where the AT Commands sent via the MCU to the modem can be seen. During the entire process of establishing a connection to the cloud and publishing data, the current profile was analysed and it was observed that CAT-M had a reduced peak and average current for the process, as described in Table 1, measured over the entire process of booting up the device to establishing a connection to IoT Central and publishing data periodically.

In this scenario, when transmitting a string of length 78 over MQTT, several factors may contribute to the observed differences in average current between NB-IoT and CAT-M:

- Data Rate and Transmission Time: NB-IoT is designed for lower data rates, and it may require longer transmission times to send the same amount of data compared to CAT-M. This longer transmission time can contribute to higher average current consumption. CAT-M, with its support for higher data rates, might be able to transmit the data more quickly, potentially resulting in lower average current consumption for the same payload.
- Radio Resource Control (RRC) States: The devices might enter different RRC states like Idle, Connected, Inactive, etc. during communication, and the transition between these states can impact power consumption.
- Network Quality: The quality of the network connection can affect power consumption. If the NB-IoT network has higher latency or less reliable connectivity, it might require more retries or prolonged active states, contributing to higher power consumption.

These are the possibilities for why the module experienced a higher power consumption for NB-IoT than CAT-M.

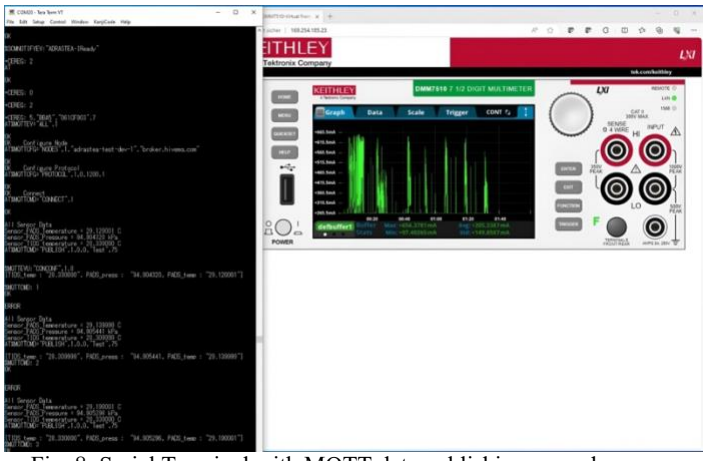

Fig. 8: Serial Terminal with MQTT data publishing procedure (left) & CAT-M current profile over time (right)

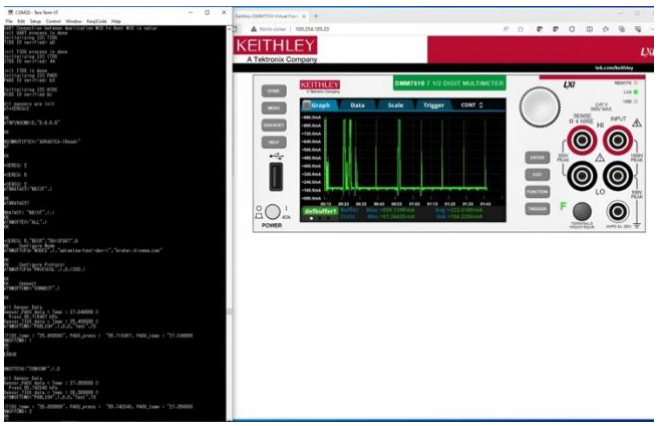

Fig. 9: Serial Terminal with MQTT data publishing procedure (left) & NB-IoT current profile over time (right)

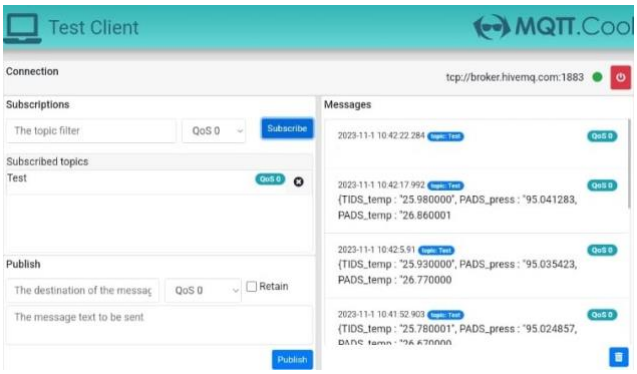

Fig. 10: Published Sensor MQTT data received on client device

Radio Technology	Peak Current (mA)	Avg. Current (mA)
CAT-M	656.38	205.34
NB-IoT	859.14	222.62

Table 1: Comparison of current profile values for CAT-M and NB-IoT

REFERENCES

[1] https://iot-analytics.com/number-connected-iot-device

[2] https://explodingtopics.com/blog/number-of-iot-devices

[3] https://learn.microsoft.com/en-us/azure/iot-central/core/overview-iot-central

[4] https://www.we-online.com/en/components/products/SENSOR_FEATHERWING

[5] https://www.we-online.com/en/products/components/service/wireless-connectivity-sensors?#i8117

[6] https://www.we-online.com/en/components/products/ADRASTEA-I

[7] Basu, Subho & Sultania, Ashish & Famaey, Jeroen & Hoebeke, Jeroen. (2019). Experimental Performance Evaluation of NB-IoT. 1-6. 10.1109/WiMOB.2019.8923221.

[8] Dawaliby, Samir & Bradai, A.. (2016). In depth performance evaluation of LTE-M for M2M communications. 10.1109/WiMOB.2016.7763264.

[9] LPWAN Technologies for IoT and M2M Applications, Bharat S. Chaudhari and Marco Zennaro

[10] https://altair.sony-semicon.com/products/alt1250/